AD-A083 488 LOCKHEED-CALIFORNIA CO BURBANK F/G 15/5
BUILT-IN-TEST AND EXTERNAL TESTER RELIABILITY CHARACTERISTICS.(U)
MAR 80 D E TUTTLE, R LOVELESS F30602-78-C-0157
UNCLASSIFIED LR-29052 RADC -TR-80-32 NL

1 OF 2
AD
A083488

RADC-TR-80-32
Final Technical Report
March 1980

12

ADA083488

BUILT-IN-TEST AND EXTERNAL TESTER RELIABILITY CHARACTERISTICS

LEVEL II

Lockheed California Company

Donald E. Tuttle
Richard Loveless

APPROVED FOR PUBLIC RELEASE; DISTRIBUTION UNLIMITED

DTIC
ELECTE
APR 28 1980
S D
E

ROME AIR DEVELOPMENT CENTER
Air Force Systems Command
Griffiss Air Force Base, New York 13441

DDC FILE COPY

80 4 25 012

This report has been reviewed by the RADC Public Affairs Office [illegible] is releasable to the National Technical Information Service (NTIS). [illegible] it will be releasable to the general public, including foreign nations.

RADC-TR-80-32 has been reviewed and is approved for publication.

APPROVED:

DANIEL GLEASON, 1LT, USAF
Project Engineer

APPROVED: David C. Luke

DAVID C. LUKE, Lt Colonel, USAF
Chief, Reliability and Compatibility Division

FOR THE COMMANDER: John P. Huss

JOHN P. HUSS
Acting Chief, Plans Office

If your address has changed or if you wish to be removed from the RADC mailing list, or if the addressee is no longer employed by your organization, please notify RADC (RBET), Griffiss AFB NY 13441. This will assist us in maintaining a current mailing list.

Do not return this copy. Retain or destroy.

UNCLASSIFIED

SECURITY CLASSIFICATION OF THIS PAGE (When Data Entered)

REPORT DOCUMENTATION PAGE

READ INSTRUCTIONS BEFORE COMPLETING FORM

1. REPORT NUMBER: RADC-TR-80-32

2. GOVT ACCESSION NO.

3. RECIPIENT'S CATALOG NUMBER

4. TITLE (and Subtitle): BUILT-IN-TEST AND EXTERNAL TESTER RELIABILITY CHARACTERISTICS

5. TYPE OF REPORT & PERIOD COVERED: Final Technical Report, May 1978 — July 1979

6. PERFORMING ORG. REPORT NUMBER: LR29052

7. AUTHOR(s): Mr. Donald E. Tuttle, Mr. Richard Loveless

8. CONTRACT OR GRANT NUMBER(s): F30602-78-C-0157

9. PERFORMING ORGANIZATION NAME AND ADDRESS: Lockheed California Company, PO Box 551, Burbank CA 91520

10. PROGRAM ELEMENT, PROJECT, TASK AREA & WORK UNIT NUMBERS: 62702F, 23380222

11. CONTROLLING OFFICE NAME AND ADDRESS: Rome Air Development Center (RBET), Griffiss AFB NY 13441

12. REPORT DATE: March 1980

13. NUMBER OF PAGES: 96

14. MONITORING AGENCY NAME & ADDRESS (if different from Controlling Office): Same

15. SECURITY CLASS. (of this report): UNCLASSIFIED

15a. DECLASSIFICATION DOWNGRADING SCHEDULE: N/A

16. DISTRIBUTION STATEMENT (of this Report): Approved for public release; distribution unlimited

17. DISTRIBUTION STATEMENT (of the abstract entered in Block 20, if different from Report): Same

18. SUPPLEMENTARY NOTES: RADC Project Engineer: Daniel Gleason, 1Lt, USAF (RBET)

19. KEY WORDS (Continue on reverse side if necessary and identify by block number):
Reliability
Built-in-Test
Test Equipment
Avionics Maintainability
Testability

20. ABSTRACT (Continue on reverse side if necessary and identify by block number):

This report presents the results of a study of built-in-test (BIT) and external test equipment reliability impact on prime equipment design and maintenance down time. Sixty (60) units were analyzed from the S-3A, C-5A, and MK-86 weapons systems to develop BIT and external tester measurement effectiveness versus unit design characteristics. Trade-off criteria are developed for predicting BIT and test equipment reliability during the acquisition of new systems.

DD FORM 1 JAN 73 1473 EDITION OF 1 NOV 65 IS OBSOLETE

UNCLASSIFIED

SECURITY CLASSIFICATION OF THIS PAGE (When Data Entered)

EVALUATION

1. The objective of this study was to evaluate the reliability of electronic equipment built-in-test (BIT) circuitry, and the reliability of external testers (ET) used to support electronic equipment. The reliability was to be evaluated as a function of the complexity, physical characteristics, and functional characteristics of the BIT and external testers used in support of a system. The study was also to determine the impact on the operation of the prime equipment due to the failure modes of the BIT and external testers.

2. The methodology developed herein satisfactorily achieves the objectives for which it was intended. This study presents the necessary relationships for assessing the reliability of the BIT and external testers used to support electronic systems. The results and the outcome of this study provides a means for evaluating BIT/ET reliability during the conceptual and design phases of the system acquisition process. The study also relates the effectiveness of BIT and ET to design parameters to provide insight into how well the BIT and ET are performing their designated function of fault detection and isolation.

3. The ability to relate BIT/ET reliability and effectiveness characteristics of basic design parameters provides the design engineer with the required tools to perform trade-off analyses in order to optimize system design. With the constantly increasing cost of supporting and maintaining present day defense systems, it is fundamentally important that design engineers properly integrate built-in-test and the use of external testers into the overall system design process so as to minimize life cycle costs associated with system acquisitions. The results of this study will be used as inputs to design guides and acquisition guides for test support systems.

DANIEL GLEASON, ILt, USAF
Project Engineer

Availability Codes
Dist | Avail and/or special
A

SUMMARY

This report presents the results of a study of built-in-test (BIT) and BIT reliability, the impact of incorporating the BIT on prime equipment reliability and downtime based on design characteristics, and field experience.

Built-in-test (BIT) is incorporated in electronic equipment to minimize maintenance downtime in the event of a failure and to test for system readiness prior to and during operation.

External test equipment (TE) is used for system checkout and during the equipment repair cycle to isolate failures and verify rework results. The use of external testers reduces the need for complex prime equipment BIT, but at the same time introduces new items to be supported. The use of test equipment during the repair cycle to isolate faults to the desired logistic elements affects total reliability and life-cycle cost to a significant degree. This report presents the results of a study of external testers and the relationships between the prime equipment and test equipment failures.

This study's emphasis is on aircraft electronic systems with detailed analysis of design characteristics, field experience, and intermediate/depot level automatic test equipment reliability. The study also considers the characteristics of ship-based radar systems which are typical of rack-mounted electronics.

The airborne systems are from the S-3A, and C-5A aircraft. The C-5A Malfunction Detection Analysis and Recording (MADARS) system is considered a special-purpose, central-integrated test system. The ship-based equipment includes portions of the MK-86 radar fire control system. The intermediate/depot level line replaceable unit (LRU) tester studied is the AN/USM-247 Versatile Automatic Test Set (VAST) and the card level tester is the AN/USM-403 Hybrid Automatic Test Set (HATS). Additional test equipment is studied to provide information on the reliability of various types of testers.

Field experience data are based on military maintenance reporting systems as follows: U.S. Air Force, 66-1; U.S. Navy airborne systems, Maintenance Material Management (3M) system; and U.S. Navy shipboard systems, Maintenance

Data System (MDS). Supplemental field data from operating sites are used to augment the service-collected data on the systems studied. The use of service data provides a realistic measure of operational aspects of BIT.

Design attributes studied for the prime S-3A equipment are (1) the percentage of unit failure rate which is BIT, (2) the percentage of the unit failure rate monitored by BIT, and (3) test equipment failures as a percentage of prime equipment failures.

The effectiveness of the BIT is evaluated from field data by considering several effectiveness measures. The distribution of organizational-level maintenance times is used to obtain a factor indicating excessive maintenance time. The BIT efficacy is evaluated using three effectiveness measures: (A) the percentage of system faults which cannot be duplicated at the organizational level which were BIT discovered, (B) the percentage of organizational level maintenance over three hours, and (C) the intermediate-level, can-not-duplicate (CND) percentage. A wide range of equipment types and BIT characteristics are evaluated to arrive at relationships which can be used during early planning and design phases for new Government acquisitions to develop BIT/TE systems. Equipment design factors studied include weight, power, system complexity (number of units in a subsystem), parts count, number of cards, number of equipment failure modes, and type of equipment.

BIT characteristics studied include types of BIT, method of activation, method of evaluation, and the effect of operator intervention. The types of BIT studied are comparator, wraparound, signal monitors, and interactive. Manual and computer-initiated BIT are the methods of activation. Three methods for evaluating the results used during the running of BIT are studied: operator, central computer, and unit internal software. The impact on BIT, which requires operator intervention, is independently assessed.

A correlation study of the data relating the LRU design attributes to the effectiveness measures for equipment design factors and BIT characteristics provides a basis for the development of criteria for use in BIT and TE trade-off studies.

Three levels of data analysis are employed in developing criteria which can be used by system designers and analysts. The first level analysis provides averages for the characteristics which can be used for quick estimates of individual parameters. At the next level of analysis a generalized least squares curve fitting technique is used to obtain a best fit curve for the parameter pairs from among 72 possible first and second order polynominals. The third level of analysis uses multiple linear correlation techniques to provide equations relating the equipment design factors, BIT characteristics, design attributes and effectiveness measures. Of the three levels of analysis only the first and third provided useful results.

In summary, the following generalizations, illustrated in figure 1, can be made:

- The addition of BIT to the LRU pays off in lower maintenance time/cost at a minimal decrease in equipment reliability.

- The range of BIT is 5 to 15 percent, depending on the type of electronic circuitry.

- The percent tested by BIT is in the range of 83 to 95 percent.

- The most effective BIT characteristics are:

  Design - Wraparound testing or signal monitoring over comparitor and interactive BIT.
  Activation - Computer over manual.
  Evaluation - Dependent on weight of BIT design attributes and maintenance effectiveness. Operator evaluation is best from an excessive maintenance standpoint and manual intervention in the case of cannot duplicate at intermediate level. BIT design attributes favor computer evaluation.

- Airborne and rack mounted electronics have the same effectiveness for a given percent BIT, when total maintenance time is considered.

- Design tradeoff equations produced using multiple regression techniques provide a high level of correlation for predicting actual test equipment failures.

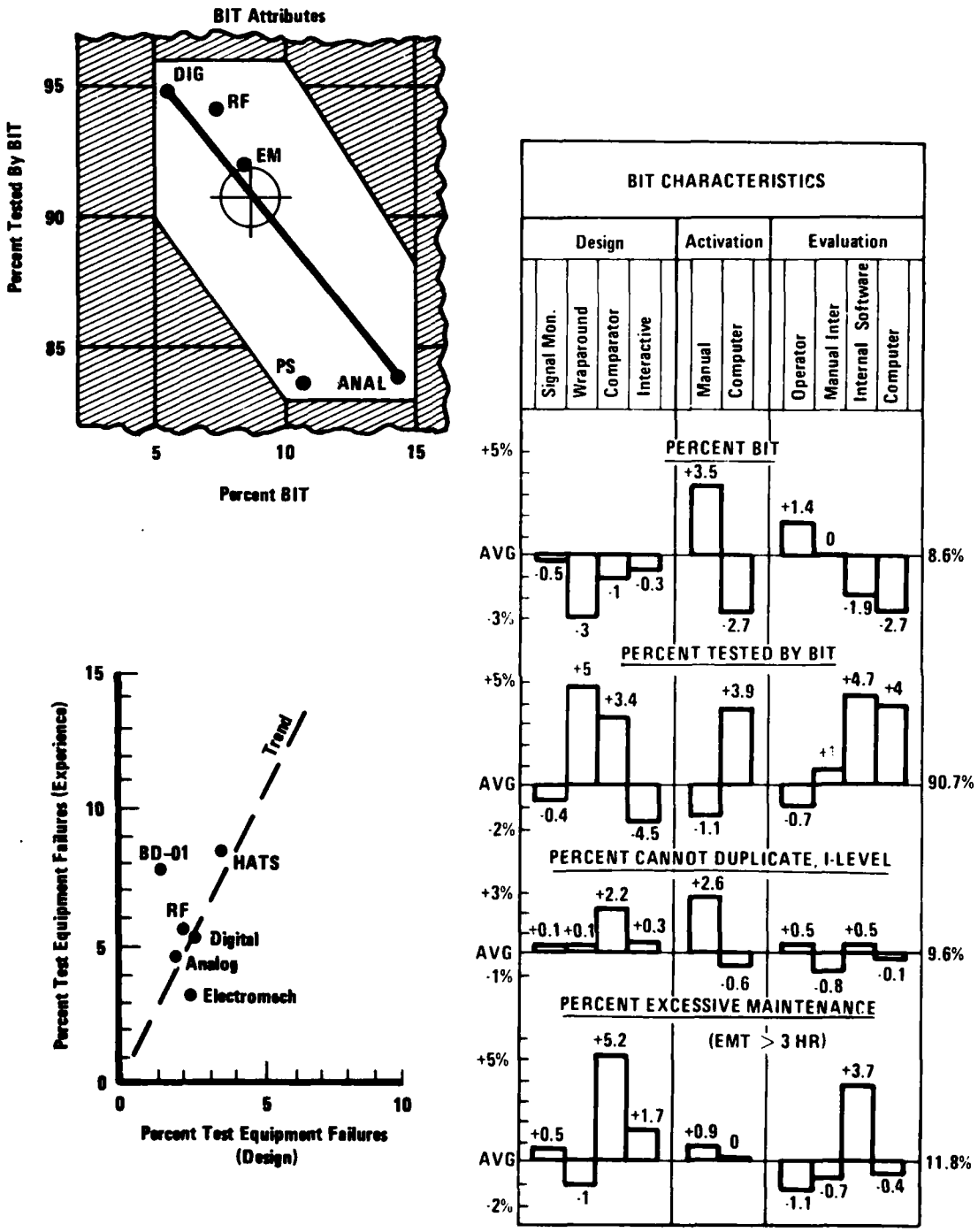

Figure 1. Summary results BIT and TE characteristics

TABLE OF CONTENTS

Section		Page
	SUMMARY	1
	LIST OF FIGURES	8
	LIST OF TABLES	9
1	INTRODUCTION	11
1.1	BACKGROUND	11
1.2	BUILT-IN TEST	12
1.2.1	System Monitor	12
1.2.2	System Checkout	12
1.2.3	Fault Isolation	12
1.3	TEST EQUIPMENT AND FUNCTION	13
1.3.1	System Checkout	13
1.3.2	Fault Isolation	13
1.3.3	Test Equipment Types	13
1.4	LEVEL OF REPAIR	13
1.4.1	Maintenance Level	14
1.4.2	Hardware Levels	14
1.5	STUDY ORGANIZATION	14
2	TECHNICAL DISCUSSION	18
2.1	BIT CHARACTERISTICS AND DFSCRIPTION	18
2.1.1	BIT Types	18
2.1.2	Method of Activation	21
2.1.3	Method of Evaluation	21
2.1.4	Operator Interaction	23
2.2	MEASUREMENT PARAMETERS - BIT	23
2.2.1	Design Attributes	23
2.2.2	Effectiveness Measures	23
2.3	TEST EQUIPMENT CLASSIFICATION AND DESCRIPTION	24
2.3.1	Design Characteristics - TE	25
2.3.2	Measurement Parameters - TE	25

TABLE OF CONTENTS (continued)

Section		Page
3	EQUIPMENT DESIGN ANALYSIS	27
3.1	S-3A AVIONICS	27
3.1.1	S-3A Avionics BIT Design Characteristics	29
3.1.2	S-3A Avionics Maintenance Plan	29
3.2	C-5A AVIONICS	30
3.3	MK-86 SHIPBOARD WEAPON CONTROL SYSTEM	30
3.4	TEST EQUIPMENT	32
3.4.1	S-3A Special Purpose Tester	32
3.4.2	Versatile Avionic Shop Tester	32
3.4.3	Hybrid Automatic Test System	33
3.4.4	Special Testers	33
3.4.5	C-5A Test Equipment	33
3.5	EQUIPMENT DESIGN ATTRIBUTES	33
4	FIELD SURVEY RESULTS	50
4.1	MAINTENANCE DATA	50
4.2	S-3A LRU DATA	51
4.2.1	Can-Not-Duplicate	51
4.2.2	Maintenance Time Distribution	52
4.2.3	BIT Versus Operator-Discovered False Alarms	54
4.2.4	BIT Field Reliability	55
4.3	TEST EQUIPMENT	55
4.3.1	Test Equipment Reliability	55
4.3.2	Non-Ready-For-Issue Units	56
4.3.3	Averaged Data	56
4.4	C-5A DATA	57
4.5	MK-86 DATA	57
4.6	INDUCED FAILURES	57
5	EVALUATION OF RESULTS	69
5.1	REGRESSION ANALYSIS	69
5.1.1	Linear Regression Analysis	69
5.1.2	Data Quality	69

TABLE OF CONTENTS (continued)

Section		Page
5.2	CURVE FITTING STUDY	72
5.3	MULTIPLE REGRESSION ANALYSIS	73
5.4	S-3A DATA ANALYSIS	78
5.4.1	System Design	78
5.4.2	BIT Design Attributes	78
5.4.3	Effectiveness Measures	79
5.4.4	Built-in-Test Characteristics	79
5.5	TEST EQUIPMENT DATA	82
5.5.1	S-3A Automatic Test Equipment	82
5.6	MK-86 DATA	84
6	DESIGN TRADE-OFFS	85
6.1	BUILT-IN-TEST - TEST EQUIPMENT TRADE-OFFS	85
6.2	PRELIMINARY ANALYSIS	87
6.2.1	Amount of BIT	87
6.2.2	Type of BIT	87
6.2.3	External Test Equipment Predictions	87
6.3	DETAILED ANALYSIS	88
7	CONCLUSIONS AND RECOMMENDATIONS	90
7.1	RESULTS	90
7.2	RECOMMENDATIONS FOR DESIGN	90
7.3	RECOMMENDATIONS	90
7.3.1	Future Technology	92
REFERENCES		93
APPENDIX A	SINGLE CORRELATION COEFFICIENTS	94
APPENDIX B	LIST OF ABBREVIATIONS AND ACRONYMS	95

LIST OF FIGURES

Figure		Page
1	Summary results - BIT and TE characteristics	4
2	Typical line replaceable unit (LRU)	16
3	Typical shop replaceable unit - BIT card.	17
4	BIT design characteristics - comparator monitor.	19
5	BIT design characterisitcs - wraparound.	20
6	BIT design characteristics - signal monitor.	22
7	S-3A central avionics system.	28
8	C-5A MADARS test system.	31
9	MK-86 system.	31
10	Maintenance time distribution -AFCS	53
11	Percent built-in-test failures-design versus percent built-in-test failures-experience.	71
12	Built-In-Test Characteristics	81
13	Test Equipment Comparison.	83
14	Design trade-off process	86
15	External test equipment failures-predicted versus actual	89

LIST OF TABLES

Table		Page
1	S-3A Equipment	35
2	S-3A Physical Characteristics - Analog Units	36
3	S-3A Physical Characteristics - Digital Units	36
4	S-3A Physical Characteristics - RF Units	37
5	S-3A Physical Characteristics - Electromechanical Units	37
6	S-3A Physical Characteristics - Power Supplies	37
7	S-3A Equipment Bit Characteristics	38
8	C-5A MADARS System Line Replaceable Units	39
9	C-5A Avionics Monitored by MADARS	40
10	MK-86 Radar Fire Control System	41
11	Test Equipment Design Characteristics	42
12	VAST Building Block Characteristics	43
13	VAST Building Block Usage	44
14	Hybrid Automotive Test Set AN/USM-403 Characteristics	45
15	APX-72 and APX-76 Test Set Characteristics	46
16	UG2395BA01 Characteristics	47
17	S-3A Equipment Design Attributes	48
18	Test Equipment Failure Rate - Predicted	49
19	S-3A LRU Data	58
20	Organization and Intermediate Level Percent Can-Not-Duplicate	59
21	Charged Maintenance Times - Sample (AFCS)	60
22	Elapsed Maintenance Time Distribution	61
23	System Can-Not-Duplicate Results	62
24	Field Reliability Experiences of BIT	62
25	Test Equipment Reliability	63
26	VAST Building Block Reliability	64
27	LRU-VAST Reliability Field Experience	65
28	Non-RFI Units	66
29	C-5A Field Data	67
30	MK-86 Maintenance Data	68

LIST OF TABLES (Continued)

Table		Page
31	Correlation Equations.	73
32	Summary of Multiple Regression Analysis	75
33	Regression Equations-Term Coefficients	76
34	Design Recommendations.	91

SECTION 1

INTRODUCTION

1.1 BACKGROUND

In recent years, more and more use is being made of built-in-test (BIT) circuitry and external testers in supporting electronic equipment to ensure that the prime equipment's downtime is kept to a minimum and that the maintenance personnel and skill-level requirements are also minimized. The inclusion of BIT circuitry in prime equipment can have a detrimental effect on that equipment's reliability. This is caused by one of four failure modes of the BIT circuitry:

- Induced failures - BIT causes failure of prime equipment.
- False reports - BIT reports a failure of the prime equipment when none exists (false alarm).
- Fails to report - BIT does not indicate a failure when system has a valid failure.
- False report - BIT reports wrong unit failed.

All of these instances cause downtime of the prime equipment and necessitate the presence of maintenance personnel. Failure of an external tester, while not directly affecting prime equipment operation, can adversely impact system availability and contribute to logistic problems. Hence, the reliability attributes of external testers and BIT affect system reliability and life-cycle cost to a significant degree. The interface and interactions of the reliability of the BIT and external testers with the reliability and operation of the prime equipment is explored by this study.

It is necessary to be able to predict the reliability of the prime equipment and system, taking into account such factors as: BIT reliability, external tester reliability, false-alarm characteristics (of both BIT and external testers) and probabilities (of false indications or alarms), and failure modes of the BIT circuitry. This effort, performed under the direction of Rome Air Development Center, explores these and other closely related areas.

1.2 BUILT-IN TEST

BIT is incorporated in prime equipment to perform three basic and related functions, first as a system monitor, second for system checkout, and third to isolate a fault to facilitate repair. The ability of differing BIT designs to perform the three tasks varies with the characteristics of the equipment and criticality of the BIT function.

1.2.1 System Monitor

The design of equipment, such as autopilots, whose failure can affect the safety of flight has led to the development of BIT which interacts with, and controls, the operation of the prime equipment. During operation of systems which are interconnected by data buses, there is also a need to continuously monitor equipment on the bus to avoid using erroneous data. This has led to the development of software monitoring of peripheral equipment. When redundant systems are incorporated, it becomes necessary to monitor the active channel and, if inactive-standby redundancy is employed, to turn on the second channel upon failure. Systems, such as warning receivers designed to alert the crew only when selected signals are received, require some form of periodic test to verify system integrity. Thus, system monitoring has become a prime function of BIT.

1.2.2 System Checkout

The second function of BIT is to accomplish system checkout prior to operation. During system checkout, the BIT, with possible crew intervention, operates to ensure that the system is fully operational. This type of check is more extensive than those accomplished during system monitoring and includes checks of the BIT function itself.

1.2.3 Fault Isolation

A third and distinct function of BIT is to aid the maintenance crew in isolating faults to the failed unit, replaceable assembly, or part. This function of BIT is the most complicated and is the one which has the biggest payoff in terms of support costs. BIT, to be effective, must do two things: It must correctly identify the failed unit, and it must allow the maintenance crew to perform its task with a minimum of time and manpower.

1.3 TEST EQUIPMENT AND FUNCTION

Test equipment (TE) is used for several purposes. The first function is system or unit checkout, and the second is isolation of faults to lower levels to allow repair of the equipment. In this respect, its function overlaps that of the prime equipment BIT. Usually, however, the test equipment is used at lower echelons in the maintenance chain to verify results of higher level maintenance activities and to isolate to lower levels of repair.

1.3.1 System Checkout

The system checkout function of TE usually involves a unit verification test at lower maintenance levels. Some systems are designed for a total system check, using test equipment to stimulate the system rather than BIT, or using TE as an aid to BIT for isolation. The system checkout function can be performed at any level of equipment identure, i.e., system, line replaceable unit (LRU), or shop replaceable unit (SRU).

1.3.2 Fault Isolation

The functions of fault isolation and verification are often combined in the same tester so that, prior to repair and following repair, the same basic test is run. The degree or level of fault isolation depends on the maintenance plan adopted for the prime equipment.

1.3.3 Test Equipment Types

Test equipment generically can be separated into two types: special-purpose testers which are designed to test specific systems, and general-purpose testers designed for checkout of multiple units. The current trend is to increased use of automatic general-purpose testers.

1.4 LEVEL OF REPAIR

For both BIT and TE, the key effector is the level of repair (LOR) plan. The LOR plan matches two subjects; the maintenance level where the repair is to be made, and the hardware level.

1.4.1 Maintenance Level

This study addresses military systems which employ multiple levels of repair. The typical levels are organization, intermediate, and depot. Each level results in progressively smaller units being tested and isolated.

1.4.2 Hardware Levels

Hardware levels in this study involve subsystems, line-replaceable units (LRUs) which are typically "black boxes" (figure 2), shop replaceable units (SRUs) or cards (figure 3), and piece parts. Combining the maintenance level and hardware level produces several possible LOR plans. The basic plan followed for the equipment studied involves LRU isolation and replacement at organizational level; with LRU verification, and SRU isolation and replacement at intermediate level. SRU verification and piece part replacement also is performed at intermediate level. The matching of BIT and TE to different LOR concepts results in significant differences in the prime and support equipment.

1.5 STUDY ORGANIZATION

This study was organized to provide comparison between reliability and design traits of a wide range of equipment and to measure the effectiveness of the test system associated with the equipment. Design attributes for prime equipment of percentage BIT and percentage tested as related by predicted failure rates were obtained through an analysis of circuit designs for 40 LRUs. Measures of system effectiveness were obtained by use of maintenance data as reported by service maintenance recording systems.

The remainder of the study is organized in six sections. Section 2 presents a technical discussion of BIT and TE, and identifies key design parameters associated with the reliability and effectiveness of BIT and TE. Section 3 presents a description of the equipment studied and the design data for the equipment. Section 4 presents the field survey data obtained during the study and develops the effectiveness measures used to relate BIT reliability and effectiveness. Section 5 presents the results of data correlations between the various parameters. Section 6 presents the application of these results during the design trade-off process. The conclusions derived from the

study are presented in section 7 along with recommendations for design criteria. Recommendations for further study subjects are also included in the final section.

Figure 2. Typical line replaceable unit (LRU).

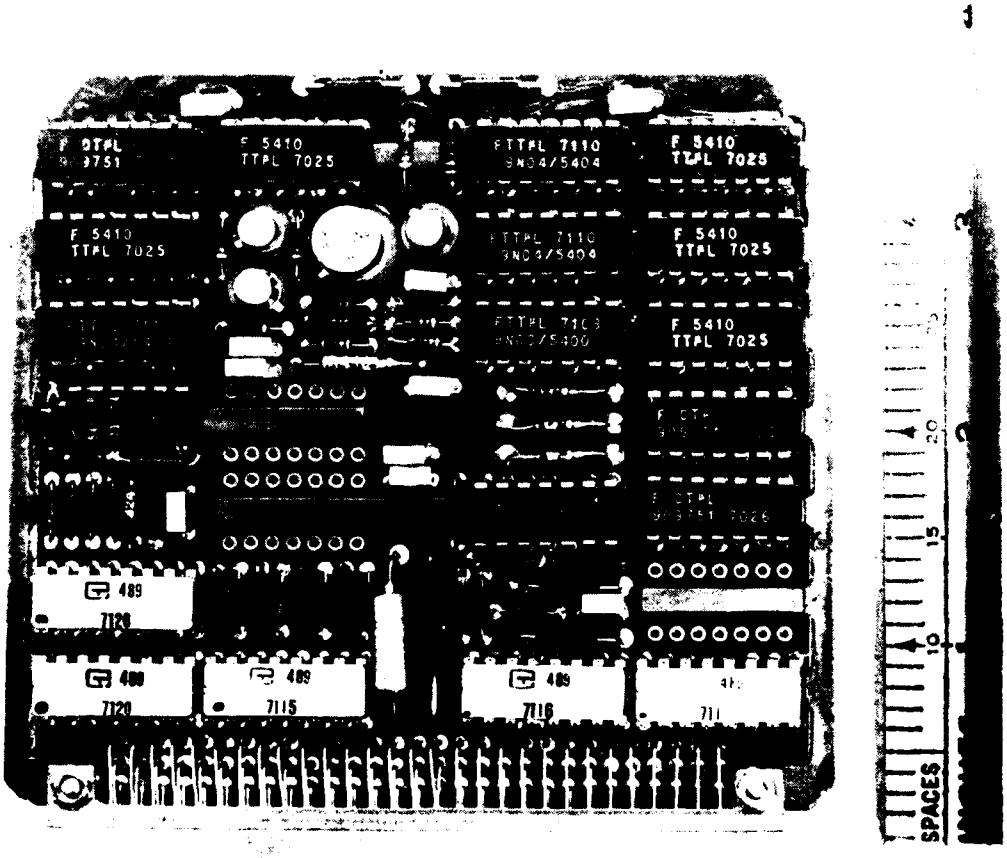

Figure 3. Typical shop replaceable unit - BIT card.

SECTION 2

TECHNICAL DISCUSSION

2.1 BIT CHARACTERISTICS AND DESCRIPTION

The characteristics of BIT, as used for comparisons of reliability and effectiveness, are based on circuit attributes and methods of using the BIT. For study purposes, BIT is classified by type, method of activation, method of evaluation, and use of operator intervention. This results in a total of 10 characteristics for BIT.

2.1.1 BIT Types

The first characteristic of BIT is based on type of test method. Comparison monitors, wraparounds, and signal monitors are three basic types of BIT. The fourth type in this group is interactive BIT.

2.1.1.1 Comparison Monitor BIT

Comparison monitors are used in dual-channel systems, as shown in figure 4. In the study, this type system was confined to the autopilot and autopilot-related systems which were designed fail safe so a detected failure will result in a safe disconnect. Signals from two nearly identical channels are compared at the point of signal output, and, if a difference is detected, a fault exists.

Comparison monitors are highly sensitive and the difference signal for a fault has to be determined based on signal levels and tolerances and on variations in time delays between the channels.

2.1.1.2 Wraparound BIT

Wraparound type BIT (figure 5) operates by providing a test signal that is routed through the prime equipment input and monitored at the output by the BIT module. By using multiple-injection points, fault isolation of segments or units can be achieved.

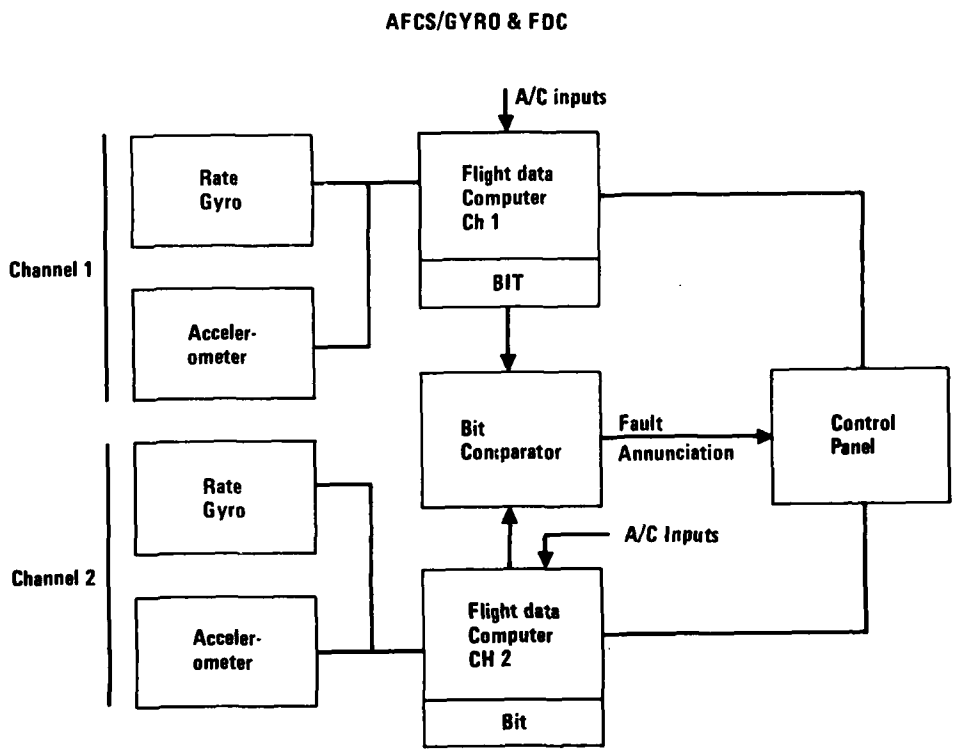

Figure 4. BIT design characteristics - comparator monitor.

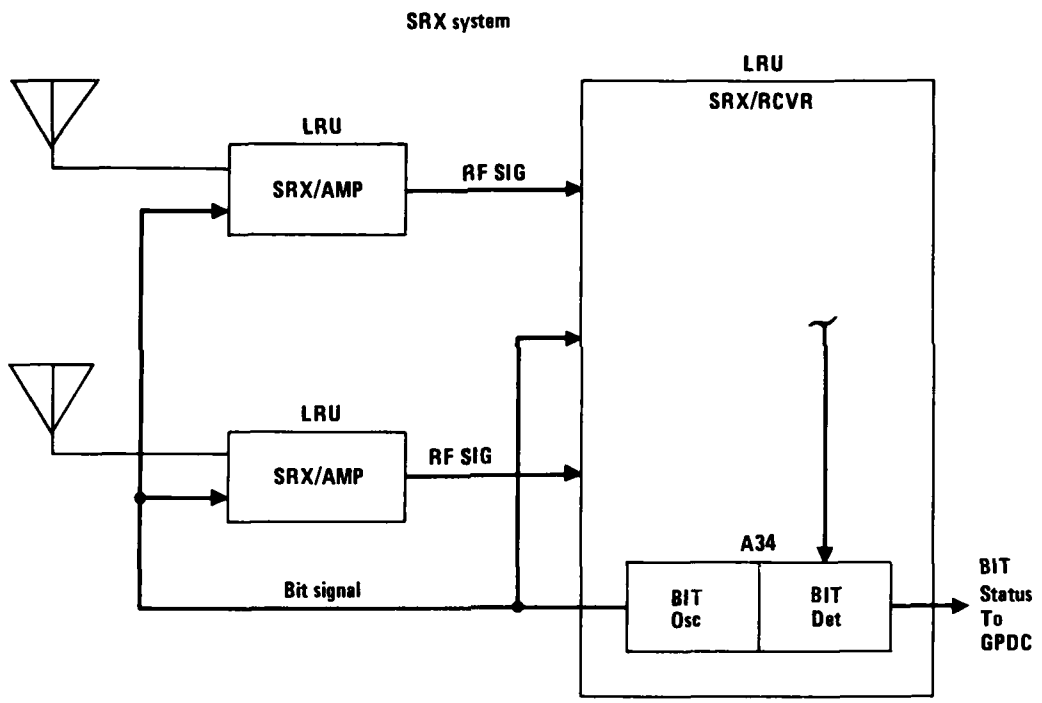

Figure 5. BIT design characteristics - wraparound.

2.1.1.3 Signal Monitor BIT

Signal monitors or level detectors (figure 6) are by far the most common type of BIT. Individual signals are monitored, and if a given signal or signal level is detected, the BIT considers the system to be in a go condition. The setting of the level to be detected is critical in many of these applications due to the need to differentiate between low-level signals and faults.

2.1.1.4 Interactive BIT

In a broad range of equipment, the BIT not only monitors the condition of the system, but interacts in system operation when a fault is detected by shutting down the prime equipment or switching in backup equipment.

2.1.2 Method of Activation

For the equipment studied, two methods existed for activating the BIT. Stand-alone systems have a manually activated BIT which requires the operator to activate the test from a control switch. Systems with this feature, used for monitoring a system, typically provide a reduced coverage automatically during prime equipment operation. The activated BIT provides a fuller test (including the BIT itselt) along with isolation provisions.

Computer-activated BIT is provided in systems run from a central computer. The computer activates the test provisions depending on mode selected by the operator.

2.1.3 Method of Evaluation

Three alternate means of evaluating a test include computer evaluation where selected responses can be compared to required response and bus responses checked, operator evaluation, and internal software evaluation.

The use of BIT requires independent evaluation of the results, especially during system check and fault isolation. Operator evaluation is one key factor with the operator able to monitor lights, and gage test signals and audio response.

The development of digital systems has led in recent years to units containing internal software-controlled evaluation further extending the effectiveness of BIT.

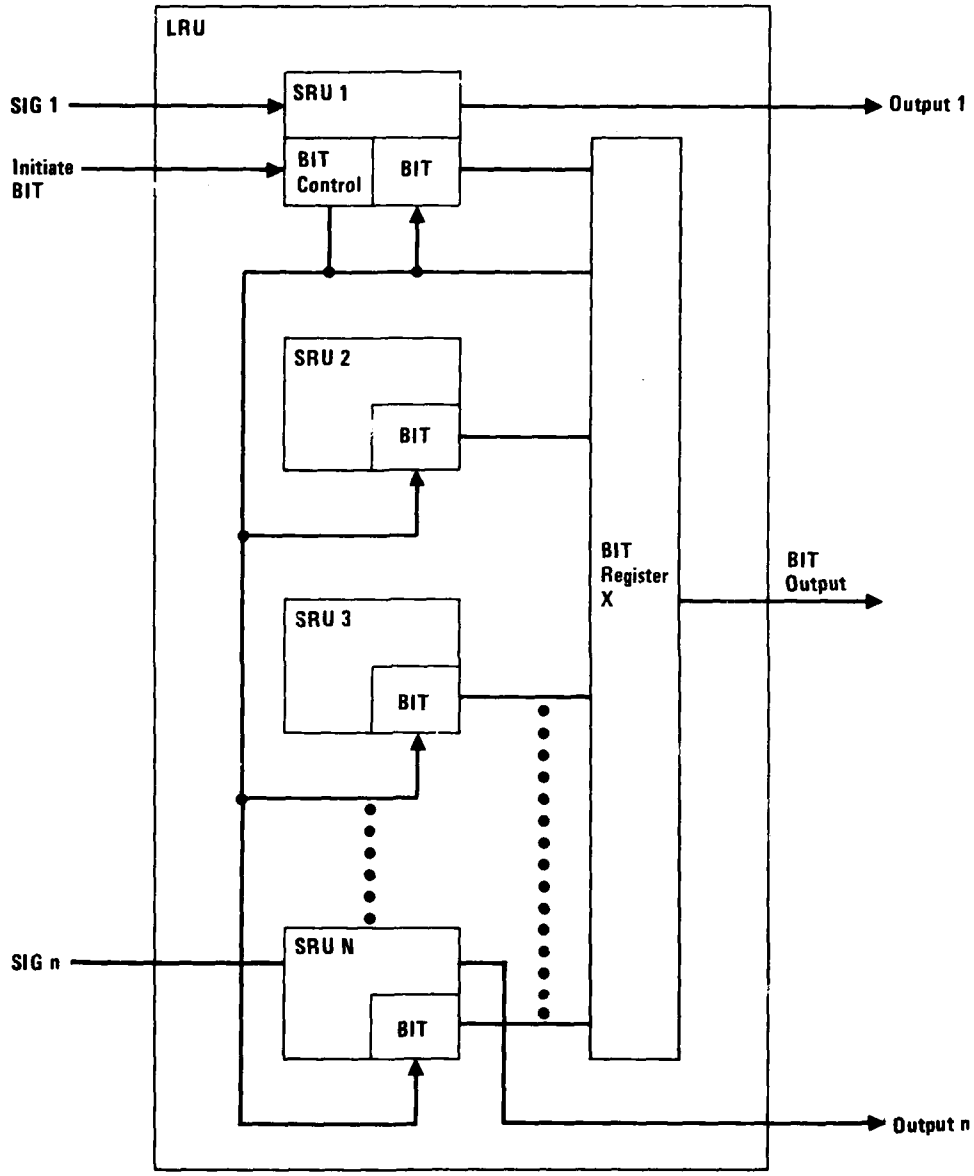

Figure 6. BIT design characteristics - signal monitor.

2.1.4 Operator Interaction

The operator plays a key role in many systems in which he activates controls and checks responses or extends the BIT capability by direct intervention in the operation.

Evaluation of BIT reliability and effectiveness data, as reported in Sections 4 and 5, consider each of the above 10 BIT characteristics in deriving comparisons. The classifications overlap, with some equipment employing several of the BIT design characteristics in the overall system test design.

2.2 MEASUREMENT PARAMETERS - BIT

2.2.1 Design Attributes

BIT design attributes can be measured in several ways. The design attributes considered in this study are the percentage of unit dedicated to BIT and percentage of unit tested by BIT, as quantified by failure rates. These parameters were selected as being values available during design and controllable during that phase. Measurement attributes relating to operational use, including operating or run time, recording provisions, sensitivity requirements, false alarm rates, etc., are also significant during design but not directly measurable by the methods employed in this study.

2.2.2 Effectiveness Measures

Three measures of BIT effectiveness were obtained during the study for correlation with the BIT design attributes. These three were selected to evaluate the BIT's ability to minimize maintenance penalties which relate to the BIT's prime function.

The first measure of BIT effectiveness is based on how faults were discovered. A sample of organization level can-not-duplicate (CND_O) faults was reviewed to determine whether BIT indicated the fault or if the operating crew wrote the squawk based on system operation.

The percentage of BIT-discovered faults, when multiplied by the organization-level CND percentage, produces an estimate of the false-alarm percentage for the BIT based on the following equation:

$$CND_o - \text{BIT reported} = \frac{CND_o \text{ actions}}{\text{TOTAL actions}} \times (\text{BIT DISCOVERED } CND_o/\text{TOTAL } CND_o) \qquad (1)$$

Conversely the operator false alarm percentage is

$$CND_o - \text{Oper reported} = \frac{CND_o \text{ actions}}{\text{TOTAL actions}} \times (\text{OPER DISCOVERED } CND_o/\text{TOTAL } CND_o) \qquad (2)$$

The second of the three parameters is based on the can-not-duplicate (CND) rate at intermediate levels (CND_I). This parameter measures the percentage of units tested and/or removed at organizational level which retest OK at the next level.

The next measure of effectiveness is based on maintenance time distribution. The traditional measure is mean time to repair (MTTR). The mean can cover a significant variation based on the skew of the actual distribution, so a different parameter was selected. The distribution parameter finally selected is percentage of maintenance over 3 hours. The 3-hour value is a qualitative selection based on several factors. The significance of the value lies in the fact that total maintenance over 3 hours represents a very significant portion of total maintenance effort and downtime (approximately one-half of total maintenance time).

2.3 TEST EQUIPMENT CLASSIFICATION AND DESCRIPTION

There are as many and diverse classifications of TE as there are for BIT. For this study, the primary classifications are based on use and automation. The first breakdown is by special-purpose versus general-purpose testers, and the second breakdown is based on automation.

2.3.1 Design Characteristics - TE

The first consideration in TE selection is whether or not special-purpose testers or general-purpose testers are to be employed. The level at which the tester is used and complexity of the test problem are key factors in this decision. With the advent of BIT and its use in maintenance, the trend and intent is to reduce the number of special-purpose testers at organizational levels.

The second factor, automatic-versus-manual testers is a function of the complexity of test requirement. Manual testers are effective when the number of required tests is small and the skill level not critical. As system, LRU, and SRU operating complexity increases, however, the need for automatic test programming increases to keep test time consistent with throughput requirements.

2.3.2 Measurement Parameters - TE

The reliability of the TE when compared to the prime equipment is one purpose of this study. To evaluate TE reliability in trade-offs, a relationship to prime equipment is required. For illustrative purposes, consider three systems. The first system incorporates neither BIT nor TE. The failure rate of the system is λ_p and:

$$\boxed{\text{Prime Equipment}} \qquad \lambda_{Total} = \lambda_p \tag{3}$$

$$\lambda = \lambda_p$$

$$\lambda_p = \frac{\text{prime eq failures}}{\text{prime eq operating time}}$$

The second system adds BIT for test purposes with a failure rate of λ_b:

$$\boxed{\text{Prime Equipment}} + \boxed{\text{BIT}} \qquad \lambda_{TOTAL} = \lambda_p + \lambda_b \tag{4}$$

$$\lambda = \lambda_p \qquad \lambda = \lambda_b$$

$$\lambda_b = \frac{\text{BIT failures}}{\text{prime eq operating time}}$$

When test equipment and BIT are used, the relationship is not as simple because the test equipment operates only when needed and the BIT is part of the unit under test.

Prime Equipment	+	BIT	+	Test Equipment
$\lambda = \lambda_p$		$\lambda = \lambda_b$		$\lambda = \lambda_{te}$

$$\lambda_{Total} = \lambda_p + \lambda_b + \lambda_{te} \quad (5)$$

$$\lambda_{te} = \frac{\text{test eq failures}}{\text{unit operating time}}$$

$$\lambda_{TE} = \frac{\text{test eq failure}}{\text{test eq run time}}$$

$$\lambda_p + \lambda_b = \frac{\text{unit failure}}{\text{unit operating time}}$$

$$RTE = \frac{\text{test eq run time}}{\text{unit tested}}$$

$$\lambda_{te} = \lambda_{TE} RTE\ (\lambda_p + \lambda_b) \quad (6)$$

OR

$$\lambda_{TOTAL} = \lambda_p + \lambda_b + \lambda_{TE}\ RTE\ (\lambda_p + \lambda_b) \quad (7)$$

For comparison purposes, both BIT and TE failures are evaluated as a percentage of unit failures by:

$$\text{Percentage BIT failures} = \frac{\lambda_b}{\lambda_p + \lambda_b} x100 \quad (8)$$

and:

$$\text{Percentage TE failures} = \frac{\lambda_{TE} RTE\ (\lambda_p + \lambda_b)}{\lambda_p + \lambda_b} x100 = \lambda_{TE} RTE\ x100 = \frac{\lambda_{te}}{\lambda_p + \lambda_b} x100 \quad (9)$$

with the units for the product $\lambda_{TE}RTE$ being,

$$\frac{\text{test eq failure}}{\text{test eq run time}} \times \frac{\text{test eq run time}}{\text{unit tested}} = \frac{\text{test eq failure}}{\text{unit tested}}$$

In determining test equipment failures in this manner a unit which tests OK induces test equipment failures based on run time and represents a small percent of unit failures. In the remainder of this study test equipment failures include CND failures.

SECTION 3

EQUIPMENT DESIGN ANALYSIS

The equipment in this study covers a wide range of systems and programs. The programs for which data were collected are the S-3A antisubmarine warfare (ASW) aircraft, the C-5A heavy logistic transport, and the MK-86 shipborne radar fire control system. Testers studied are an S-3A flight line intermediate level tester, S-3A intermediate level testers, and C-5A intermediate level tester. Equipment characteristics are detailed in the following paragraphs.

3.1 S-3A AVIONICS

The S-3A avionics in this study cover a wide range of equipment and equipment types. The S-3A started design in 1969 and entered service in 1974.

Several approaches to BIT were taken by Lockheed and its suppliers on the S-3A. The prime avionics are operated by a central computer under operator control, as shown in figure 7. BIT features are under combined software and operator control. For this study, a representative sample of units was selected to include all equipment types. In figure 7, the subsystems or portions of the subsystems studied are indicated by an asterisk.

In table 1, the units are identified along with system function and equipment type classification. Tables 2 through 6 present a breakdown of unit design characteristics for each type equipment. Equipment type classifications used are analog, digital, radio frequency(RF), electromechanical, and power supplies. The type of classifications is based on the primary characteristic of the unit; i.e., when a unit has analog and digital functions the classification is based on the type of SRUs which are in the majority.

In the tables, the weight, volume and power are based on physical measurements of the units. The number of SRUs is based on the maintenance breakdown of the line-replaceable unit. The number of components is based on a parts count from schematics of the units. The failure modes data is

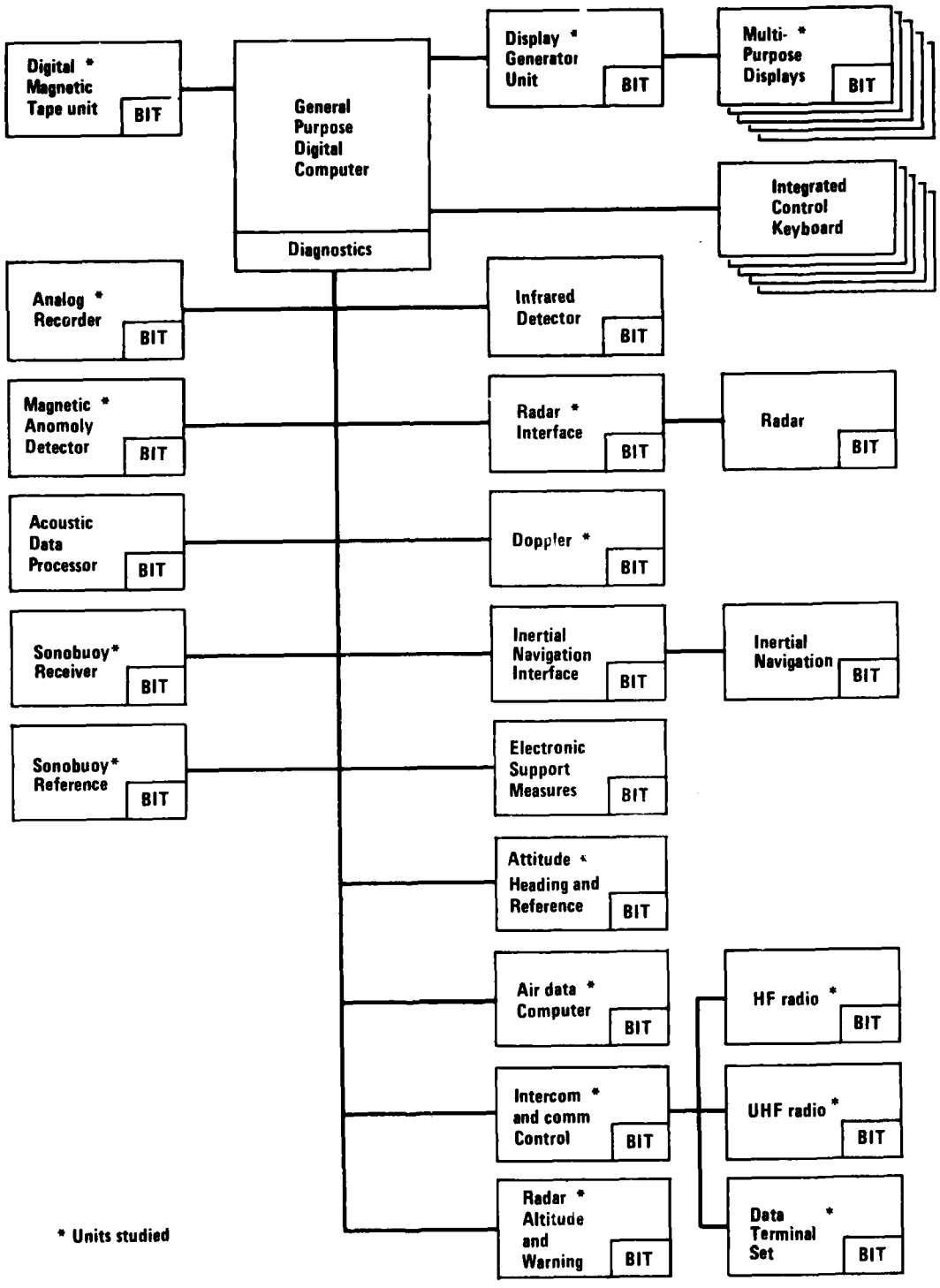

Figure 7. S-3A central avionics system.

based on the type component and potential modes for each type component as follows:

Component	Failure Modes
Resistor	1
Capacitors	2
Transistors	4
Diode - signal	2
Diode - power	3
Inductor - signal	1
Inductor - power	2
Integrated circuit	2 times inputs + 2 times outputs
Transformer	1 per winding
Relay	1 per pole
Filter	1
Switches	2
BITE indicators	1

3.1.1 S-3A Avionics BIT Design Characteristics

In this study, 10 classifications were established for BIT characteristics. Since the 10 characteristics are not mutually exclusive, each equipment type may have BIT design characteristics that result in its inclusion in more than one classification. The BIT characteristics for each equipment type as defined in section 2 are listed in table 7.

3.1.2 S-3A Avionics Maintenance Plan

The S-3A avionics maintenance plan consists of replacement of LRUs at the organization level. At intermediate level, the LRUs are tested using the USM-247(AS) Versatile Avionic Shop Tester (VAST) and the faulty module (SRU) replaced. For about half the SRUs, the SRU is tested at intermediate level using the USM-403(AS) Hybrid Automatic Test Systems (HATS) and repaired. The remaining SRUs are forwarded to depot level for eventual vendor repair.

3.2 C-5A AVIONICS

The C-5A avionics equipment included in this study is the Malfunction Detection, Analysis, and Recording System (MADARS). The MADARS is a form of Central Integrated Test Set (CITS) which is installed in the airplane to assist both the flight engineer and ground crew in checking the airplane LRUs and subsystem for degradation or failure. The system is used to monitor avionics, engines, and airframe systems, to record failure indications and to printout discrepancies using a hard-copy printer. For this study, the MADARS use as an avionic tester is emphasized. The percent of test equipment (TE) failures are compared to the S-3A BIT and TE failure percentages to determine to the avionics systems monitored in the C-5A aircraft. The C-5A %TE failures is compared to the S-3A BIT and TE failure percentages to determine the differences in type of test support using airborne and ground support test equipment. The C-5A system supports a maintenance concept of LRU replacement for organizational-level repair. The units of the MADARS system are shown in figure 8 and listed in table 8. The avionic systems tested are listed in table 9.

3.3 MK-86 SHIPBOARD WEAPON CONTROL SYSTEM

The MK-86 system is a versatile shipboard weapon control system. It is used on a variety of ships from destroyers to nuclear-powered cruisers to control weapons from 35mm to 8-inch guns, and surface-to-air and surface-to-surface missiles. There are a variety of configurations depending on the ship and its weapon complement. The twelve units shown in figure 9 were selected for the study of BIT. The units include two radar groups and one of the computer group units. The physical and functional characteristics of the units are presented in table 10.

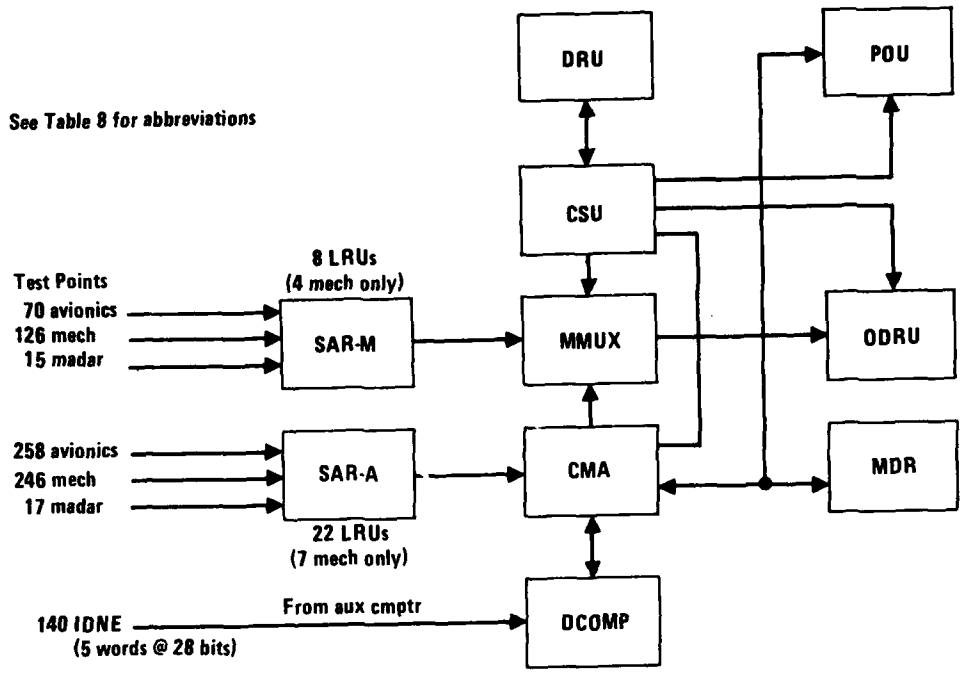

Figure 8. C-5A MADARS test system.

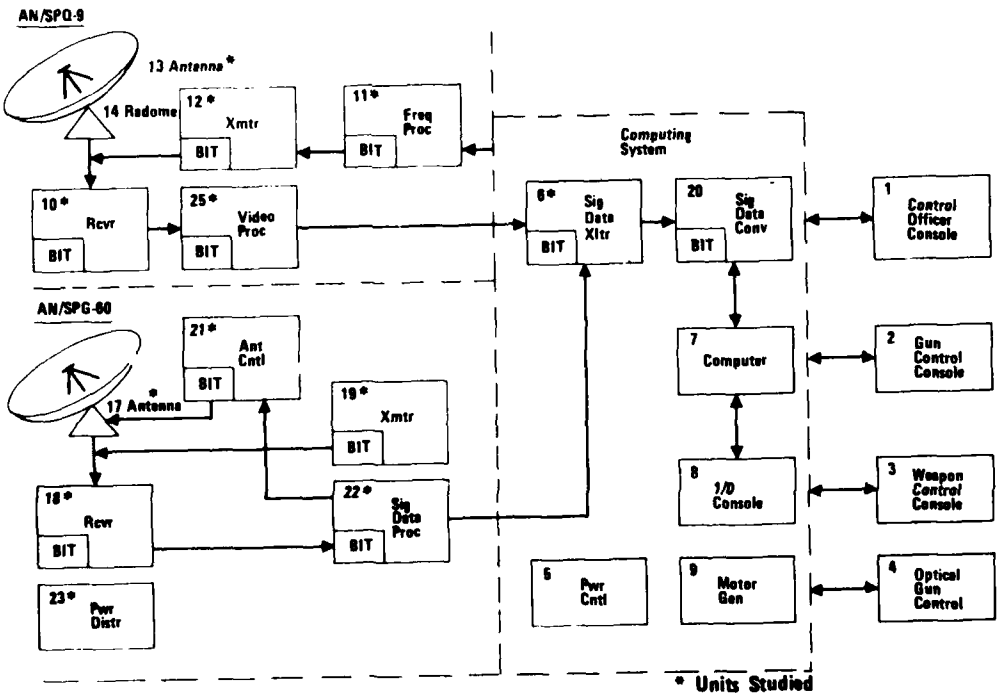

Figure 9. MK-86 system.

For this study, the MK-86 average maintenance time is compared to the S-3A combined Organization and Intermediate level maintenance elapsed time to determine the difference in elapsed time to isolate to a failed module.

The MK-86 BIT is a two-step function. A system test is run daily to verify operation or when a failure is observed. With the system test, which is a software-controlled operational test, a failure can be isolated to one of the units or racks. The maintenance plan then provides for the crew to use a BIT panel within the rack to manually isolate faults to a card.

3.4 TEST EQUIPMENT

This study collected reliability data on several test systems, shown in table 11, used to support aircraft avionics. On the S-3A, a special-purpose organization/intermediate-level tester was studied along with the previously mentioned intermediate-level testers, VAST, and HATS. From the C-5A program, a special-purpose intermediate-level tester was selected for study.

3.4.1 S-3A Special Purpose Tester

The recent trend in aircraft designs is to eliminate special-purpose flight line testers as much as possible. On the S-3A program, this resulted in only one significant tester and a few limited use small testers. The S-3A test set is used to test the aircraft's two control logic assemblies (CLAs) which provide electrical control signals to numerous actuators, relays and advisory lights. The tester can also check the control switches, relays and aircraft wiring for faults. The test set isolates faults within the CLAs to an SRU at either organization or intermediate level. The tester is built around an internal processor with a programmable read-only memory PROM containing the test instruction.

3.4.2 Versatile Avionic Shop Tester

The USM-247 (AS) VAST system is used by the Navy for intermediate-level test of LRUs removed from the aircraft. The tester can isolate faults to the SRU for repair of the LRU. The VAST system is composed of a number of rack-mounted TE units, called building blocks (BBs), with differing physical characteristics that are programmed as needed to test the LRUs. The BB characteristics are presented in table 12.

In determining an optimum mix of BIT and TE, the relative failure rate of

the TE is the key parameter in the trade-off. To arrive at a relative failure rate of VAST for each LRU being tested, a breakdown of building blocks needed to test each LRU was prepared. The LRUs and BB usage is presented in table 13. The relative failure rate of TE to prime equipment was then established based on test run time and BB failure rates.

3.4.3 Hybrid Automatic Test System

The USM-403 (AS) HATS is an intermediate-level automatic tester. It has been programmed to test a wide range of SRUs. The physical characteristics are listed in table 14.

3.4.4 Special Testers

Included in this study is an intermediate-level tester, which is used to test the APX-72 transponder and APX-76 interrogator. The test set is a manual tester used for all programs using the two IFF sets. The characteristics of the set are listed in table 15.

3.4.5 C-5A Test Equipment

The C-5A test equipment in this study is the UG2395BA01 test station. The test station is used to test the autopilot and MADARS at intermediate/depot level. Its characteristics are presented in table 16.

3.5 EQUIPMENT DESIGN ATTRIBUTES

The design attributes of S-3A equipment which are considered for comparison purposes in the remainder of the study are presented in table 17. The LRU design attributes of percentage BIT, percentage tested, and percentage TE failures are presented.

The percentage BIT was obtained using predicted failure rates for the equipment and for the BIT portion of the equipment. The percentage tested was obtained by analysis of the circuits and system test strategem for the LRU and is calculated from predicted failure rates. The percentage TE failure rate was obtained by using predicted failure rates for the VAST BBs. The values, when combined with the BB run time, provide the percentage of test equipment failures related to prime equipment failures.

When a LRU is run on the automatic tester, the elapsed run time includes the following elements:

(1) Setup/teardown time-average of 30 minutes have been experienced.

(2) Time to run fault detection test to point at which malfunction occurs. This time can range from seconds to the full fault detection (end-to-end) run time (R); depending on the location in the test program where the branch to the fault isolation (diagnostic) test occurs. An average of one-half the full fault detection test time is assured (½ R).

(3) The time for the fault isolation test run to the point where the tester displays the SRU(s) which must be replaced to repair the malfunction. This time, from the branch point, is relatively short & is included in the ½ R time of item (2).

(4) The time to replace the SRU and rerun the test from the nearest entry point prior to the previous malfunction branch. This point is identified in the test program instructions. If the previous test passes the branch point, the faulty SRU has been identified and a full rerun will be made. The time for SRU replacement, including those situations where more than one SRU must be substituted & retested before a "GO" condition is reached averages ½R.

(5) After the SRU has been replaced, a full fault detection (end-to-end) test is run (R) to declare the LRU ready for issue. In a small portion of the situations, the LRU will run without branching to a diagnostic test. These are retest okay or can not duplicate (CND) situations and results in a run time of 30+R. This tends to reduce the average experienced test time.

The total test equipment run time (RTE) will approach twice the fault detection run time plus setup/teardown time:

Fault detection run to branch including fault isolation test branch.	= ½ R
SRU replacement time including recycling for multiple SRU trials, and CNDs.	= ½ R
Rerun test verification	= R
Setup/teardown time	= 30
RTE	= 30 +2R

The failure rates and run time used in calculating the test equipment failure rates are shown in table 18.

TABLE 1. S-3A EQUIPMENT

Function	System / LRU – Nomenclature	Type *	WUC	Acronym
Navigation	Airspeed Altitude Computer, CP1077/AYN5	DIG	5671100	AACS
	Flight Data Indicator Set, OD59/A			FDIS/
	Vertical Deviation Indicator, ID1780/A	EM	71B1100	VDI
	Horizontal Situation Indicator, ID1779/A	EM	71B1200	HSI
	Navigation Data Repeater Converter, CV2854/A	DIG	71B1300	NDRC
	Doppler Radar Navigation Set, AN/APN200	RF	722F100	DOPPLER
	Inertial Navigation System, AN/ASA84 ( )			INSI/
	Navigation Control, C8746	EM	73B6100	CONT
	Nav Data Converter, CV2745 ( )	DIG	73B6200	CONV
	Radar Altimeter Altitude Warning Set, AN/APN201 ( )			RAAWS/
	Radar Receiver Transmitter, RT1023 ( )	RF	722H100	RT
	RAAWS Height Indicator, ID1770 ( )	EM	722H200	IND
	Attitude Heading Reference Set, AN/ASN107			AHRS/
	Displacement Gyroscope, CN1366 ( )	EM	734M100	GYRO
	Analog-to-Digital Converter, CV2858 ( )	DIG	734M200	CONV
Communications	Communication Control Group, OK248 (V)/AI			CC/
	Intercommunication Station, LS601/AI	EM	6435100	ICS
	ICS Communication Control, C8760/AI	EM	6435300	IRC
	Switching Logic Unit, CV3048 ( )/AI	DIG	6435400	SLU
	High Freq Radio Set, AN/ARC153A			HF/
	Receiver Transmitter, RF1016	RF	6126100	RT
	Radio Frequency Amplifier, AM6384A	RF	6126200	PA
	Antenna Coupler, CU1985	EM	6126300	AC
	Ultra High Frequency Radio Set, AN/ARC156			UHF/
	UHF Receiver Transmitter, RT1017	RF	6327100	RT
	Data Terminal Set, A/D Converter, CV2830/AYC	DIG	69X2X00	DTS
Data Processing	General Purpose Digital Computer, AYK10 (V)			GPDC/
	Power Supply No. 1, PP6679	PS	73B1600	PS1
	Power Supply No. 2, PP6678	PS	73B1C00	PS2
	Power Supply, Computer Processor, PP6675	PS	73B1700	PS-CP
	Power Supply, Input/Output Sect., PP6677	PS	73B1800	PS-IO
	Power Supply, Memory Sect., PP6676	PS	73B1A00	PS-MEM
	Digital Magnetic Tape Unit, RD348/ASH	DIG	73X2H00	DMTU
	Tape Transport Cartridge	EM	73X2H10	TTC
	Tactical Acoustic Display Set, AN/ASA82			TDS/
	Tactical Acoustic Ind (Tacco & Senso), IP1054	AN	73B4300	TS
	Display Generator Unit, CV2806	DIG	73B4500	DGU
Mission Avionics	Analog Tape Recorder Reproducer Set, AN/ASH27			ATR/
	Magnetic Tape Transport, RD349	EM	7382100	TT
	Tape Transport Interface Unit, MX8959	AN	7382200	IU
	Sonobuoy Radio Receiver Set, AN/ARR76			SRX/
	Sonobuoy Receiver, R1741	RF	739C100	RCVR
	RF Amplifier, AM6418	RF	739C300	AMP

*DIG = Digital, AN = Analog, RF = Radio Freq., EM = Electromechanical, PS = Power Supply

TABLE 1. S-3A EQUIPMENT (Continued)

Function	System / LRU – Nomenclature	Type *	WUC	Acronym
Mission Avionics (Continued)	Sonobuoy Bearing and Range Receiver, R1768/ARS2	RF	734P100	SRS
	Magnetic Anomaly Detection Analog-to-Digital Converter, CV2881/AS	DIG	73X2800	MAD/ CONV
Radar	Radar Interface Unit, C8788/AP	DIG	729F200	RIU
Airframe Systems	Speedbrake/Trim Control Unit	AN	1422200	STCU
	Wing/Empennage Deice Timing Control	AN	4131400	DEICE/TIM
	Windshield Temperature Controller	AN	4941100 4941200	WTC
	Automatic Flight Control Set, AN/ASW33			AFCS/
	Rate Gyroscope, CN1370	EM	5736400	GYRO
	Flight Data Computer, CP1074	AN	5736700	FDC
	Generator Control Unit	AN	4211400	GCU

*DIG = Digital, AN = Analog, RF = Radio Freq., EM = Electromechanical, PS = Power Supply

TABLE 2. S-3A PHYSICAL CHARACTERISTICS - ANALOG UNITS

System/Unit	Weight (lb)	Volume (in^3)	Power (watts)	No. of SRU's	No. of Components	No. of Failure Modes	No. of LRU's in System
STCU	18.4	125	230	19	2255	6594	3
DEICE/TIM	3.0	138	168	6	358	1176	11
GCU	6.0	242	83	7	318	698	4
WTC	4.5	255	337	3	188	657	2
AFCS/FDC	58.0	2161	821	44	17079	32480	6
ATR/IU	27.0	1330	642	29	2573	9533	2
TDS/TS	67.0	6684	625	17	1172	2432	6

TABLE 3. S-3A PHYSICAL CHARACTERISTICS - DIGITAL UNITS

SYS/LRU	Weight (lb)	Volume (in^3)	Power (watts)	No. of SRU's	No. of Components	No. of Failure Modes	No. of LRU's in System
AACS	31	914	203	25	2455	20370	1
CC/SLU	44	2394	412	29	5798	27959	6
DTS	32	538	125	36	2997	14243	1
RIU	43	1662	316	17	3082	23250	2
AHRS/CONV	18.5	744	154	15	1607	11084	2
TDS/UGU	80	4888	600	81	5608	44126	6
INSI/CONV	21.4	772	272	21	2436	20322	2
MAD/CONV	18	748	50	19	970	6513	1
DMTU	13.2	914	40	13	1096	5423	2
FDIS/NDRC	28	748	102	44	3019	20048	7

TABLE 4. S-3A PHYSICAL CHARACTERISTICS - RF UNITS

SYS/LRU	Weight (lb)	Volume (in^3)	Power (watts)	No. of SRU's	No. of Components	No. of Failure Modes	No. of LRU's in System
HF/RT	28	914	93	15	3717	8726	3
HF/PA	66	2367	605	3	1668	4265	3
UHF/RT	32	998	968	11	2928	5609	1
DOPPLER	44	3904	165	9	510	3121	1
RAAWS/RT	9.8	248	72	15	1795	5303	4
SRS	35	1539	150	29	2564	7542	1
SRX/RCVR	57	1829	240	49	4308	12664	3
SRX/AMP	0.8	22	3	2	47	88	3

TABLE 5. S-3A PHYSICAL CHARACTERISTICS - ELECTROMECHANICAL UNITS

System/Unit	Weight (lb)	Volume (in^3)	Power (watts)	No. of SRU's	No. of Components	No. of Failure Modes	No. of LRU's in System
AFCS/GYRO	4.0	77	23	8	303	640	6
HF/AC	22.0	1127	136	4	605	1682	3
CC/ICS	5.8	183	44	7	258	1424	6
CC/IRC	14.0	440	114	13	845	7593	6
FDIS/VDI	6.9	255	25	6	266	500	7
FDIS/HSI	7.9	285	39	8	397	883	7
RAAWS/IND	6.0	44	19	4	321	698	3
AHRS/GYRO	17.5	646	60	5	355	1077	2
ATR/TT	87.0	4826	115	16	1010	2744	2
INSI/CONT	7.4	383	49	7	394	2914	2
DMTU/TTC	6.8	135	25	2	175	396	2

TABLE 6. S-3A PHYSICAL CHARACTERISTICS - POWER SUPPLIES

SYS/LRU	Weight (lb)	Volume (in^3)	Power (watts)	No. of SRU's	No. of Components	No. of Failure Modes	No. of LRU's in System
GPDC/PSI	33	920	920	4	116	226	13
GPDC/PS-CP	7.0	118	310	4	147	320	13
GPDC/PS-IO	6.9	142	550	4	151	386	13
GPDC/PS-MEM	4.5	100	200	4	120	259	13
GPDC/PS2	32	920	920	4	116	226	13

TABLE 7. S-3A EQUIPMENT BIT CHARACTERISTICS

	Built-In-Test Characteristics									
	Type				Activation			Evaluation Aids		
SYS/LRU	Comparator	Wrap-Around	Signal Monitor	Inter-Active	Manual	Computer	Operator	Computer	Internal Software	Operator Inter-Action
STCU	X		X	X	X		X			X
DEICE/TIM			X		X		X			
GCU			X	X		X				
WTC					X					
AACS	X	X				X			X	
AFCS/GYRO	X		X	X	X			X		
AFCS/FDC	X		X	X	X				X	
HF/RT			X	X		X	X			X
HF/PA			X	X		X	X			X
HF/AC			X	X		X	X			X
UHF/RT			X			X				X
CC/ICS		X		X		X	X	X		X
CC/IRC		X		X		X	X	X		X
CC/SLU		X		X		X		X	X	X
DTS		X	X			X				
FDIS/VDI			X		X	X	X			X
FDIS/HSI			X		X	X	X			X
FDIS/NDRC			X			X		X	X	X
DOPPLER		X	X		X	X		X		
RAAWS/RT		X	X	X	X	X	X	X		X
RAAWS/IND			X		X		X			X
RIU			X			X		X		
AHRS/GYRO			X	X		X		X		
AHRS/CONV			X	X		X		X		
SRS			X			X		X		
ATR/TT			X	X		X		X		
ATR/IU			X	X		X		X		
SRX/RCVR		X	X			X		X		
SRX/AMP		X				X		X		
GPDC/PSI			X	X		X				
GPDC/PS-CP			X	X		X				
GPDC/PS-IO			X	X		X				
GPDC/PS-MEM			X	X		X				
GPDC/PS2			X	X		X				
TDS/TS			X		X		X			X
TDS/DGU			X		X	X	X	X		X
INSI/CONT		X	X	X	X	X	X	X		
INSI/CONV		X	X	X	X	X		X		
MAD/CONV		X	X			X		X		
DMTU			X			X		X		
DMTU/TTC			X			X		X		

TABLE 8. C-5A MADARS SYSTEM LINE REPLACEABLE UNITS

Line Replaceable Unit	Work Unit Code	Abbreviation	Predicted MTBF
Automatic Signal Acquisition Unit	55AAO	SAR-A	8621
Manual Signal Acquisition Unit	55ACO	SAR-M	7752
Maintenance Data Recorder	55AEO	MDR	5220
Control Sequencer Unit	55AGO	SCU	2747
Oscilloscope and Digital Readout Unit	55AJO	ODRU	2260
Central Multiplexer Adapter	55ALO	CMA	6939
Printout Unit	55ARO	POU	2640
Manual Multiplexer	55ATO	MMUX	6098
Digital Computer	55AVO	DCOMP	3136
Data Retrieval Unit	55AYO	DRU	2024

TABLE 9. C-5A AVIONICS MONITORED BY MADARS

System	Work Unit Code	Line Replaceable Unit
Airframe System	51A00	Bearing – Distance – Heading Indicator (BDHI), HSI, Attitude
	51B00	Central Air Data Computer
	51C00	Computer, Analog, Energy Management
	52A00	Computer, Pitch/Roll/Yaw/PACS Autopilot (AFCS)
	52E00	Go-Around Attitude System
	52G00	Angle of Attack
	52J00	Pitch Augmentation Computer
	52L00	Automatic Throttle Computer
	52N00	Stallimiter Computer
	52P00	Active Lift Distribution Control Computer
Communication	61A00	HF/SSB Comm
	62A00	VHF Comm
	62C00	VHF/FM Comm
	63A00	UHF Comm
	64A00	Intercomm Unit
	64C00	Winch Control/Intercomm
	64E00	Public Address
	65A00	Transponder
	66A00	Beacon, CDPIR
Navigation	71A00	Automatic Direction Finder
	71C00	LORAN
	71E00	Marker Beacon
	71G00	Glideslope Radio
	71J00	VHF Navigation VOR/LOC
	71L00	TACAN
	72A00	Inertial Doppler Computer (IDNE)
	72B00	Doppler Radar (IDNE)
	72C00	D/A Conv (IDNE)
	72D00	Multi-Mode Radar
	72E00	Radar Beacon
	72F00	Station Keeping Equipment
	72G00	Radar Altimeter

TABLE 10. MK-86 RADAR FIRE CONTROL SYSTEM

Unit No.	Description	Size-Inches H	Size-Inches W	Size-Inches D	Weight Pounds	Power Watts
6	Signal Data Translator	76	33	23	450	1,562
10	Radar Receiver	45	54	23	412	658
11	Electronic Frequency Control	76	32	25	399	1,207
12	Radar Transmitter	76	32	85	458	2,073
13	Radar Antenna	71	40	80	920	1,006
17	Radar Antenna	136	100	84	4,015	318
18	Radar Receiver	73	30	28	792	659
19	Radar Transmitter	73	24	28	643	5,320
21	Antenna Control	76	31	23	437	15,933
22	Signal Data Converter	76	31	23	366	289
23	Power Distribution Control	42	31	23	215	432
25	Video Processor	76	33	23	418	575

TABLE 11. TEST EQUIPMENT DESIGN CHARACTERISTICS

			MAINT LEVEL		TYPE			TEST LEVEL		PURPOSE		TYPE TEST			
TEST EQUIP	SYS	MTBF HRS	ORGAN	INTERMED	AUTO	MAN	SYS	LRU	SRU	GENERAL	SPECIAL	DIG	ANAL	RF	ELEC/MECH
MADAR	C-5	158	X		X	X	X	X			X	X	X		
UG2395 BA01	C-5	N/A		X	X			X	X	X		X	X		
VAST AN/USM 247	S-3A	30*		X	X			X	X	X		X	X	X	X
HATS AN/USM 403	S-3A	500		X	X				X	X		X	X		
BD01 CLA	S-3A	127	X	X		X	X	X			X	X			
APX 72/76	S-3A	N/A		X		X		X			X		X	X	

*VAST MTBF without building block duty cycle

TABLE 12. VAST BUILDING BLOCK CHARACTERISTICS

Bldg. Block No.	Identification	Functional Characteristics	Physical Characteristics Size (in.) H	W	D	Weight (lbs.)
01	Interface & Config. Switch	1000 Paths, 100 MHz	78	26	34	1000
04	Control Switch	Power/Load Distr.	14	19	23	110
10	Digital Multimeter	AC/DC Volts, Ohms	7	20.5	25	45
11	Freq & Time Interval Meter	10 Hz - 100 MHz	7	20.5	18.5	50
13	Delay Generator		7	20.5	18.5	50
14	Digital Subsystem	TTL & ECL Logic	78	26	34	1000
20	Sig. Gen.	0.1 Hz - 50 kHz	14	20.5	24	120
21	Sig. Gen.	10 kHz - 40 MHz	21	20.5	24.8	210
22	Sig. Gen.	20 MHz - 500 MHz	21	20.5	23	140
25	Sig. Gen.	0.4 GHz - 12 GHz	21	20.5	24.8	180
30	Servo Analyzer	2 ea. Synchro/Resolver	14	20.5	24	150
31	Synchro/Resolver Std.		21	20.5	24.8	150
33	Phase Sensitive Voltmeter		14	20.5	26	125
34	Pressure Gen.	Altitude Sim.	21	20.5	24.8	100
36	Arbitrary Function Gen.	Complex Waveforms	13.8	20.5	24	150
38	Low Freq. Wave Analyzer	Modulation Analyzer	21	20.5	24.8	150
40	Pulse Gen.		14	19	23	130
45	*RMS Voltmeter*	RF Voltmeter	14	20.5	26	60
48	Programmable Dig R/O Oscilloscope	Tektronix	21	20.5	23	425
49	Ratio Transformer	2 Transformers	7	20.5	23.8	150
50	Low Voltage d.c. Power Supply	4 LV Supplies	14	20.5	26	100
51	DC Power Supply 22 - 32 V	High Current	14	17	24.8	80
52	DC Power Supply 30 - 500 V	Medium Voltage	14	17	24.8	123
53	DC Power Supply 0.5 - 1 kV	High Voltage	21	20.5	24.8	150
55	AC Power Supply	3Φ& 1Φ, 400 Hz	14	20.5	24	150
57	RF Spectrum Analyzer	0.4 to 18.0 GHz	21	20.5	23	180
61	Precision Resistance Load	6, 1% Loads	14	19	23	150
62	High Power Resistance Load	9 Loads up to 3 kW	21	20.5	24.8	150
CMPT	Computer	24 k Word, 18 BIT	48	19	30	400
DTU	Data Terminal Unit	TTY & CRT	78	26	45	1000
MTTU	Magnetic Tape Units	2 Ampex	25.8	15.5	15.3	160

TABLE 13. VAST BUILDING BLOCK USAGE

LRU Tested	01	04	10	11	13	14	20	21	22	25	30	31	33	34	36	38	40	45	48	49	50	51	52	55	57	61	62	ID No.	BD25 MID
	Building Block Number – Quantity Used																												
STCU	1	1	1	1	1	1	1					1					1			1	3			1			1	BF39	
DEICE/TIM	1	1	1	1	1												1				1	1				1	1	BF95	
GCU	1	1	1	1			1														3	1	2	1		1	1	BC17	
WTC	1	1	1	1		1	1											1			3			1		1	1	BF95	
AACS	1	1	1	1		1						1		1			1	1	1		3			1		1	1	BF34	1
AFCS/GYRO	1	1	1	1																	3						1	BC12	
AFCS/FDC	1	1	1	1	1	1					1	1			2			1		1				1		1		BC32	
HF/RT	1	1	1	1		1	1	1													3	1		1		1	1	BF05	
HF/PA	1	1	1			1		1									1				1			1		1	1	BF03	
HF/AC	1	1	1	1		1												1			2	1		1		1	1	BF03	
UHF/RT	1	1	1	1		1	1		1									1			3			1	1	1	1	BF04	
CC/ICS	1	1	1	1		1															1			1		1		BC37	
CC/IRC	1	1	1	1		1															1	1		1				BC36	
CC/SLU	1	1	1	1		1	1										1	1		1	3	1	1	1		1	1	BC41	1
DTS	1	1	1	1		1	1									1	1	1			3			1			1	BF01	
FDIS/VDI	1	1	1									1								1	3			1		1		BC11	
FDIS/HSI	1	1	1			1						1									1			1		1		BC20	
FDIS/NDRC	1	1	1	1		1						1					1	1			3			1		1		BC13	1
DOPPLER	1	1	1	1		1											1	1			2		1	1				BF02	1
RAAWS/RT	1	1	1	1	1	1									1		1	1	1		2			1	1	1	1	BF25	1
RAAWS/IND	1	1	1	1											1		1		1		3			1		1	1	BF16	
RIU	1	1	1	1	1	1	1	1				1			2		1	1	1		3			1		1	1	BF19	1
AHRS/GYRO	1	1	1	1									1					1			3			1		1		BC29	
AHRS/CONV	1	1	1	1	1	1						1					1	1			2			1		1		BC28	1
SRS	1	1	1			1	1		1								1	1			3			1	1		1	BC35	1
ATR/TT	1	1	1	1		1	1								1	1		1			3			1		1	1	BF41	
ATR/IU	1	1	1	1		1	1	1								1	1	1			3			1		1	1	BF42	1
SRX/RCVR	1	1	1	1		1	1		1							1	1	1			1			1	1	1	1	BF94	1
SRX/AMP	1	1	1						1												1				1	1	1	BF94	
GPDC/PS1	1	1	1																		3		1	1		1	1	BF21	
GPDC/PS-CP	1	1	1	1																	2		2			1	1	BF22	
GPDC/PS-IO	1	1	1	1																	2		2			1	1	BF22	
GPDC/PS-MEM	1	1	1	1																	2		2			1	1	BF22	
GPDC/PS2	1	1	1																		3		1	1		1	1	BF21	
INSI/CONT	1	1	1	1		1															1			1			1	BF17	
INSI/CONV	1	1	1	1		1						1					1	1		1	2			1				BF18	1
MAD/CONV	1	1	1	1		1	1										1	1			2			1		1	1	BC27	1
DMTU	1	1	1	1		1										1	1	1			2			1		1		BF081	1

NOTE: ID = interface device, MID = Manchester bus interface device

TABLE 14. HYBRID AUTOMOTIVE TEST SET
AN/USM-403 CHARACTERISTICS

Unit	Characteristics	
Mechanical	3 Bay Rack Computer, 2 Disc Drives, AC and DC Power Supplies, CRT Terminal and Printer	78 h x 69 w x 48 d Inches WT 4185 lbs Input Power: 115 VAC, 3ϕ, 60 Hz 60 AMP/ϕ
Computer	Varian 620 L 20 K Word, 16 Bit Atlas Operating System	
Interface	378 Pins, at 10 MHz, 160 Universally Switched	
Stimulus	DC Voltage, $\pm$500V to 30 A AC Voltage, $\pm$200V, 45 Hz to 10 KHz, 50VA AC Signal, 0 – 3 MHz Pulse and Function, 0 – 5 MHz Synchro, 11.8 VRMS, 400 Hz Digital, dc to 1 MHz Up To 160 Bits Complex Waveforms – 3 Each	
Measurement	10MV – 500V at 0.05% Freq, 0.1 Hz – 300 MHz Synchro Angle Dig, dc – 1 MHz, 160 Bit Wide, 1024 Deep	
Oscilloscope	Manual Control	

TABLE 15. APX-72 AND APX-76 TEST SET CHARACTERISTICS

Unit	Function	Size (in.) H	W	D	Shipping WT (lb)
TS-1253/UP	Radar Test Set, APX-72	19.6	22.5	16.3	187
SM-197/UPM-98	Simulator, Coder				
TS-2336/APM-268	Radar Test Set, APX-76	17.5	21.5	11	54
ME-355A/APM-268	Multimeter	7	5	4	53
TS-5085/APM-512	Transponder Breakout Box	13.5	22.5	8	99

TABLE 16. UG2395BA01 CHARACTERISTICS

Unit	Characteristics
Mechanical	Approx 78 h x 92 x 48 d Inches WT, 5000 lbs
Building Blocks	Computer, Control Panel, Teletype, Printer, Tape Unit, Power and Signal Distribution
Simulus	DC-AC Generator 5 Signal Generators Function Generator Subcarrier Modulator Synchro/Resolver AC/DC Power Supplies Digital
Measurements	Frequency Computer Digital Voltmeter Digital

TABLE 17. S-3A EQUIPMENT DESIGN ATTRIBUTES

SYS/LRU	% BIT	Predicted Values % Tested	% TE Failures
STCU	12.0	86.9	2.2
DEICE/TIM	22.1	74.5	2.0
GCU	7.7	70.6	1.3
WTC	21.8	78.1	1.5
AACS	0.4	97.6	2.7
AFCS/GYRO	9.6	93.5	0.7
AFCS/FDC	16.3	98.2	3.0
HF/RT	10.7	88.5	1.5
HF/PA	8.8	87.9	1.0
HF/AC	8.2	88.3	1.3
UHF/RT	9.5	94.7	1.6
CC/ICS	4.8	96.3	0.9
CC/IRC	1.2	97.6	1.6
CC/SLU	4.9	90.8	3.5
DTS	5.8	99.1	1.8
FDIS/VDI	25.6	90.3	0.9
FDIS/HSI	1.7	89.0	1.1
FDIS/NDRC	5.2	94.8	2.3
DOPPLER	9.2	95.4	1.3
RAAWS/RT	10.6	96.1	2.2
RAAWS/IND	10.0	82.0	1.5
RIU	0.6	98.4	4.1
AHRS/GYRO	5.6	94.4	1.0
AHRS/CONV	3.3	96.4	1.4
SRS	4.4	94.9	2.9
ATR/TT	3.8	91.0	3.3
ATR/IU	5.8	86.0	0.8
SRX/RCVR	4.6	75.6	4.4
SRX/AMP	0	99.8	8.9
GPDC/PSI	14.1	75.7	1.1
GPDC/PS-CP	8.5	97.4	3.0
GPDC/PS-10	6.4	93.6	3.3
GPDC/PS-MEM	8.4	79.9	2.1
GPDC/PS2	14.1	75.7	8.8
TDS/TS	14.1	93.2	
TDS/DGU	1.4	98.6	
INSI/CONT	11.2	96.2	0.9
INSI/CONV	6.0	86.7	1.9
MAD/CONV	11.5	97.9	1.9
DMTU	13.1	93.7	1.6
DMTU/TTC	12.0	93.8	2.0

TABLE 18. TEST EQUIPMENT FAILURE RATE - PREDICTED

SYS/LRU	Design Run Time, R (min)	Elapsed Run Time RTE 2R + 0.5 (hrs)	FAILURE RATES λ_{BB} X 10^{-6}	λ_{ID} X 10^{-6}	λ_{MID} X 10^{-6}	λ_{TE} X 10^{-6}	% TE Fail Predicted
STCU	26	1.4	15,762	3.5		15,767	2.2
DEICE/TIM	38	1.8	11,595	3.0		11,598	2.0
GCU	19	0.8	16,571	1.2		16,572	1.3
WTC	19	0.8	19,304	3.0		19,307	1.5
AACS	29	1.0	27,344	7.5	84.2	27,436	2.7
AFCS/GYRO	7	0.6	12,523	3.1		12,526	0.7
AFCS/FDC	61	1.5	19,845	17.7		19,863	3.0
HF/RT	13	0.7	21,971	0		21,971	1.5
HF/PA	8	0.6	17,625	0.3		17,625	1.0
HF/AC	12	0.7	18,590	0.3		18,590	1.3
UHF/RT	9	0.7	22,887	0.9		22,888	1.6
CC/ICS	8	1.6	15,523	6.1		15,529	0.9
CC/IRC	32	1.0	15,523	0.6		15,524	1.6
CC/SLU	62	1.5	23,140	29.2	84.2	23,253	3.5
DTS	15	0.8	22,329	11.0		22,340	1.8
FDIS/VDI	7	0.6	15,935	0		15,935	0.9
FDIS/HSI	14	0.7	16,201	0		16,201	1.1
FDIS/NDRC	35	1.1	21,089	8.5	84.2	21,181	2.3
DOPPLER	14	0.7	18,692	0.1	84.2	18,776	1.3
RAAWS/RT	19	0.8	27,176	10.9	84.2	27,271	2.2
RAAWS/IND	10	0.7	21,807	0		21,807	1.5
RIU	49	1.3	31,527	6.1	84.2	31,617	4.1
AHRS/GYRO	11	0.7	14,657	0		14,657	1.0
AHRS/CONV	14	0.7	19,715	2.4	84.2	19,802	1.4
SRS	47	1.3	22,604	1.1	84.2	22,689	2.9
ATR/TT	54	1.4	23,477	6.3		23,483	3.3
ATR/IU	27	0.4	20,662	2.4	84.2	20,749	0.8
SRX/RCVR	92	2.0	22,245	9.4	84.2	22,339	4.4
INSI/CONT	8	0.6	15,189	1.3		15,190	0.9
INSI/CONV	28	1.0	19,145	3.4	84.2	19,233	1.9
MAD/CONV	15	1.0	19,406	4.5	84.2	19,495	1.9
DMTU	30	0.8	20,282	6.0	84.2	20,372	1.6
DMTU/TTC	30	1.0	20,282	6.0	84.2	20,372	2.0

% TE failures = λ_{TE}RTE x 100 $\qquad \lambda_{TE} = \lambda_{BB} + \lambda_{ID} + \lambda_{MID}$

SECTION 4

FIELD SURVEY RESULTS

The field survey portion of this study was performed to obtain data relating to the effectiveness of BIT in operation. The field survey requirement limited the study to consideration of systems in field duty and the results are based on use of three service data collection systems. Data for the S-3A, were obtained from the Maintenance Material Management (3M) system used to collect data on airborne equipment. The C-5A data were obtained from the Air Force's 66-1 system. Field data on the MK-86 radar fire control system were obtained from the surface Navy's collection system called Maintenance Data System (MDS).

The use of field data collected by these systems is subject to some hazard for engineering analysis as the data collection is not as exact as that collected during controlled studies. The benefit of using field data, however, is that it provides a realism and represents the user's actual experience and maintenance practices and his true maintenance cost.

4.1 MAINTENANCE DATA

The data collected during the survey included failures, maintenance action, and specific information related in the following paragraphs. The S-3A data collected were for calendar year 1977 and includes 59,720 flight hours. The C-5A data cover three-quarters of data from July 1977 through March 1978 and includes 36,290 flight hours. The MK-86 data collected cover 1 year from October 1977 through September 1978 and includes 50,622 hours of equipment operation.

The data collected and analyzed to characterize LRU BIT and BIT effectiveness are confined to the S-3A LRUs in the study. The C-5A data collected are used to evaluate the impact of a Central Integrated Test System (CITS) concept on system reliability. The MK-86 data are used to compare BIT reliability and maintenance time for rack-mounted equipment to airborne systems. In the following paragraphs, the S-3A LRU data are presented, followed by the test equipment data, the C-5A data, and MK-86 data.

4.2 S-3A LRU DATA

The data collected from the 3M system on LRU experience are presented in table 19. The data, as shown include the basic experience data as derived from computer outputs with the following explanations. The meantime-between-maintenance actions are total actions reported. The mean time between removal is total removals less removals for access to associated units and less removals for cannabalization. The maintenance man-hours per action are the total maintenance man-hours (MMH) charged for the period divided by the arithmetic average of the reported elapsed maintenance time for a given unit. The crew size and off line support contribute to the MMH, whereas, the EMT is the effective time of the maintenance action.

4.2.1 Can-Not-Duplicate

CND rates at organizational and intermediate levels of maintenance are directly affected by BIT and its effectiveness. At the intermediate level a CND is the result of maintenance at the organizational level which has used the fault detection and isolation capability of BIT to determine a faulty unit. Although other factors are present, a CND at intermediate level (CND_I) can be used as a measure of false removals due to BIT ineffectiveness, with decreasing CND resulting from more effective BIT.

At the organizational level the can-not-duplicate rate (CNDo) can be indicative of effective BIT. An effective BIT will aid the maintenance crew in eliminating false removals of good equipment when the operator reports discrepancies due to improper activation or other causes. However the same BIT may also be causing false alarms thus requiring additional maintenance. To isolate the effectiveness of BIT the organizational level CNDo system rates are used in developing BIT reported false alarms in 4.2.3 below by evaluating BIT versus operator discovered false alarms.

Table 20 presents experience data for the S-3A systems and LRUs. The CND rates are presented as percentages. Organizational level percentages are based on can-not-duplicate actions reported against a system level work unit code (WUC) plus the actions reported against the LRU work unit code divided by total system actions less cannibalization actions and removals for access to other equipment). The cannibalization actions and no defect removals were eliminated to provide only "hard" maintenance actions required to repair the avionics. For each system actions are reported against a system level WUC

and against each LRU within the system. The majority of can-not duplicate codes are reported against the system level WUC since the operator squawks are written against system operational problems rather than individual LRU's. Intermediate-level percentage is based on units which test OK at intermediate level divided by the total intermediate level inductions for the individual LRU. The field-design data analysis in section 5 uses the intermediate-level CND_I as a measure of BIT effectiveness.

4.2.2 Maintenance Time Distribution

Maintenance downtime minimization at the organizational level is one of the primary purposes for incorporating BIT in a system. The method selected for measuring BIT effectiveness is based on the distribution of elapsed maintenance time as reported by field data. Since maintenance time, as reported by the service commands, includes more than the actual touch time used to correct a discrepancy, the method of evaluating the data is critical to ensure satisfactory results. For this study, the reported maintenance times were accumulated in a histogram to determine percentage of maintenance exceeding fixed times. Table 21 presents one complete quarter's worth of data for a high-maintenance-action LRU. Figure 10 presents the equivalent histogram which is based on half-hour intervals. As previously done in the CND study, cannibalization actions have been excluded from this portion of the analysis.

In studying the reported charged maintenance time for use in evaluating BIT, an effectiveness criteria is required. The criteria needs to be related to BIT's purpose of low maintenance times. The measurement which best meets this is the percentage of maintenance actions exceeding a fixed time. Table 22 presents a summary of the distribution data. The value chosen for the correlation study was the percentage of maintenance exceeding 3 hours. This value was derived by considering a typical maintenance action and the range of charged maintenance times which result. For example:

Typical maintenance activity

Receive assignment	0.1
Travel aircraft	0.1
Turn on aircraft	0.1 to 0.3 (with and without power at the aircraft)
Run fault detection	0.1 to 0.3
Run fault isolation test	0.1 to 0.2
Remove unit	0.1 to 0.2

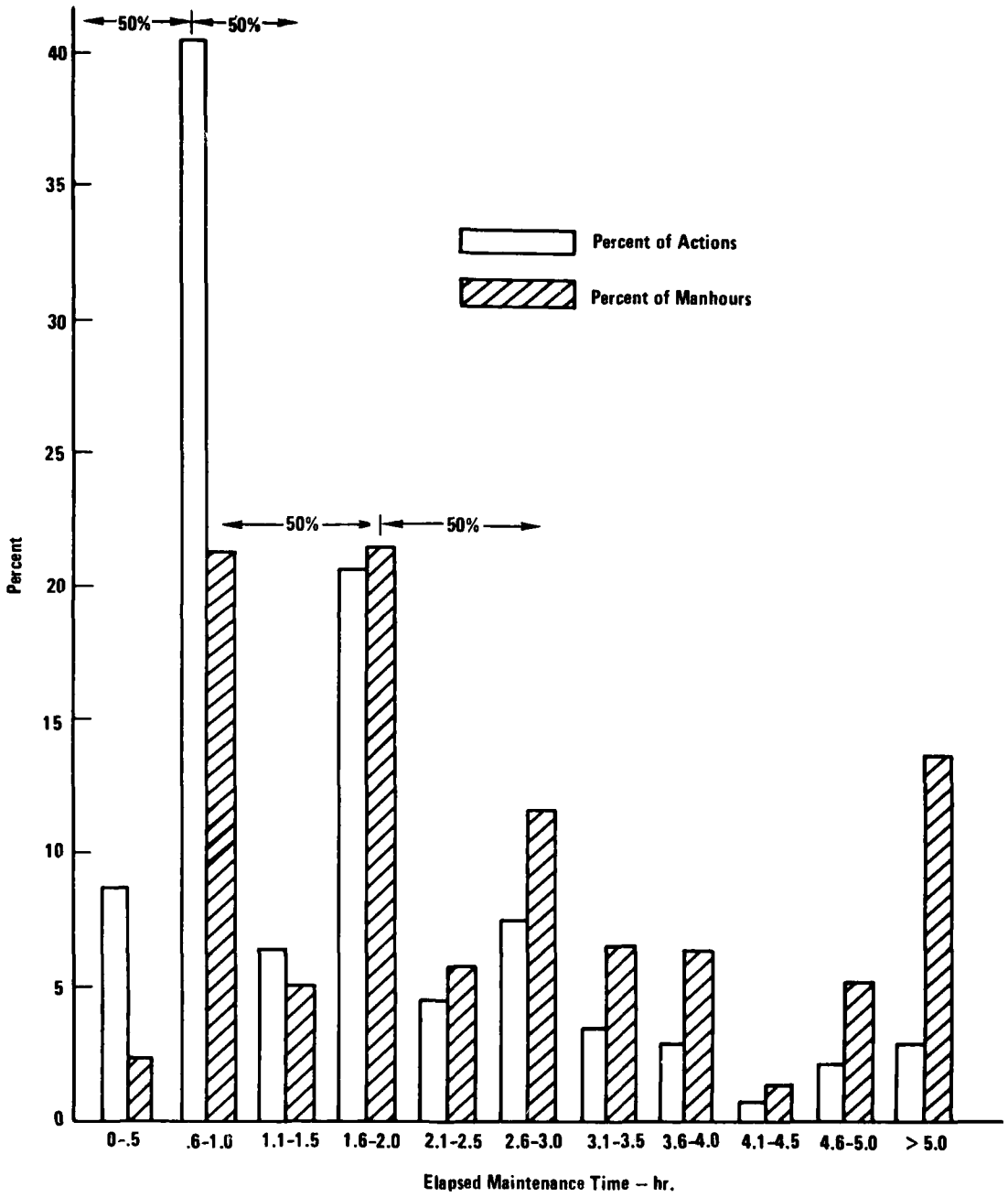

Figure 10. Maintenance Time Distribution - AFCS

Exchange unit for RFI unit	0.2 to 0.4 (times over 0.4 are charged to awaiting parts time)
Replace unit	0.1 to 0.2
Retest	0.2 to 0.3
Close out paperwork	0.2 to 0.4
Total	1.2 to 2.5 hours

This compares to charged times which have modes at 1 hour (simple actions such as a CND) and 2 hours (for an action which is corrected by removing and replacing a unit).

Since the data indicate a propensity to charge time at even hour increments and to allow a leeway for nonproductive time charged to the maintenance action, an over-3-hour (EMT_3) value was established as a criteria for excessive maintenance time. The EMT_3 limit results in a range of values which averages out to 11 percent of all LRU actions. This is a significant factor in total life-cycle costs, since these long elapsed maintenance times are 40 to 50 percent of all maintenance time expended.

4.2.3 BIT Versus Operator-Discovered False Alarms

The impact of BIT on the false alarm rate is the third factor studied to evaluate BIT effectiveness.

Squawks at the organizational level which cannot be verified indicate to some extent false alarms. Not all such squawks are false alarms. Some of the problems are related to intermittent failures while others are related to interactions between interconnected systems. To evaluate the false alarm impact system level CND rates were derived and a sampling plan was used to provide a differential between the CNDs reported by BIT and those reported by crews experiencing performance difficulties.

The sampling plan utilized maintenance action forms (MAF) which reported the crew's squawks and the resulting actions. A sample size of 25 was selected. The results of the sampling are shown in table 23 along with the system CND percentages reported previously in table 20.

The BIT reported false alarm rate in table 23 is the product of the system CND percentage and the percentage of CND squawks which were reported by BIT.

The MAFs available for the study did not provide an adequate sampling in all cases to meet the minimum requirement. This is indicated in the table. In the correlation study, these system values were not used.

4.2.4 BIT Field Reliability

Evaluation of the field reliability experience of the BIT itself is not possible without obtaining detailed repair data to the piece part level. Several approaches were tried to obtain a comparison between predicted BIT failure percentage and actual BIT failure percentage.

From the design analysis portion of the study, the cards containing BIT were identified. In some cases, the BIT was exclusively on a single SRU or several SRU's. In these cases, the BIT reliability could be measured by the percentage of intermediate-level repairs effected by replacement of the BIT SRU less SRU-level CNDs or:

$$\text{Field experience BIT(\%)} = \frac{\text{BIT card replacements} - \text{BIT card CNDs}}{\text{Total card actions} - \text{Total card CNDs}} \times 100 \qquad (11)$$

The resulting data is presented in table 24.

4.3 TEST EQUIPMENT

The experience data collected on the test equipment in this study consisted of reliability data for the units compared with the number of units tested. For the S-3A avionic systems additional data was collected to relate the test equipment experience to the basic characteristics of the prime equipment.

4.3.1 Test Equipment Reliability

The reliability of all of the test equipment is presented in table 25. The reliability is measured by TE failures divided by prime equipment failures including CND actions, or alternately TE repair per item tested.

Table 26 presents detailed data on the VAST test station. Table 27 is the experience data for the S-3A units tested by the VAST. In Table 27, LRU

maintenance time is used to develop composite BB failure rates applicable to testing the individual LRU. The formula used to obtain the experienced TE failures as a percentage of prime equipment failures is:

$$\text{Percent TE failures} = \text{Average Repair Time for the LRU} \times \text{sum failure rates of BBs utilized} \times 100 \quad (12)$$

The average intermediate-level repair time from the field data is included in the table instead of on station run time which is not reported. The average run time in practice is less than, but approaches, the charged maintenance time. This is due to the test equipment remaining on and operating during the test and fix part of the maintenance cycle. Some additional station run time occurs during station setup, but this is accounted for as part of the charged maintenance time.

The VAST BB reliabilities were obtained from the Thirteenth Reliability Report on VAST System, reference 1.

4.3.2 Non-Ready-For-Issue Units

The effectiveness of the S-3A TE in finding faults and allowing for their repair is indicated by the percentage of units issued which fail functional checks when installed in the aircraft. This rate is the not ready for issue (NON-RFI) rate. Table 28 presents the rate for the S-3A LRU's in the study. The number of units found non-RFI was obtained from the 3M data by using the when discovered code for non-RFI units and the how-malfunction code to eliminate units exhibiting mechanical damage. The devisor is the number of intermediate-level units tested less units sent to the depot level for repair.

4.3.3 Averaged Data

Data obtained on the S-3A LRU's tabulated by equipment characteristics on the averaging basis in section 5. Averaging data provides a quick reference for comparing the results of the various groupings in the study.

4.4 C-5A DATA

The C-5A data for the MADARS and the MADARS-tested avionics is presented in table 29. The data presents failure experience for the MADAR LRU's and tested avionics. The percent test equipment failure is the MADARS experience divided by the avionics experience including CNDs.

4.5 MK-86 DATA

The MK-86 data present maintenance data on units in which the BIT is used for manual isolation of faults within individual units or racks. The data are recorded in slightly different form than the aircraft data. The most important difference for this study is the recording of maintenance expenditures in whole hour increments. To compare maintenance times with S-3A data, a distribution of maintenance times was developed from the reported maintenance data and is presented in Table 30.

4.6 INDUCED FAILURES

One of the requirements of this study was to determine the extent of BIT and TE failures on inducing failures of the prime equipment. The normal design requirement for all of the equipments in the study was for the BIT and TE to fail without inducing secondary failures. The field data available from the service maintenance data systems do not provide an indication of this type problem. Therefore, unsatisfactory service reports were reviewed along with the design histories on the equipments. The review indicated that initially several of the units did induce failures in associated units by operation of the BIT. Redesign of the BIT corrected the problems before service introduction. The conclusion is that design criteria can be met but that test verification procedures for BIT design are essential. to fielding units that do not induce secondary failures.

TABLE 19. S-3A LRU DATA

SYS/LRU	Mean Time Between Maint Actions (flt hr)	Mean Time Between Removals (flt hr)	Maint Manhours Per Action (hr)	AV Maint Hours Per Action (O level)(hr)	Average Maintenance Time (O+I) (hr)
STCU	27	170	2.1	1.2	2.7
DEICE/TIM	562	1863	5.6	2.5	3.0
GCU	149	628	2.3	1.5	2.7
WTC	180	488	1.7	1.1	2.6
AACS	35	162	1.9	1.1	2.6
AFCS/GYRO	85	230	2.7	1.6	3.8
AFCS/FDC	26	227	2.4	1.4	3.0
HF/RT	327	1296	2.2	1.3	3.5
HF/PA	118	319	2.3	1.3	4.4
HF/AC	102	351	3.1	1.6	3.1
UHF/RT	57	258	1.5	2.5	3.1
CC/ICS	32	211	1.5	1.0	1.8
CC/IRC	35	198	1.5	1.0	2.1
CC/SLU	20	87	1.9	1.2	3.1
DTS	93	397	2.6	1.4	2.7
FDIS/VDI	125	387	2.3	1.4	1.8
FDIS/HSI	124	382	2.5	1.5	2.1
FDIS/NDRC	50	233	1.9	1.2	2.8
DOPPLER	145	469	2.9	1.5	2.7
RAAWS/RT	51	223	1.5	1.0	2.4
RAAWS/IND	121	395	1.5	1.0	1.4
RIU	81	292	2.4	1.4	3.9
AHRS/GYRO	119	267	3.3	1.9	3.1
AHRS/CONV	72	251	2.0	1.2	3.3
SRS	228	718	2.4	1.3	3.2
ATR/TT	93	385	2.5	1.3	2.7
ATR/IU	189	662	2.1	1.2	3.1
SRX/RCVR	159	655	1.8	1.1	2.2
SRX/AMP	864	6624	1.9	1.3	1.5
GPDC/PSI	1296	596	3.6	2.2	3.3
GPDC/PS-CP	774	3138	4.2	2.5	3.1
GPDC/PS-IO	501	2293	5.1	2.4	2.7
GPDC/PS-MEM	1296	4586	3.3	2.1	3.0
GPDC/PS2	1490	6624	3.3	1.9	2.9
TDS/TS	31	162	2.4	1.3	3.0
TDS/DGU	75	429	3.1	1.6	2.6
INSI/CONT	94	322	2.0	1.3	2.7
INSI/CONV	51	213	2.1	1.3	3.2
MAD/CONV	366	1046	2.0	1.2	2.9
DMTU	71	233	1.8	1.1	2.5
DMTU/TTC					3.9

TABLE 20. ORGANIZATION AND INTERMEDIATE LEVEL PERCENT CAN-NOT-DUPLICATE

System	LRU	Organizational Level CND_O – (%) System	Organizational Level CND_O – (%) LRU	Intermediate Level CND_I – (%)
Trim Control	STCU	–	5.8	11.3
DEICE	DEICE/TIM	–	2.1	18.6
Electrical	GCU	–	0.7	3.2
Air Frame	WTC	–	4.6	14.2
Airspeed-Act	AACS	13	4.9	7.5
AFCS	GYRO	–	0.5	19.6
AFCS	FDC		2.4	16.8
HF	RT	21	0.6	7.3
HF	PA		0	3.4
HF	AC		1.8	22.4
UHF	RT	20	3.3	0.4
CC	ICS	14	5.6	13.7
CC	IRC		1.7	5.5
CC	SLU		2.3	7.8
DTS	DTS	41	25.0	13.5
FDIS	VDI	17	3.8	33.6
FDIS	HSI		6.7	15.1
FDIS	NDRC		3.1	8.2
Doppler	Doppler	39	14.8	16.3
RAAWS	RT	18	1.9	13.5
RAAWS	IND		1.5	10.4
Radar	RIU	–	0.5	3.6
AHRS	GYRO	24	1.2	34.4
AHRS	CONV		0.7	10.4
SRS	RCVR	27	1.5	2.3
ATR	TT	24	7.0	11.1
ATR	IU		0.4	12.1
SRX	RCVR	11	2.6	2.5
SRX	AMP		1.5	–
TDS	TS	–	5.0	9.7
TDS	DGU		0.7	7.7
INSI	CONT	6	0.8	10.0
INSI	CONV		2.3	9.7
MAD	CONV	2	1.6	13.3
DMTU	DMTU	12	11.1	21.8
DMTU	TTC		1.3	4.3

TABLE 21. CHARGED MAINTENANCE TIMES - SAMPLE (AFCS)

Charged Elapsed Maintenance Time (hr)	Number of Occurrences	Time	Actions	Percent of Total Actions	Percent of Actions Exceeding Time	Maint Man Hours	Percent of Total Maint Man Hours	Percent of Maint Man Hours Exceeding
0					100			100
.1	0							
.2	0							
.3	2							
.4	0							
.5	16	0 - .5	18	8.8	91.2	8.6	2.2	97.8
.6	0							
.7	1							
.8	2							
.9	3							
1.0	77	.6 - 1.0	83	40.7	50.5	82.0	21.3	76.5
1.1	0							
1.2	0							
1.3	1							
1.4	0							
1.5	12	1.1 - 1.5	13	6.4	44.1	19.3	5.0	71.5
1.6	2							
1.7	1							
1.8	1							
1.9	1							
2.0	37	1.6 - 2.0	42	20.6	23.5	82.6	21.5	50.0
2.1	0							
2.2	0							
2.3	0							
2.4	1							
2.5	8	2.1 - 2.5	9	4.4	19.1	22.4	5.8	44.2
2.6	0							
2.7	0							
2.8	0							
2.9	0							
3.0	15	2.6 - 3.0	15	7.4	11.7	45.0	11.7	32.5
3.1	0							
3.2	0							
3.3	0							
3.4	0							
3.5	7	3.1 - 3.5	7	3.4	8.3	24.5	6.4	26.1
3.6	0							
3.7	0							
3.8	1							
3.9	0							
4.0	5	3.6 - 4.0	6	2.9	5.4	23.8	6.2	19.9
4.1	0							
4.2	0							
4.3	0							
4.4	0							
4.5	1	4.1 - 4.5	1	0.5	4.9	4.5	1.2	18.5
4.6	1							
4.7	0							
4.8	0							
4.9	0							
5.0	3	4.6 - 5.0	4	2.0	2.9	19.6	5.1	13.6
OVER 5.0	6	OVER 5.0	6	2.9	–	52.3	13.6	–

TABLE 22. ELAPSED MAINTENANCE TIME DISTRIBUTION

SYS/LRU	Average Maint Time (hr) All Actions	Average Maint Time (hr) Hard Actions	Elapsed Maint Time – % – Hard Actions Over 1 hr	Over 2 hr	Over 3 hr
STCU	1.3	2.5	61	31	20
DEICE/TIM	2.5	4.0	65	33	31
GCU	1.5	2.7	63	30	23
WTC	1.1	1.6	48	18	7
AACS	1.1	2.0	57	27	13
AFCS/GYRO	1.6	2.7	76	48	28
AFCS/FDC	1.4	2.2	57	29	18
HF/RT	1.3	2.2	58	31	16
HF/PA	1.3	2.2	77	37	14
HF/AC	1.6	2.7	80	51	27
UHF/RT	0.9	1.5	44	13	5
CC/ICS	1.0	1.1	22	5	3
CC/IRC	1.0	1.3	33	9	3
CC/SLU	1.2	1.7	54	20	17
DTS	1.4	1.6	51	20	11
FDIS/VDI	1.4	1.9	58	24	9
FDIS/HSI	1.5	1.9	54	22	10
FDIS/NDRC	1.2	2.0	54	27	14
DOPPLER	1.5	2.1	62	28	14
RAAWS/RT	1.0	1.5	47	13	5
RAAWS/IND	1.0	1.4	37	11	6
RIU	1.4	2.4	72	38	17
AHRS/GYRO	1.9	3.0	79	48	30
AHRS/FDC	1.2	2.0	55	28	13
SRS	1.3	2.1	73	37	13
ATR/TT	1.3	2.0	62	28	15
ATR/IU	1.2	2.1	74	36	13
SRX/RCVR	1.1	1.9	57	23	12
SRX/AMP	1.3	2.9	73	53	40
TDS/TS	1.3	1.8	52	23	11
TDS/DGU	1.6	2.2	55	29	20
INSI/CONT	1.3	2.1	57	29	13
INSI/CONV	1.3	2.3	59	30	6
MAD/CONV	1.2	1.9	73	26	8
DMTU	1.1	1.6	48	13	5
DMTU/TTC	1.2	1.4	53	15	2

Note: 1. Hard actions include repairs and remove replace actions.

2. All actions include hard actions plus cannibalizations, removal for access, and can-not-duplicate actions.

TABLE 23. SYSTEM CAN-NOT-DUPLICATE RESULTS

Sample Study Results

SYS/LRU	No. of Maintenance Action Forms	% Operator Reported	% BIT Reported	CND_0 %	% CND_0 X BIT Reported
AACS	25	76	24	13	3.1
HF	25	72	28	21	5.9
UHF	25	96	4	20	0.8
CC	25	76	24	14	3.4
DTS	25	72	28	41	11.5
FDIS	25	80	20	17	3.4
DOPPLER	25	68	32	39	12.5
RAAWS	25	96	4	18	0.7
AHRS	25	64	36	24	8.6
SRS	25	80	20	27	5.4
ATR	25	56	44	24	10.6
SRX	11	55	45	11	*
INSI	16	62	38	6	*
MAD	1	0	100	2	*
DMTU	4	75	25	12	*

*Insufficient Data for Correlation

TABLE 24. FIELD RELIABILITY EXPERIENCES OF BIT

SYS/LRU	% Built-In Test - Design	Individual BIT SRU	% Built-In Test Failures - Experience
STCU	12	A4	4.8
DEICE/TIM	22.1	A3	47.1
WTC	21.8	A3	18.8
FDIS/NDRC	5.2	A10, 11, 12 A31, 32	5.3
AHRS/GYRO	5.6	A3	12.9
ATR/TT	3.8	A5	7.6
ATR/IU	5.8	A28	2.6
SRX/RCVR	4.6	A34	8.0
TDS/TS	14.1	A1	6.7
TDS/DGU	1.4	A37, 38	5.9

TABLE 25. TEST EQUIPMENT RELIABILITY

Test Equipment	Program	Data Source	TE Reliability — % of Prime Equip
VAST AN/USM-247(AS)	S-3A	NAEC-MISC-92 -0368 9/1/78 Thirteenth Reliability Report - VAST	4.7
HATS AN/USM-403(AS)	S-3A	North Is. - USN Shop Records Lockheed Maint. Records	8.5
Special Purpose Tester BD-01	S-3A	North Is. - USN Shop Records	7.8
UG 2395BA01 ATE	C-5A	66-1 and Travis AFB Data	17.7
APX-72/76 Tester	S-3A/P-3C	Lockheed Shop Data	2.4

APX-72/76 Tester reliability adjusted to account for use of unit to test non-failed units in a receiving inspection function by

$$\frac{\text{Run time failed unit}}{\text{Run time good unit}} = \frac{1.5\text{ hr}}{.25\text{ hr}} = 6$$

experienced failure percent = 0.4%
adjusted failure percent = 2.4%

TABLE 26. VAST BUILDING BLOCK RELIABILITY

Building Block Identification No.	Building Block Name	MTBF Pred.	MTBF EXPER
01	Interface & Config. Switch	450	1493
04	Control Switch	1500	2600
10	Digital Multimeter	2500	2038
11	Freq & Time Interval Meter	2600	1605
13	Delay Generator	3300	1241
14	Digital Subsystem	200	717
20	Sig. Gen 0.1 Hz - 50 kHz	1400	1827
21	Sig. Gen 10 kHz - 40 MHz	1000	486
22	Sig. Gen 20 MHz - 500 MHz	800	124
25	Sig. Gen 0.4 GHz - 12 GHz	325	170
30	Servo Analyzer	750	400
31	Synchro/Resolver Std.	950	604
33	Phase Sensitive Voltmeter	2500	467
34	Pressure Gen.	1500	94
36 (2 ea)	Arbitrary Function Gen.	800	5966
38	Low Freq. Wave Analyzer	520	1064
40	Pulse Gen.	1300	1049
45	RMS Voltmeter	2500	678
48	Programmable Dig R/O Oscilloscope	179	293
49	Ratio Transformer	2500	2446
50 (3 ea)	Low Voltage d.c. Power Supply	600	2476
51	DC Power Supply 22 - 32V	1500	3415
52 (2 ea)	DC Power Supply 30 - 500V	1000	2556
53	DC Power Supply 0.5 - 1kV	1500	219
55	AC Power Supply	1000	2151
57	RF Spectrum Analyzer	750	235
61	Precision Resistance Load	1500	11887
62	High Power Resistance Load	3000	2673
CMPTR	Computer - Varian 622i	1500	1705
DTU	Data Terminal Unit	660	2092
MTTU (2 ea)	Magnetic Tape Units	1500	1599

TABLE 27. LRU-VAST RELIABILITY FIELD EXPERIENCE

SYS/LRU	Intermediate Av. Maint Time EMT_I – hr	VAST and ID Summary λ_{TE}	% Test Equipment Failures Actual
STCU	3.9	0.013068	5.1
DEICE/TIM	1.8	0.008167	1.5
GCU	3.0	0.009007	2.7
WTC	3.2	0.010802	3.5
AACS	3.2	0.027888	8.9
AFCS/GYRO	2.4	0.006839	1.6
AFCS/FDC	5.9	0.015892	9.4
HF/RT	2.1	0.013149	2.8
HF/PA	3.3	0.010360	3.4
HF/AC	4.2	0.010141	4.3
UHF/RT	3.5	0.023130	8.1
CC/ICS	2.6	0.007604	2.0
CC/IRC	3.3	0.007807	2.6
CC/SLU	3.8	0.014247	5.4
DTS	3.2	0.012618	4.0
FDIS/VDI	3.0	0.008453	2.5
FDIS/HSI	4.1	0.008632	3.5
FDIS/NDRC	3.3	0.013872	4.6
NAV/DOPPLER	3.3	0.012110	4.0
RAAWS/RT	3.7	0.020823	7.7
RAAWS/IND	2.8	0.011915	3.3
RADAR/RIU	3.7	0.021397	7.9
AHRS/GYRO	3.8	0.010624	4.0
AHRS/CONV	3.1	0.014267	4.4
SRS	3.4	0.024751	8.4
ATR/TT	4.7	0.011911	5.6
ATR/IU	3.7	0.016126	6.0
SRX/RCVR	1.4	0.025599	3.6
SRX/AMP	3.8	0.017821	6.8
GPDC/PSI	2.7	0.010947	3.0
GPDC/PS-CP	3.2	0.007299	2.3
GPDC/PS-IO	2.5	0.007299	1.8
GPDC/PS-MEM	4.3	0.007299	3.1
GPDC/PS2	3.1	0.010947	3.4
INSI/CONT	3.7	0.007889	2.9
INSI/CONV	3.4	0.013787	4.7
MAD/CONV	2.6	0.012729	3.3
DMTU/DMTU	2.5	0.012748	3.2
DMTU/TTC	3.9	0.012748	5.0

VAST and ID Summary includes MID Failures

TABLE 28. NON-RFI UNITS

SYS/LRU	No. of Non-RFI Units	Total Units	% Non-RFI
STCU	6	291	2.1
DEICE/TIM	0	35	0.0
GCU	3	86	3.5
WTC	5	64	7.8
AACS	12	315	3.8
AFCS/GYRO	3	258	1.2
AFCS/FDC	9	436	2.1
HF/RT	0	47	0.0
HF/PA	1	171	0.6
HF/AC	9	131	6.9
UHF/RT	4	189	2.1
CC/ICS	1	268	0.4
CC/IRC	15	260	5.8
CC/SLU	24	603	4.0
DTS	2	141	1.4
FDIS/VDI	4	58	6.9
FDIS/HSI	2	27	7.4
FDIS/NDRC	1	239	0.4
DOPPLER	9	128	7.0
RAAWS/RT	7	223	3.1
RAAWS/IND	0	23	0.0
RIU	4	198	2.0
AHRS/GYRO	4	125	3.2
AHRS/CONV	2	216	0.9
SRS	2	64	3.1
ATR/TT	2	140	1.4
ATR/IU	0	73	0.0
SRX/RCVR	0	56	0.0
SRX/AMP	0	3	0.0
TDS/TS	3	339	0.9
TDS/DGU	4	101	4.0
INSI/CONT	3	160	1.9
INSI/CONV	2	224	0.9
MAD/CONV	0	48	0.0
DMTU	6	232	2.6

TABLE 29. C-5A FIELD DATA

Work Unit Code	SYS/LRU	Maint Actions Per 1000 hrs
51A00	Bearing - Distance - Heading Indicator (BDHI), HSI, Attitude	
51B00	Central Air Data Computer	42.877
51C00	Computer, Analog, Energy Management	0.193
52A00	Computer, Pitch/Roll/Yaw/PACS Autopilot (AFCS)	37.724
52E00	Go-Around Attitude System	7.468
52G00	Angle of Attack	5.236
52J00	Pitch Augmentation Computer	18.655
52L00	Automatic Throttle Computer	1.047
52N00	Stall limiter Computer	13.613
52P00	Active Lift Distribution Control Computer	9.149
61A00	HF/SSB Comm	35.823
62A00	VHF Comm	4.188
62C00	VHF/FM Comm	0.331
63A00	UHF Comm	22.486
64A00	Intercomm Unit	32.461
64C00	Winch Control/Intercomm	1.984
64E00	Public Address	0.964
65A00	Transponder	6.613
66A00	Beacon, CDPIR	13.530
71A00	Automatic Direction Finder	2.094
71C00	LORAN	12.813
71E00	Marker Beacon	0.551
71G00	Glideslope Radio	2.948
71J00	VHF Navigation VOR/LOC	9.259
71L00	TACAN	20.915
72A00	Inertial Doppler Computer (IDNE)	44.365
72B00	Doppler Radar (IDNE)	41.664
72C00	D/A Conv (IDNE)	3.500
72D00	Multi-Mode Radar	51.722
72E00	Radar Beacon	0.276
72F00	Station Keeping Equipment	0.220
72G00	Radar Altimeter	15.652
	36,290 Flight Hours	
		TOTAL 536.981

MADARS

55AA0	Automatic Sig Acquisition Unit (SAR-A)	0.263
55AC0	Automatic Sig Acquisition Unit (SAR-M)	0.028
55AE0	Maintenance Data Recorder (MDR)	3.803
55AG0	Control Sequencer Unit (CSU)	8.129
55AJ0	Oscilloscope and Digital Readout Unit (ODRU)	8.845
55AL0	Central Multiplex Adapter (CMA)	4.905
55AR0	Printout Unit (POU)	8.322
55AT0	Manual Multiplexer (MMUX)	3.334
55AV0	Digital Computer (DCOMP)	10.774
55AY0	Data Retrieval Unit (DRU)	14 228
	TOTAL	63.228

TABLE 30. MK-86 MAINTENANCE DATA

Unit No.	Description	Maintenance Time Distribution – Sample: Number of Actions 1 hr	2 hr	3 hr	4 hr	5 hr	6 hr	7 hr	>7 hr	Total	Average Maint Time (hr)
6	Signal Data Translator	10	6	3				1		20	1.9
10	Radar Receiver	5	5	5		1		1	3	20	3.8
11	Electronic Freq Control	3	3	5	4					15	2.5
12	Radar Transmitter	1	2	1	1				2	7	6.3
13	Radar Antenna			1			1	1	1	4	6.5
17	Radar Antenna	2		1						3	1.6
18	Radar Receiver	8	3	1	1				1	14	2.1
19	Radar Transmitter	1	4	3	1	1	1	1		12	3.3
21	Antenna Control	2	1		1	2				6	3.0
22	Signal Data Converter	2	2	1					1	6	2.5
23	Power Distr Control	2								2	1.0
25	Video Processor	4	9	1				1		15	2.1
	Total	40	35	22	8	4	2	5	8	124	
	Percent	32.3	28.2	17.7	6.5	3.2	1.6	4.0	6.5	100	

SECTION 5
EVALUATION OF RESULTS

The design data presented in section 3 and the field results presented in section 4 present a wide range of data for evaluation. The approach followed was to compare basic BIT and design characteristics with the BIT AND TE design attributes and effectiveness measures. For these comparisons, the data were grouped and the comparisons made based on averages and correlation coefficients between parametric pairs. Further comparisons were then made based on a generalized least-squares, curve-fitting technique in an effort to develop equations for trade off purposes. To further analyze the data, a stepwise multiple linear correlation study was performed, sequenced to provide predictor equations applicable to different stages of the design process.

5.1 REGRESSION ANALYSIS

A generalized regression analysis was used to evaluate the data developed during the study. The data was analyzed using the comparator program Statistical Package for the Social Sciences (SPSS) eighth edition, Reference 2.

5.1.1 Linear Regression Analysis

The S-3A correlation data was separated into two sets to allow a separate analysis of system characteristics and Line Replaceable Unit (LRU) characteristics. Appendix A presents the Pearson Product moment correlation coefficient, symbolized by R. Due to low correlation, this data was not used to evaluate BIT.

5.1.2 Data Quality

5.1.2.1 Data Censoring

Due to equipment characteristics and data completeness, some points were removed from the correlation study. The removal was based on the quality of the field data and is explained below.

Both of the LRU BIT effectiveness measures require a reasonably sized sample of activities at organizational and intermediate-levels to develop the parameters. The sonobuoy receiver amplifier and all of the power supplies studied exhibited high reliabilities, such that the few activities during the year did not provide a data base large enough to establish the maintenance time distribution or the intermediate-level CND rate.

Four LRUs were dropped from the evaluation of maintenance time distributions due to their installations which required considerable extra effort for removal when compared to the standard design practice which installed the units in racks with quick release hold-downs and rear plug-in connectors. The HF antenna coupler is installed in the tail of the S-3A and requires removal of a panel to gain access. The AFCS gyro is installed in the weapons bay and is bolted to the structure. The AHRS gyro is located in the interior of the aircraft under a step and is also bolted in place. The deice timer is located in the electric load center and is bolted in place with difficult access.

Three units were eliminated from the intermediate-level CND rate study. Two units, the AHRS gyro and VDI, were known to have incompatabilities with the VAST station which result in CNDs when the problem is related to measuring small angular changes in the servo mechanism of the units. The HF antenna coupler during the time frame of the study exhibited a pattern time degradation failure mode, which was undetectable by VAST and was undergoing corrective action at the time.

5.1.2.2 Data Validation

Figure 11 shows the correlation of the design attribute percent Built-In-Test (BIT) based on Mil-Hdbk-prediction to the actual failure percentage for the LRUs with dedicated BIT submodules (SRUs). An approximate one-for-one and a quarter comparison is shown with a correlation of 72% (R^2 = .51)*. thus concluding that percent failure rate predictions can be used to evaluate BIT trends.

* coefficient of determination

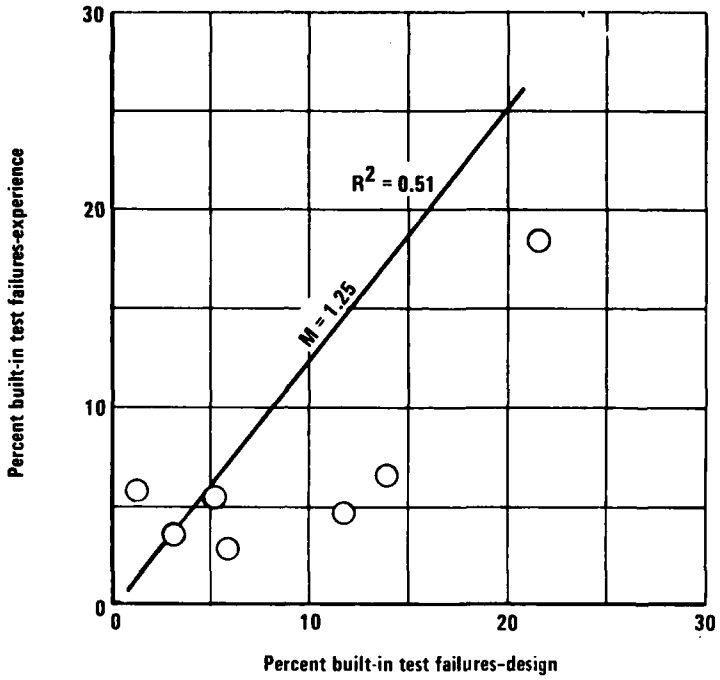

Figure 11. Percent built-in-test failures-design versus percent built-in-test failures-experience.

5.2 CURVE FITTING STUDY

The S-3A data were used in a computer study to provide best fit curves to develop design trade-off equations. The analysis utilized a least-squares fit for 72 1st and 2nd order equations. The standard deviation about the curve is calculated for each of the equations and a ranking is provided based on the smallest standard deviation. The method of cubic splines is employed by the computer analysis.

The 72 equations are based on polynomials of the independent parameter and forms of X. For each form of the polynomial, two orders are calculated. For example, for the first two equations the polynomial of x is calculated with the equations being in order:

1. $$y = A_o + A_1(x) \tag{13}$$

2. $$y = A_o + A_1(x) + A_2(x)^2 \tag{14}$$

For each of the equations, the coefficients are obtained. The forms of the polynomial used are shown in table 31.

The results did not provide meaningful curves as the data were too scattered to obtain equations useful for trade-off purposes. Since both linear regressions (shown in Appendix A) and the curve fitting technique did not correlate, multiple linear regression was used to evaluate the BIT attributes.

TABLE 31. CORRELATION EQUATIONS

Equations	Polynominal Form
1 – 2	$y = P(x)$
3 – 4	$y = P(1/x)$
5 – 6	$y = P(\ln x)$
7 – 8	$y = P(1/\ln x)$
9 – 10	$y = P(e^x)$
11 – 12	$y = P(e^{1/x})$
13 – 14	$y = 1/P(x)$
15 – 16	$y = 1/P(1/x)$
17 – 18	$y = 1/P(\ln x)$
19 – 20	$y = 1/P(1/\ln x)$
21 – 22	$y = 1/P(e^x)$
23 – 24	$y = 1/P(e^{1/x})$
25 – 26	$y = e^{P(x)}$
27 – 28	$y = e^{P(1/x)}$
29 – 30	$y = e^{P(\ln x)}$
31 – 32	$y = e^{P(1/\ln x)}$
33 – 34	$y = e^{P(e^x)}$
35 – 36	$y = e^{P(e^{1/x})}$
37 – 38	$y = e^{1/P(x)}$
39 – 40	$y = e^{1/P(1/x)}$
41 – 42	$y = e^{1/P(\ln x)}$
43 – 44	$y = e^{1/P(1/\ln x)}$
45 – 46	$y = e^{1/P(e^x)}$
47 – 48	$y = e^{1/P(e^{1/x})}$
49 – 50	$y = \ln P(x)$
51 – 52	$y = \ln P(1/x)$
53 – 54	$y = \ln P(\ln x)$
55 – 56	$y = \ln P(1/\ln x)$
57 – 58	$y = \ln P(e^x)$
59 – 60	$y = \ln P(e^{1/x})$
61 – 62	$y = 1/\ln P(x)$
63 – 64	$y = 1/\ln P(1/x)$
65 – 66	$y = 1/\ln P(\ln x)$
67 – 68	$y = 1/\ln P(1/\ln x)$
69 – 70	$y = 1/\ln P(e^x)$
71 – 72	$y = 1/\ln P(e^{1/x})$

5.3 Multiple Regression Analysis

The second phase of the regression analysis involved utilizing a stepwise multiple regression. In the analysis for each dependent parameter a set of predictor or independent parameters are established. The computer then selects the best predictor based on correlation coefficient and enters it in the analysis determining the y axis intercept and slope of the best fit line. The program then recalculates the correlation coefficients and

selects the second best predictor from among the remaining variables calculating a new y axis intercept and slopes for the parameters entered. The process continues until either all the parameters are entered or a preset tolerance on a goodness of fit or F ratio test is met, or a tolerance index T which is the tolerance on the minimum change in the multiple correlation coefficient R is met. The values used in the analysis are F = 0.01 and T = 0.001. During the regression, the standard error (3) is checked at each step in insure that the value continues to decrease. When the standard error increases, the coefficients of the regression at that step are used.

The analysis was conducted using three sets of independent parameters based on the type of data available during progressive iterations in the design process. In general during early design phases only rough estimated characteristics are known such as weight, numbers of LRUs in the system and power. As the design develops additional data on number of components and number of SRUs in the LRU is developed. During final stages of the design exact data is available including component breakdowns sufficient to calculate failure modes. In addition to the equipment characteristics the information on type equipment, BIT type, BIT interaction, method of activation and evaluation and operator intervention were accounted for by introduction of dummy variables. Since several of the parameters overlapped, in cases where the BIT had several characteristics, the dummy variable was assigned based on the predominant characteristics. For instance the flight data computer utilizes both comparison monitor and signal monitor BIT, with the main type being comparison monitor, so the dummy variable was assigned to the comparator monitor characteristic.

The multiple regression results are presented in tables 32 and 33. Table 32 presents the coefficients of determination that result when the independent parameters include weight, power, equipment type, BIT type etc. Table 33 presents the coefficients for the terms in the resulting linear equations.

TABLE 32. SUMMARY OF MULTIPLE REGRESSION ANALYSIS

Dependent Parameter	Coefficient of Determination, R^2 Values		
	Initial Design Phase	Advanced Design Phase	Final Design Phase
% Bit	0.46*	0.45*	0.46*
% Tested by BIT	0.47*	0.55	0.55
% Test Eq Failures	0.76	0.82	0.89
% Total Failures	0.34*	0.42*	0.42*
Average Maint Time	0.54	0.57	0.57
% Cannot Duplicate at Intermed. Level	0.28*	0.27*	0.27*
% Non-RFI at Org Level	0.11*	0.14*	0.31*

Notes:

1. * Low Correlation

2. Design Phase Parameters:
   - Initial: Weight, Power, No. of LRU's, Equip. Type, BIT Type, Activation
   - Advanced: Initial Design Parameters Plus No. of SRU's and Components
   - Final: Advanced Design Parameters Plus Failure Modes

3. R^2 = Coefficient of Determination

$$= \frac{\text{Explained Variance}}{\text{Total Variance}}$$

TABLE 33. REGRESSION EQUATIONS - TERM COEFFICIENTS

Characteristic		Dependent Variables: % Tested By BIT	% Test Equip Failures	Average Maint Time - Hrs
		Initial Design Phase		
Constant		Note 3	6.35	0.90
Weight, Pounds			-	0.0045
Power, Watts			0.0057	-0.00068
No. of LRU Per System			-0.33	0.067
Eq Type	Electromech, PS (2)		-	-
	Analog		-0.87	0.43
	Digital		-	0.25
	RF		-	0.20
BIT Type	Comparator (2)		-	-
	Wraparound		-2.67	-
	Signal Monitor		-2.49	-
Activation	Manual (2)		-	-
	Computer		0.87	-
R^2		0.47	0.76	0.54
		Advanced Design Phase		
Constant		96.1	6.0	0.88
Weight, Pounds		-	-0.020	0.0062
Power, Watts		-	0.0057	-0.00071
No. of LRU Per System		-0.59	-0.35	0.070
No. of Components		0.00075	0.00019	-
No. of SRU Per LRU		-	0.032	-0.0047
Eq Type	Electromech, PS (2)	-	-	-
	Analog	-8.88	-1.28	0.48
	Digital	-	-0.58	0.35
	RF	-	-	0.24
BIT Type	Comparator (2)	-	-	-
	Wraparound	-	-2.41	-
	Signal Monitor	-4.20	-1.83	-
Activation	Manual (2)	-	-	-
	Computer	-	0.89	-
R^2		0.55	0.82	0.57

Notes:

1. To compute BIT attribute, use coefficients in vertical column multiplied by predicted equipment characteristic. Sum result.
2. Coefficients for equipment type, BIT type, and activation are zero unless noted. Choose only one coefficient for each set.
3. Low correlation; equation not usable as a predictor.

TABLE 33. REGRESSION EQUATIONS - TERM COEFFICIENTS (Continued)

Characteristic		% Tested By BIT	% Test Equip Failures	Average Maint Time - Hrs
		Dependent Variables		
		Final Design Phase		
Constant		96.1	6.29	0.88
Weight, Pounds		-	-0.026	0.0062
Power, Watts		-	0.0056	-0.00071
No. of LRU Per System		-0.59	-0.37	0.070
No. of Components		0.00076	-0.00014	-
No. of SRU Per LRU		-		-0.0047
Failure Modes		-	-0.00016	-
Eq Type	Electromech, PS (2)	-	-	-
	Analog (2)	-8.88	-1.17	0.48
	Digital (2)	-	-2.11	0.35
	RF (2)	-	-	0.24
BIT Type	Comparator (2)	-	-	-
	Wraparound (2)	-	-2.25	-
	Signal Monitor (2)	-4.20	-1.74	-
Activation	Manual (2)	-	-	-
	Computer (2)	-	0.77	-
R^2		0.55	0.89	0.57

Notes:

1. To compute BIT attribute, use coefficients in vertical column multiplied by predicted equipment characteristic. Sum result.
2. Coefficients for equipment type BIT type, and activation are zero unless noted. Choose only one coefficient for each set.
3. Low correlation; equation not usable as a predictor.

5.4 S-3A DATA ANALYSIS

The S-3A data and related measures are evaluated in the following paragraphs based on the means and standard deviations of the data.

5.4.1 System Design Data

The system design characteristic of percent BIT and percent tested, and the effectiveness measure of organizational level can-not duplicate (total) and BIT discovered are present below:

	Mean	Standard Deviation
Percent BIT	7.2	3.4
Percent Tested	93.8	3.4
Can-not duplicate percent (total)	19.2	10.8
Can-not duplicate percent-BIT discovered	6.0	4.2

The data indicates that only 1/3 of organization level can-not duplicate activity is actually related to BIT reports. The remainder is associated with crew squawks based on operational anomolies.

5.4.2 BIT Design Attributes

The percent BIT and percent tested data is present below for all equipments in the study and by equipment type.

	Percent BIT	Std Dev	Percent Tested	Std Dev
All Equipment	8.8	5.8	90.8	7.6
Analog	14.3	6.4	83.9	10.0
Digital	5.2	4.3	94.9	3.9
Radio Frequency	7.2	3.8	94.1	4.0
Electromechanical	8.3	6.3	92.0	4.5
Power supplies	10.3	3.6	83.5	8.9

The data indicates the relative efficiency of BIT design in digital units, which require less BIT to obtain higher percent tested. Examining averages for each figure shows that analog LRUs have higher percentage of BIT and lower percent tested than digital equipment, with RF and electromechanical LRU's in between the two extremes. Power supplies conform roughly to the analog attributes.

5.4.3 Effectiveness Measures

The BIT effectiveness measures of percent can-not duplicate at I level and percent elapsed maintenance time exceeding 3 hours are presented below. The data indicates that BIT is more effective in eliminating false removal (CND_I) on RF equipment. With BIT being more effective in reducing excessive maintenance time on the electromechanical units.

	Percent Can-not Duplicate I level	Std Dev	Percent EMT Exceeding 3 hours	Std Dev
All Equipment	9.6	5.1	11.8	5.5
Analog	11.2	4.6	15.3	6.0
Digital	10.4	5.0	13.4	4.5
Radio Frequency	6.5	6.1	11.3	4.5
Electromechanical	10.0	4.0	7.4	5.3

5.4.4 Built-in Test Characteristics

Built-in test characteristics were evaluated in three categories.

- BIT design - (Circuitry)
- type of activation
- type of evaluation

The data below compares the percent BIT, percent tested by BIT and the effectiveness of BIT as measured by percent CND_I and percent EMT exceeding 3 hours.

	Percent BIT	Std Dev	Percent tested by BIT	Std Dev	Percent Can-not Duplicate I-Level	Std Dev	Percent EMT Exceeding 3 hours	Std Dev
BIT Design								
Comparator	9.6	6.7	94.1	5.2	11.8	4.7	17.0	3.6
Wraparound	5.6	3.8	95.7	3.4	9.7	4.4	10.8	4.7
Signal Monitor	9.1	5.2	90.3	7.4	9.7	5.3	12.3	5.3
Interactive BIT	8.3	3.8	89.2	7.7	9.9	3.9	13.5	6.1
BIT Activation								
Manual	12.1	7.0	89.6	7.2	12.2	3.1	12.7	5.4
Computer	5.9	4.1	94.6	3.5	9.0	5.2	11.8	5.5
BIT Evaluation								
Operator	10.0	6.8	90.0	6.3	10.1	3.7	10.7	6.1
Computer	5.9	4.1	94.7	3.6	9.5	5.0	11.4	5.4
Internal Software	6.7	6.8	95.4	3.4	10.1	4.5	15.5	2.4
Manual Intervention	8.6	6.2	91.7	4.7	8.8	4.2	11.1	6.2
Overall Averages	8.6	5.8	90.7	7.5	9.6	5.1	11.8	5.5

Figure 12 shows the graphical relationship of these characteristics.

The results indicate that of the BIT design type, wraparound BIT is superior in all categories. It requires the least amount of BIT and at the same time tests a higher percent of the unit. This is reflected in the effectiveness measures with the lowest CND rate and lowest excessive maintenance time.

Computer activation produces superior results over manual activation in all four categories.

The type of evaluation produced mixed results and depends on the weight of maintenance effectiveness with respect to BIT design attributes. Based on percent of excessive maintenance, operator evaluation is the most effective, with manual intervention and computer evaluation slightly less. Based on I-Level CNDs manual intervention is best with computer evaluation second. With respect to design attributes, the percent of BIT and tested by BIT are best for a computer evaluation.

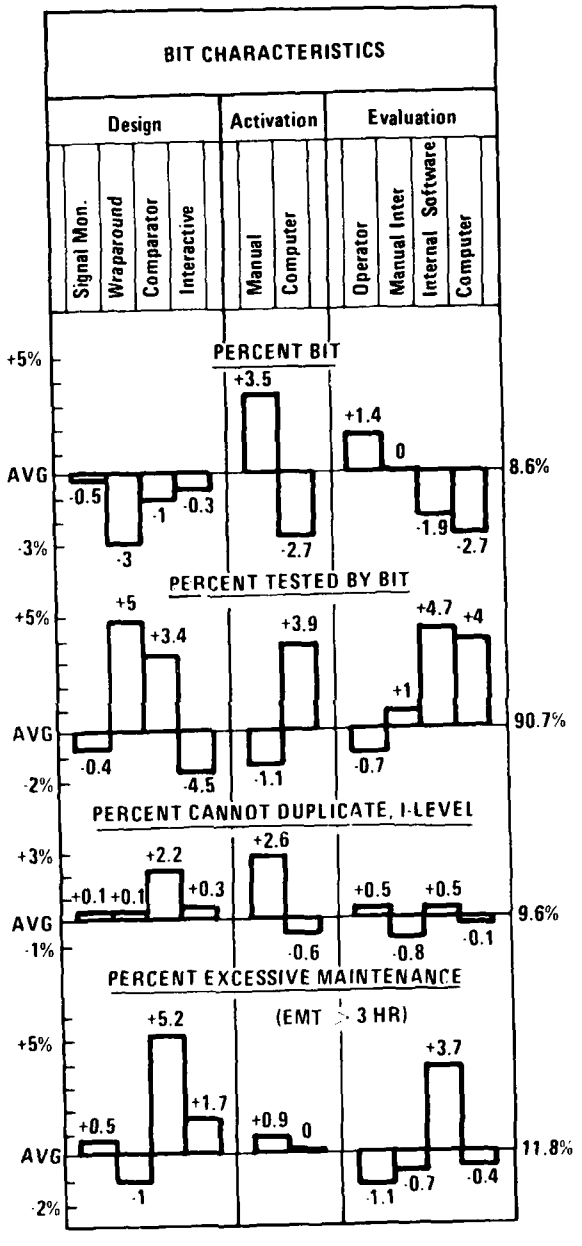

Figure 12. BUILT-IN-TEST Characteristics

5.5 TEST EQUIPMENT DATA

The reliability of the test equipment in this study and the effectiveness of a selected sample of the test equipment is analyzed in the following paragraphs. The reliability of the test equipment as related to prime equipment is the parameter of greatest significance considered for the developers of new systems.

5.5.1 S-3A Automatic Test Equipment

The data on VAST tested LRU's is presented below by prime equipment type and combined for all the units in the study.

	Percent Test eq failures Design	Std Dev	Percent Test eq failures Experience	Std Dev
All equipment	1.9	1.0	4.5	2.2
Analog	1.8	0.8	4.7	2.8
Digital	2.4	0.9	5.2	2.0
Radio Frequency	2.1	1.2	5.4	2.5
Electromechanical	1.3	0.7	3.4	1.2

The data indicates a higher difficulty of testing digital units with test equipment than analog or electromechanical units.

Figure 13 compares the VAST tested unit averages to the other types of test equipment in the study. The SRU tester HATS is relatively less reliable compared to the units tested. The C-5A intermediate/depot level tester in the study is also less reliable. The C-5A airborne MADAR system is considerably less reliable percentage wise being an airborne system with a duty cycle approaching the prime equipments. Predicted failure rates for C-5A and the APX72/76 tester LRUs were not available to compute predicted percent TE failure.

From the available data, comparing the predicted percent failure to the experienced data a ratio of approximately 2 times the design data results. This is due to two factors: run times higher than the minimum design time, and equipment MTBF variations from predicted being higher for the ground equipment.

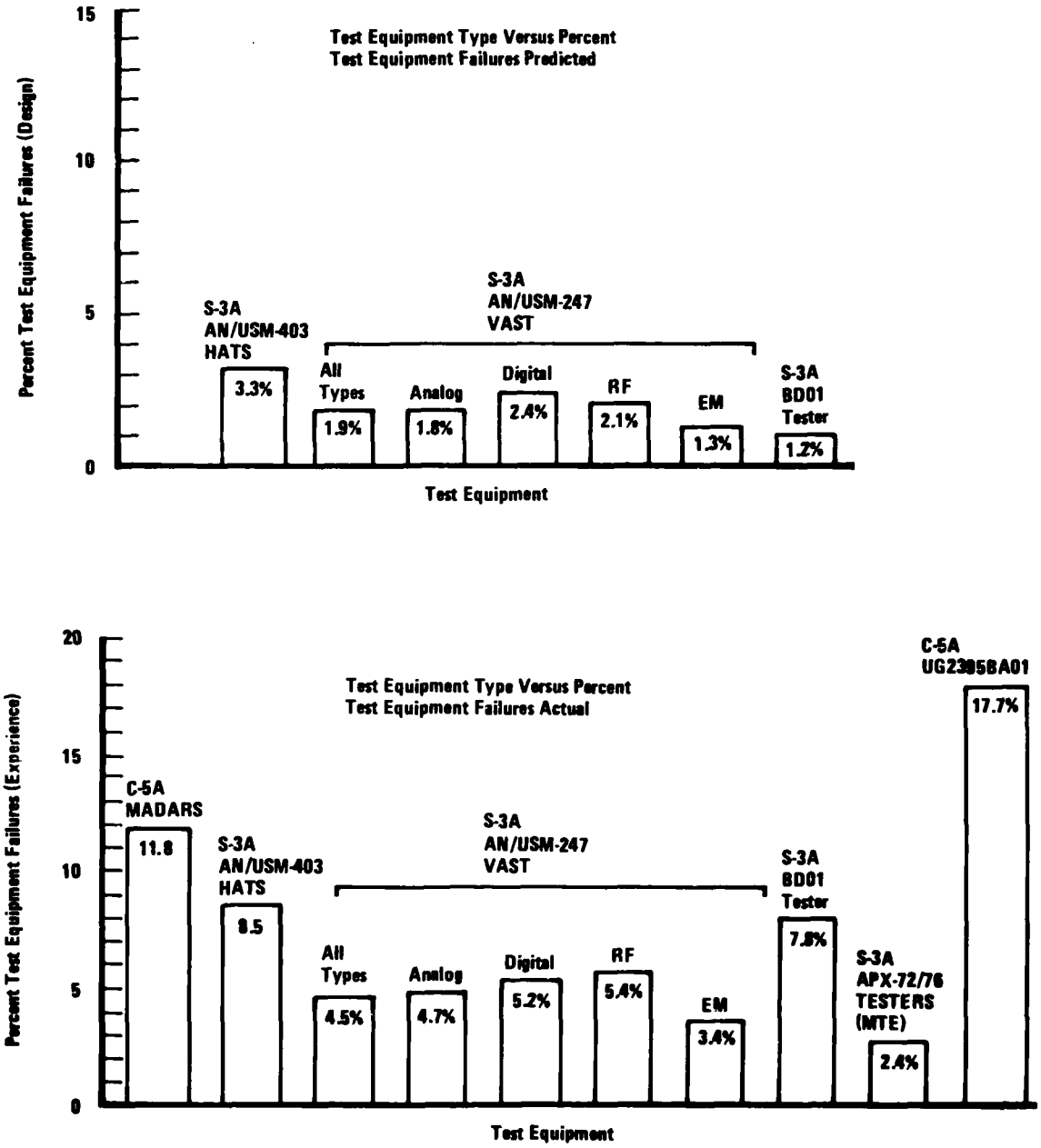

Figure 13. Test Equipment Comparison

5.6 MK-86 DATA

The MK-86 data presents a comparison of the effect on reliability and maintainability between a multi level maintenance approach (i.e., LRU at organizational and SRU at intermediate levels) and an approach that provides for isolation to cards or piece parts at the operational level. The percent of the unit dedicated to BIT is 15.1 percent for the MK-86 compared to the overall average of 8.6 percent for the LRU's studied. The average maintenance time for the MK-86 is 3.1 hours. This compares to the S-3A organizational plus intermediate level average maintenance times of 2.8 hours; thus the results essentially are equivalent.

SUMMARY COMPARISON

	Mean	Std Dev
S-3A Avg Maint time (O+I)	2.8 HR	0.6
MK-86 Avg Maint time	3.1	1.7
S-3A Percent BIT	8.6	5.8
MK-86 Percent BIT	15.1	13.2

SECTION 6

DESIGN TRADE-OFFS

6.1 BUILT-IN-TEST — TEST EQUIPMENT TRADE-OFFS

The development of trade-offs between built-in-test and test equipment requires consideration of a large number of variables to obtain a final figure for evaluation. Life-cycle cost is the measure that best combines the various factors. This study has addressed several of the factors involved in the trade-off process and quantified the relationships dealing with reliability and maintenance elements of BIT and test equipment.

The data presented are applicable to the early design phases of system acquisition when detailed data are not available, when the impact of BIT and external tester reliability and effectiveness needs to be assessed particularly with respect to potential in-service operational experience.

The first effort in the trade-off process is the establishment of a baseline design and maintenance plan. The overall flow of the trade-off process is shown in figure 13.

The baseline life cycle costs (LCC) are estimated from cost data and relationships for direct development costs, and logistic costs. Support equipment costs are predicted for a given configuration in the baseline LCC. The maintenance requirements are reviewed in light of mission requirements and geographical considerations. The prime consideration in any maintenance plan is rapid repair at the organizational level and minimum traffic in the repair and/or logistics pipeline. The major considerations in the maintenance plan are personnel, training, and spares. The following summary figures and tables can be used to develop candidate models for the trade-off of BIT and TE reliability and effectiveness.

For early design decisions the available prime equipment characteristics are used to determine the BIT/TE characteristics to be employed. These include: Weight, Power, Number of LRUs in the system

As the design progresses more accurate predictions can be made by also considering: Number of SRUs in the LRU.
Number of components.

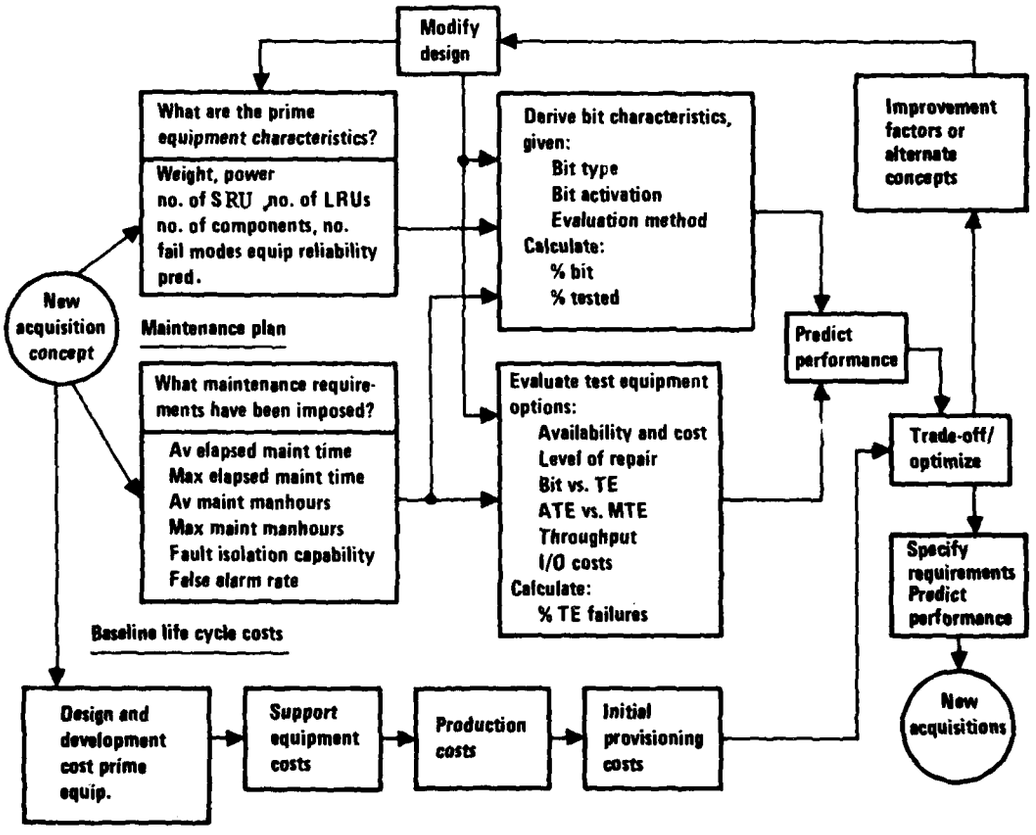

Figure 14. Design trade-off process.

Finally the prediction can be made in the later stages of design by adding:

Number of failure modes in LRU.

The maintenance requirements will dictate the elapsed maintenance time, fault isolation requirements, and false alarm rates. These data are used as inputs to the subsequent derivation of BIT/TE characteristics and test equipment options to predict performance for each candidate configuration. Through successive iterations the final BIT/TE configuration is determined for optimum LCC and BIT/TE reliability.

6.2 BIT AND EXTERNAL TEST EQUIPMENT PERFORMANCE PREDICTIONS

The data from this study can be used to predict preliminary characteristics of BIT for the trade-off described in paragraph 6.1

6.2.1 Amount of BIT

The region of operation developed in this study is between 5 and 15 percent by failure rate. The percent by failure rate of the prime equipment tested (monitored) by BIT ranges from 83 to 95 percent. The type of electronic circuitry in the LRU should be considered in determining the range. Digital LRUs require lower percent BIT with higher percent tested than analog circuitry.

6.2.2 Type of BIT

The relative effects of BIT design characteristics developed in Section 5 and shown in Figure 12 show the wraparound BIT with computer activation and evaluation result in the best performance and ease of maintenance. Maintenance performance was based of the lowest CND rate and lowest excessive maintenance time. Up to 5 percent improvement in maintainability results using this combination over other alternatives described in this report.

6.2.3 External Test Equipment Predictions

The performance of external test equipment (TE) can be predicted during the early evaluation of support systems. Figure 15 shows a comparison of early predictions to actual failure rates experienced by the data sample. The actual percent TE failures from this study were 2.25 times the predicted values for ATE and six times for manual test equipment. The predicted TE failures should be designed to represent less than 2.5 percent to ensure less than 5 percent TE failure rate in LRU maintenance testing.

6.3 DETAILED ANALYSIS

The multiple correlation results provide equations which can be used to predict equipment attributes (% TESTED, % TE FAILURES and average maintenance time) and maintenance cost elements. The data in Section 5 is separated by parameter and data available in different design phases. Depending on the detail data available the results provide increasing levels of correlation. For instance, using the earlier design data of power, weight and number of LRUs to predict the actual test equipment failures the equation is:

$$\begin{aligned}
\%\ \text{TE FAIL} = {} & 6.35 + 0.0057\ (\text{POWER}) - 0.33\ (\text{No. of LRUs}) \\
& + \text{Eq type} \begin{bmatrix} -.87 & (\text{ANALOG}) \\ 0 & (\text{OTHER TYPES}) \end{bmatrix} + \text{BIT Type} \begin{bmatrix} -2.67 & (\text{Wraparound}) \\ -2.49 & (\text{Sig Mon}) \\ 0 & (\text{Comparator}) \end{bmatrix} \\
& + \text{Activation} \begin{bmatrix} 0 & (\text{MANUAL}) \\ +.87 & (\text{COMPUTER}) \end{bmatrix}
\end{aligned}$$

This analysis can be done using Table 33 and any one of three levels of information available as the design evolves:

1. Weight, power, number of LRUs with equipment type and BIT characteristics.

2. Item 1 characteristics plus components and SRUs with equipment type.

3. Item 2 characteristics plus failure modes.

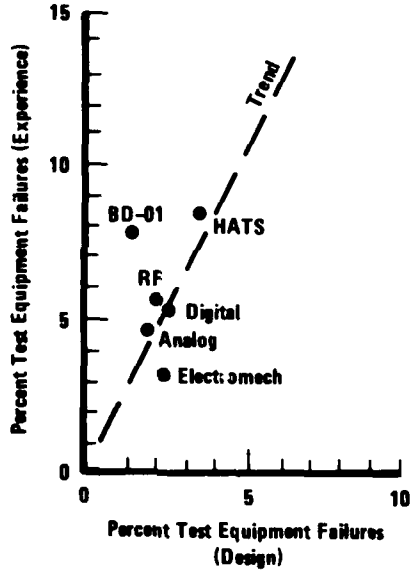

FIGURE 15

External test equipment failures-predicted versus actual

SECTION 7

CONCLUSIONS AND RECOMMENDATIONS

7.1 RESULTS

This study provides data which can be used for evaluating the reliability of electronic equipment built-in-test circuitry as a function of the prime equipments basic complexity and characteristics both physical and functional. The external tester reliability used to support the prime equipment is determined based primarily on use of automatic test equipment at intermediate levels of maintenance for fault verification and isolation. Data on other testers developed by the study indicate the potential range of tester reliability as a function of prime equipment. The use of BIT in ground based electronics is studied and maintenance times distributions developed to indicate the impact of the alternate maintenance concept employed.

7.2 RECOMMENDATIONS FOR DESIGN

This study has been organized to present the results of the study and provide information on the basic relationships necessary for BIT and TE evaluation. In preparing the data and reviewing the designs to determine percent BIT and percent tested design considerations which make BIT effective or could make it more effective were developed. These are enumerated in table 34.

7.3 RECOMMENDATIONS

The findings of this study were limited in scope to obtain the maximum practical data from the contracted expenditures. The data base as a result was only partially explored. One extension to the study includes addition of more LRU data points to the existing curves. A second extension of the study would develop in-depth data on P-3C units in which the maintenance plan involves an aircraft isolation to the card or SRU level.

One factor not explored at all but one which significantly affects the test of integrated programs is the amount of software required to operate the

TABLE 34. DESIGN RECOMMENDATIONS

Number	Recommendation	Reason
1.	Use percent tested as the criteria for specifying BIT without limiting the percent BIT. (Subject to cost tradeoff).	Independence of the parameters and sensitivity of cost elements to percent tested.
2.	Develop self testing schemes in which a failure of the BIT will be determined during the system test.	Percent tested as a design attribute is sensitive to the BIT design self check feature at high levels of BIT and percent tested.
3.	Distinguish between the BIT functions of fault detection during operation, fault detection during system test and fault isolation following failure in writing specification requirements.	A lack of criteria was found making an evaluation of operating effectiveness excessively time consuming.
4.	Incorporate interface and unit to unit tests.	Interface problems lead to false removals and/or can-not-duplicate organization level squawks. Interface problems also contribute to high EMT.
5.	Develop recording procedures to help isolate intermittent faults.	The high level of CND squawks at operational level are not all related to false alarms.
6.	Develop continuous repeating tests as an aid in isolating intermittents.	A single test run which tests OK leaves the maintenance man with no alternative but to repeat the test or report a CND.

system. The centralized or distributed digital computer provides many test provisions not previously employed. The development of the software in terms of both words and dollars needs to be considered along with the hardware impact as described in this report.

7.3.1 Future Technology

The design of the next generation of avionics will employ microcircuit and system technologies just now undergoing concept formulation. The design of both BIT and test equipment interfaces needs to be considered and guidelines developed to take maximum advantage of the emerging technologies, and mature testability discipline.

AD-A083 488 LOCKHEED-CALIFORNIA CO BURBANK F/G 15/5
BUILT-IN-TEST AND EXTERNAL TESTER RELIABILITY CHARACTERISTICS.(U)
MAR 80 D E TUTTLE, R LOVELESS F30602-78-C-0157
UNCLASSIFIED LR-29052 RADC -TR-80-32 NL

2 OF 2
AD
A083488

END
DATE
FILMED
5 80
DTIC

REFERENCES

1. NAEC-MICS-92-0368, thirteenth reliability report for the AN/USM-247 (V) VAST System, Code Ident. 28638, 1 September 78.

2. NIE, NORMAN H. SPSS: Statistical package for the Social Sciences. Second edition, McGraw Hill, 1975.

3. SPURR, WILLIAM A and BONINI, CHARLES P., Statistical Analysis for Business Decisions, Richard D. Irwin Inc., 1968.

APPENDIX A

SINGLE CORRELATION COEFFICIENTS
CORRELATION COEFFICIENTS SYSTEM DATA

	Independent Variable, Correlation Coefficient, R				
Dependent Variable	Sys % BIT	Sys % BIT^2	Sys % Tested	Sys % $Tested^2$	No. of LRU's
Cannot Duplicate - Organ Level	-0.15	-0.25	0.17	0.18	-0.24
Cannot Duplicate BIT Reported	-0.13	-0.25	0.13	0.14	-0.41

CORRELATION COEFFICIENTS LRU DATA

	Independent Variable, Correlation Coefficient, R								
Dependent Variable	No. of LRU's	Weight	Power	No. of SRU's	Components	Failure Modes	Log Failure Modes	Percent BIT	Percent Tested
Percent BIT	0.24	-0.20	0.16	-0.31	-0.02	-0.34	-0.32	–	-0.46
Percent Tested	-0.44	0.18	-0.23	0.33	0.29	0.34	0.44	-0.46	–
Percent Test Equipment Failures	-0.38	0.48	0.54	0.45	0.56	0.58	0.56	–	–
Cannot Duplicate - Percent, I Level	0.08	-0.16	-0.22	-0.07	0.07	-0.08	-0.08	0.37	0.08
Percent Elapsed Maint Time Exceeding 3 Hours	0.03	0.47	0.24	0.44	0.41	0.51	0.45	-0.21	-0.27
Percent Non RFI	0.01	-0.18	-0.12	-0.34	-0.19	-0.21	-0.32	–	–
Average Maint. Time	0.43	-0.01	-0.08	0	-0.02	0.03	-0.09	0.20	-0.33
Total Failures	-0.04	-0.09	0.16	-0.19	0.21	-0.16	-0.03	0.90	-0.29

APPENDIX B

ABBREVIATIONS AND ACRONYMS

3M	-	Navy Airborne System, Maintenance Material Management System
AN	-	Analog
ASW	-	Anti-Submarine Warfare
AVGMAINT	-	Average Maintenance Time
BB	-	Building Blocks
BIT	-	Built-In-Test
BITE	-	Built-In-Test Equipment, a Subset of BIT
BITPC	-	Percent Built-In-Test Failures
CITS	-	Central Integrated Test Set
CLA	-	Control Logic Assembly
CND	-	Can-Not-Duplicate
CND_I	-	Can-Not-Duplicate, Intermediate Level
CND_O	-	Can-Not-Duplicate, Organizational Level
CNDOBIT	-	CND_O - BIT Discovered
COMPON	-	Number of Components
DIG	-	Digital Electronics
EM	-	Electromechanical Assembly
EMT	-	Elapsed Maintenance Time
EMT_3	-	Elapsed Maintenance Time, Exceeding 3 Hours at Organizational Level
FAR	-	False Alarm Rate
HATS	-	AN/USM - 403 Hybrid Automatic Test Set
LCC	-	Life Cycle Cost
LFAILMODE	-	Natural Log of Failure Mode
LOR	-	Level Of Repair
LRU	-	Line Replaceable Unit
MAF	-	Maintenance Action Form
MADARS	-	C-5A Airborne Malfunction Detection Analysis and Recording System
MDS	-	Navy Shipboard Systems, Maintenance Data System
MK86	-	US Navy Mark 86, Shipboard Weapon Control System

MTTR	-	Mean-Time-To-Repair
NOLRU	-	Number Of LRUs (Applied to LRU Data)
NOLRUSYS	-	Number Of LRUs in System
PCTEFAIL	-	Percent TE Failures
RF	-	Radio Frequency
RFI	-	Ready-For-Issue
RTE	-	Test Equipment Run Time
SRU	-	Shop Replaceable Unit
TE	-	Test Equipment
TOTFAIL	-	Total Number of Failures

MISSION
of
Rome Air Development Center

RADC plans and executes research, development, test and selected acquisition programs in support of Command, Control Communications and Intelligence (C^3I) activities. Technical and engineering support within areas of technical competence is provided to ESD Program Offices (POs) and other ESD elements. The principal technical mission areas are communications, electromagnetic guidance and control, surveillance of ground and aerospace objects, intelligence data collection and handling, information system technology, ionospheric propagation, solid state sciences, microwave physics and electronic reliability, maintainability and compatibility.