AD-A081 111 NAVAL OCEAN SYSTEMS CENTER SAN DIEGO CA F/G 19/8
TORPEDO MK 46 PHYSICAL CHARACTERISTICS.(U)
AUG 78 R T SIMERAL
UNCLASSIFIED NOSC/TD-195

1 OF 1
AD
A081111

END
DATE
FILMED
3-80
DDC

26 JUN 1978

NOSC

NOSC TD 195

NOSC TD 195

Technical Document 195

TORPEDO MK 46 PHYSICAL CHARACTERISTICS

RT Simeral

August 1978

AD A081111

DDC FILE COPY

APPROVED FOR PUBLIC RELEASE; DISTRIBUTION UNLIMITED

NAVAL OCEAN SYSTEMS CENTER
SAN DIEGO, CALIFORNIA 92152

NAVAL OCEAN SYSTEMS CENTER, SAN DIEGO, CA 92152

AN ACTIVITY OF THE NAVAL MATERIAL COMMAND

RR GAVAZZI, CAPT, USN
Commander

HL BLOOD
Technical Director

ADMINISTRATIVE STATEMENT

This work is a compilation of engineering information generated during the design of the Torpedo MK 46 and Mods. The data is used extensively at NOSC, and this document makes it available to other activities.

The report was reviewed for technical adequacy by E. G. Parks and edited by A. N. Saltzman of this Center.

Released by
R. L. Matthews, Head
Torpedo Division

Under authority of
M. O. Heinrich, Head
Torpedo and Countermeasures Department

ONM

2 JUN 1979

GOVERNMENT-INDUSTRY DATA EXCHANGE PROGRAM

GENERAL DOCUMENT SUMMARY SHEET

(19)

Please Type All Information – See Instructions on Reverse

1 OF

1. ACCESS NUMBER E161-2604	2. COMPONENT/PART NAME PER GIDEP SUBJECT THESAURUS Specifications and Plans, Parameters	
3. APPLICATION Armt Propelled	4. MFR NOTIFICATION ☐ NOTIFIED ☒ NOT APPLICABLE	5. DOCUMENT ISSUE (Month/Year) (11) Aug[redacted]78
6. ORIGINATOR'S DOCUMENT TITLE (6) Torpedo MK 46 Physical Characteristics		7. DOCUMENT TYPE ☒ GEN RPT ☐ NONSTD PART ☐ SPEC
8. ORIGINATOR'S DOCUMENT NUMBER (14) NOSC/TD-195	9. ORIGINATOR'S PART NAME/IDENTIFICATION N/A (12) 32	
10. DOCUMENT (SUPERSEDES) (SUPPLEMENTS) ACCESS NO. None	11. ENVIRONMENTAL EXPOSURE CODES N/A	
12. MANUFACTURER N/A	13. MANUFACTURER PART NUMBER ----	14. INDUSTRY/GOVERNMENT STANDARD NUMBER

15. OUTLINE, TABLE OF CONTENTS, SUMMARY, OR EQUIVALENT DESCRIPTION

(18) GIDEP

Describes the MK 46 Torpedo in schematics with identification of essential characteristics in tabular form. Depending on its configuration, the MK 46 dimensions are about as follows: Length 102 inches, diameter 12.8 inches, weight 512 lb. Major elements of the MK 46 are Transducer Nose, Warhead or Exercise Head, Fuel Tank and Afterbody Assembly. Among the configurations described are the WARSHOT Models 1, 2, 4, and 5, the Fleet Exercise Configuration and the Fleet Tracking Configuration.

(9) Technical documents

(10) R.T./Simeral

80 3 1 102

16. KEY WORDS FOR INDEXING

Torpedo; MK 46; Characteristics; WARSHOT (Doc Des--S)

17. GIDEP REPRESENTATIVE Joseph Hirsch	18. PARTICIPANT ACTIVITY AND CODE USN, Naval Oceans Systems Center, San Diego, CA (Y3)

DD FORM 1 NOV 78 2000

REPRODUCTION OR DISPLAY OF THIS MATERIAL FOR SALES OR PUBLICITY PURPOSES IS PROHIBITED

31

393159

11

CONTENTS

MK 46 Mods 1 and 2 Warshot (with Warhead MK 103 Mod 0) . . . page 3
MK 46 Mods 1 and 2 Warshot (with Warhead MK 103 Mod 1) . . . 4
MK 46 Mods 1 and 2 Inert Warshot (with Inert Warhead MK 103 Mod 1) . . . 5
MK 46 Mods 1 and 2 Fleet Exercise Configuration . . . 6
MK 46 Mods 1 and 2 Fleet Tracking Configuration . . . 7
MK 46 Mods 1 and 2 Fleet Buoyant Exercise Configuration . . . 8
MK 46 Mods 1 and 2 Fleet Buoyant Tracking Configuration . . . 9
MK 46 Mod 4 Warshot (with Warhead MK 103 Mod 0) "Captor" . . . 10
MK 46 Mod 4 Warshot (with Warhead MK 103 Mod 1) "Captor" . . . 11
MK 46 Mod 4 Inert Warshot (with Inert Warhead MK 103 Mod 1) "Captor" . . . 12
MK 46 Mod 4 Non 3-D Range Exercise Configuration "Captor" . . . 13
MK 46 Mod 4 3-D Range Exercise, Autec-Barstur "Captor" . . . 14
MK 46 Mod 4 3-D Range Exercise, Nanoose "Captor" . . . 15
MK 46 Mod 5 Warshot (with Warhead MK 103 Mod 0) "Neartip" . . . 16
MK 46 Mod 5 Warshot (with Warhead MK 103 Mod 1) "Neartip" . . . 17
MK 46 Mod 5 Inert Warshot (with Inert Warhead MK 103 Mod 1) "Neartip" . . . 18
MK 46 Mod 5 3-D Range Exercise Configuration "Neartip" . . . 19
MK 46 Mod 5 Fleet Buoyant Exercise Configuration "Neartip" . . . 20
Main Assembly, MK 46 Mods 1 and 2 . . . 21
Main Assembly, MK 46 Mod 4 ("Captor") . . . 22
Main Assembly, MK 46 Mod 5 ("Neartip") . . . 23
Miscellaneous Information . . . 25
- MK 46 Mod 1 Evaluation Units (1964) Weight and Balance Chart . . . 26
- Sync Clock Vehicle, MK 46 Mod 1 (1965) Weight and Balance Chart . . . 27
- Fleet Buoyancy Configuration, MK 46 Mod 1 (1969) Weight and Balance Chart . . . 28
- MK 46 Mods Major Component Weights . . . 29, 30
- MK 46 Mods Coordination, Outline and Fitment Drawing Lists . . . 31

A

3

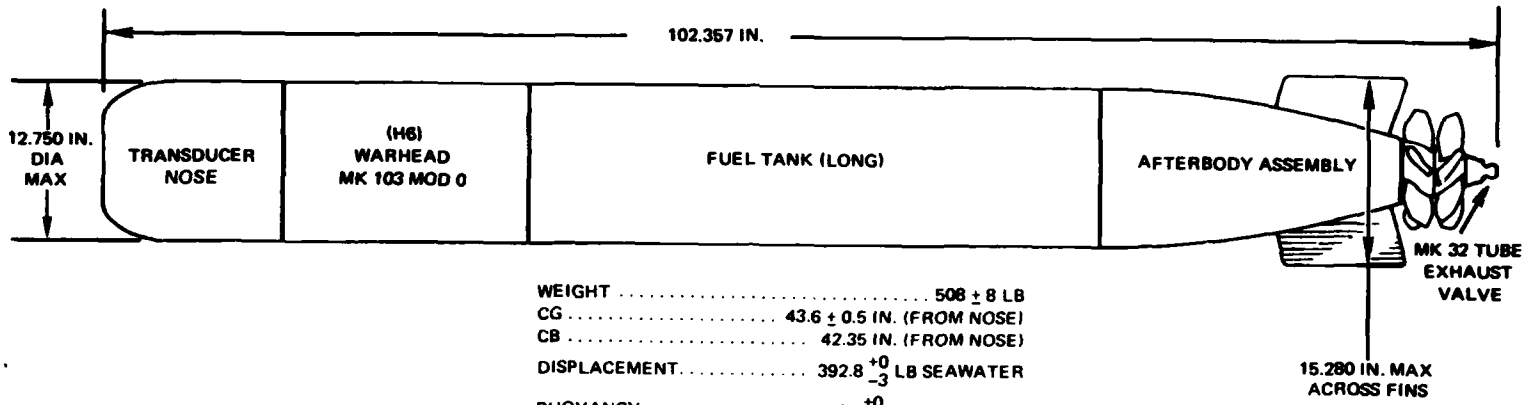

WEIGHT	508 ± 8 LB
CG	43.6 ± 0.5 IN. (FROM NOSE)
CB	42.35 IN. (FROM NOSE)
DISPLACEMENT	392.8^{+0}_{-3} LB SEAWATER
BUOYANCY	115^{+0}_{-10} LB NEGATIVE
PULL AROUND	44 ± 15 IN-LB
STATIC HEEL	0° ± 20°
MOMENT OF INERTIA	
YAW AND PITCH	77.0 SLUG-FT^2
ROLL	2.4 SLUG-FT^2

MK 46 MODS 1 & 2 WARSHOT (WITH WARHEAD MK 103 MOD 0)

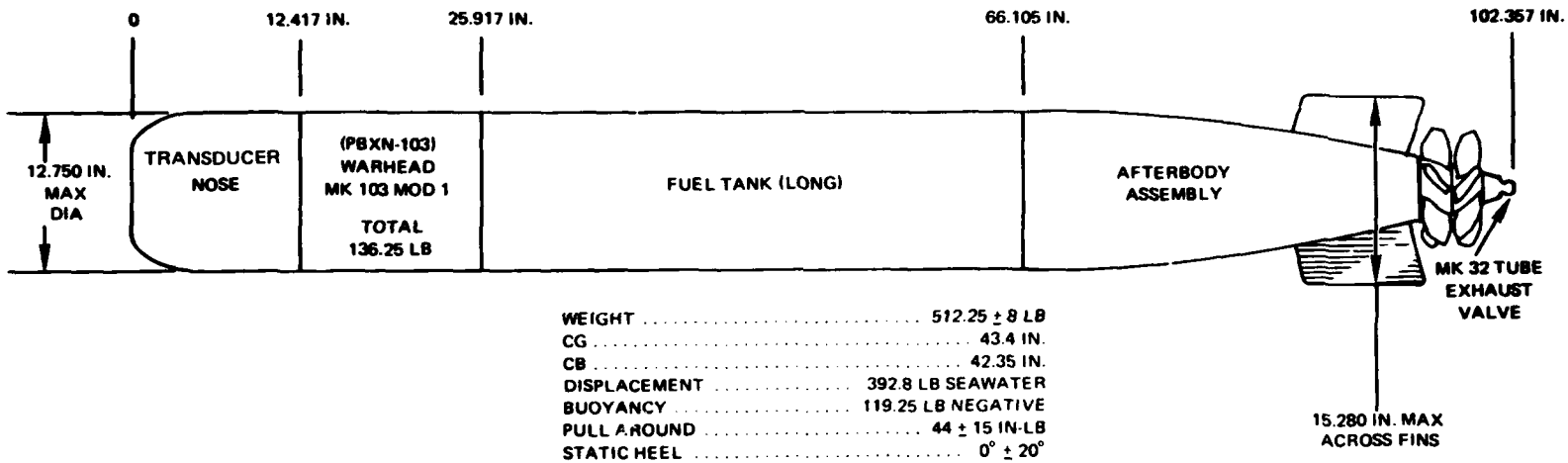

WEIGHT	512.25 ± 8 LB
CG	43.4 IN.
CB	42.35 IN.
DISPLACEMENT	392.8 LB SEAWATER
BUOYANCY	119.25 LB NEGATIVE
PULL AROUND	44 ± 15 IN-LB
STATIC HEEL	0° ± 20°
MOMENT OF INERTIA	
PITCH AND YAW	77.8 ± 5 SLUG-FT^2
ROLL	2.4 SLUG-FT^2

MK 46 MOD 1 & 2 WARSHOT (WITH WARHEAD MK 103 MOD 1)

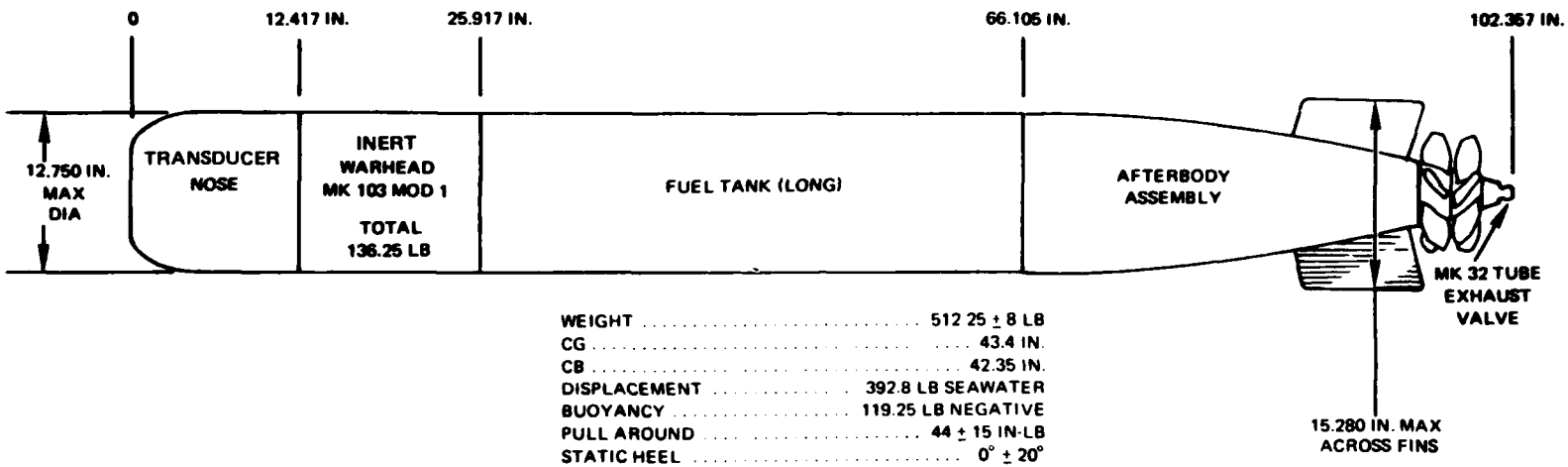

WEIGHT	512 25 ± 8 LB
CG	43.4 IN.
CB	42.35 IN.
DISPLACEMENT	392.8 LB SEAWATER
BUOYANCY	119.25 LB NEGATIVE
PULL AROUND	44 ± 15 IN-LB
STATIC HEEL	0° ± 20°
MOMENT OF INERTIA	
PITCH AND YAW	77.8 ± 5 SLUG-FT^2
ROLL	2.4 SLUG-FT^2

MK 5 MOD 1 & 2 INERT WARSHOT (WITH INERT WARHEAD MK 103 MOD 1)

6

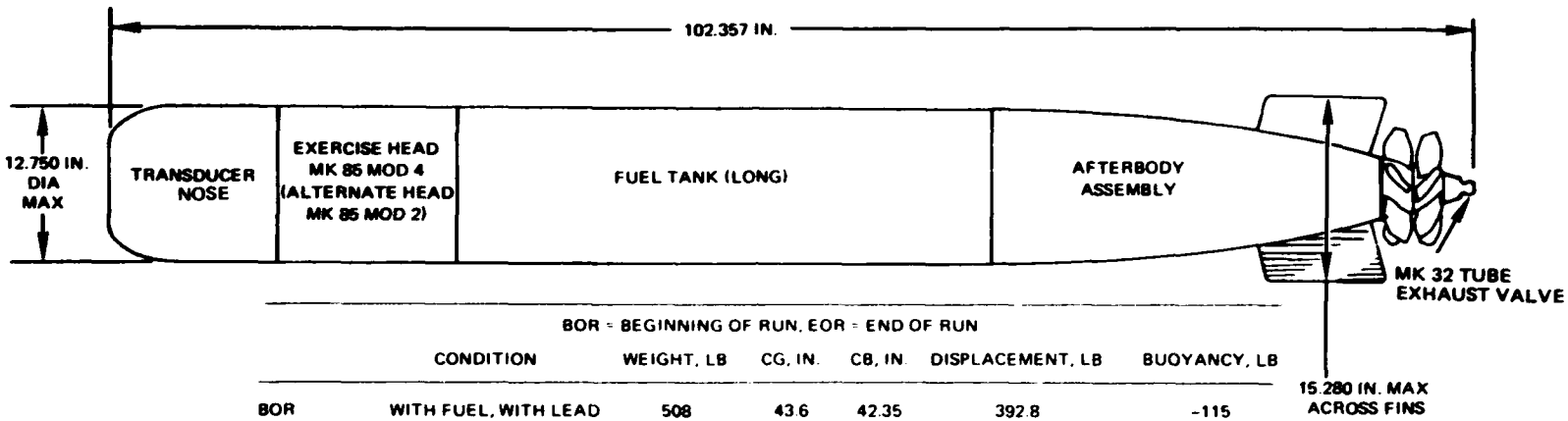

BOR = BEGINNING OF RUN, EOR = END OF RUN

	CONDITION	WEIGHT, LB	CG, IN.	CB, IN.	DISPLACEMENT, LB	BUOYANCY, LB
BOR	WITH FUEL, WITH LEAD	508	43.6	42.35	392.8	-115
EOR	NO FUEL, WITH LEAD	421	41.6	42.35	392.8	-28
BOR ABORT	WITH FUEL, NO LEAD	434	47.3	42.75	385.8	-48
EOR RECOVERY	NO FUEL, NO LEAD	347	45.8	42.75	385.8	+39

MOMENT OF INERTIA

YAW AND PITCH	77.0 SLUG-FT^2
ROLL	2.4 SLUG-FT^2

MK 46 MODS 1 & 2 FLEET EXERCISE CONFIGURATION

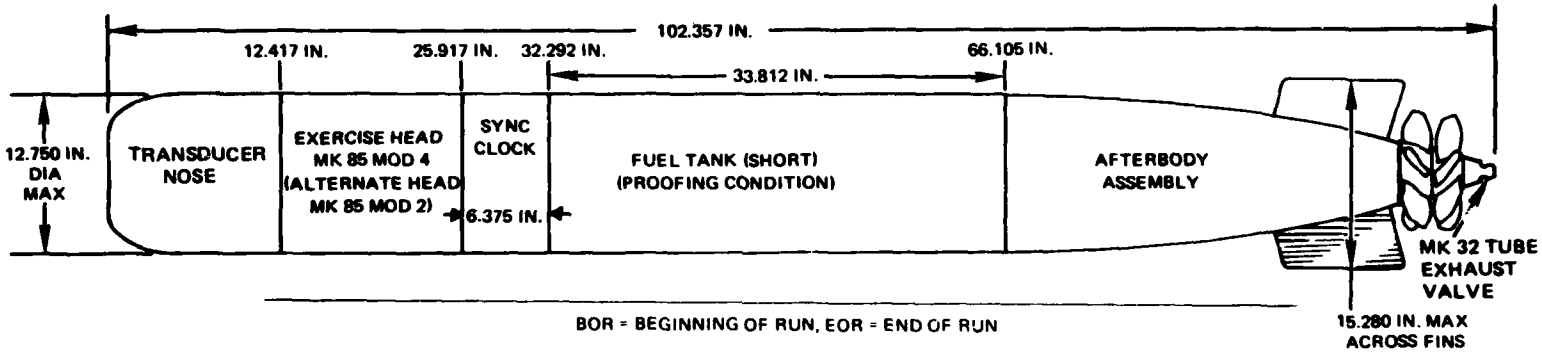

BOR = BEGINNING OF RUN, EOR = END OF RUN

	CONDITION	WEIGHT, LB	CG, IN	CB, IN.	DISPLACEMENT, LB	BUOYANCY, LB
BOR	WITH FUEL, WITH LEAD	493	42.2	42.35	392.8	-100
EOR	NO FUEL, WITH LEAD	434	40.2	42.35	392.8	-41
BOR ABORT	WITH FUEL, NO LEAD	419	45.9	42.75	385.8	-33
EOR RECOVERY	NO FUEL, NO LEAD	360	44.4	42.75	385.8	+26

MOMENT OF INERTIA

YAW AND PITCH ..... 77 SLUG-FT^2

ROLL ..... 2.4 SLUG-FT^2

MK 46 MODS 1 & 2 FLEET TRACKING CONFIGURATION

8

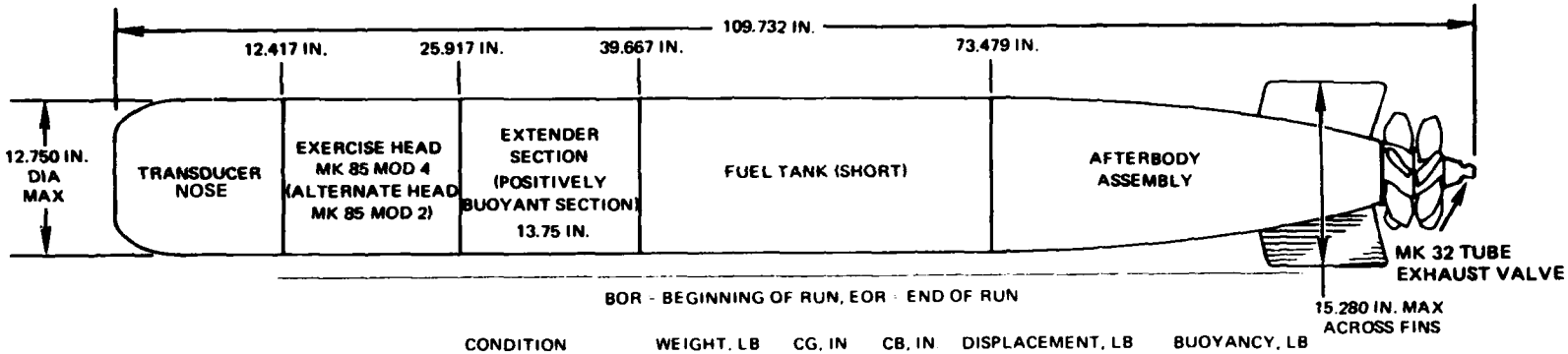

BOR - BEGINNING OF RUN, EOR - END OF RUN

	CONDITION	WEIGHT, LB	CG, IN	CB, IN	DISPLACEMENT, LB	BUOYANCY, LB
BOR	WITH FUEL, WITH LEAD	471.27	46.8	46.03	427.52	-43.75
EOR	NO FUEL, WITH LEAD	412.27	44.4	46.03	427.52	+15.25
BOR ABORT	WITH FUEL, NO LEAD	397.27	51.5	46.43	420.52	+23.25
EOR RECOVERY	NO FUEL, NO LEAD	338.27	49.2	46.43	420.52	+82.25

MOMENT OF INERTIA

YAW AND PITCH ..... 96.75 SLUG-FT^2
ROLL ..... 2.4 SLUG-FT^2

MK 46 MODS 1 & 2 FLEET BUOYANT EXERCISE CONFIGURATION

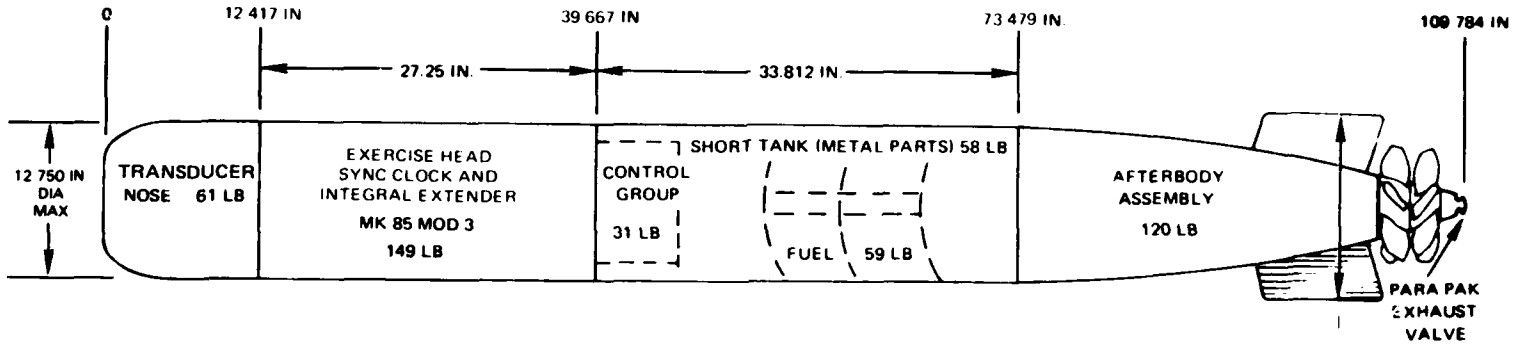

BOR = BEGINNING OF RUN, EOR = END OF RUN

	CONDITION	WEIGHT, LB	CG, IN.	CB, IN.	DISPLACEMENT, LB	BUOYANCY, LB
BOR	WITH FUEL, WITH LEAD	479	47.6	46.03	427.52	-51.5 NEGATIVE
EOR	NO FUEL, WITH LEAD	420	45.3	46.03	427.52	+7.5 POSITIVE
BOR ABORT	WITH FUEL, NO LEAD	405	52.3	46.43	420.52	+15.5 POSITIVE
EOR RECOVERY	NO FUEL, NO LEAD	346	50.4	46.43	420.52	+74.5 POSITIVE

MOMENT OF INERTIA

PITCH AND YAW ..... 96.7 SLUG-FT^2

ROLL ..... 2.4 SLUG-FT^2

MK 46 MODS 1 & 2 FLEET BUOYANT TRACKING CONFIGURATION

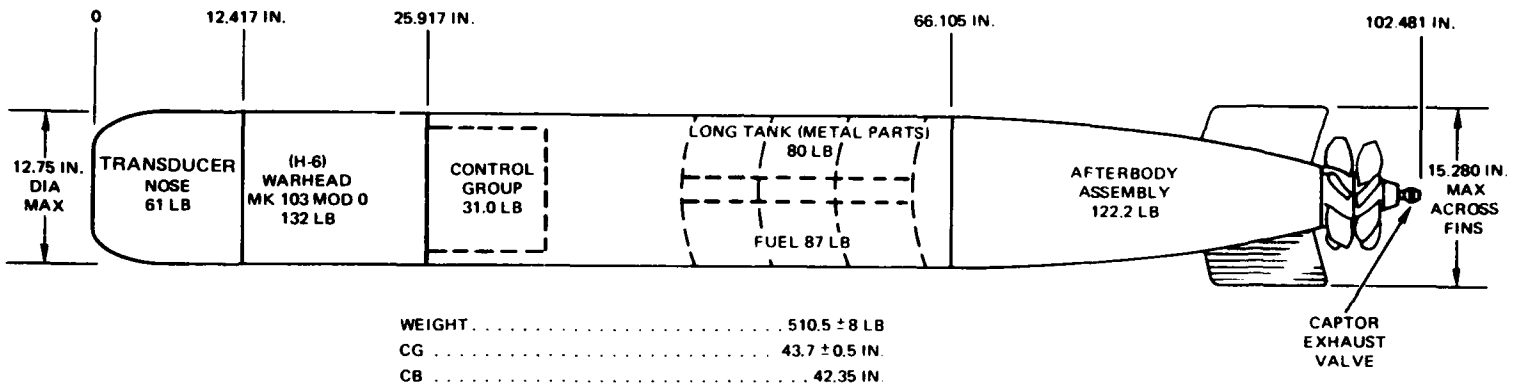

WEIGHT . . . . . 510.5 ± 8 LB
CG . . . . . 43.7 ± 0.5 IN.
CB . . . . . 42.35 IN.
DISPLACEMENT . . . . . 392.8 $\pm^{0}_{3}$ LB SEA WATER
BUOYANCY . . . . . 117.7 LB NEGATIVE
PULL AROUND . . . . . 44 ± 15 IN.-LB
STATIC HEEL . . . . . $0^{\circ} \pm 20^{\circ}$

MOMENT OF INERTIA
- PITCH & YAW . . . . . 77.6 SLUG-FT^2
- ROLL . . . . . 2.4 SLUG-FT^2

MK 46 MOD 4 WARSHOT (WITH WARHEAD MK 103 MOD 0) "CAPTOR"

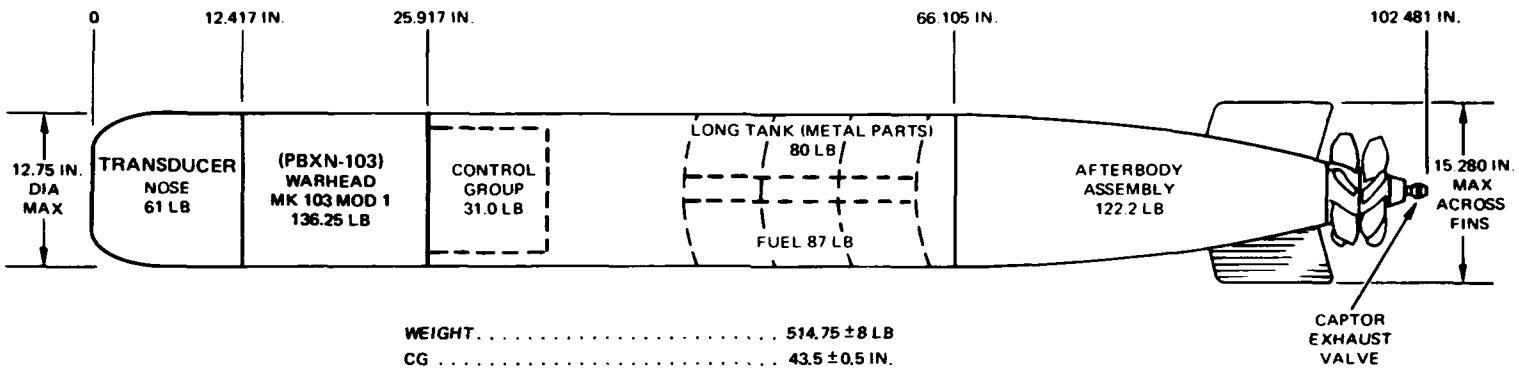

WEIGHT	514.75 ± 8 LB
CG	43.5 ± 0.5 IN.
CB	42.35 IN.
DISPLACEMENT	$392.8 \pm {}^{0}_{3}$ LB SEA WATER
BUOYANCY	121.95 LB NEGATIVE
PULL AROUND	44 ± 15 IN.-LB
STATIC HEEL	$0^\circ \pm 20^\circ$
MOMENT OF INERTIA	
PITCH & YAW	78.3 SLUG-FT^2
ROLL	2.4 SLUG-FT^2

MK 46 MOD 4 WARSHOT (WITH WARHEAD MK 104 MOD 1) "CAPTOR"

12

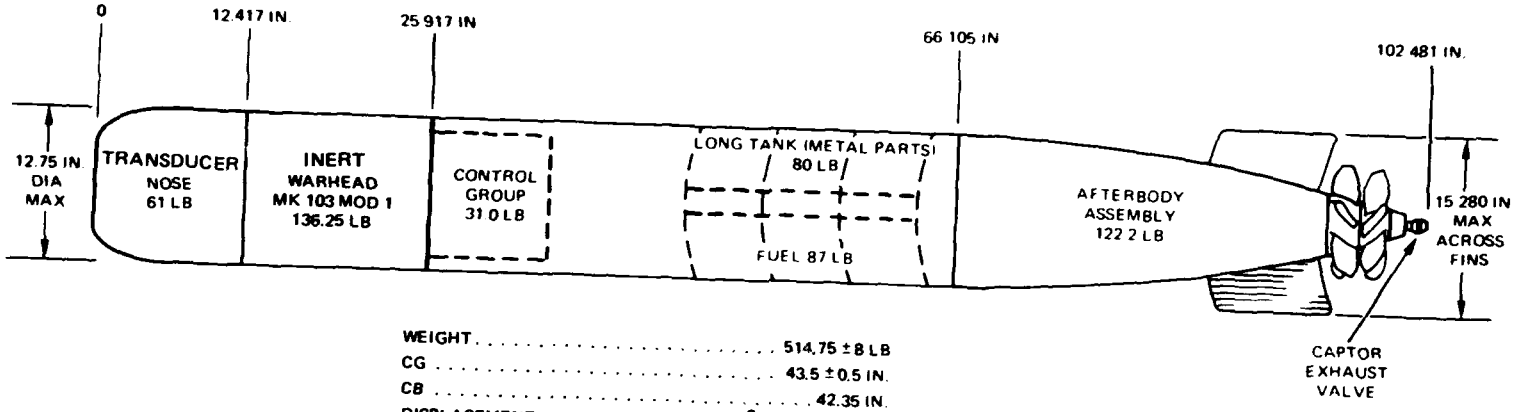

WEIGHT	514.75 ± 8 LB
CG	43.5 ± 0.5 IN.
CB	42.35 IN.
DISPLACEMENT	$392.8 \pm {}^{0}_{3}$ LB SEA WATER
BUOYANCY	121.95 LB NEGATIVE
PULL AROUND	44 ± 15 IN.-LB
STATIC HEEL	0° ± 20°
MOMENT OF INERTIA	
PITCH & YAW	78.3 SLUG-FT^2
ROLL	2.4 SLUG-FT^2

MK 46 MOD 4 INERT WARSHOT (WITH INERT WARHEAD MK 103 MOD 1) "CAPTOR"

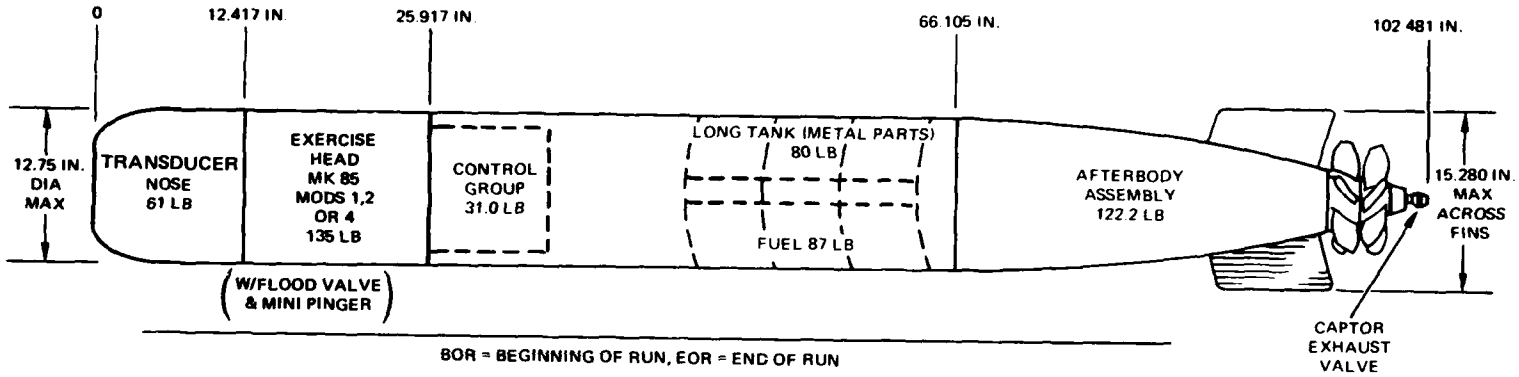

BOR = BEGINNING OF RUN, EOR = END OF RUN

	CONDITION	WEIGHT, LB	CG, IN.	CB, IN.	DISPLACEMENT, LB	BUOYANCY, LB
BOR	WITH FUEL, WITH LEAD	514.75	43.5	42.35	392.8	−121.95
EOR	NO FUEL, WITH LEAD	427.75	41.5	42.35	392.8	− 34.95
BOR ABORT	WITH FUEL, NO LEAD	440.75	47.2	42.75	385.8	− 54.95
EOR RECOVERY	NO FUEL, NO LEAD	353.75	45.7	42.75	385.8	+ 32.05

MOMENT OF INERTIA

PITCH & YAW . . . . . 78.3 SLUG-FT^2
ROLL . . . . . 2.4 SLUG-FT^2

MK 46 MOD 4 NON 3-D RANGE EXERCISE CONFIGURATION "CAPTOR"

14

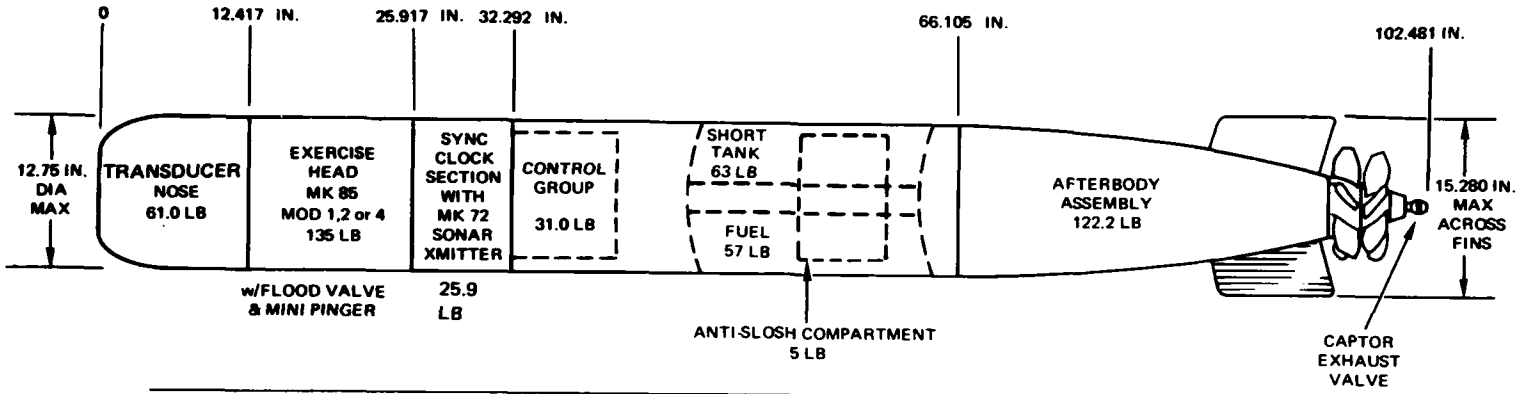

BOR = BEGINNING OF RUN, EOR = END OF RUN

	CONDITION	WEIGHT, LB	CG, IN.	CB, IN.	DISPLACEMENT, LB	BUOYANCY, LB
BOR	WITH FUEL, WITH LEAD	498.75	42.3	42.35	392.8	−105.95
EOR	NO FUEL, WITH LEAD	441.75	40.3	42.35	392.8	−48.95
BOR ABORT	WITH FUEL, NO LEAD	424.75	46.0	42.75	385.8	−38.95
EOR RECOVERY	NO FUEL, NO LEAD	367.75	44.5	42.75	385.8	+18.05

MOMENT OF INERTIA

PITCH & YAW . . . . . 77.0 SLUG-FT^2
ROLL . . . . . 2.4 SLUG-FT^2

MK 46 MOD 4, 3-D RANGE EXERCISE, AUTEC-BARSTUR "CAPTOR"

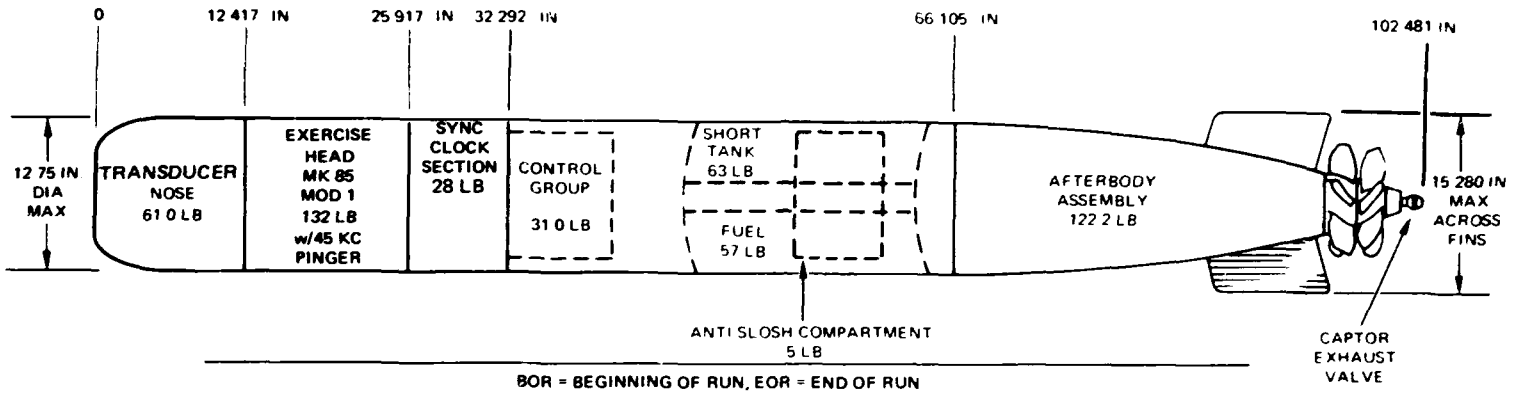

BOR = BEGINNING OF RUN, EOR = END OF RUN

	CONDITION	WEIGHT, LB	CG, IN.	CB, IN.	DISPLACEMENT, LB	BUOYANCY, LB
BOR	WITH FUEL, WITH LEAD	502.0	42.2	42.35	392.8	−109.2
EOR	NO FUEL, WITH LEAD	445.0	40.2	42.35	392.8	−52.2
BOR ABORT	WITH FUEL, NO LEAD	428.0	45.9	42.75	385.8	−42.2
EOR RECOVERY	NO FUEL, NO LEAD	371.0	44.4	42.75	385.8	+14.8

MOMENT OF INERTIA

PITCH & YAW . . . . . 77.0 SLUG·FT^2
ROLL . . . . . 2.4 SLUG·FT^2

MK 46 MOD 4, 3-D RANGE EXERCISE, NANOOSE "CAPTOR"

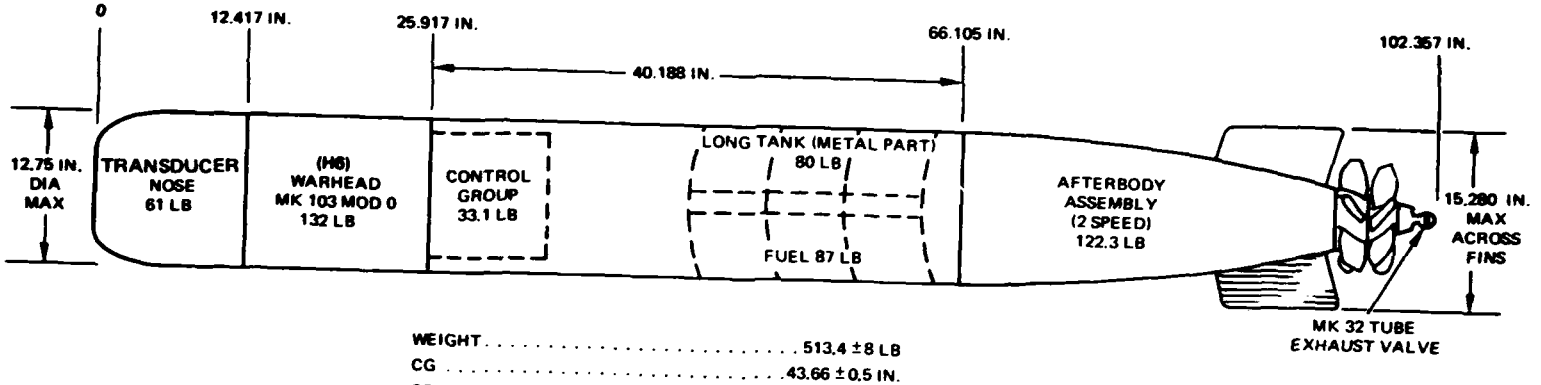

WEIGHT . . . . . 513.4 ±8 LB
CG . . . . . 43.66 ±0.5 IN.
CB . . . . . 42.35 IN.
DISPLACEMENT . . . . . 392.8 $\pm^{0}_{3}$ LB SEA WATER
BUOYANCY . . . . . 120.6 LB NEGATIVE
PULL AROUND . . . . . 44 ± 15 IN.-LB
STATIC HEEL . . . . . 0° ± 20°

MOMENT OF INERTIA
PITCH & YAW . . . . . 77.8 SLUG-FT^2
ROLL . . . . . 2.4 SLUG-FT^2

MK 46 MOD 5 WARSHOT (WITH WARHEAD MK 103 MOD 0) "NEARTIP"

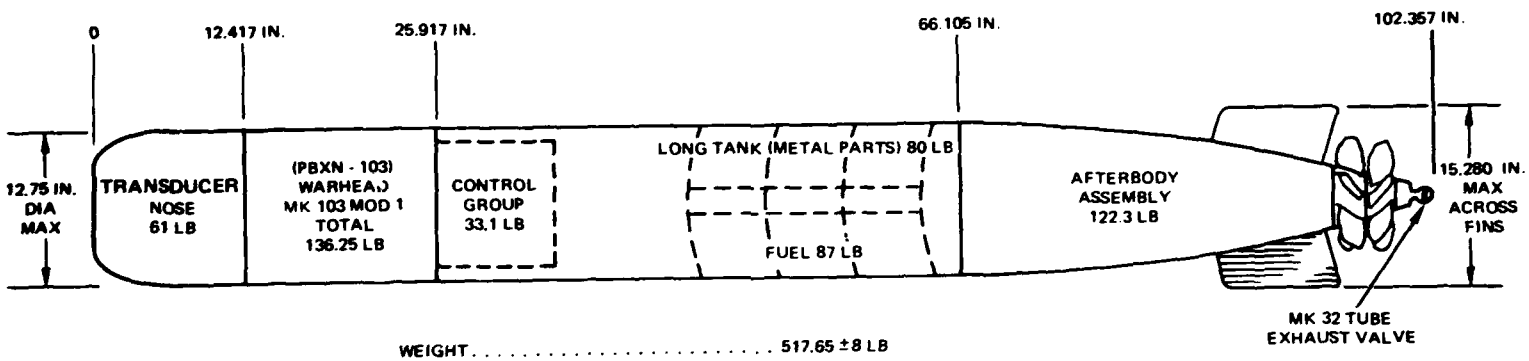

WEIGHT	517.65 ± 8 LB
CG	43.46 ± 0.5 IN.
CB	42.35 IN.
DISPLACEMENT	392.8 $\pm^{0}_{3}$ LB SEAWATER
BUOYANCY	124.8 LB NEGATIVE
PULL AROUND	44 ± 15 IN.-LB
STATIC HEEL	0° ± 20°
MOMENT OF INERTIA	
PITCH & YAW	78.5 SLUG-FT^2
ROLL	2.4 SLUG-FT^2

MK 46 MOD 5 WARSHOT (WITH WARHEAD MK 103 MOD 1) "NEARTIP"

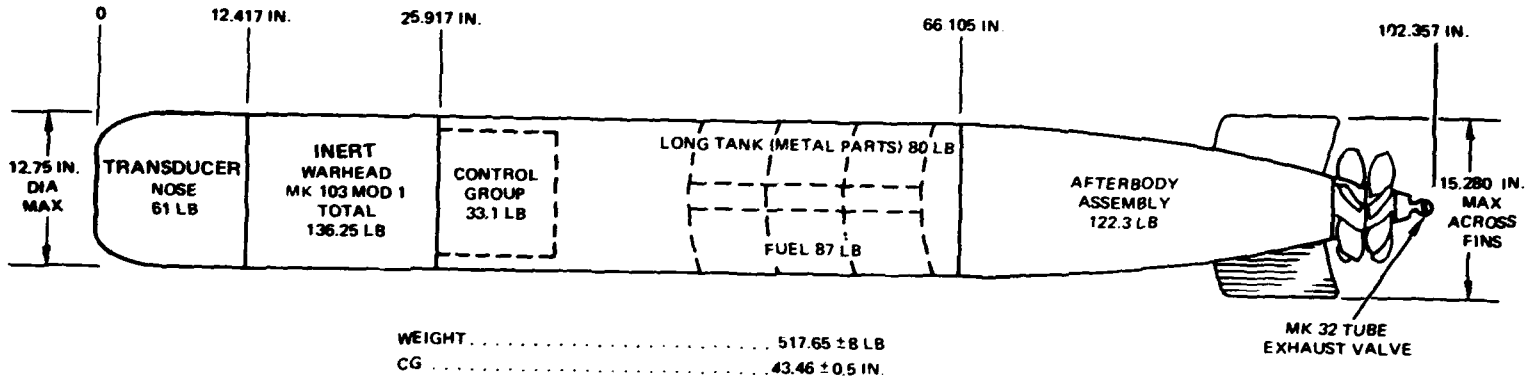

WEIGHT	517.65 ± 8 LB
CG	43.46 ± 0.5 IN.
CB	42.35 IN.
DISPLACEMENT	$329.8 \pm {}^{0}_{3}$ LB SEA WATER
BUOYANCY	124.8 LB NEGATIVE
PULL AROUND	44 ± 15 IN.-LB
STATIC HEEL	0° ± 20°
MOMENT OF INERTIA	
PITCH & YAW	78.5 SLUG-FT^2
ROLL	2.4 SLUG-FT^2

MK 46 MOD 5 INERT WARSHOT (WITH INERT WARHEAD MK 103 MOD 1) "NEARTIP"

19

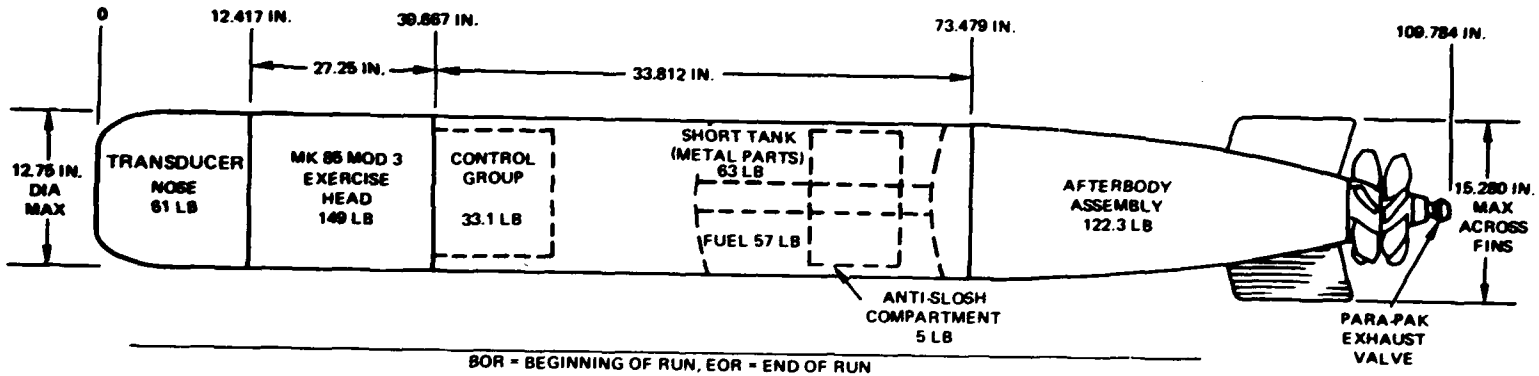

BOR = BEGINNING OF RUN, EOR = END OF RUN

	CONDITION	WEIGHT, LB	CG, IN.	CB, IN.	DISPLACEMENT, LB	BUOYANCY, LB
BOR	WITH FUEL, WITH LEAD	487.4*	47.87	46.03	427.52	−59.9
EOR	NO FUEL, WITH LEAD	430.4	45.27	46.03	427.52	−2.9
BOR ABORT	WITH FUEL, NO LEAD	413.4	52.57	46.43	420.52	+7.12*
EOR RECOVERY	NO FUEL, NO LEAD	354.4	50.67	46.43	420.52	+66.12

MOMENT OF INERTIA

PITCH & YAW . . . . . 97.1 SLUG-FT^2
ROLL . . . . . 2.4 SLUG-FT^2

*FOR 15 LB POSITIVE BUOYANCY AT BOR ABORT, FILL WITH FUEL TO 480 LB TOTAL WEIGHT.

MK46 MOD 5 3-D RANGE EXERCISE CONFIGURATION "NEARTIP"

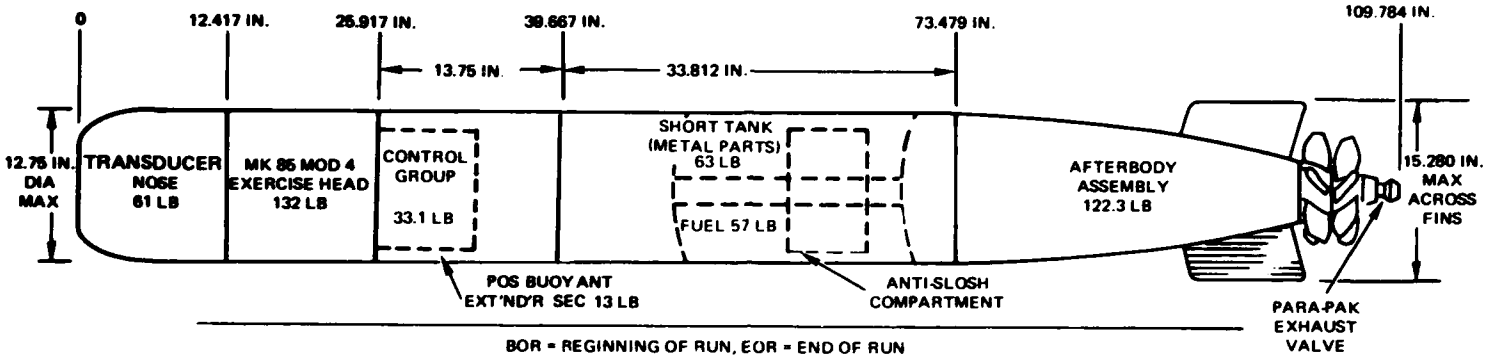

BOR = BEGINNING OF RUN, EOR = END OF RUN

	CONDITION	WEIGHT, LB	CG, IN.	CB, IN.	DISPLACEMENT, LB	BUOYANCY, LB
BOR	WITH FUEL, WITH LEAD (w/o TRL=5% LB)	*479.67	47.00	46.03	427.52	−52.15
EOR	NO FUEL, WITH LEAD	422.67	44.6	46.03	427.52	+4.85
BOR ABORT	WITH FUEL, NO LEAD	405.67	51.7	46.43	420.52	+14.85*
EOR RECOVERY	NO FUEL, NO LEAD	348.67	49.4	46.43	420.52	+71.85

MOMENT OF INERTIA

PITCH & YAW . . . . . 96.7 SLUG-FT^2
ROLL . . . . . 2.4 SLUG-FT^2

*FOR 15 LB POSITIVE BUOYANCY AT BOR ABORT, FILL WITH FUEL TO 480 LB TOTAL WEIGHT.

MK 46 MOD 5 FLEET BUOYANT EXERCISE CONFIGURATION "NEARTIP"

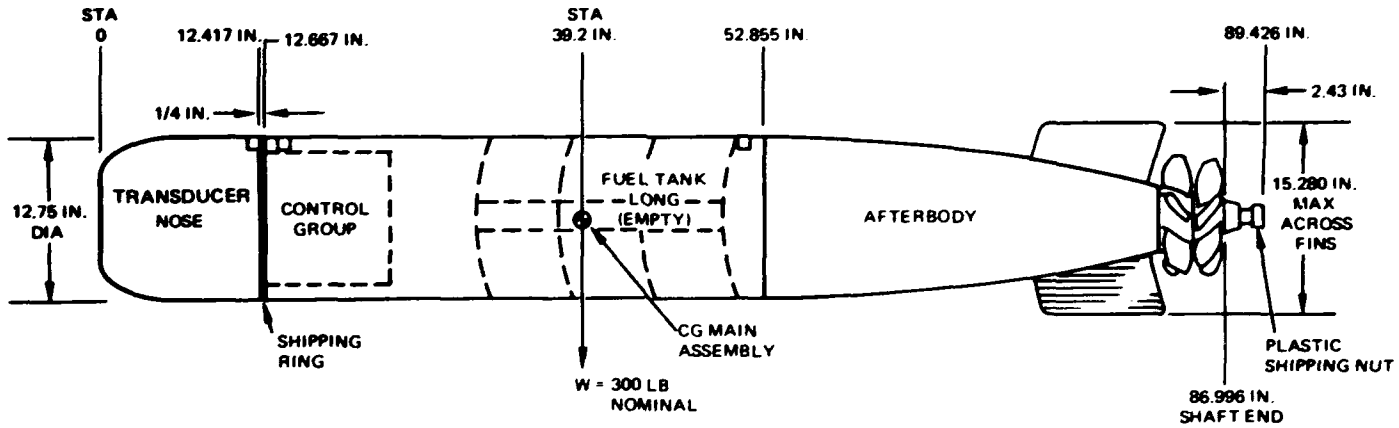

Item	Weight (lb)	x (in.)	Wx (in.-lb)
Nose	61.00	5.5	335.5
Shipping Ring	8.00	12.537	100.3
Control Group	31.00	19.750	612.0
Fuel Tank – LONG (Empty)	80.00	34.750	2,775.0
Afterbody Assembly (No grain, w/oil in engine)	120.00	66.105	7,935.0
TOTAL	300.00		11,757.8

$$CG = \frac{\Sigma Wx}{W} = \frac{11{,}757.8 \text{ in.-LB}}{300 \text{ LB}} = 39.2 \text{ in. FROM NOSE}$$

MK 46 MODs 1 AND 2 — MAIN ASSEMBLY

23

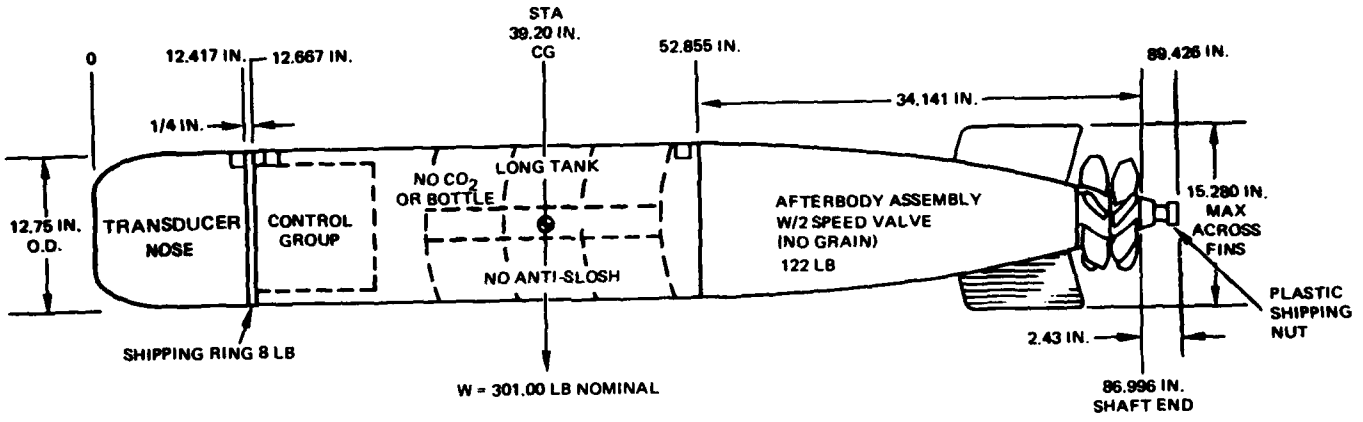

Item	Weight (lb)	x (in.)	Wx (in.-lb)
Nose (Bendix actual)	61.75	5.5	339.62
Shipping Ring	8.00	12.537	100.3
Control Group (Bendix actual)	33.50	19.75	661.62
Long Tank (No CO_2 or bottle) (No anti-slosh)	74.00	34.75	2,571.5
Afterbody Assembly (No grain, w/oil in engine)	122.00	66.105	8,064.8
Joints No. 1	0.50	11.7	5.85
No. 2	0.50	13.4	16.7
No. 3	0.50	52.1	26.05
Plastic Shipping Nut	0.25	88.0	22.00
	301.00	39.197 CG	11,798.44

MK 46 MOD 5 NEARTIP MAIN ASSEMBLY

23

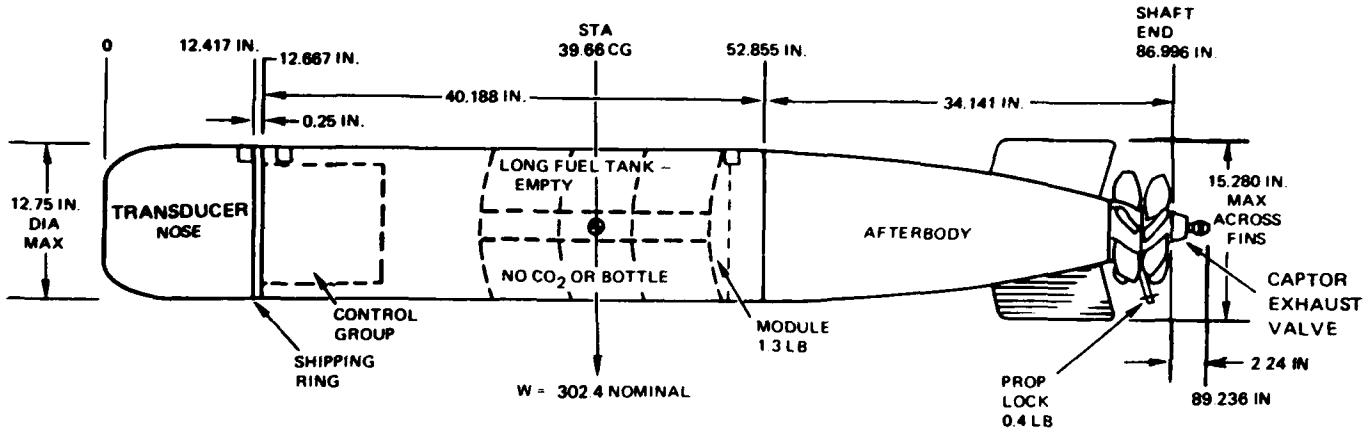

Item	Weight (lb) (Nominal)	x (in.)	Wx (in.-lb)
Nose	61.00	5.5	335.5
Shipping Ring	8.00	12.537	100.296
Control Group	31.00	19.75	612.25
Long Tank (no CO_2 or bottle)	76.00	34.75	2,641.00
Electronic Module	1.3	51.75	67.275
Afterbody (w/new cable; w/new water valve) (no grain, w/oil)	122.2	66.105	8,078.031
Joints: No. 1	0.5	11.7	5.85
No. 2	0.5	13.4	6.7
No. 3	0.5	52.1	26.05
Captor Exhaust Valve	1.0	88.0	88.00
Prop Lock	0.4	83.5	33.4
	302.4	39.66 CG	11,994.352

MK 46 MOD 4 CAPTOR – MAIN ASSEMBLY

24

MISCELLANEOUS INFORMATION

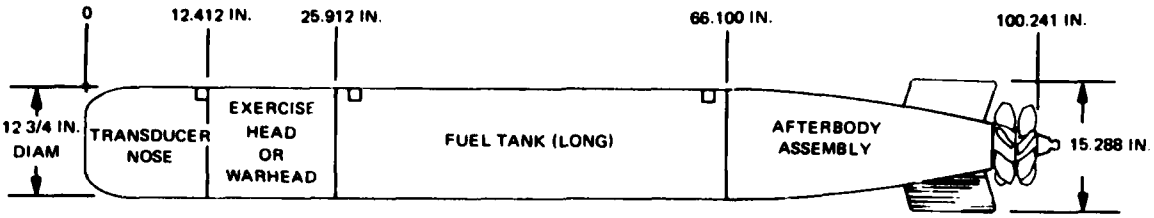

EVALUATION UNITS (1964)

MK 46 MOD 1 CG = $\Sigma Wx/W$.

Item	Weight (lb)	x (in.)		Wx (in.-lb)	
Nose - Transducer and Guidance	61.00	5.50	299.9 lb	335.5	
Warhead and Ex. Hd. (Lead wts = 74 lb at Sta. 21.71)	131.90	19.10		2520.0	
Control Group and Controller (Bendix new design)	31.00	33.00		1022.0	
Fuel Section, Metal Parts Only	70.00	49.00		3430.0	
CO_2 Bottle (filled) and Valves	3.00	49.50		148.5	
Joints: Forward	1.00	12.25		12.2	
Center	1.00	25.25		25.3	
Aft	1.00	65.25		65.2	
Afterbody					
Shell	32.00	75.35	119.7 lb	2780.0	9271.6
Engine Clevite HG-5.5B	25.00	81.10		2027.5	
Combustion Chamber and Grain	6.00	69.00		414.0	
Water Pump	4.00	70.35		282.0	
Fuel Pump	5.00	70.35		351.7	
Alternator	9.40	70.45		662.3	
Gear Train, Access Plate Support	7.00	73.85		147.5	
Actuators (3) D.C. Motors	8.00	86.55		692.4	
Rudders and Elevators (4)	5.00	88.65		443.2	
Shaft Assembly and Props	12.00	94.35		1132.2	
Warm Plug	.3	67.00		21.0	
Seawater Battery	1.00	67.85		67.8	
Miscellaneous: Valves, Tubes, Cables, Screws, etc.	5.00	50.00		250.0	
	419.60	40.2 = CG		16830.3	
Fuel	90.00	53		4760	
	509.6	42.4		21590.3	

26

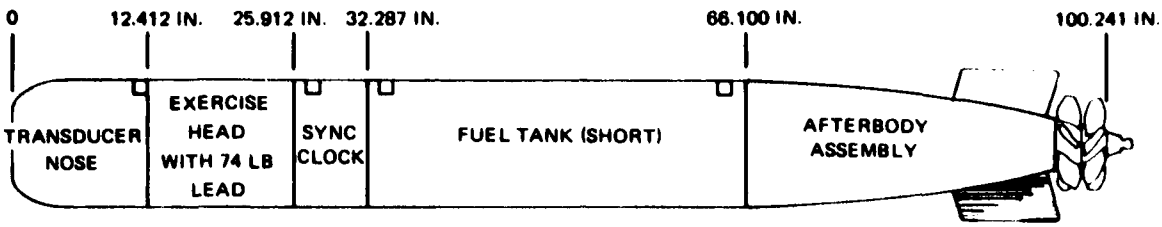

SYNC CLOCK VEHICLE (1965)

MK 46 MOD 1

Item	Weight (lb)	x (in.)	Wx (in.-lb)
Nose - Transducer	61.00	5.50	336.0
Exercise Head (74 lb lead)	132.00	19.10	2520.0
Sync Clock Unit 3D (shell only = 13 lb)	30.00	30.31	910.0
Control Group (Bendix)	31.00	39.5	1245.0
Short Fuel Tank, Metal Parts Only	56.00	53.0	2970.0
Afterbody, Complete	120.00	77.5	9300.0
Joints: Forward	.75	12.2	9.2
Center	.75	25.2	18.9
Extra for Clock	.75	32.0	24.0
Aft	.75	65.2	49.0
Total Dry	433.00	40.2 = CG	17382.1
Fuel	60.00	56.0	3400.0
	493.00	42.2 = CG	20782.1

DATA - WEIGHT, TRIM AND BUOYANCY

Condition	Weight (lb)	CG (in.)	CB (in.)	Displacement Seawater (lb)	Buoyancy (lb)
No Fuel, With Lead	433	40.2	42.35	392.8	-40
No Fuel, No Lead	359	44.4	42.75	385.8	+27
With Fuel, With Lead	493	42.2	42.35	392.8	-100
With Fuel, No Lead	419	45.9	42.75	385.8	-33

27

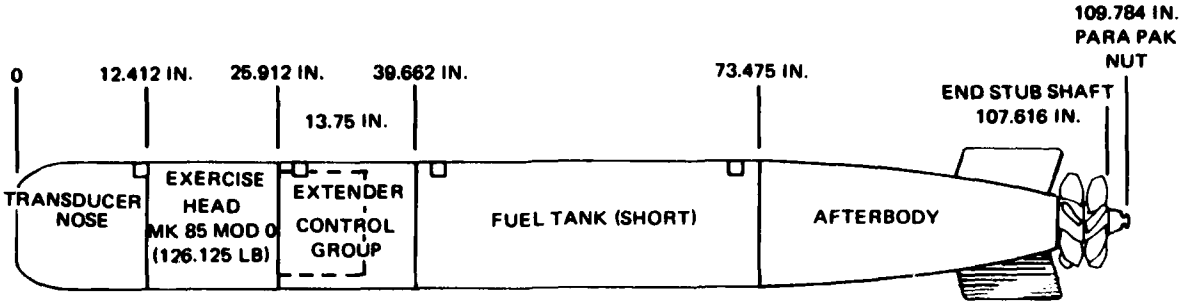

FLEET BUOYANCY CONFIGURATION – MK 46 MOD 1 (1969)

Item	Weight (lb)	x (in.)		Wx (in.-lb)
Nose - Transducer and Guidance	61.0	5.5		336.0
Exercise Head Mk 85 Mod 0 (74 lb lead @ 21.71 in.)	126.12	19.02		2400.0
Control Group	31.00	33.0		1022.0
Fuel Tank - SHORT				
Shell	33.00	57.16	59.7 CG	1885.0
Baffle Assy. (CO_2 bottle, 3.65 lb; Reg. Intl'k Cable, Ret. Ring, etc.)	25.15	63.2		1580.0
Extender, 13.75 in.	13.00	34.412		448.0
Afterbody Assembly	120.00	87.0		10440.0
Joints: Forward	.5	12.75		6.4
No. 2	.5	25.25		12.6
No. 3	.5	40.0		20.0
Aft	.5	73.0		36.5
Para Pak Nut (.98 lb) or Tube Nut (.78 lb)	Use 1.0	109.0		109.0
End of Run, No Fuel, With Lead - TOTAL	412.27	44.4 = CG		18295.5
PLUS FUEL	+59	64.00		3778.0
Beginning of Run, With Fuel, With Lead - TOTAL	471.27	46.8 = CG		22073.5
MINUS LEAD	–74.00	21.71		–1610.0
Beginning of Run, Abort, With Fuel, No Lead - TOTAL	397.27	51.5 = CG		20463.5
MINUS FUEL	–59.00	64.00		–3778.0
End of Run, Recovery, No Fuel, No Lead	338.27	49.2 = CG		16685.5

DATA - WEIGHT, TRIM AND BUOYANCY

Condition	Weight (lb)	CG (in.)	CB (in.)	Displacement Seawater (lb)	Buoyancy (lb)
No Fuel, With Lead					
End of Run and Shop Weight	412.27	44.4	46.03	427.52	+15.25
No Fuel, No Lead					
End of Run, Recovery	338.27	49.2	46.43	420.52	+82.25
With Fuel, With Lead					
Beginning of Run, Launch	471.27	46.8	46.03	427.52	–43.75
With Fuel, No Lead					
Beginning of Run, Abort	397.27	51.5	46.43	420.52	+23.25

TORPEDO MK 46 MODS
MAJOR COMPONENT WEIGHTS

	Weight (lb)
Transducer Nose Assembly	
Neartip (MK 46 Mod 5)	61
PIP (Product Improvement Program)	62
PTP (Point To Point)	63-3/4
Guidance Group (With Bucket Shields)	
Neartip (Transmitter 6.78 lb; Receiver 12.4 lb; Fwd Cap 1.82 lb)	21
PIP	22
PTP	23-3/4
Transducer Nose Shell	12
Transducer and Associated Equip.	18
Diaphragm, Backplate, etc.	10
Warhead	
MK 103 Mod 0 (H-6)	132
MK 103 Mod 1 (PBXN-103)	136.25
Exercise Head	
MK 85 Mod 1	132
MK 85 Mod 2	126
MK 85 Mod 3 (Fleet Configuration)	149
MK 85 Mod 4	126-1/2
MK 85 Mod 5 (Proofing Version of MK 85 - 1, Ex Head for Neartip)	132
Digital Data Recorder Ex Head – PL3277406	132
Control Group	
Neartip	33.1
PIP	29.2
PTP	31.7
Fuel Tank (Short), Complete Assembly (No Fuel)	58*
With Anti-Slosh Compartment	63**
Shell	33
Baffle Assembly	15
CO_2 Bottle (Full) and Holder	6
Tank Cable	4
Anti-Slosh Compartment	5
Fuel Tank (Long), Complete Assembly (No Fuel)	80†
Shell	43
Baffle Assembly	27

*Fuel capacity max = 59 lb

**Fuel capacity max = 57 lb

†Fuel capacity max = 87 lb

Otto Fuel II = 10.25 lb per gal. (0.0444 lb/in.^{3})

29

	Weight (lb)
Cable	4
CO_2 Bottle and Holder	6
Electronic Module (Captor Only)	1.3
Afterbody Assemblies (Includes Oil and Grain) For:	
MK 46 Mods 1 and 2	120
MK 46 Mod 4 (With Captor Cable and New Coolant Valve)	122.2
MK 46 Mod 5 (Neartip with 2 Speed Valve)	122.3
Afterbody Shell	32
Fins (4)	8
Actuator	8
Cable	1
Bronze, Sleeve, Seal and Bearing Assembly	4
Props and Nuts	7
Engine Assembly	28
Coolant Pump	4
Fuel Pump	5
Combustion Chamber	6
Alternator	10
Accessory Bulkhead	7
Captor Coolant Valve	1
Neartip 2 Speed Valve	2.3
Miscellaneous Components	
Positive Buoyant Extender (13-3/4 in. Long)	13
Sync Clock (6-3/8 in. Long) Assemblies	
NTS: Shell (10-1/2 lb), Transducer (3 lb), Clock (14-1/2 lb)	28
Autec: Shell (11 lb), Transducer (3 lb), Clock (10-1/2 lb)	24-1/2
Joint Rings, O-Ring and Cover Plate	1/2
Exhaust Valves: Captor (1.0 lb), Para-Pak (0.98 lb), Tube (0.78 lb)	Use 1
MK 19 Torpedo Recovery Locator Beacon (TRL)	6
45 KC Hit Locating Device (HLD)	3-1/2
9 KC Acoustic Locating Device (ALD)	2
Practice Exploder	1
MK 72 Mod 0 Sonar Transmitter	9-3/8
MK 84 Mod 0 Sonar Transmitter	12-5/8
Flooding Valve (0.85 lb)	Use 1
45 KC "Mini-Pinger"	1-1/2
Shipping Adaptor (2539238)	8
Shipping Nut, Prop Shaft (Plastic)	1/4
Prop Lock, Shipping (Captor)	1/2
Accessories	
MK 27 Mod 0 Stabilizer, Torpedo (ASROC)	21-1/2
MK 28 Mods 2 and 3 Stabilizer, Torpedo (Fixed Wing)	21-1/2
MK 31 Mod 0 Stabilizer, Torpedo (Helicopter)	9-1/2
MK 8 Mod 2 Cap, Nose, Torpedo (ASROC)	2-1/2
Bands and Accessories, Lanyards	≅12

OTHER USEFUL WEIGHT, BALANCE AND BUOYANCY INFORMATION AND COORDINATION DRAWINGS SHOWING INSTALLED BANDS AND ACCESSORIES*

Coordination Drawing, Torpedo MK 46 Mods 1 and 2 1579422
MK 46 Mod 1 Outline and Fitment Characteristics 2539302
Coordination Data, MK 46 Mod 5 3236121
MK 46 Mod 5 Outline and Fitment Characteristics 3236122

*These drawings are available in drawing microfilm file.