Report 7575-927031

LEVEL II

AD A069058

AALC FAN MODEL TEST PROGRAM
Contract N00014-78-C-0493 and
Purchase Order N00014-79-M-0021

J. L. Allison
Bell Aerospace Textron
Division of Textron, Inc.
Post Office Box 29307
New Orleans, La. 70189

DDC
RECEIVED
MAY 29 1979
C

May 8, 1979

Final Report

Unlimited distribution.

Prepared for

OFFICE OF NAVAL RESEARCH
800 North Quincy Street
Arlington, Va. 22217

Best Available Copy

DEPARTMENT OF THE NAVY
David W. Taylor Naval Ship Research and Development Center
Bethesda, Md. 20084

DDC FILE COPY

79 05 29 002

UNCLASSIFIED

SECURITY CLASSIFICATION OF THIS PAGE (When Data Entered)

REPORT DOCUMENTATION PAGE

READ INSTRUCTIONS BEFORE COMPLETING FORM

1. REPORT NUMBER: 7575-927031
2. GOVT ACCESS.ON NO.
3. RECIPIENT'S CATALOG NUMBER

4. TITLE (and Subtitle): AALC FAN MODEL TEST PROGRAM.

5. TYPE OF REPORT & PERIOD COVERED: Final, May 15, 1978-May 8, 1979

6. PERFORMING ORG. REPORT NUMBER

7. AUTHOR(s): J. L. Allison

8. CONTRACT OR GRANT NUMBER(s): N00014-78-C-0493, N00014-79-M-0021

9. PERFORMING ORGANIZATION NAME AND ADDRESS: Bell Aerospace Textron, Division of Textron, Inc. Post Office Box 29307 New Orleans, LA 70189

10. PROGRAM ELEMENT, PROJECT, TASK AREA & WORK UNIT NUMBERS

11. CONTROLLING OFFICE NAME AND ADDRESS: Office of Naval Research, 800 North Quincy Street, Arlington, Va. 22217

12. REPORT DATE: May 1979

13. NUMBER OF PAGES: 211

14. MONITORING AGENCY NAME & ADDRESS (if different from Controlling Office): DEPARTMENT OF THE NAVY, David W. Taylor Naval Ship Research and Development Center, Bethesda, Md. 20084

15. SECURITY CLASS (of this report): Unclassified

15a. DECLASSIFICATION/DOWNGRADING SCHEDULE

16. DISTRIBUTION STATEMENT (of this Report): Unlimited distribution.

This document has been approved for public release and sale; its distribution is unlimited.

17. DISTRIBUTION STATEMENT (of the abstract entered in Block 20, if different from Report)

18. SUPPLEMENTARY NOTES

19. KEY WORDS (Continue on reverse side if necessary and identify by block number): Centrifugal Fan. Volute. Diffuser. Test Rig. Air Cushion Vehicle. Flow Measurement. Velocity and Pressure Surveys. Inlets. Torque Measurement. Efficiency. Probe. Full-Scale Performance Prediction. Scaling. Fan Design.

20. ABSTRACT (Continue on reverse side if necessary and identify by block number)

A 12-inch-diameter centrifugal fan impeller, which was a model of an existing full-scale air cushion vehicle (ACV) fan impeller, was tested in five different volute configurations including one which modeled another existing full-scale ACV installation. It was shown that the suitably scaled impeller could serve as a replacement for the other full-scale craft fans. Numerous velocity and pressure surveys were performed, and their results are discussed.

DD FORM 1 JAN 73 1473 EDITION OF 1 NOV 65 IS OBSOLETE

UNCLASSIFIED

SECURITY CLASSIFICATION OF THIS PAGE (When Data Entered)

Best
Available
Copy

SUMMARY

The results of tests of a 12-inch diameter model fan impeller in several different volute casings are presented and discussed.

The impeller was a 1/5-scale model of the amphibious assault landing craft (AALC) JEFF(B) air cushion vehicle lift fan impellers, and one object of the tests was to determine its suitability for use in the AALC JEFF(A), whose original fans failed structurally.

In addition to performance testing, numerous velocity and pressure surveys were performed at speeds from 2500 to 4000 rpm for a total of five volute configurations. The results of all these tests are presented and discussed in detail.

Comparisons are made between the test results and previous predictions for the performance of this impeller in a Bell-designed compact volute and in the JEFF(A) volute.

Better efficiency was obtained in the Bell volute. However, performance in the JEFF(A) volute exceeded predictions. Consequently, it was possible to recommend the JEFF(B) impeller, scaled to a suitable size (about 4 feet in diameter), as a direct replacement for the original JEFF(A) impellers without any change to the fan casing or the gear ratio. The only other change needed is the provision of slightly modified inlet bellmouths.

Full-scale performance predictions are provided in dimensional and nondimensional form, and the choice of an exact full-scale impeller diameter is discussed.

ACCESSION for
NTIS
DDC
A

PREFACE

This report summarizes the work performed under Contract N00014-78-C-0493 and Purchase Order N00014-79-M-0021 issued by the Office of Naval Research. It covers the design and test of a suitably scaled model of the Bell Aerospace Textron lift fan, as built for the AALC JEFF(B) vehicle, in an optimum conventional volute and in a scale model of the AALC JEFF(A) fan volute.

The contract work efforts were monitored by the David W. Taylor Naval Ship Research and Development Center (DTNSRDC). The Technical Monitor for DTNSRDC was Mr. Z. George Wachnik. Testing was performed at the Air Cushion Vehicle Laboratory of Bell Aerospace Textron located in Buffalo, New York.

CONTENTS

		Page
	SUMMARY	1
	PREFACE	2
	CONTENTS	3
	LIST OF FIGURES	4
	LIST OF TABLES	9
	INTRODUCTION	10
Section 1	DESCRIPTION OF TEST ARTICLE	12
2	DESCRIPTION OF TEST SET-UP AND TEST METHOD	22
	Velocity and Pressure Surveys	35
	Comments on the Choice of Fan Speeds Used	36
3	GENERAL DESCRIPTION OF FAN CONFIGURATIONS TESTED	46
4	BELL VOLUTE CONFIGURATIONS, DESCRIPTION AND TEST RESULTS	49
	Configurations 1 and 2	49
	Configuration 3	85
	Configuration 4	113
5	JEFF(A) VOLUTE AND DIFFUSER, CONFIGURATION 5	137
6	DISCUSSION OF RESULTS	169
	Performance and Efficiency	169
	Pressure and Velocity Surveys	175
	Inlet Bellmouth Surveys	175
	Blade Inlet and Exit Surveys	176
	Volute and Diffuser Exit Plane Surveys	178
	Miscellaneous Tests	179
7	FULL-SCALE PERFORMANCE PREDICTIONS	181
8	CONCLUSIONS	200
9	RECOMMENDATIONS	202
	BIBLIOGRAPHY	203
	APPENDIX A, DATA REDUCTION PROGRAM FOR FAN PERFORMANCE	

FIGURES

		Page
FIGURE 1	JFFF(B) Full-Scale Impeller.	13
2	8-In-Dia Model from Which JFFF(B) Impeller Was Developed	14
3	12-In-Dia JFFF(B) Model Impeller, Inlet Side	15
4	12-In-Dia JFFF(B) Model Impeller, Drive Side	16
5	Bell Lines Dwg of 12-In-Dia JFFF(B) Model Impeller . .	17
6	Centro Shop Dwg of 12-In-Dia JFFF(B) Model Impeller. . .	18
7	12-In-Dia Model in Volute, Inlet Side.	20
8	12-In-Dia Model in Volute, Drive Side.	21
9	Sketch of Overall Test Setup for Fan Performance Tests .	23
10	Volute and Diffuser Arrangement as Used For Config 1 & 2	24
11	Overall Test Setup.	25
12	General View of Test Setup	26
13	Method of Measuring Input Torque to Fan Assy	27
14	Fan Drive Motor Assy	28
15	Variable Speed Fan Drive System.	29
16	Fan Speed Measuring System	30
17	AMCA Standard Fan Flow Measurement Setup	31
18	Venturimeter Nozzle Details.	32
19	Methods of Measuring Pressure.	33
20	Wedge Traverse Probe (Photo)	37
21	Wedge Traverse Probe (Diagram)	38
22	Wedge Traverse Probe Pressure Connections.	39
23	Method of Use of Wedge Traverse Probe (Photo).	40
24	Method of Measuring Angle of Air Discharge from Impeller	41
25	Inlet Bellmouth Pressure Measurement Locations	42
26	Inlet Bellmouth Swirl Measurement Locations.	43
27	Impeller Blade Inlet and Discharge Survey Locations. . .	44
28	Inlet Bellmouth Details.	48
29	Bell Compact Volute, Config 1.	50
30	Volute and Diffuser Arrangement, Config 1	51
31	Location of Inlet Bellmouth, Config 1, Condition 1 . . .	53
32	Location of Inlet Bellmouth, Config 1, Condition 2 . . .	54
33	Location of Inlet Bellmouth, Config 1, Condition 3 . . .	55
34	Configuration 1 Performance Composite.	56
35	Configuration 1 Performance, 2500 RPM.	58
36	Configuration 1 Performance, 3000 RPM.	60
37	Configuration 1 Performance, 3500 RPM.	62
38	Effect of Bellmouth Position of Performance, Config 1. .	63
39	Bell Compact Volute, Config 2.	64
40	Volute and Diffuser Arrangement, Config 2.	65
41	Configuration 2 Performance Composite.	66
42	Configuration 2 Performance, 2500 RPM.	68
43	Configuration 2 Performance, 3000 RPM.	70
44	Configuration 2 Performance, 3500 RPM.	72

FIGURES

		Page
FIGURE 1	JEFF(B) Full-Scale Impeller.	13
2	8-In-Dia Model from Which JEFF(B) Impeller Was Developed	14
3	12-In-Dia JEFF(B) Model Impeller, Inlet Side	15
4	12-In-Dia JEFF(B) Model Impeller, Drive Side	16
5	Bell Lines Dwg of 12-In-Dia JEFF(B) Model Impeller . . .	17
6	Centro Shop Dwg of 12-In-Dia JEFF(B) Model Impeller. . .	18
7	12-In-Dia Model in Volute, Inlet Side.	20
8	12-In-Dia Model in Volute, Drive Side.	21
9	Sketch of Overall Test Setup for Fan Performance Tests .	23
10	Volute and Diffuser Arrangement as Used For Config 1 & 2	24
11	Overall Test Setup.	25
12	General View of Test Setup	26
13	Method of Measuring Input Torque to Fan Assy	27
14	Fan Drive Motor Assy	28
15	Variable Speed Fan Drive System.	29
16	Fan Speed Measuring System	30
17	AMCA Standard Fan Flow Measurement Setup	31
18	Venturimeter Nozzle Details.	32
19	Methods of Measuring Pressure.	33
20	Wedge Traverse Probe (Photo)	37
21	Wedge Traverse Probe (Diagram)	38
22	Wedge Traverse Probe Pressure Connections.	39
23	Method of Use of Wedge Traverse Probe (Photo).	40
24	Method of Measuring Angle of Air Discharge from Impeller	41
25	Inlet Bellmouth Pressure Measurement Locations	42
26	Inlet Bellmouth Swirl Measurement Locations.	43
27	Impeller Blade Inlet and Discharge Survey Locations. . .	44
28	Inlet Bellmouth Details.	48
29	Bell Compact Volute, Config 1.	50
30	Volute and Diffuser Arrangement, Config 1.	51
31	Location of Inlet Bellmouth, Config 1, Condition 1 . . .	53
32	Location of Inlet Bellmouth, Config 1, Condition 2 . . .	54
33	Location of Inlet Bellmouth, Config 1, Condition 3 . . .	55
34	Configuration 1 Performance Composite.	56
35	Configuration 1 Performance, 2500 RPM.	58
36	Configuration 1 Performance, 3000 RPM.	60
37	Configuration 1 Performance, 3500 RPM.	62
38	Effect of Bellmouth Position of Performance, Config 1. .	63
39	Bell Compact Volute, Config 2.	64
40	Volute and Diffuser Arrangement, Config 2.	65
41	Configuration 2 Performance Composite.	66
42	Configuration 2 Performance, 2500 RPM.	68
43	Configuration 2 Performance, 3000 RPM.	70
44	Configuration 2 Performance, 3500 RPM.	72

FIGURES (Cont)

		Page
FIGURE 45	Configuration 2 Performance, 4000 RPM.	74
46	Bell Compact Volute, Config 3.	75
47	Volute and Diffuser Arrangement, Config 3.	76
48	Location of Inlet Bellmouth, Config 3.	77
49	Configuration 3 Performance Composite.	78
50	Configuration 3 Performance, 2500 RPM.	80
51	Configuration 3 Performance, 3000 RPM.	82
52	Configuration 3 Performance, 3500 RPM.	84
53	Inlet Bellmouth Velocity Survey, Oper Point A, Config 3.	86
54	Inlet Bellmouth Velocity Survey, Oper Point B, Config 3.	87
55	Inlet Bellmouth Velocity Survey, Oper Point C, Config 3.	88
56	Volute Exit Plane Press. Measurement Locations, Config 3	89
57	Volute Exit Plane Survey, Oper Point A, Config 3	90
58	Volute Exit Plane Survey, Oper Point B, Config 3	91
59	Volute Exit Plane Survey, Oper Point C, Config 3	92
60	Volute Exit Plane Survey, Oper Point D, Config 3	93
61	Impeller Blade Inlet Flow Angle Survey, Oper Point A, Config 3.	94
62	Impeller Blade Inlet Flow Angle Survey, Oper Point B, Config 3.	95
63	Impeller Blade Inlet Flow Angle Survey, Oper Point C, Config 3.	96
64	Impeller Blade Velocity Survey, Oper Point A, Config 3 .	97
65	Impeller Blade Velocity Survey, Oper Point B, Config 3 .	98
66	Impeller Blade Velocity Survey, Oper Point C, Config 3 .	99
67	Impeller Blade Inlet Press. Survey, Oper Point A, Config 3.	100
68	Impeller Blade Inlet Press. Survey, Oper Point B, Config 3.	101
69	Impeller Blade Inlet Press. Survey, Oper Point C, Config 3.	102
70	Impeller Blade Exit Flow Angle Survey, Oper Point A, Config 3.	103
71	Impeller Blade Exit Flow Angle Survey, Oper Point B, Config 3.	104
72	Impeller Blade Exit Flow Angle Survey, Oper Point C, Config 3.	105
73	Impeller Blade Exit Press. Survey, Oper Point A, Config 3.	106
74	Impeller Blade Exit Press. Survey, Oper Point B, Config 3.	107
75	Impeller Blade Exit Press. Survey, Oper Point C, Config 3.	108

FIGURES (Cont)

		Page
FIGURE 76	Volute Internal Press. Exploration Diagram, Config 3 . .	109
77	Volute Internal Press. Exploration Results, Config 3 . .	110
78	Inlet Bellmouth Longitudinal Press. Survey, Operating Point B, Config 3	111
79	Inlet Bellmouth Longitudinal Velocity Survey, Oper Point B, Config 3	112
80	Log Spiral Volute, Config 4.	115
81	Volute and Diffuser Arrangement, Config 4.	116
82	Configuration 4 Performance Composite.	117
83	Configuration 4 Performance, 2500 RPM.	119
84	Configuration 4 Performance, 3000 RPM.	121
85	Configuration 4 Performance, 3000 RPM (Extra Points) . .	123
86	Configuration 4 Performance, 3500 RPM.	125
87	Configuration 4 Performance, 4000 RPM.	127
88	Volute Exit Plane Press. Measurement Locations, Config 4	128
89	Volute Exit Plane Survey, Oper Point A, Config 4	129
90	Volute Exit Plane Survey, Oper Point B, Config 4	130
91	Volute Exit Plane Survey, Oper Point C, Config 4	131
92	Impeller Blade Inlet Flow Angle Survey, Oper Point B, Config 4.	132
93	Impeller Blade Velocity Survey, Oper Point B, Config 4 .	133
94	Impeller Blade Inlet Press. Survey, Oper Point B, Config 4.	134
95	Impeller Blade Exit Flow Angle Survey, Oper Point B, Config 4.	135
96	Impeller Blade Exit Press. Survey, Oper Point B, Config 4.	136
97	JEFF(A) Volute, Config 5	138
98	JEFF(A) Volute and Diffuser Arrangement, Config 5. . . .	139
99	JEFF(A) Volute Details, Config 5, ALRC Dwg 185638-2. . .	140
100	JEFF(A) Volute Details, Config 5, ALRC Dwg 185638-3. . .	141
101	JEFF(A) Diffuser Details, Config 5, ALRC Dwg 185638-4. .	142
102	Config 5 Performance Composite	143
103	Config 5 Performance, 2500 RPM	145
104	Config 5 Performance, 3000 RPM	147
105	Config 5 Performance, 3500 RPM	149
106	Config 5 Performance, 4000 RPM	151
107	Inlet Bellmouth Velocity Survey, Oper Point A, Config 5.	152
108	Inlet Bellmouth Velocity Survey, Oper Point B, Config 5.	153
109	Inlet Bellmouth Velocity Survey, Oper Point C, Config 5.	154
110	Volute Exit Plane Press. Measurement Locations, Config 5.	155
111	Volute Exit Plane Velocity Survey, Oper Point A, Config 5.	156

FIGURES (Cont)

		Page
FIGURE 112	Volute Exit Plane Velocity Survey, Oper Point B, Config 5.	157
113	Volute Exit Plane Velocity Survey, Oper Point C, Config 5.	158
114	Diffuser Exit Plane Press. Measurement Locations, Config 5.	159
115	Diffuser Exit Plane Survey, Oper Point B, Config 5 . . .	160
116	Diffuser Exit Plane Survey, Oper Point C, Config 5 . . .	161
117	Other Diffuser Exit Plane Survey, Oper Point C, Config 5	162
118	Diffuser Exit Plane Survey, Oper Point D, Config 5 . . .	163
119	Impeller Blade Inlet Flow Angle Survey, Oper Point B, Config 5.	164
120	Impeller Blade Velocity Survey, Oper Point B, Config 5 .	165
121	Impeller Blade Inlet Pressure Survey, Oper Point B, Config 5.	166
122	Impeller Blade Exit Flow Angle, Oper Point B, Config 5 .	167
123	Impeller Blade Exit Press. Survey, Oper Point B, Config 5.	168
124	Comparison of Performance of Config 1, 2, and 3.	170
125	Comparison of Performance of Config 3 and 4.	171
126	Comparison of Performance of Config 3 and 5.	172
127	Impeller Blade Exit Velocity Survey Comparison	173
128	Effect of Reynolds Number on Efficiency.	182
129	Full-Scale Characteristics of JEFF(B) Impeller in Bell-Designed Volute, Proposal Predictions	185
130	Full-Scale Characteristics of JEFF(B) Impeller in JEFF(A) Volute, Proposal Predictions.	186
131	Full-Scale Performance of JEFF(B) Impeller in Bell-Designed Volute, Proposal Predictions (59°F).	187
132	Full-Scale Performance of JEFF(B) Impeller in Bell-Designed Volute, Proposal Predictions (100°F)	188
133	Full-Scale Performance of JEFF(B) Impeller in JEFF(A) Volute, Proposal Predictions (59°F)	189
134	Full-Scale Performance of JEFF(B) Impeller in JEFF(A) Volute, Proposal Predictions (100°F).	190
135	Model and Full-Scale Nondimensional Performance Characteristics of JEFF(B) Impeller in Bell-Designed Volute	191
136	Model and Full-Scale Nondimensional Performance Characteristics of JEFF(B) Impeller in JEFF(A) Volute . . .	192
137	Full-Scale Performance of JEFF(B) Impeller in Bell-Designed Volute, Based on Model Test Data (59°F). . .	193
138	Full-Scale Performance of JEFF(B) Impeller in Bell-Designed Volute, Based on Model Test Data (100°F) . .	194

FIGURES (Cont)

		Page
FIGURE 139	Full-Scale Performance of JEFF(B) Impeller in JEFF(A) Volute, Based on Model Test Data (59°F)	195
140	Full-Scale Performance of JEFF(B) Impeller in JEFF(A) Volute, Based on Model Test Data (100°F).	196
141	Full-Scale Performance of JEFF(B) Impeller in Bell-Designed Volute, Based on Model Test Data (59°F), 49.5-Inch Diameter.	197
142	Full-Scale Performance of JEFF(B) Impeller in JEFF(A) Volute, Based on Model Test Data (59°F), 49.5-In Dia.	198
143	Relationship of Speed and Diameter for JEFF(B) Impeller in JEFF(A) Volute to Give Desired JEFF(A) Performance	199

TABLES

		Page
TABLE 1	Model Fan Impeller Leading Particulars.	19
2	List of Equipment Used for 1/5-Scale JEFF(B) Impeller Tests.	34
3	Summary of Configurations and Conditions Tested	47
4	Bell Compact Volute Basic Spiral Definition (Configurations 1, 2, and 3.	52
5	Fan Speed 2500 RPM, Configuration 1	57
6	Fan Speed 3000 RPM, Configuration 1	59
7	Fan Speed 3500 RPM, Configuration 1	61
8	Fan Speed 2500 RPM, Configuration 2	67
9	Fan Speed 3000 RPM, Configuration 2	69
10	Fan Speed 3500 RPM, Configuration 2	71
11	Fan Speed 4000 RPM, Configuration 2	73
12	Fan Speed 2500 RPM, Configuration 3	79
13	Fan Speed 3000 RPM, Configuration 3	81
14	Fan Speed 3500 RPM, Configuration 3	83
15	Log Spiral Definition	114
16	Fan Speed 2500 RPM, Configuration 4	118
17	Fan Speed 3000 RPM, Configuration 4	120
18	Fan Speed 3000 RPM, Extra Points, Configuration 4 . . .	122
19	Fan Speed 3000 RPM, Configuration 4	124
20	Fan Speed 4000 RPM, Configuration 4	126
21	Fan Speed 2500 RPM, Configuration 5	144
22	Fan Speed 3000 RPM, Configuration 5	146
23	Fan Speed 3500 RPM, Configuration 5	148
24	Fan Speed 4000 RPM, Configuration 5	150

INTRODUCTION

The fans for the amphibious assault landing craft (AALC) JEFF(B), which is an air cushion vehicle, were developed as the result of a long research and test program. Aerodynamically, the fans proved satisfactory in a 1/6-scale, radio-controlled, free flight model and in the full-scale craft. Structurally, the full-scale fans have proved to be extremely robust, withstanding the normal rigors of operation over the beach and rough terrain, and even the ingestion of large foreign objects with only minor damage.

When structural problems developed with the fans in the AALC JEFF(A), Bell Aerospace Textron proposed the use of a scaled-down version of the JEFF(B) fan impeller as a potential replacement. However, the JEFF(B) impellers operate in a unique double-discharge, Siamese-twin volute arrangement, and the exact performance in a conventional single-discharge volute was not known. Accordingly, it was proposed to conduct a test program to determine the performance in a Bell-designed compact volute and in the existing JEFF(A) volute at a sufficiently large model scale to provide good confidence in scaling the results to full-size fan performance. With this in mind, an impeller diameter of 12 inches was chosen. This was also a good practical choice since a suitable test rig which could be readily modified was available which had been used previously for a double-width 12-inch diameter impeller.

Based on the promising full-scale performance predictions which indicated that the JEFF(A) lift system requirements could be met with a scaled JEFF(B) impeller at lower rotational speed, a decision was made by the Navy to issue a contract to carry out model tests. The tests were intended to verify the predictions and to establish the capabilities of the proven JEFF(B) impeller design in conventional volutes.

A 12-inch diameter model impeller was designed and procured from Centro Corporation. The test rig at the Air Cushion Vehicle Laboratory, Bell Aerospace Textron, Buffalo, New York, was renovated and modified to accept the new single-width impeller. Preliminary tests were made using the existing volute spiral to establish the test procedure and data reduction method.

Modifications were made to the volute geometry to better suit the new impeller. After a second change to the cut-off position and a small increase of volute width, results were obtained which matched the predictions almost exactly. For this configuration, extensive velocity and pressure surveys were performed at the inlet, inside the volute, and at the discharge section. All these results are fully discussed later in the report.

In independent research and development (IR&D) fan programs in previous years, good results had been obtained with log spiral volutes, and it was said during the proposal discussions that it was intended to test the impeller in such a volute. Accordingly, a log spiral was designed with a spiral angle of 10.9 degrees, and

a volute was constructed on this basis. However, preliminary test results were disappointing compared with those obtained with the much more compact volute already tested. In view of the strict limitations of hours for this program, it was decided not to pursue this approach, and after velocity and pressure surveys had been taken, the rig was dismantled in preparation for the installation of the JEFF(A) volute and diffuser configuration.

The JEFF(A) fan installation includes several features which are less than ideal if optimum performance is sought. For instance, there is a sharp change of direction at the volute discharge and an offset in the diffuser which is apparently necessary to accommodate a mismatch between the fan discharge and the lift system opening. Allowance had to be made for these features and for the reduced volute volume ratio in making predictions of the performance of the JEFF(B) impeller in the JEFF(A) volute. In the event, the corrections applied proved to be too pessimistic and the JEFF(B) impeller performed better than expected in the JEFF(A) volute, though not as efficiently as in the Bell-designed volute. However, the results were sufficiently encouraging that a recommendation was made to simply install scaled-down JEFF(B) impellers directly in the JEFF(A) existing volutes.

Once again, extensive velocity and pressure surveys were carried out, including surveys on the inlet and outlet of the diffuser. As expected, a region of the flow separation was identified in the JEFF(A) diffuser.

From the test data for the best Bell volute and the JEFF(A) volute, full-scale fan performance predictions were made in both nondimensional and dimensional form. It was clearly shown that the JEFF(A) lift system requirements could be met with either volute configuration with reduced fan rotational speed, and therefore, with lower stresses than in the original design. In addition, the geometry of the JEFF(B) impeller provides inherently greater structural strength due to its smaller blade width ratio and steeper blade angle, apart from the possible advantages of using mechanical fastening construction methods instead of welding.

1. DESCRIPTION OF TEST ARTICLE

The JEFF(B) fans have centrifugal, backward sloped airfoil impellers of the double-width, double-inlet type. Figure 1 is a photograph of a JEFF(B) impeller prior to installation in the craft. Details of the construction can be clearly seen. Figure 2 is a photograph of the 8-inch-diameter model impeller used in the early development testing. Subsequently, a 26-inch-diameter model was constructed and tested prior to the final full-scale fan design for manufacture.

Figures 3 and 4 are photographs of the single-width impeller model which was the subject of the tests documented in this report. Figure 5 is a copy of the lines drawing prepared by Bell from which Centro Corporation made the manufacturing drawing shown in figure 6. Leading particulars of the design are shown in table 1. Coordinates of the blade profile are shown on figure 5.

Figures 7 and 8 show the model impeller mounted in the Plexiglas volute and dismantled from the rig, the inlet, and the drive sides, respectively.

By agreement with the customer, no attempt was made to represent at model scale the rivet heads and small nuts and bolts used in the full-scale blade attachment. Otherwise, great care was taken to duplicate faithfully the geometry of the aerodynamic flow path. Slight external modification of the blade shroud was required to accommodate the bolts holding the fan together. However, the heads of the bolts and the nuts are recessed to minimize friction drag.

Since the impeller was required to be of single width, an adequate backplate was required for structural reasons. Also, the fan was driven from the back, so no bearing support was required in front of the inlet. However, the shaft stub at the inlet was made to true scale and provided with a removable bullet fairing so that the shaft could be extended forward if, in future testing, it is desired to simulate the presence of a front bearing and/or gearbox arrangement.

The model is constructed of aluminum alloy with high-strength plastic blades and a steel shaft. Absolutely no problems of any kind were experienced with the model fan impeller throughout the test program.

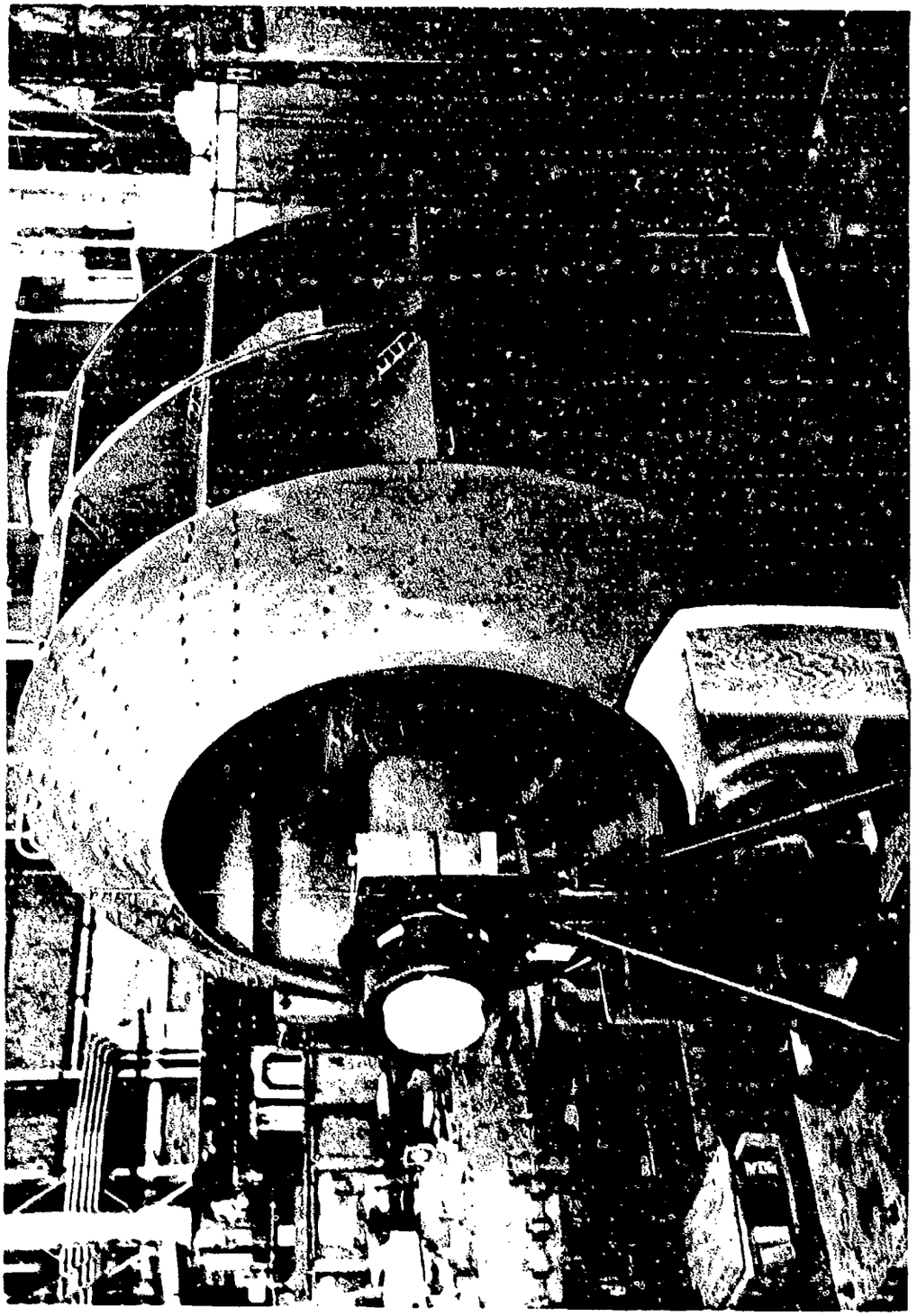

Figure 1 JEFF(B), FULL-SCALE IMPELLER

Figure 2 8-INCH-DIAMETER MODEL FROM WHICH JEFF(B) IMPELLER WAS DEVELOPED

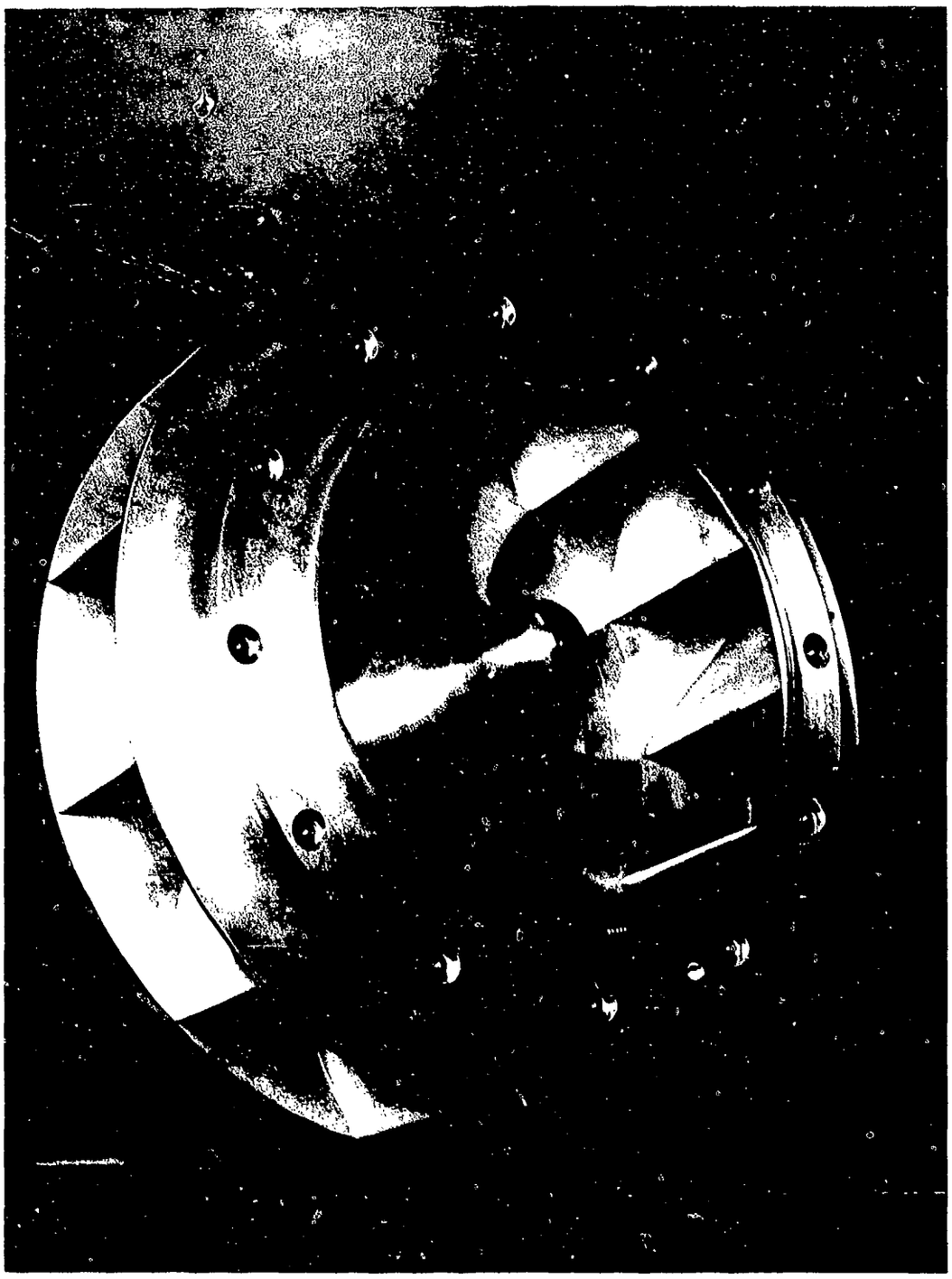

Figure 3 12-INCH-DIAMETER JEFF(B) MODEL IMPELLER, INLET SIDE

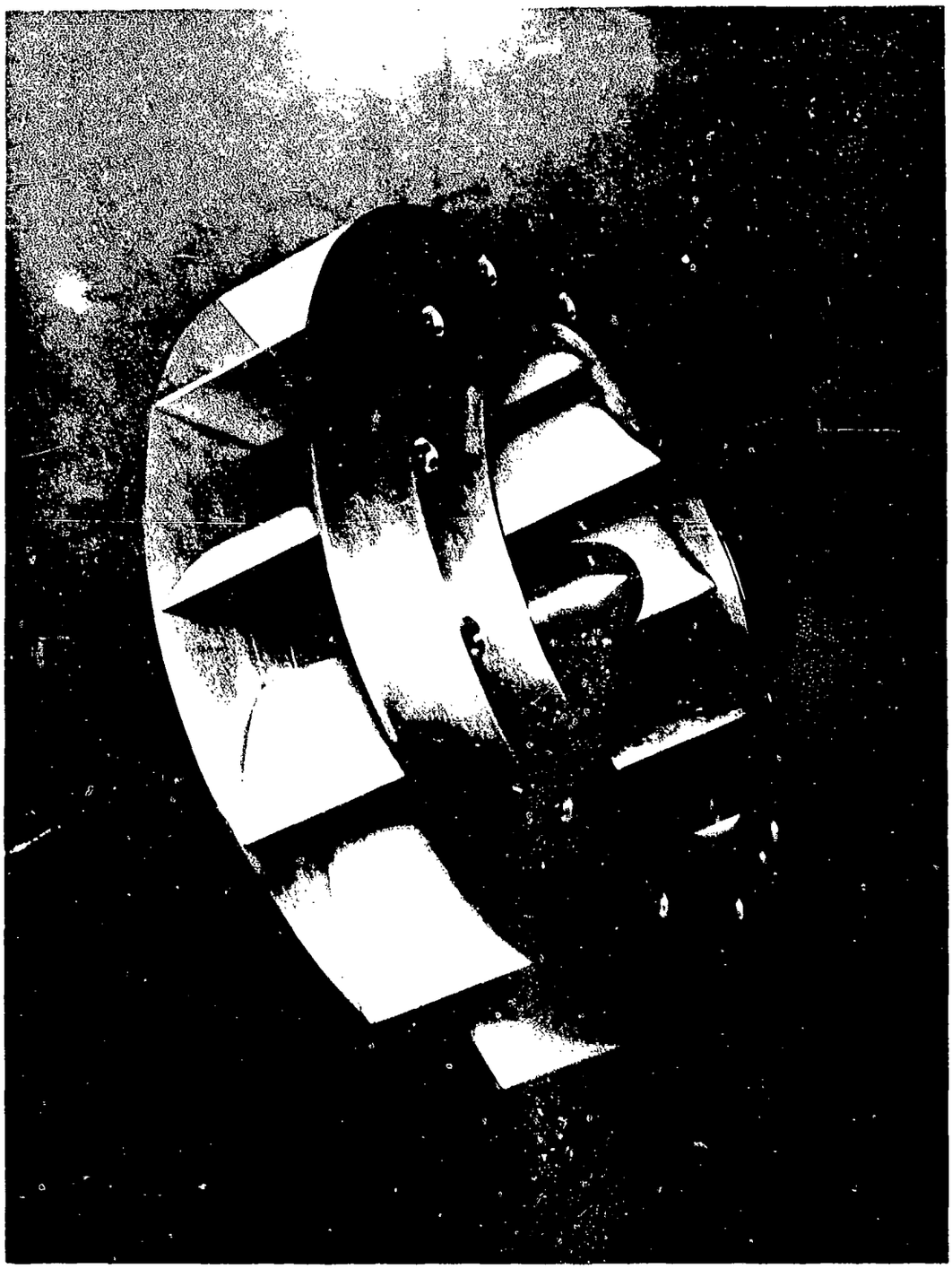

Figure 4. 12-INCH-DIAMETER JTFF(B) MODEL IMPELLER, DRIVE SIDE

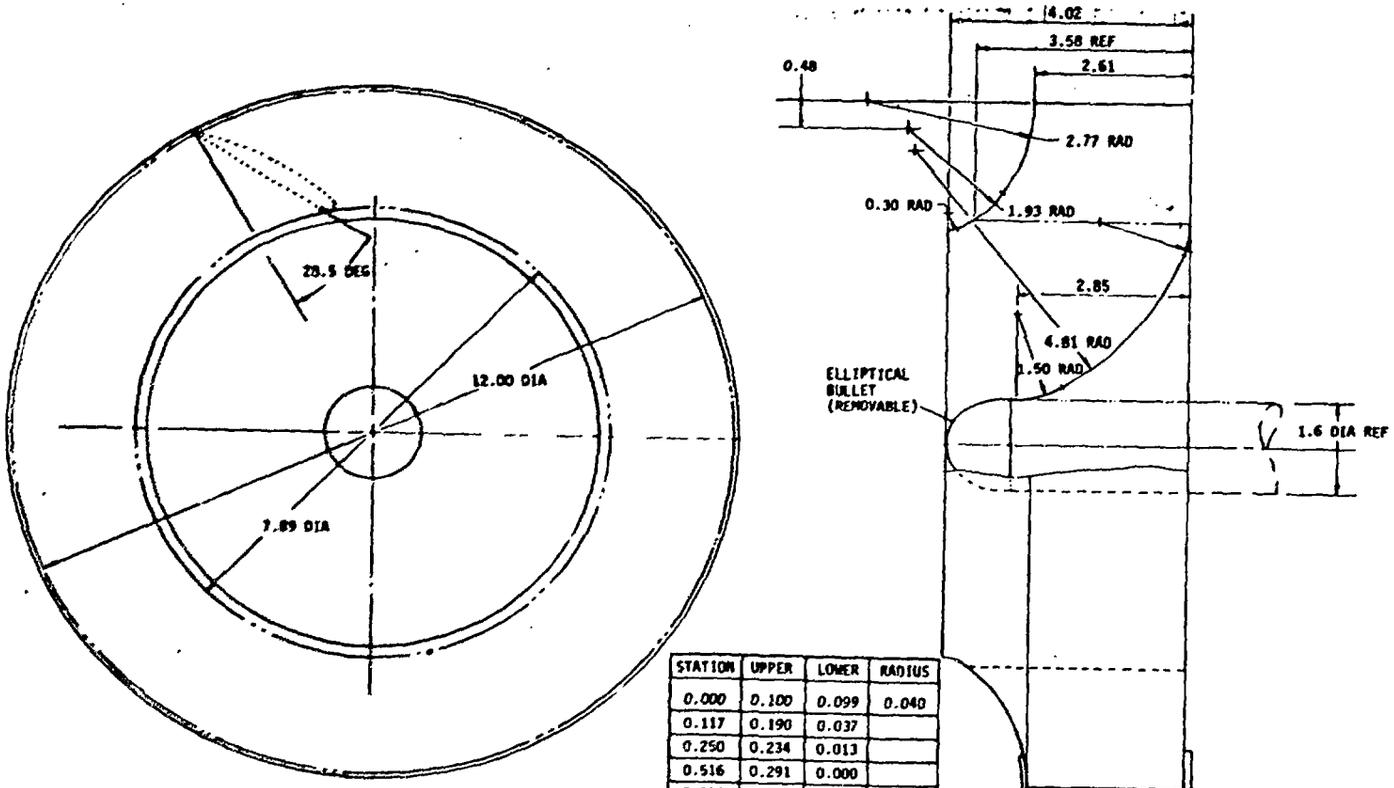

STATION	UPPER	LOWER	RADIUS
0.000	0.100	0.099	0.040
0.117	0.190	0.037	
0.250	0.234	0.013	
0.516	0.291	0.000	
0.916	0.317	0.000	
1.319	0.300	0.000	
1.716	0.248	0.000	
2.117	0.169	0.000	
2.649	0.023	0.023	0.023

Figure 5 BELL LINES DRAWING OF 12-INCH-DIAMETER JEFF(B) MODEL IMPELLER

Bell Aerospace TEXTRON
Division of Textron Inc

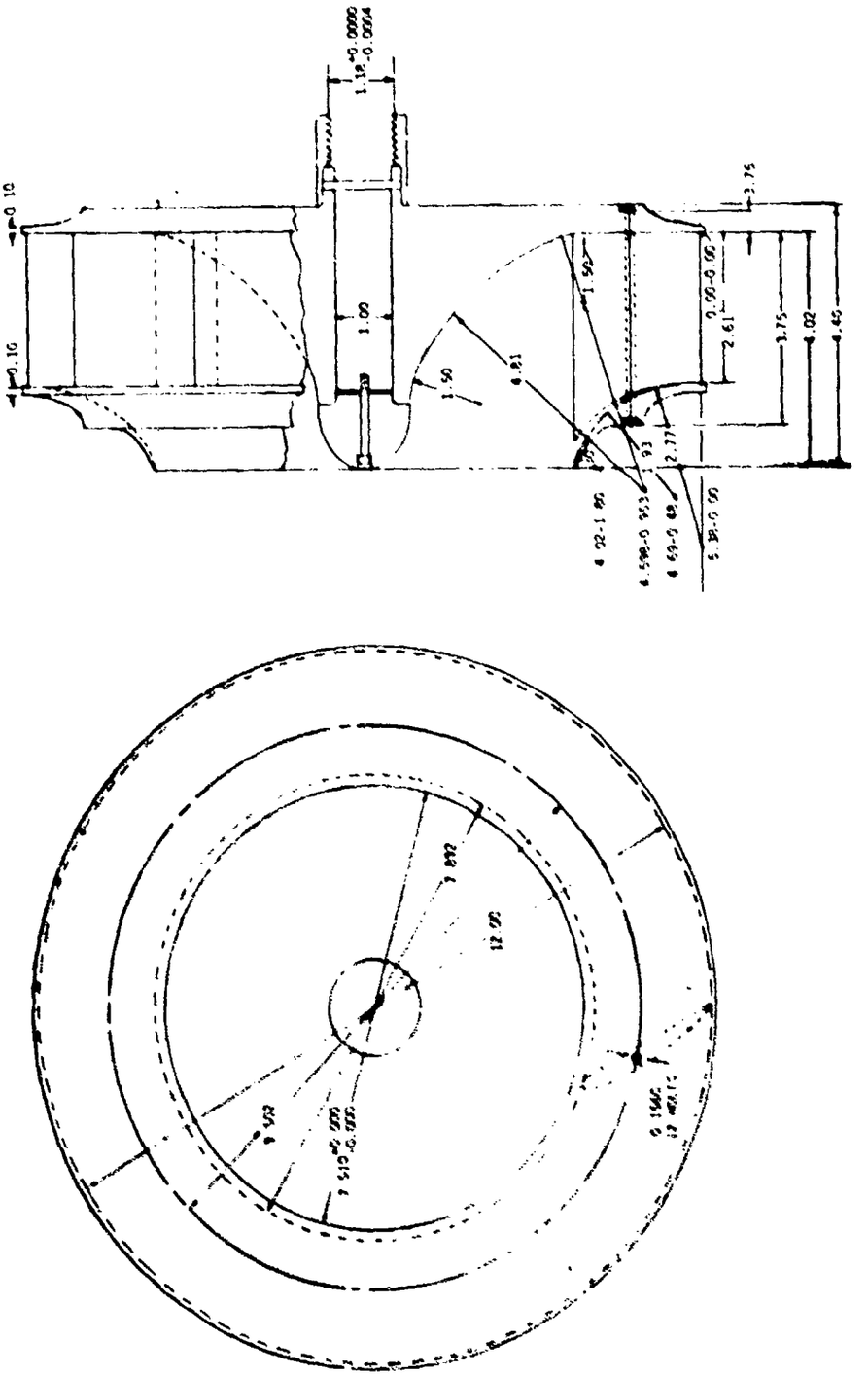

Figure 6. CENTPO SHOP DRAWING OF 12-INCH-DIAMETER JEFF(B) MODEL IMPELLER

TABLE 1. MODEL FAN IMPELLER LEADING PARTICULARS

Type	Centrifugal, Backward Sloped Airfoil
Configuration	Single Width, Single Inlet (SWSI)
Diameter	12 Inches at Blade Trailing Edge (TE)
Diameter at Blade Leading Edge (LE)	7.89 Inch
Number of Blades	12
Blade Angle	61.5 Degrees, Flatside of Blade to Tangent at TE
Blade Chord	2.649 Inch
Blade Thickness	0.317 Inch Maximum
Blade t/c Ratio	12% Maximum
Blade Span at Tip	2.61 Inch
Blade Span at LE	3.58 Inch
Blade Width Ratio at Tip	0.2175
Shaft Diameter	1.6 Inch

Figure 7 12-INCH-DIAMETER MODEL IN VOLUTE, INLET SIDE

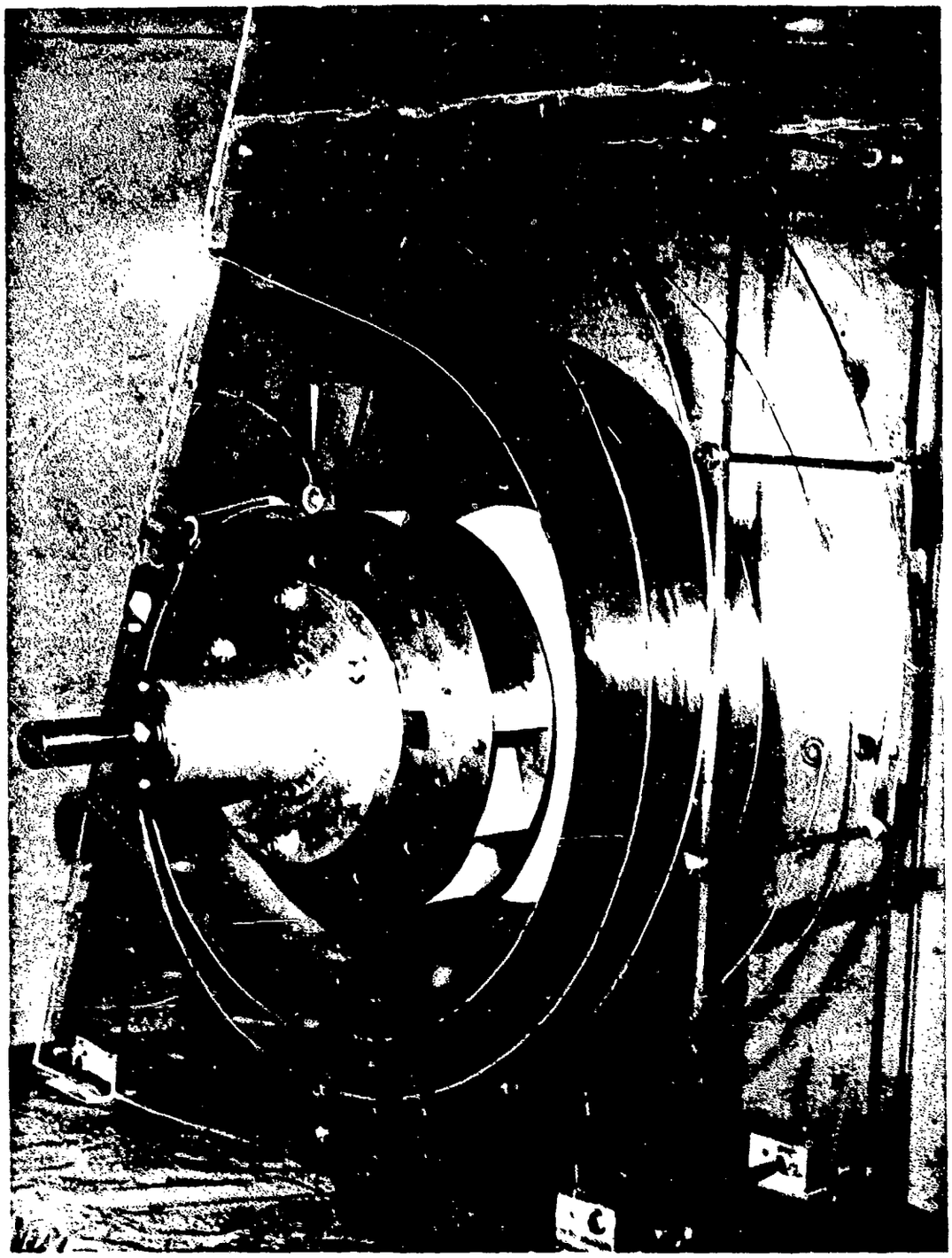

Figure 8. 12-INCH-DIAMETER MODEL IN VOLUTE, DRIVE SIDE

2. DESCRIPTION OF TEST SET-UP AND TEST METHOD

Bell employs an experimental fan test set-up which is economical to fabricate, easy to change, and leads to accurate and consistent results.

The fan volute is formed by cutting the required spiral as a groove in each of two rectangular sheets of Plexiglas 0.5-inch thick. A strip of aluminum sized to the required volute width plus a small allowance for the depth of the grooves is then wrapped around this spiral, fitting into the grooves to a depth of 0.1 inch. The assembly is held together with a number of threaded tie-rods. Circular holes are cut in the Plexiglas to allow installation of two inlet bellmouths for a double-width fan, or one bellmouth for a single-width fan and a shaft bearing mount. Annular shims are used to vary the bellmouth penetration of the impeller systematically to determine the optimum axial position.

The Plexiglas volute assembly with the impeller installed is mounted on a strong table. On the same table is a motor whose shaft height may be adjusted by suitable shims to align exactly with the impeller shaft centerline. A sketch of the arrangement is shown in figure 9. Photographs of the rig taken during previous tests are shown in figures 10, 11, and 12.

The motor is mounted on antifriction trunion bearings so that it is free to pivot axially. Axial rotation, however, is limited to a few degrees by stops. A torque arm carrying a scale pan is attached to the motor casing on one side, and an adjustable counterweight is attached on the other. When there is no load on the motor, the torque arm floats freely between the stops, and a pointer attached to it settles at a datum (zero torque) point on a small scale. The arrangement is shown diagrammatically in figure 13 and a photograph from a previous double-width fan test is shown in figure 14.

Figure 15 shows the method used to control the motor (fan) speed and figure 16 shows the digital speed measurement arrangement diagrammatically. The fan speed could be controlled to within 0.1 rpm for speeds from 2500 to 4000 rpm.

When load is applied to the motor due to turning the fan, the torque reaction on the motor casing tends to rotate it until the torque arm rests against the stop. Weights are added to the scale pan until the pointer returns to the datum mark on the scale. The weight added to the scale pan multiplied by the length of the torque arm from motor shaft centerline to scale pan attachment point gives the apparent motor torque. To determine the net torque, the tare is subtracted. This is the torque due to bearing friction as measured with a bare shaft of similar weight running in place of the impeller. However, this correction is very small. The fan airflow arrangement is in accordance with one of the Air Moving and Conditioning (AMCA) Standard Arrangements[1] (see figures 17, 18, and 19).

---

[1] AMCA Standard 210-67, *Test Code for Air Moving Devices.*

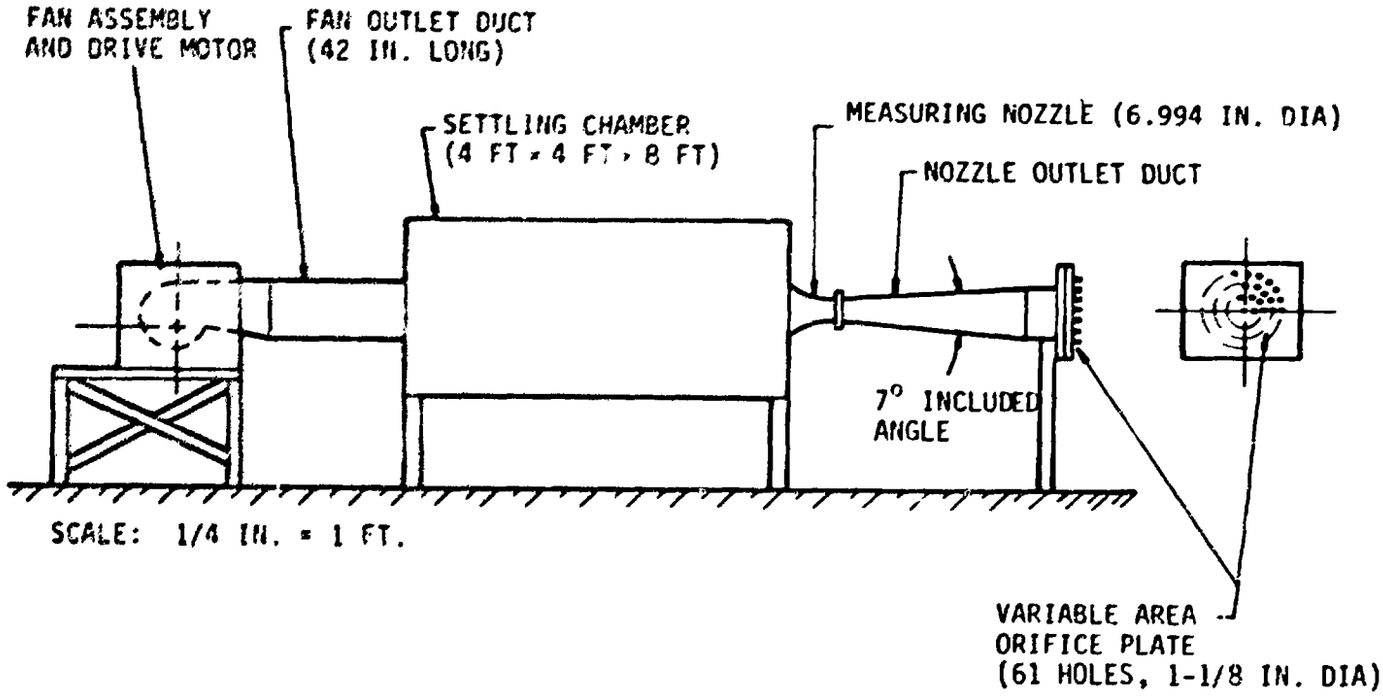

Figure 9 SKETCH OF OVERALL TEST SETUP FOR FAN PERFORMANCE TESTS

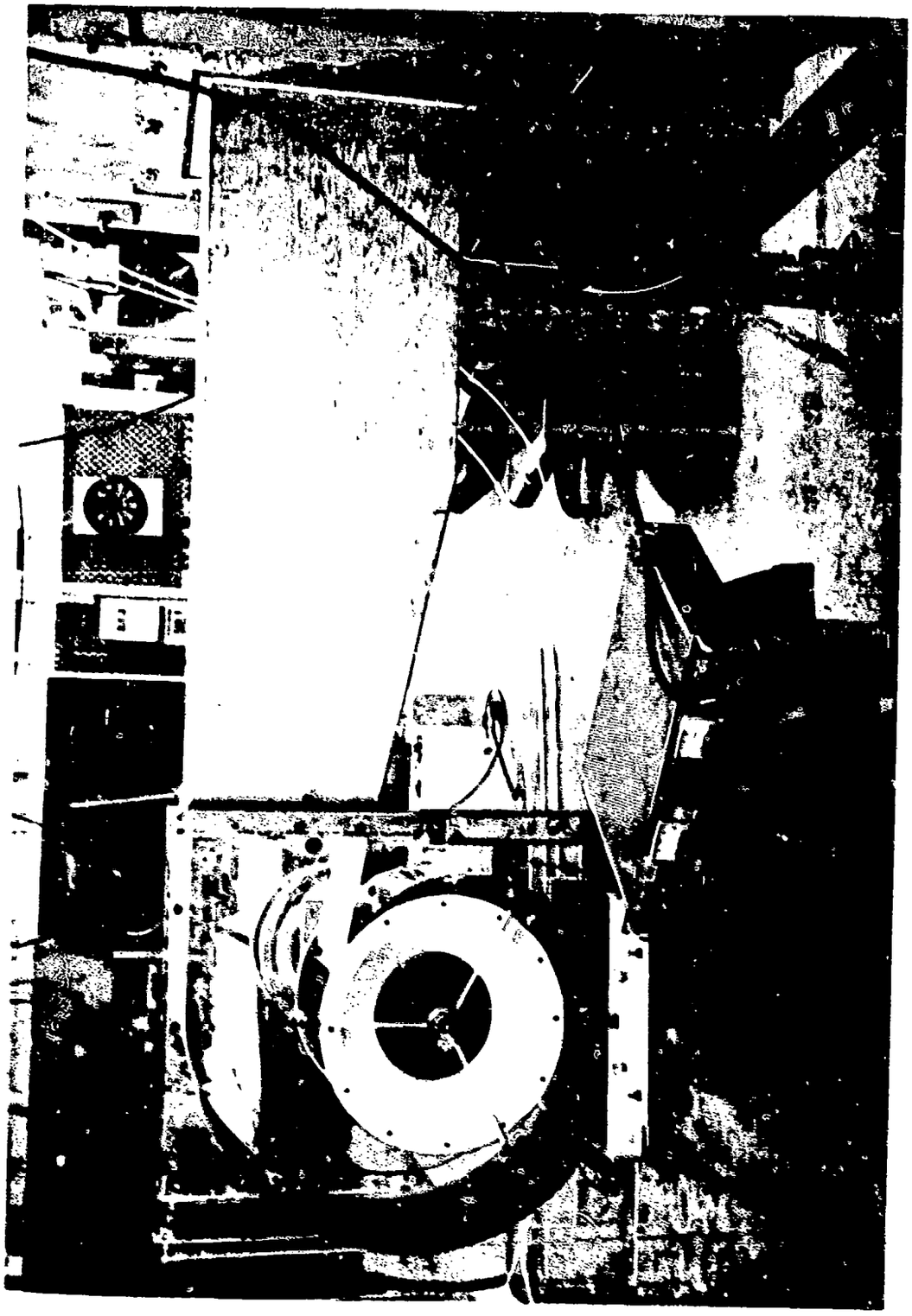

Figure 10 VOLUTE AND DIFFUSER ARRANGEMENT AS USED FOR CONFIGURATIONS 1 AND 2

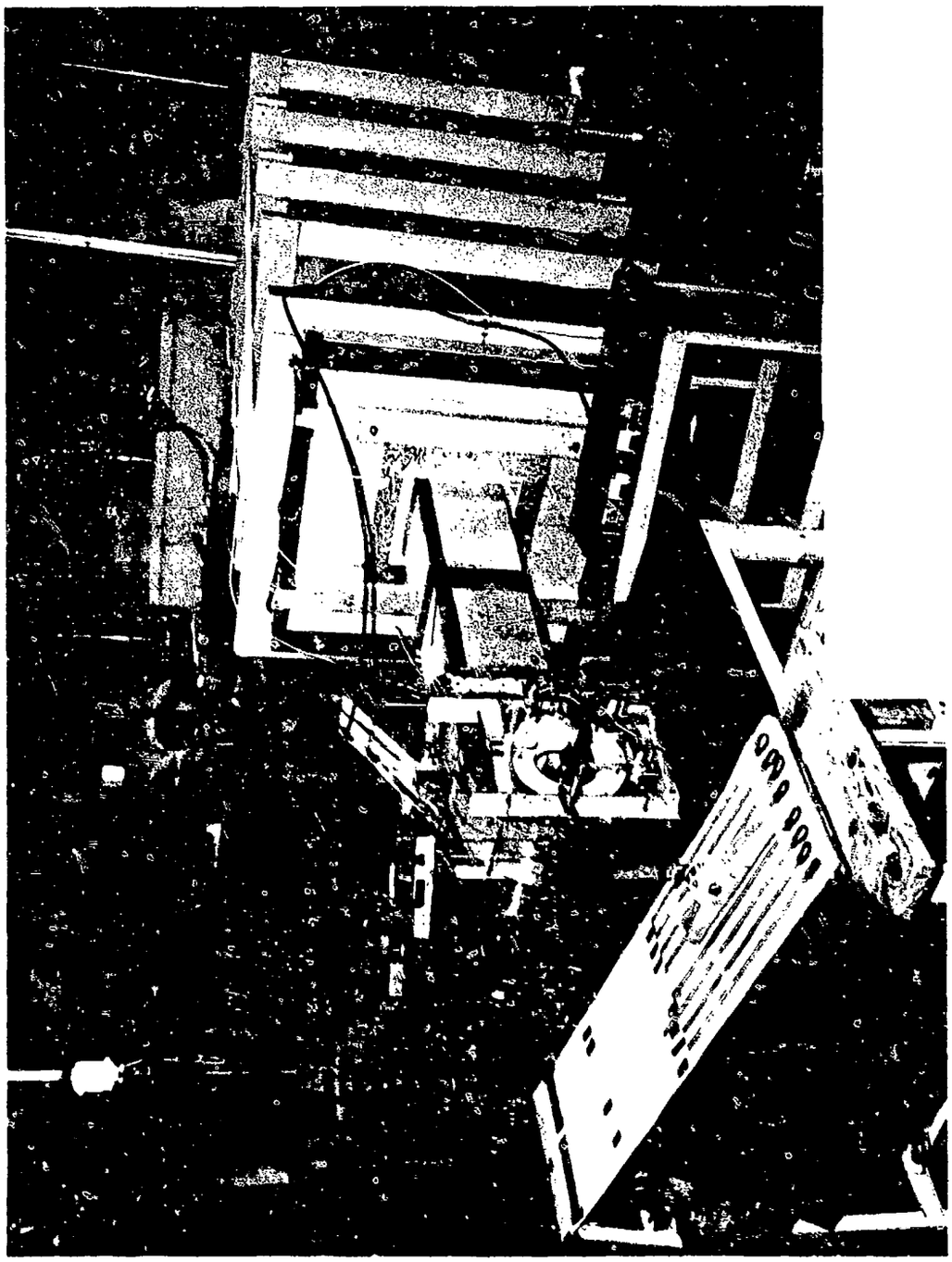

Figure 11 OVERALL TEST SETUP

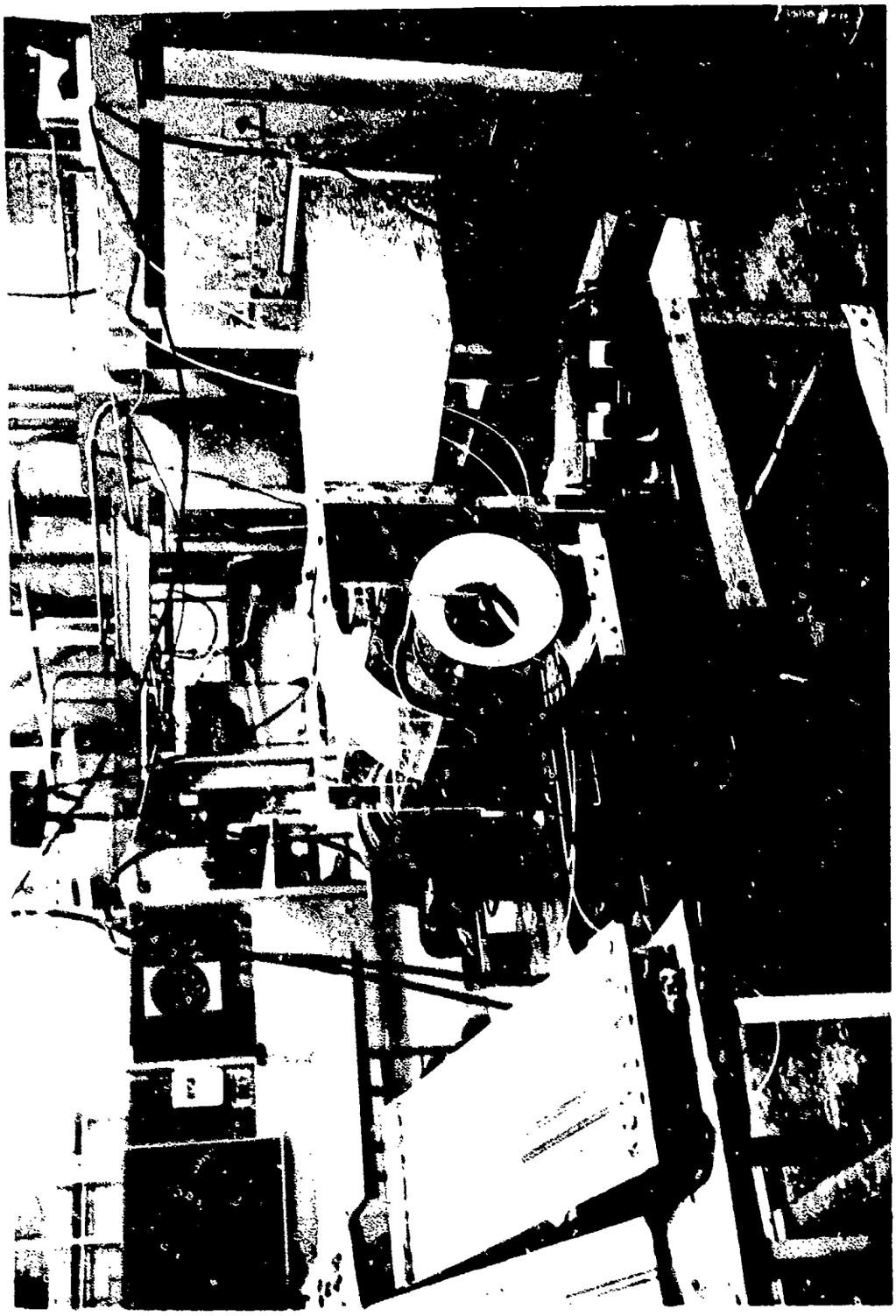

Figure 12 GENERAL VIEW OF TEST SETUP

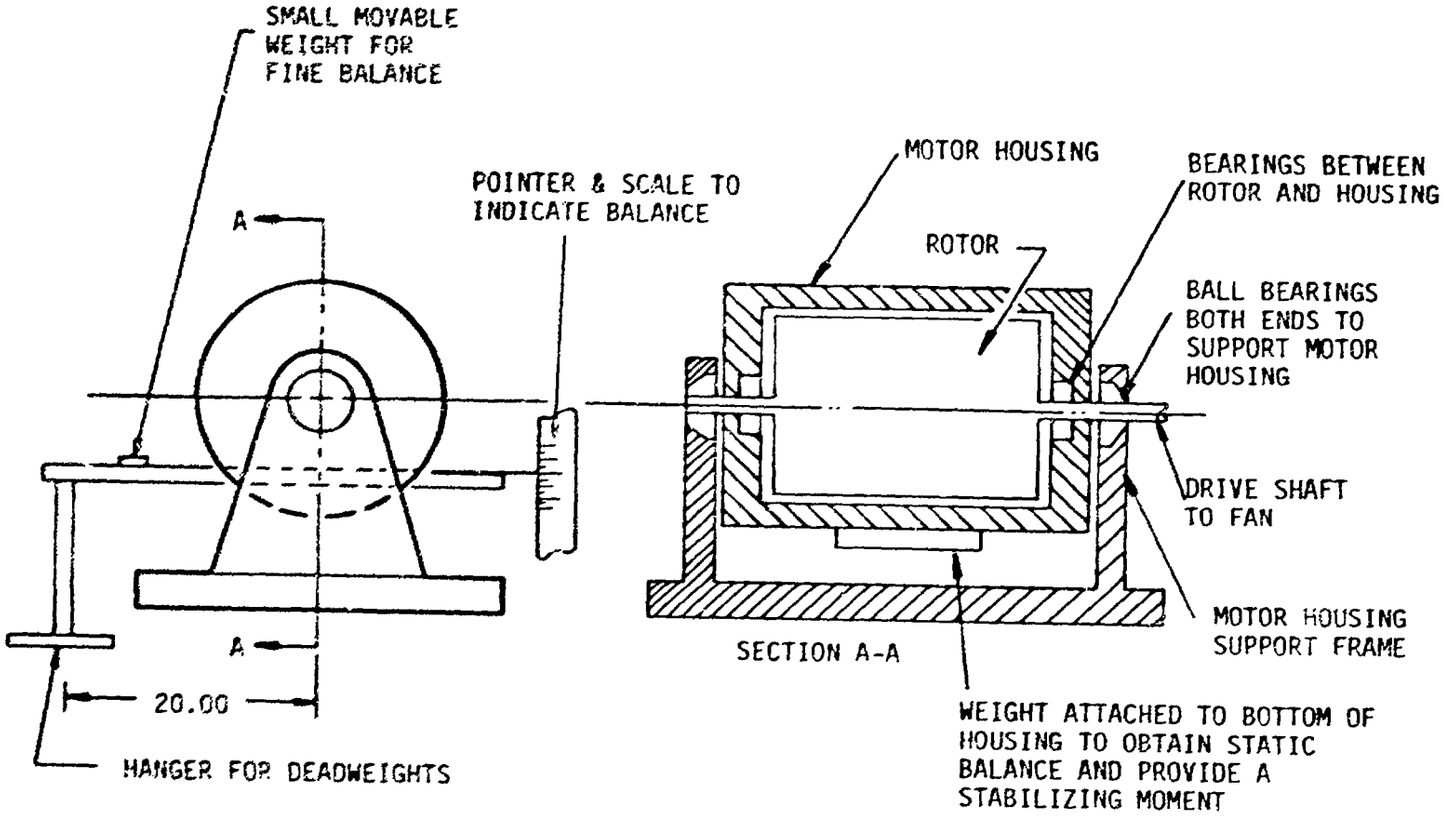

Figure 13 METHOD OF MEASURING INPUT TORQUE TO FAN ASSEMBLY

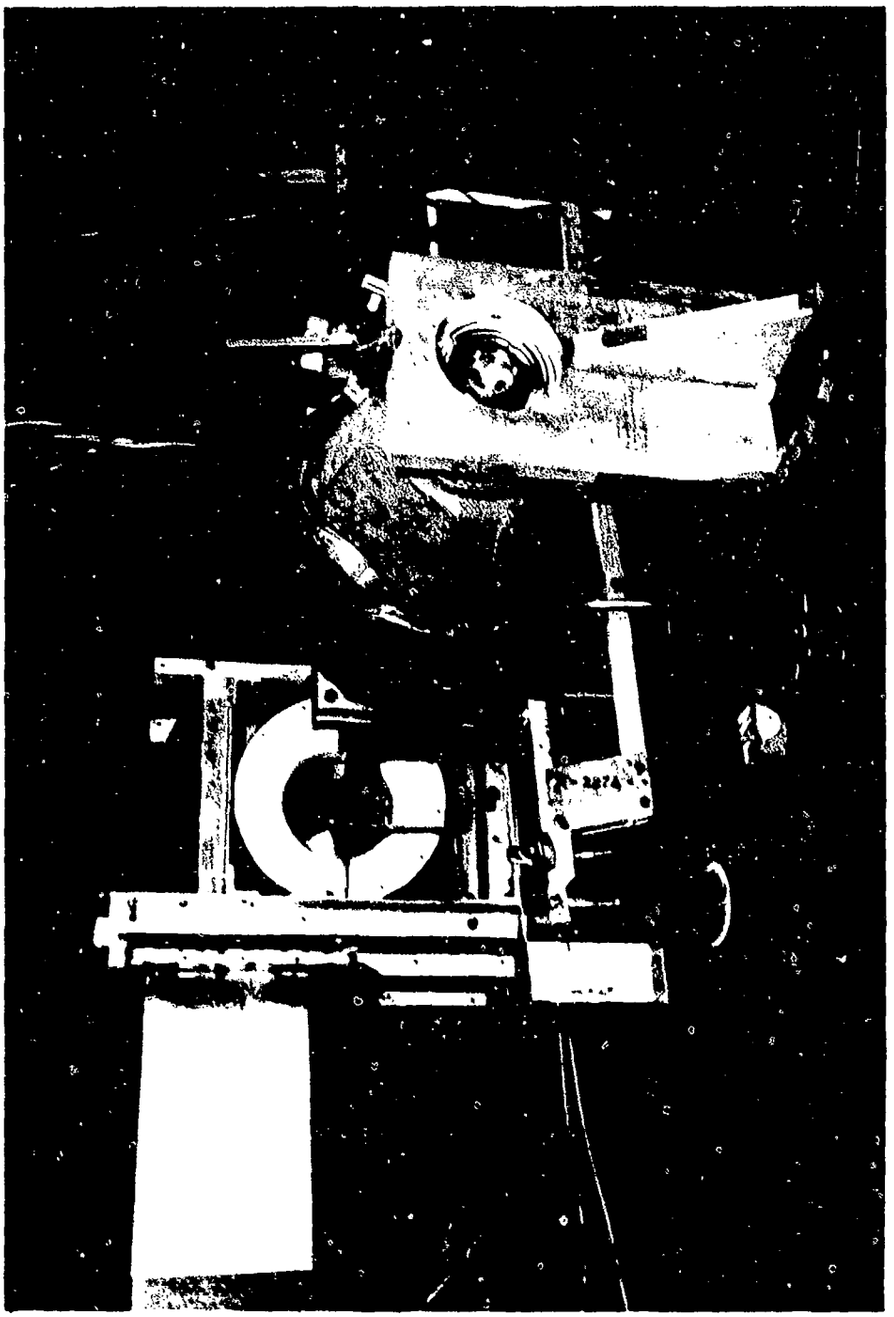

Figure 14 FAN DRIVE MOTOR ASSEMBLY

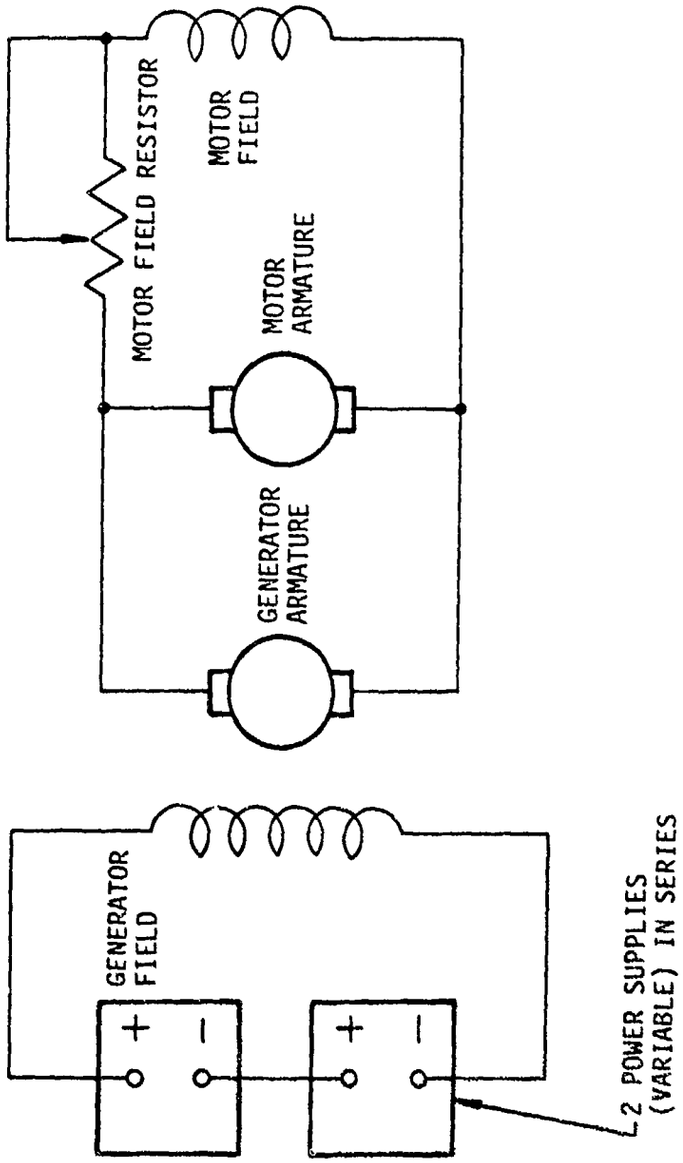

Figure 15 VARIABLE SPEED FAN DRIVE SYSTEM

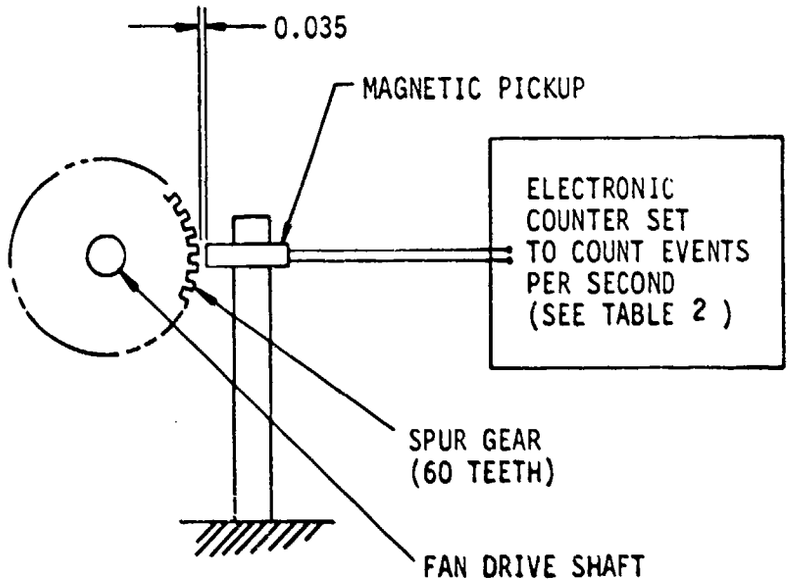

Figure 16 FAN SPEED MEASURING SYSTEM

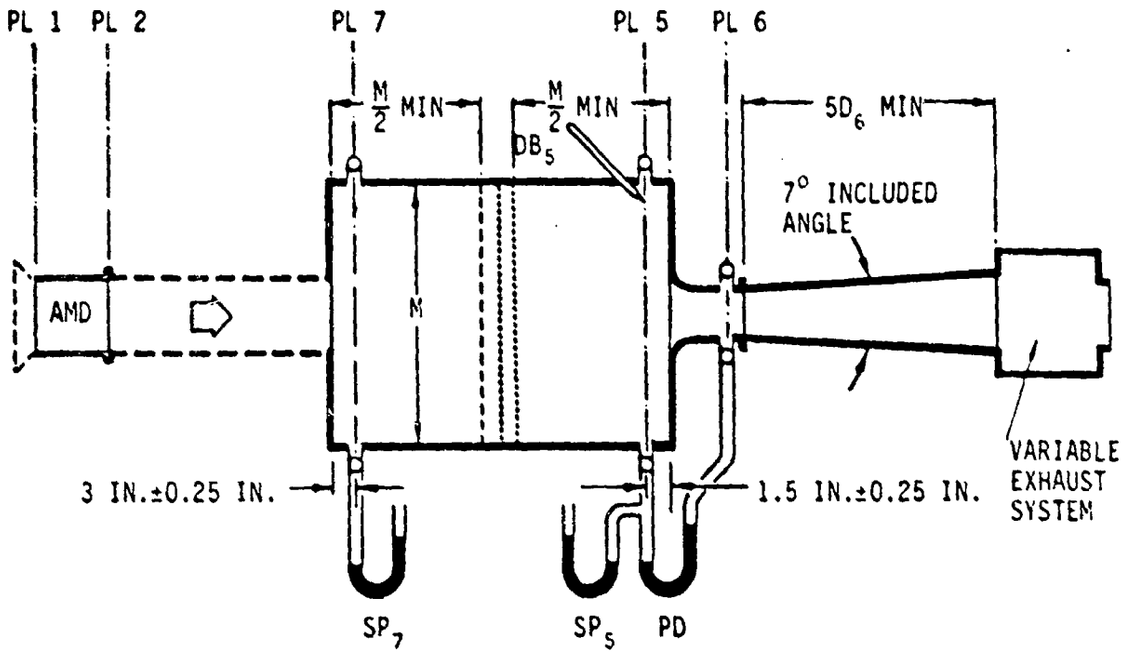

NOTES:

IN GENERAL TEST AREA, READ BP_a. READ DB_a AND WB_a IN PATH OF INFLOWING AIR.

AMD = AIR MOVING DEVICE (THE CENTRIFUGAL FAN)

SP_X = STATIC PRESSURE AMD

PD = PRESSURE DIFFERENTIAL ACROSS NOZZLE

BP = CORRECTED BAROMETRIC PRESSURE

DB_X = DRY-BULB TEMPERATURE OF AIR

WB = WET-BULB TEMPERATURE

D = DIAMETER

$M = \sqrt{\frac{4ab}{\pi}}$ WHERE a AND b ARE SIDES OF THE RECTANGULAR STILLING BOX

SUBSCRIPTS: a = AMBIENT; x = A SPECIFIC PLANE.

Figure 17 AMCA STANDARD FAN FLOW MEASUREMENT SETUP

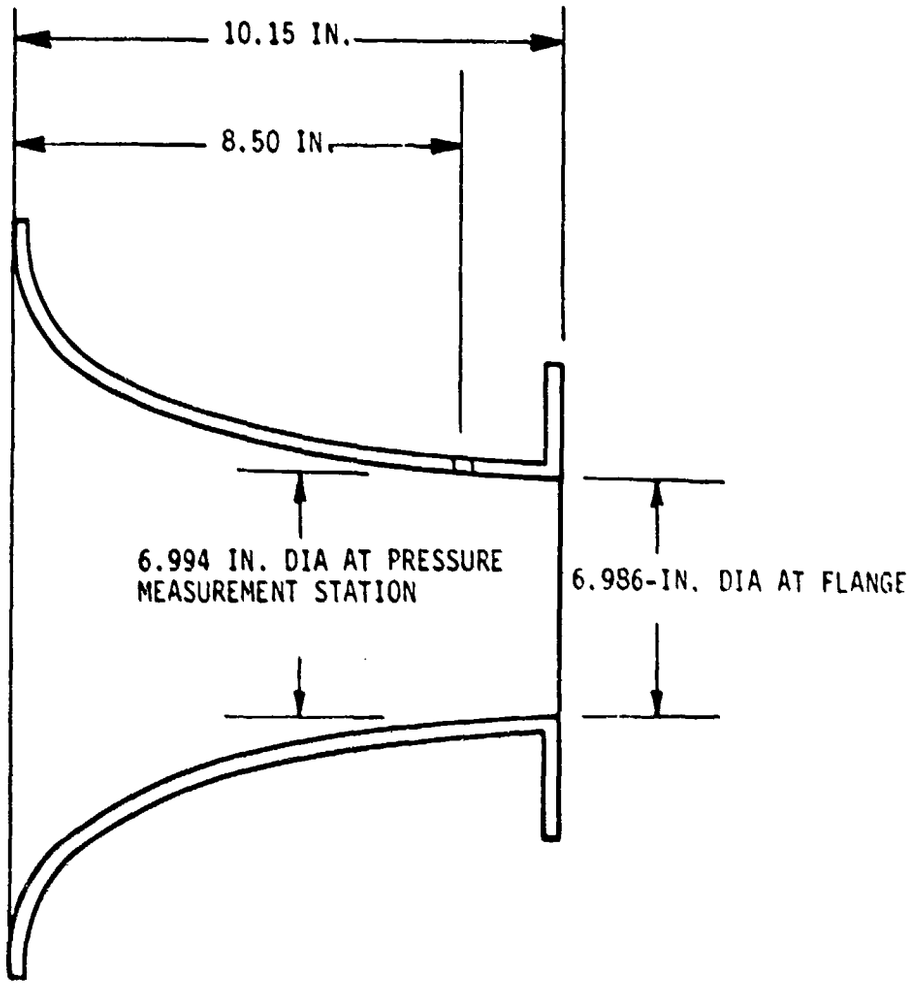

X (DISTANCE FROM BASE OF INLET)

X (IN)	D_X (IN)
5	6.997
6	6.997
7	6.998
8	6.995
9	6.989
10	6.986

Figure 18 VENTURINETER NOZZLE DETAILS

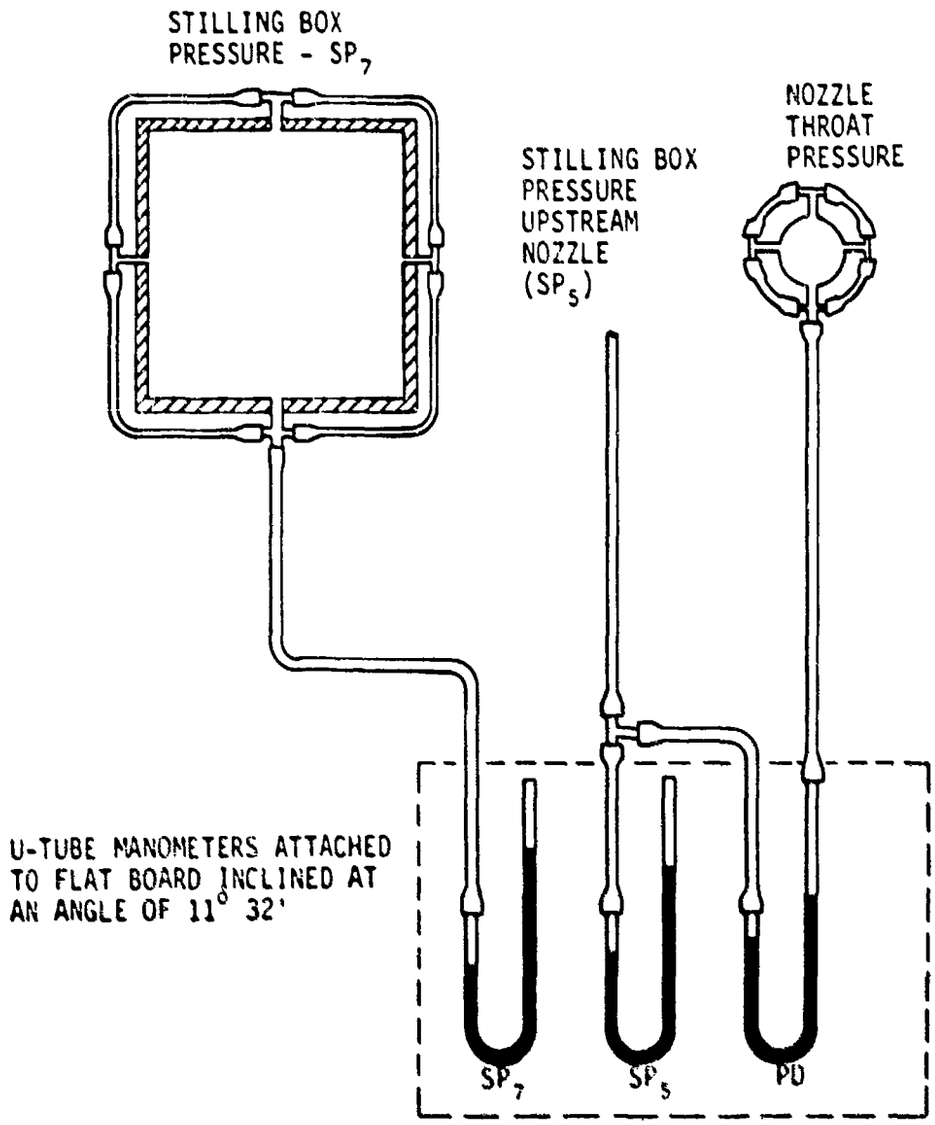

Figure 19 METHODS OF MEASURING PRESSURE

TABLE 2. LIST OF EQUIPMENT USED FOR 1/5-SCALE JEFF(B) IMPELLER TESTS

USE OR MEASUREMENT	TYPE EQUIPMENT OR INSTRUMENT	MANUFACTURER	MODEL OR TYPE	RANGE	ACCURACY
Pressure	Inclined U-Tube Manometer	Bell Aerospace Textron	-	0 to 9.0" H_2O (45" long) at 11 deg 32 min	±0.01" H_2O
Manometer Angle	M.C. Clinometer	Hilgen & Watts Ltd London, England	87792	0 to 90 deg	±5 min
Ambient Pressure	Barometer	Taylor	Unknown	28.10" to 31.0" Hg	±0.1" Hg
Ambient Temperature (Wet and Dry Bulb)	Sling Psychrometer	Taylor	Unknown	+20°F to +120°F	±1/2°F
Box and Duct Temperatures	Thermometer	Taylor	6311C	-30°F to 120°F, 1°F divisions	±1/2°F
Torque	Deadweight	Bell Aerospace Textron	-	0.01 lb	+0.0003 lb +0.0008 lb
				0.05 lb	±0.0001 lb
				0.25 lb	±0.001 lb
				0.50 lb	±0.001 lb
				2.00 lb	±0.001 lb
Fan Speed	Electronic Counter	Hewlett-Packard	5214L	-	1 count $1/10^5$ sec
Fan Speed	Magnetic Pickup	Red Lion Controls	MP-7500 10860	-	-
Fan Drive	Motor Generator	Bill Jack Industries	-	2000 VA 400 Hz	-
Fan Drive	Generator	Louis Allis	-	2.5 to 5.0 kVA 3 phase 200 to 400 Hz max 100 to 200 volts	-
Fan Drive	Generator Drive	Louis Allis	-	7.5 hp, 460 volts 3 phase, 60 Hz, 1500 rpm	-
Impeller Discharge P_T, P_S, and Angle	Pitot-Static Probe	United Sensor	PAC-12-KL 0.120" Dia	-	-

The fan draws air directly from the laboratory, which is a very large building, and discharges it through a short, rectangular duct into a large settling chamber containing screens. The air leaves the settling chamber through a standard venturimeter nozzle (figure 18), which discharges into a short, circular duct. At the end of the duct is a cork plate. This is an aluminum plate pierced by closely spaced holes. The flow resistance can be varied by changing the number of corks in the plate according to a prearranged set of patterns so that the uniformity of flow in the duct is changed as little as possible. This precaution minimizes the risk of secondary effects on the flow measurement device due to changes of flow pattern in the system. The pressure measurement arrangements are shown diagrammatically in figure 19.

The settling chamber pressure, the pressure upstream of the venturimeter nozzle, and the venturimeter differential pressure are all shown by inclined water manometers arranged to give a magnification factor of 5.0. Note that the inclination of the manometer is checked for each test with an inclinometer, and the angle is input along with the other data to the computer program which calculates the performance of the fan.

Barometric pressure is measured before and after each test, and the wet and dry bulb room temperature is recorded for each test point. Also, the air temperature in the settling chamber and upstream from the nozzle is measured for each test point by high-grade mercury in glass thermometers. Typically, these temperatures vary only slightly during the test; however, each individual value is used for the calculation of its corresponding test point.

Usually, 11 test points are recorded for each fan speed. However, if an unusual feature shows up on the fan characteristic, additional points are run in that region of the pressure-flow curve to define the shape of the curve more exactly.

It is customary to run three or four well-spaced fan speeds for each test. This illustrates Reynolds number of dependence and serves as a check in case a bad reading results in an anomalous point.

The test equipment used and the accuracies for each measurement are shown in table 2.

VELOCITY AND PRESSURE SURVEYS

Velocity and pressure surveys were performed for three volute configurations: the final Bell compact volute (Configuration 3), the log spiral volute (Configuration 4), and the JFFF(A) volute (Configuration 5).

Volute discharge section surveys were carried out for all three of these cases, and the diffuser exit plane for the JEFF(A) was also surveyed. The method used was to divide the vertical and horizontal dimensions into an

appropriate number of lengths to provide 35 to 45 intersection points. Small holes were drilled in the vertical side of the duct at the volute exit plane or the diffuser exit plane, as appropriate, and a pitot-static probe with a scale marked on the stem was fed through each hole in turn, while the other holes were temporarily sealed. The probe was aligned to the flow direction, and maintained perpendicular to the plane containing the impeller disk. Readings of static pressure and differential pressure were recorded for each station across the section. The probe was then moved to the next hole located vertically below, and the procedure was repeated. In this way, the entire section was mapped, which enabled contours of equal velocity and/or pressure to be constructed for two or three fan operating points.

In addition to these volute and diffuser exit plane surveys, surveys were made of the inlet bellmouth, both axial and radial (at the throat). Surveys of the flow velocity (speed and direction) at the blade leading edge and trailing edge radii were conducted for the three principal configurations for two or more fan operating points. For these surveys, a wedge-type probe was used identical to that shown in figures 20 and 21. This is the same probe used by Aerojet Liquid Rocket Co. (ALRC) for the JEFF(A) fan blade exit surveys. In each case, the probe was inserted through a small hole drilled in the side of the volute. The probe carried a circular scale so that the flow angle could be observed when the wedge was aligned to the flow. This condition occurs when the pressure readings from the two sides of the wedge are equal. A scale on the stem of the probe enabled the distance along the blade edge, at which the measurements were being taken, to be determined.

The manometer connections for the probe are shown in figure 22 and figure 23, a photograph taken from a previous test, shows the probe in use to measure impeller blade discharge velocity and flow angle. Figure 24 shows diagrammatically how the probe was used to determine flow angle. Figure 25 shows the location of the pressure measurement points in the inlet bellmouth, figure 26 shows the location of the preliminary inlet bellmouth swirl measurement point, and figure 27 shows the locations of the measurements used for the impeller blade inlet and discharge surveys.

Several other types of surveys were made using hand-held pitot-static or static pressure probes. These included exploration of the volute internal pressure distribution, particularly in the region of the bellmouth/impeller interface, and exploration of pressure distribution external to and inside the bellmouth. These tests were qualitative only to the extent that exact probe tip coordinates were not available.

COMMENTS ON THE CHOICE OF FAN SPEEDS USED

To minimize the corrections required for compressibility and Reynolds number differences, it was desired to run the model fan impeller at as high a proportion of the full-scale tip speed as possible.

FIGURE 7

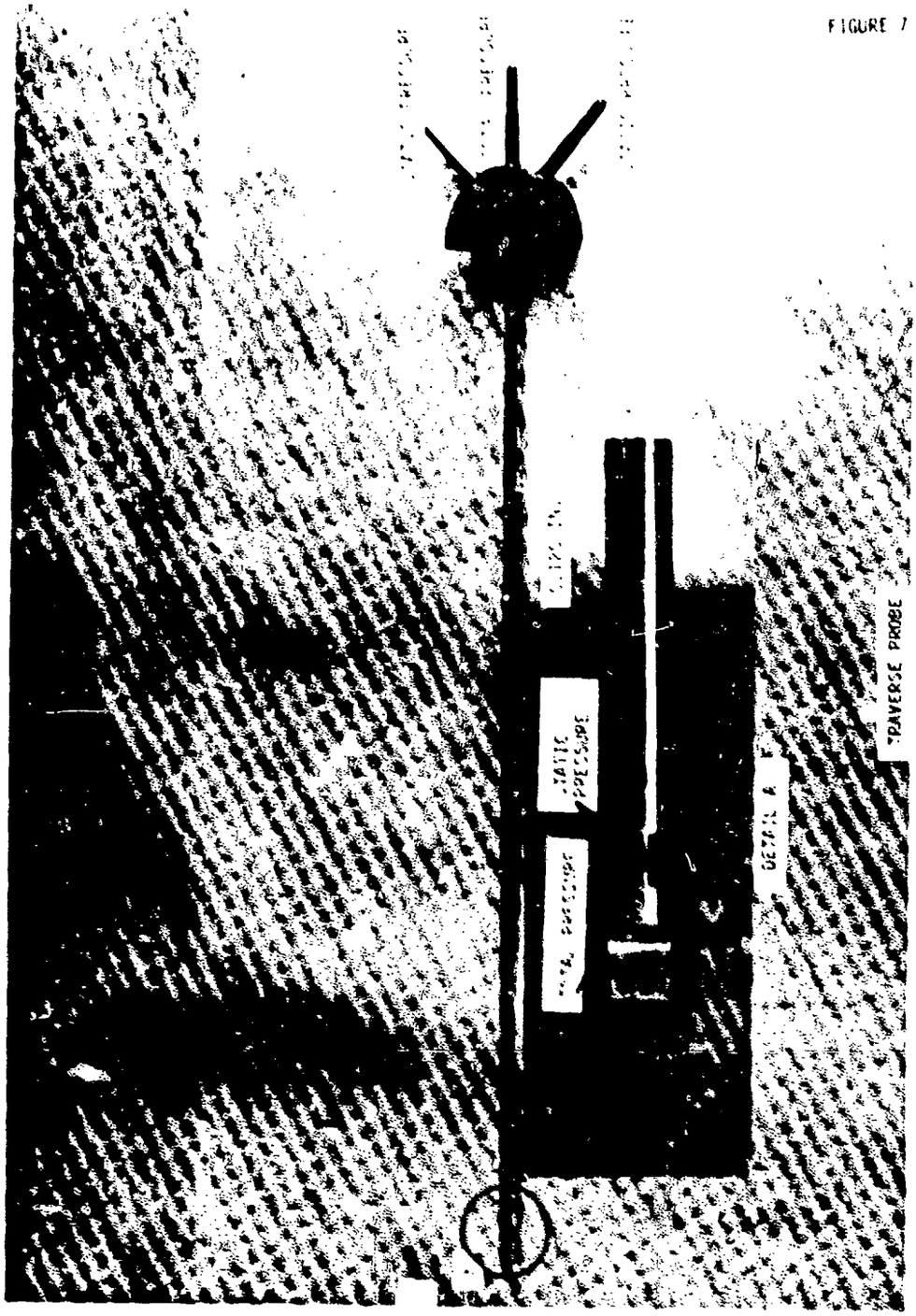

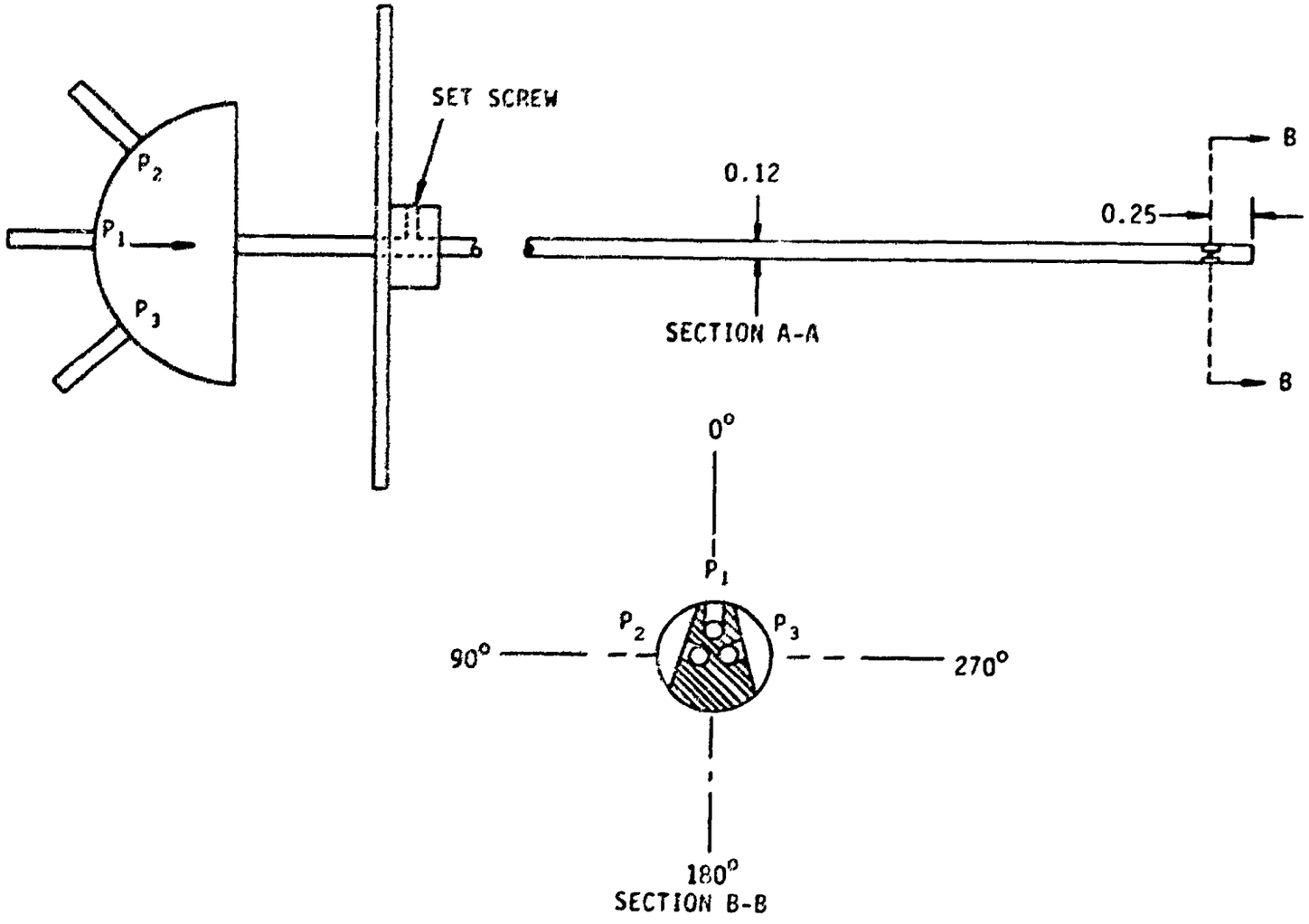

Figure 21 WEDGE TRAVERSE PROBE (DIAGRAM)

Bell Aerospace TEXTRON
Division of Textron Inc

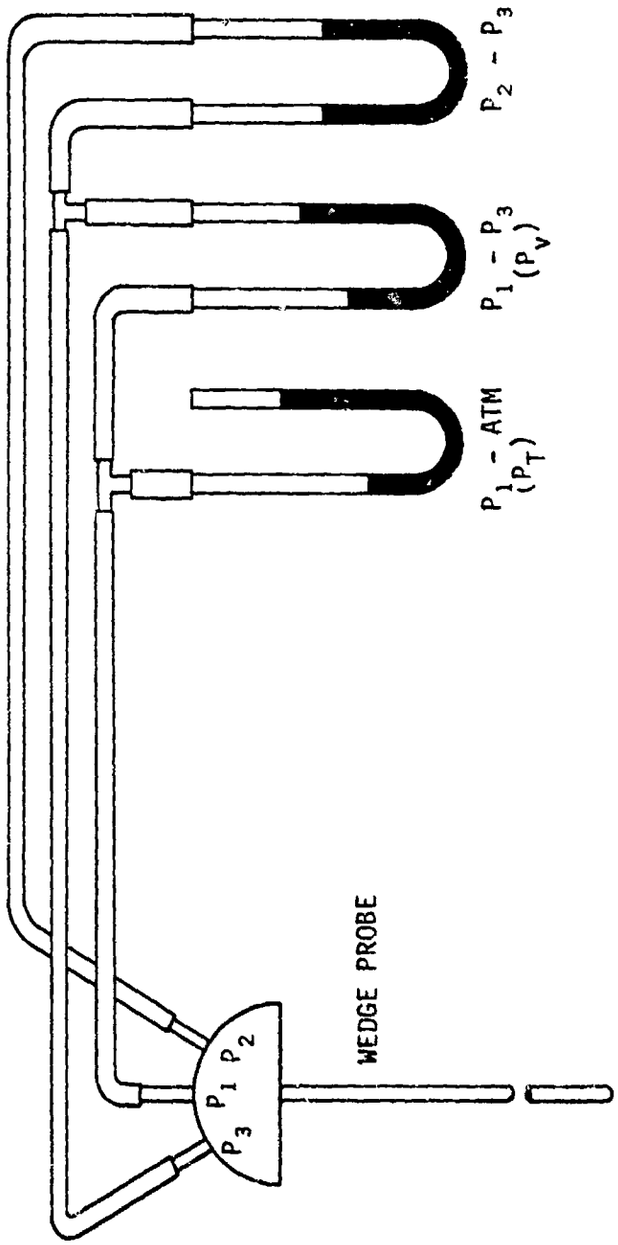

Figure 22 WEDGE TRAVERSE PROBE PRESSURE CONNECTIONS

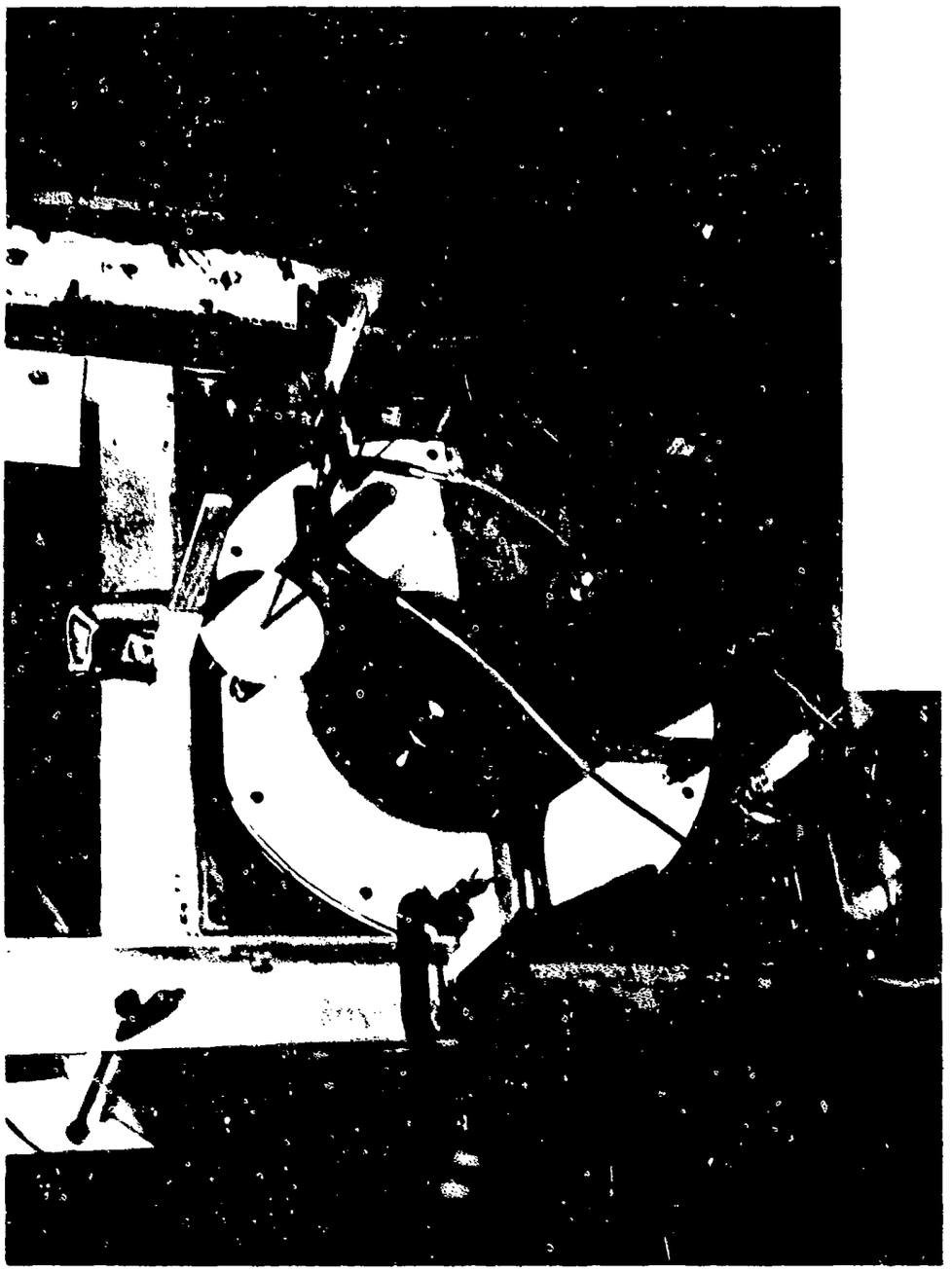

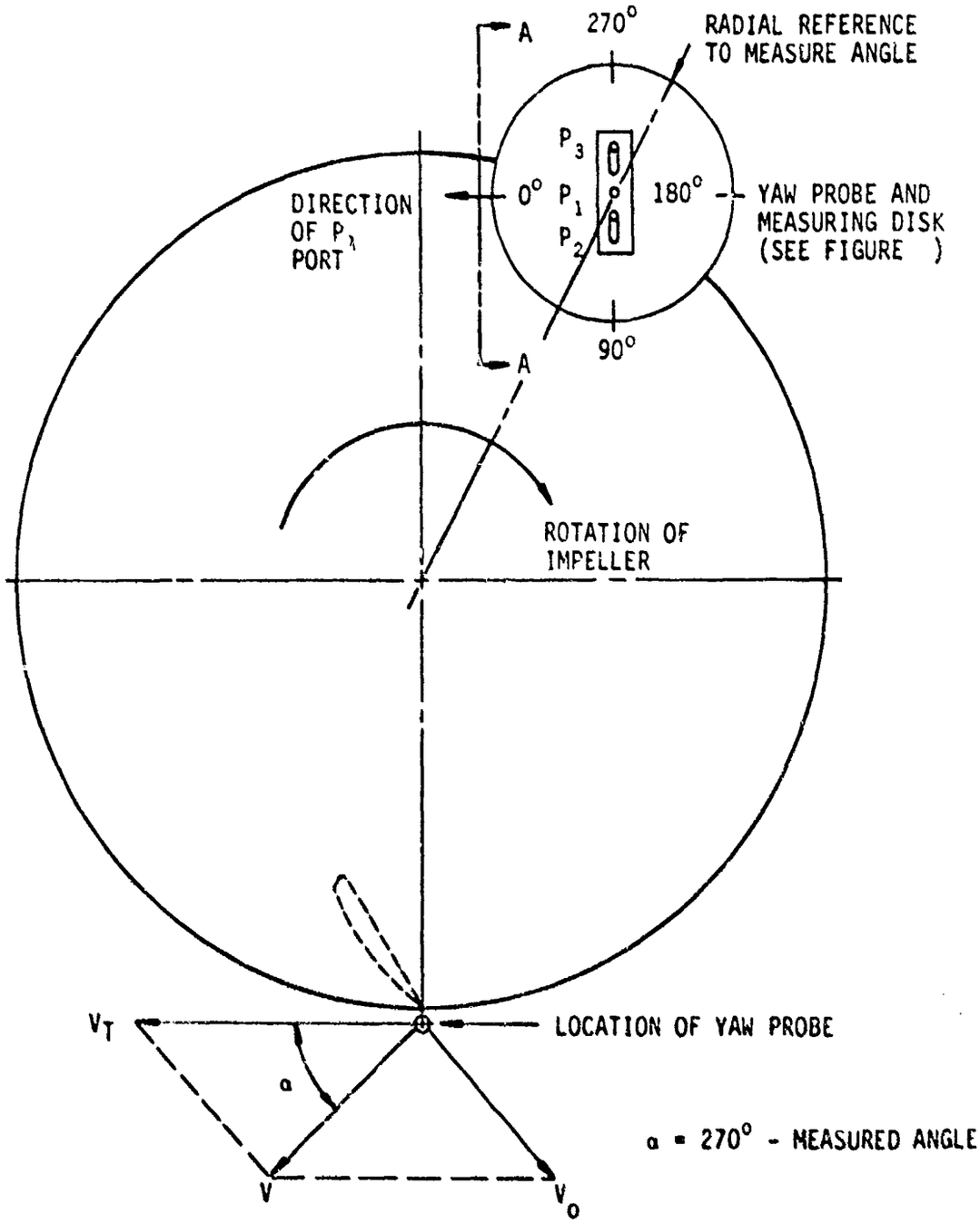

Figure 24 METHOD OF MEASURING ANGLE OF AIR DISCHARGE FROM IMPELLER (SKETCH)

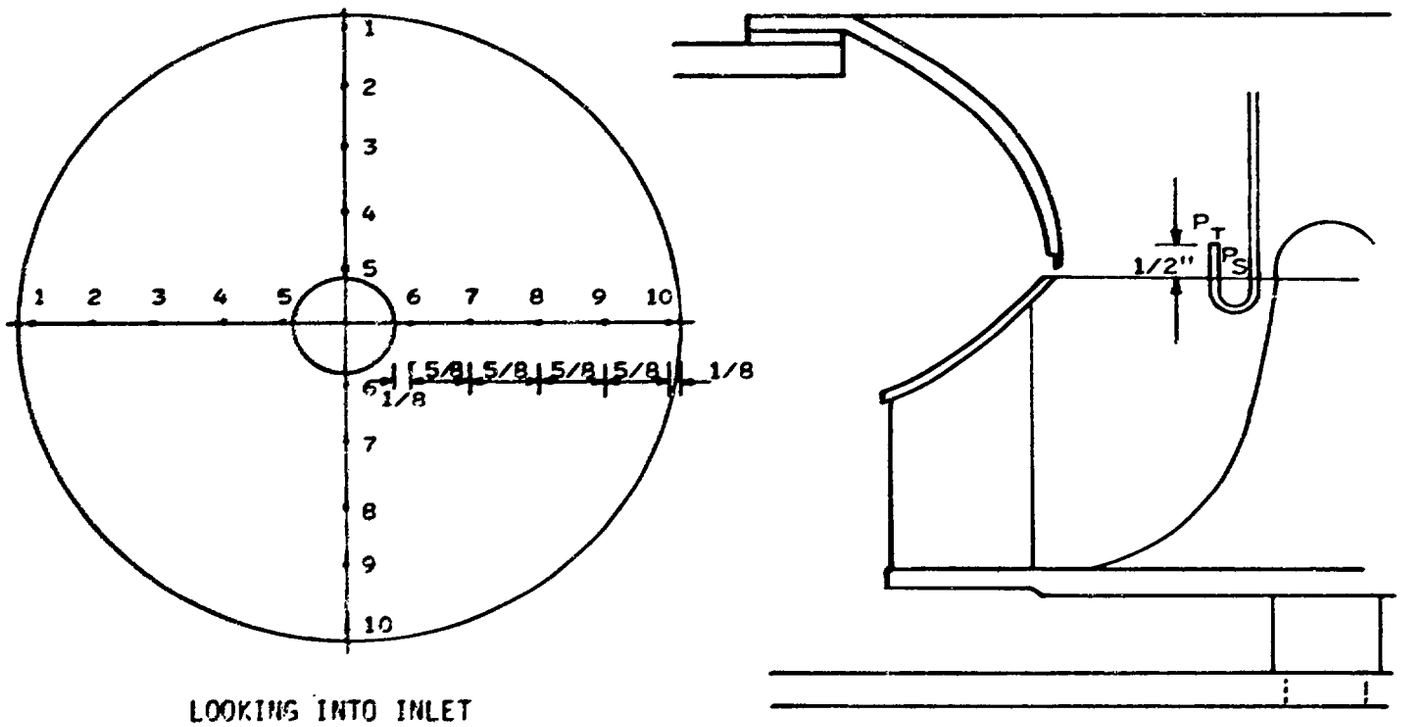

Figure 25 INLET BELLMOUTH PRESSURE MEASUREMENT LOCATIONS

Bell Aerospace TEXTRON
Division of Textron Inc

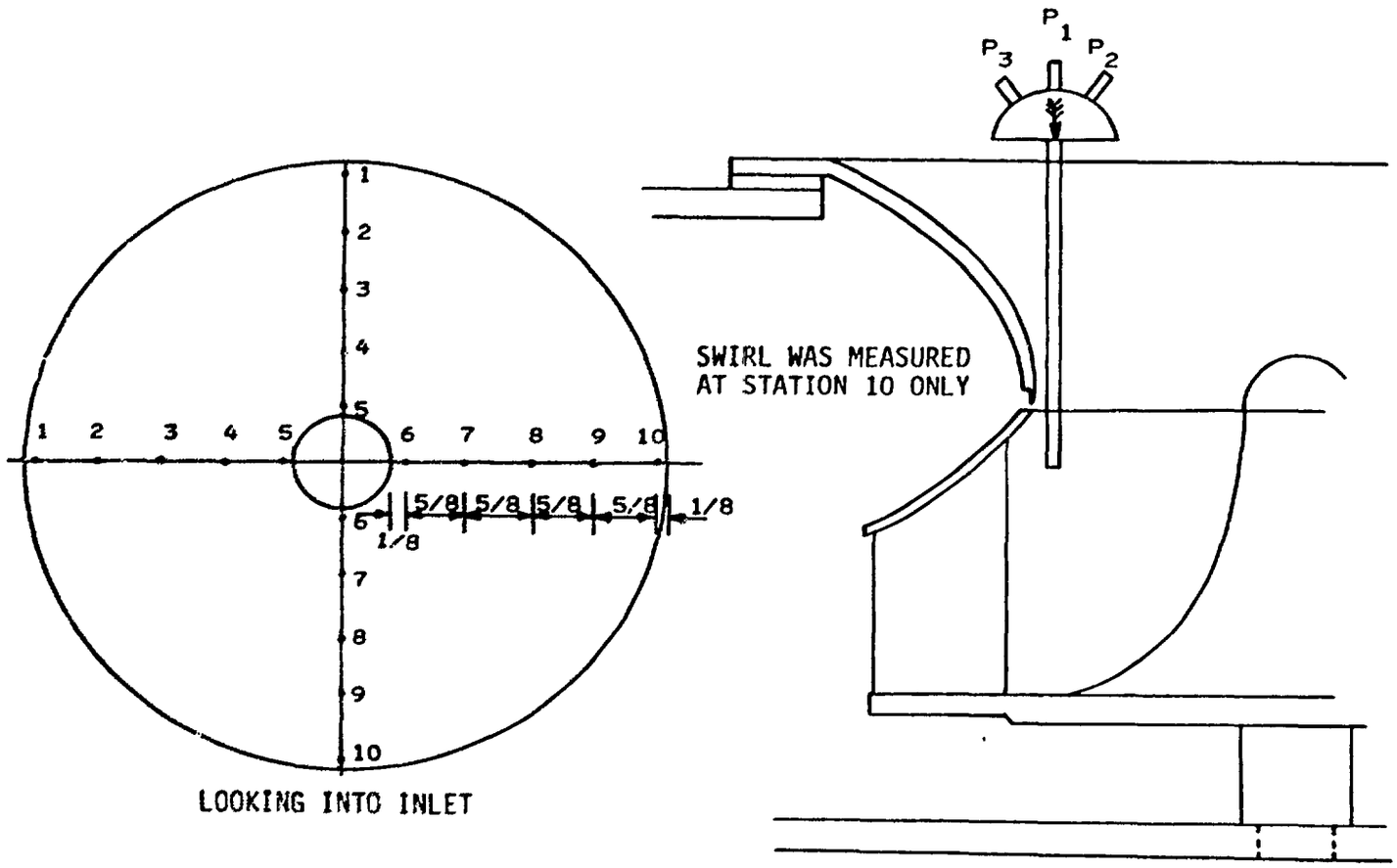

Figure 26 INLET BELLMOUTH SWIRL MEASUREMENT LOCATIONS

Bell Aerospace TEXTRON
Division of Textron Inc

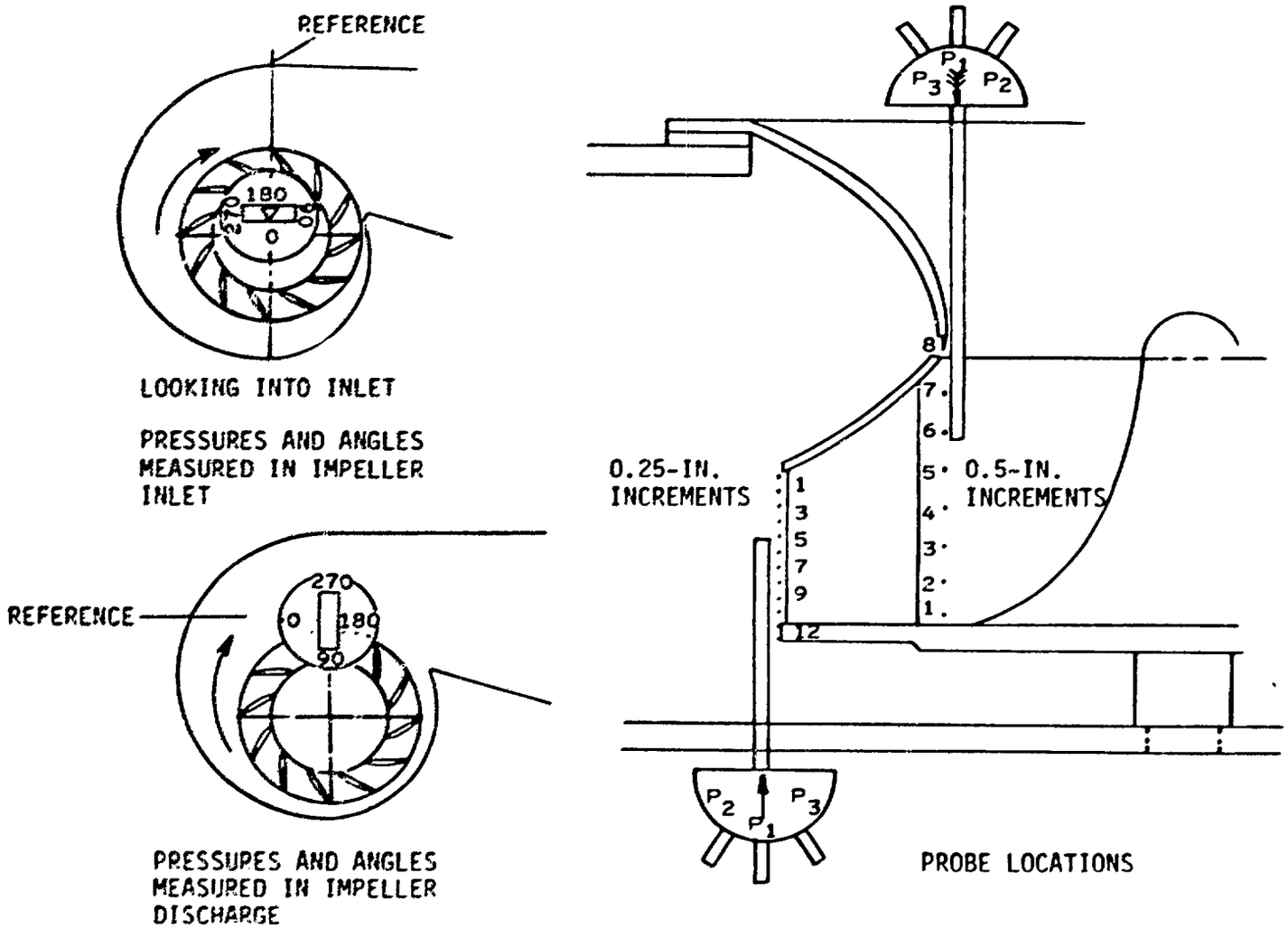

Figure 27 IMPELLER BLADE INLET AND DISCHARGE SURVEY LOCATIONS

Bell Aerospace TEXTRON
Division of Textron Inc

Based on the original Bell proposal performance predictions, a full-scale 49.5-inch-diameter impeller for the JEFF(A) would need to be capable of operating at speeds up to about 2280 rpm to meet the maximum pressure and flow requirements at 100°F. The corresponding tip speed is 492 ft/s. Accordingly, a 12-inch-diameter model fan impeller would need to run at 9405 rpm to give the same tip speed. Unfortunately, this is not possible since centrifugal stress increases inversely with the diameter for a given tip speed. Thus, the model would have a centrifugal stress of more than four times that of the full-scale fans.

It was decided to try to obtain half the full-scale tip speed since this was a goal which could possibly be attained.

Two additional factors were present which influenced the choice of speed. First, it was desired to keep the cost of the model impeller as low as possible, and second, it was desired to use an existing test rig (to save cost) which had previously been used for 12-inch-diameter model fan impellers running at about 3000 rpm.

The model impeller was designed to be used at speeds up to about 4700 rpm (half of full-scale tip speed). In the event, it was the test rig itself which limited the maximum speed used.

It was found that the nondimensional characteristics ceased to improve with fan speed (proportional to Reynolds number), as expected. This was found to be due to small deflections of the volute walls which caused the clearance gap between the impeller and the bellmouth to increase. The additional clearance caused a reduction of performance, as discussed later. This problem was cured by tying the volute walls with a wire tension member. Before tightening the tension member, it was demonstrated that no detectable performance degradation resulted from its presence. Upon tightening the tension member, the bellmouth/impeller clearance remained constant under pressure, and many tests were run satisfactorily at 4000 rpm. Unfortunately, at speeds of 4000 rpm and above, the test rig plenum, previously used successfully with pressures corresponding to 3000 rpm, developed several small leaks which proved impossible to eliminate entirely. This explains why the nondimensional characteristics did not continue to improve with speed above 3500 rpm. It was decided, therefore, to limit the fan speed to 4000 rpm, which is 85 percent of the goal of 4700 rpm. Since there was no signficant difference in performance between 3000 rpm and 4000 rpm, most of the pressure and velocity surveys were performed at 3000 rpm to facilitate testing and conserve the life of the rig.

3. GENERAL DESCRIPTION OF FAN CONFIGURATIONS TESTED

In all, five fan configurations were tested. These are summarized in table 3 and are briefly described below.

Initially, the model impeller was installed in a volute shape which had proved satisfactory for an experimental double-width 12-inch-diameter fan. Naturally, the volute width and one sideplate had to be changed to suit a single-width impeller. Based on previous experience, a volute width between 8.375 and 9.0 inches was expected to give the desired result, and it was decided to try 8.375 inches first. Preliminary performance test results for Configuration 1 indicated a need for the wider volute and a more generous cutoff radius. Accordingly, the volute was modified to Configuration 2, which had a volute 9 inches wide, an increased cutoff clearance of 1.25 inches, and a radius of 5/16 inch. Configuration 2 showed considerable improvement, but the flow at the design point was still somewhat below the predicted value. The cutoff was again modified, retaining the same radius and volute width, but increasing the impeller clearance to 1.75 inches. This time the predicted performance was obtained almost exactly over most of the characteristic, particularly around the design point. The modified volute was designated Configuration 3, and became the chosen Bell compact volute design for which numerous performance tests and pressure and velocity surveys were performed.

Upon completion of testing Configuration 3, the test rig was dismantled and reassembled with a log spiral volute shape. Good results had previously been obtained with this impeller geometry and with log spiral volute segments in a double-width double-discharge arrangement which eventually became the JEFF(B) fan configuration. In the case of the single-discharge volute, the results proved disappointing. Because the spiral angle of 10.9 degrees, which should give excellent performance once the other geometric parameters have been optimized, resulted in a volute discharge height too great for practical application, it was decided not to pursue this configuration. After performance data at speeds up to 4000 rpm had been obtained and exit surveys had been made, the rig was once more dismantled to install the JEFF(A) configuration which had been previously fabricated in preparation, complete with transition duct or diffuser. Tests with the JEFF(A) configuration, which is fully described in section 5, proceeded directly, since all minor difficulties with the test procedure and data handling had been eliminated during testing of the four Bell configurations described in greater detail in section 4.

All the configurations tested used the same inlet bellmouth geometry, shown in figure 28. This bellmouth design has been shown to be satisfactory in many previous tests. The correct impeller penetration was maintained for the various configurations by the use of appropriate thicknesses of annular shims beneath the bellmouth attachment flange.

TABLE 3. SUMMARY OF CONFIGURATIONS AND CONDITIONS TESTED

CONFIGURATION	TYPE	PERFORMANCE TEST SPEEDS (RPM)	SURVEYS AND SPECIAL TESTS
1	Bell Compact (1)	2500, 3000, 3500	Bellmouth position tests
2	Bell Compact (2)	2500, 3000, 3500, 4000	None
3*	Bell Compact (3)	2500, 3000, 3500, 4000	Volute exit, inlet, blade surveys, etc
4	Bell Log Spiral	2500, 3000, 3500, 4000	Volute exit and blade surveys
5*	ALRC JEFF(A)	2500, 3000, 3500, 4000	Volute exit, diffuser exit, inlet, blade surveys

*Selected for full-scale performance predictions

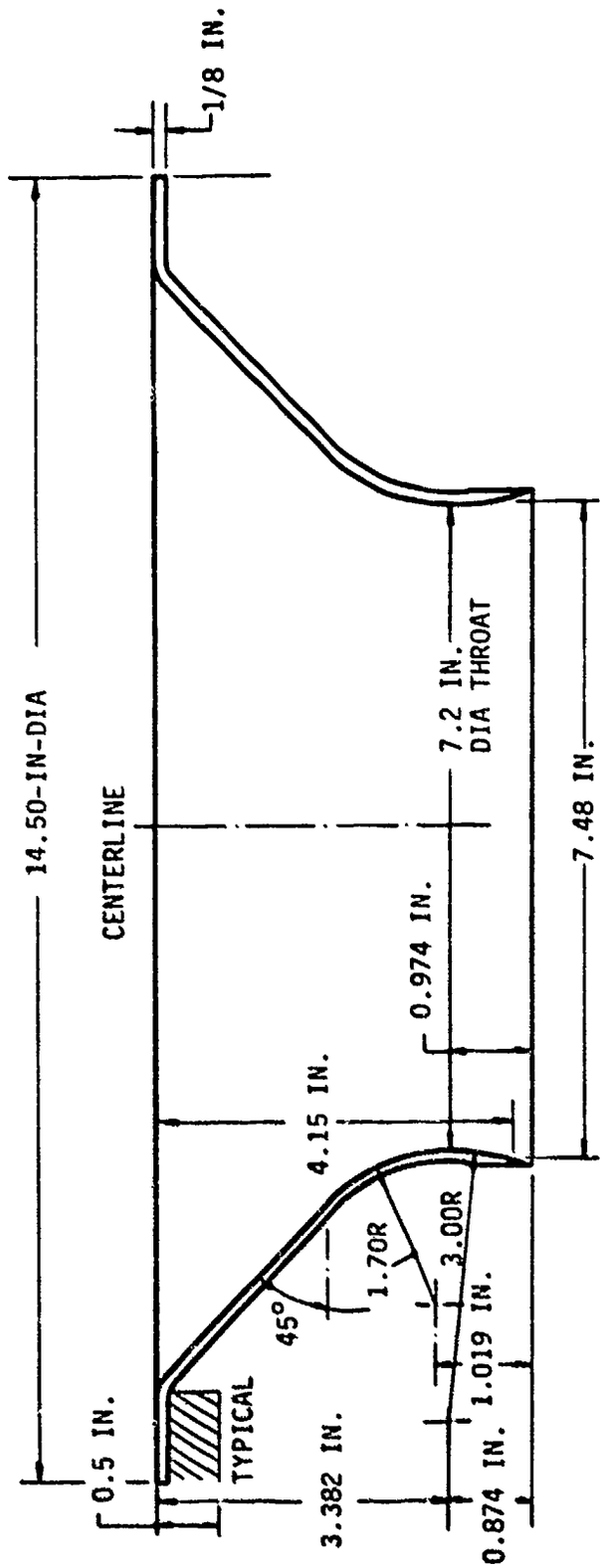

Figure 28 INLET BELLMOUTH DETAILS

4. BELL VOLUTE CONFIGURATIONS, DESCRIPTION AND TEST RESULTS

CONFIGURATIONS 1 AND 2

Configuration 1, which employed an existing volute shape successfully used in previous experimental fan work, is shown in figures 29 and 30. The polar coordinates for the complete spiral are given in table 4. The cutoff lip, which was of airfoil form for the purpose of reducing noise, was situated at the 22-degree position shown in figure 29. Theoretically, this resulted in a radial impeller clearance of 0 550 inch. In practice, due to the finite width of the slot and the fact that the shaped end of the scroll was necessarily not totally constrained by the slot geometry, the measured clearance was a little larger - as nearly as could be determined, 5/8 inch. Three positions of the inlet bellmouth were tested. These positions are shown in figures 31, 32, and 33.

The volute width was computed for a single-width fan, based on the backplate clearance required and the range of volute volume ratio believed necessary to obtain the predicted performance. The minimum width necessary was thought to be 8.375 inches, and the maximum width required was not expected to exceed 9.0 inches. After assembly of the volute in Configuration 1, measurements indicated a width of 8.41 inches, and this value was used in subsequent data analysis. However, the results (figures 34 through 38, and tables 5 through 7) showed a need for a more generous volute width and cutoff radius. The volute width was increased to 9.0 inches (measured after assembly), and the cutoff radius was increased to 5/16 inch. At the same time, the angle at which the cutoff was located was increased from 22 to 44 degrees, although the 2:1 ratio was purely fortuitous, arising from the effort to increase the radial clearance between the impeller and the cutoff to about 1.25 inch. These details are shown in figures 39 and 40. The results of performance tests with Configuration 2 are presented in figures 41 through 45 and tables 8 through 11. Comparing the performance of Configurations 1 and 2, it can be seen that there is a considerable improvement, but that the design point goal has not yet been reached. Accordingly, the cutoff angle was increased to 70 degrees in order to give a radial clearance of about 1.75 inches at the cutoff (see figures 46 and 47). Figure 48 shows the inlet bellmouth location. This time the design point predicted performance was attained, and no further modifications were made. The performance is shown in figures 49 through 52 and tables 12 through 14.

In Configurations 1 and 2, the original diffuser length was maintained, followed by a short length of straight rectangular duct to the box (plenum) entrance. In Configuration 3, as a matter of convenience, the diffuser was run all the way to the box entrance (figure 47) due to the increased height of the duct at the volute discharge. Based on previous experience, it was thought that there would be very little, if any, difference due to the absence of the small change in angle of the diffuser floor. In all cases, the fan performance was referred

ARITHMETIC SPIRAL VOLUTE, WIDTH 8.41 INCHES

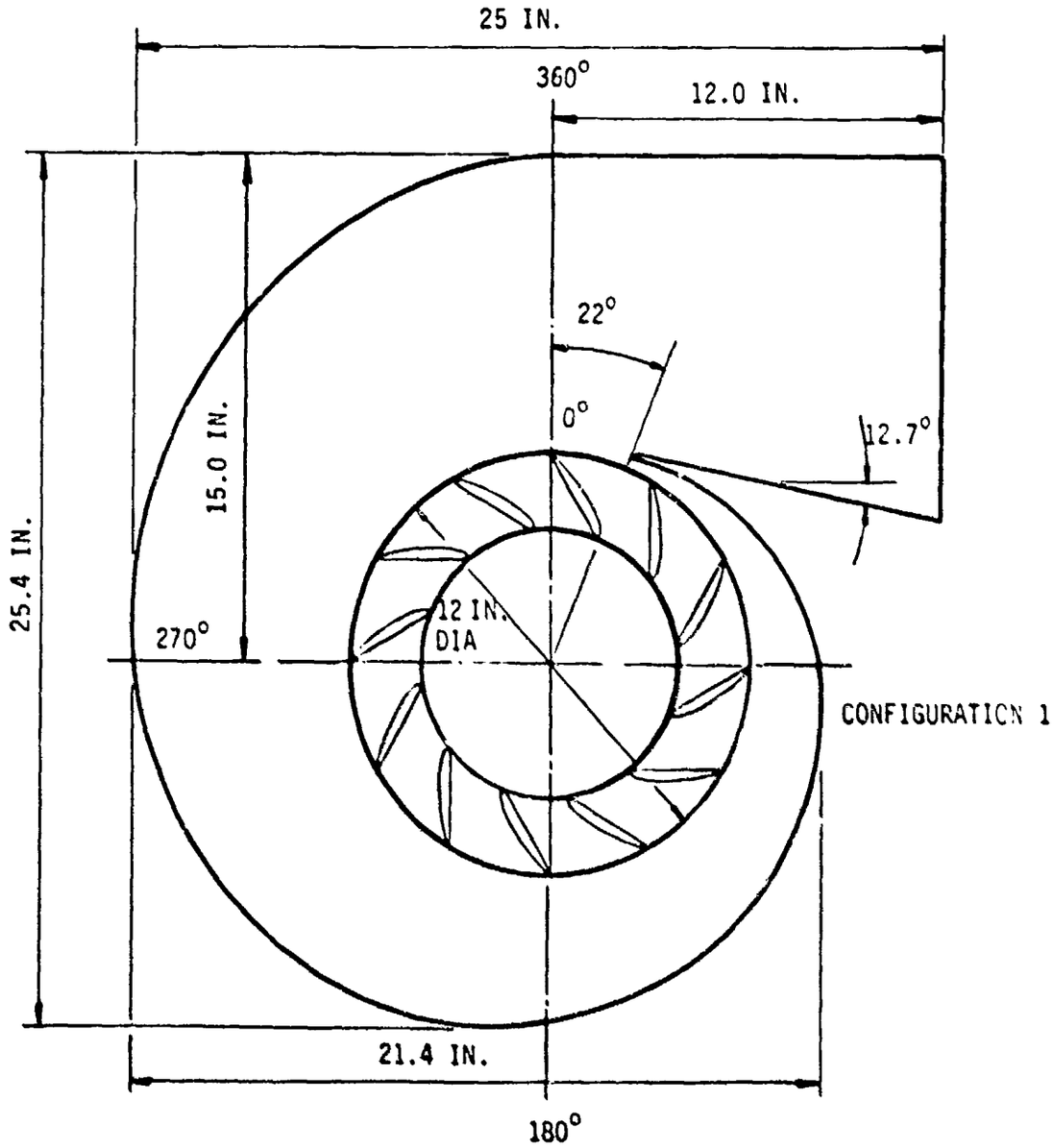

Figure 29 BELL COMPACT VOLUTE, CONFIGURATION 1

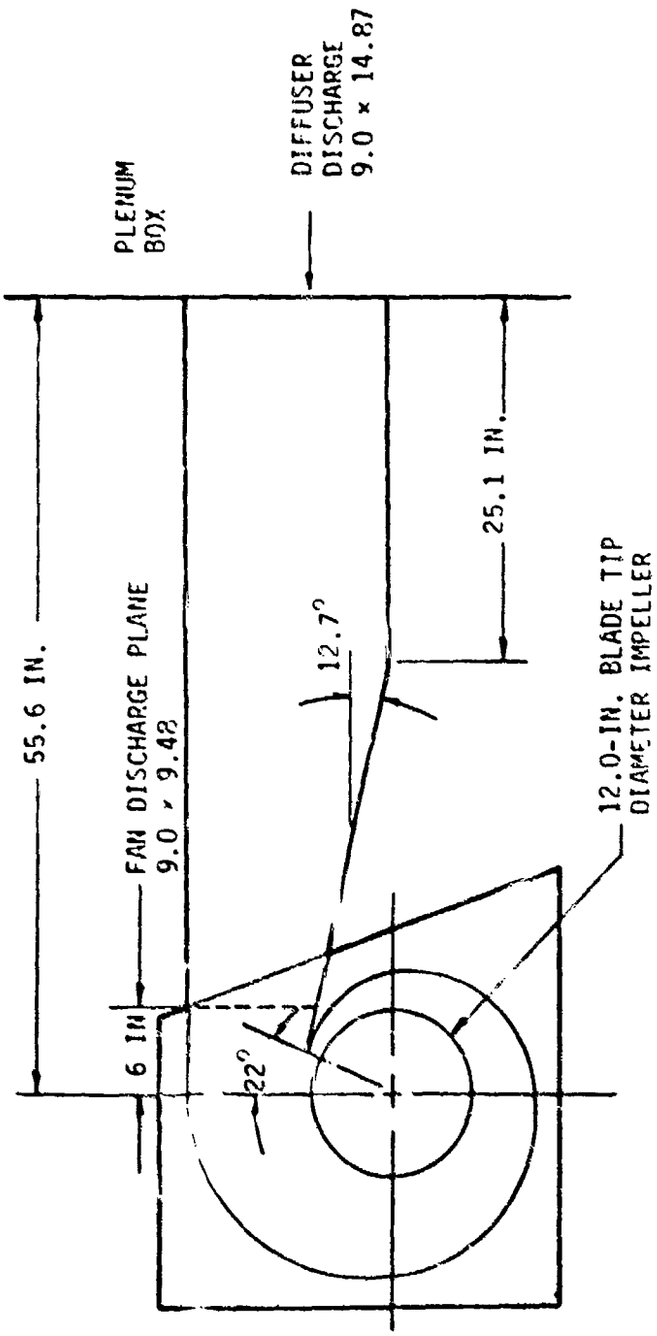

Figure 30 VOLUTE AND DIFFUSER ARRANGEMENT, CONFIGURATION 1

TABLE 4. BELL COMPACT VOLUTE B SIC SPIRAL DEFINITION (CONFIGURATIONS 1, 2, AND 3)

ANGLE (DEGREES)	RADIUS (INCHES)
0	6.00
15	6.38
30	6.75
45	7.13
60	7.50
75	7.88
90	8.25
105	8.63
120	9.00
135	9.38
150	9.75
165	10.13
180	10.50
195	10.88
210	11.25
225	11.63
240	12.00
255	12.38
270	12.75
285	13.13
300	13.50
315	13.88
330	14.26
345	14.63
360	15.00

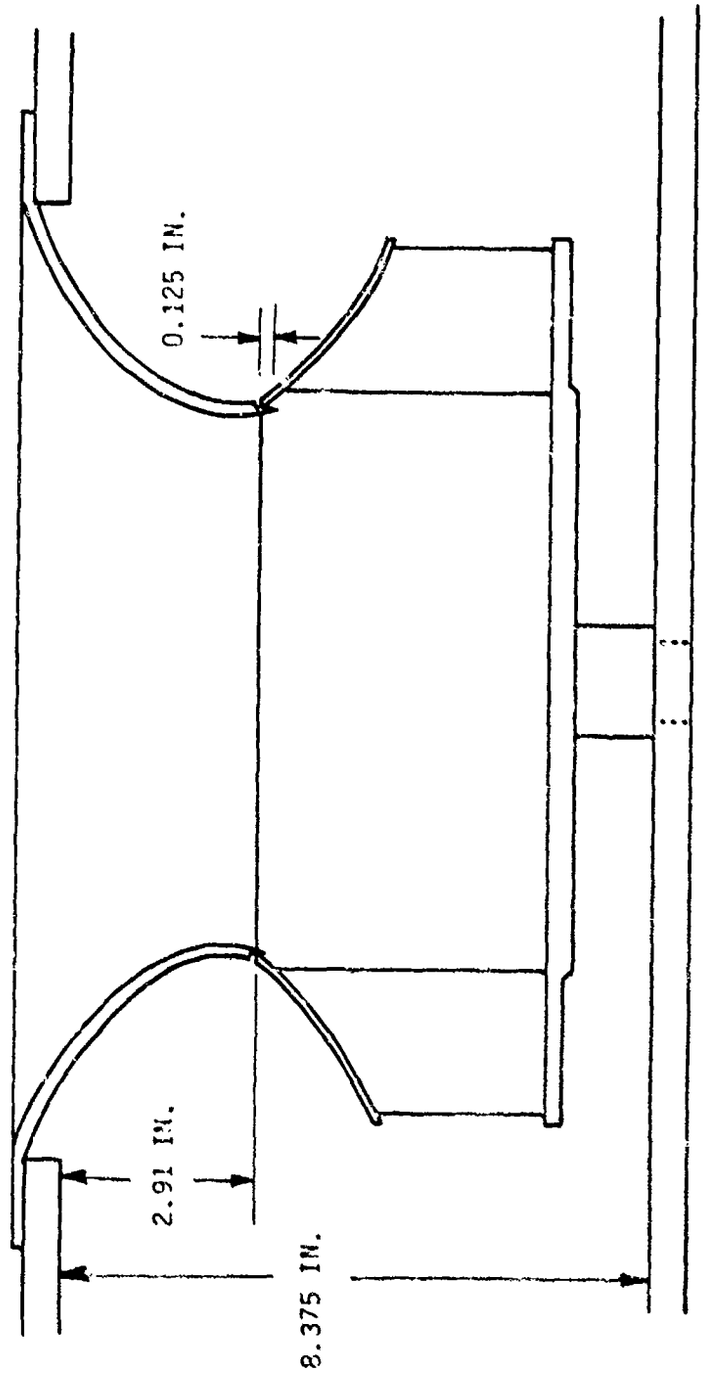

Figure 31 LOCATION OF INLET BELLMOUTH, CONFIGURATION 1, CONDITION 1

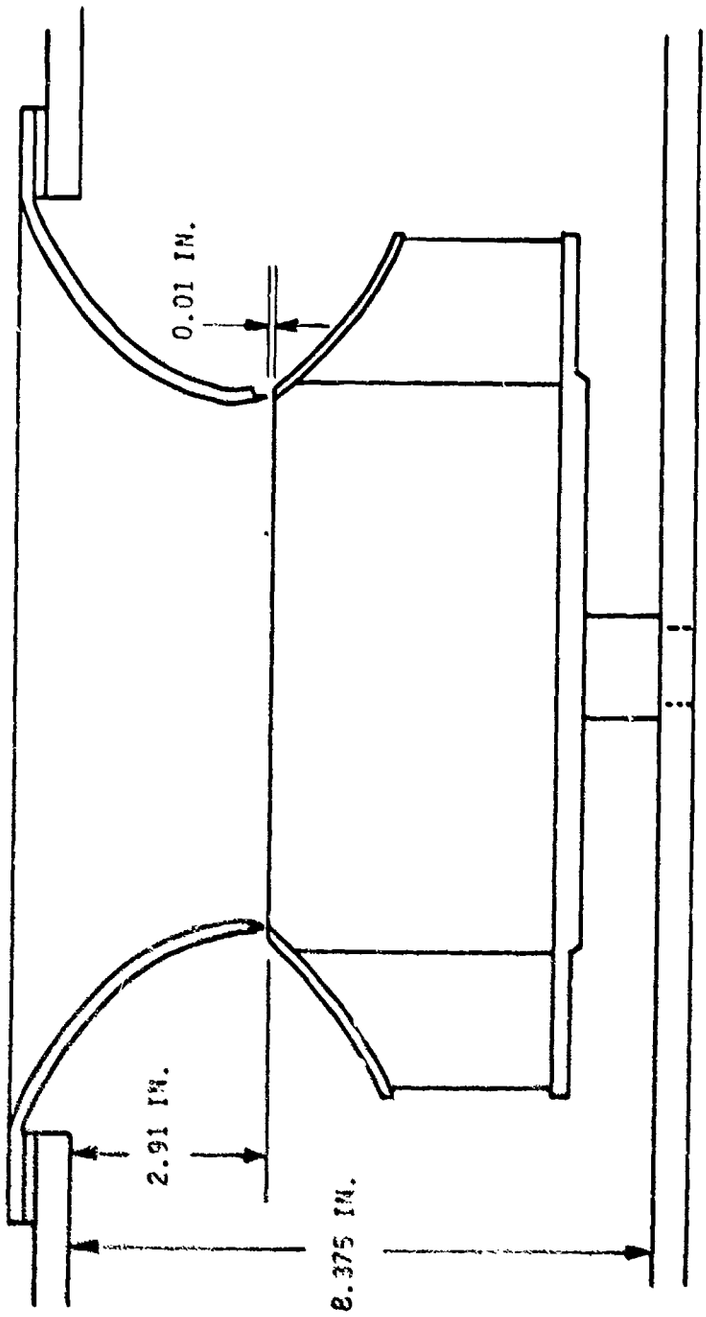

Figure 32 LOCATION OF INLET BELLMOUTH, CONFIGURATION 1, CONDITION 2

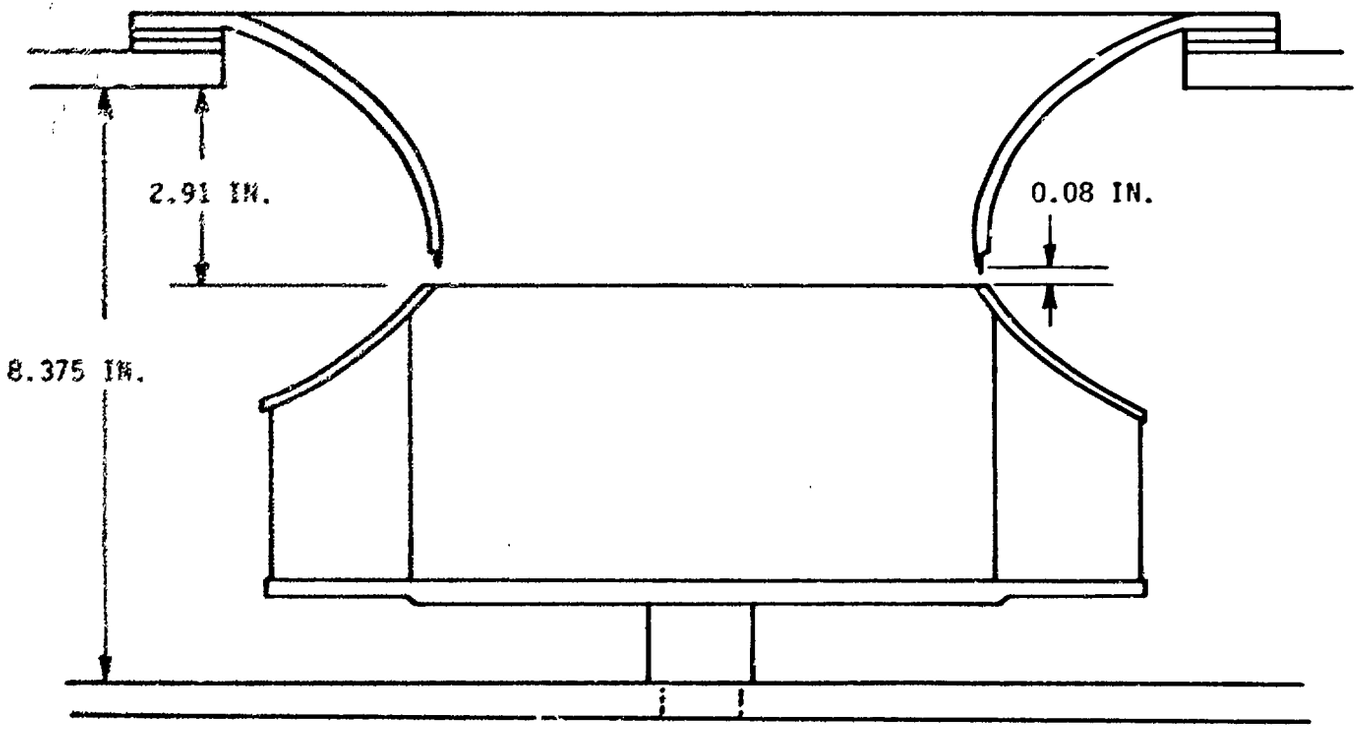

Figure 33 LOCATION OF INLET BELLMOUTH, CONFIGURATION 1, CONDITION 3

Bell Aerospace TEXTRON
Division of Textron Inc

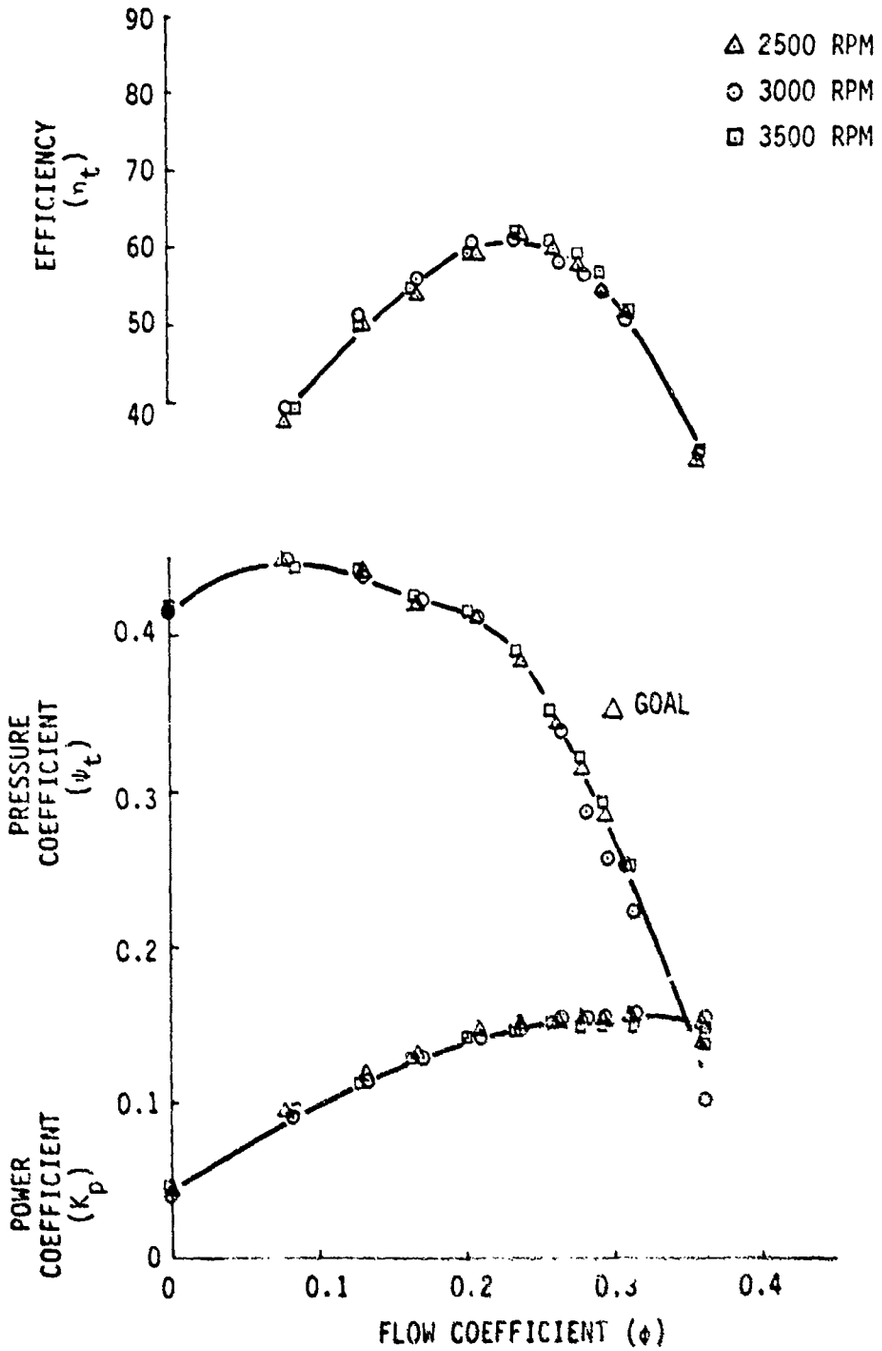

Figure 34 CONFIGURATION 1 PERFORMANCE COMPOSITE

TABLE 5. FAN SPEED 2500 RPM, CONFIGURATION 1*

CENTRIFUGAL FAN TEST DATA REDUCTION PROGRAM
****

(AMCA STANDARD 210-67, FIGURE 4.3)

VOLUTE TYPE - ARITH.SPIRAL
VOLUTE EXIT AREA = 125.06 SQ. IN.

IMPELLER OUTSIDE DIAMETER (INCHES)	12.000
IMPELLER WIDTH FACTOR (SINGLE WIDTH FAN)	0.216
IMPELLER INSIDE DIAMETER (INCHES)	7.982
IMPELLER EXIT BLADE ANGLE (DEGREES)	61.500
NOZZLE DIAMETER (INCHES)	6.994
INCLINATION OF MANOMETER BANKS (DEGREES)	11.533
INCLINATION OF DIFF. MAN. (DEGREES)	11.533
TORQUE ARM LENGTH (INCHES)	10.000
DUCT AREA TO CHAMBER (SQFT)	0.868
DUCT AREA UPSTREAM OF NOZZLE (SQFT)	15.500

BAROMETER HEIGHT (INCHES OF MERCURY)	29.850
AMBIENT AIR TEMPERATURE (DEGREES F)	61.500
WET BULB TEMPERATURE (DEGREES F)	57.000
WATER DENSITY (LBS/CUFT)	62.358
AMBIENT AIR DENSITY (LBS/CUFT)	0.07553

FAN SPEED = 2500 RPM
****

PHI	PHI	PSI TOTAL	PSI STATIC	ETA TOTAL	ETA STATIC	FLOW CFM	PRESS TOTAL IN WG	PRESS STATIC IN WG	POWER HP	KP
0.0	0.0	0.4171	0.4171	0.0	0.0	0.0	3.229	3.229	0.262	0.046
0.0780	0.0674	0.4474	0.4455	0.3737	0.3721	415.9	3.463	3.449	0.607	0.093
0.1316	0.1137	0.4411	0.4357	0.4978	0.4917	701.4	3.415	3.373	0.756	0.117
0.1690	0.1460	0.4195	0.4106	0.5402	0.5287	900.7	3.248	3.179	0.853	0.131
0.2086	0.1802	0.4108	0.3972	0.5922	0.5726	1111.7	3.180	3.075	0.940	0.145
0.2389	0.2064	0.3833	0.3654	0.6146	0.5859	1273.0	2.967	2.829	0.968	0.149
0.2625	0.2268	0.3431	0.3215	0.5949	0.5575	1399.1	2.656	2.489	0.984	0.151
0.2792	0.2413	0.3137	0.2892	0.5739	0.5292	1488.2	2.428	2.239	0.992	0.153
0.2945	0.2544	0.2836	0.2564	0.5429	0.4908	1569.4	2.196	1.985	1.000	0.154
0.3112	0.2689	0.2502	0.2198	0.5060	0.4445	1658.4	1.937	1.701	1.000	0.154
0.3576	0.3090	0.1389	0.0937	0.3267	0.2321	1906.1	1.075	0.764	0.988	0.152

*See figure 35.

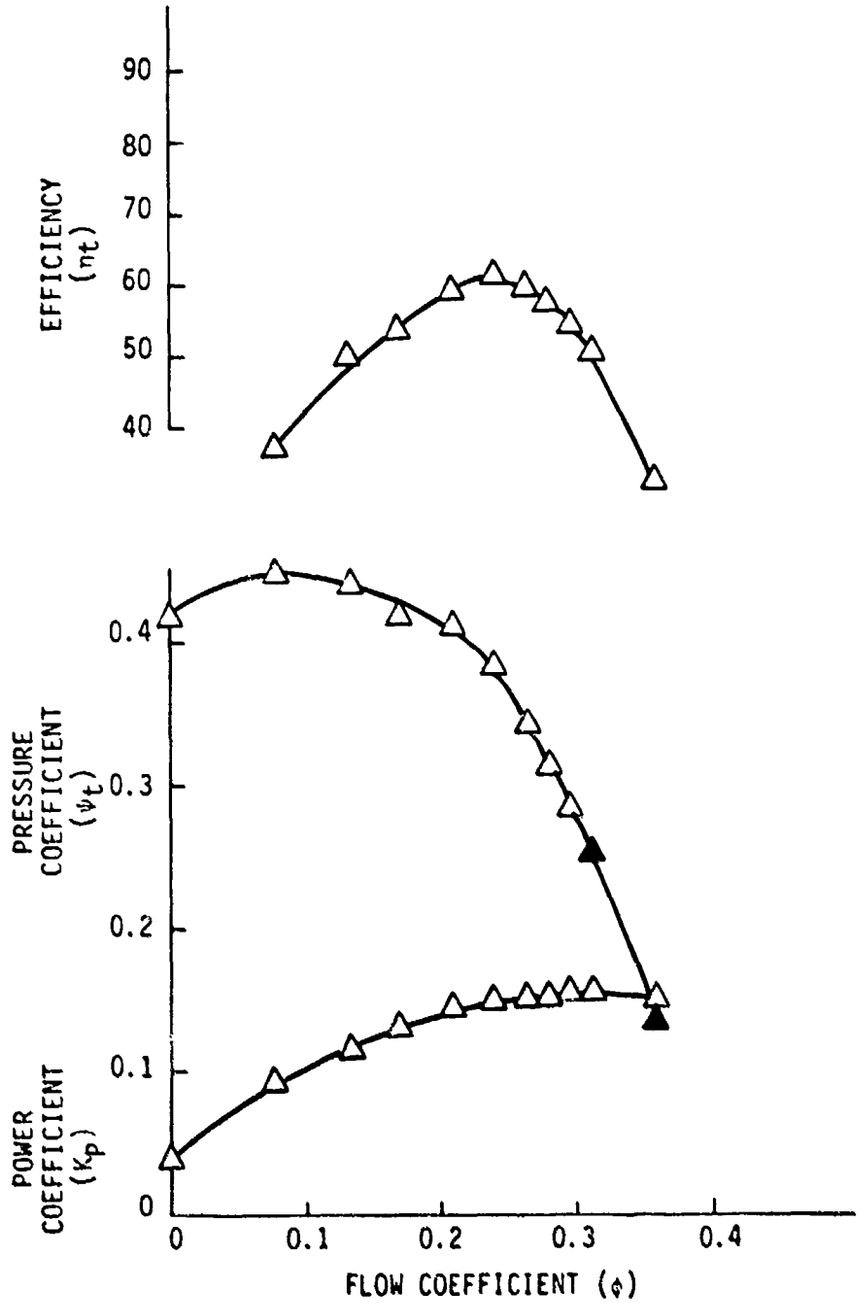

Figure 35 CONFIGURATION 1 PERFORMANCE, 2500 RPM

TABLE 6. FAN SPEED 3000 RPM, CONFIGURATION 1*

CENTRIFUGAL FAN TEST DATA REDUCTION PROGRAM
****

(AMCA STANDARD 210-67, FIGURE 4.3)

VOLUTE TYPE - ARITH.SPIRAL
VOLUTE EXIT AREA = 125.06 SQ. IN.

IMPELLER OUTSIDE DIAMETER (INCHES)	12.000
IMPELLER WIDTH FACTOR (SINGLE WIDTH FAN)	0.216
IMPELLER INSIDE DIAMETER (INCHES)	7.982
IMPELLER EXIT BLADE ANGLE (DEGREES)	61.500
NOZZLE DIAMETER (INCHES)	6.994
INCLINATION OF MANOMETER BANKS (DEGREES)	11.533
INCLINATION OF DIFF. MAN. (DEGREES)	11.533
TORQUE ARM LENGTH (INCHES)	10.000
DUCT AREA TO CHAMBER (SQFT)	0.868
DUCT AREA UPSTREAM OF NOZZLE (SQFT)	15.500

BAROMETER HEIGHT (INCHES OF MERCURY)	29.850
AMBIENT AIR TEMPERATURE (DEGREES F)	62.000
WET BULB TEMPERATURE (DEGREES F)	57.500
WATER DENSITY (LBS/CUFT)	62.355
AMBIENT AIR DENSITY (LBS/CUFT)	0.07545

FAN SPEED = 3000 RPM
****

PHI	PHI	PSI TOTAL	PSI STATIC	ETA TOTAL	ETA STATIC	FLOW CFM	PRESS TOTAL IN WG	PRESS STATIC IN WG	POWER HP	NP
0.0	0.0	0.4151	0.4151	0.0	0.0	0.0	4.622	4.622	0.466	0.042
0.0810	0.0700	0.4481	0.4461	0.3922	0.3904	517.8	4.991	4.968	1.038	0.093
0.1323	0.1143	0.4399	0.4344	0.5097	0.5034	846.1	4.899	4.838	1.280	0.114
0.1704	0.1472	0.4215	0.4125	0.5603	0.5483	1089.6	4.695	4.594	1.438	0.128
0.2070	0.1789	0.4116	0.3984	0.6048	0.5852	1323.9	4.584	4.436	1.580	0.141
0.2361	0.2040	0.3799	0.3626	0.6127	0.5848	1510.2	4.231	4.039	1.642	0.146
0.2650	0.2290	0.3378	0.3160	0.5827	0.5450	1694.9	3.762	3.519	1.723	0.154
0.2820	0.2436	0.3093	0.2845	0.5676	0.5222	1803.4	3.444	3.169	1.723	0.154
0.2984	0.2553	0.2824	0.2553	0.5416	0.4895	1889.5	3.145	2.843	1.728	0.154
0.3120	0.2696	0.2503	0.2199	0.5041	0.4430	1995.6	2.787	2.449	1.737	0.155
0.3599	0.3110	0.1400	0.0996	0.3281	0.2334	2301.7	1.560	1.110	1.723	0.154

*See figure 36.

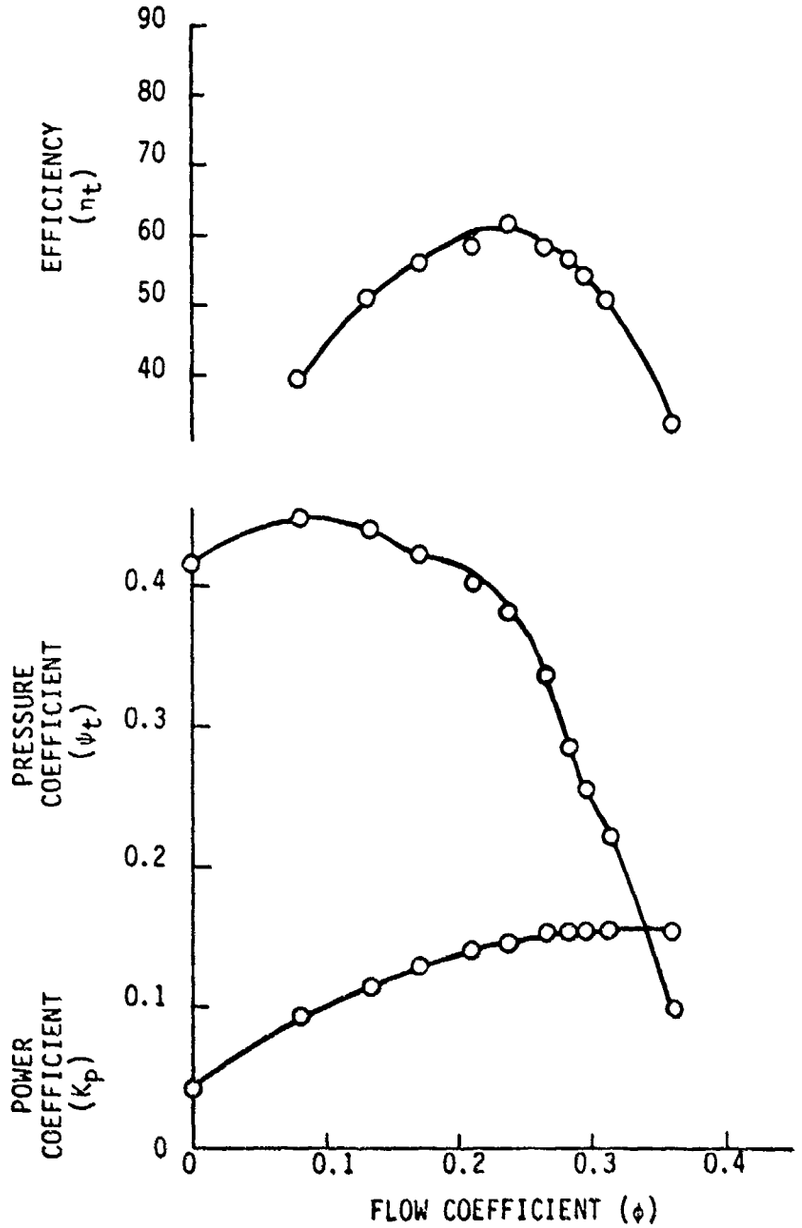

Figure 36 CONFIGURATION 1 PERFORMANCE, 3000 RPM

TABLE 7. FAN SPEED 3500 RPM, CONFIGURATION 1*

CENTRIFUGAL FAN TEST DATA REDUCTION PROGRAM
****

(AMCA STANDARD 210-67, FIGURE 4.3)

VOLUTE TYPE - ARITH.SPIRAL
VOLUTE EXIT AREA = 125.06 SQ. IN.

IMPELLER OUTSIDE DIAMETER (INCHES)	12.000
IMPELLER WIDTH FACTOR (SINGLE WIDTH FAN)	0.216
IMPELLER INSIDE DIAMETER (INCHES)	7.982
IMPELLER EXIT BLADE ANGLE (DEGREES)	61.500
NOZZLE DIAMETER (INCHES)	6.994
INCLINATION OF MANOMETER BANKS (DEGREES)	11.533
INCLINATION OF DIFF. MAN. (DEGREES)	11.533
TORQUE ARM LENGTH (INCHES)	10.000
DUCT AREA TO CHAMBER (SQFT)	0.868
DUCT AREA UPSTREAM OF NOZZLE (SQFT)	15.500

BAROMETER HEIGHT (INCHES OF MERCURY)	29.610
AMBIENT AIR TEMPERATURE (DEGREES F)	56.500
WET BULB TEMPERATURE (DEGREES F)	52.000
WATER DENSITY (LBS/CUFT)	62.384
AMBIENT AIR DENSITY (LBS/CUFT)	0.07572

FAN SPEED = 3500 RPM
****

PHI	FHI	PSI TOTAL	PSI STATIC	ETA TOTAL	ETA STATIC	FLOW CFM	PRESS TOTAL IN WG	PRESS STATIC IN WG	POWER HP	NP
0.0	0.0	0.4161	0.4161	0.0	0.0	0.0	6.328	6.328	0.777	0.044
0.0845	0.0730	0.4479	0.4457	0.3957	0.3937	630.8	6.811	6.778	1.710	0.096
0.1305	0.1127	0.4429	0.4376	0.5000	0.4940	973.6	6.734	6.654	2.066	0.116
0.1659	0.1433	0.4267	0.4181	0.5450	0.5340	1237.7	6.488	6.358	2.321	0.130
0.2020	0.1745	0.4176	0.4049	0.5967	0.5786	1507.0	6.351	6.158	2.527	0.141
0.2349	0.2029	0.3895	0.3723	0.6200	0.5926	1752.6	5.924	5.662	2.638	0.148
0.2586	0.2234	0.3529	0.3320	0.6106	0.5744	1929.4	5.366	5.048	2.671	0.149
0.2761	0.2385	0.3221	0.2982	0.5901	0.5463	2059.9	4.897	4.534	2.693	0.151
0.2933	0.2534	0.2939	0.2669	0.5684	0.5163	2188.2	4.469	4.059	2.710	0.152
0.3119	0.2695	0.2529	0.2223	0.5223	0.4592	2327.1	3.845	3.381	2.699	0.151
0.3601	0.3111	0.1389	0.0979	0.3347	0.2360	2686.9	2.112	1.489	2.671	0.149

*See figure 37.

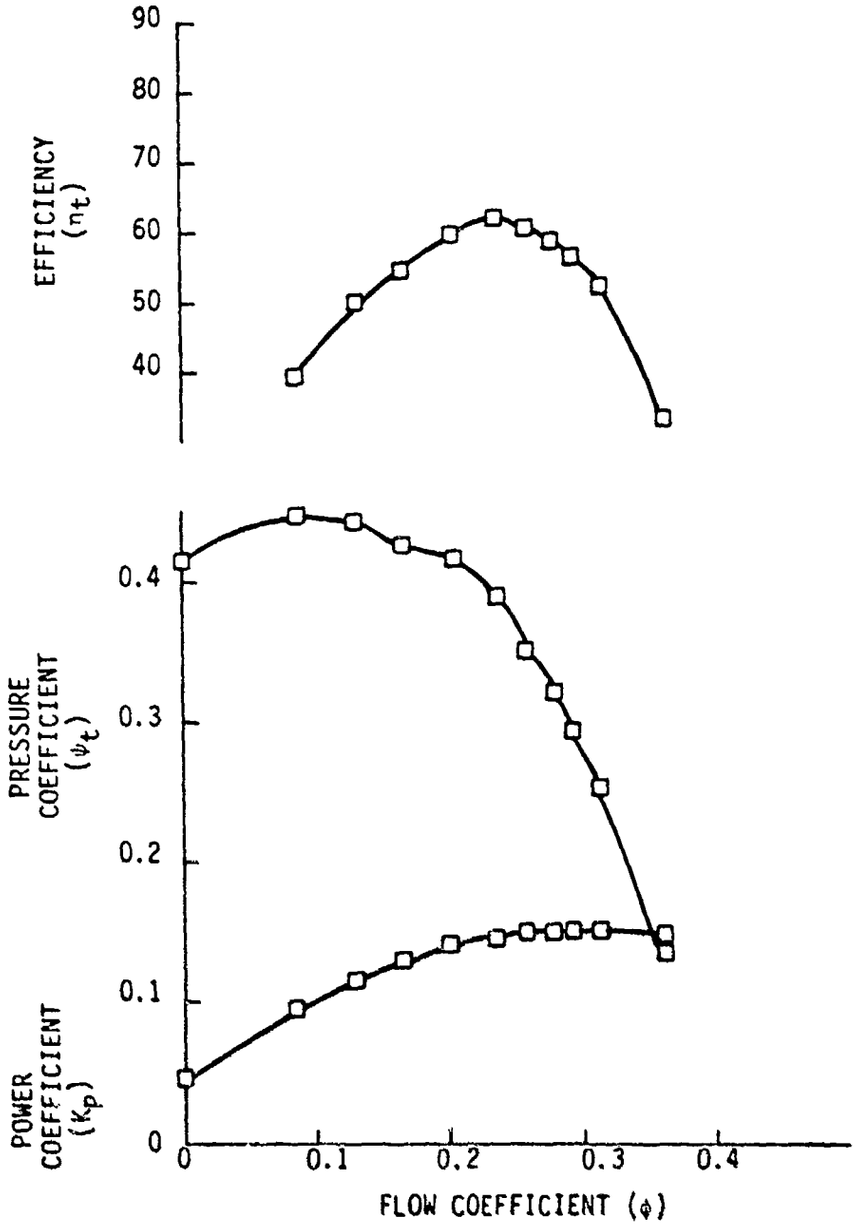

Figure 37 CONFIGURATION 1 PERFORMANCE, 3500 RPM

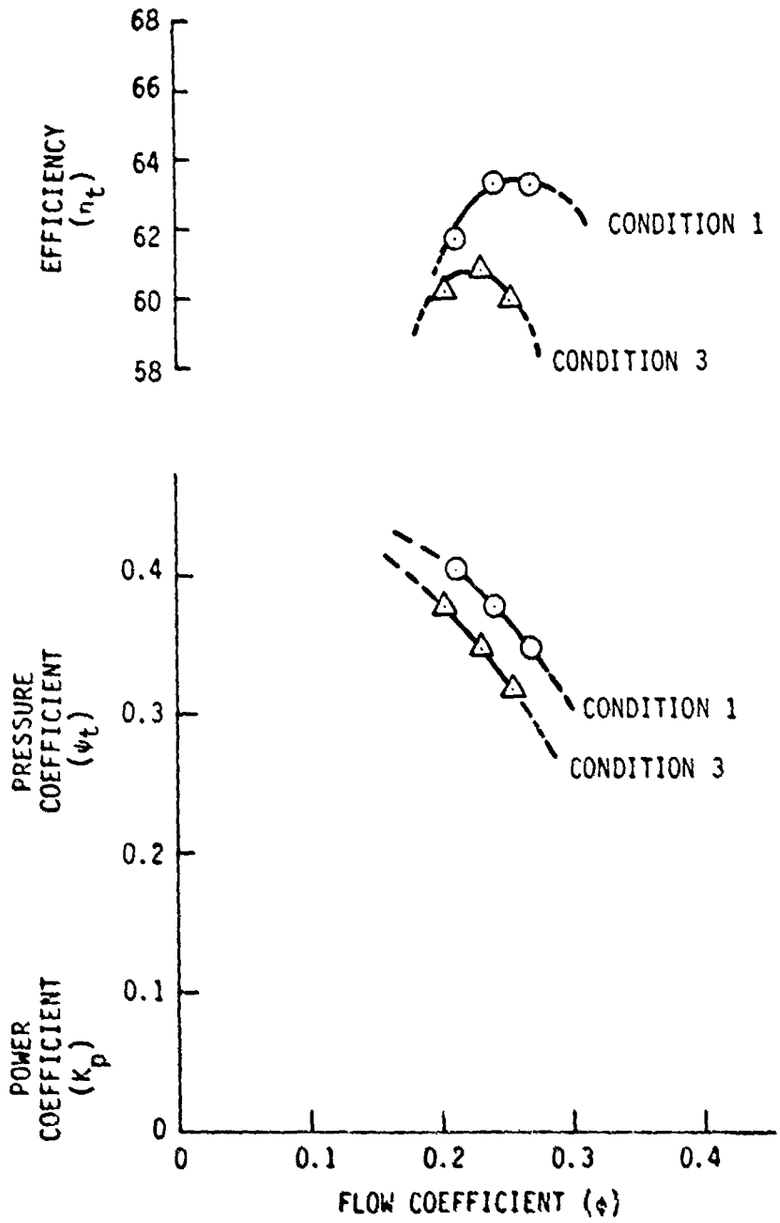

Figure 38 EFFECT OF BELLMOUTH POSITION ON PERFORMANCE, CONFIGURATION 1

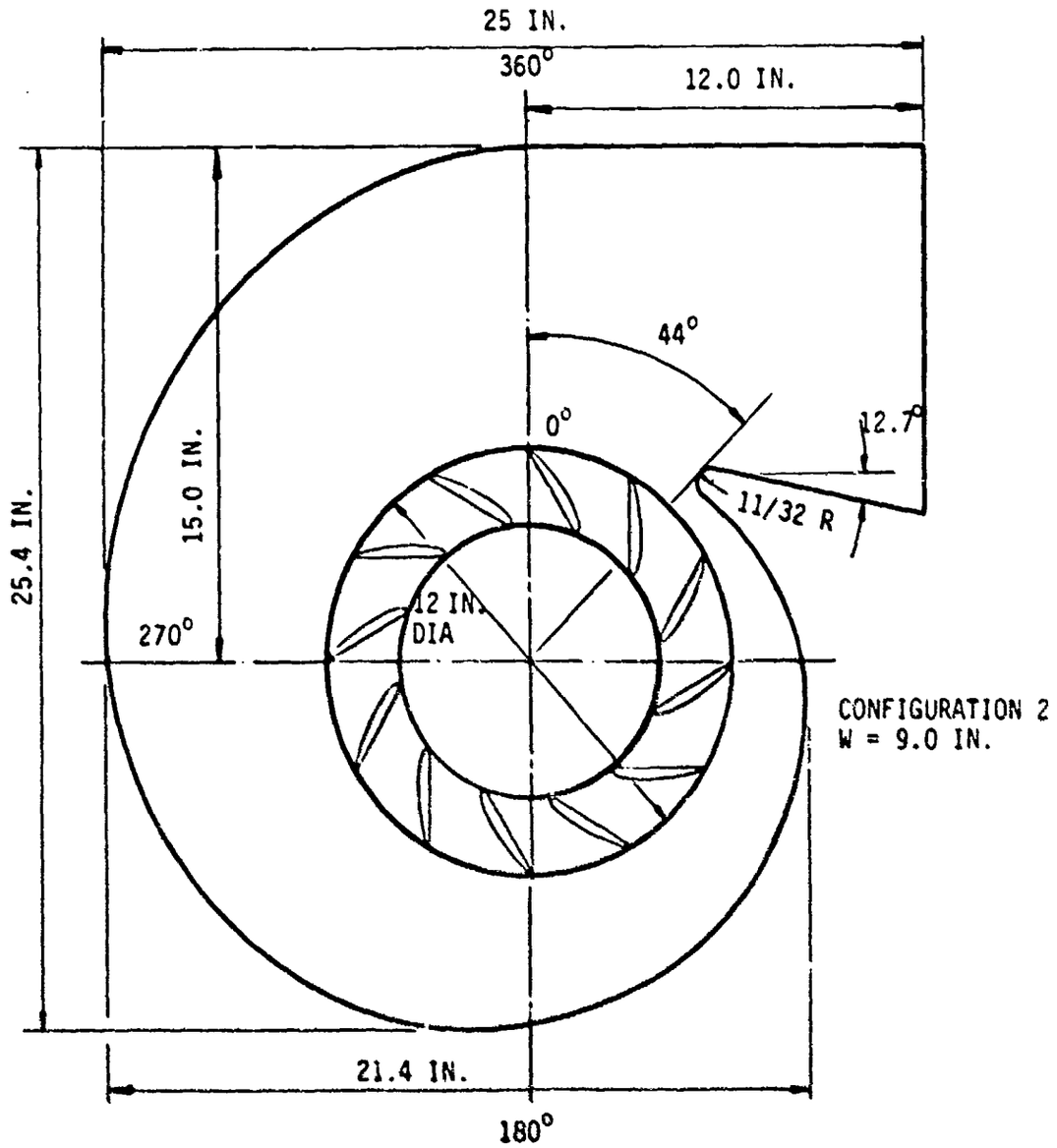

Figure 39 BELL COMPACT VOLUTE, CONFIGURATION 2

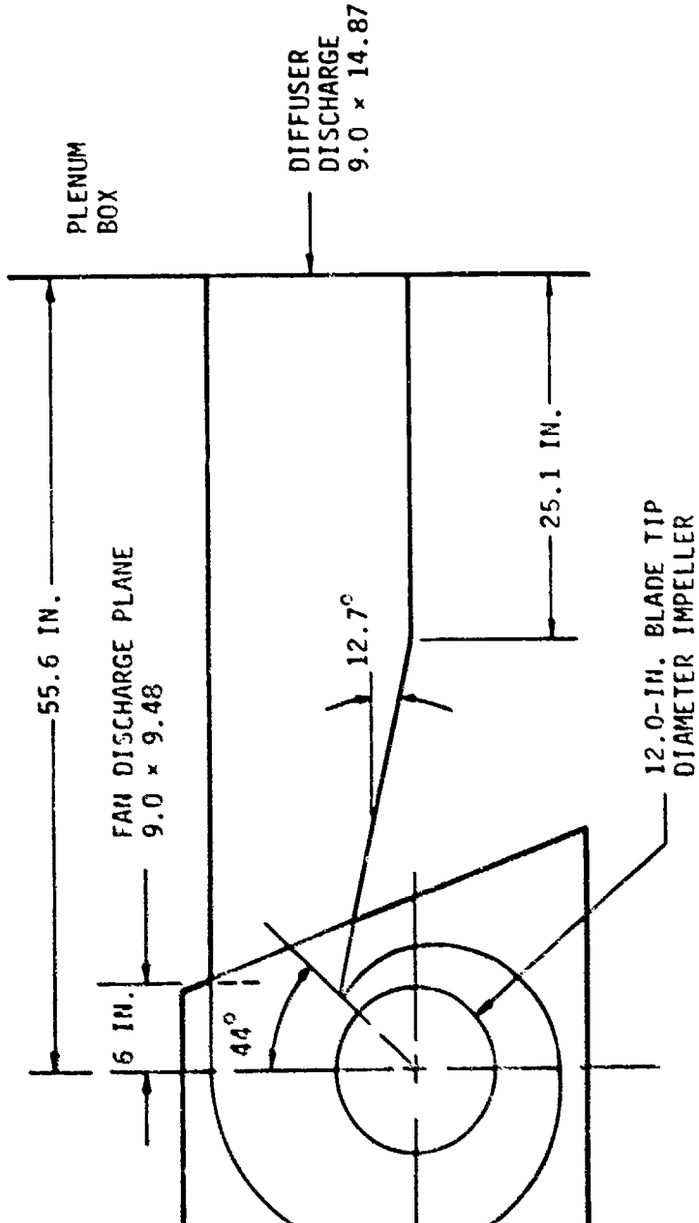

Figure 40 VOLUTE AND DIFFUSER ARRANGEMENT, CONFIGURATION 2

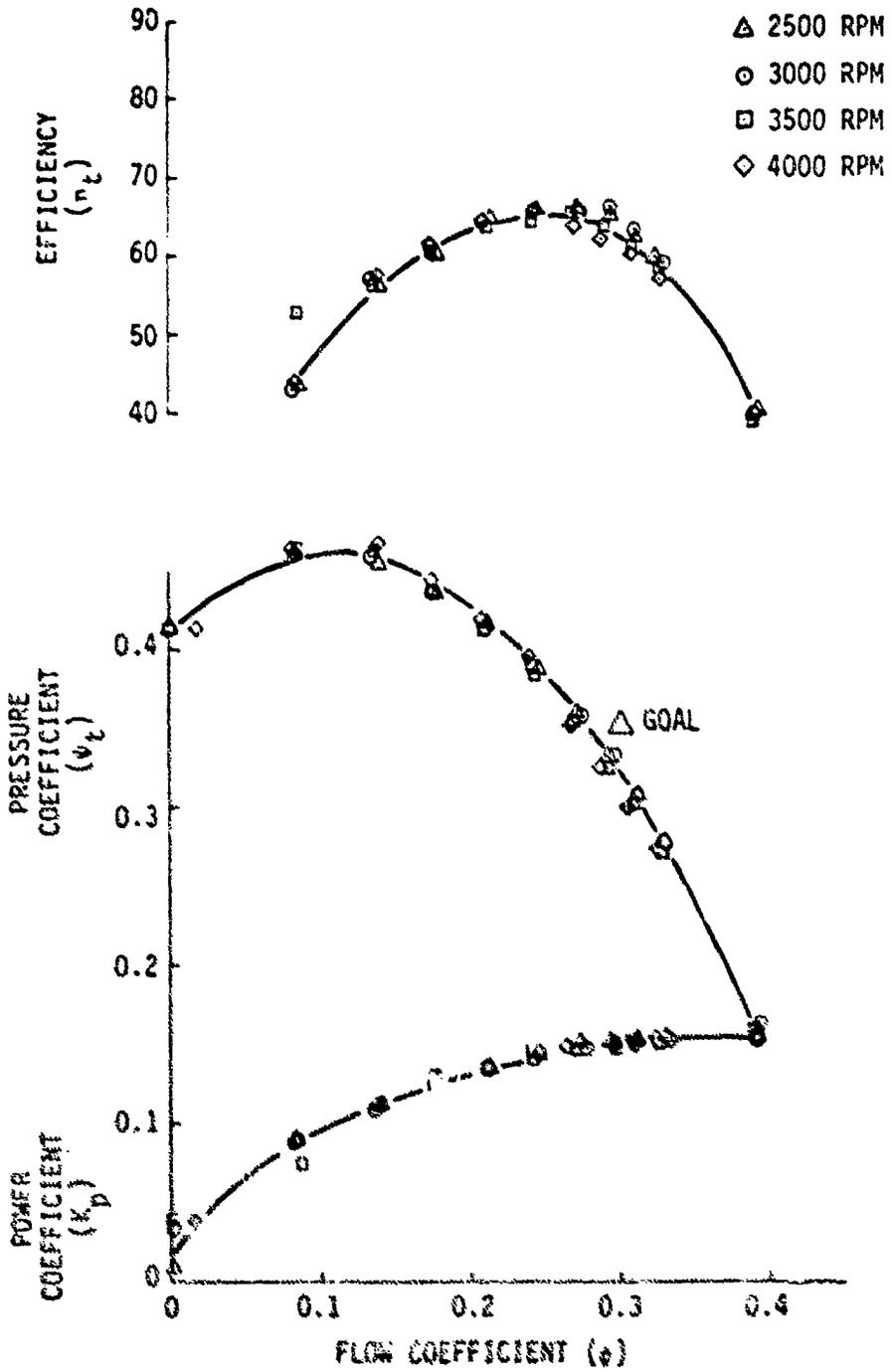

Figure 41 CONFIGURATION 2 PERFORMANCE COMPOSITE

TABLE 8. FAN SPEED 2500 RPM, CONFIGURATION 2*

CENTRIFUGAL FAN TEST DATA REDUCTION PROGRAM
****

(AMCA STANDARD 210-67, FIGURE 4.3)

VOLUTE TYPE - ARITH.SPIRAL
VOLUTE EXIT AREA = 133.83 SQ. IN.

IMPELLER OUTSIDE DIAMETER (INCHES)	12.000
IMPELLER WIDTH FACTOR (SINGLE WIDTH FAN)	0.216
IMPELLER INSIDE DIAMETER (INCHES)	7.982
IMPELLER EXIT BLADE ANGLE (DEGREES)	61.500
NOZZLE DIAMETER (INCHES)	6.994
INCLINATION OF MANOMETER BANKS (DEGREES)	11.533
INCLINATION OF DIFF. MAN. (DEGREES)	11.533
TORQUE ARM LENGTH (INCHES)	10.000
DUCT AREA TO CHAMBER (SQFT)	0.929
DUCT AREA UPSTREAM OF NOZZLE (SQFT)	15.500

BAROMETER HEIGHT (INCHES OF MERCURY)	29.450
AMBIENT AIR TEMPERATURE (DEGREES F)	58.000
WET BULB TEMPERATURE (DEGREES F)	55.500
WATER DENSITY (LBS/CUFT)	62.377
AMBIENT AIR DENSITY (LBS/CUFT)	0.07502

FAN SPEED = 2500 RPM
****

PHI	FHI	PSI TOTAL	PSI STATIC	ETA TOTAL	ETA STATIC	FLOW CFM	PRESS TOTAL IN WG	PRESS STATIC IN WG	POWER HP	NF
0.0	0.0	0.4141	0.4141	0.0	0.0	0.0	3.183	3.183	0.071	0.011
0.0854	0.0738	0.4600	0.4580	0.4350	0.4331	455.3	3.536	3.521	0.583	0.090
0.1389	0.1200	0.4537	0.4484	0.5603	0.5538	740.4	3.487	3.447	0.726	0.112
0.1763	0.1523	0.4345	0.4260	0.5992	0.5874	939.6	3.340	3.275	0.825	0.128
0.2130	0.1840	0.4145	0.4021	0.6470	0.6277	1135.3	3.186	3.091	0.881	0.136
0.2452	0.2118	0.3873	0.3709	0.6573	0.6294	1306.6	2.977	2.851	0.932	0.144
0.2728	0.2357	0.3602	0.3399	0.6579	0.6208	1453.7	2.769	2.613	0.964	0.149
0.2929	0.2531	0.3338	0.3103	0.6493	0.6035	1561.2	2.566	2.385	0.972	0.151
0.3109	0.2686	0.3070	0.2806	0.6237	0.5700	1656.9	2.360	2.157	0.988	0.153
0.3298	0.2850	0.2768	0.2471	0.5966	0.5325	1757.9	2.128	1.899	0.988	0.153
0.3890	0.3361	0.1580	0.1165	0.4032	0.2973	2073.2	1.214	0.896	0.984	0.152

*See figure 42.

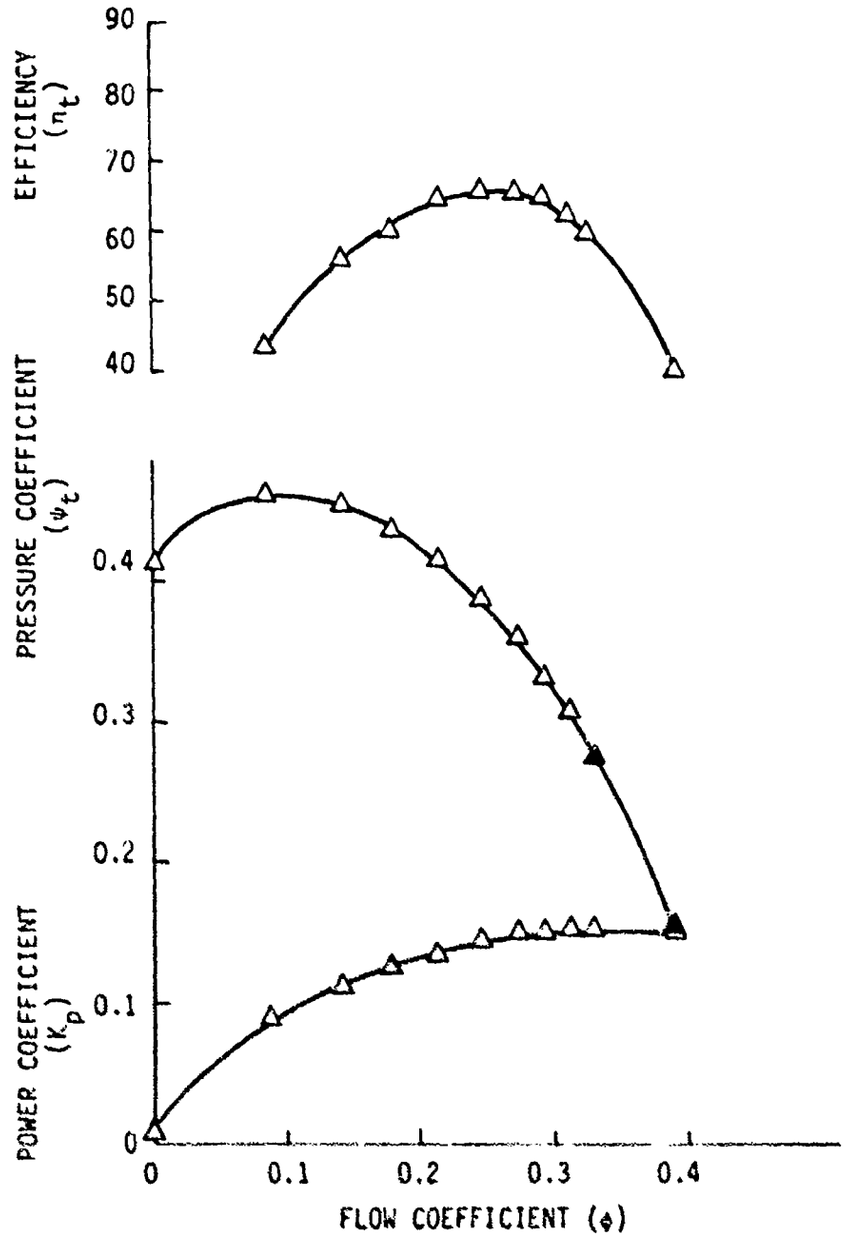

Figure 42 CONFIGURATION 2 PERFORMANCE, 2500 RPM

TABLE 9. FAN SPEED 3000 RPM, CONFIGURATION 2*

CENTRIFUGAL FAN TEST DATA REDUCTION PROGRAM
****

(AMCA STANDARD 210-67, FIGURE 4.3)

VOLUTE TYPE - ARITH.SPIRAL
VOLUTE EXIT AREA = 133.83 SQ. IN.

IMPELLER OUTSIDE DIAMETER (INCHES)	12.000
IMPELLER WIDTH FACTOR (SINGLE WIDTH FAN)	0.216
IMPELLER INSIDE DIAMETER (INCHES)	7.982
IMPELLER EXIT BLADE ANGLE (DEGREES)	61.500
NOZZLE DIAMETER (INCHES)	6.994
INCLINATION OF MANOMETER BANXS (DEGREES)	11.533
INCLINATION OF DIFF. MAN. (DEGREES)	11.533
TORQUE ARM LENGTH (INCHES)	10.000
DUCT AREA TO CHAMBER (SQFT)	0.929
DUCT AREA UPSTREAM OF NOZZLE (SQFT)	15.500

BAROMETER HEIGHT (INCHES OF MERCURY)	29.450
AMBIENT AIR TEMPERATURE (DEGREES F)	58.000
WET BULB TEMPERATURE (DEGREES F)	55.500
WATER DENSITY (LBS/CUFT)	62.377
AMBIENT AIR DENSITY (LBS/CUFT)	0.07502

FAN SPEED = 3000 RPM
****

PHI	PHI	PSI TOTAL	PSI STATIC	ETA TOTAL	ETA STATIC	FLOW CFM	PRESS TOTAL IN WG	PRESS STATIC IN WG	POWER HP	NP
0.0	0.0	0.4136	0.4136	0.0	0.0	0.0	4.578	4.578	0.390	0.035
0.0817	0.0706	0.4609	0.4591	0.4327	0.4310	522.8	5.102	5.082	0.971	0.087
0.1354	0.1170	0.4587	0.4537	0.5729	0.5667	866.1	5.077	5.022	1.209	0.108
0.1748	0.1510	0.4346	0.4262	0.6114	0.5997	1117.7	4.811	4.718	1.385	0.124
0.2104	0.1818	0.4130	0.4010	0.6463	0.6274	1345.5	4.572	4.438	1.499	0.134
0.2419	0.2090	0.3884	0.3724	0.6570	0.6301	1547.2	4.299	4.123	1.595	0.143
0.2720	0.2350	0.3574	0.3372	0.6582	0.6211	1739.7	3.956	3.733	1.647	0.148
0.2941	0.2541	0.3333	0.3098	0.6599	0.6132	1880.6	3.690	3.429	1.656	0.149
0.3104	0.2682	0.3081	0.2818	0.6311	0.5771	1985.1	3.411	3.119	1.690	0.152
0.3288	0.2840	0.2767	0.2471	0.5903	0.5271	2102.6	3.063	2.735	1.718	0.154
0.3906	0.3374	0.1606	0.1188	0.4060	0.3004	2497.9	1.778	1.316	1.723	0.155

*See figure 43.

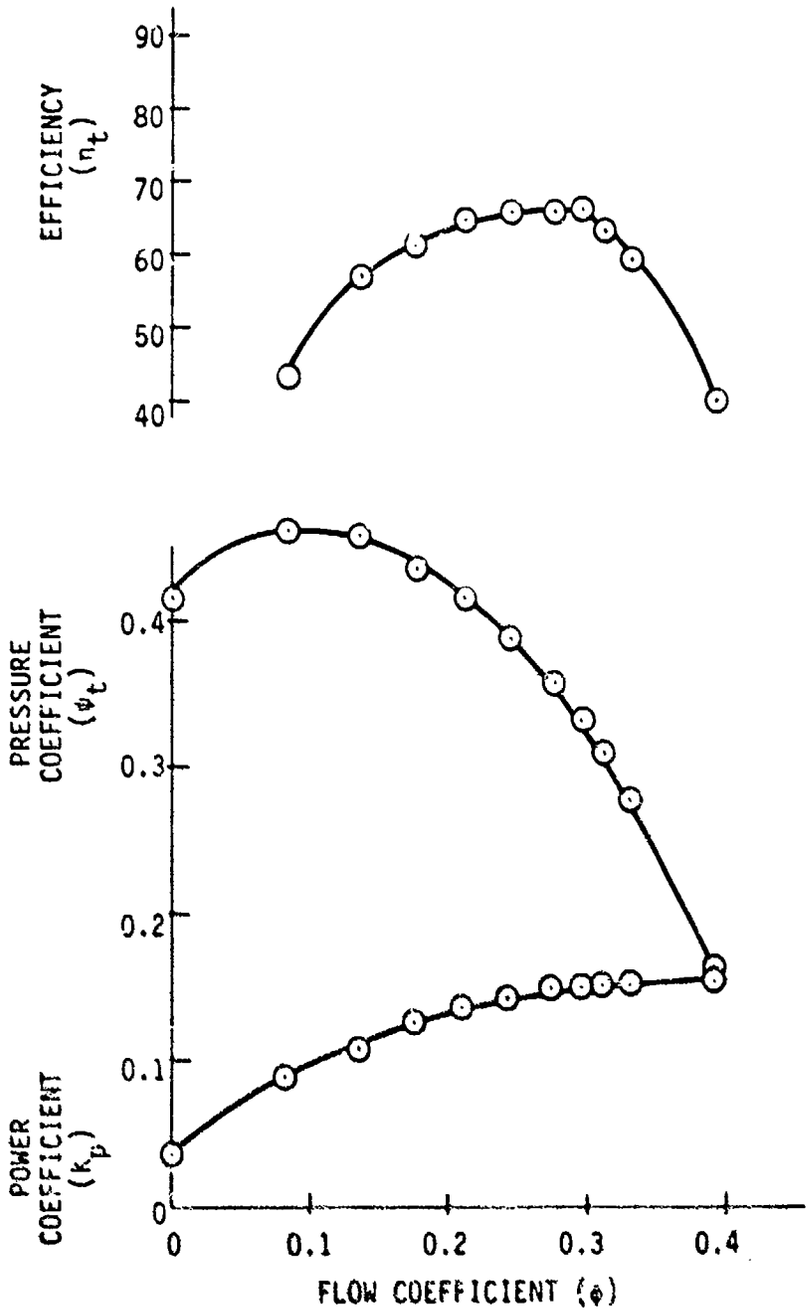

Figure 43 CONFIGURATION 2 PERFORMANCE, 3000 RPM

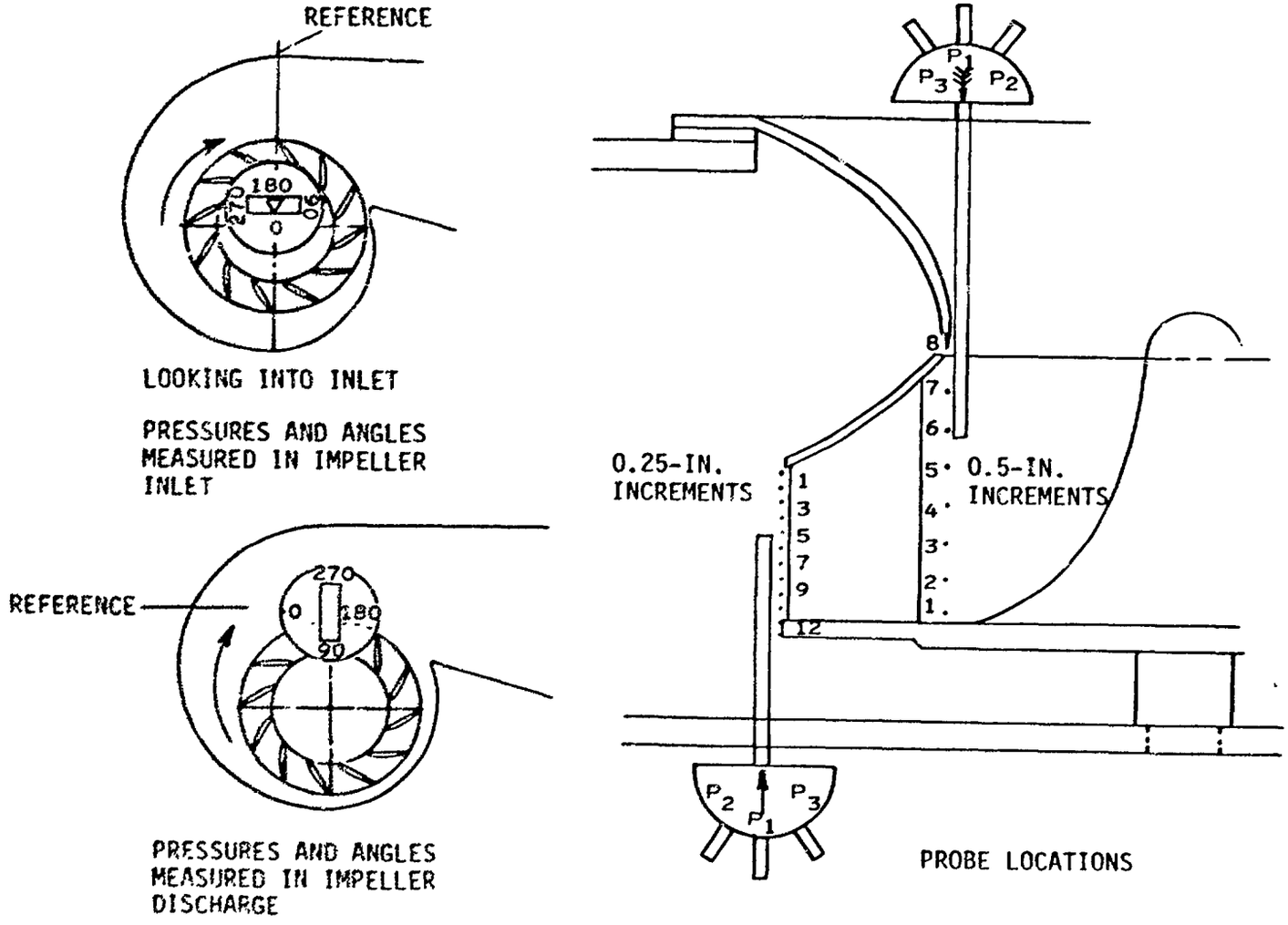

Figure 27 IMPELLER BLADE INLET AND DISCHARGE SURVEY LOCATIONS

Bell Aerospace TEXTRON
Division of Textron Inc

TABLE 10. FAN SPEED 3500 RPM, CONFIGURATION 2*

CENTRIFUGAL FAN TEST DATA REDUCTION PROGRAM
****

(AMCA STANDARD 210-67, FIGURE 4.3)

VOLUTE TYPE - ARITH.SPIRAL
VOLUTE EXIT AREA = 133.83 SQ. IN.

IMPELLER OUTSIDE DIAMETER (INCHES)	12.000
IMPELLER WIDTH FACTOR (SINGLE WIDTH FAN)	0.216
IMPELLER INSIDE DIAMETER (INCHES)	7.982
IMPELLER EXIT BLADE ANGLE (DEGREES)	61.500
NOZZLE DIAMETER (INCHES)	6.994
INCLINATION OF MANOMETER BANKS (DEGREES)	11.533
INCLINATION OF DIFF. MAN. (DEGREES)	11.533
TORQUE ARM LENGTH (INCHES)	10.000
DUCT AREA TO CHAMBER (SQFT)	0.929
DUCT AREA UPSTREAM OF NOZZLE (SQFT)	15.500
BAROMETER HEIGHT (INCHES OF MERCURY)	29.450
AMBIENT AIR TEMPERATURE (DEGREES F)	58.500
WET BULB TEMPERATURE (DEGREES F)	55.500
WATER DENSITY (LBS/CUFT)	62.374
AMBIENT AIR DENSITY (LBS/CUFT)	0.07495

FAN SPEED = 3500 RPM
****

PHI	FHI	PSI TOTAL	PSI STATIC	ETA TOTAL	ETA STATIC	FLOW CFM	PRESS TOTAL IN WG	PRESS STATIC IN WG	POWER HP	KP
0.0	0.0	0.4124	0.4124	0.0	0.0	0.0	6.208	6.208	0.650	0.037
0.0832	0.0719	0.4630	0.4611	0.5311	0.5290	620.6	6.970	6.941	1.283	0.073
0.1363	0.1178	0.4589	0.4538	0.5663	0.5600	1017.4	6.908	6.832	1.955	0.110
0.1751	0.1513	0.4356	0.4272	0.6074	0.5958	1306.3	6.557	6.432	2.221	0.126
0.2082	0.1799	0.4112	0.3994	0.6358	0.6175	1553.5	6.190	6.012	2.382	0.135
0.2393	0.2068	0.3848	0.3692	0.6463	0.6201	1785.9	5.793	5.558	2.521	0.143
0.2602	0.2317	0.3546	0.3349	0.6501	0.6141	2001.1	5.338	5.042	2.588	0.146
0.2901	0.2507	0.3255	0.3025	0.6334	0.5887	2164.6	4.900	4.554	2.638	0.149
0.3077	0.2659	0.3017	0.2758	0.6124	0.5599	2296.0	4.542	4.153	2.682	0.152
0.3265	0.2821	0.2725	0.2433	0.5820	0.5197	2436.2	4.102	3.663	2.704	0.153
0.3879	0.3352	0.1565	0.1153	0.3956	0.2913	2894.4	2.356	1.735	2.716	0.153

*See figure 44.

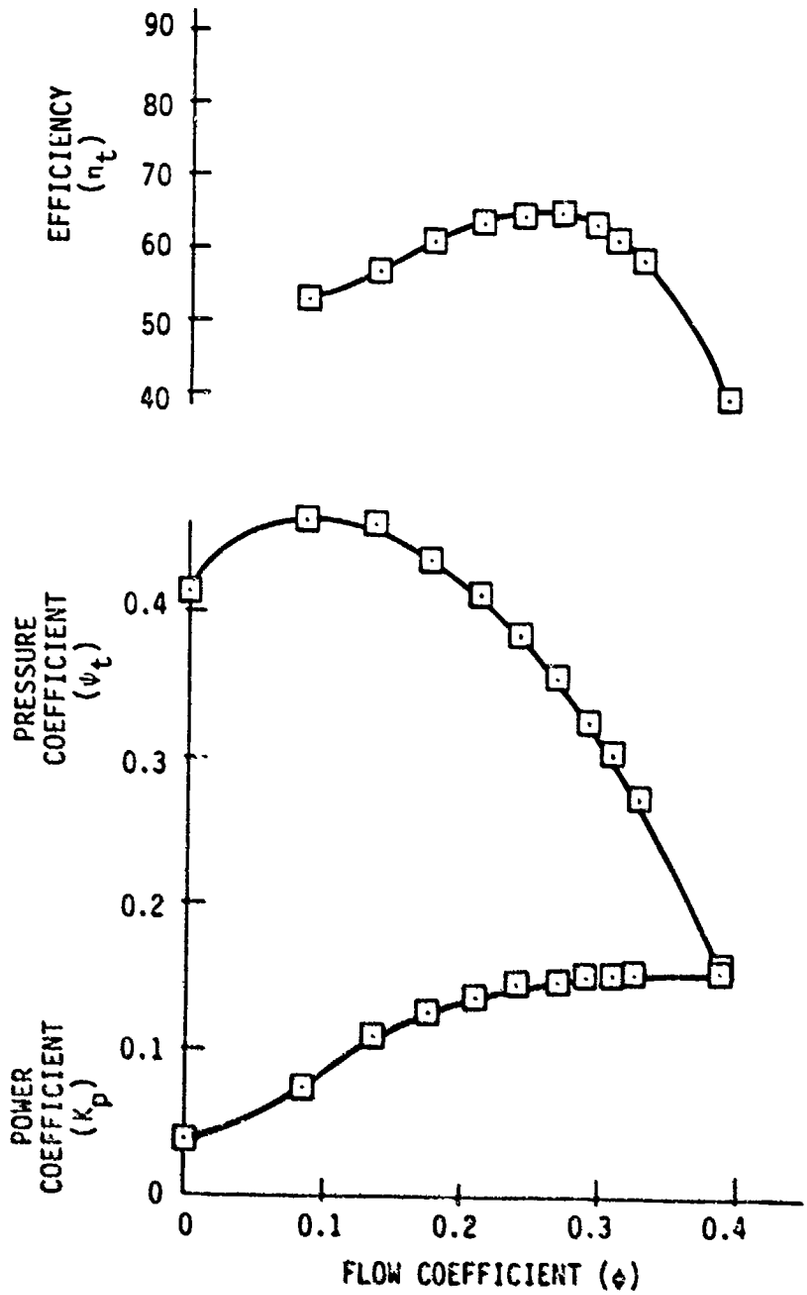

Figure 44 CONFIGURATION 2 PERFORMANCE, 3500 RPM

TABLE 11. FAN SPEED 4000 RPM, CONFIGURATION 2*

CENTRIFUGAL FAN TEST DATA REDUCTION PROGRAM
****

(AMCA STANDARD 210-67, FIGURE 4.3)

VOLUTE TYPE - ARITH.SPIRAL
VOLUTE EXIT AREA = 133.83 SQ. IN.

IMPELLER OUTSIDE DIAMETER (INCHES)	12.000
IMPELLER WIDTH FACTOR (SINGLE WIDTH FAN)	0.216
IMPELLER INSIDE DIAMETER (INCHES)	7.982
IMPELLER EXIT BLADE ANGLE (DEGREES)	61.500
NOZZLE DIAMETER (INCHES)	6.994
INCLINATION OF MANOMETER BANKS (DEGREES)	11.533
INCLINATION OF DIFF. MAN. (DEGREES)	11.533
TORQUE ARM LENGTH (INCHES)	10.000
DUCT AREA TO CHAMBER (SQFT)	0.929
DUCT AREA UPSTREAM OF NOZZLE (SQFT)	15.500

BAROMETER HEIGHT (INCHES OF MERCURY)	29.450
AMBIENT AIR TEMPERATURE (DEGREES F)	59.000
WET BULB TEMPERATURE (DEGREES F)	56.000
WATER DENSITY (LBS/CUFT)	62.372
AMBIENT AIR DENSITY (LBS/CUFT)	0.07487

FAN SPEED = 4000 RPM
****

PHI	PHI	PSI TOTAL	PSI STATIC	ETA TOTAL	ETA STATIC	FLOW CFM	PRESS TOTAL IN WG	PRESS STATIC IN WG	POWER HP	NP
0.0172	0.0149	0.4166	0.4165	0.1819	0.1819	146.9	8.183	8.181	1.041	0.039
0.0832	0.0719	0.4622	0.4603	0.4342	0.4324	709.3	9.078	9.041	2.336	0.089
0.1390	0.1201	0.4670	0.4618	0.5742	0.5678	1185.4	9.173	9.071	2.983	0.113
0.1750	0.1512	0.4447	0.4365	0.6127	0.6013	1492.2	8.735	8.573	3.351	0.127
0.2087	0.1804	0.4195	0.4077	0.6442	0.6260	1780.0	8.239	8.007	3.586	0.136
0.2398	0.2072	0.3954	0.3799	0.6483	0.6227	2044.8	7.767	7.461	3.859	0.146
0.2663	0.2301	0.3531	0.3339	0.6387	0.6038	2270.7	6.936	6.558	3.884	0.147
0.2881	0.2489	0.3269	0.3043	0.6254	0.5822	2456.5	6.421	5.978	3.973	0.151
0.3073	0.2655	0.3001	0.2744	0.6037	0.5521	2620.7	5.894	5.390	4.030	0.153
0.3262	0.2819	0.2712	0.2423	0.5711	0.5101	2781.8	5.327	4.758	4.087	0.155

*See figure 45.

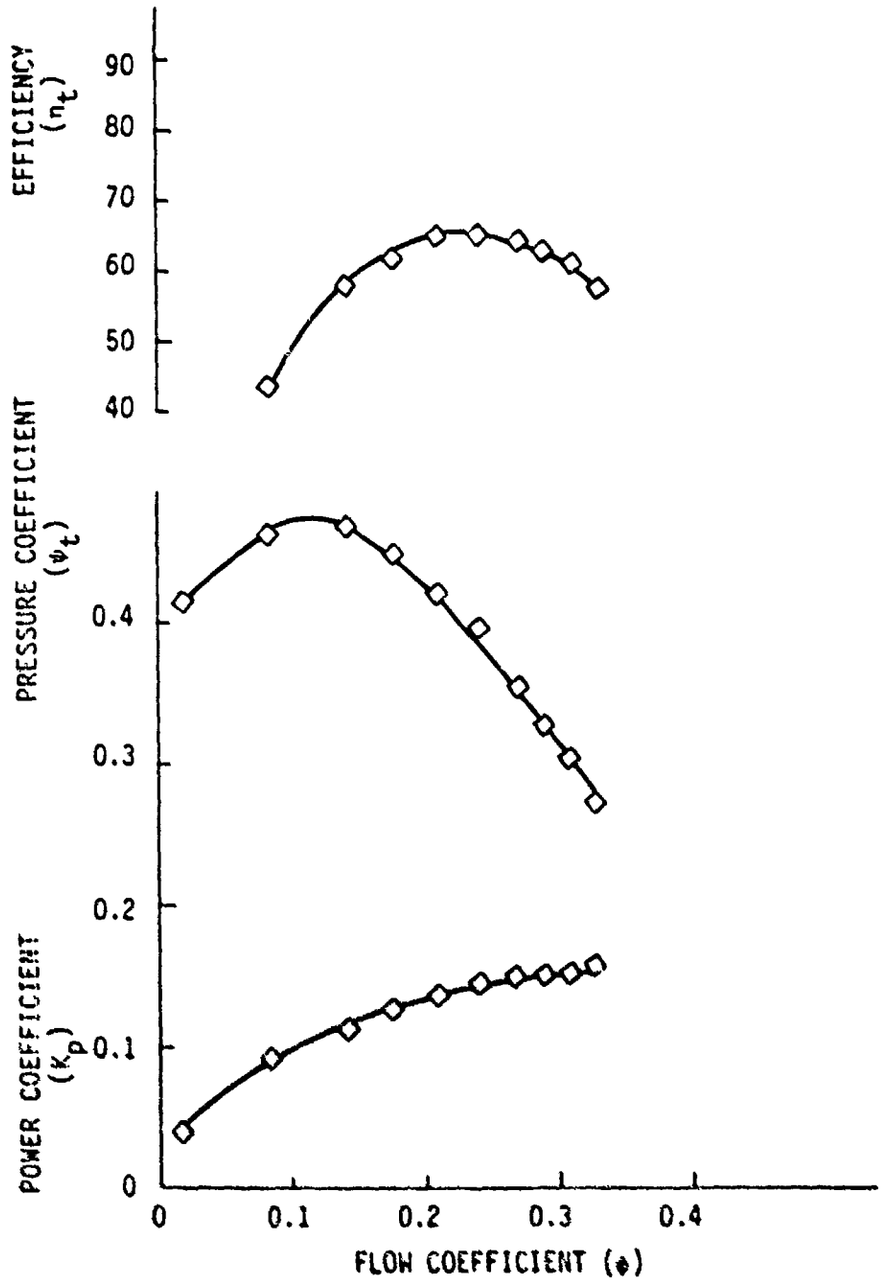

Figure 45 CONFIGURATION 2 PERFORMANCE, 4000 RPM

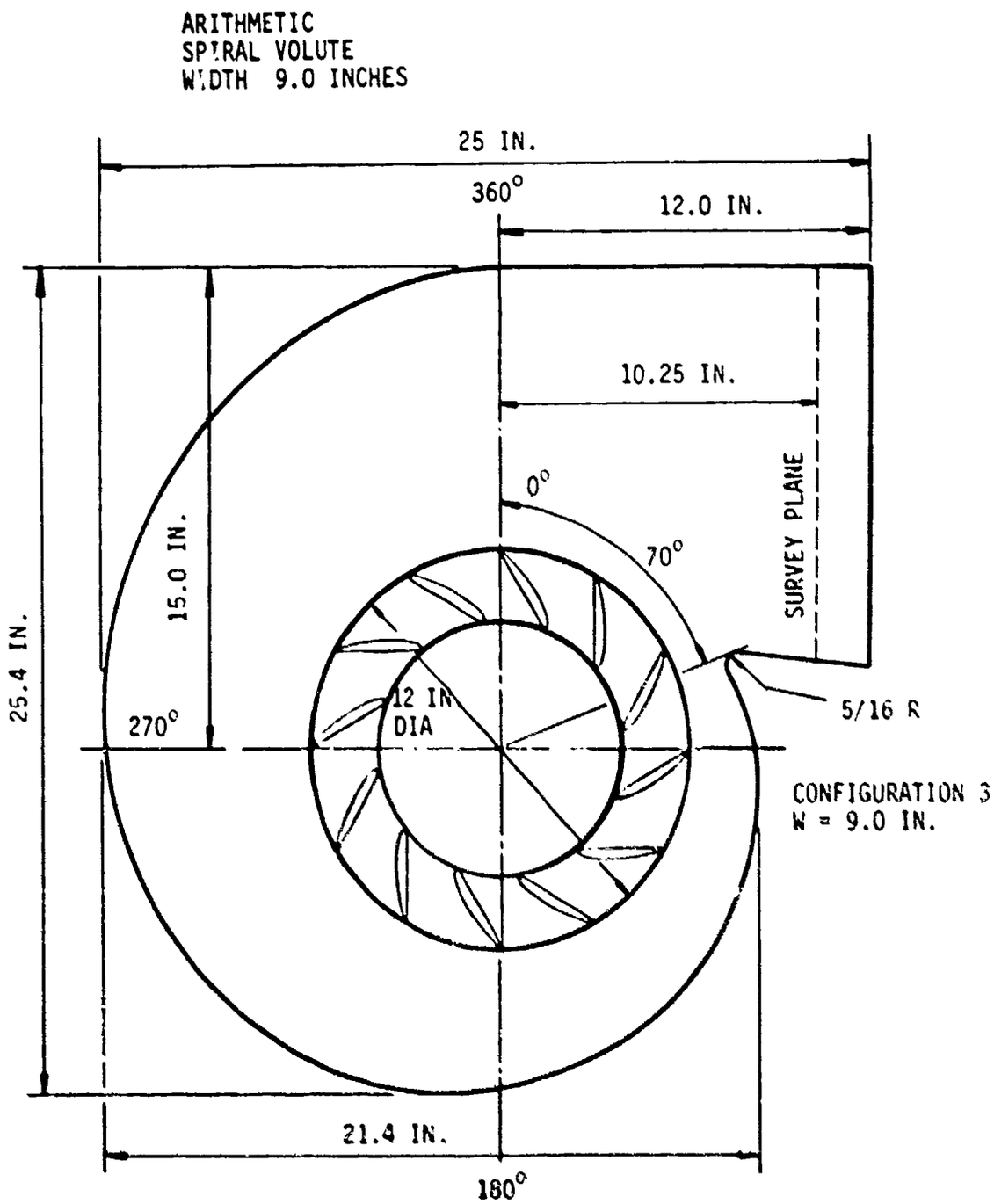

Figure 46 BELL COMPACT VOLUTE, CONFIGURATION 3

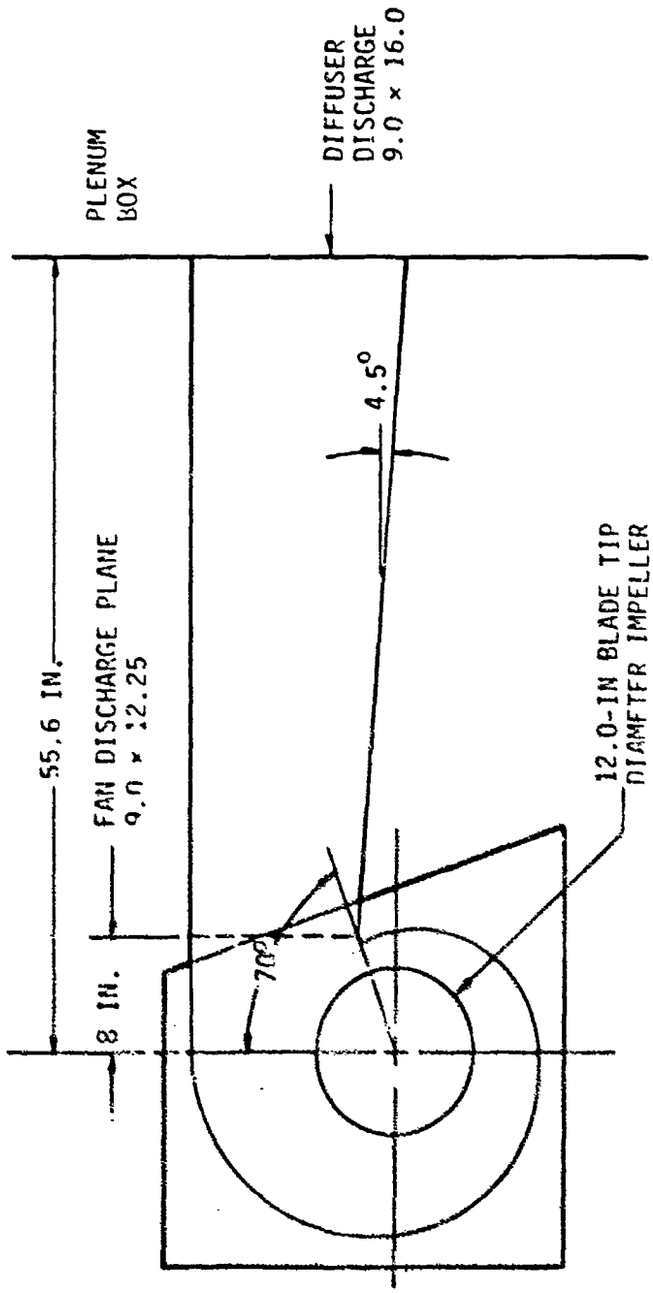

Figure 47 VOLUTE AND DIFFUSER ARRANGEMENT, CONFIGURATION 3

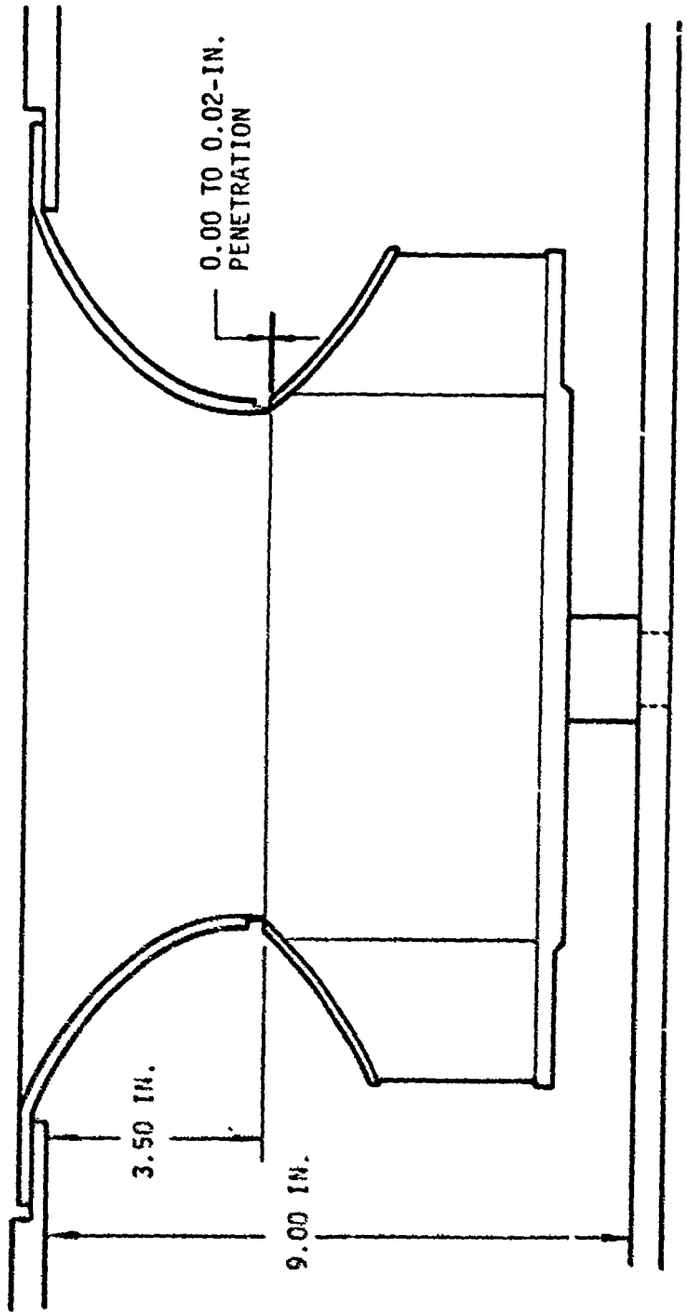

Figure 48 LOCATION OF INLET BELLMOUTH, CONFIGURATION 3

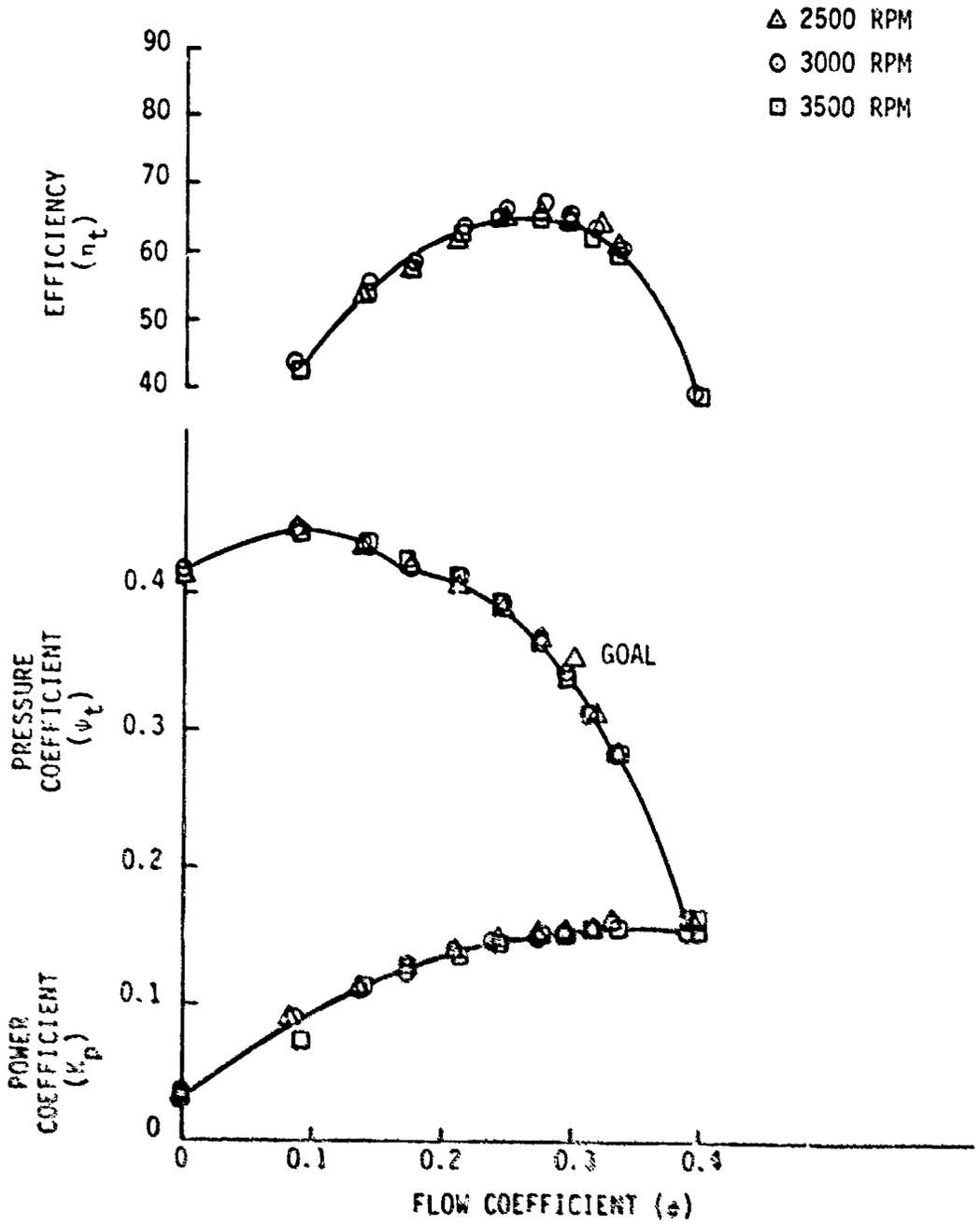

Figure 49 CONFIGURATION 3 PERFORMANCE COMPOSITE

TABLE 12. FAN SPEED 2500 RPM, CONFIGURATION 3*

CENTRIFUGAL FAN TEST DATA REDUCTION PROGRAM
****

(AMCA STANDARD 210-67, FIGURE 4.3)

VOLUTE TYPE - ARITH.SPIRAL
VOLUTE EXIT AREA = 144.00 SQ. IN.

IMPELLER OUTSIDE DIAMETER (INCHES)	12.000
IMPELLER WIDTH FACTOR (SINGLE WIDTH FAN)	0.216
IMPELLER INSIDE DIAMETER (INCHES)	7.982
IMPELLER EXIT BLADE ANGLE (DEGREES)	61.500
NOZZLE DIAMETER (INCHES)	6.994
INCLINATION OF MANOMETER BANKS (DEGREES)	11.533
INCLINATION OF DIFF. MAN. (DEGREES)	11.533
TORQUE ARM LENGTH (INCHES)	10.000
DUCT AREA TO CHAMBER (SQFT)	1.000
DUCT AREA UPSTREAM OF NOZZLE (SQFT)	15.500

BAROMETER HEIGHT (INCHES OF MERCURY)	29.290
AMBIENT AIR TEMPERATURE (DEGREES F)	55.500
WET BULB TEMPERATURE (DEGREES F)	52.000
WATER DENSITY (LBS/CUFT)	62.389
AMBIENT AIR DENSITY (LBS/CUFT)	0.07504

FAN SPEED = 2500 RPM
****

PHI	FHI	PSI TOTAL	PSI STATIC	ETA TOTAL	ETA STATIC	FLOW CFM	PRESS TOTAL IN WG	PRESS STATIC IN WG	POWER HP	NF
0.0	0.0	0.4109	0.4109	0.0	0.0	0.0	3.159	3.159	0.214	0.033
0.0859	0.0742	0.4459	0.4442	0.4331	0.4314	458.0	3.428	3.415	0.571	0.088
0.1364	0.1196	0.4331	0.4286	0.5330	0.5274	737.5	3.330	3.295	0.726	0.112
0.1750	0.1512	0.4174	0.4104	0.5745	0.5645	932.6	3.210	3.155	0.821	0.127
0.2102	0.1816	0.4031	0.3927	0.6075	0.5918	1120.4	3.099	3.019	0.900	0.139
0.2448	0.2115	0.3876	0.3735	0.6379	0.6147	1304.5	2.979	2.871	0.960	0.149
0.2756	0.2381	0.3628	0.3449	0.6560	0.6237	1466.9	2.789	2.651	0.984	0.152
0.2959	0.2556	0.3369	0.3162	0.6437	0.6042	1576.9	2.590	2.431	1.000	0.155
0.3161	0.2731	0.3083	0.2848	0.6268	0.5789	1684.5	2.370	2.189	1.004	0.155
0.3312	0.2893	0.2792	0.2526	0.5920	0.5359	1784.5	2.147	1.943	1.019	0.158
0.3900	0.3369	0.1562	0.1202	0.3949	0.3030	2078.4	1.201	0.924	0.996	0.154

*See figure 50.

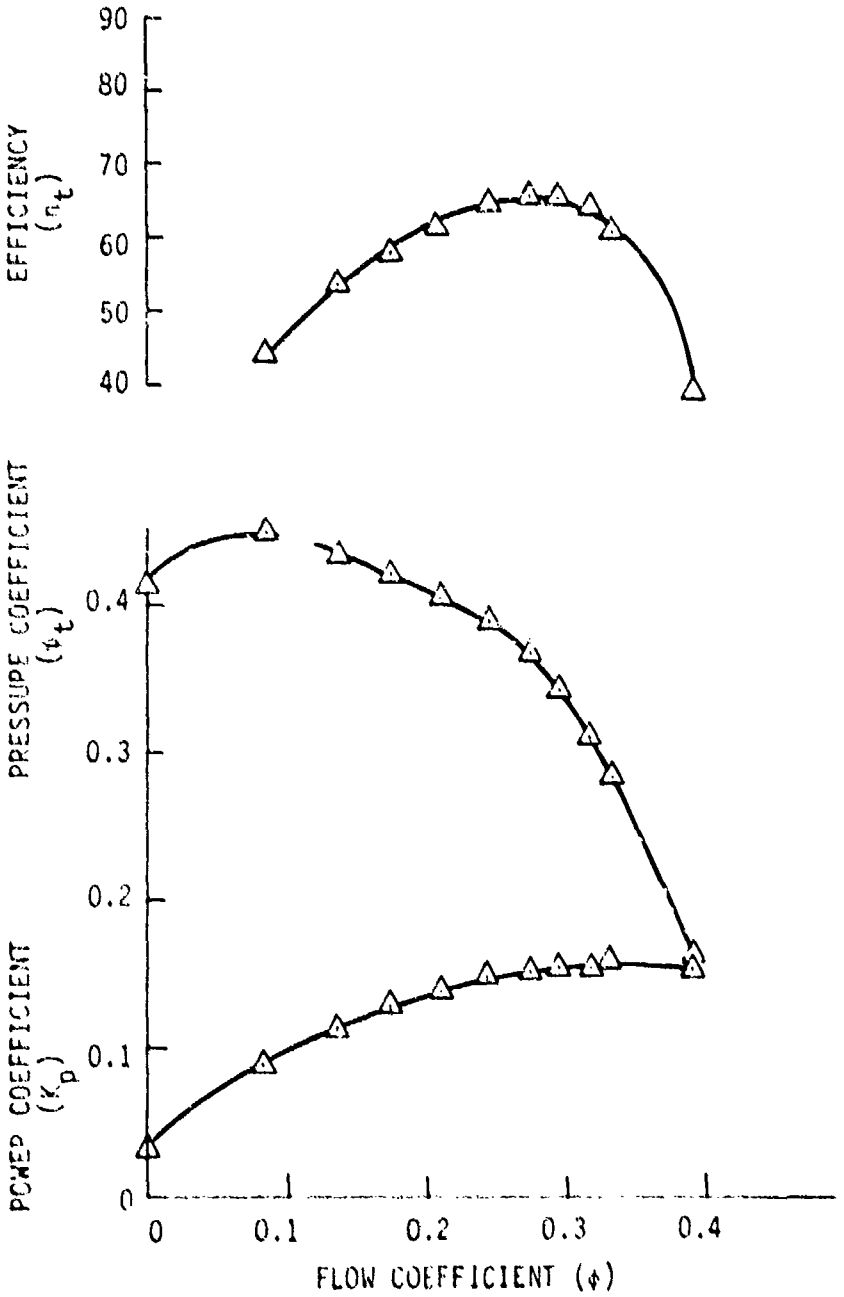

Figure 50 CONFIGURATION 3 PERFORMANCE, 2500 RPM

TABLE 13. FAN SPEED 3000 RPM, CONFIGURATION 3*

CENTRIFUGAL FAN TEST DATA REDUCTION PROGRAM
****

(AMCA STANDARD 210-67, FIGURE 4.3)

VOLUTE TYPE - ARITH.SPIRAL
VOLUTE EXIT AREA = 144.00 SQ. IN.

IMPELLER OUTSIDE DIAMETER (INCHES)	12.000
IMPELLER WIDTH FACTOR (SINGLE WIDTH FAN)	0.217
IMPELLER INSIDE DIAMETER (INCHES)	7.982
IMPELLER EXIT BLADE ANGLE (DEGREES)	61.500
NOZZLE DIAMETER (INCHES)	6.994
INCLINATION OF MANOMETER BANKS (DEGREES)	11.533
INCLINATION OF DIFF. MAN. (DEGREES)	11.533
TORQUE ARM LENGTH (INCHES)	10.000
DUCT AREA TO CHAMBER (SQFT)	1.000
DUCT AREA UPSTREAM OF NOZZLE (SQFT)	15.500

BAROMETER HEIGHT (INCHES OF MERCURY)	29.390
AMBIENT AIR TEMPERATURE (DEGREES F)	58.500
WET BULB TEMPERATURE (DEGREES F)	55.000
WATER DENSITY (LBS/CUFT)	62.374
AMBIENT AIR DENSITY (LBS/CUFT)	0.07481

FAN SPEED = 3000 RPM
****

PHI	FHI	PSI TOTAL	PSI STATIC	ETA TOTAL	ETA STATIC	FLOW CFM	PRESS TOTAL IN WG	PRESS STATIC IN WG	POWER HP	NP
0.0	0.0	0.4111	0.4111	0.0	0.0	0.0	4.538	4.538	0.362	0.032
0.0856	0.0745	0.4476	0.4459	0.4377	0.4360	551.5	4.942	4.922	0.981	0.088
0.1302	0.1202	0.4372	0.4327	0.5509	0.5452	890.0	4.827	4.776	1.228	0.110
0.1731	0.1506	0.4186	0.4115	0.5879	0.5779	1114.9	4.621	4.542	1.380	0.123
0.2112	0.1837	0.4113	0.4006	0.6345	0.6180	1359.9	4.540	4.422	1.533	0.137
0.2442	0.2124	0.3891	0.3749	0.6593	0.6352	1572.5	4.296	4.139	1.614	0.144
0.2717	0.2363	0.3648	0.3472	0.6661	0.6339	1749.5	4.027	3.833	1.666	0.149
0.2914	0.2553	0.3379	0.3173	0.6497	0.6101	1889.6	3.730	3.503	1.709	0.153
0.3115	0.2710	0.3125	0.2892	0.6290	0.5822	2005.9	3.449	3.193	1.733	0.155
0.3319	0.2807	0.2803	0.2539	0.5915	0.5357	2137.1	3.095	2.803	1.761	0.157
0.3896	0.3389	0.1567	0.1203	0.3936	0.3020	2508.9	1.730	1.328	1.737	0.155

*See figure 51.

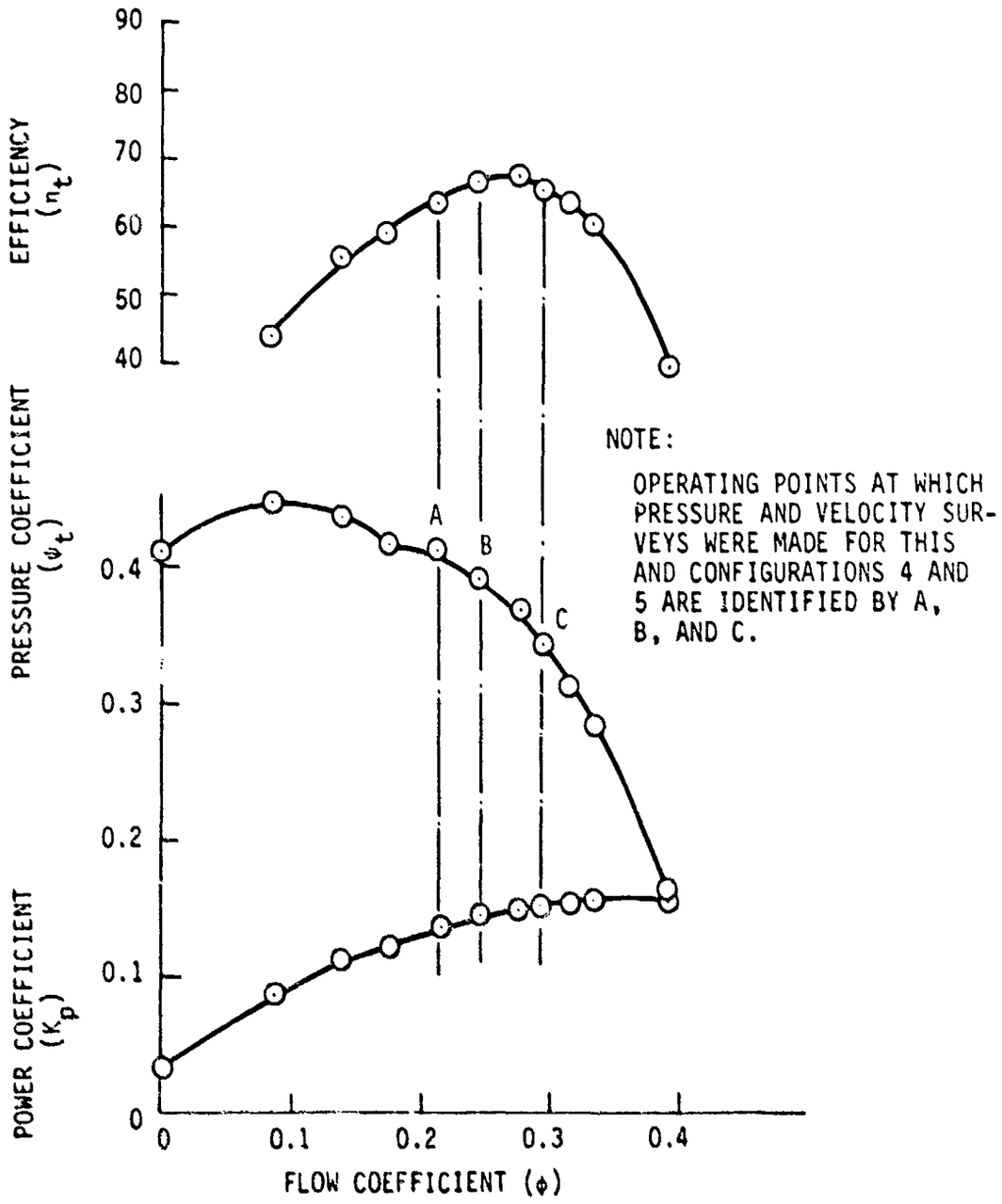

Figure 51 CONFIGURATION 3 PERFORMANCE, 3000 RPM

TABLE 14. FAN SPEED 3500 RPM, CONFIGURATION 3*

CENTRIFUGAL FAN TEST DATA REDUCTION PROGRAM
****

(AMCA STANDARD 210-67, FIGURE 4.3)

VOLUTE TYPE - ARITH.SPIRAL
VOLUTE EXIT AREA = 144.00 SQ. IN.

IMPELLER OUTSIDE DIAMETER (INCHES)	12.000
IMPELLER WIDTH FACTOR (SINGLE WIDTH FAN)	0.216
IMPELLER INSIDE DIAMETER (INCHES)	7.982
IMPELLER EXIT BLADE ANGLE (DEGREES)	61.500
NOZZLE DIAMETER (INCHES)	6.994
INCLINATION OF MANOMETER BANKS (DEGREES)	11.533
INCLINATION OF DIFF. MAN. (DEGREES)	11.533
TORQUE ARM LENGTH (INCHES)	10.000
DUCT AREA TO CHAMBER (SQFT)	1.000
DUCT AREA UPSTREAM OF NOZZLE (SQFT)	15.500
BAROMETER HEIGHT (INCHES OF MERCURY)	29.290
AMBIENT AIR TEMPERATURE (DEGREES F)	56.500
WET BULB TEMPERATURE (DEGREES F)	53.000
WATER DENSITY (LBS/CUFT)	62.384
AMBIENT AIR DENSITY (LBS/CUFT)	0.07488

FAN SPEED = 3500 RPM
****

PHI	FHI	PSI TOTAL	PSI STATIC	ETA TOTAL	ETA STATIC	FLOW CFM	PRESS TOTAL IN WG	PRESS STATIC IN WG	POWER HP	NF
0.0	0.0	0.4129	0.4129	0.0	0.0	0.0	6.208	6.208	0.594	0.034
0.0857	0.0740	0.4487	0.4470	0.5228	0.5208	639.2	6.747	6.722	1.299	0.074
0.1382	0.1194	0.4369	0.4324	0.5381	0.5326	1030.9	6.569	6.502	1.983	0.112
0.1742	0.1505	0.4204	0.4133	0.5753	0.5656	1299.4	6.321	6.214	2.249	0.127
0.2105	0.1819	0.4116	0.4012	0.6266	0.6107	1570.5	6.188	6.032	2.443	0.138
0.2429	0.2098	0.3886	0.3747	0.6459	0.6228	1812.0	5.843	5.634	2.582	0.146
0.2724	0.2353	0.3613	0.3438	0.6445	0.6133	2032.3	5.433	5.170	2.699	0.153
0.2943	0.2543	0.3342	0.3138	0.6388	0.5998	2195.9	5.025	4.718	2.721	0.154
0.3123	0.2698	0.3073	0.2843	0.6156	0.5696	2329.9	4.620	4.274	2.754	0.156
0.3330	0.2877	0.2795	0.2533	0.5899	0.5347	2484.5	4.202	3.809	2.788	0.158
0.3917	0.3384	0.1564	0.1201	0.3948	0.3030	2922.5	2.352	1.805	2.743	0.155

*See figure 52.

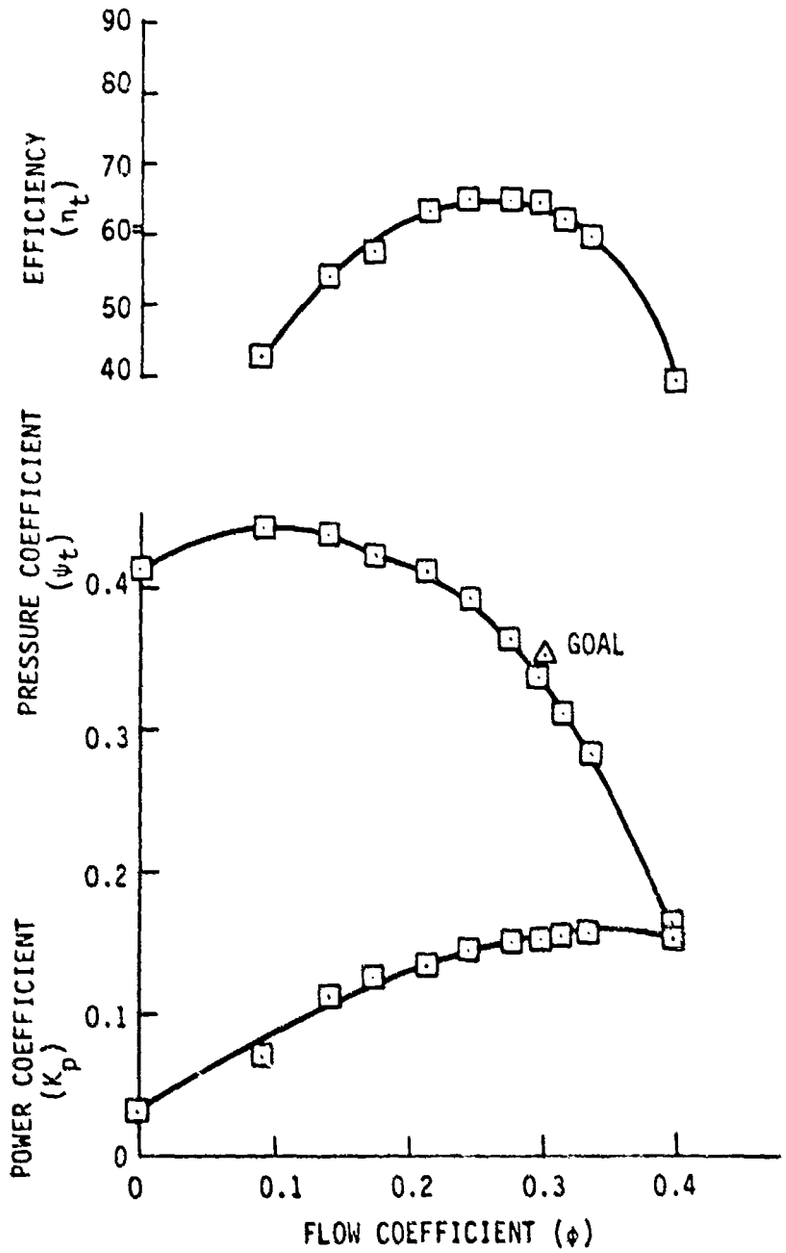

Figure 52 CONFIGURATION 3 PERFORMANCE, 3500 RPM

to the conditions at the box inlet. In accordance with the AMCA Standard (reference 1) recommendation, a very small total pressure correction for the length of the duct to the box beyond the end of the normal diffuser was included as appropriate. However, the absence of this correction has negligible effect on the results.

CONFIGURATION 3

Figures 53 through 79 illustrate test results for the final Bell compact volute, as described below.

Figures 53 through 55 show the results of the inlet bellmouth velocity surveys at three operating points.

Figure 56 shows the volute exit plane pressure measurement locations, and figures 57 through 60 show the results of the volute exit plane surveys at these locations for four operating points.

Figures 61 through 63 show the impeller blade inlet flow angle survey results at three operating points, and figures 64 through 66 show the impeller blade velocity survey results at the same three operating points. Figures 67 through 69 show the results of the impeller blade inlet pressure surveys at three operating points, and figures 70 through 72 show the impeller blade exit flow angle survey results at these three operating points. Figures 73 through 75 show the impeller blade exit pressure survey results for the three operating points.

Figure 76 is a diagram showing the locations within the volute at which pressure readings were taken. Figure 77 shows plots of these pressure readings as a function of actual and radial positions.

Figure 78 shows the results of a longitudinal pressure survey through the inlet bellmouth at a radius of 2.6 inches from the impeller shaft axis. Figure 79 shows the corresponding velocity for this pressure survey.

FAN RPM: 3000
HOLES: 33

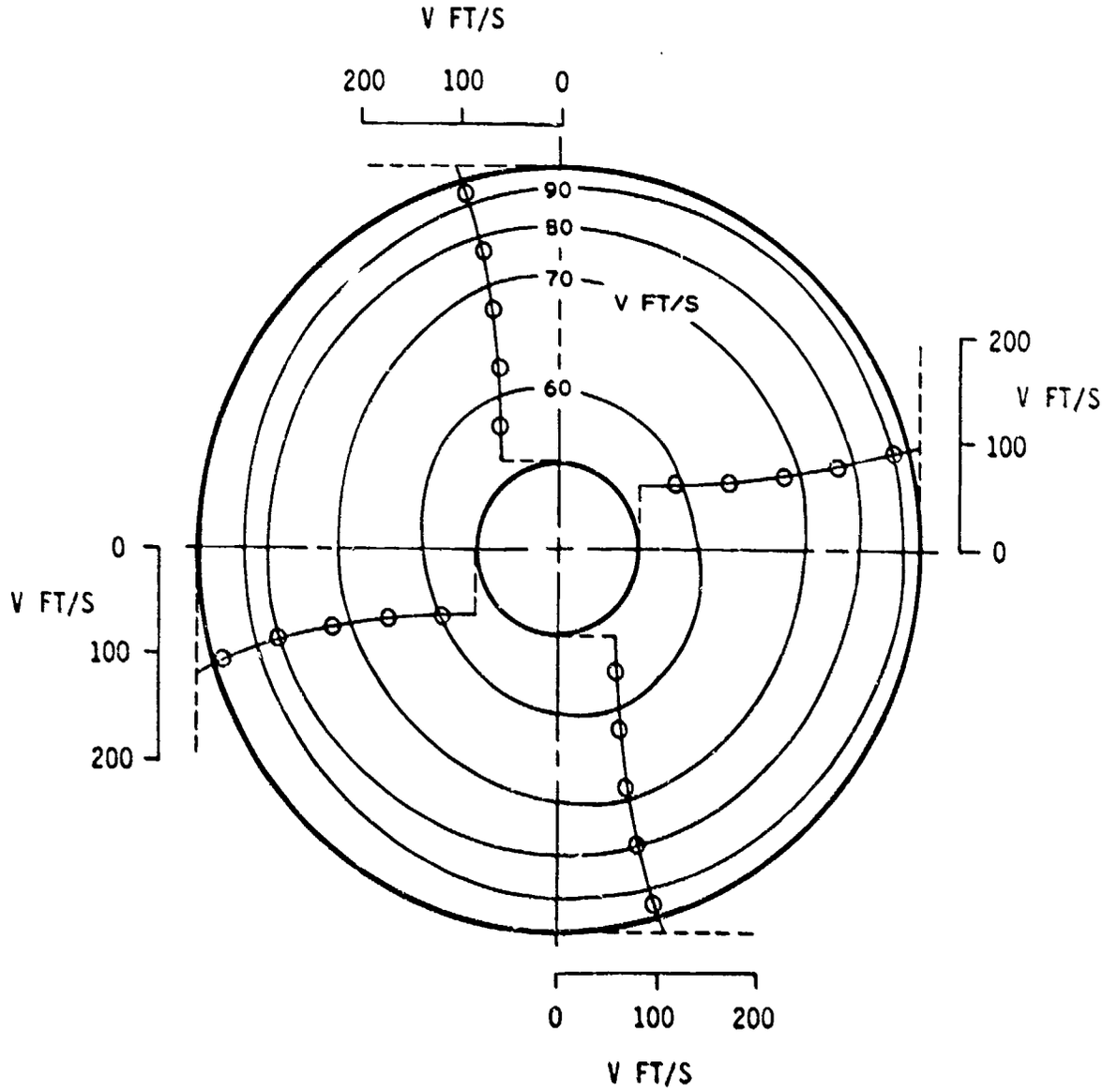

Figure 53 INLET BELLMOUTH VELOCITY SURVEY, OPERATING POINT A, CONFIGURATION 3

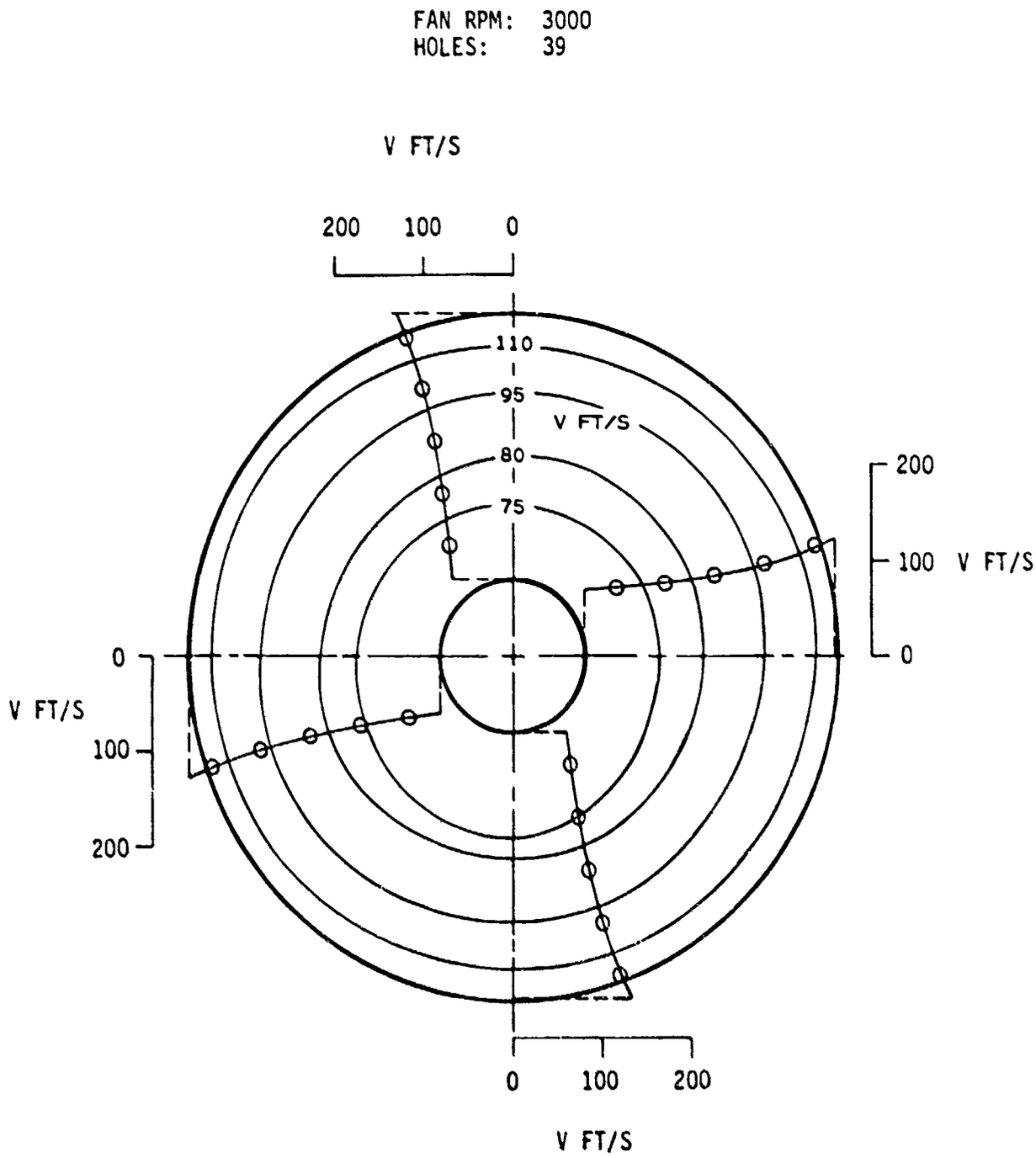

Figure 54 INLET BELLMOUTH VELOCITY SURVEY, OPERATING POINT B, CONFIGURATION 3

FAN RPM: 3000
HOLES: 50

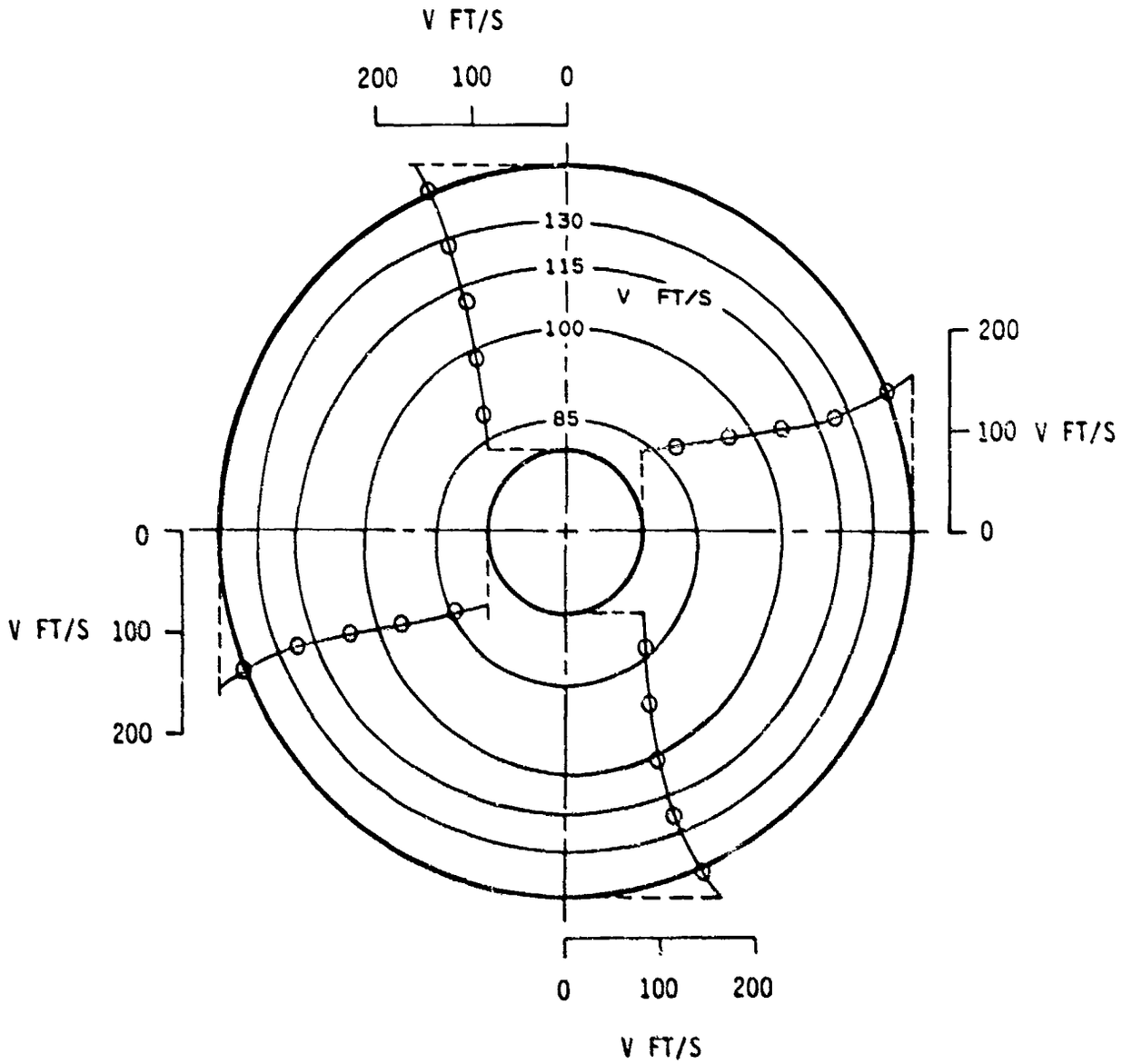

Figure 55 INLET BELLMOUTH VELOCITY SURVEY, OPERATING POINT C, CONFIGURATION 3

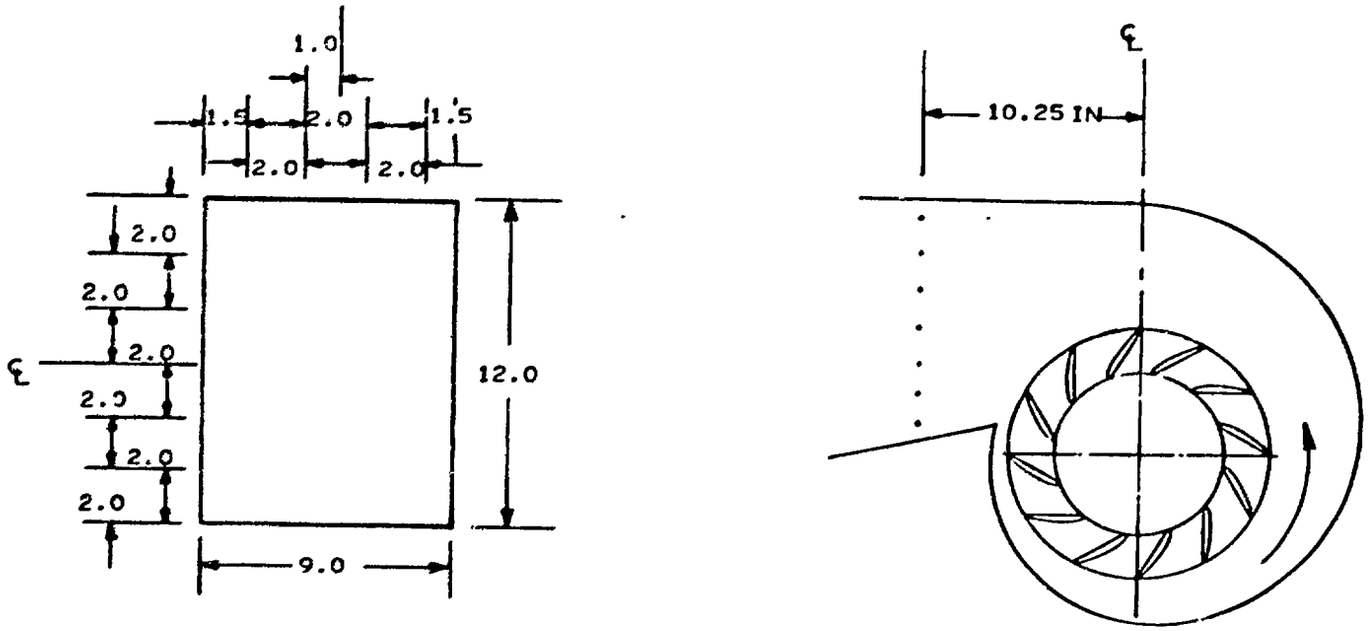

VOLUTE CONFIGURATION NO. 3

Figure 56 VOLUTE EXIT PLANE PRESSURE MEASUREMENT LOCATIONS, CONFIGURATION 3

FAN RPM: 3000

VIEW LOOKING INTO DIFFUSER FROM VOLUTE

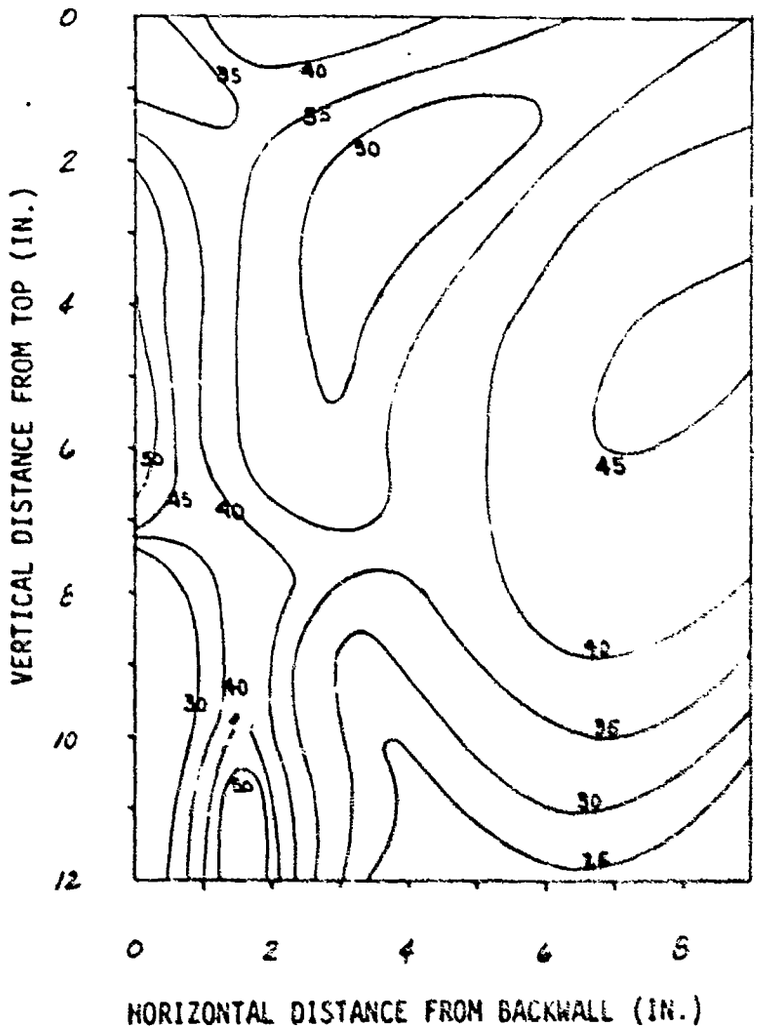

Figure 57 VOLUTE EXIT PLANE SURVEY, OPERATING POINT A, CONFIGURATION 3

FAN RPM: 3000

VIEW LOOKING INTO DIFFUSER FROM VOLUTE

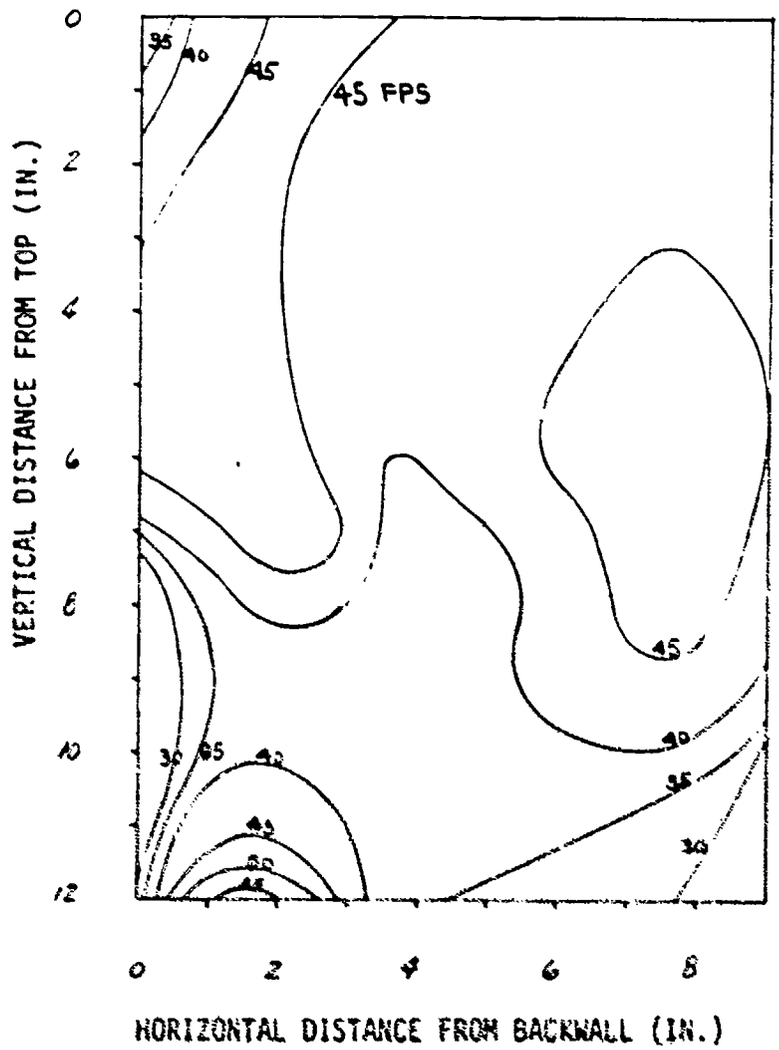

Figure 58 VOLUTE EXIT PLANE SURVEY, OPERATING POINT B, CONFIGURATION 3

FAN RPM: 3000

VIEW LOOKING INTO DIFFUSER FROM VOLUTE

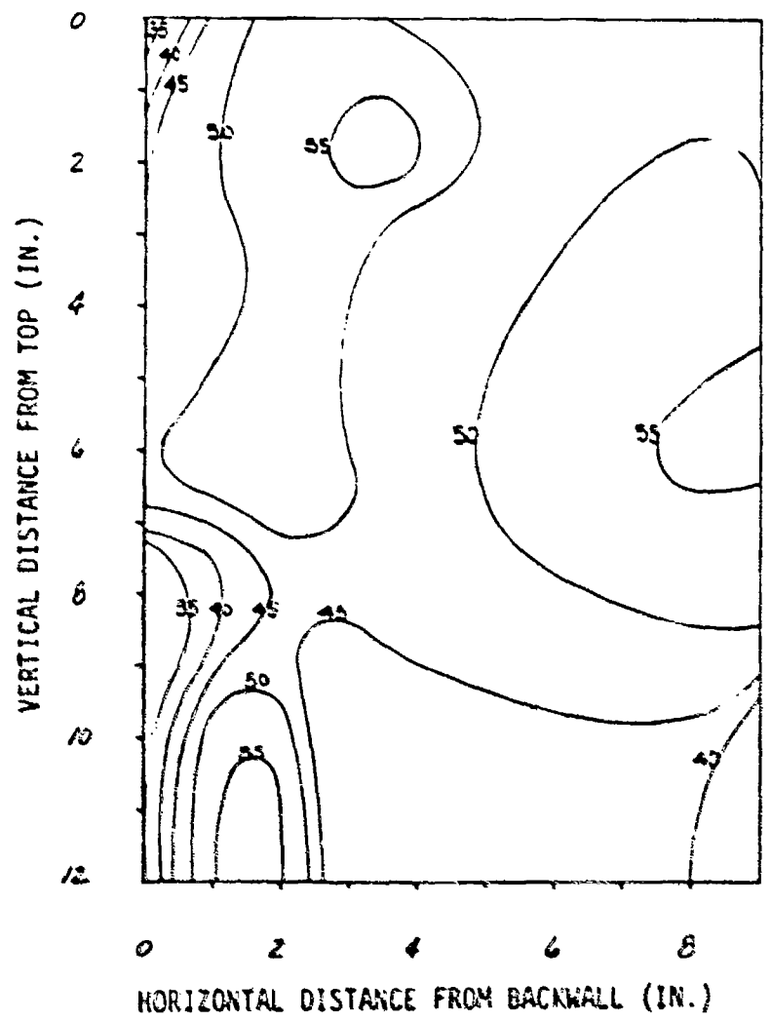

Figure 59 VOLUTE EXIT PLANE SURVEY, OPERATING POINT C, CONFIGURATION 3

FAN RPM: 2500

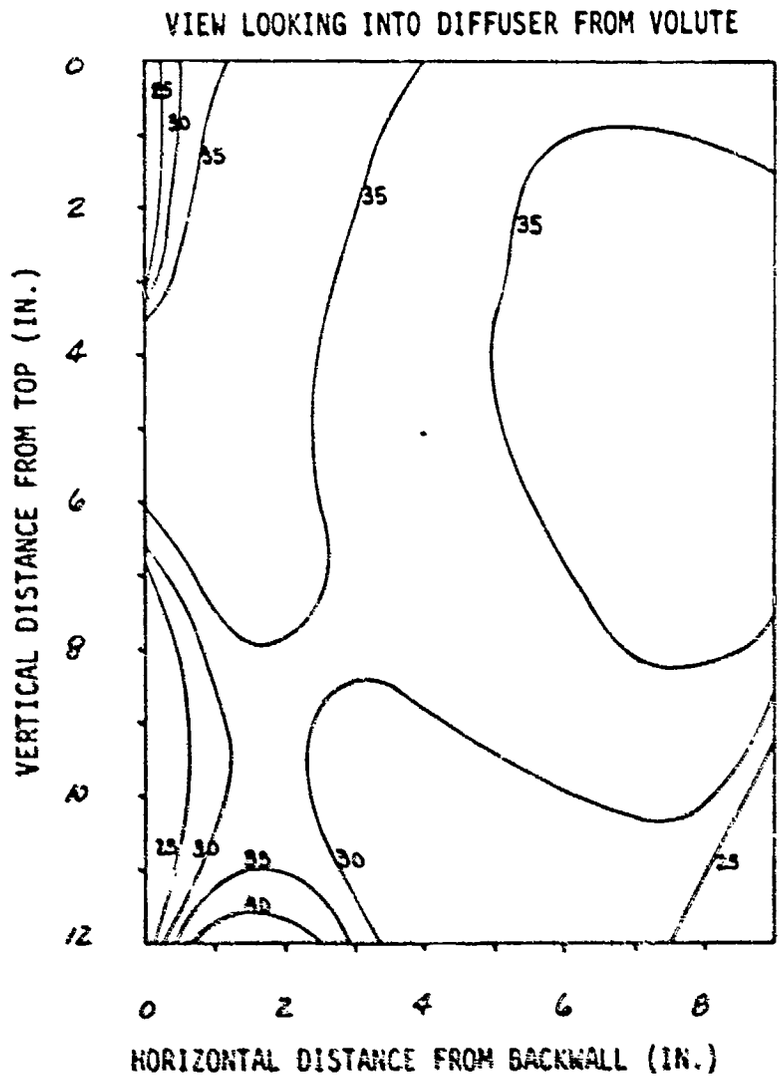

Figure 60 VOLUTE EXIT PLANE SURVEY, OPERATING POINT D, CONFIGURATION 3

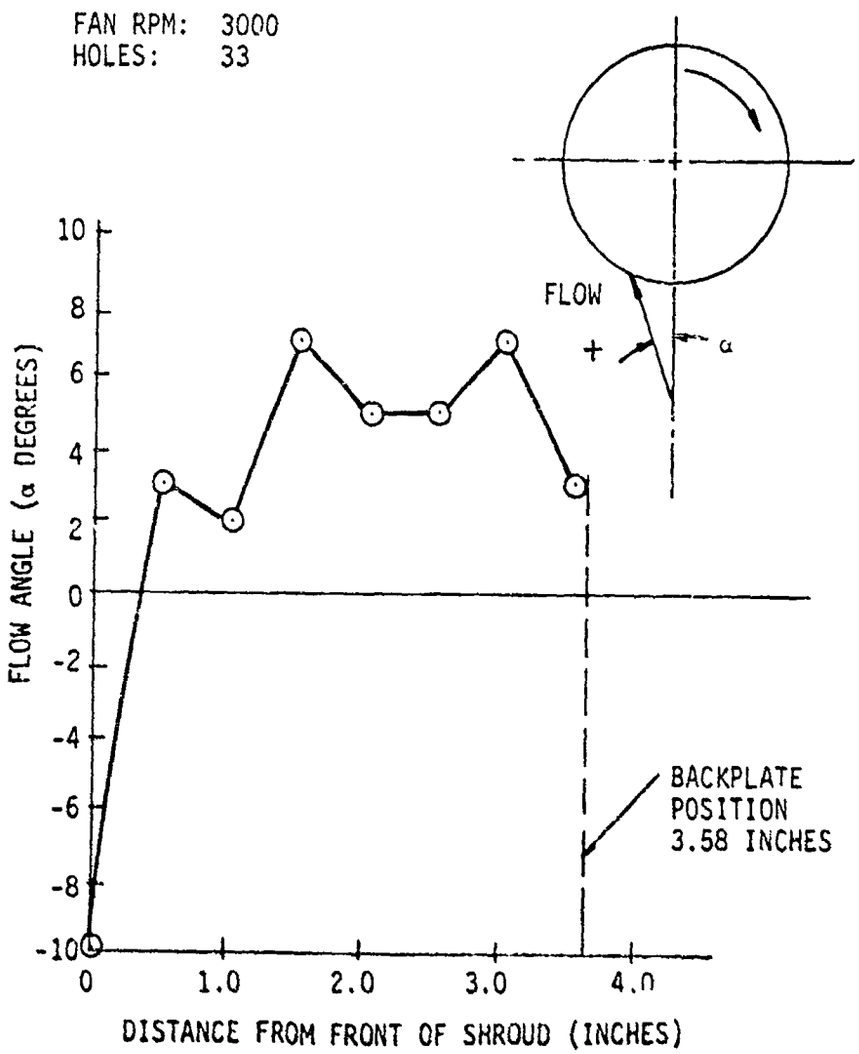

Figure 61 IMPELLER BLADE INLET FLOW ANGLE SURVEY, OPERATING POINT A, CONFIGURATION 3

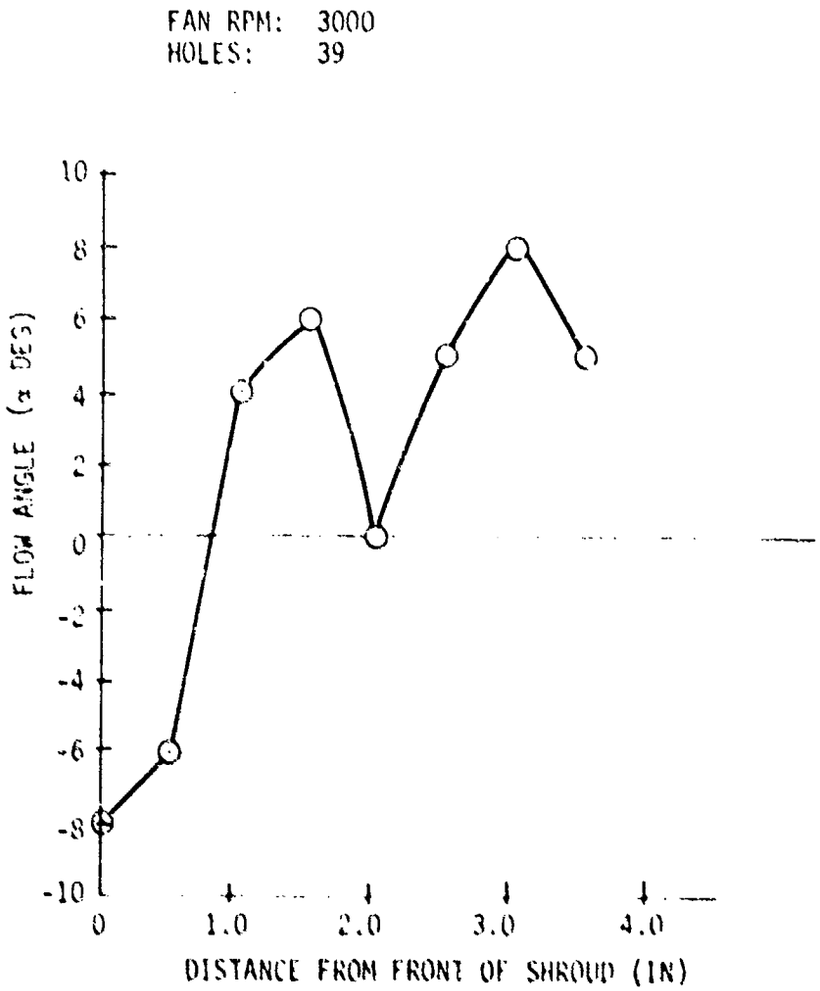

Figure 62 IMPELLER BLADE INLET FLOW ANGLE SURVEY, OPERATING POINT B, CONFIGURATION 3

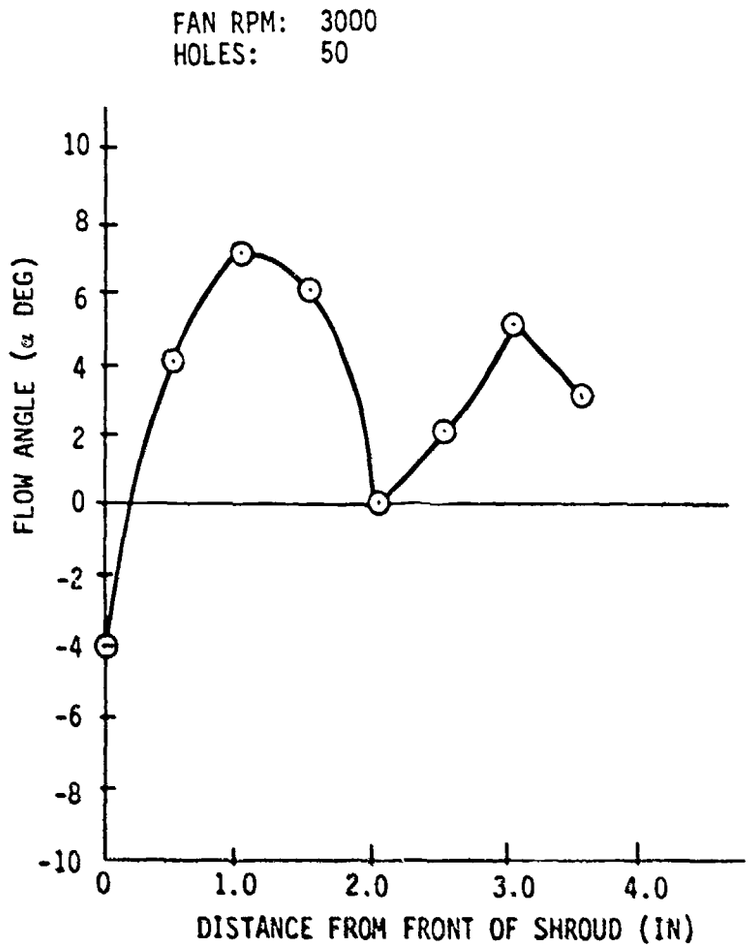

Figure 63 IMPELLER BLADE INLET FLOW ANGLE SURVEY, OPERATING POINT C, CONFIGURATION 3

Figure 64 IMPELLER BLADE VELOCITY SURVEY, OPERATING POINT A, CONFIGURATION 3

Figure 65 IMPELLER BLADE VELOCITY SURVEY, OPERATING POINT B, CONFIGURATION 3

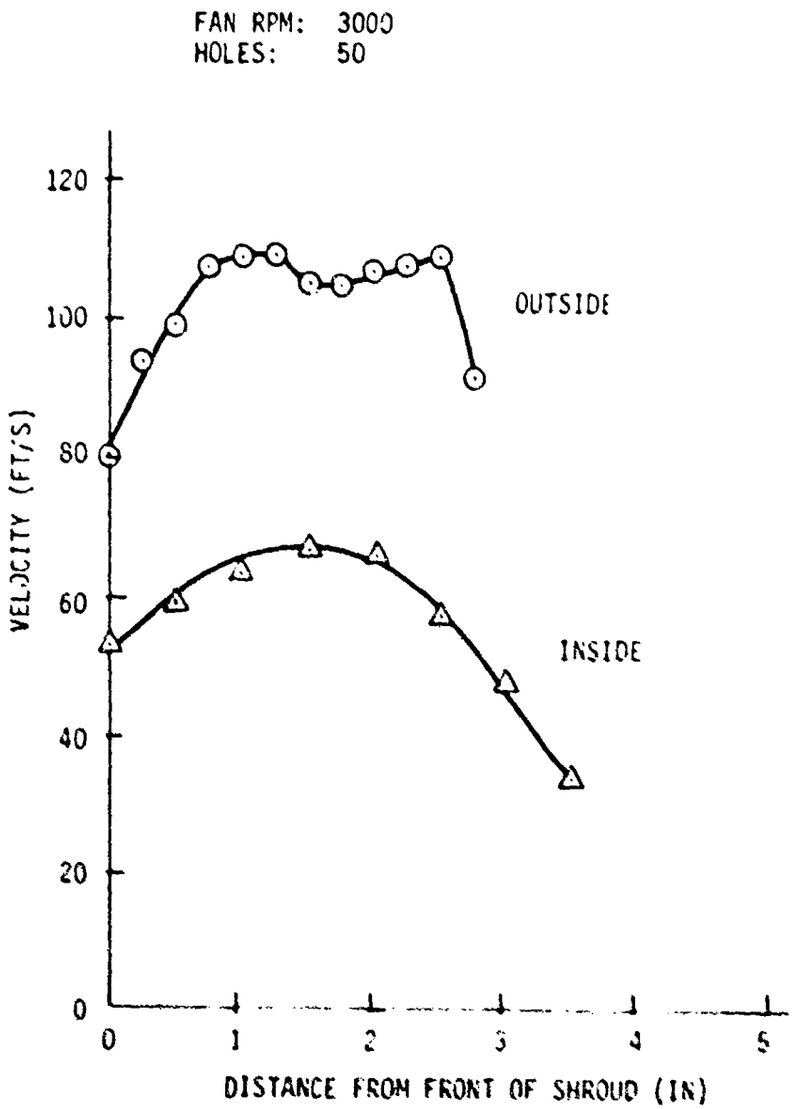

Figure 66 IMPELLER BLOW VELOCITY SURVEY, OPERATING POINT C, CONFIGURATION 3

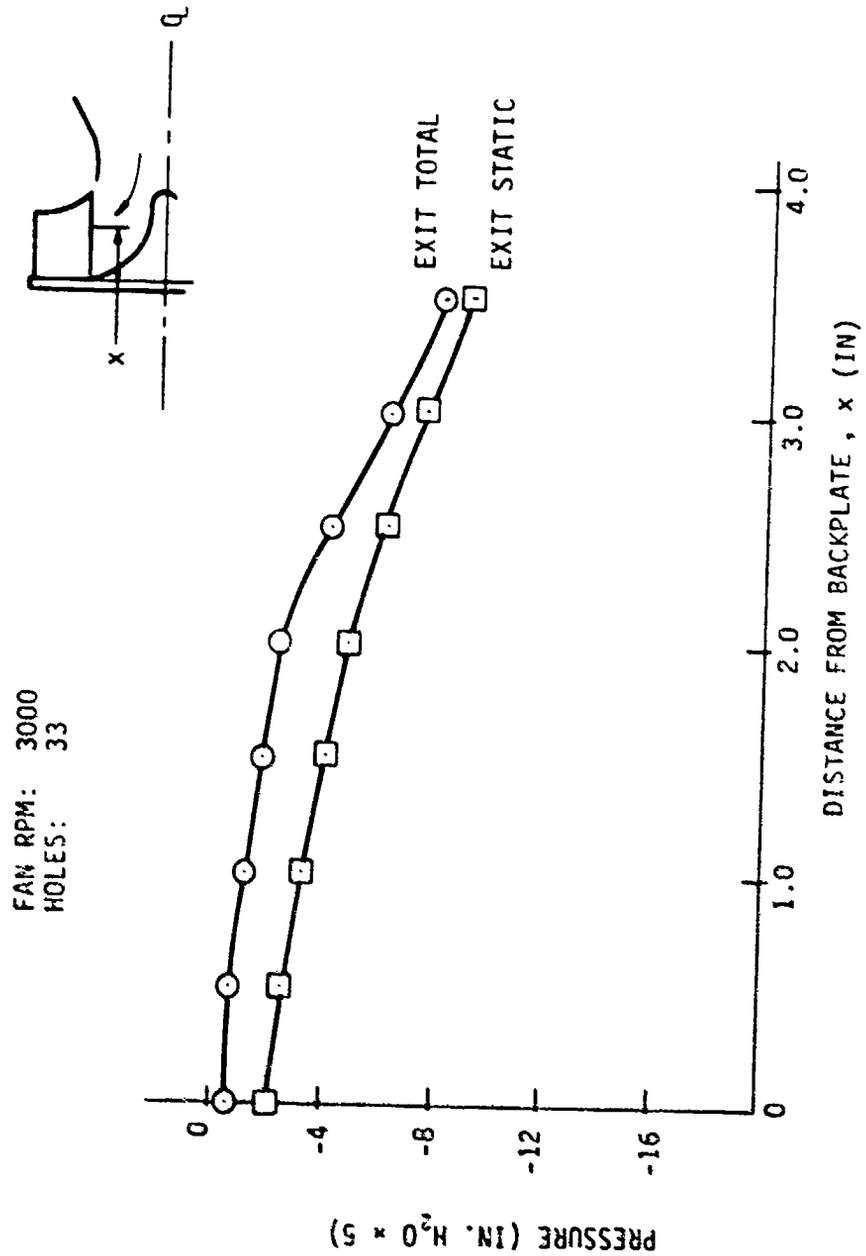

Figure 67 IMPELLER BLADE INLET PRESSURE SURVEY, OPERATING POINT A, CONFIGURATION 3

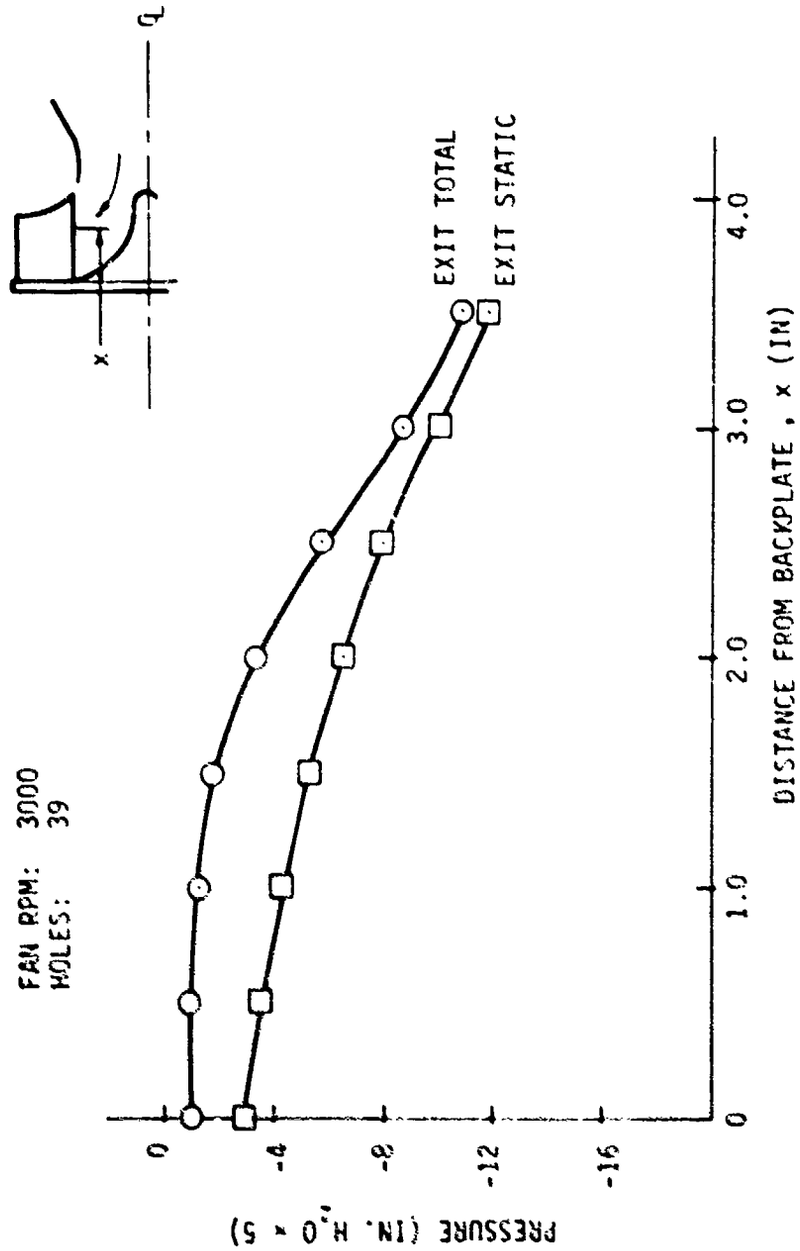

Figure 68 IMPELLER BLADE INLET PRESSURE SURVEY, OPERATING POINT B, CONFIGURATION 3

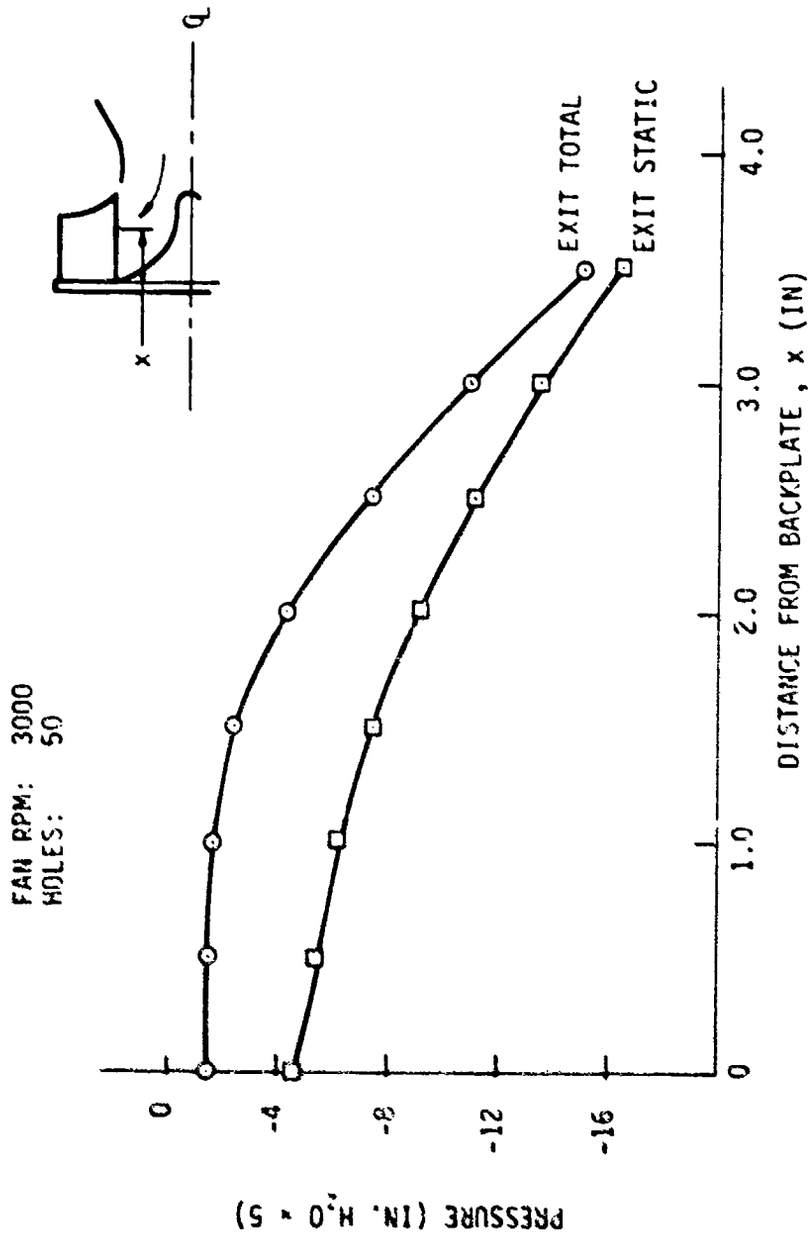

Figure 69 IMPELLER BLADE INLET PRESSURE SURVEY, OPERATING POINT C, CONFIGURATION 3

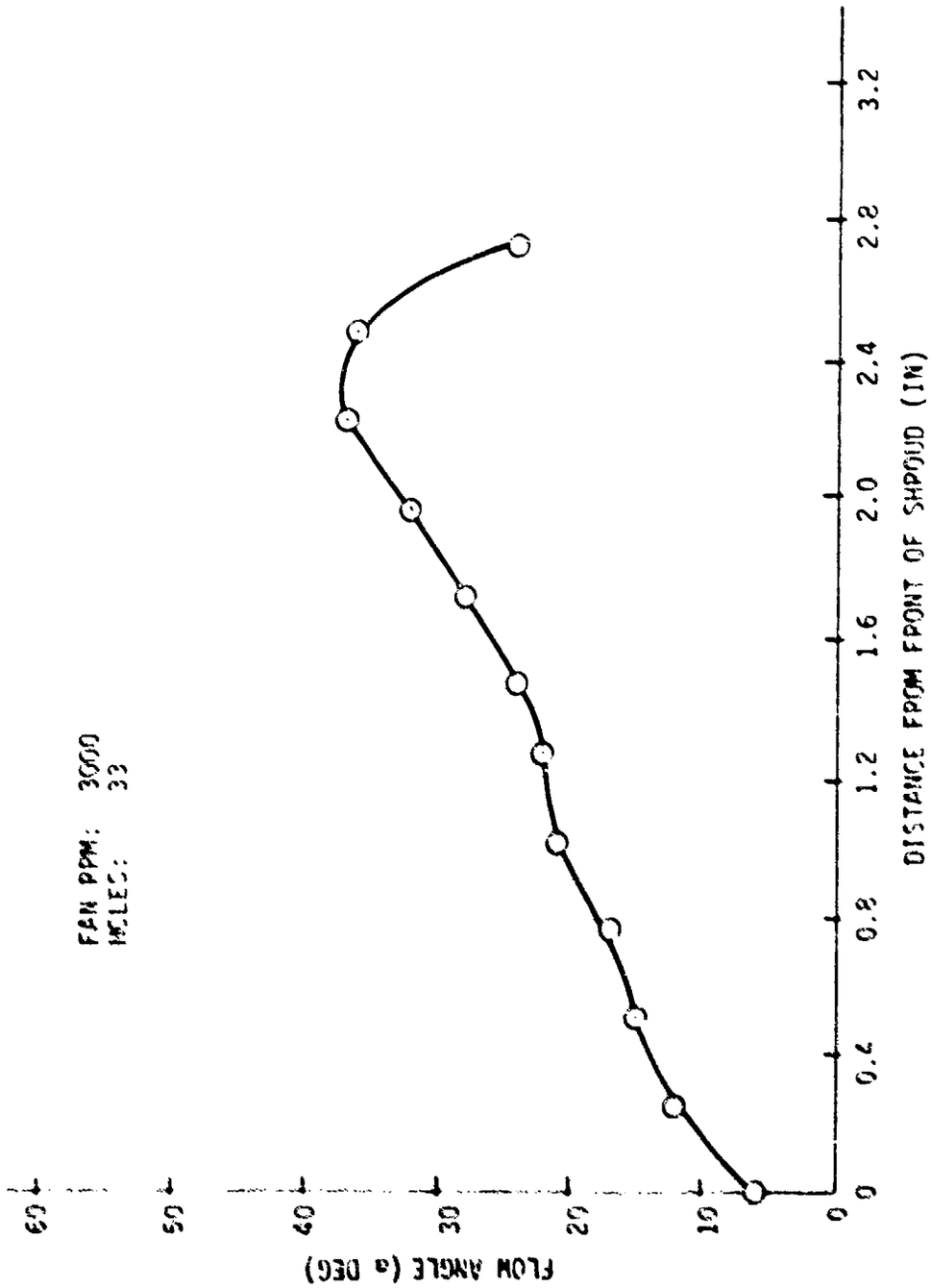

Figure 70 IMPELLER BLADE EXIT FLOW ANGLE SURVEY, OPERATING POINT A, CONFIGURATION 3

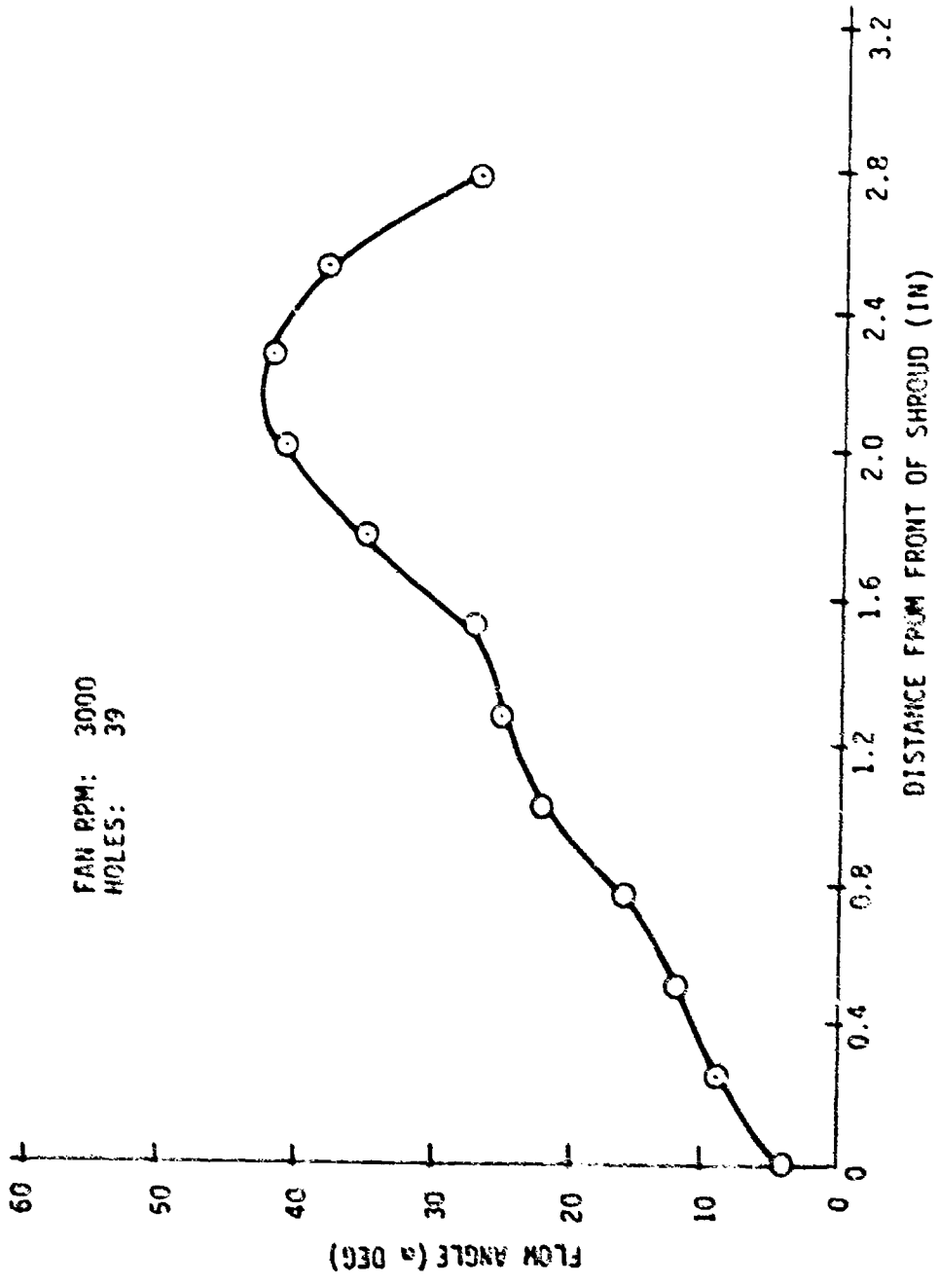

Figure 71 IMPELLER BLADE EXIT FLOW ANGLE SURVEY, OPERATING POINT B, CONFIGURATION 3

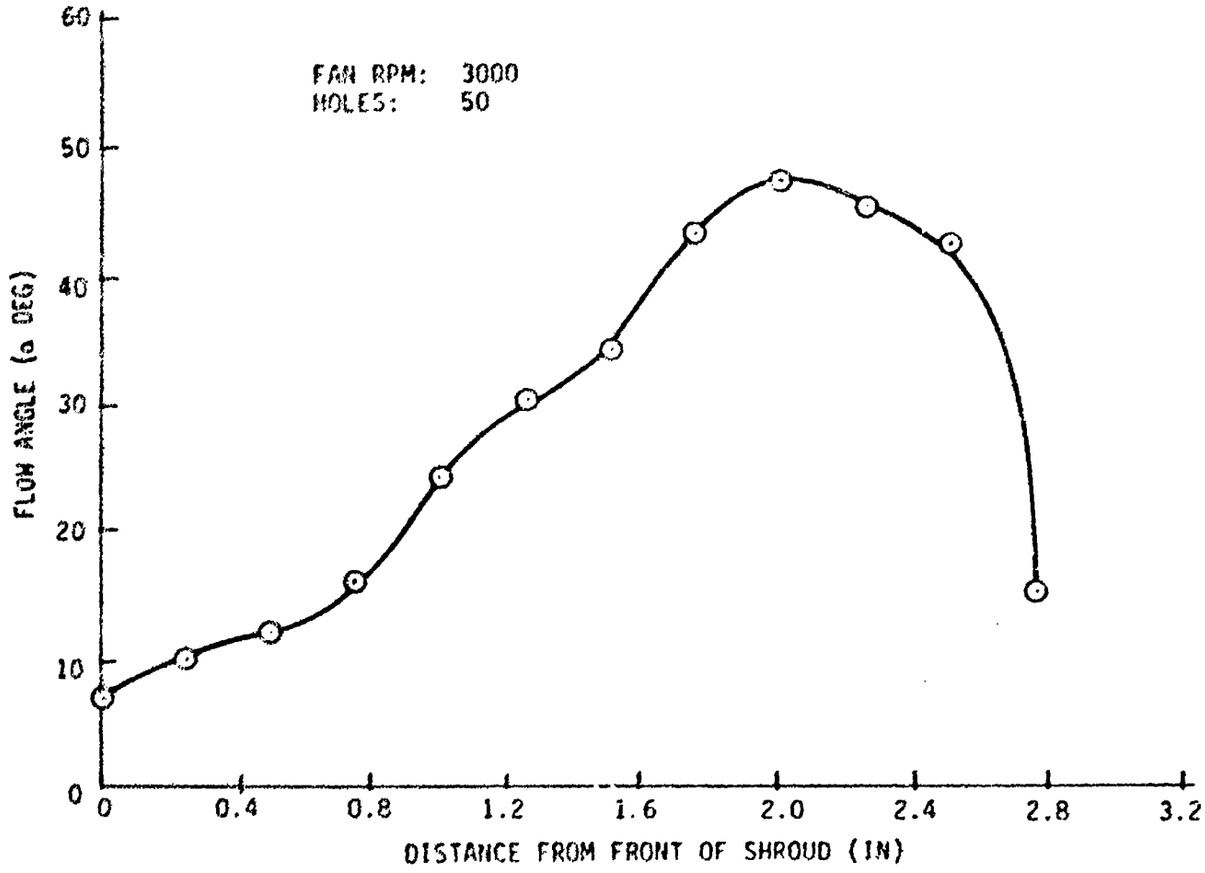

Figure 72 IMPELLER BLADE EXIT FLOW ANGLE SURVEY, OPERATING POINT C, CONFIGURATION 3

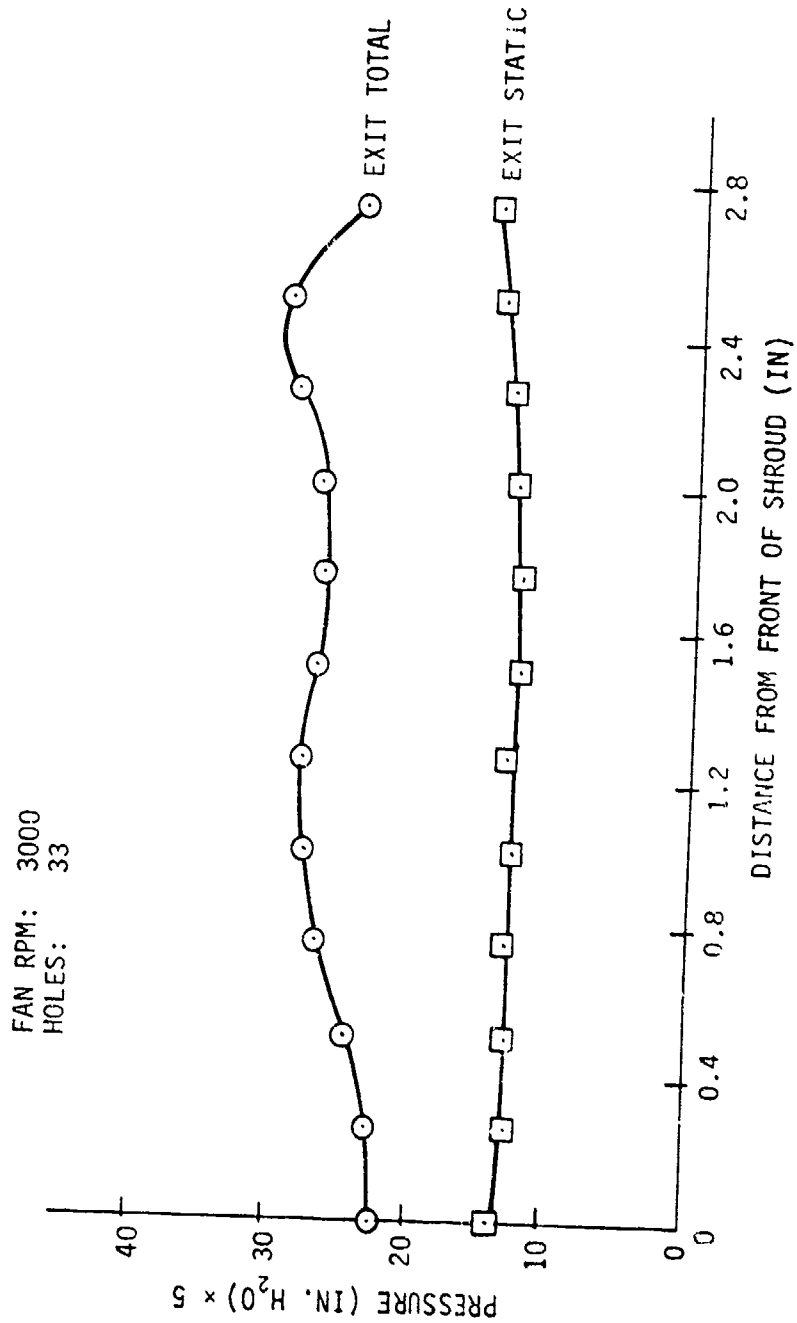

Figure 73 IMPELLER BLADE EXIT PRESSURE SURVEY, OPERATING POINT A, CONFIGURATION 3

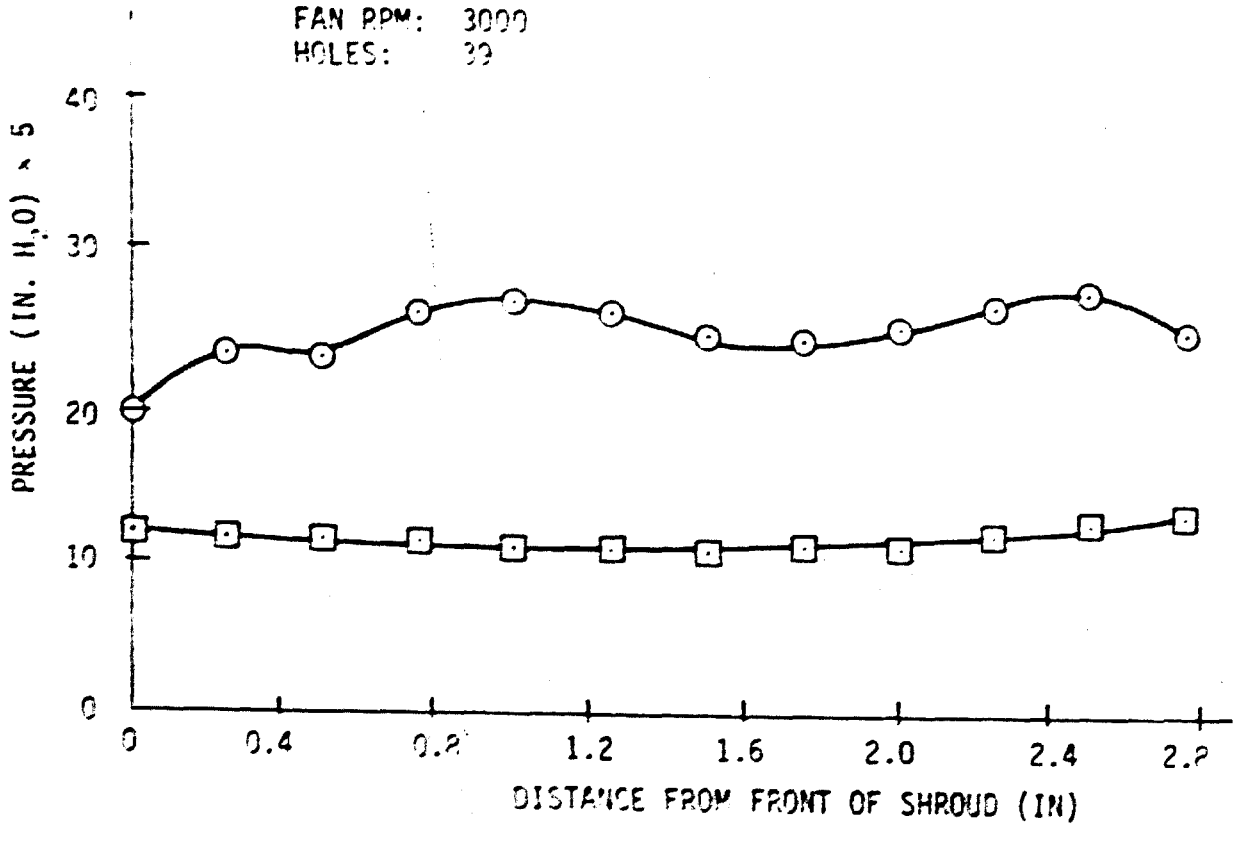

Figure 74 IMPELLER BLADE EXIT PRESSURE SURVEY, OPERATING POINT B, CONFIGURATION 3

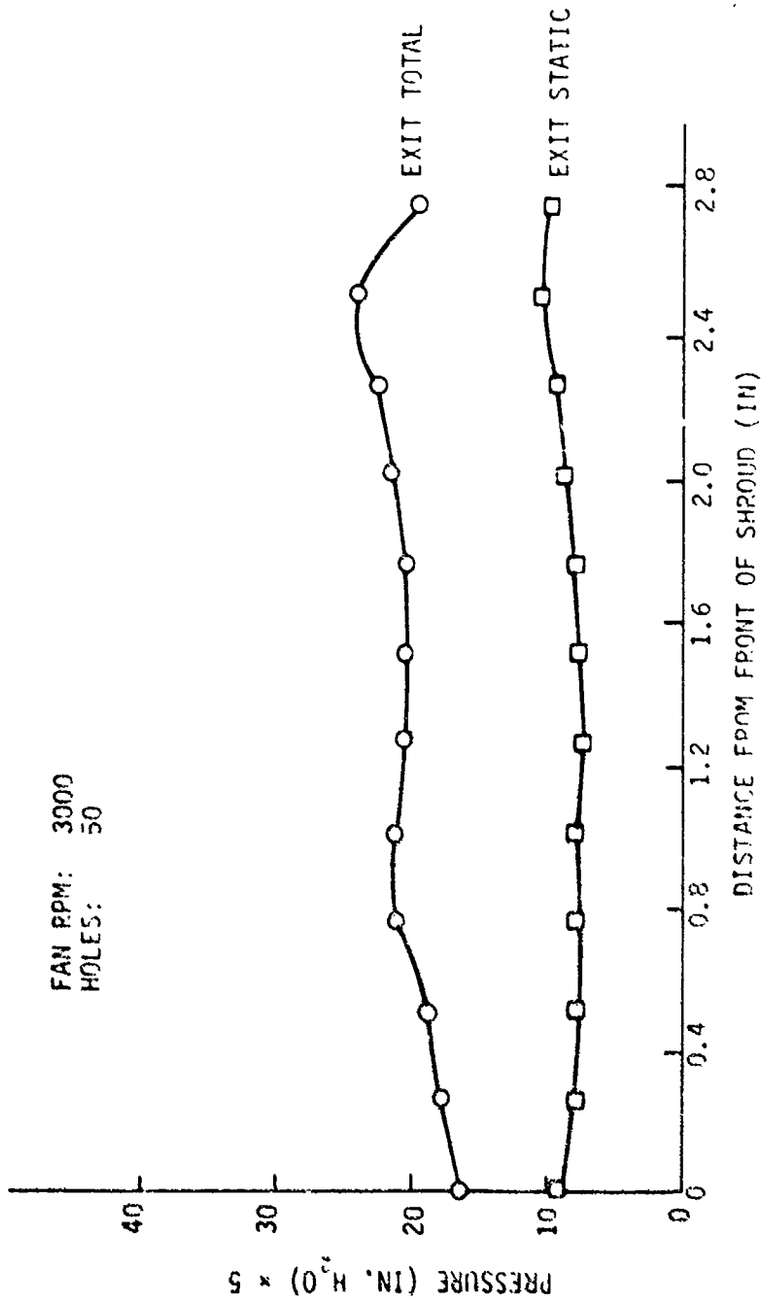

Figure 75 IMPELLER BLADE EXIT PRESSURE SURVEY, OPERATING POINT C, CONFIGURATION 3

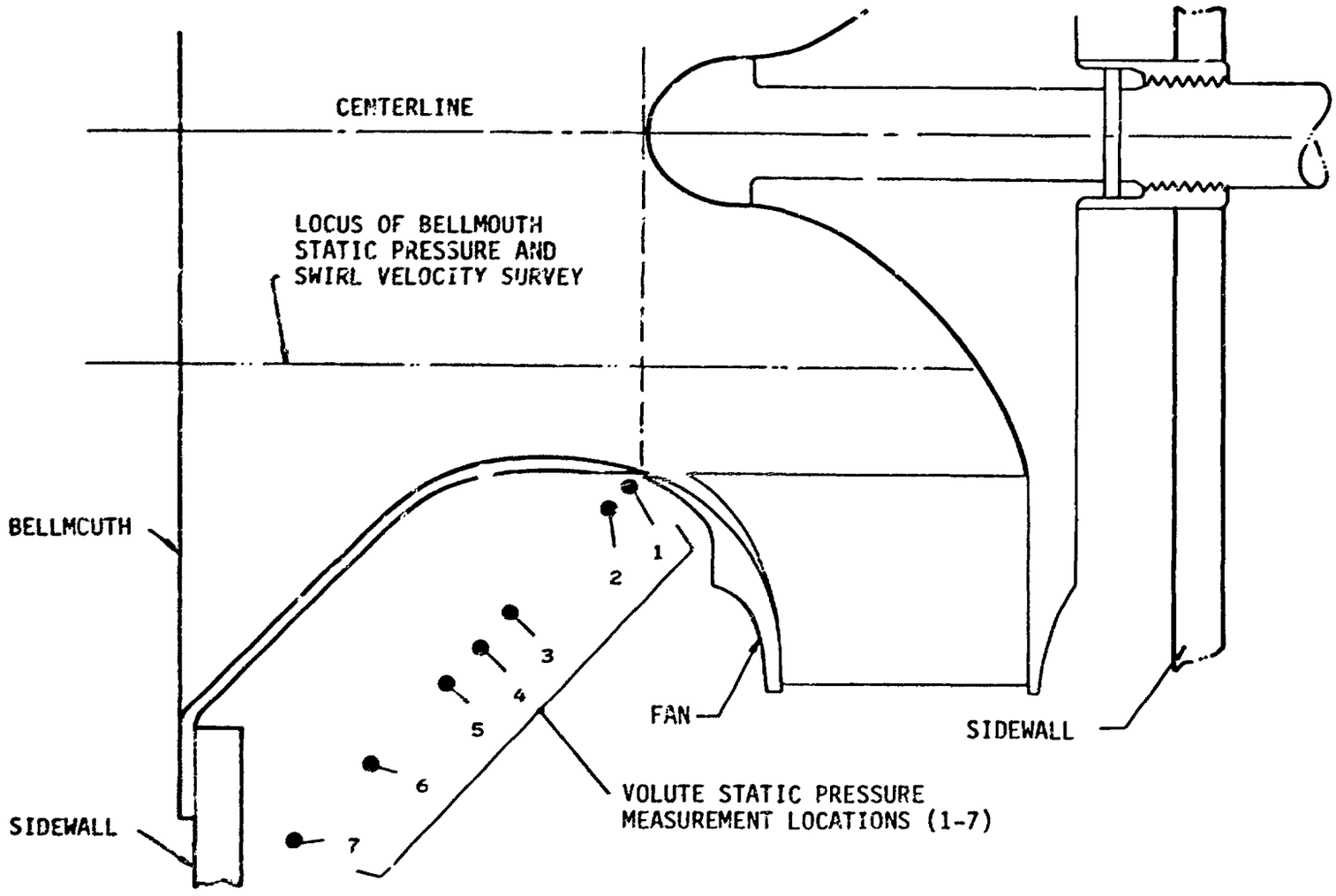

Figure 76 VOLUTE INTERNAL PRESSURE EXPLORATION DIAGRAM, CONFIGURATION 3

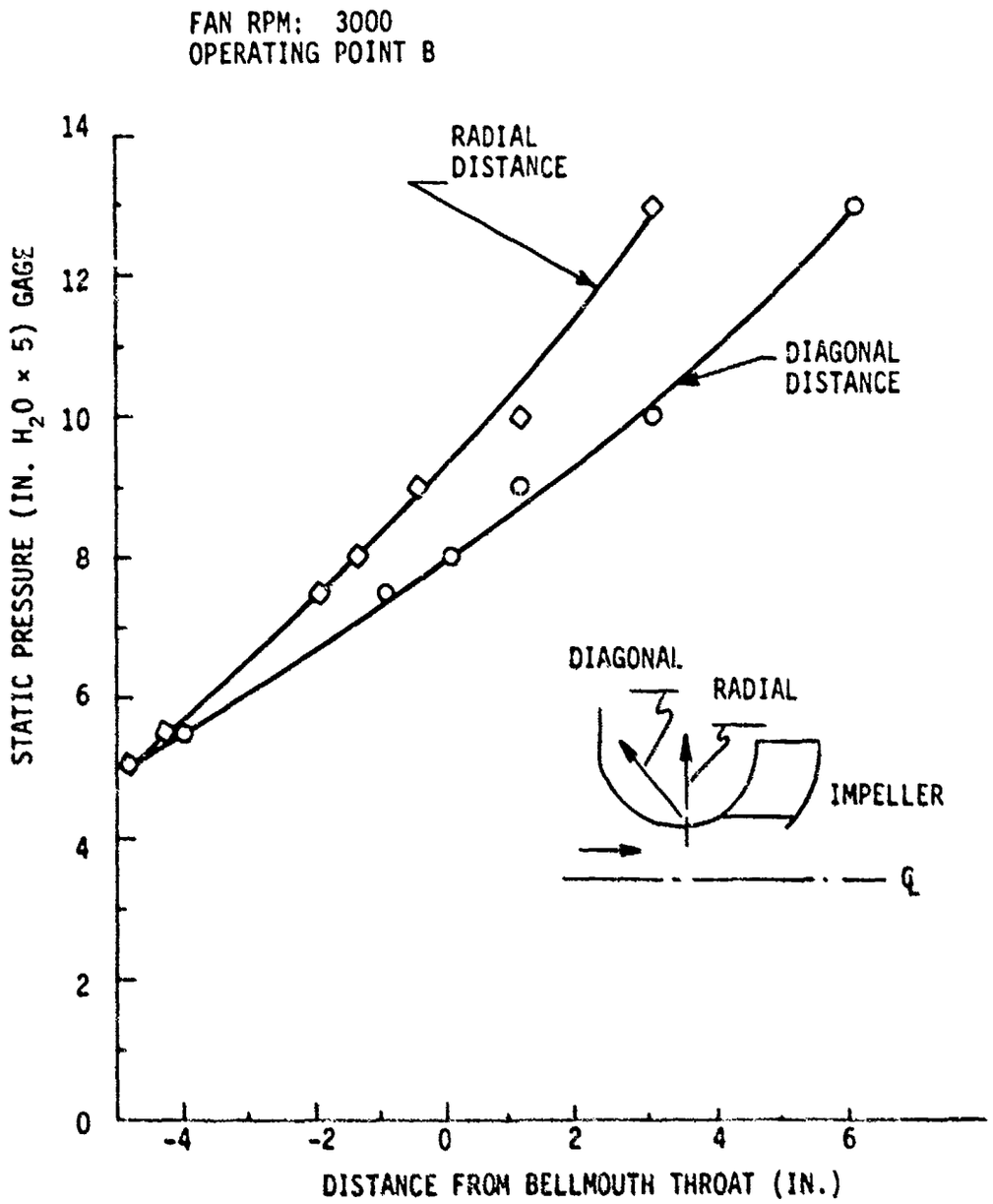

Figure 77 VOLUTE INTERNAL PRESSURE EXPLORATION RESULTS, CONFIGURATION 3

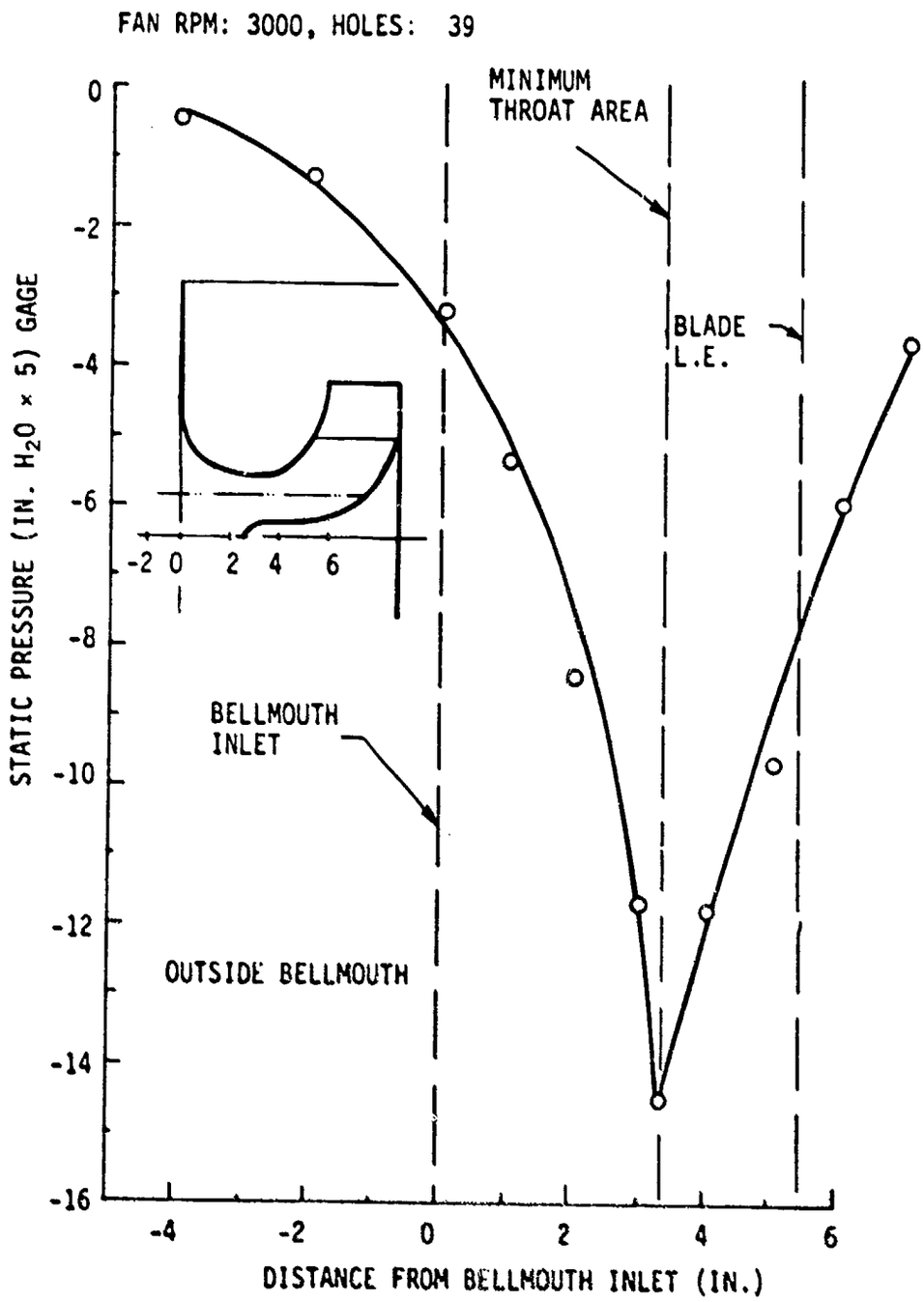

Figure 78 INLET BELLMOUTH LONGITUDINAL PRESSURE SURVEY, OPERATING POINT B, CONFIGURATION 3

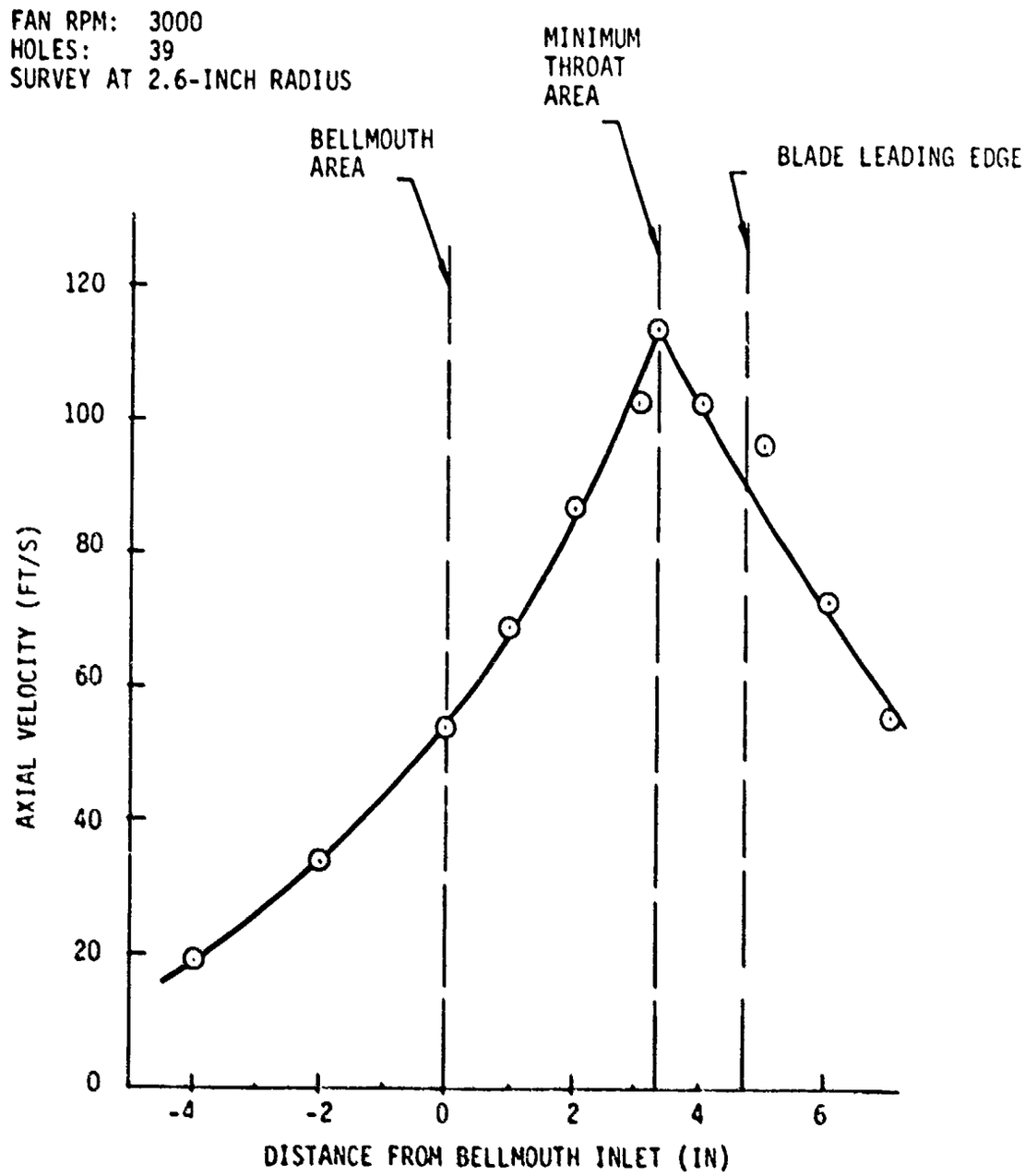

Figure 79 INLET BELLMOUTH LONGITUDINAL VELOCITY SURVEY, OPERATING POINT B, CONFIGURATION 3

CONFIGURATION 4

For the log spiral volute, Configuration 4, a spiral angle of 10.9 degrees was chosen, and the volute width of 9 inches was maintained. The polar coordinates for these volutes are shown in table 15, which is the output from a computer program used for this purpose. The spiral itself is shown in figure 80 (also see figure 81), and may also be seen as the outermost spiral on the Plexiglas volute walls in figures 7 and 8. The spiral angle chosen was the result of a compromise between design for efficiency and the need to keep the volute exit plane height within reasonable limits. Nevertheless, better efficiency was expected, and the performance results shown in figures 82 through 87 and tables 16 through 20 were somewhat disappointing, although the pressure/flow goal was closely approached.

Volute exit and inlet surveys were made before proceeding with the JEFF(A) volute, Configuration 5.

Figure 88 shows the Configuration 4 volute exit plane pressure measurement locations, and figures 89 through 91 show the results of the volute exit plane surveys at these locations for three operating points.

Figure 92 shows the impeller blade inlet flow angle survey results at the second operating point, B, and figure 93 shows the impeller blade velocity survey results at the same operating points.

Figure 94 shows the results of the impeller blade inlet pressure survey, figure 95 shows the results of the impeller blade exit flow angle survey, and figure 96 shows the results of the impeller blade exit pressure survey at operating point B.

TABLE 15. LOG SPIRAL DEFINITION

THETA (DEG)	RADIUS (SAME AS RO)
10.0	6.2049
20.0	6.4169
30.0	6.6361
40.0	6.8627
50.0	7.0971
60.0	7.3396
70.0	7.5902
80.0	7.8495
90.0	8.1176
100.0	8.3949
110.0	8.6816
120.0	8.9782
130.0	9.2848
140.0	9.6020
150.0	9.9299
160.0	10.2691
170.0	10.6199
180.0	10.9826
190.0	11.3578
200.0	11.7457
210.0	12.1469
220.0	12.5618
230.0	12.9909
240.0	13.4346
250.0	13.8935
260.0	14.3680
270.0	14.8588
280.0	15.3663
290.0	15.8912
300.0	16.4340
310.0	16.9953
320.0	17.5758
330.0	18.1761
340.0	18.7969
350.0	19.4390
360.0	20.1029
370.0	20.7896
380.0	21.4997

CONSTANT = 685.577
SPIRAL ANGLE (DEG) = 10.893
BASE CIRCLE RADIUS (RO) = 6.000

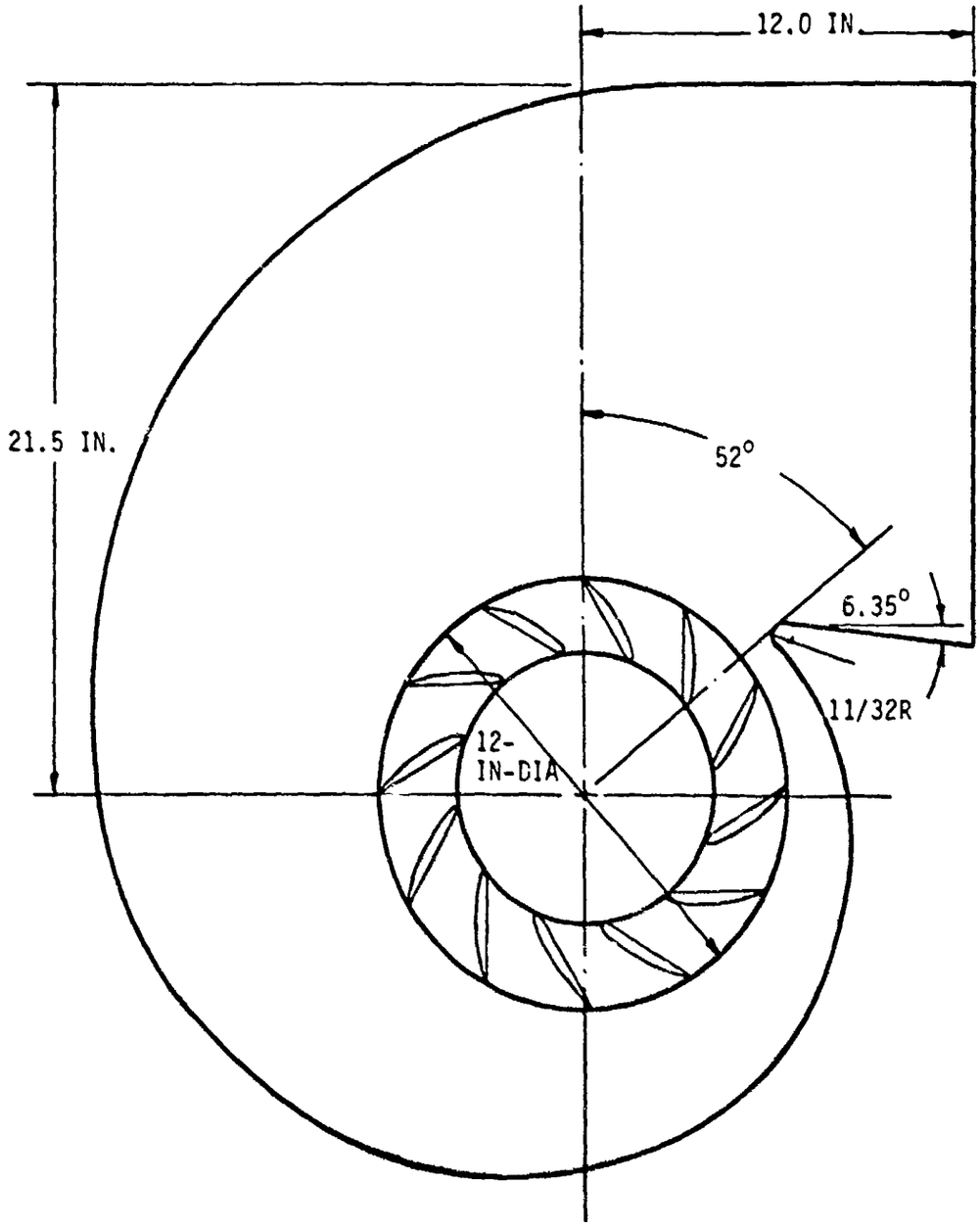

Figure 80 LOG SPIRAL VOLUTE, CONFIGURATION 4

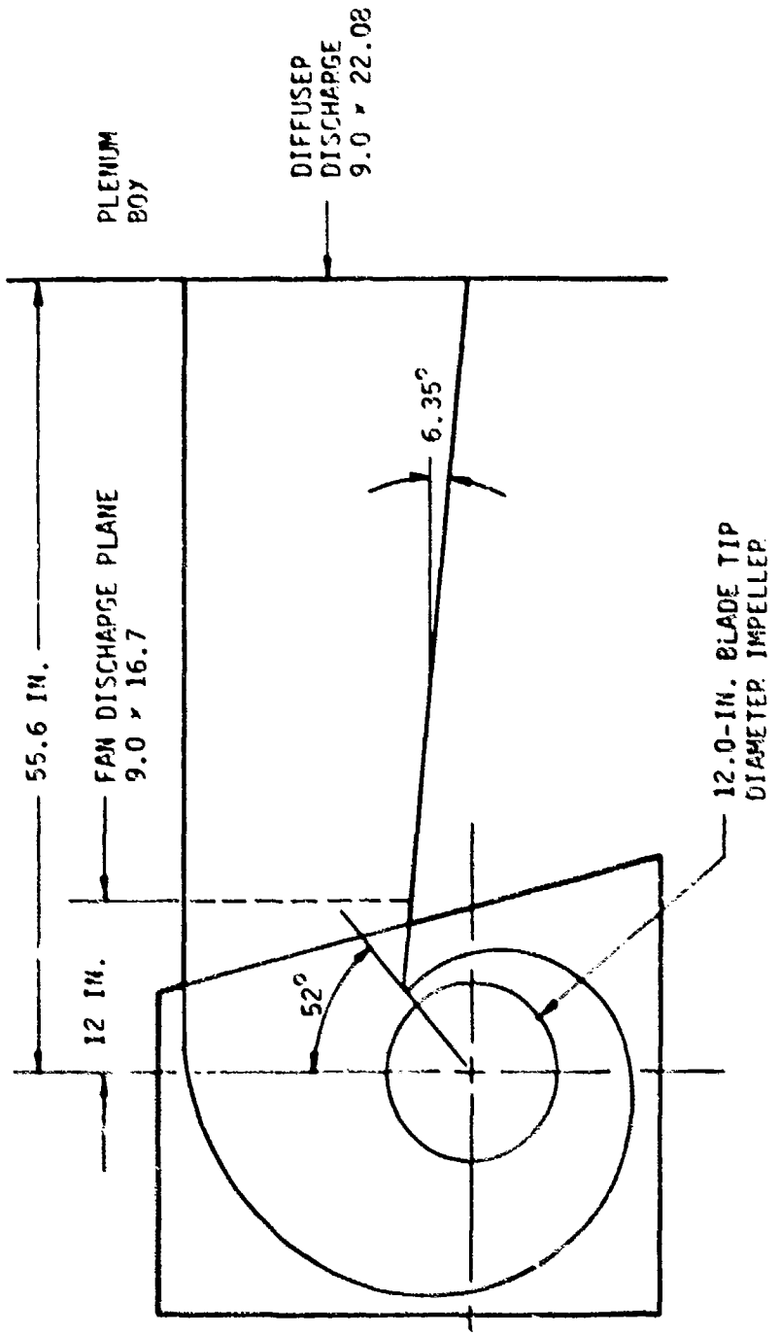

Figure 81 VOLUTE AND DIFFUSER ARRANGEMENT, CONFIGURATION 4

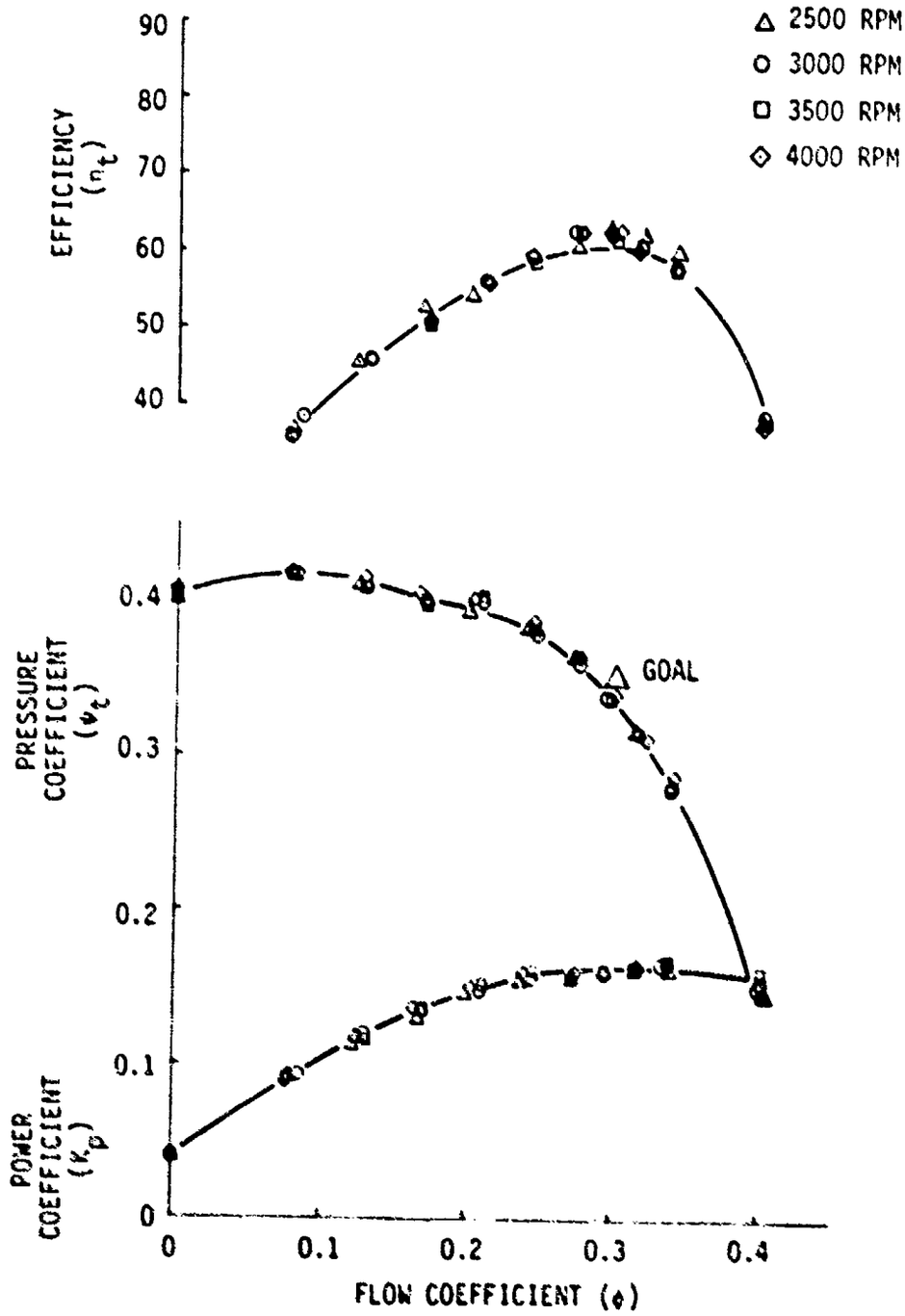

Figure 82 CONFIGURATION 4 PERFORMANCE COMPOSITE

TABLE 16. FAN SPEED 2500 RPM, CONFIGURATION 4*

CENTRIFUGAL FAN TEST DATA REDUCTION PROGRAM
****

(AMCA STANDARD 210-67, FIGURE 4.3)

VOLUTE TYPE - LOG-SPIRAL
SPIRAL ANGLE = 10.89 DEGREES
VOLUTE EXIT AREA = 198.72 SQ. IN.

IMPELLER OUTSIDE DIAMETER (INCHES)	12.000
IMPELLER WIDTH FACTOR (SINGLE WIDTH FAN)	0.217
IMPELLER INSIDE DIAMETER (INCHES)	7.982
IMPELLER EXIT BLADE ANGLE (DEGREES)	61.500
NOZZLE DIAMETER (INCHES)	6.994
INCLINATION OF MANOMETER BANKS (DEGREES)	11.533
INCLINATION OF DIFF. MAN. (DEGREES)	11.533
TORQUE ARM LENGTH (INCHES)	10.000
DUCT AREA TO CHAMBER (SQFT)	1.380
DUCT AREA UPSTREAM OF NOZZLE (SQFT)	15.500
BAROMETER HEIGHT (INCHES OF MERCURY)	29.930
AMBIENT AIR TEMPERATURE (DEGREES F)	56.800
WET BULB TEMPERATURE (DEGREES F)	49.700
WATER DENSITY (LBS/CUFT)	62.383
AMBIENT AIR DENSITY (LBS/CUFT)	0.07656

FAN SPEED = 2500 RPM
****

PHI	PHI	PSI TOTAL	PSI STATIC	ETA TOTAL	ETA STATIC	FLOW CFM	PRESS TOTAL IN WG	PRESS STATIC IN WG	POWER HP	NF
0.0	0.0	0.4040	0.4040	0.0	0.0	0.0	3.169	3.169	0.230	0.035
0.0774	0.0674	0.4170	0.4162	0.3647	0.3640	415.5	3.271	3.265	0.587	0.089
0.1243	0.1081	0.4092	0.4073	0.4548	0.4526	667.0	3.210	3.195	0.742	0.112
0.1687	0.1468	0.3973	0.3938	0.5237	0.5190	905.4	3.117	3.089	0.849	0.128
0.1989	0.1730	0.3911	0.3861	0.5396	0.5328	1067.4	3.068	3.029	0.926	0.144
0.2371	0.2063	0.3812	0.3741	0.5880	0.5771	1272.4	2.990	2.935	1.019	0.154
0.2722	0.2368	0.3605	0.3512	0.6055	0.5898	1460.9	2.828	2.755	1.075	0.162
0.2950	0.2567	0.3400	0.3290	0.6305	0.6102	1583.4	2.667	2.581	1.055	0.159
0.3165	0.2754	0.3139	0.3013	0.6174	0.5926	1698.6	2.462	2.363	1.067	0.161
0.3409	0.2966	0.2825	0.2679	0.5963	0.5654	1829.5	2.216	2.101	1.071	0.161
0.4010	0.3488	0.1505	0.1302	0.3927	0.3397	2151.9	1.181	1.022	1.019	0.154

*See figure 83.

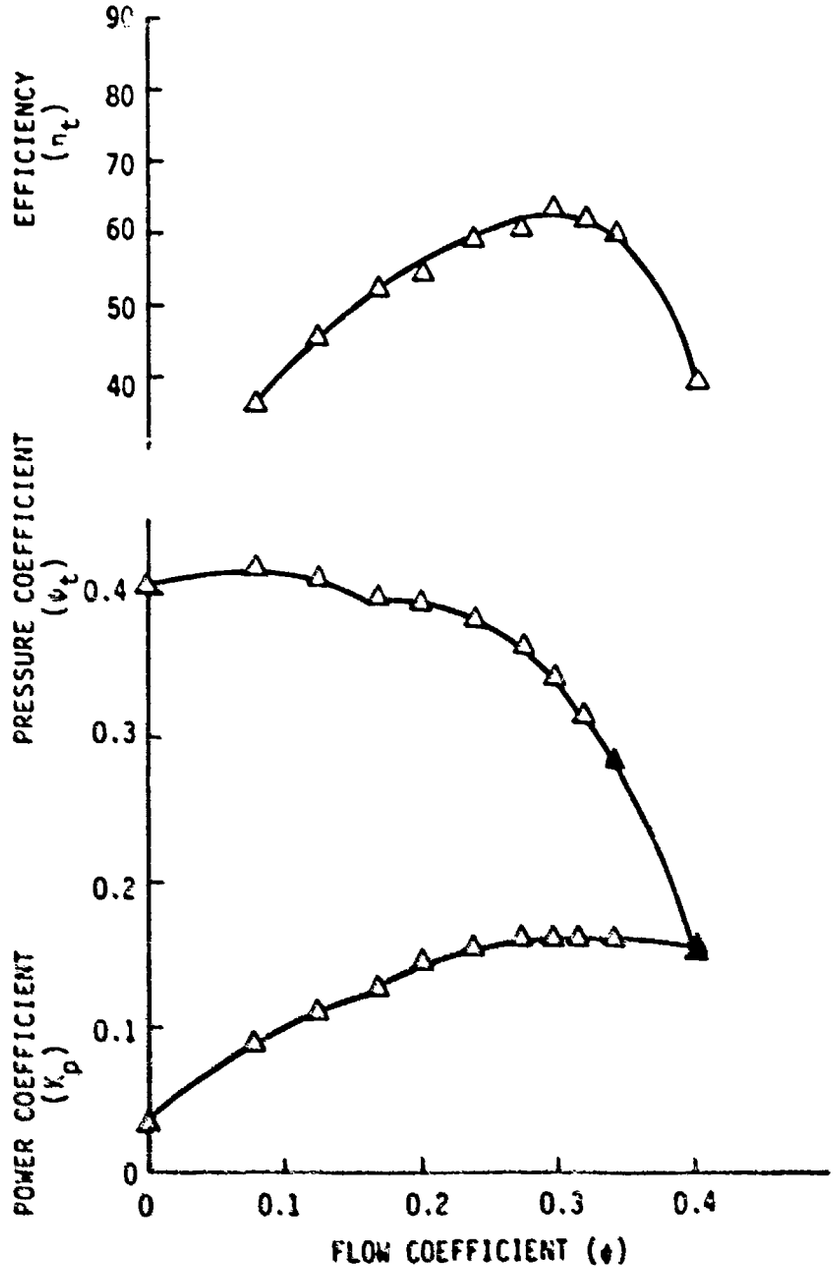

Figure 83 CONFIGURATION 4 PERFORMANCE, 2500 RPM

TABLE 17. FAN SPEED 3000 RPM, CONFIGURATION 4*

CENTRIFUGAL FAN TEST DATA REDUCTION PROGRAM
****

(AMCA STANDARD 210-67, FIGURE 4.3)

VOLUTE TYPE - LOG-SPIRAL
SPIRAL ANGLE = 10.89 DEGREES
VOLUTE EXIT AREA = 198.72 SQ. IN.

IMPELLER OUTSIDE DIAMETER (INCHES)	12.000
IMPELLER WIDTH FACTOR (SINGLE WIDTH FAN)	0.217
IMPELLER INSIDE DIAMETER (INCHES)	7.982
IMPELLER EXIT BLADE ANGLE (DEGREES)	61.500
NOZZLE DIAMETER (INCHES)	6.994
INCLINATION OF MANOMETER BANKS (DEGREES)	11.533
INCLINATION OF DIFF. MAN. (DEGREES)	11.533
TORQUE ARM LENGTH (INCHES)	10.000
DUCT AREA TO CHAMBER (SQFT)	1.380
DUCT AREA UPSTREAM OF NOZZLE (SQFT)	15.500

BAROMETER HEIGHT (INCHES OF MERCURY)	29.280
AMBIENT AIR TEMPERATURE (DEGREES F)	69.100
WET BULB TEMPERATURE (DEGREES F)	57.200
WATER DENSITY (LBS/CUFT)	62.308
AMBIENT AIR DENSITY (LBS/CUFT)	0.07309

FAN SPEED = 3000 RPM
****

PHI	FHI	PSI TOTAL	PSI STATIC	ETA TOTAL	ETA STATIC	FLOW CFM	PRESS TOTAL IN WG	PRESS STATIC IN WG	POWER HP	NP
0.0	0.0	0.4074	0.4074	0.0	0.0	0.0	4.398	4.398	0.414	0.036
0.0762	0.0663	0.4211	0.4204	0.3529	0.3523	490.8	4.546	4.538	0.995	0.091
0.1282	0.1115	0.4141	0.4120	0.4553	0.4530	825.6	4.471	4.448	1.276	0.117
0.1685	0.1466	0.4026	0.3991	0.5046	0.5001	1085.1	4.347	4.308	1.471	0.134
0.2078	0.1807	0.3999	0.3944	0.5566	0.5491	1337.9	4.317	4.255	1.633	0.149
0.2432	0.2116	0.3824	0.3750	0.5855	0.5742	1566.0	4.128	4.049	1.737	0.159
0.2728	0.2373	0.3639	0.3546	0.6268	0.6107	1756.5	3.929	3.829	1.733	0.158
0.2946	0.2563	0.3414	0.3306	0.6249	0.6050	1897.5	3.686	3.569	1.761	0.161
0.3174	0.2761	0.3163	0.3037	0.6170	0.5924	2044.0	3.415	3.279	1.780	0.163
0.3389	0.2948	0.2802	0.2657	0.5773	0.5475	2182.2	3.025	2.869	1.799	0.164
0.4003	0.3483	0.1489	0.1287	0.3794	0.3280	2578.1	1.607	1.389	1.718	0.157

*See figure 84.

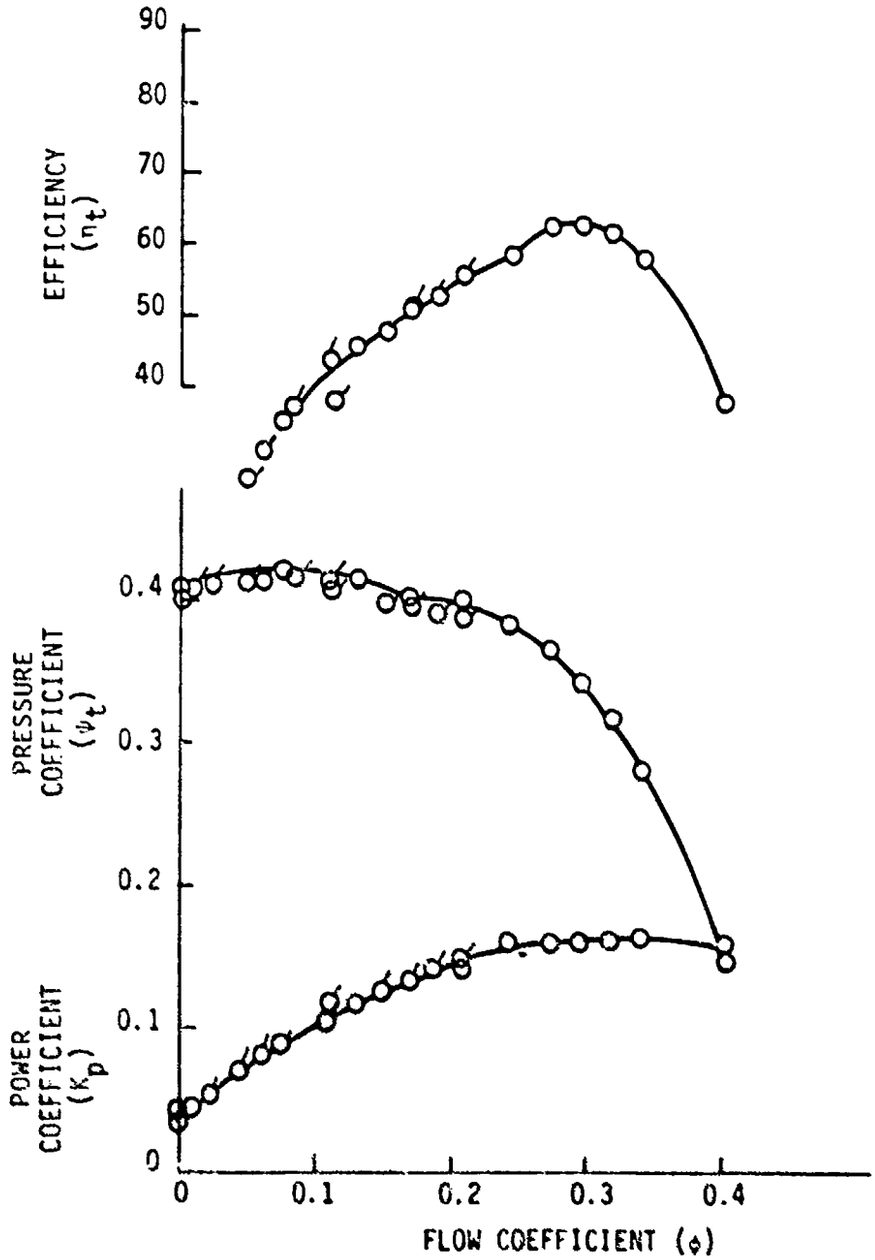

Figure 84 CONFIGURATION 4 PERFORMANCE, 3000 RPM

TABLE 18. FAN SPEED 3000 RPM, EXTRA POINTS, CONFIGURATION 4*

CENTRIFUGAL FAN TEST DATA REDUCTION PROGRAM
****

(AMCA STANDARD 210-67, FIGURE 4.3)

VOLUTE TYPE - LOG-SPIRAL
SPIRAL ANGLE = 10.89 DEGREES
VOLUTE EXIT AREA = 198.72 SQ. IN.

IMPELLER OUTSIDE DIAMETER (INCHES)	12.000
IMPELLER WIDTH FACTOR (SINGLE WIDTH FAN)	0.217
IMPELLER INSIDE DIAMETER (INCHES)	7.982
IMPELLER EXIT BLADE ANGLE (DEGREES)	61.500
NOZZLE DIAMETER (INCHES)	6.994
INCLINATION OF MANOMETER BANKS (DEGREES)	11.533
INCLINATION OF DIFF. MAN. (DEGREES)	11.533
TORQUE ARM LENGTH (INCHES)	10.000
DUCT AREA TO CHAMBER (SQFT)	1.380
DUCT AREA UPSTREAM OF NOZZLE (SQFT)	15.500

BAROMETER HEIGHT (INCHES OF MERCURY)	29.350
AMBIENT AIR TEMPERATURE (DEGREES F)	70.300
WET BULB TEMPERATURE (DEGREES F)	56.000
WATER DENSITY (LBS/CUFT)	62.299
AMBIENT AIR DENSITY (LBS/CUFT)	0.07314

FAN SPEED = 3000 RPM
****

PHI	FHI	PSI TOTAL	PSI STATIC	ETA TOTAL	ETA STATIC	FLOW CFM	PRESS TOTAL IN WG	PRESS STATIC IN WG	POWER HP	NP
0.0	0.0	0.4015	0.4015	0.0	0.0	0.0	4.338	4.338	0.390	0.036
0.0102	0.0089	0.4089	0.4089	0.0933	0.0933	65.8	4.419	4.418	0.490	0.045
0.0231	0.0201	0.4117	0.4117	0.1775	0.1775	148.5	4.449	4.448	0.586	0.053
0.0468	0.0407	0.4138	0.4135	0.2733	0.2731	301.4	4.471	4.468	0.776	0.071
0.0590	0.0520	0.4130	0.4126	0.3104	0.3101	385.1	4.463	4.458	0.871	0.080
0.0816	0.0710	0.4153	0.4144	0.3710	0.3702	525.2	4.487	4.478	1.000	0.091
0.1086	0.0945	0.4150	0.4135	0.4282	0.4267	699.2	4.484	4.468	1.152	0.105
0.1101	0.0958	0.4076	0.4061	0.3823	0.3809	709.0	4.405	4.388	1.285	0.117
0.1503	0.1308	0.3988	0.3959	0.4787	0.4753	968.0	4.309	4.278	1.371	0.125
0.1691	0.1472	0.3986	0.3950	0.5068	0.5022	1089.2	4.307	4.268	1.457	0.133
0.1874	0.1630	0.3933	0.3889	0.5265	0.5206	1206.8	4.250	4.202	1.533	0.140
0.2077	0.1807	0.3930	0.3876	0.5406	0.5328	1337.8	4.247	4.188	1.595	0.146

*See figure 85.

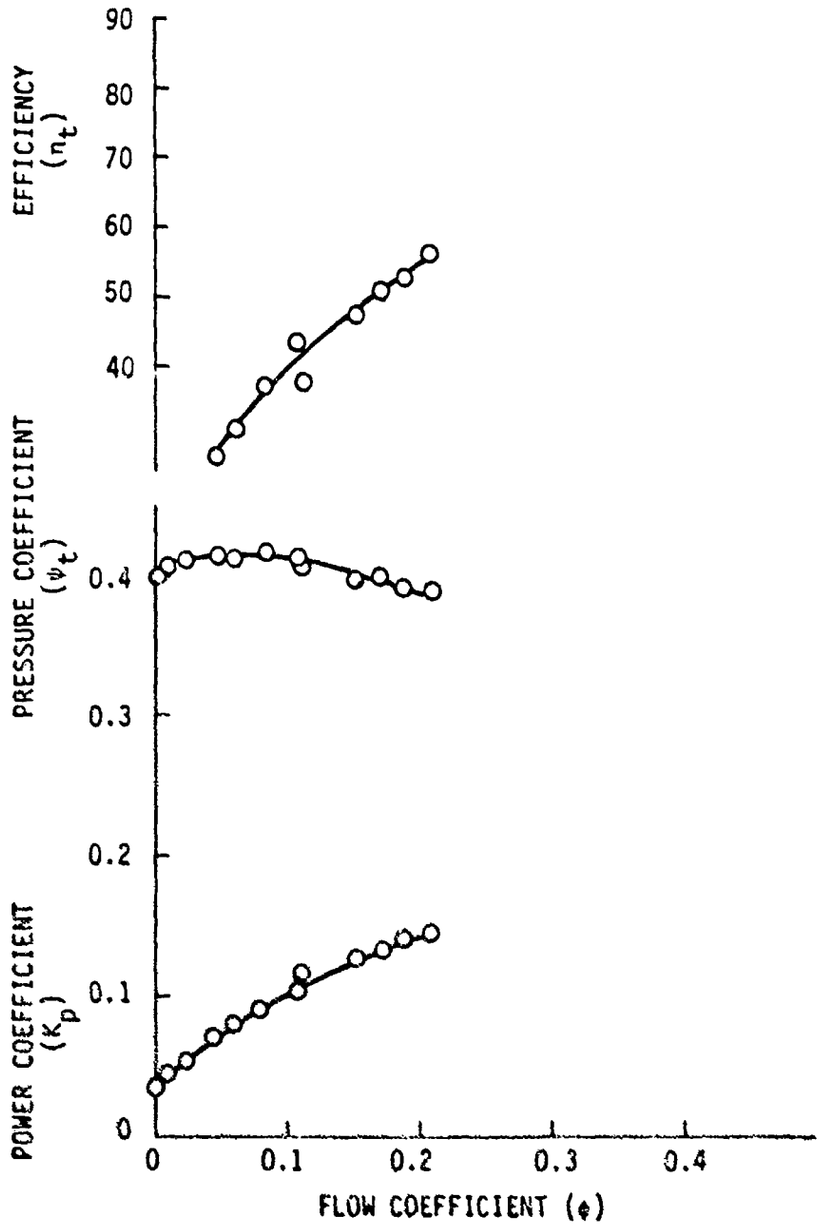

Figure 85 CONFIGURATION 4 PERFORMANCE, 3000 RPM (EXTRA POINTS)

TABLE 19. FAN SPEED 3500 RPM, CONFIGURATION 4*

CENTRIFUGAL FAN TEST DATA REDUCTION PROGRAM
****

(AMCA STANDARD 210-67, FIGURE 4.3)

VOLUTE TYPE - LOG-SPIRAL
SPIRAL ANGLE = 10.89 DEGREES
VOLUTE EXIT AREA = 198.72 SQ. IN.

IMPELLER OUTSIDE DIAMETER (INCHES)	12.000
IMPELLER WIDTH FACTOR (SINGLE WIDTH FAN)	0.217
IMPELLER INSIDE DIAMETER (INCHES)	7.982
IMPELLER EXIT BLADE ANGLE (DEGREES)	61.500
NOZZLE DIAMETER (INCHES)	6.994
INCLINATION OF MANOMETER BANKS (DEGREES)	11.533
INCLINATION OF DIFF. MAN. (DEGREES)	11.533
TORQUE ARM LENGTH (INCHES)	10.000
DUCT AREA TO CHAMBER (SQFT)	1.380
DUCT AREA UPSTREAM OF NOZZLE (SQFT)	15.500

BAROMETER HEIGHT (INCHES OF MERCURY)	29.850
AMBIENT AIR TEMPERATURE (DEGREES F)	61.500
WET BULB TEMPERATURE (DEGREES F)	52.800
WATER DENSITY (LBS/CUFT)	62.358
AMBIENT AIR DENSITY (LBS/CUFT)	0.07564

FAN SPEED = 3500 RPM
****

PHI	FHI	PSI TOTAL	PSI STATIC	ETA TOTAL	ETA STATIC	FLOW CFM	PRESS TOTAL IN WG	PRESS STATIC IN WG	POWER HP	NP
0.0	0.0	0.4032	0.4032	0.0	0.0	0.0	6.128	6.128	0.683	0.038
0.0786	0.0684	0.4180	0.4172	0.3593	0.3587	590.6	6.351	6.340	1.644	0.091
0.1313	0.1142	0.4109	0.4088	0.4571	0.4547	986.2	6.245	6.212	2.121	0.118
0.1696	0.1476	0.3989	0.3954	0.5024	0.4979	1274.3	6.062	6.008	2.421	0.133
0.2092	0.1820	0.3991	0.3936	0.5607	0.5530	1571.5	6.065	5.982	2.677	0.149
0.2431	0.2115	0.3830	0.3756	0.5853	0.5741	1826.6	5.820	5.708	2.860	0.159
0.2726	0.2371	0.3625	0.3533	0.6248	0.6088	2047.8	5.509	5.368	2.843	0.158
0.2955	0.2571	0.3366	0.3256	0.6133	0.5934	2220.2	5.115	4.948	2.915	0.162
0.3158	0.2747	0.3141	0.3015	0.6058	0.5817	2372.5	4.772	4.582	2.943	0.164
0.3381	0.2941	0.2801	0.2658	0.5752	0.5458	2540.1	4.257	4.039	2.960	0.165
0.4004	0.3483	0.1483	0.1281	0.3748	0.3238	3008.0	2.254	1.947	2.849	0.158

*See figure 85.

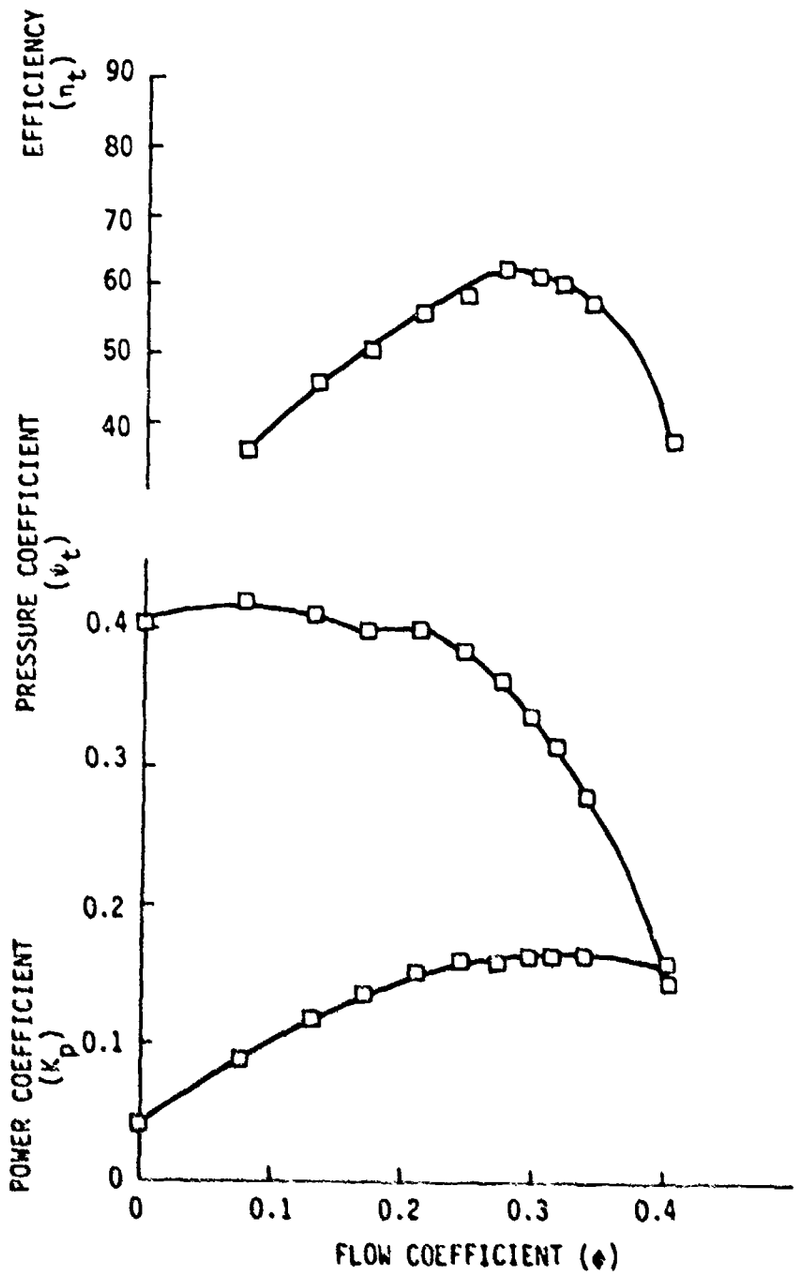

Figure 86 CONFIGURATION 4 PERFORMANCE, 3500 RPM

TABLE 20. FAN SPEED 4000 RPM, CONFIGURATION 4*

CENTRIFUGAL FAN TEST DATA REDUCTION PROGRAM
****

(AMCA STANDARD 210-67, FIGURE 4.3)

VOLUTE TYPE - LOG-SPIRAL
SPIRAL ANGLE = 10.89 DEGREES
VOLUTE EXIT AREA = 198.72 SQ. IN.

IMPELLER OUTSIDE DIAMETER (INCHES)	12.000
IMPELLER WIDTH FACTOR (SINGLE WIDTH FAN)	0.217
IMPELLER INSIDE DIAMETER (INCHES)	7.982
IMPELLER EXIT BLADE ANGLE (DEGREES)	61.500
NOZZLE DIAMETER (INCHES)	6.994
INCLINATION OF MANOMETER BANKS (DEGREES)	11.533
INCLINATION OF DIFF. MAN. (DEGREES)	11.533
TORQUE ARM LENGTH (INCHES)	10.000
DUCT AREA TO CHAMBER (SQFT)	1.380
DUCT AREA UPSTREAM OF NOZZLE (SQFT)	15.500

BAROMETER HEIGHT (INCHES OF MERCURY)	29.850
AMBIENT AIR TEMPERATURE (DEGREES F)	68.100
WET BULB TEMPERATURE (DEGREES F)	56.000
WATER DENSITY (LBS/CUFT)	62.315
AMBIENT AIR DENSITY (LBS/CUFT)	0.07468

FAN SPEED = 4000 RPM
****

PHI	FHI	PSI TOTAL	PSI STATIC	ETA TOTAL	ETA STATIC	FLOW CFM	PRESS TOTAL IN WG	PRESS STATIC IN WG	POWER HP	KP
0.0	0.0	0.4050	0.4050	0.0	0.0	0.0	7.941	7.941	1.028	0.039
0.0785	0.0683	0.4183	0.4175	0.3544	0.3537	674.3	8.202	8.187	2.456	0.093
0.1269	0.1104	0.4131	0.4111	0.4456	0.4435	1089.4	8.100	8.061	3.116	0.118
0.1650	0.1436	0.4026	0.3991	0.4901	0.4859	1417.1	7.894	7.827	3.592	0.136
0.2056	0.1788	0.4003	0.3951	0.5445	0.5373	1765.0	7.851	7.747	4.005	0.151
0.2418	0.2104	0.3850	0.3777	0.5784	0.5674	2076.1	7.550	7.407	4.265	0.161
0.2737	0.2381	0.3637	0.3543	0.6192	0.6033	2349.9	7.131	6.947	4.259	0.161
0.2974	0.2587	0.3375	0.3265	0.6126	0.5926	2553.5	6.619	6.402	4.341	0.164
0.3193	0.2778	0.3109	0.2982	0.5972	0.5728	2741.5	6.098	5.848	4.405	0.166
0.3386	0.2946	0.2804	0.2661	0.5721	0.5429	2907.7	5.499	5.218	4.398	0.166

*See figure 87.

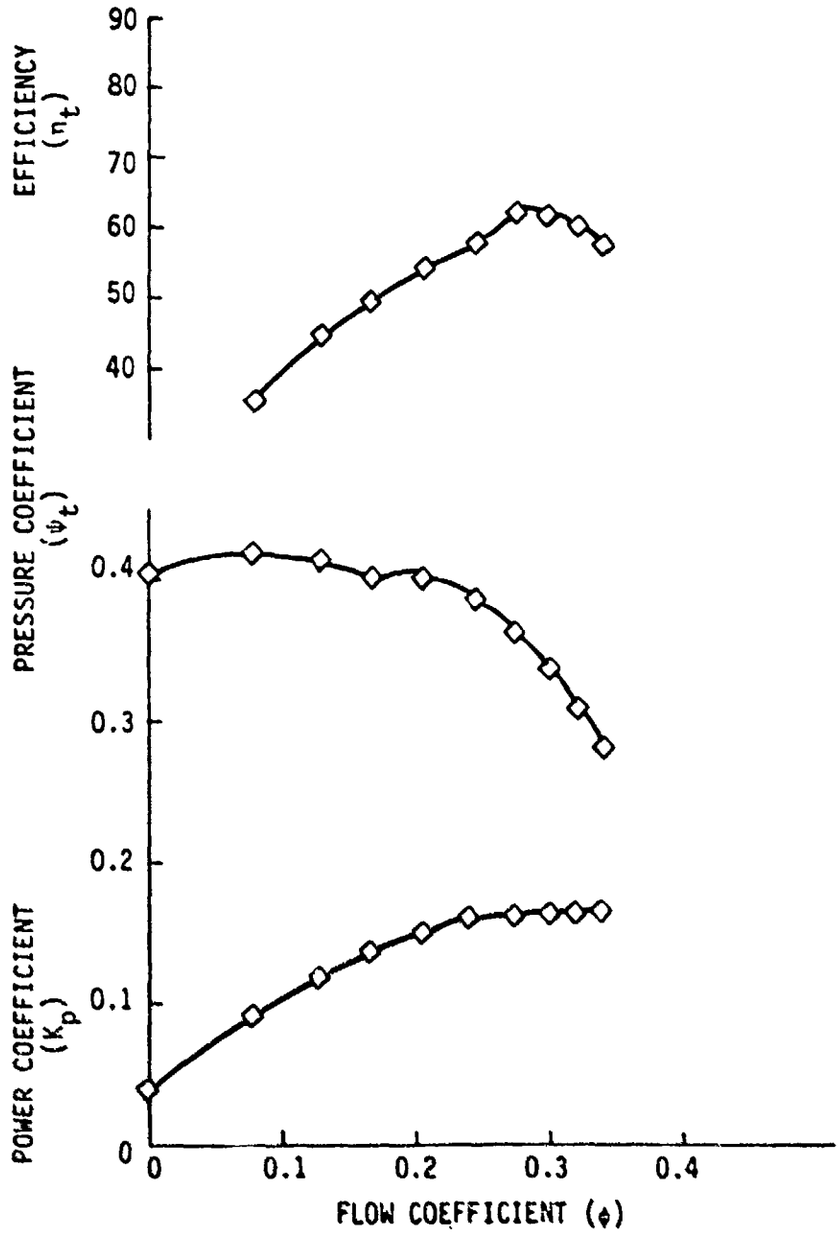

Figure 87 CONFIGURATION 4 PERFORMANCE, 4000 RPM

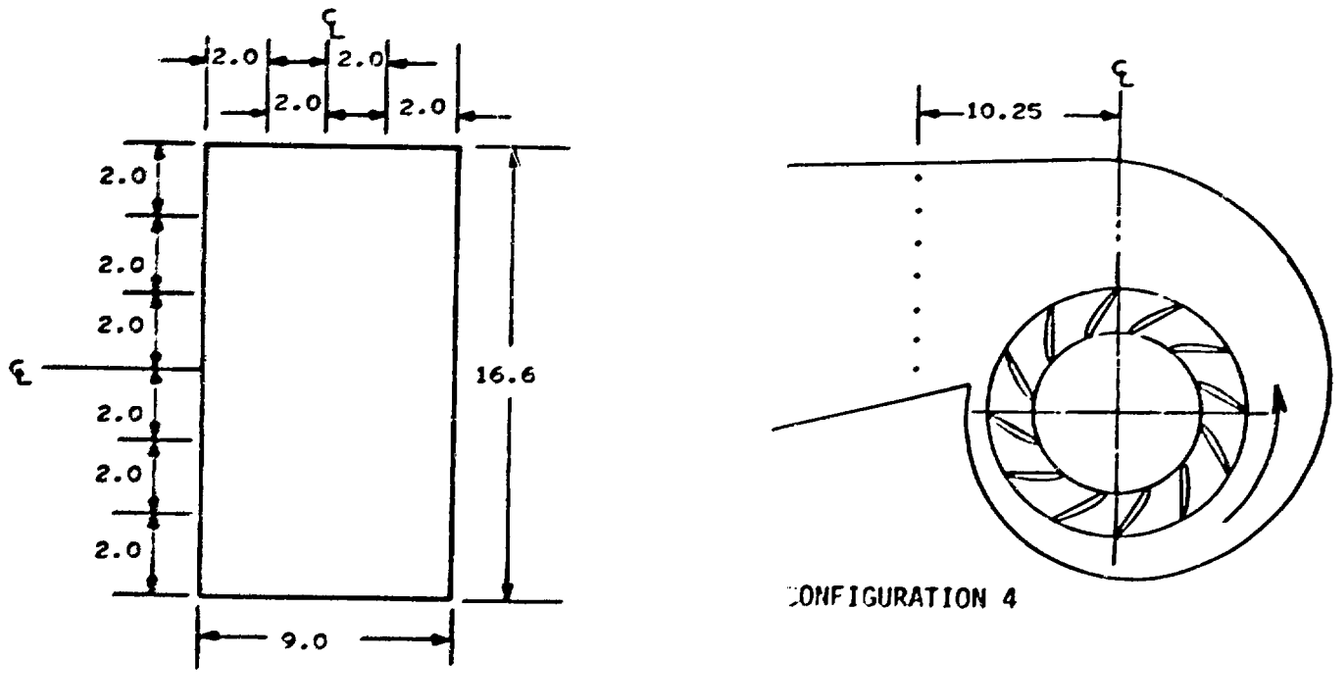

10.9-DEGREE LOG SPIRAL VOLUTE

Figure 88 VOLUTE EXIT PLANE PRESSURE MEASUREMENT LOCATIONS, CONFIGURATION 4

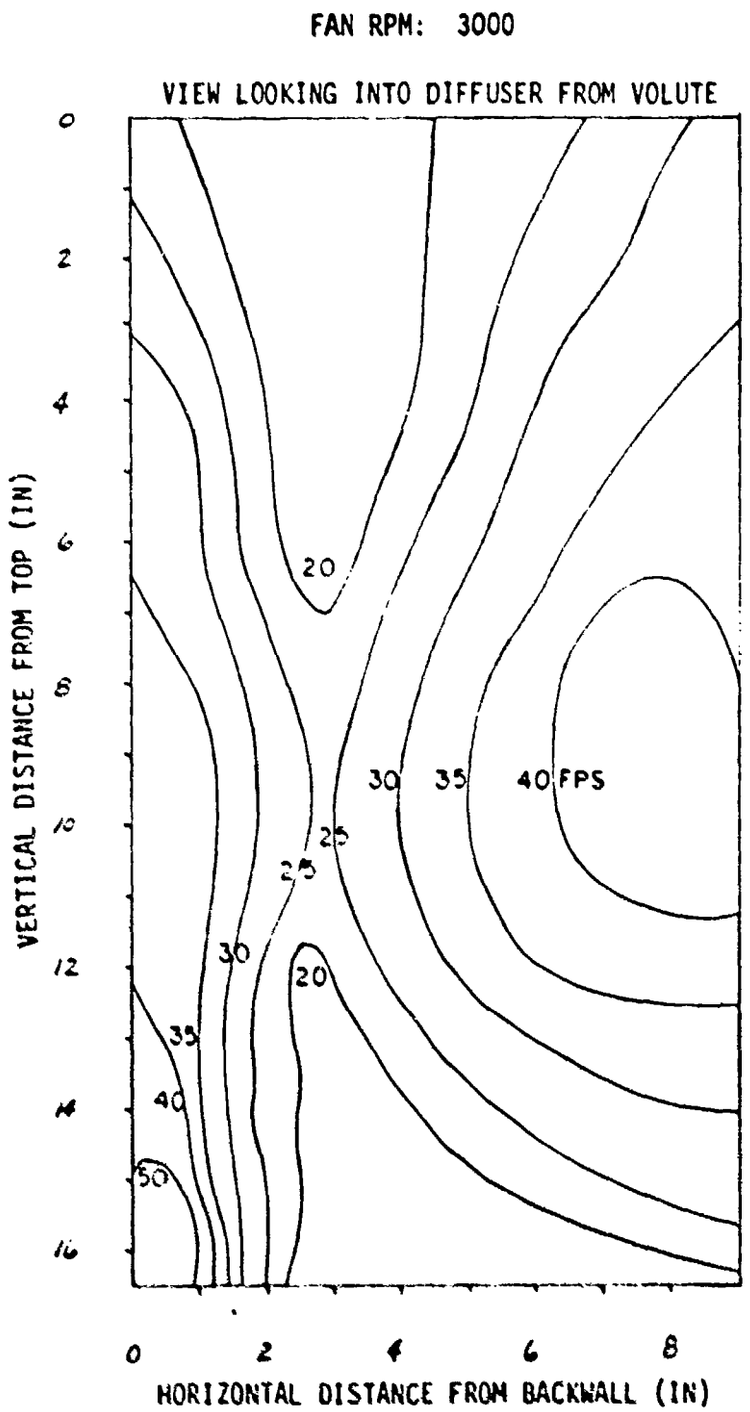

Figure 69 VOLUTE EXIT PLANE SURVEY, OPERATING POINT A, CONFIGURATION 4

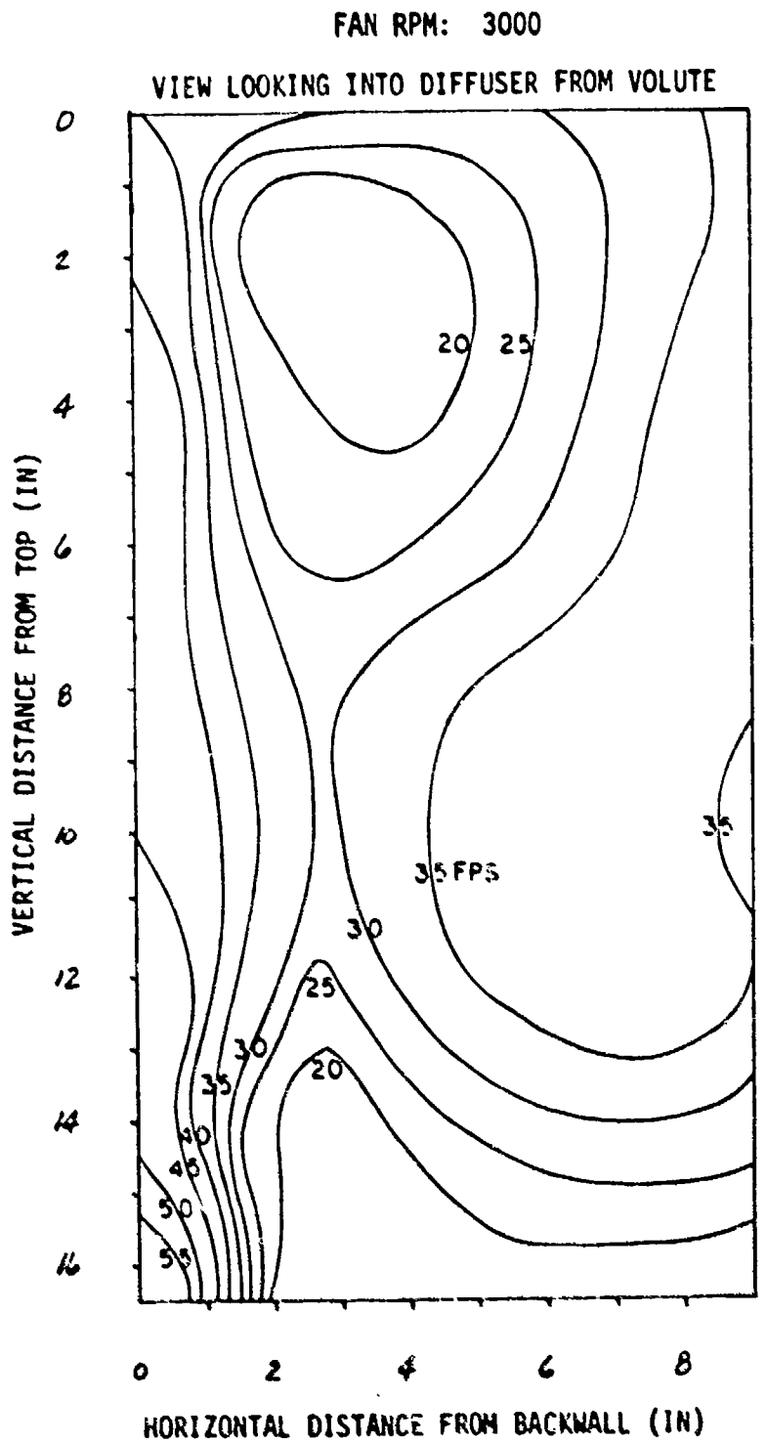

Figure 90 VOLUTE EXIT PLANE SURVEY, OPERATING POINT B, CONFIGURATION 4

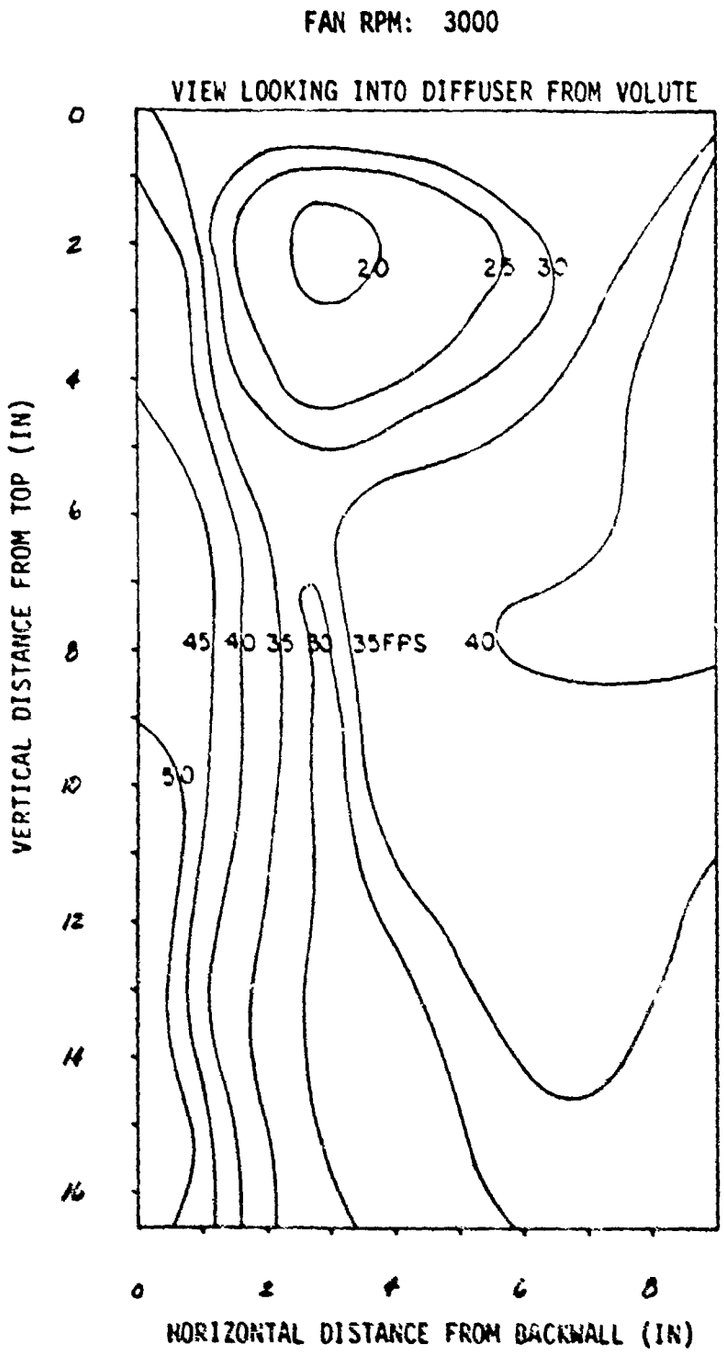

Figure 91 VOLUTE EXIT PLANE SURVEY, OPERATING POINT C, CONFIGURATION 4

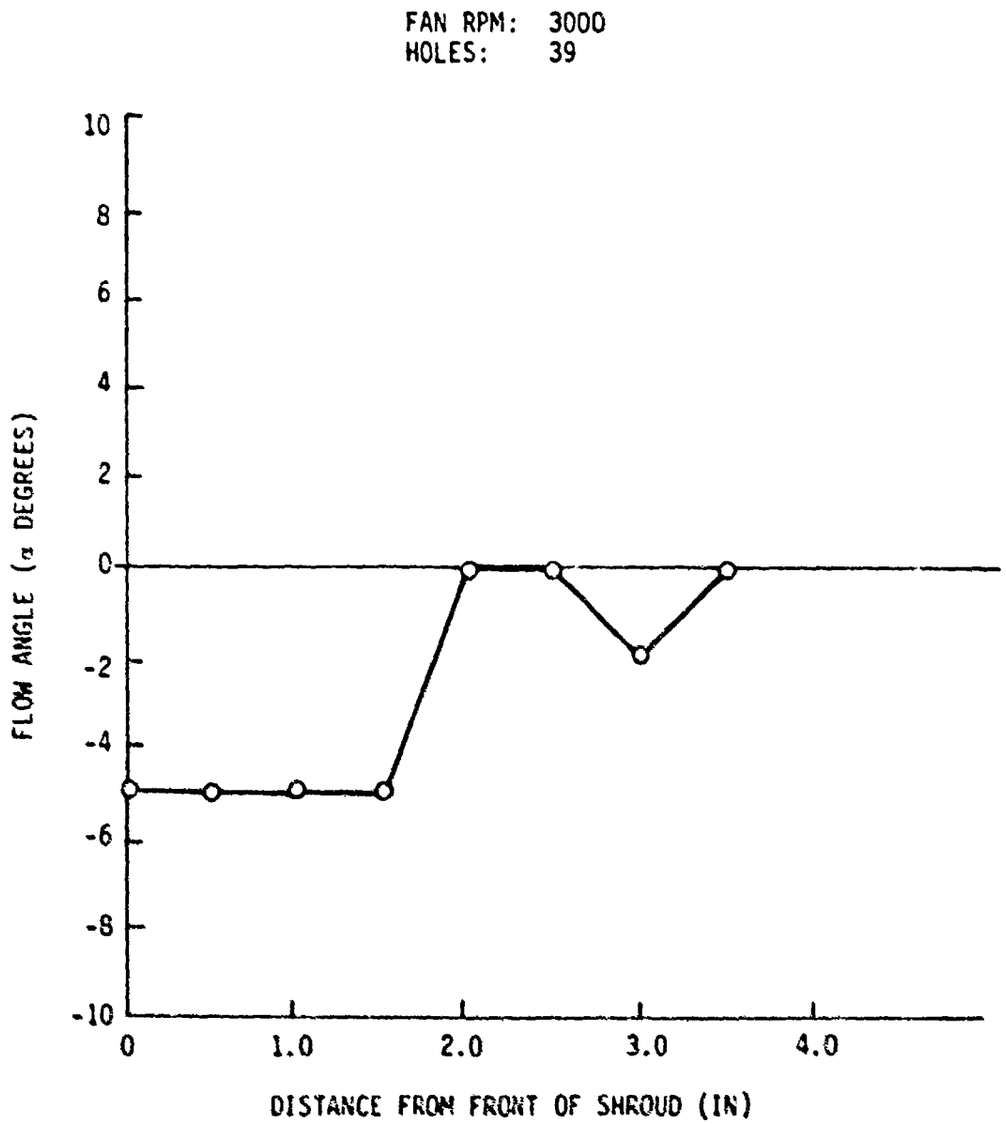

Figure 92 IMPELLER BLADE INLET FLOW ANGLE SURVEY, OPERATING POINT B, CONFIGURATION 4

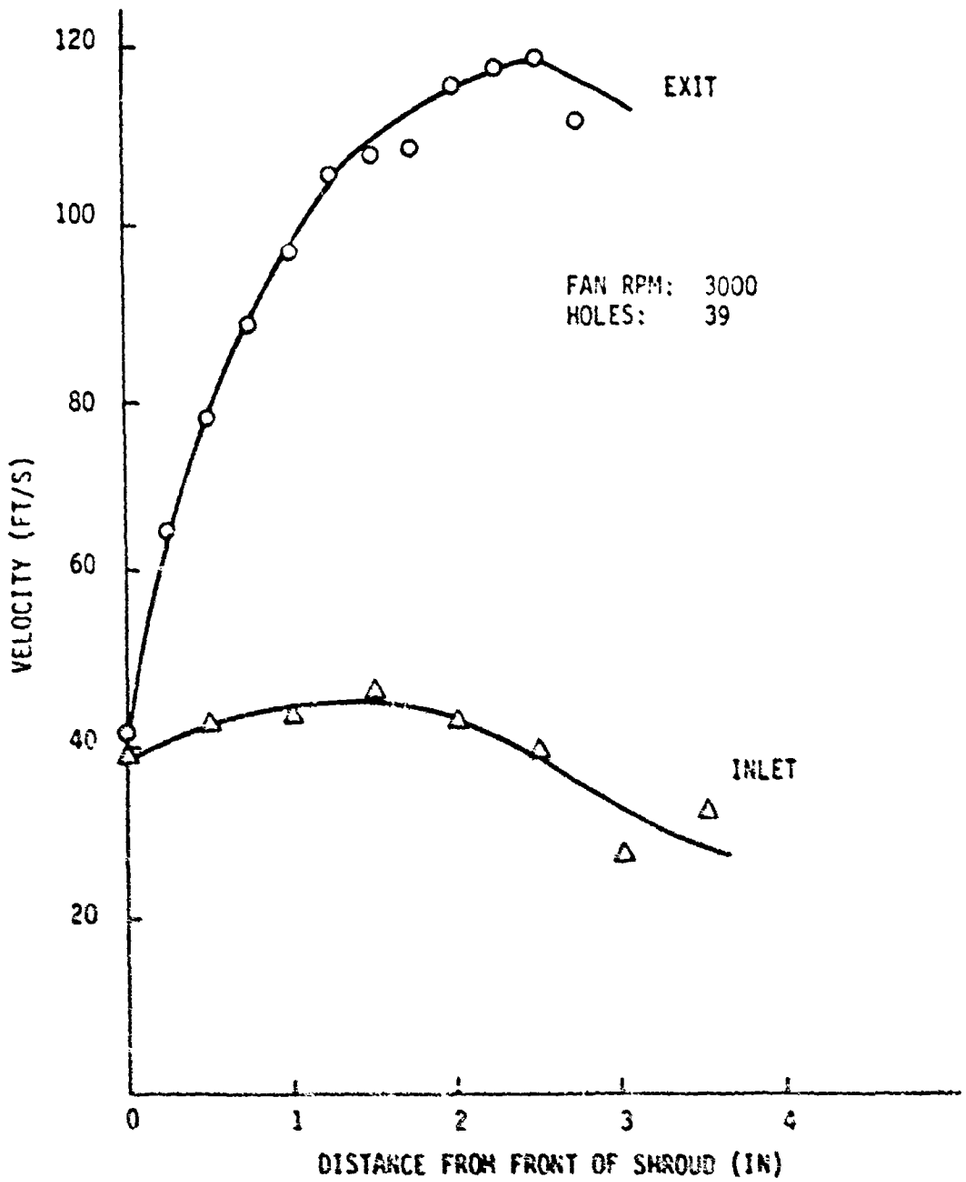

Figure 95 IMPELLER BLADE VELOCITY SURVEY, OPERATING POINT B, CONFIGURATION 4

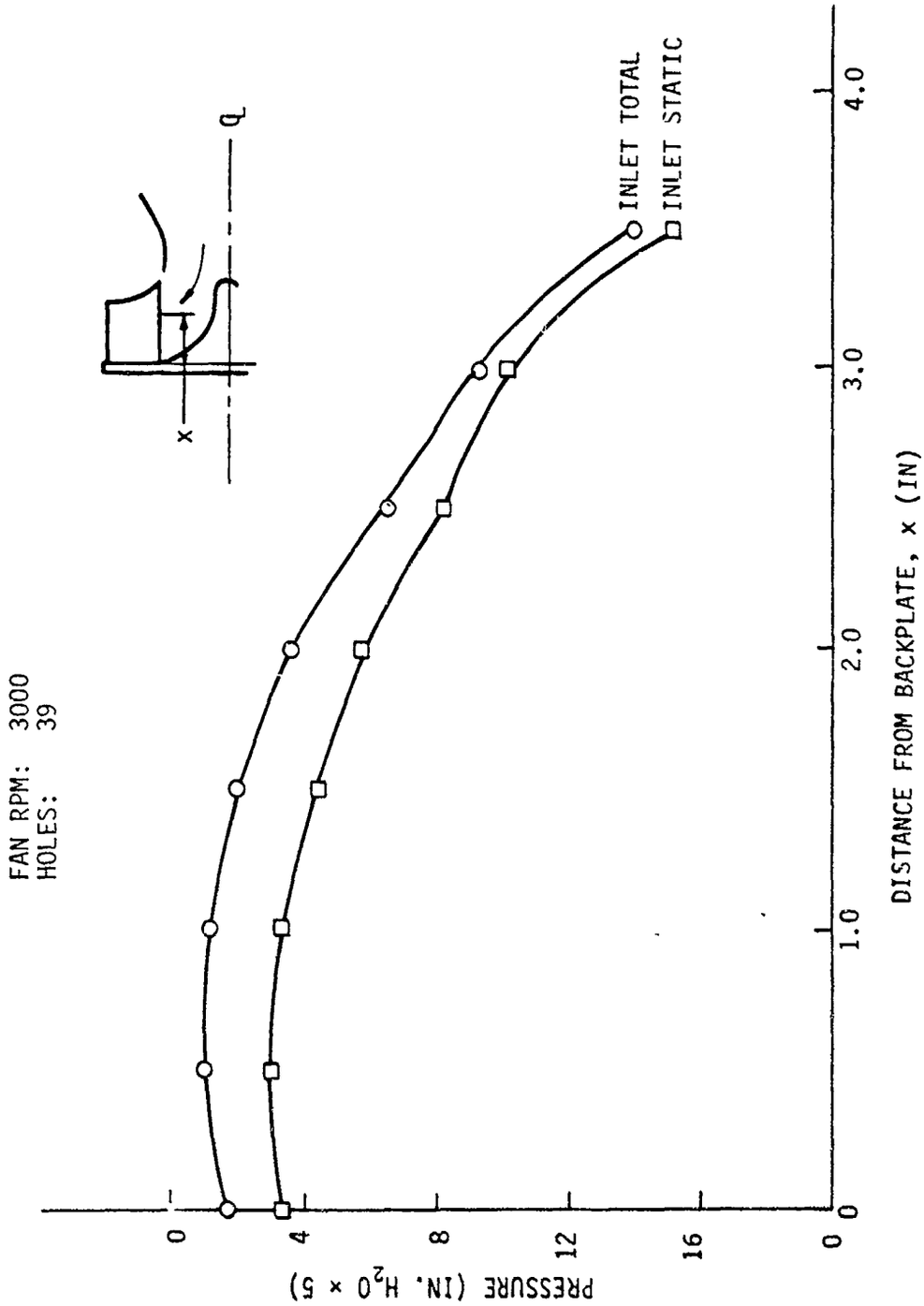

Figure 94 IMPELLER BLADE INLET PRESSURE SURVEY, OPERATING POINT B, CONFIGURATION 4

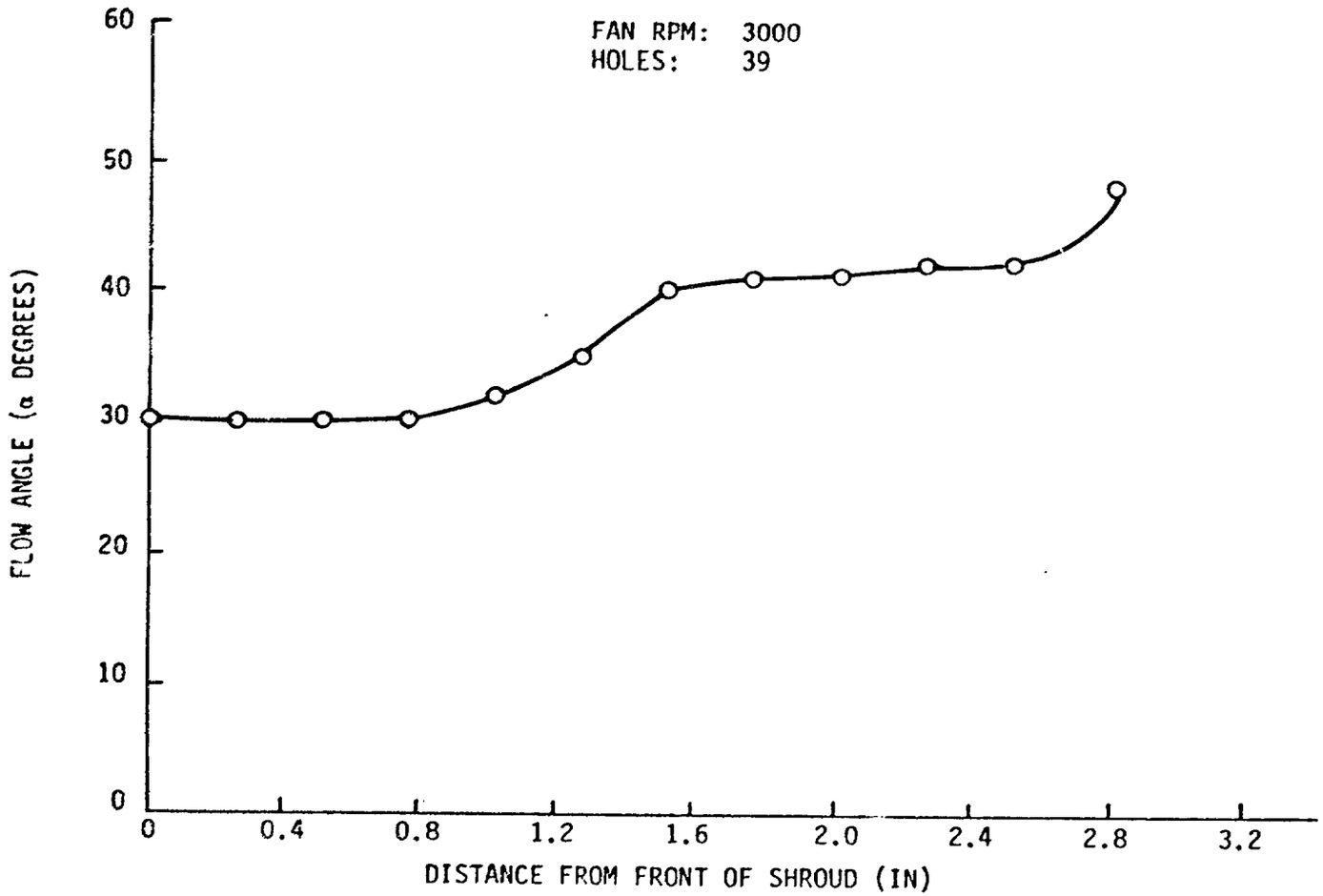

Figure 95 IMPELLER BLADE EXIT FLOW ANGLE SURVEY, OPERATING POINT B, CONFIGURATION 4

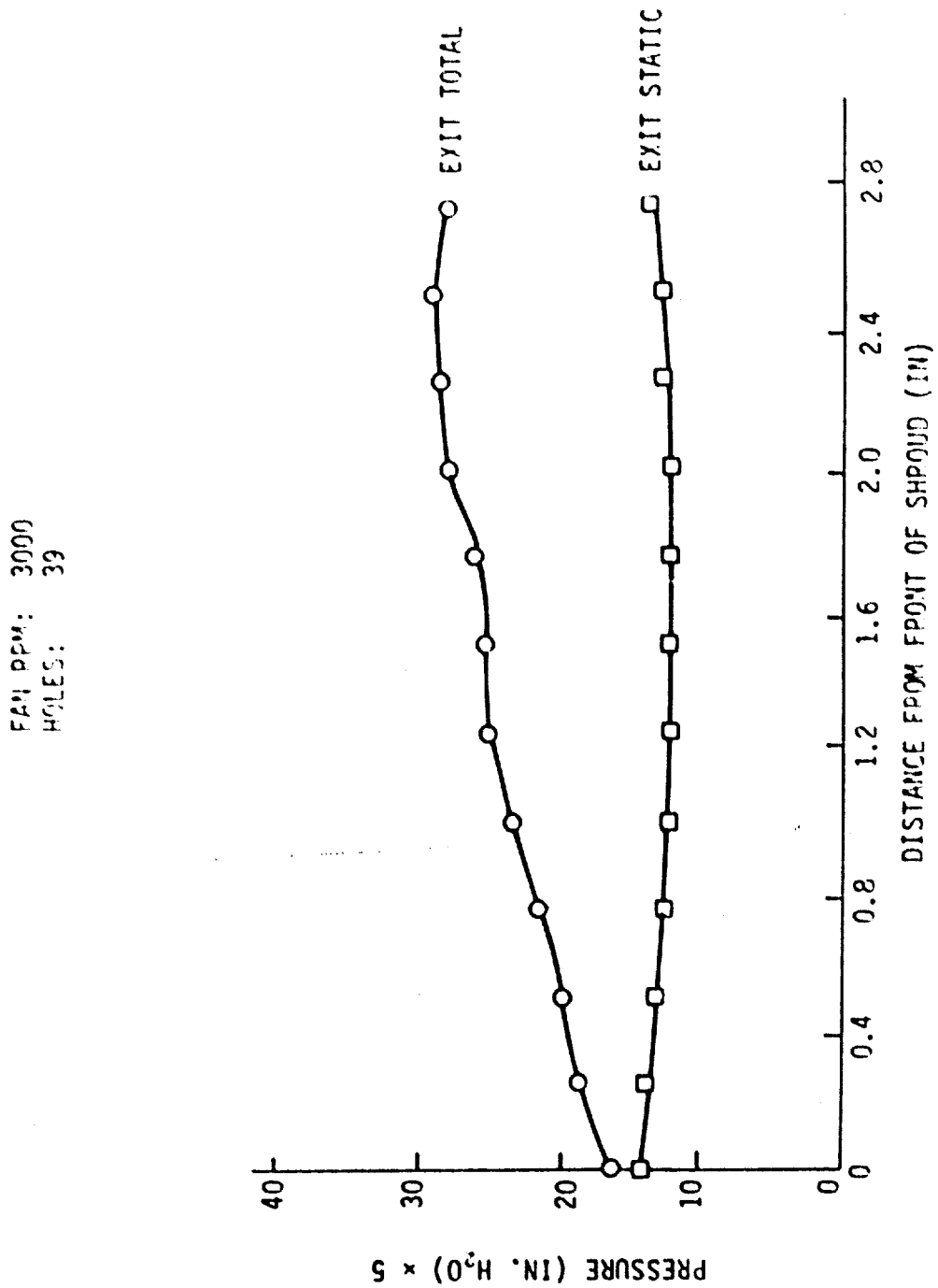

Figure 96 IMPELLER BLADE EXIT PRESSURE SURVEY, OPERATING POINT B, CONFIGURATION 4

Best Available Copy

5. JEFF(A) VOLUTE AND DIFFUSER, CONFIGURATION 5

The JEFF(A) volute geometry was carefully reproduced in accordance with the drawings provided in the *JEFF(A) Scale Model Test Programs Lift Fan Performance Evaluation* (Report No. ALRC 9737-0621, April 1977).[2] The JEFF(A) configuration is shown diagrammatically in figures 97 and 98 for comparison with the other configurations, and the ALRC drawings are reproduced in figures 99 through 101.

Performance tests were carried out at speeds of 2500, 3000, 3500, and 4000 rpm. The results are presented in figures 102 through 106 and tables 21 through 24. Surveys were performed at both the volute exit plane and at the diffuser exit plane for three operating points and two fan speeds, as indicated by the matrix shown in table 6.

Surveys were also made of the flow entering the inlet and blades, and the flow leaving the blades. Velocity (airspeed and direction) was determined from the total and static pressures recorded. The locations at which all these measurements were made are indicated on figures 25, 26, and 27.

Figures 107 through 109 show the Configuration 5 inlet bellmouth velocity survey results for three operating points.

Figure 110 shows the volute exit plane pressure measurement locations, and figures 111 through 113 show the results of the volute exit plane surveys at these locations for three operating points.

Figure 114 shows the diffuser exit plane pressure measurement locations, and figures 115 through 118 show the results of the diffuser exit plane surveys at these locations for four operating points.

Figure 119 shows the impeller blade inlet flow angle survey results at the second operating point, B, and figure 120 shows the impeller blade velocity survey results at the same operating point.

Figure 121 shows the results of the impeller blade inlet pressure survey, figure 122 shows the results of the impeller blade exit flow angle survey, and figure 123 shows the results of the impeller blade exit pressure survey at operating point B.

For all the fan tests described in sections 4 and 5, the reader is referred to section 6, Discussion of Results.

---

[2] J. B. Stek, *JEFF(A) Scale Model Test Programs Lift Fan Performance Evaluation* *Aerojet Liquid Rocket Company Report No. ALRC 9737-0621, April 1977).

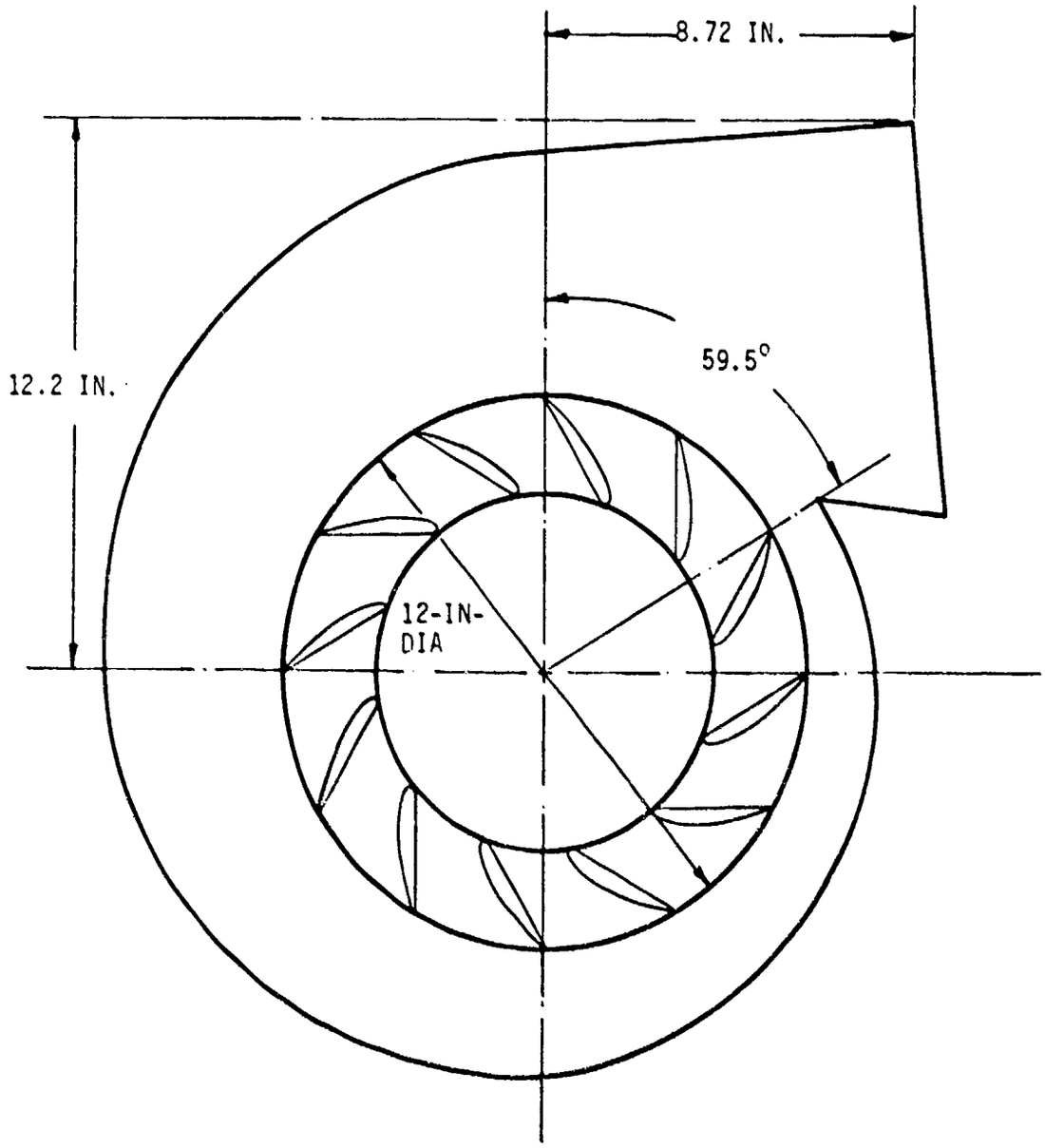

Figure 97 JEFF(A) VOLUTE, CONFIGURATION 5

FOR DETAILS OF DIMENSIONS, SEE ALRC DWG, FIGURES 99, 100, AND 101.

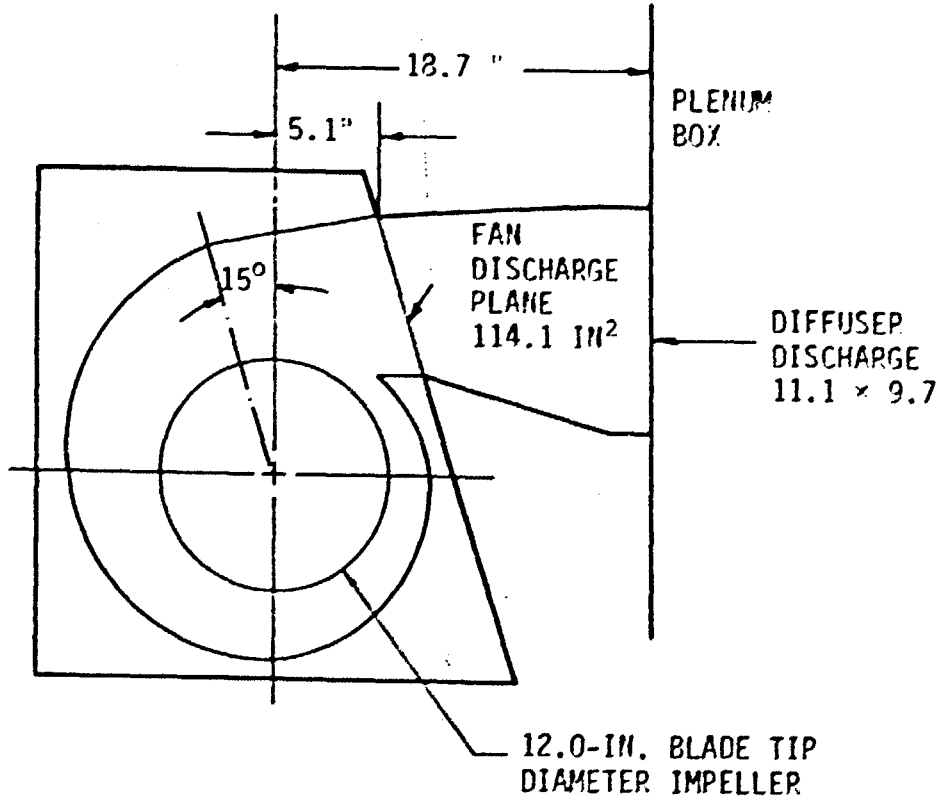

Figure 98 JEFF(A) VOLUTE AND DIFFUSER ARRANGEMENT, CONFIGURATION 5

Bell Aerospace TEXTRON
Division of Textron Inc.

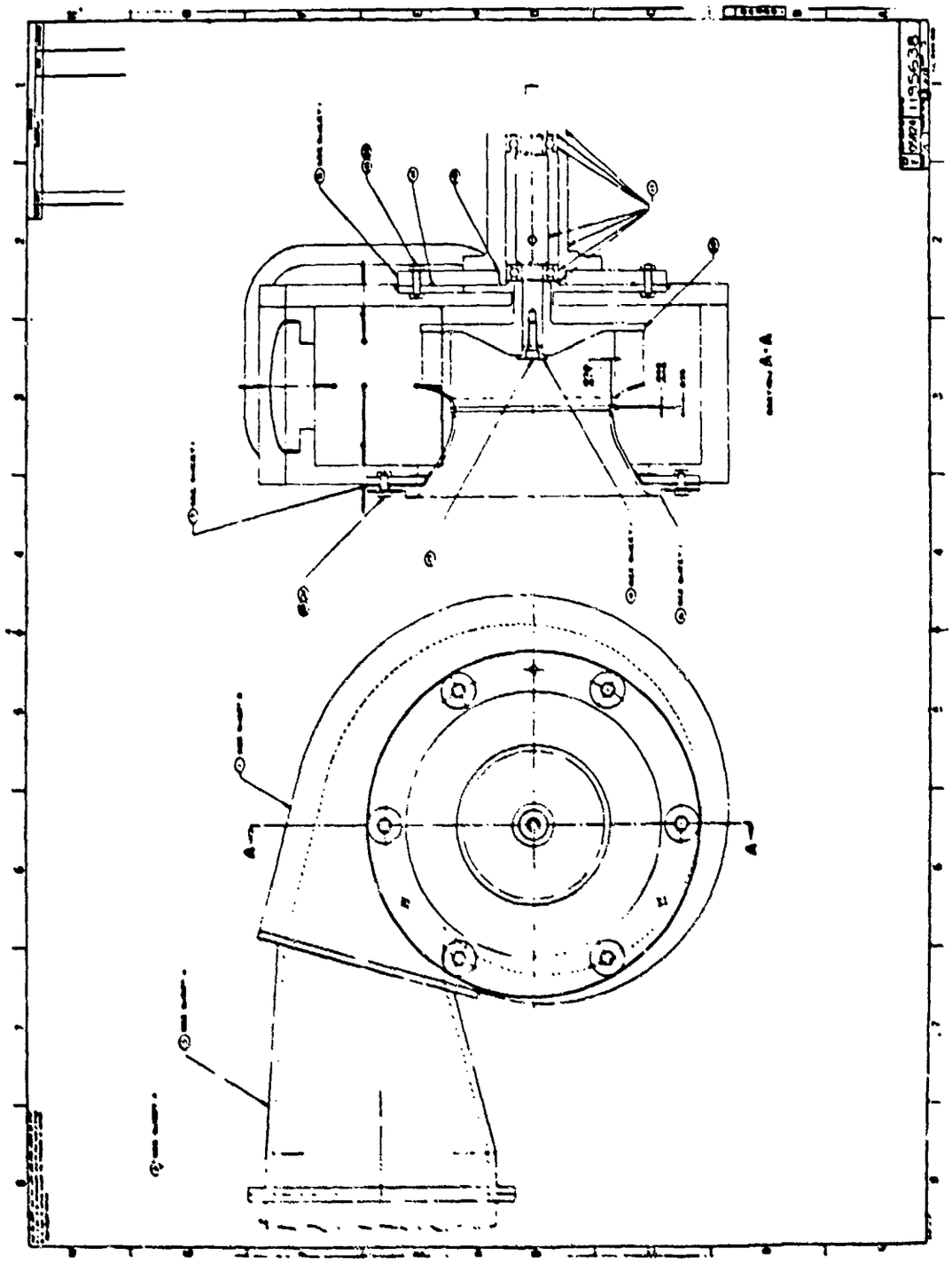

Figure 99 JEFF(A) VOLUTE DETAILS, CONFIGURATION 5, ALRC DRAWING 185638-2

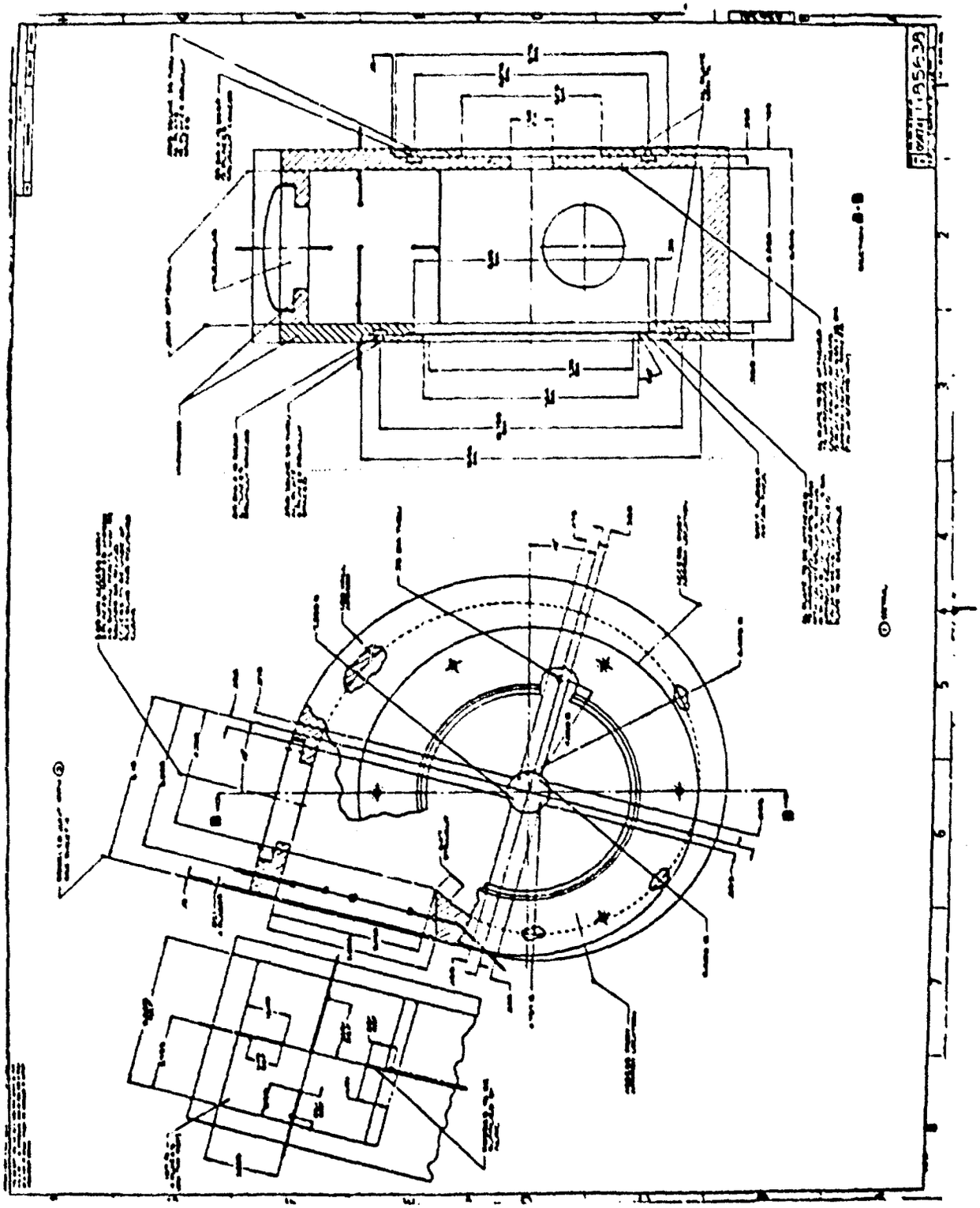

Figure 100 JEF(A) VOLUTE DETAILS, CONFIGURATION 5, ALPC DRAWING 185639-3

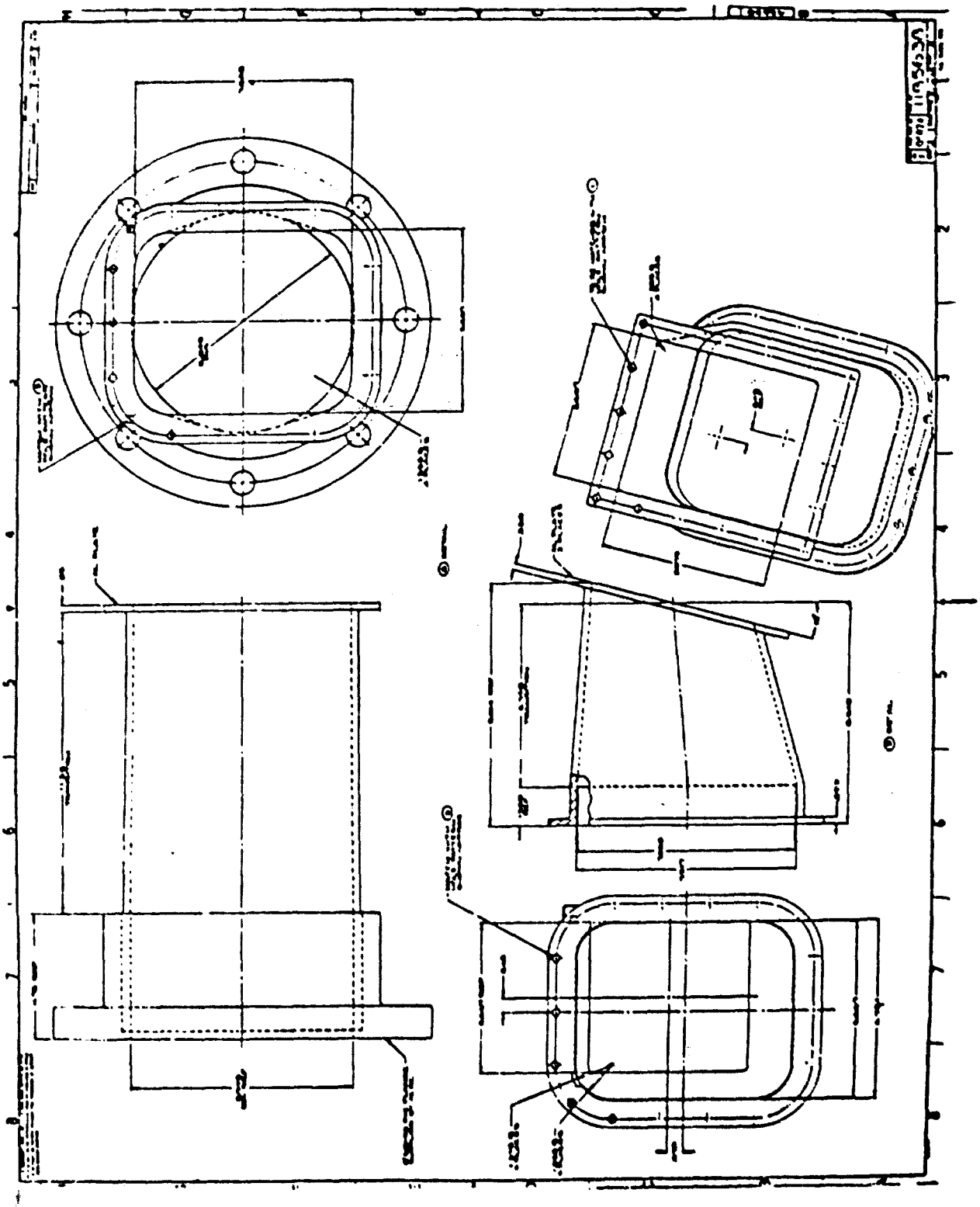

Figure 101 JEEF(A) DIFFUSER DETAILS, CONFIGURATION 5, ALRC DRAWING 185638-4

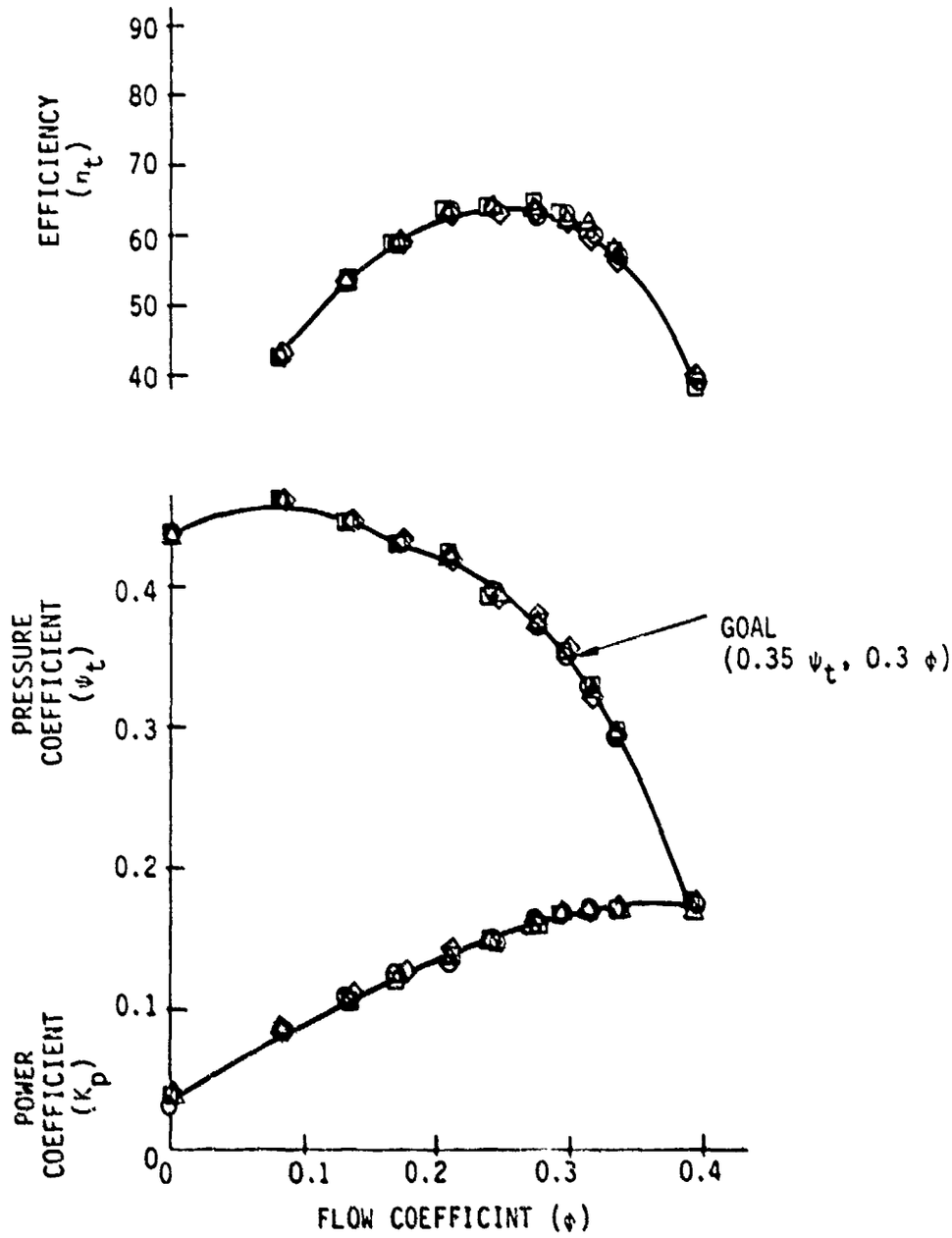

Figure 102 CONFIGURATION 5 PERFORMANCE COMPOSITE

TABLE 21. FAN SPEED 2500 RPM, CONFIGURATION 5*

CENTRIFUGAL FAN TEST DATA REDUCTION PROGRAM
****

(AMCA STANDARD 210-67, FIGURE 4.3)

VOLUTE TYPE - MERA-B
U/BD**2 = 6.75
VOLUTE EXIT AREA = 114.10 SQ.

IMPELLER OUTSIDE DIAMETER (INCHES)	12.000
IMPELLER WIDTH FACTOR (SINGLE WIDTH FAN)	0.217
IMPELLER INSIDE DIAMETER (INCHES)	7.982
IMPELLER EXIT BLADE ANGLE (DEGREES)	61.500
NOZZLE DIAMETER (INCHES)	6.994
INCLINATION OF MANOMETER BANKS (DEGREES)	11.533
INCLINATION OF DIFF. MAN. (DEGREES)	11.533
TORQUE ARM LENGTH (INCHES)	10.000
DUCT AREA TO CHAMBER (SQFT)	0.792
DUCT AREA UPSTREAM OF NOZZLE (SQFT)	15.500

BAROMETER HEIGHT (INCHES OF MERCURY)	29.620
AMBIENT AIR TEMPERATURE (DEGREES F)	64.500
WET BULB TEMPERATURE (DEGREES F)	56.500
WATER DENSITY (LBS/CUFT)	62.340
AMBIENT AIR DENSITY (LBS/CUFT)	0.07456

FAN SPEED = 2500 RPM
****

PHI	FHI	PSI TOTAL	PSI STATIC	ETA TOTAL	ETA STATIC	FLOW CFM	PRESS TOTAL IN WG	PRESS STATIC IN WG	POWER HP	NF
0.0	0.0	0.4381	0.4381	0.0	0.0	0.0	3.349	3.349	0.246	0.038
0.0813	0.0707	0.4622	0.4598	0.4161	0.4139	436.2	3.533	3.515	0.583	0.090
0.1298	0.1129	0.4456	0.4394	0.5231	0.5158	696.5	3.406	3.359	0.714	0.111
0.1683	0.1464	0.4276	0.4171	0.5801	0.5659	903.2	3.269	3.189	0.801	0.124
0.2083	0.1812	0.4193	0.4033	0.6157	0.5921	1117.9	3.205	3.083	0.916	0.142
0.2392	0.2081	0.3951	0.3740	0.6255	0.5921	1283.6	3.021	2.859	0.976	0.151
0.2676	0.2345	0.3768	0.3499	0.6361	0.5907	1446.6	2.881	2.675	1.031	0.160
0.2942	0.2560	0.3524	0.3204	0.6276	0.5705	1578.9	2.694	2.449	1.067	0.165
0.3134	0.2727	0.3301	0.2937	0.6262	0.5572	1682.1	2.523	2.245	1.067	0.165
0.3321	0.2889	0.2979	0.2571	0.5815	0.5018	1782.0	2.278	1.965	1.099	0.170
0.3921	0.3411	0.1761	0.1190	0.4073	0.2752	2104.1	1.346	0.910	1.095	0.170

*See figure 103.

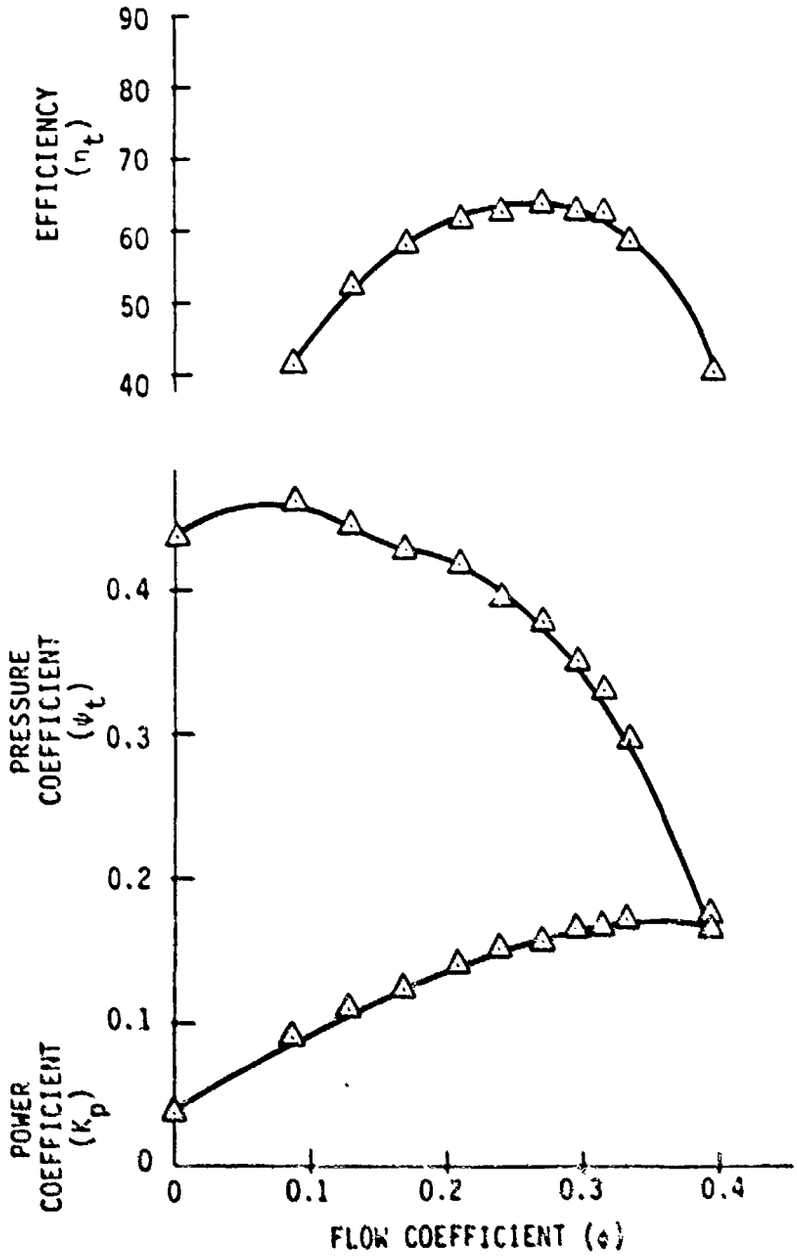

Figure 103 CONFIGURATION 5 PERFORMANCE, 2500 RPM

TABLE 22. FAN SPEED 3000 RPM, CONFIGURATION 5*

CENTRIFUGAL FAN TEST DATA REDUCTION PROGRAM
****

(AMCA STANDARD 210-67, FIGURE 4.3)

VOLUTE TYPE - HERA-B
U/BD**2 = 6.75
VOLUTE EXIT AREA = 114.10 SQ. IN.

IMPELLER OUTSIDE DIAMETER (INCHES)	12.000
IMPELLER WIDTH FACTOR (SINGLE WIDTH FAN)	0.217
IMPELLER INSIDE DIAMETER (INCHES)	7.982
IMPELLER EXIT BLADE ANGLE (DEGREES)	61.500
NOZZLE DIAMETER (INCHES)	6.994
INCLINATION OF MANOMETER BANKS (DEGREES)	11.533
INCLINATION OF DIFF. MAN. (DEGREES)	11.533
TORQUE ARM LENGTH (INCHES)	10.000
DUCT AREA TO CHAMBER (SQFT)	0.792
DUCT AREA UPSTREAM OF NOZZLE (SQFT)	15.500

BAROMETER HEIGHT (INCHES OF MERCURY)	29.620
AMBIENT AIR TEMPERATURE (DEGREES F)	65.000
WET BULB TEMPERATURE (DEGREES F)	56.000
WATER DENSITY (LBS/CUFT)	62.337
AMBIENT AIR DENSITY (LBS/CUFT)	0.07451

FAN SPEED = 3000 RPM
****

PHI	FHI	PSI TOTAL	PSI STATIC	ETA TOTAL	ETA STATIC	FLOW CFM	PRESS TOTAL IN WG	PRESS STATIC IN WG	POWER HP	NP
0.0	0.0	0.4362	0.4362	0.0	0.0	0.0	4.798	4.798	0.314	0.028
0.0809	0.0704	0.4622	0.4598	0.4272	0.4250	520.8	5.085	5.058	0.976	0.087
0.1314	0.1143	0.4452	0.4389	0.5439	0.5361	846.1	4.898	4.828	1.200	0.108
0.1682	0.1464	0.4302	0.4198	0.5888	0.5746	1083.4	4.733	4.618	1.371	0.123
0.2074	0.1804	0.4211	0.4053	0.6334	0.6096	1335.3	4.633	4.458	1.537	0.138
0.2379	0.2069	0.3952	0.3744	0.6366	0.6030	1531.8	4.348	4.119	1.647	0.148
0.2730	0.2375	0.3746	0.3471	0.6289	0.5827	1758.0	4.121	3.819	1.814	0.163
0.2949	0.2565	0.3529	0.3208	0.6235	0.5668	1899.0	3.882	3.529	1.861	0.167
0.3147	0.2735	0.3264	0.2899	0.6069	0.5390	2024.2	3.590	3.189	1.885	0.169
0.3314	0.2883	0.2923	0.2517	0.5703	0.4911	2134.4	3.216	2.769	1.894	0.170
0.3926	0.3415	0.1753	0.1181	0.3971	0.2676	2528.2	1.928	1.300	1.933	0.173

*See figure 104.

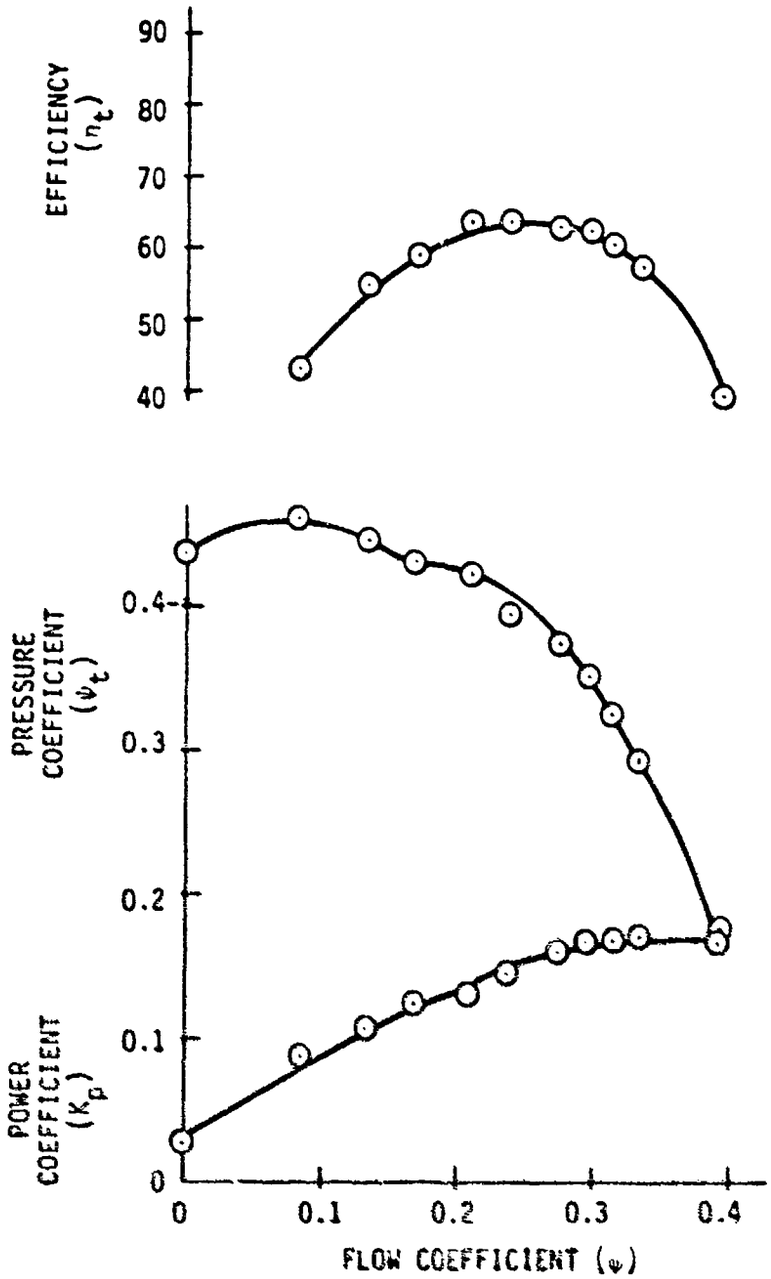

Figure 104 CONFIGURATION 5 PERFORMANCE, 3000 RPM

TABLE 23. FAN SPEED 3500 RPM, CONFIGURATION 5*

CENTRIFUGAL FAN TEST DATA REDUCTION PROGRAM
****

(AMCA STANDARD 210-67, FIGURE 4.3)

VOLUTE TYPE - HERA-R
U/BD**2 = 6.75
VOLUTE EXIT AREA = 114.10 SQ. IN.

IMPELLER OUTSIDE DIAMETER (INCHES)	12.000
IMPELLER WIDTH FACTOR (SINGLE WIDTH FAN)	0.217
IMPELLER INSIDE DIAMETER (INCHES)	7.982
IMPELLER EXIT BLADE ANGLE (DEGREES)	61.500
NOZZLE DIAMETER (INCHES)	6.994
INCLINATION OF MANOMETER BANKS (DEGREES)	11.533
INCLINATION OF DIFF. MAN. (DEGREES)	11.533
TORQUE ARM LENGTH (INCHES)	10.000
DUCT AREA TO CHAMBER (SQFT)	0.792
DUCT AREA UPSTREAM OF NOZZLE (SQFT)	15.500

BAROMETER HEIGHT (INCHES OF MERCURY)	29.620
AMBIENT AIR TEMPERATURE (DEGREES F)	65.000
WET BULB TEMPERATURE (DEGREES F)	56.000
WATER DENSITY (LBS/CUFT)	62.337
AMBIENT AIR DENSITY (LBS/CUFT)	0.07451

FAN SPEED = 3500 RPM
****

PHI	FHI	PSI TOTAL	PSI STATIC	ETA TOTAL	ETA STATIC	FLOW CFM	PRESS TOTAL IN WG	PRESS STATIC IN WG	POWER HP	NF
0.0	0.0	0.4373	0.4373	0.0	0.0	0.0	6.548	6.548	0.678	0.038
0.0801	0.0697	0.4603	0.4580	0.4261	0.4240	602.0	6.893	6.858	1.533	0.087
0.1310	0.1140	0.4467	0.4403	0.5395	0.5318	984.5	6.688	6.594	1.921	0.108
0.1684	0.1465	0.4303	0.4199	0.5881	0.5738	1265.2	6.444	6.288	2.182	0.123
0.2075	0.1805	0.4211	0.4052	0.6361	0.6122	1559.0	6.305	6.068	2.432	0.137
0.2392	0.2081	0.3929	0.3719	0.6364	0.6023	1797.4	5.884	5.568	2.616	0.148
0.2726	0.2372	0.3739	0.3465	0.6374	0.5906	2048.3	5.598	5.188	2.832	0.160
0.2942	0.2560	0.3524	0.3204	0.6273	0.5705	2210.4	5.276	4.798	2.927	0.165
0.3117	0.2711	0.3283	0.2924	0.6087	0.5422	2341.6	4.916	4.378	2.977	0.168
0.3307	0.2877	0.2941	0.2537	0.5745	0.4955	2484.9	4.404	3.799	2.999	0.169
0.3882	0.3378	0.1728	0.1168	0.3904	0.2639	2916.9	2.587	1.749	3.043	0.172

*See figure 105.

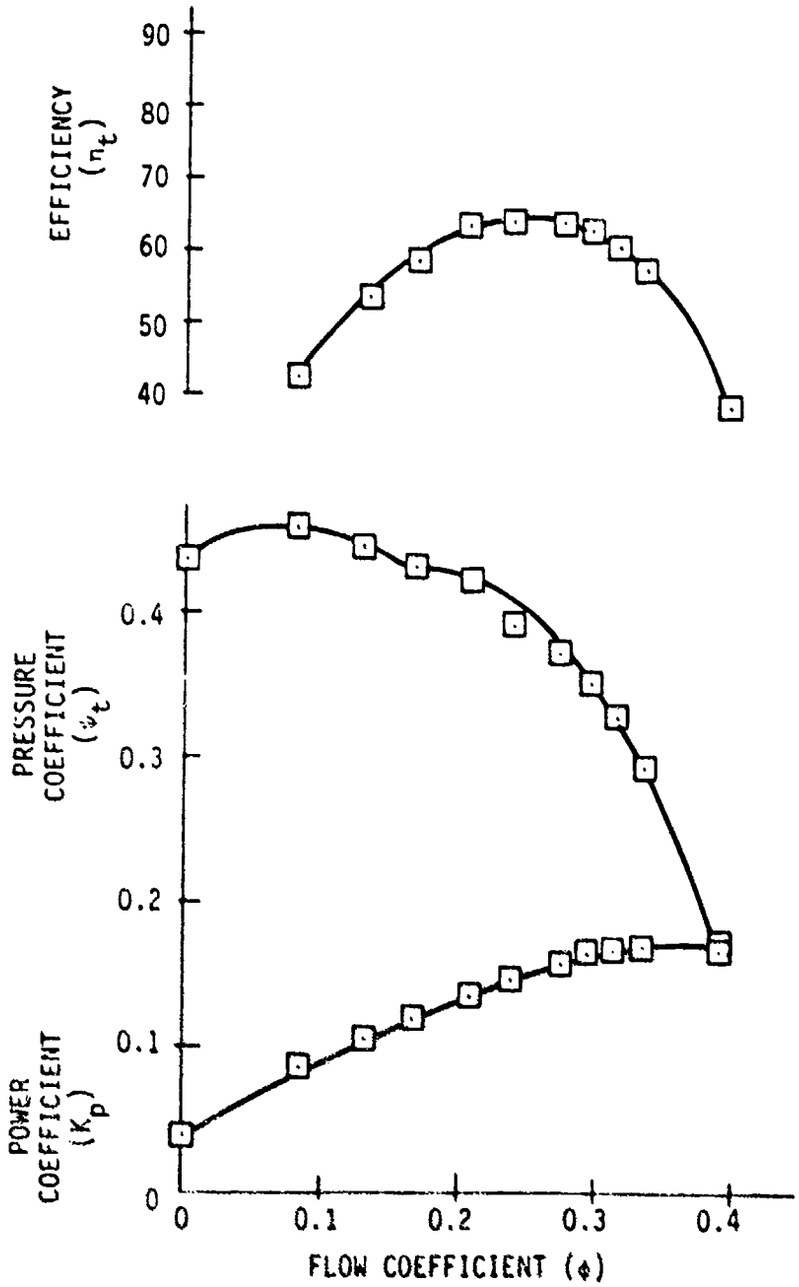

Figure 105 CONFIGURATION 5 PERFORMANCE, 3500 RPM

TABLE 24. FAN SPEED 4000 RPM, CONFIGURATION 5*

CENTRIFUGAL FAN TEST DATA REDUCTION PROGRAM
****

(AMCA STANDARD 210-67, FIGURE 4.3)

VOLUTE TYPE - HEBA-B
U BD**2 = 6.75
VOLUTE EXIT AREA = 114.10 SQ. IN.

IMPELLER OUTSIDE DIAMETER (INCHES)	12.000
IMPELLER WIDTH FACTOR (SINGLE WIDTH FAN)	0.217
IMPELLER INSIDE DIAMETER (INCHES)	7.982
IMPELLER EXIT BLADE ANGLE (DEGREES)	61.500
NOZZLE DIAMETER (INCHES)	6.994
INCLINATION OF MANOMETER BANKS (DEGREES)	11.533
INCLINATION OF DIFF. MAN. (DEGREES)	11.533
TORQUE ARM LENGTH (INCHES)	10.000
DUCT AREA TO CHAMBER (SQFT)	0.792
DUCT AREA UPSTREAM OF NOZZLE (SQFT)	15.500

BAROMETER HEIGHT (INCHES OF MERCURY)	29.620
AMBIENT AIR TEMPERATURE (DEGREES F)	65.500
WET BULB TEMPERATURE (DEGREES F)	56.000
WATER DENSITY (LBS/CUFT)	62.333
AMBIENT AIR DENSITY (LBS/CUFT)	0.07444

FAN SPEED = 4000 RPM
****

PHI	FHI	PSI TOTAL	PSI STATIC	ETA TOTAL	ETA STATIC	FLOW CFM	PRESS TOTAL IN WG	PRESS STATIC IN WG	POWER HP	NI
0.0	0.0	0.4374	0.4374	0.0	0.0	0.0	8.547	8.547	1.041	0.039
0.0816	0.0710	0.4618	0.4594	0.4262	0.4240	700.8	9.024	8.977	2.336	0.088
0.1326	0.1154	0.4454	0.4389	0.5308	0.5231	1138.6	8.703	8.577	2.938	0.111
0.1714	0.1492	0.4313	0.4205	0.5883	0.5736	1472.1	8.428	8.217	3.319	0.126
0.2091	0.1819	0.4197	0.4036	0.6220	0.5982	1795.1	8.201	7.887	3.725	0.141
0.2412	0.2099	0.3907	0.3693	0.6307	0.5961	2071.4	7.635	7.217	3.948	0.149
0.2729	0.2375	0.3742	0.3468	0.6306	0.5845	2343.6	7.313	6.778	4.278	0.162
0.2944	0.2561	0.3511	0.3192	0.6154	0.5595	2527.7	6.861	6.238	4.436	0.168
0.3123	0.2717	0.3234	0.2875	0.5962	0.5300	2681.4	6.320	5.618	4.474	0.169
0.3306	0.2876	0.2925	0.2522	0.5636	0.4859	2838.5	5.716	4.928	4.532	0.172

*See figure 106.

Best Available Copy

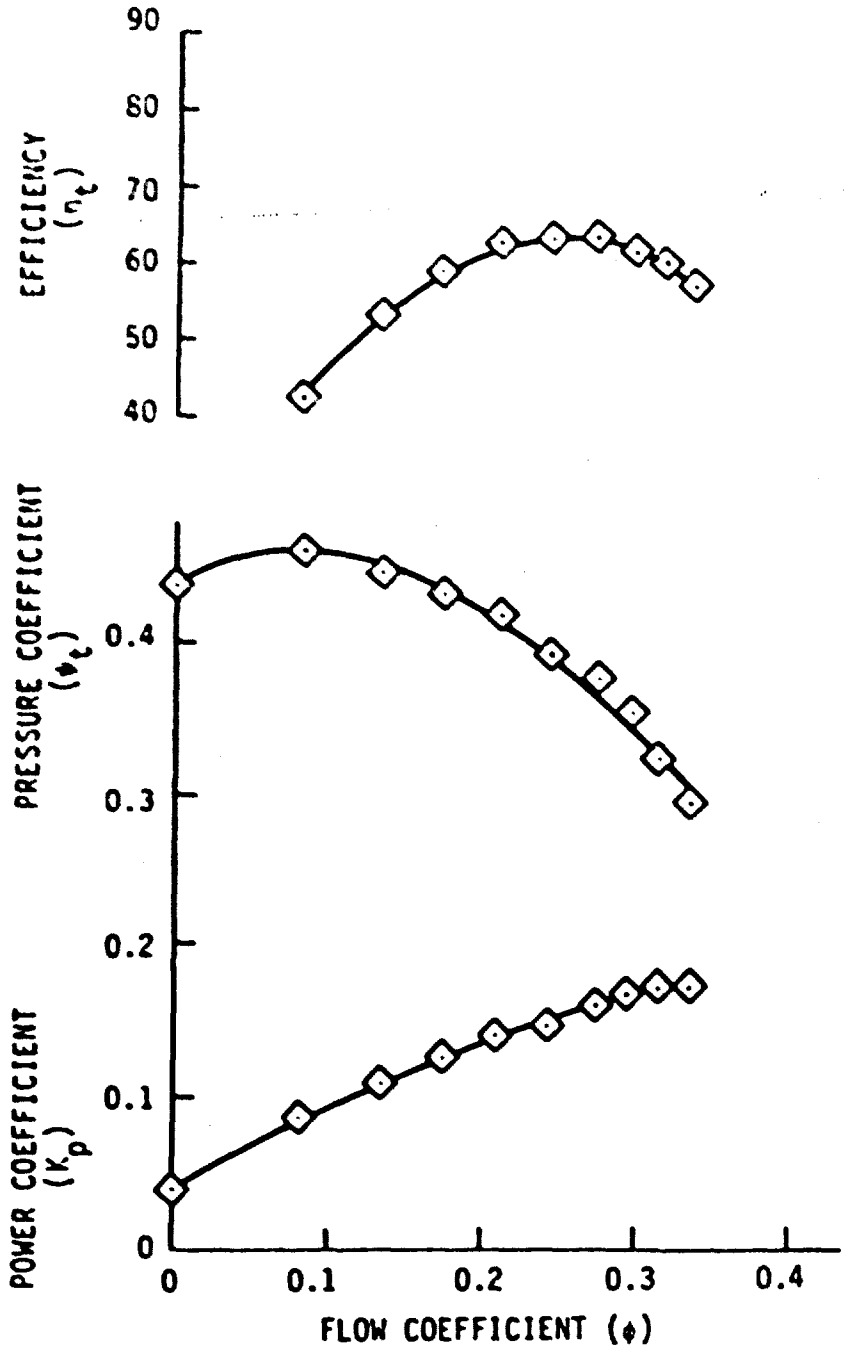

Figure 106 CONFIGURATION 5 PERFORMANCE, 4000 RPM

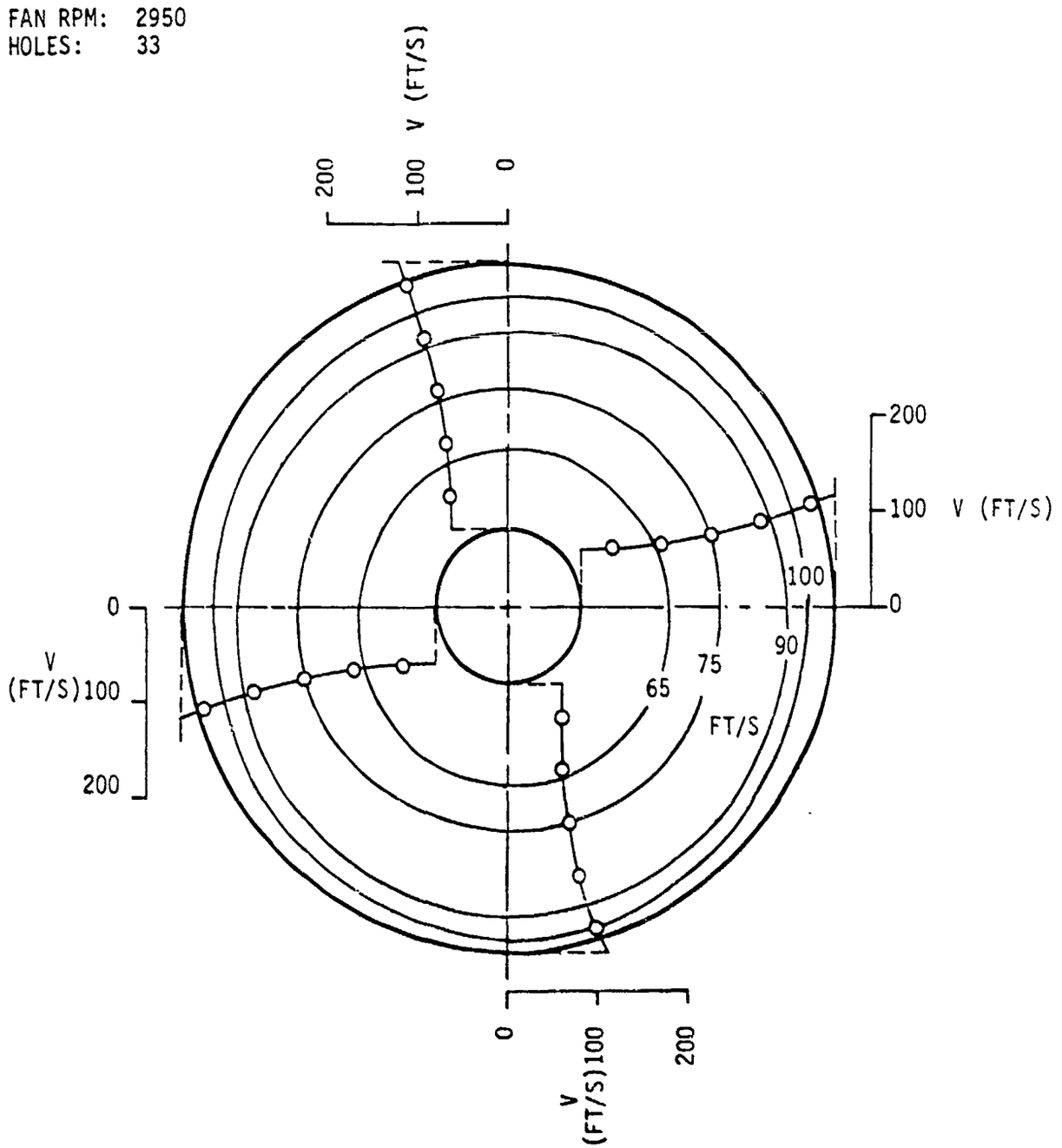

Figure 107 INLET BELLMOUTH VELOCITY SURVEY, OPERATING POINT A, CONFIGURATION 5

FAN RPM: 2950
HOLES: 39

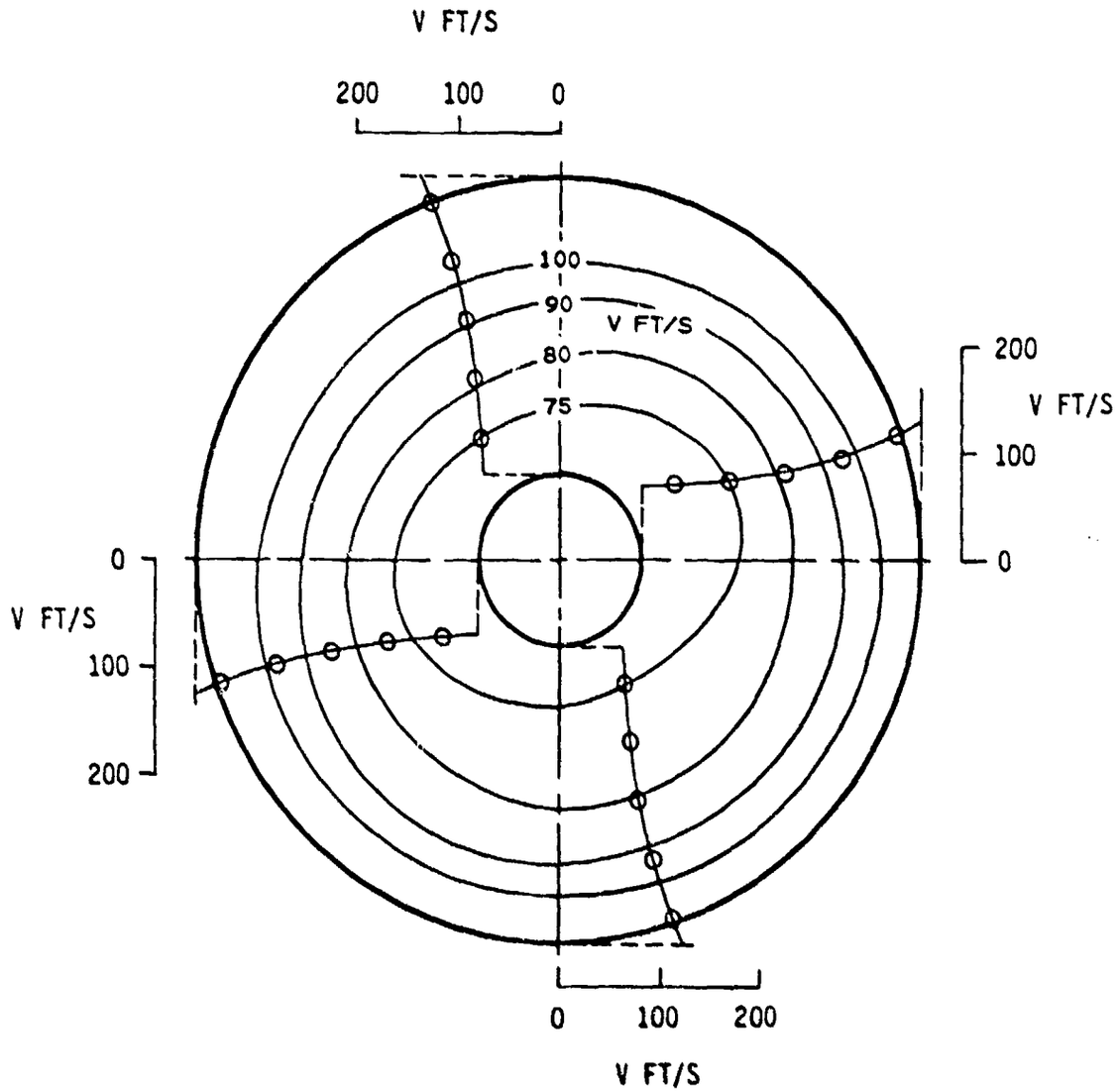

Figure 108 INLET BELLMOUTH VELOCITY SURVEY, OPERATING POINT B, CONFIGURATION 5

FAN RPM: 2950
HOLES: 50

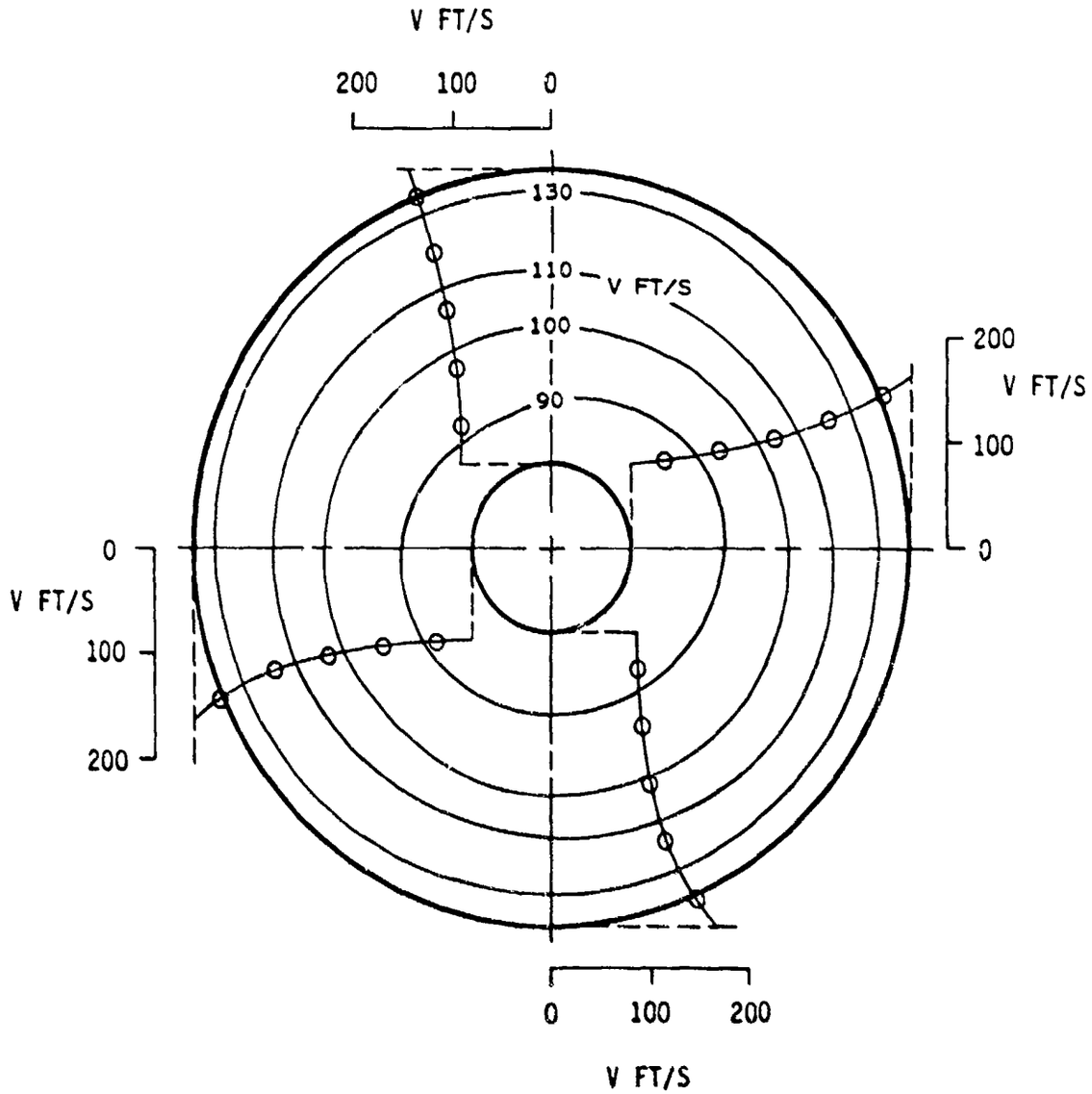

Figure 109 INLET BELLMOUTH VELOCITY SURVEY, OPERATING POINT C, CONFIGURATION 5

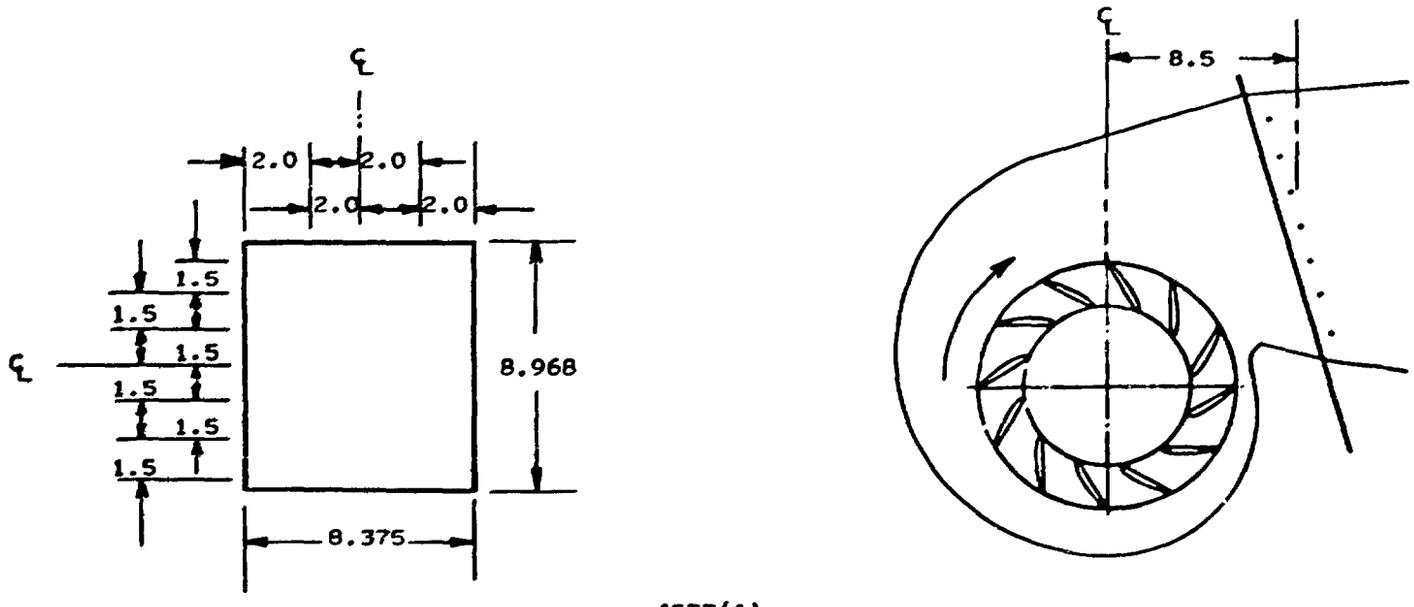

JEFF(A)

Figure 110 VOLUTE EXIT PLANE PRESSURE MEASUREMENT LOCATIONS, CONFIGURATION 5

Bell Aerospace TEXTRON
Division of Textron Inc

FAN RPM: 3000

VIEW LOOKING INTO DIFFUSER FROM VOLUTE

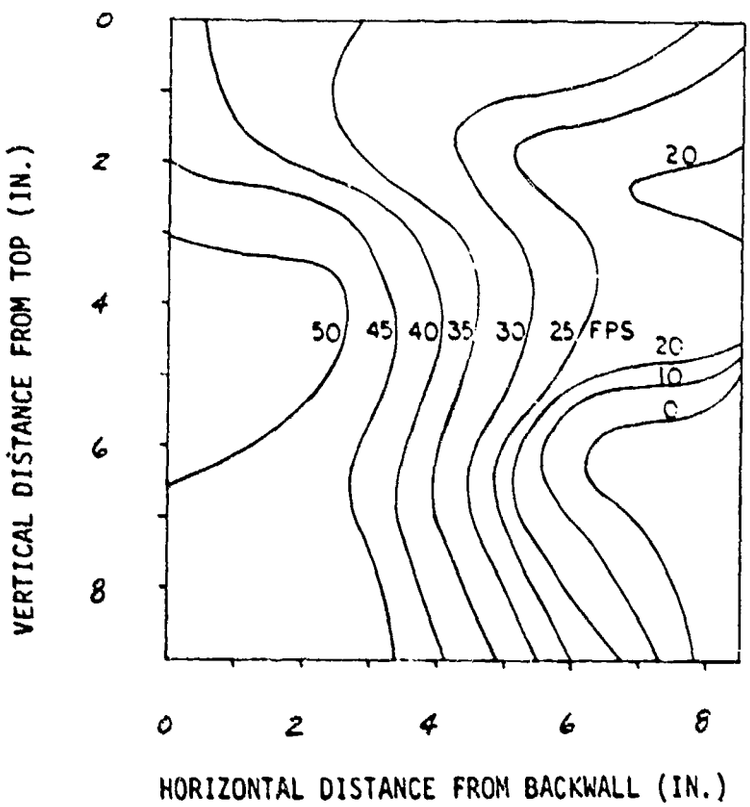

Figure 111 VOLUTE EXIT PLANE VELOCITY SURVEY, OPERATING POINT A, CONFIGURATION 5

FAN RPM: 3000

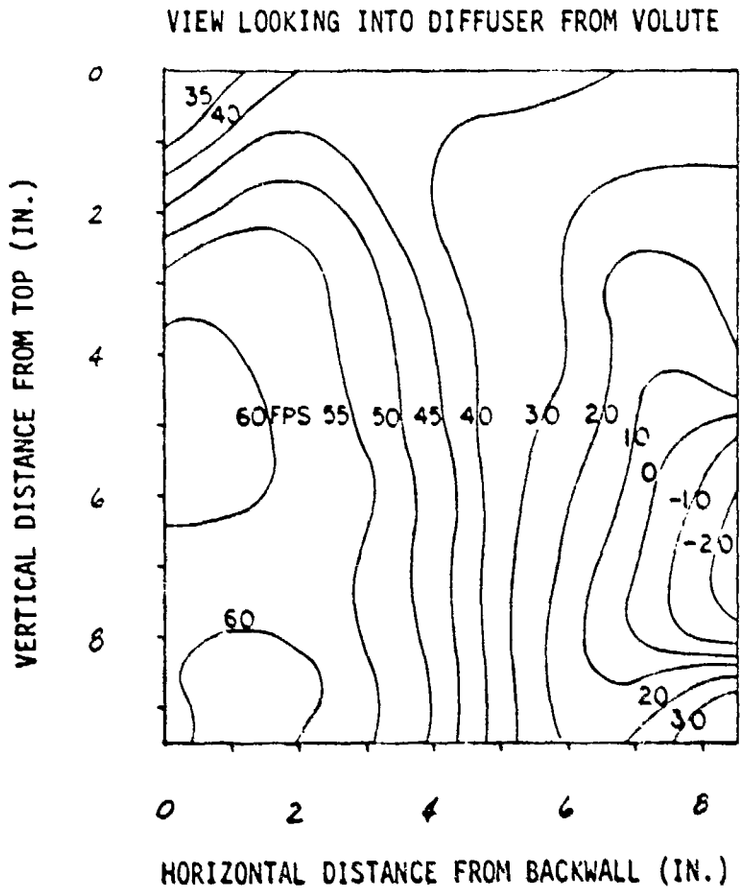

Figure 112 VOLUTE EXIT PLANE VELOCITY SURVEY, OPERATING POINT B, CONFIGURATION 5

FAN RPM: 3000

VIEW LOOKING INTO DIFFUSER FROM VOLUTE

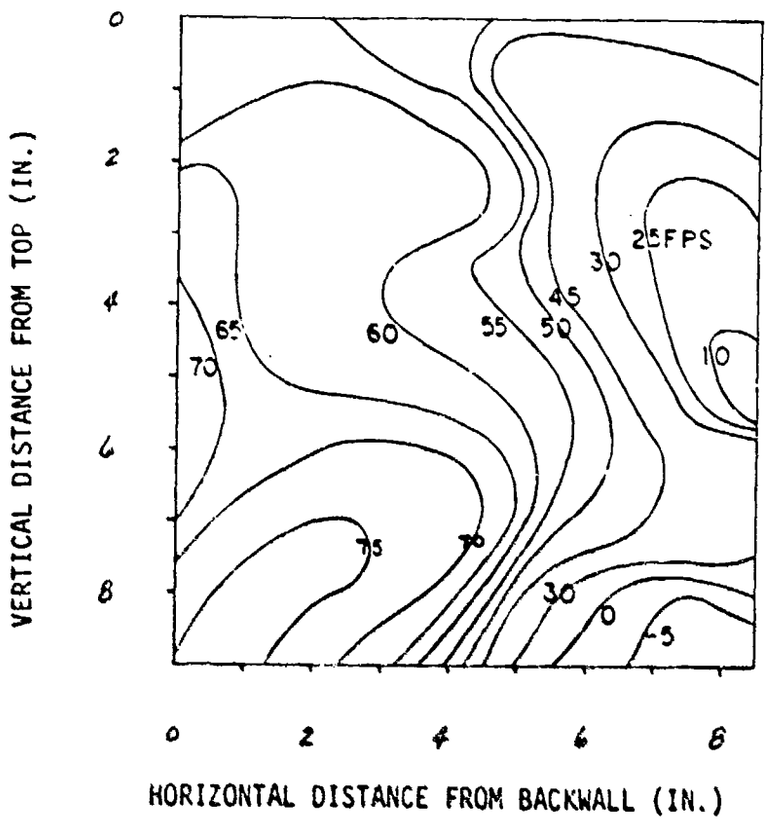

Figure 113 VOLUTE EXIT PLANE VELOCITY SURVEY, OPERATING POINT C, CONFIGURATION 5

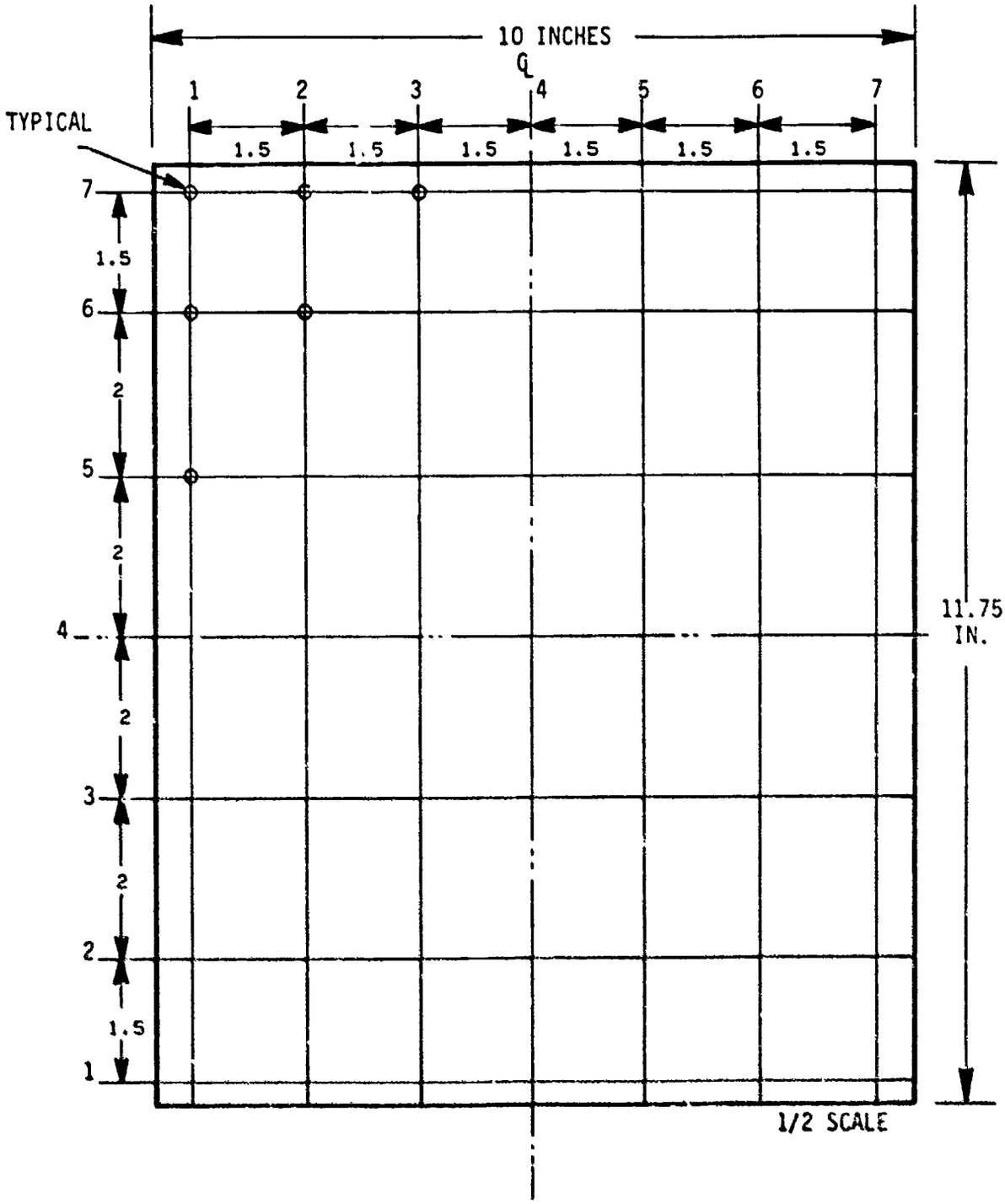

Figure 114 DIFFUSER EXIT PLANE PRESSURE MEASUREMENT LOCATIONS, CONFIGURATION 5

FAN RPM: 3000

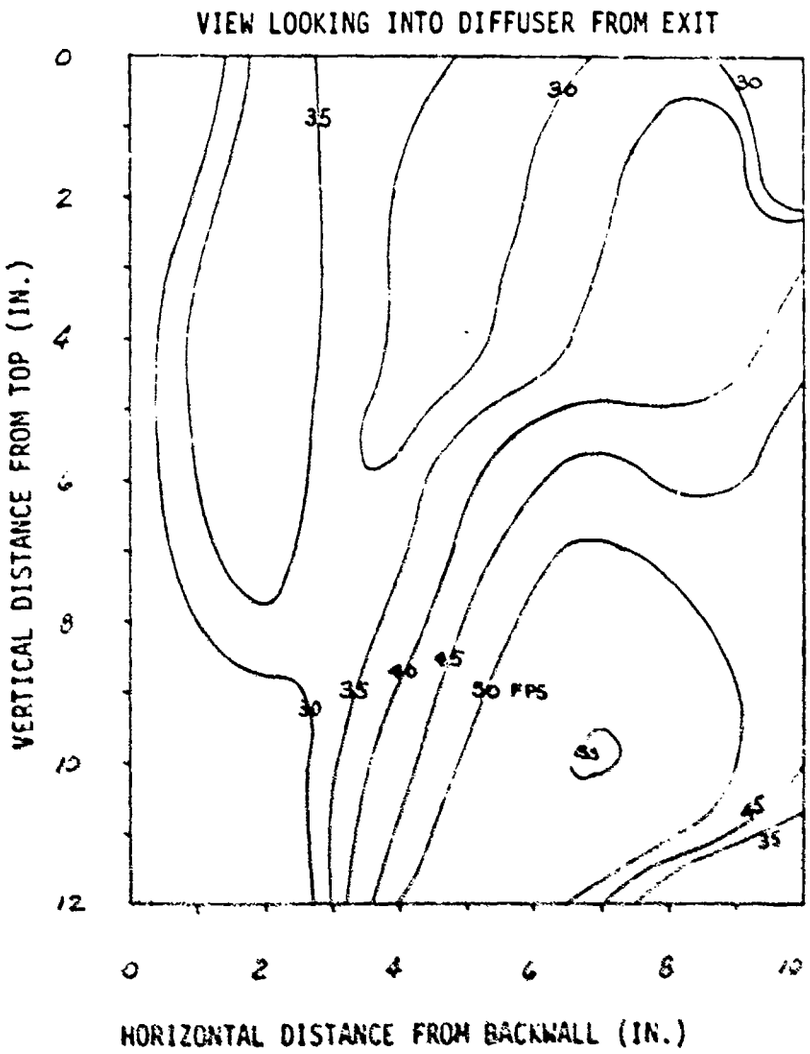

Figure 115 DIFFUSER EXIT PLANE SURVEY,
OPERATING POINT B, CONFIGURATION 5

FAN RPM: 3000

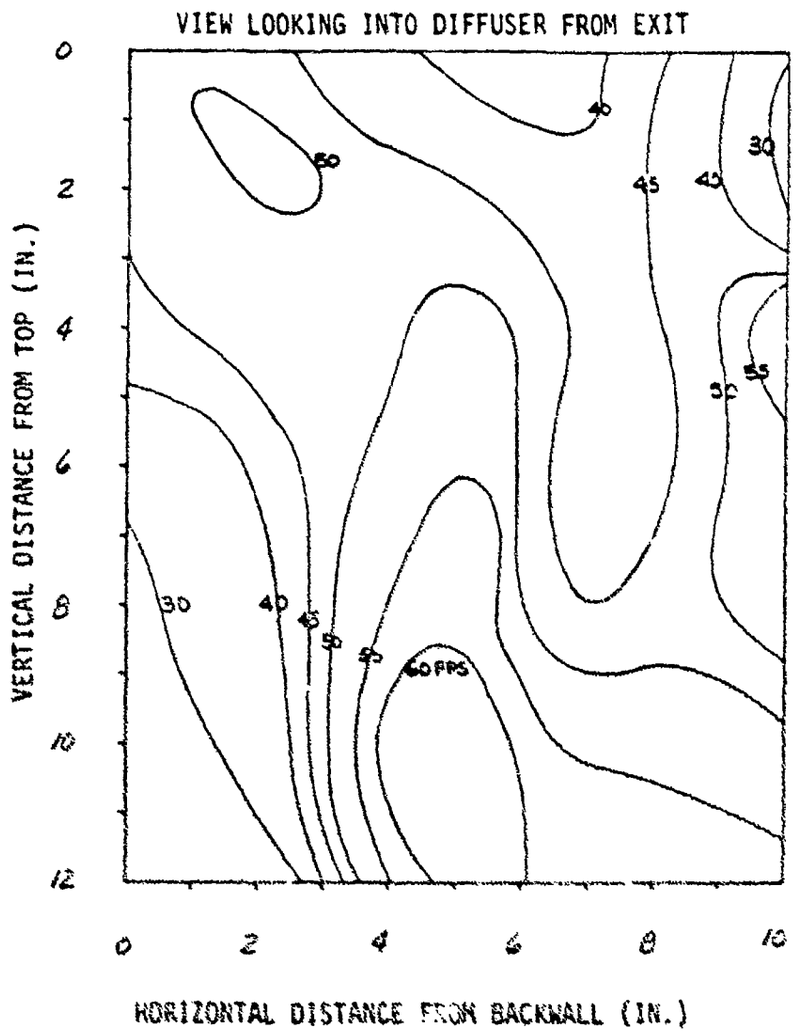

Figure 116 DIFFUSER EXIT PLANE SURVEY,
OPERATING POINT C, CONFIGURATION 5

FAN RPM: 3000

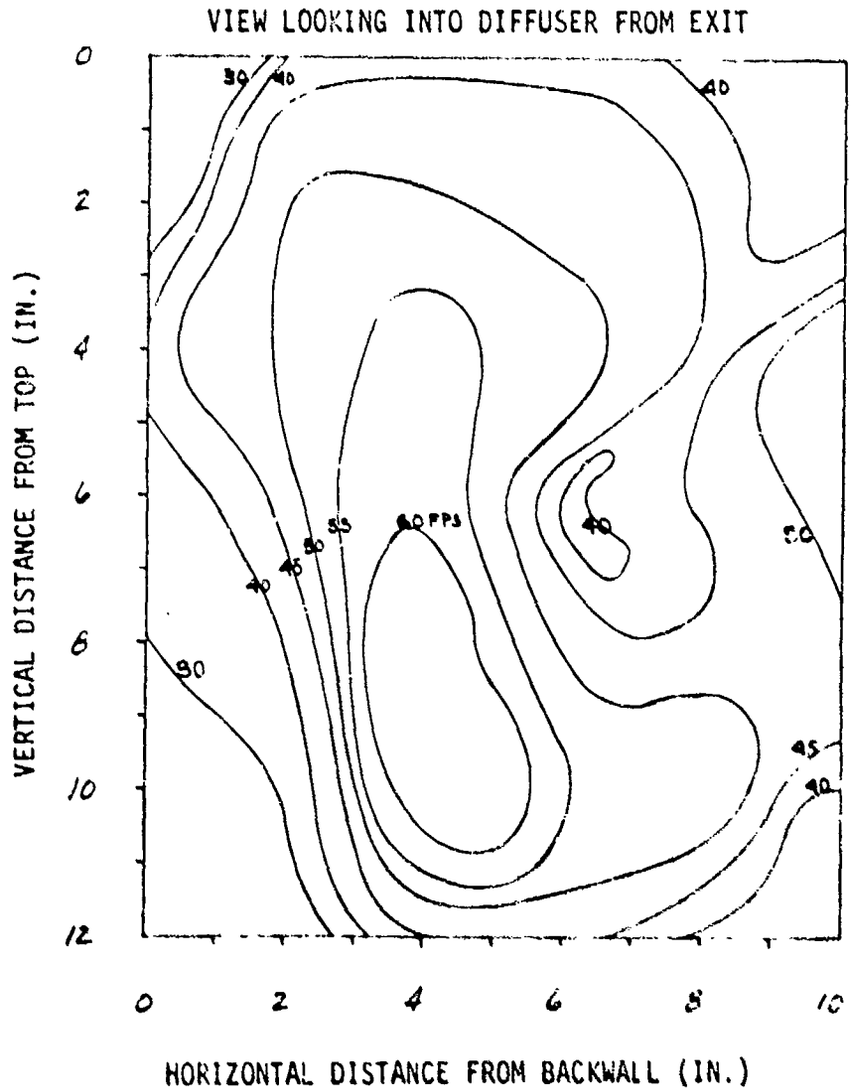

Figure 117 OTHER DIFFUSER EXIT PLANE SURVEY, OPERATING POINT C, CONFIGURATION 5

FAN RPM: 2500

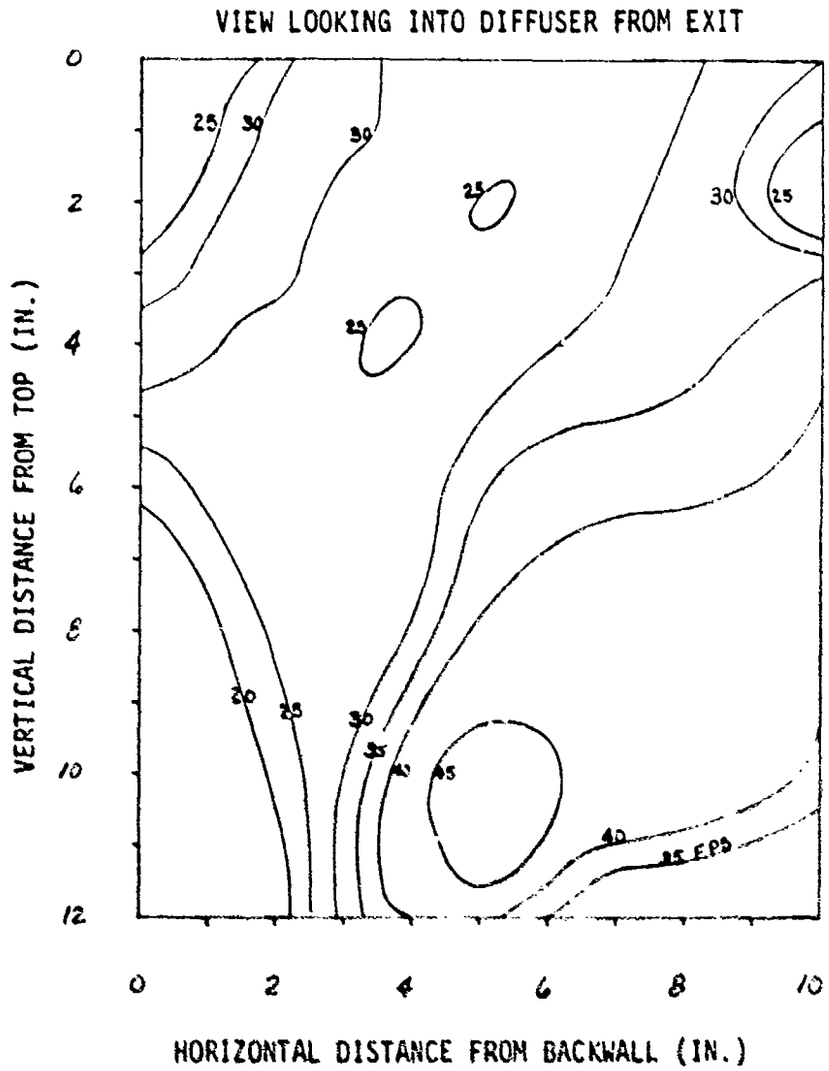

Figure 118 DIFFUSER EXIT PLANE SURVEY, OPERATING POINT D, CONFIGURATION 5

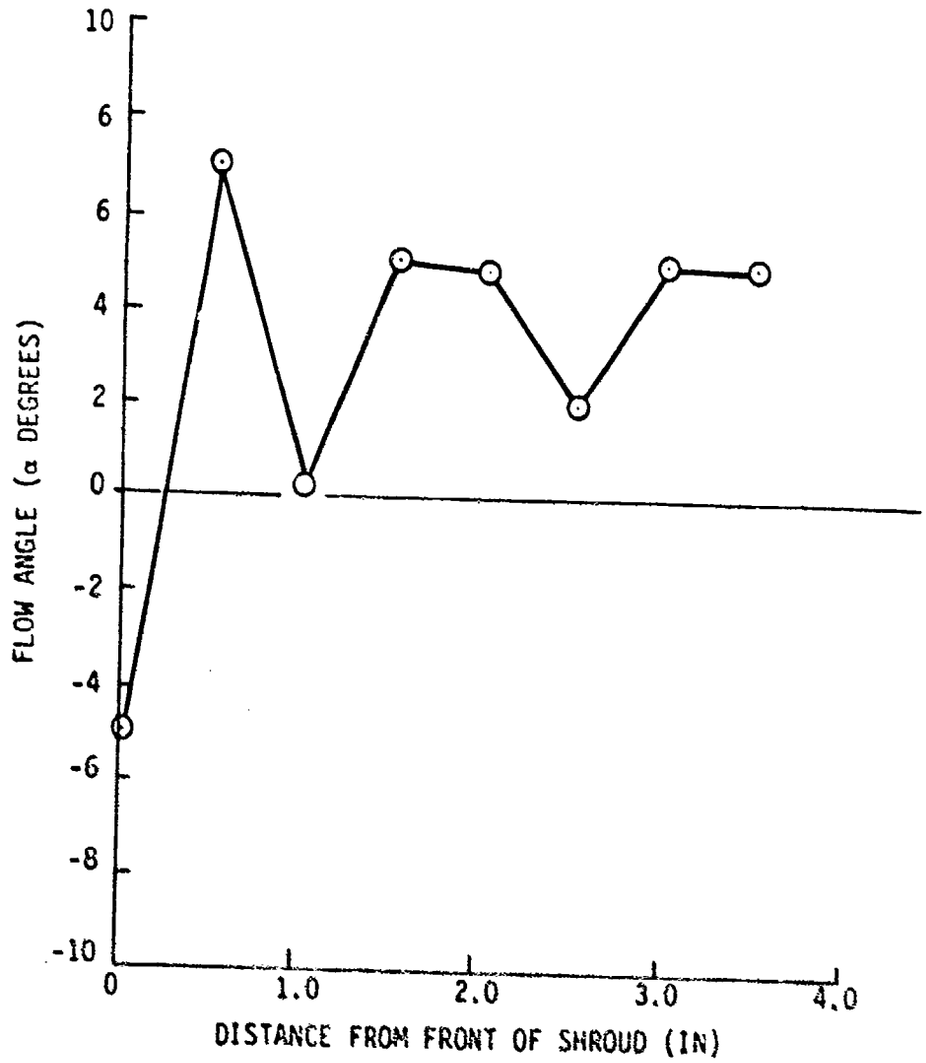

Figure 119 IMPELLER BLADE INLET FLOW ANGLE SURVEY, OPERATING POINT B, CONFIGURATION 5

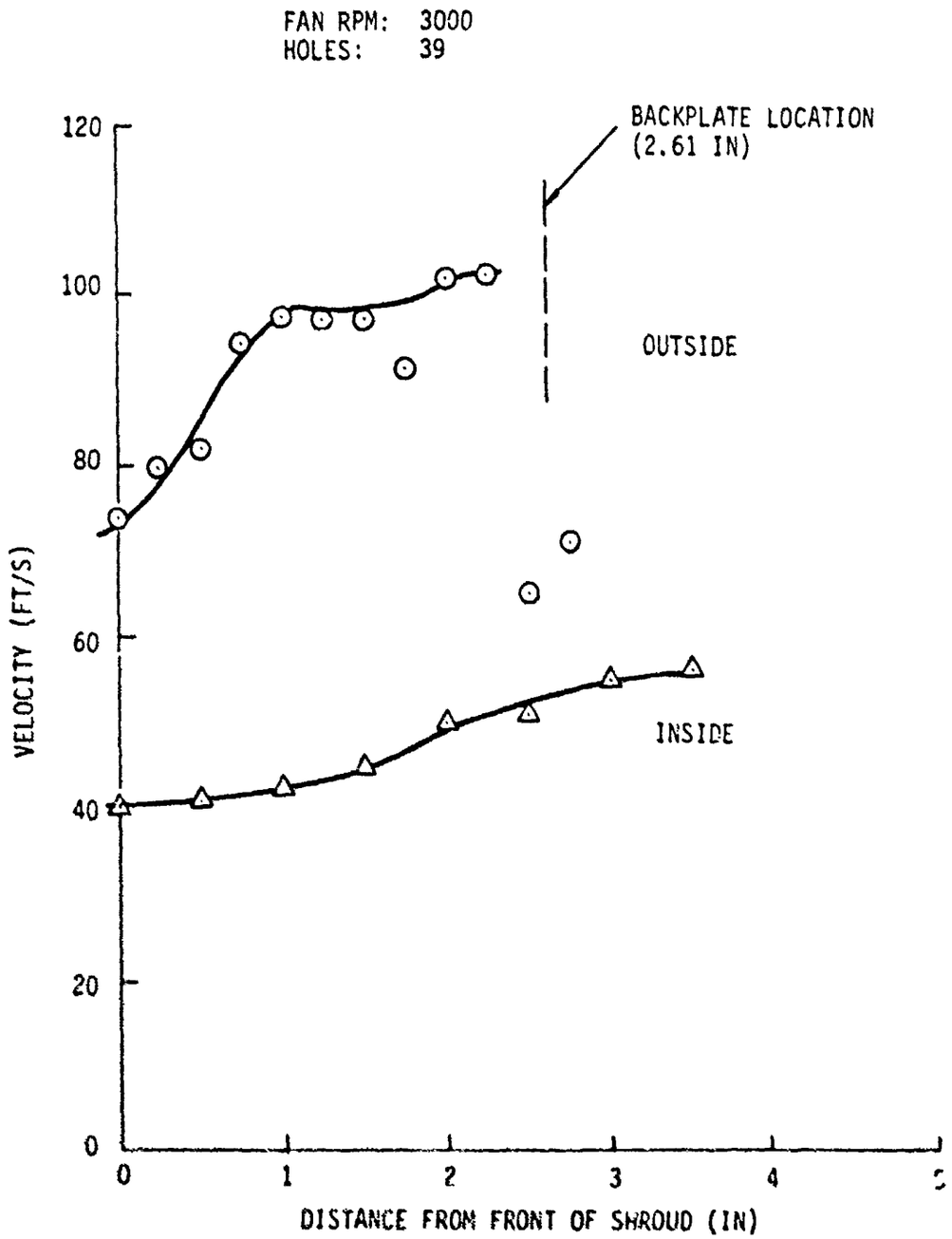

Figure 120 IMPELLER BLADE VELOCITY SURVEY, OPERATING POINT B, CONFIGURATION 5

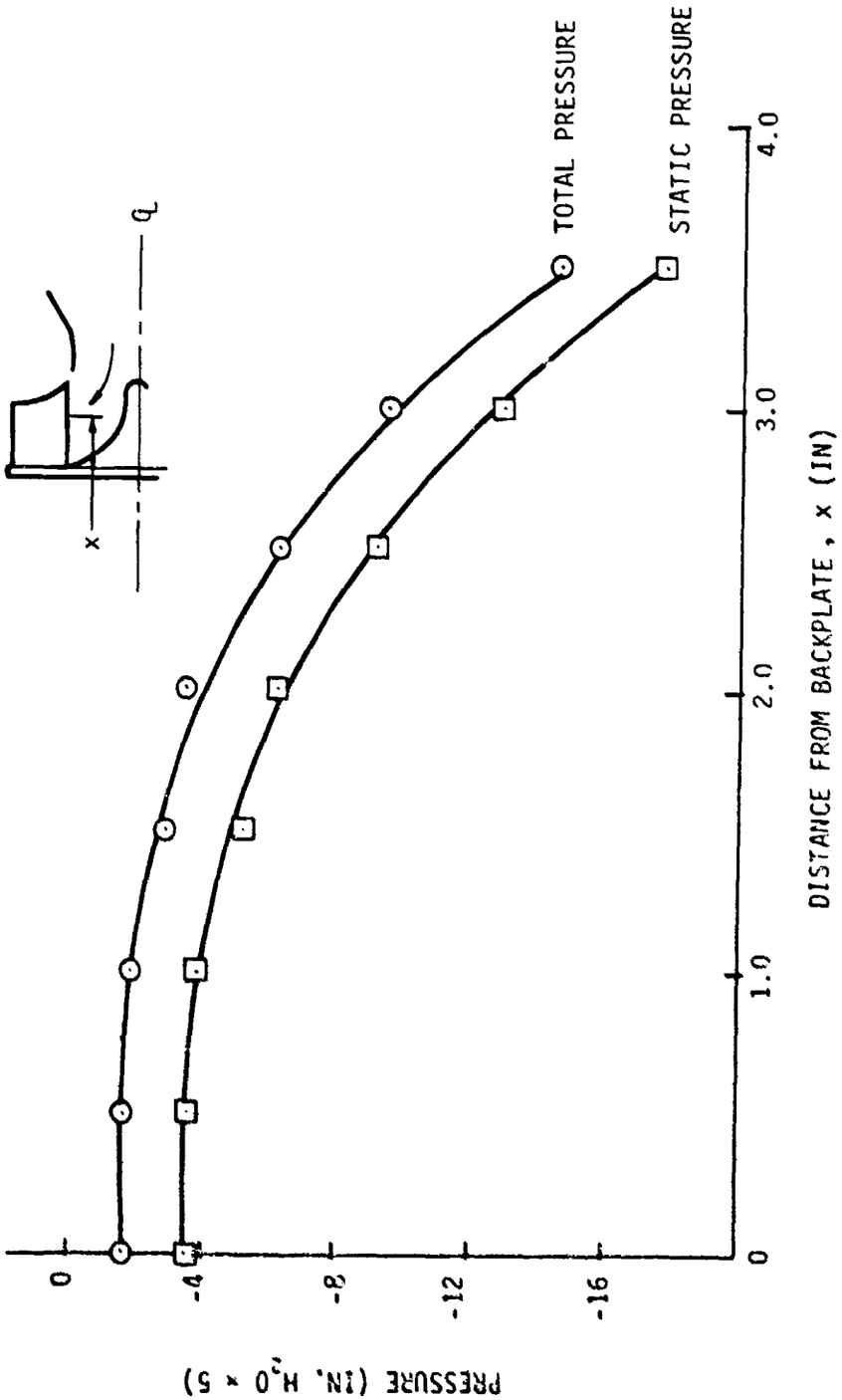

Figure 121 IMPELLER BLADE INLET PRESSURE SURVEY, OPERATING POINT B, CONFIGURATION 5

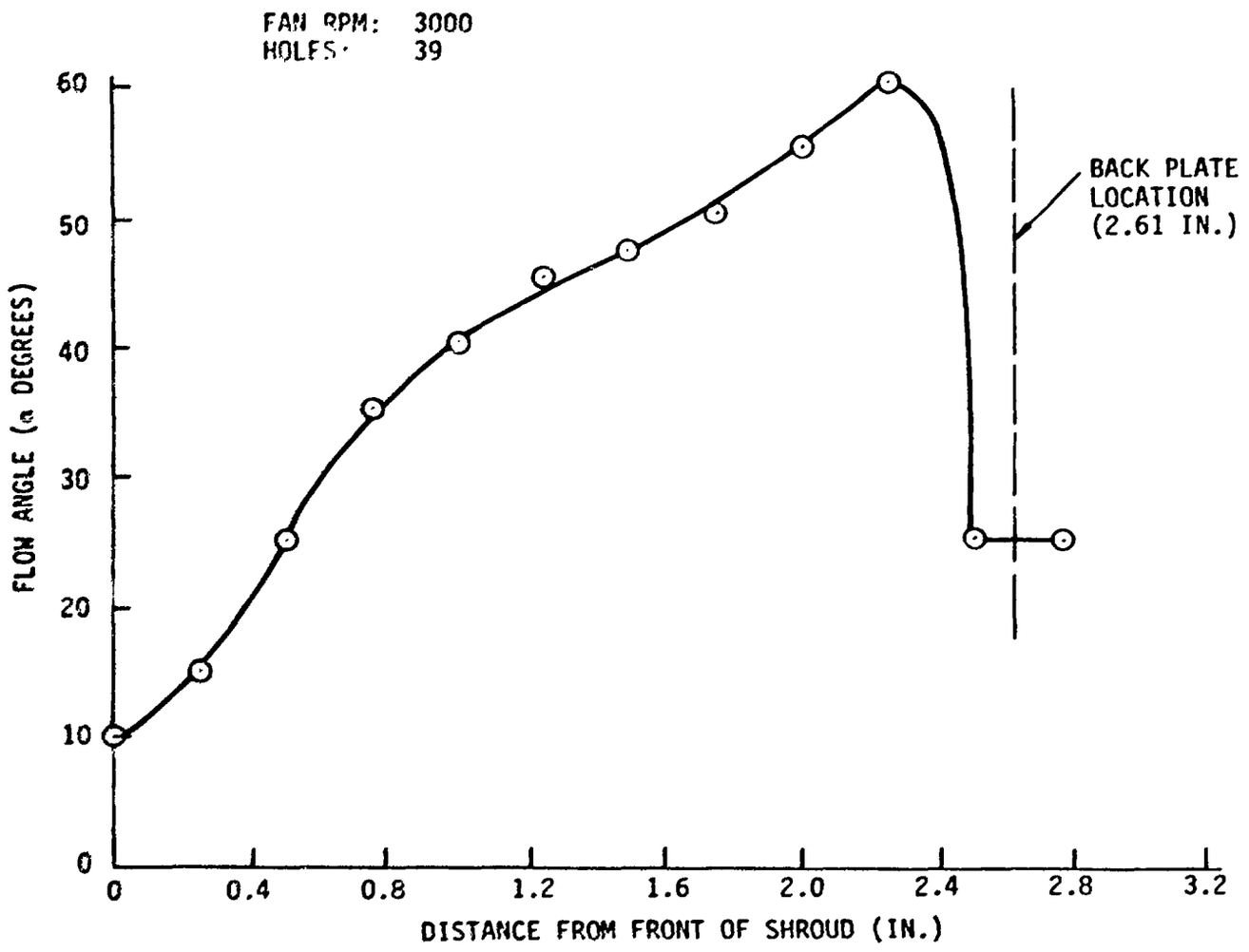

Figure 122 IMPELLER BLADE EXIT FLOW ANGLE, OPERATING POINT B, CONFIGURATION 5

Bell Aerospace TEXTRON
Division of Textron Inc

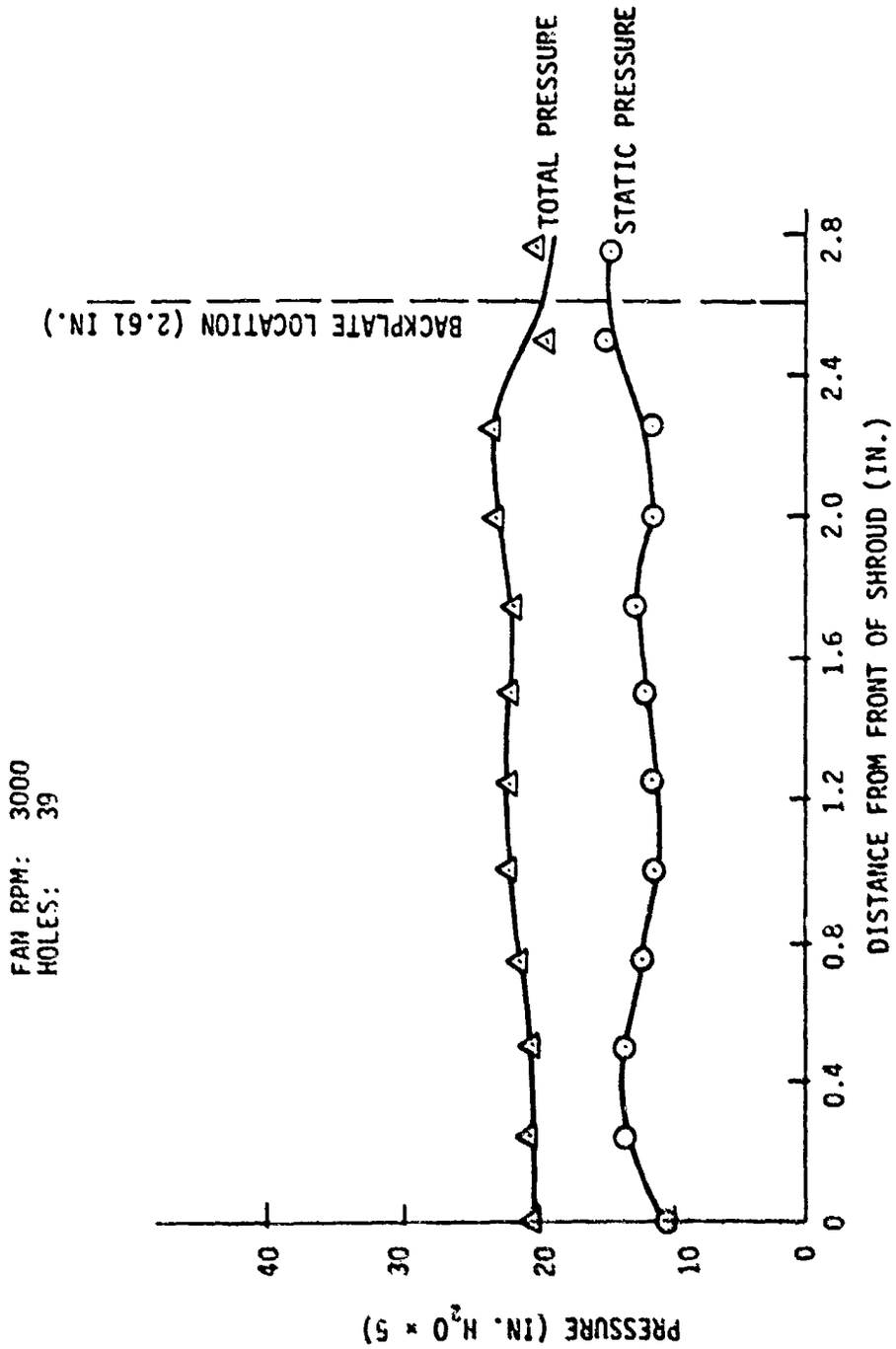

Figure 123 IMPELLER BLADE EXIT PRESSURE SURVEY, OPERATING POINT B, CONFIGURATION 5

6. DISCUSSION OF RESULTS

This program led to the accumulation of a very large amount of data, and time forbids detailed discussion of all of the information obtained. Accordingly, only the main features and items of special interest will be included in this section.

Sections 4 and 5 contain the detailed definition of the five configurations tested with the 12-inch-diameter JEFF(B) single-width model impeller, and tabulations and plots of the results.

PERFORMANCE AND EFFICIENCY

The performance plots are presented both as composites of all the fan speeds tested for each configuration, and as individual plots for each fan speed. The actual test points are clearly shown so that the detailed features of the nondimensional characteristics are brought out. Figures 124 through 126 show comparisons of performance for the different configurations. Figure 127 is a comparison of blade exit velocities. It will be noted that for Configurations 3, 4, and 5, which were radically different in volute shape, the nondimensional pressure flow curves exhibit a depression or dip at a flow coefficient of 0.15 to 0.175. This feature appears to be absent from Configurations 1 and 2, although Configurations 2 and 3 are far more similar than Configurations 3, 4, and 5. Such a dip in the pressure flow curve is usually attributed to blade stall. However, in the present application, it is of no consequence because of its mildness, and because it occurs far from the design operating point (flow coefficient approximately 0.3).

To facilitate comparison of the various characteristics, and to enable machine plots to be rapidly executed, the pressure flow curves in the region of low flow (flow coefficients less than 0.2) have been faired. This action greatly reduced the amount of labor required to prepare the plots in this section and in the following section, which deals with full-scale performance predictions for possible AALC use.

Figure 124 shows a comparison of the characteristics, based on composite curves for all fan speeds for Configurations 1, 2, and 3. It will be noted that successive modifications to the model test rig volute, originally designed for a different type of impeller, brought the pressure flow characteristics close to the full-scale design goal (flow coefficient 0.3, pressure coefficient 0.35). At the same time, the efficiency increased from approximately 60 to 66 percent. It should also be noted that the flow coefficient at which the maximum efficiency occurs increased from approximately 0.235 to 0.265. Figure 128, which shows the effect of Reynolds number on fan efficiency, is discussed in section 7 and appears on page 182. Figures 129 through 134 are taken from the proposal[3] for this study, and are included in section 7,

[3] *Plan for Alternate Lift Fan Impellers for the AALC JEFF(A)* (Bell New Orleans Proposal, October 14, 1977).

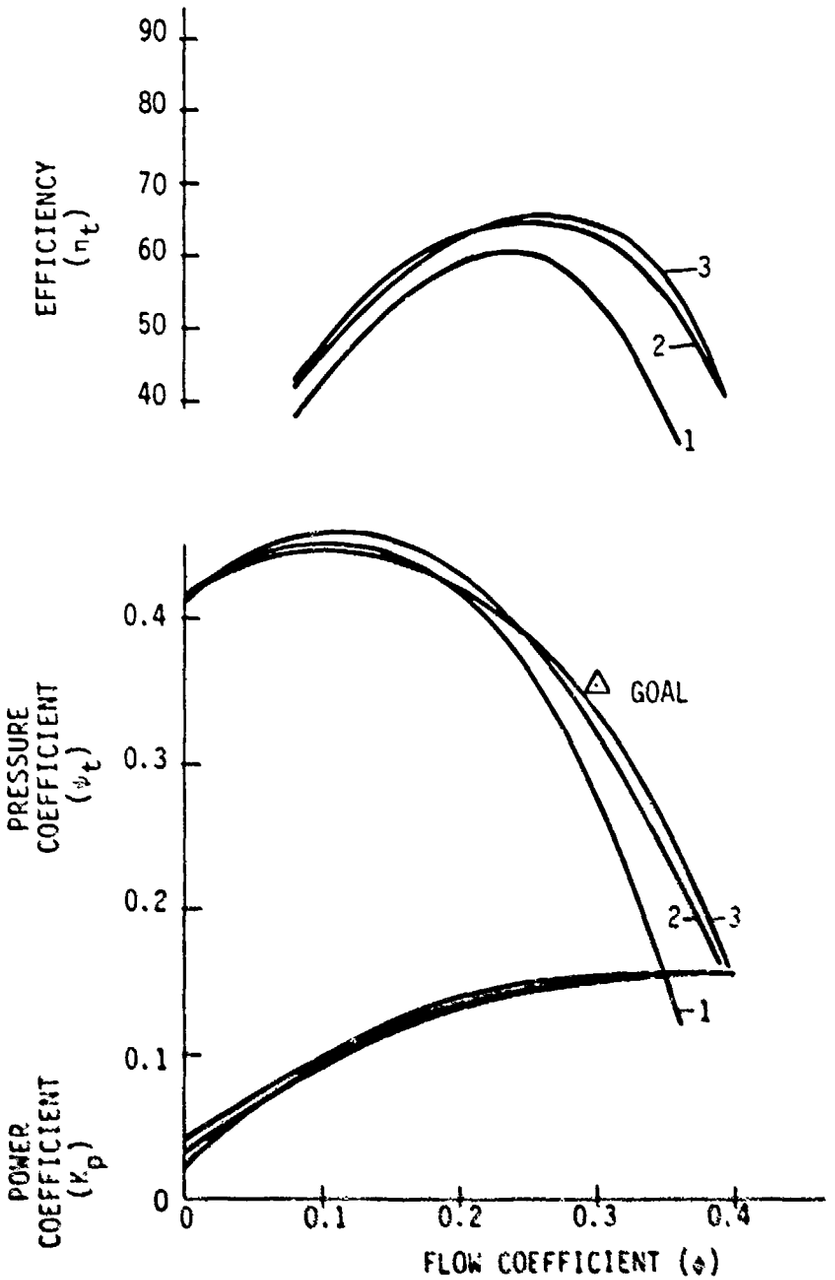

Figure 124 COMPARISON OF PERFORMANCE OF CONFIGURATIONS 1, 2, AND 3

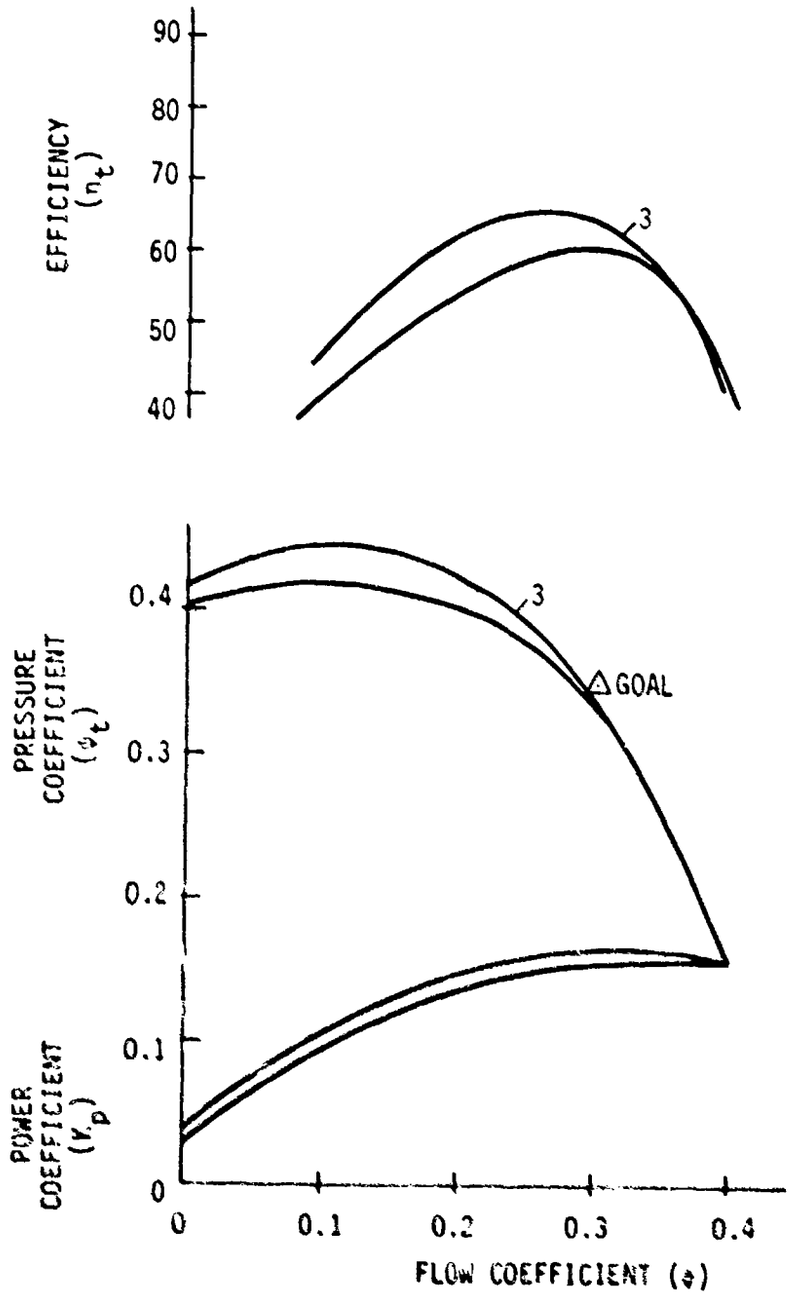

Figure 125 COMPARISON OF PERFORMANCE OF CONFIGURATIONS 3 and 4

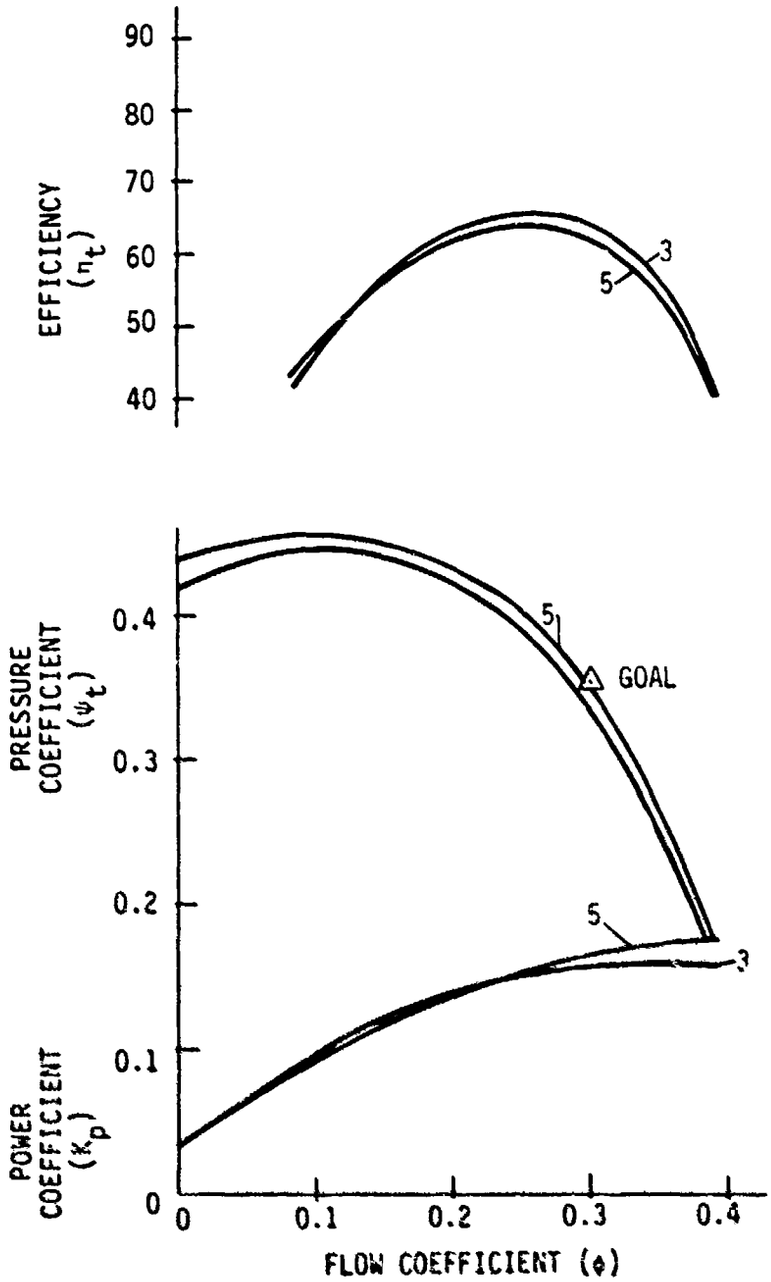

Figure 126 COMPARISON OF PERFORMANCE OF CONFIGURATIONS 3 AND 5

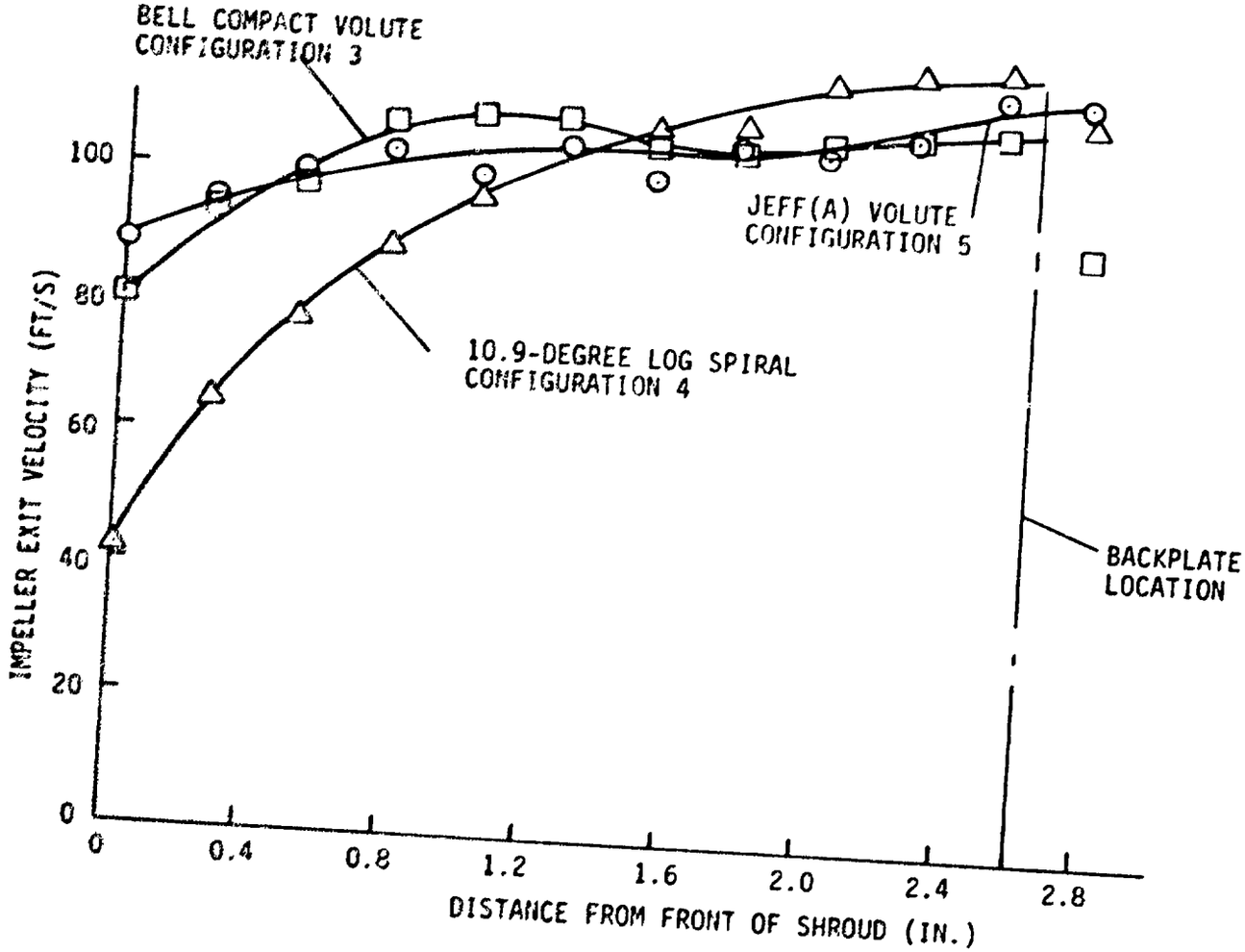

Figure 127 IMPELLER BLADE EXIT VELOCITY SURVEY COMPARISON

pages 185 through 190, for comparison of the performance based on test results with the analytical predictions made for the proposal.

Configuration 3 was regarded as satisfactory since the full-scale goal was very closely approached at model scale, particularly at the higher fan speeds, and application of corrections to full-scale conditions enabled the full-scale goal to be met, as shown in section 7 and illustrated by figures 135 through 140 on pages 191 through 196.

Configuration 4 was disappointing, since the efficiency was unexpectedly low, although the design goal for pressure and flow was quite closely approached. A comparison of Configurations 3 and 4 is shown in figure 125. Configuration 4 is slightly superior at very high flow coefficients, both in flow and efficiency; however, this is not in a region of normal operation. It was felt that considerable improvements could have been made to the characteristics of Configuration 4 if time had permitted. For instance, a narrower volute would almost certainly have been better, since the volume volute ratio, U/bd^2, was very high (19.25). The volute width used was 9 inches, the same as for Configuration 3. This width was retained as a matter of economy of time and money. In any case, the performance of the log spiral volute was mainly of academic interest, since the height of the exit section precludes its use in a conventional air cushion vehicle (ACV) installation.

The impeller performed much better than expected on Configuration 5, the JEFF(A) volute. The pressure flow characteristic was slightly superior to that for Configuration 3; however, the efficiency was slightly lower. A comparison based on the composite curves for all speeds is shown in figure 127. It will be seen that the pressure flow characteristic passes through the full-scale design goal.

The reason for surprise was that the JEFF(A) volute has a diffuser which is not of optimum design. It is not attached so that it is tangential to the volute spiral at the volute exit section and has an asymmetrical configuration, or offset. Although the velocity surveys confirmed the expectation that there would be a region of flow separation in the diffuser, apparently the flow reattaches, and the unusual diffuser geometry does not have a particularly bad effect on the fan performance.

Before leaving the subject of fan performance, a few words are in order concerning the model fan efficiency.

The peak efficiency of this model (about 67 percent) is unusually low for centrifugal fans. Indeed, a study of the blade inlet velocity triangles for a range of flow coefficients reveals that the blades are experiencing an adverse negative angle of attack. This condition, which is not conducive to high efficiency, arises from the fact that the fan blade angle was increased from 50 to 61.5 degrees during the development of the unique JEFF(B)

Siamese-twin double-discharge lift and propulsion fans. Peak efficiency was consciously sacrificed to obtain:

- Increased capacity (a higher design point flow coefficient)
- Increased efficiency at the operating point
- Increased structural properties due to a relatively narrower blade width, and increased bending stiffness.

Although the original JEFF(A) fan, based on the Airscrew Weyrock Heba B geometry (50-degree blade angle) had a peak efficiency of 80 percent at model scale and a predicted full-scale peak efficiency of 84 percent, its design full-scale predicted efficiency (flow coefficient 0.27) was only 71 percent (see reference 2, figure 19). This is insignificantly higher than the corresponding JEFF(B) impeller efficiency (at flow coefficient 0.29) of 70.5 percent (figure 135). Furthermore, at higher flow coefficients, eg, 0.31 to 0.34, which are perfectly acceptable operating points for the JEFF(B) impeller, the JEFF(B) impeller efficiency in either the Bell volute or the JEFF(A) volute is far higher than that of the JEFF(A) fan, as can be seen from a study of figures 135 and 136.

When comparing efficiencies, it is important to remember that the JEFF(B) wheel is slightly narrower than the JEFF(A) wheel. The blade width factors are 0.234 and 0.2175, respectively, so the reference flow coefficient of 0.27 for the JEFF(A) fan corresponds to a flow coefficient of 0.29 for the JEFF(B) impeller.

PRESSURE AND VELOCITY SURVEYS

Inlet Bellmouth Surveys

Inlet surveys were made for Configurations 3 and 5. The plots are to be found in the appropriate sections for these configurations. Figures 53, 54, and 55 show the results of inlet bellmouth throat surveys on vertical and horizontal axes for Configuration 3, while figures 107, 108, and 109 show similar results for Configuration 5. The three operating points selected for making surveys, A, B, and C, are identified in figure 51 for Configuration 3. Corresponding points were used for Configuration 5.

All the inlet bellmouth throat velocity survey plots are generally similar. All are slightly asymmetric, but there does not seem to be any particular pattern to these variations. In all cases, the flow velocity is highest near the wall, and is fairly constant near the center fairing. The velocity increases with flow, as would be expected.

Perhaps the most important aspect of the inlet flow to note is that it is definitely not one-dimensional. Therefore, the inlet should not be regarded as a nozzle with one-dimensional axisymmetric flow, as is assumed for the venturimeter nozzle, for instance. It is inappropriate to call the ratio of actual flow through the inlet to hypothetical flow (based on one-dimensional flow theory and throat static pressure) the coefficient of discharge of the inlet. Such terminology implies high total pressure losses and/or reduction of flow area, neither of which is true.

When it is possible to perform an actual calibration of the inlet by measurement of the discharge from the fan, the value of static wall pressure at the inlet throat may be a useful indication of flow. However, it must be remembered that it is very dangerous to apply the apparent nozzle coefficient obtained in this way to some other installation such as a full-size ACV fan system.

In addition to the inlet bellmouth throat surveys for Configuration 3 only, a survey was made parallel to the fan impeller axis at a radius of 2.6 inches, approximately halfway between the throat radius and the bullet radius, as shown in figure 78. The survey commenced in front of the bellmouth entry plane and continued to the back of the fan. As expected, the minimum static pressure occurred at the throat. It was noted that the throat static pressure in this preliminary survey was lower than the values found during the detailed throat surveys. However, the plot in figure 78 is interesting, since it shows that the static pressure commences to fall well outside the inlet, and after reaching a minimum at the throat, rises due to diffusion before the blade leading edge is reached, recovering 75 percent of the throat depression. Since the velocity of the air entering the blades is bout 40 ft/s (figure 65), the loss of total pressure would appear to be only about 10 percent of the throat depression.

Blade Inlet and Exit Surveys

Pressure and velocity surveys were made for both the impeller blade leading edge (inlet) and the trailing edge (exit) for Configurations 3, 4, and 5. Traverses were performed for these operating points for Configuration 3, and for one operating point (the maximum efficiency point) for Configurations 4 and 5.

So far as is known, this is the first data published for the blade inlet flow conditions. While it had always been suspected that there was a higher degree of angularity to the flow than simple theory would suggest, it was surprising to find out that the pre-swirl was negative over part of the blade span. This is believed to be due to flow separation from the inner wall of the blade shroud, but the phenomenon deserves more detailed investigation than was possible in this limited program. It will be seen from figures 61, 62, and 63 for Configuration 3 that the flow angle varies across the blade span, and although there is undoubtedly some scatter in the data due to the

difficulty of manipulating the probe, there seems to be a pattern to the results showing a sharp reduction of swirl near midspan. Configuration 4 showed a considerable proportion of the span with negative swirl [ie, swirl in the opposite direction to the impeller rotation, and essentially, zero-swirl over the rest of the span (figure 92)]. Configuration 5 showed a similar distribution of inlet flow angle to that of Configuration 3.

The surveys of inlet flow velocity gave consistent results and smooth curves, particularly for Configuration 3 (figures 64, 65, and 66). It will be seen that the velocity peaks near the midspan and increases with increasing flow as expected. The flow calculated from the blade leading edge velocity survey is in reasonable agreement with the measured fan flow; however, it is generally a little higher because of the leakage flow which is recirculated to the inlet bellmouth through the inlet bellmouth/impeller gap.

It was noted that the blade inlet velocity plot for Configuration 5 (figure 120) was of distinctly different form from the corresponding plots for Configurations 3 and 4 (figures 64, 65, 66, and 93). The values of velocity, however, are consistent with the corresponding values for Configurations 3 and 4, and with the measured flow. No explanation can be offered at the present time for the difference in the shape of the curves, which show velocity tending to a maximum at the back of the impeller.

The curves of inlet total and static pressure across the span of the blades are smooth and consistent. As would be expected, the difference between total and static pressure increases with flow rate. Both pressures tend to fall towards the back of the impeller, particularly for Configuration 4 (figure 69).

The blade exit flow angle surveys produced smooth and consistent curves showing the angle increasing toward the back of the impeller and increasing with flow as expected. Since the JEFF(B) impeller has a higher blade angle (61.5 degrees) than the JEFF(A) impeller (50 degrees), the exit flow angles for the JEFF(B) impeller are considerably higher than those for the JEFF(A) impeller (reference 2). Also, there is a distinct difference in the shape of the curves for the two impellers, most noticeably near the design flow points, as shown for example by figure 72 (Configuration 3) and figure 26, reference 2.

The exit flow angles for Configuration 5 are quite similar to those for Configuration 3. However, Configuration 4 had an exit flow angle distribution quite different from any of the others (figure 95), but which seemed to reflect the shape of the inlet flow angle distribution curve (figure 92).

The exit static and total pressure curves appeared to present no surprises and were generally similar to those obtained by AERC for the JEFF(A) model. The blade exit velocity plots showed that velocity tends to increase toward the back of the impeller. There was a noticeable difference in the shape of the velocity curve for the three configurations tested. A comparison

is shown in figure 127. Configuration 3, which had the highest efficiency, has the highest average blade exit velocity. However, Configuration 4 showed both the highest velocity (at the back) and the lowest velocity (at the front shroud). It is not possible to present a detailed comparison of all features of the curves in this report; however, some words of caution are in order at this point, as follows.

If the flow leaving the impeller was uniform in the space between any blade and the one following it, knowledge of the fan geometry, impeller speed, and the measured flow would enable the blade exit velocity triangles to be constructed for different operating points. The blade exit absolute velocity (speed and flow angle) should be in reasonable agreement with the results of the blade exit surveys. If the exercise is performed, it will be found that this is not generally the case; the flow angle, in particular, appears to be higher than that predicted by simple analysis. The reason is that the flow leaving the blade trailing edge is highly nonuniform circumferentially and spanwise. Any kind of probe used to survey the flow leaving the impeller will be subjected to a pulsating pressure and velocity. The values recorded by the instrumentation will be some kind of mean or average over the time and space interval between blades.

It is beyond the scope of this report to present a detailed analysis of this phenomenon or to correlate the observed values of pressure, velocity, and flow angle with a refined analytical prediction.

In view of the fact that experimental data now exists for three volute configurations with the JEFF(B) impeller and one configuration with the JEFF(A) impeller, it would seem to be a useful task for a future study or an extension of the present study to examine all the relevant data in greater detail and to attempt a correlation with a suitably modified mathematical flow model for fans of this type.

VOLUTE AND DIFFUSER EXIT PLANE SURVEYS

The volute exit planes for Configurations 3, 4, and 5 were completely surveyed, and maps showing contours of equal velocity were prepared. In addition, for Configuration 5 only, the diffuser exit plane was surveyed and mapped.

The most striking aspect of all these contour maps is their complexity, reflecting the confused nature of the flow leaving a centrifugal fan volute. For Configuration 3, all the maps show a region of high velocity and steep velocity gradients in the lower left-hand corner, which is close to the impeller discharge location. However, there are other regions at the middle right and upper left portions of the map where the velocity is almost as high (figures 57 through 60). Configuration 4 shows the high velocity region near the impeller discharge location and the less pronounced region of high

velocity at the middle right. However, at the top right, it exhibits a distinct region of low velocity where Configuration 3 tended to have a region of high velocity (figures 89 through 91).

Configuration 5 was the most interesting, since in addition to the regions of high velocity in the vicinity of the wheel discharge on the left, it showed low velocity, and reverse flow for two operating points, at the lower left (figures 111 through 113). The region of reverse flow, due to its odd shape, is believed to indicate separation of the flow from the diffuser wall. However, when the diffuser exit survey maps are examined (figures 115 through 118), no region of very low velocity or reverse flow is evident. This suggests that the flow reattaches before leaving the diffuser.

For all the volute and diffuser exit surveys, static pressure was recorded, but the variation of static pressure across the sections was not large. Accordingly, plots of static pressure were not prepared because of the severe restriction of time available and the large number of other figures in the report.

MISCELLANEOUS TESTS

In the course of the test program, several minor investigations of interest were performed.

For Configuration 1, the axial location of the inlet bellmouth with respect to the impeller was varied for operating points in the vicinity of the design operating point. Figures 31, 32, and 33 show the three positions of the bellmouth which were tested. Figure 34 shows the spread of pressure coefficient and efficiency obtained. The smallest clearance gave the best result, and this was used for all subsequent testing.

From a previous IR&D investigation, it was known that the static pressure in the volute near the inlet bellmouth was much lower than the static pressure at the volute exit section. Knowledge of the pressure at the impeller/inlet bellmouth interface is necessary, together with knowledge of the bellmouth throat wall static pressure, if it is desired to make an accurate estimate of the flow through the clearance gap between impeller and bellmouth. It is totally incorrect to assume that the former is equal to the fan discharge total pressure and that the latter can be calculated from one-dimensional isentropic flow in the inlet, as was done in reference 2, appendix 4, p 62.

Figure 77 shows the results of static pressure measurements inside the volute at the locations indicated in figure 76. It can be seen that the static pressure at the impeller/inlet interface is only 1 inch H_2O (scale magnification factor is 5), whereas table 13 shows that the fan discharge static pressure was greater than 4.1 inches H_2O, with a total pressure of almost 4.3 inches H_2O. Figure 54 indicates an inlet throat wall velocity of about

115 ft/s corresponding to a static pressure depression of about 3 inches H_2O below atmospheric pressure. Thus, the total static pressure difference across the inlet clearance gap is close to 4 inches H_2O. This is very much less than the pressure difference calculated by the method of reference 2, which would add the fan discharge total pressure, 4.3 inches H_2O, to the one-dimensional throat depression, 1.9 inches H_2O, to give a total of 6.2 inches H_2O differential pressure.

Assuming a mean gap of 0.02 inch and a flow coefficient of 0.70, the flow through the gap with the Bell-estimated pressures is given by

$$Q_c = \pi\, d_t\, c\, Cd_c\, V_c/144 \qquad ft^3/s$$

$$V_c = \sqrt{\frac{2g_o\, \Delta P}{\rho}} \qquad ft/s$$

where

g_o = 32.174 (dimensionless constant, numerically equal to standard gravitational acceleration)

ΔP = Pressure difference across gap, lb_f/ft^2, or inches $H_2O \times 5.2$

ρ = Air density at the gap for 70^oF, 0.075 lb/ft^3

Q_c = Flow through clearance gap, ft^3/s

d_t = Diameter of throat, inches

c = Clearance gap between bellmouth and impeller, inches

Cd_c = Coefficient of discharge of gap

V_c = Velocity of flow through gap, ft/s.

Substituting the throat diameter d_t = 7.25 inches (at gap) and c = 0.020 inches with Cd_c = 0.7 when V_c is calculated to be 135 ft/s for a pressure difference of 4 inches H_2O, gives Q_c = 0.295 ft^3/s or 1 percent of fan flow.

At a local temperature of 70^oF, this corresponds to a mass flow (not weight flow) rate of 0.0218 lb/s. Weight is a force and does not flow in the sense that a gas flows. Had the method of reference 2 been used, the flow would have been estimated to be 0.354 ft^3/s or 0.026 lb/s. Although this final difference is not great, the method used here represents much more accurately the physical conditions which exist in the fan.

Prior to the detailed inlet throat surveys, the existence of a measurable pre-swirl of the air entering the fan blades was demonstrated by a hand-held Pitot-static wedge probe traverse inserted at one location only (see figure 26).

7. FULL-SCALE PERFORMANCE PREDICTIONS

The two configurations selected for full-scale performance predictions were the Bell Compact Volute, Configuration 3, and the JEFF(A) Volute and Diffuser, Configuration 5.

Both of these configurations led to model scale nondimensional pressure flow characteristics which met the design point performance based on the proposal predictions for the JEFF(B) impeller in a Bell-designed volute (figure 135). For ease of comparison and plotting, a single design point was selected as the goal. This point was for pressure coefficient $\psi_t = 0.35$ and flow coefficient $\phi = 0.30$, and is shown on the various model test performance plots.

Two corrections were applied to the model data only for the purpose of making full-scale performance predictions. A compressibility correction was applied to the pressure and flow coefficients in general accordance with the method shown in reference 1, but taking into account the discussion and method presented by the author in reference 4.[4] It should be noted that the correction is small and if disregarded, it does not affect the validity of the conclusion that the performance goal was met.

Additionally, a Reynolds number correction was applied to the fan efficiency in accordance with the expression given by Pampreen in equation (1).

There are several expressions which have been proposed for calculating full-scale fan efficiency from model test results. Figure 128, from reference 2, shows a comparison of these methods applied to a fan whose full-scale Reynolds number is 2.7×10^7. The ordinate shows the ratio of model scale efficiency to full-scale efficiency. It will be seen that, except for the method of Baljé, Pampreen gives the smallest difference in model and full-scale efficiency for the range of Reynolds number shown. Because the full-scale Reynolds number used to construct the diagram is so high, figure 128 cannot be used directly to compute full-scale efficiencies for the AALC fans, but it serves a very useful purpose in illustrating the relative magnitudes and ranges of applicability of the various Reynolds number correction methods:

$$\frac{1 - \eta_{FS}}{1 - \eta_{MOD}} = \left(\frac{Re_{MOD}}{Re_{FS}}\right)^{0.116} \qquad \text{(Pampreen)} \qquad (1)$$

where Re_{FS} shall not exceed 4×10^6.

[4] Technical Note, *Fan Efficiency Definition for the 2KSFS Program* (Bell New Orleans Report No. TN/2KSFS/119, April 8, 1975).

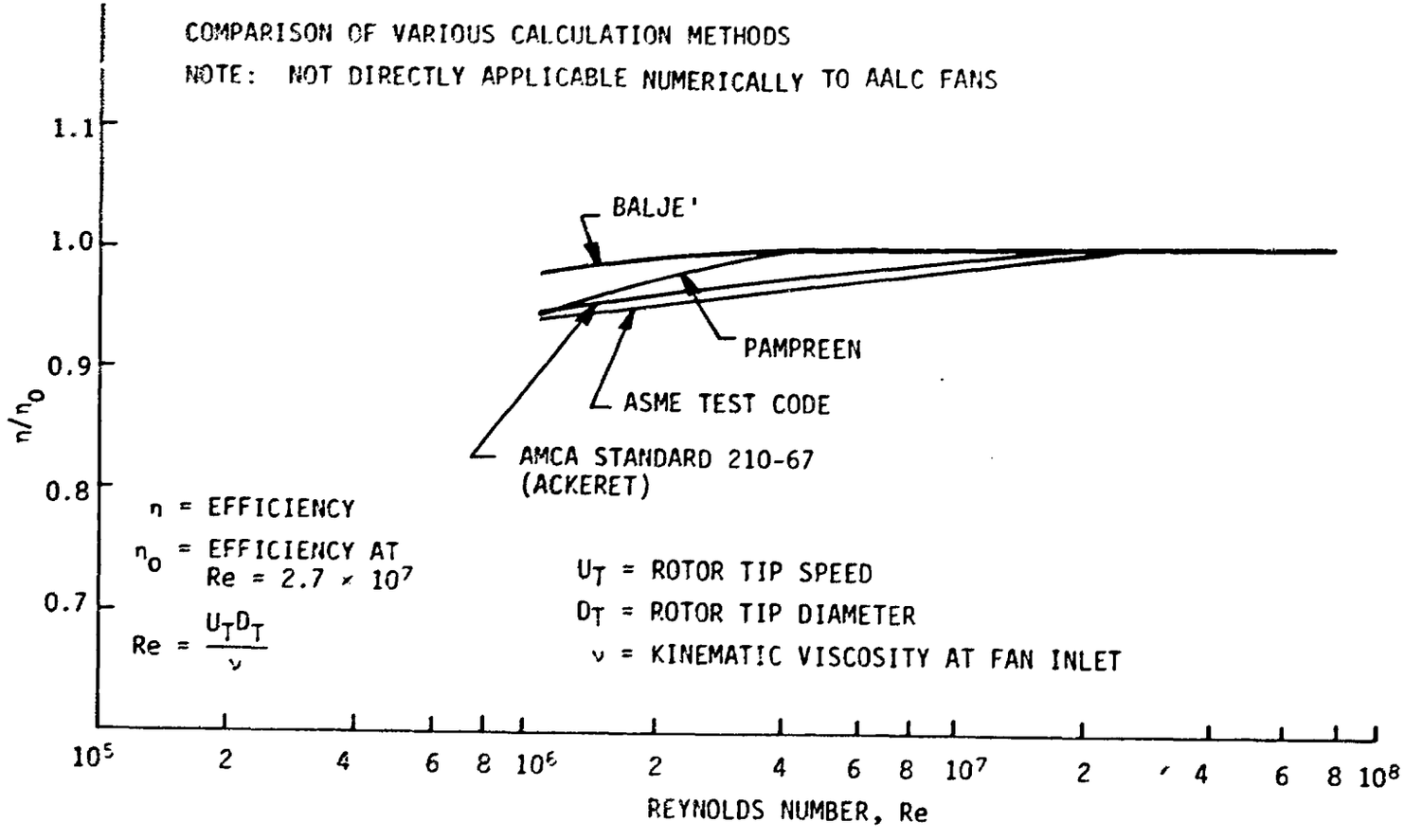

Figure 128 EFFECT OF REYNOLDS NUMBER ON EFFICIENCY

Bell Aerospace TEXTRON
Division of Textron Inc

$$\frac{1 - \eta_{MOD}}{1 - \eta_{FS}} = 0.5 + 0.5 \left(\frac{Re_{FS}}{Re_{MOD}}\right)^{0.2} \quad . \quad \text{(Ackeret)} \qquad (2)$$

Equation (1) is the expression that ALRC used in reference 2. It is more conservative than the expression due to Ackeret, equation (2), which is given in reference 1. For comparison, the full-scale efficiency computed by the Ackeret method is also shown for part of the efficiency curve near the design point in figures 135 and 136. If the larger correction were applied, the predicted full-scale horsepower would be reduced accordingly. It is not recommended that this reduction be taken into account in evaluating the power required for the full-scale craft.

When the efficiency of a full-scale fan is found to be higher than that of the model due to Reynolds number (viscosity) effects, it will generally be found that the power coefficient is reduced apart from any observed increase in the pressure coefficient. Accordingly, it is not permissible to use the predicted increase in efficiency due to Reynolds number effects when scaling up model data to give a proportionate increase in pressure coefficient, as was done by ALRC in reference 2, p 24, since this implies no change of power coefficient, K_p. Accordingly, the fan would absorb the same power as if simple scaling applied, ie,

$$HP_{FS} = HP_{MOD} \times \left(\frac{D_{FS}}{D_{MOD}}\right)^5 \times \left(\frac{N_{FS}}{N_{MOD}}\right)^3 \quad .$$

In fact, there is no easy way to determine to what extent an increase in efficiency is reflected by a reduction of power required or by an increase in pressure. In any actual case, the situation is obscured by minor differences which inevitably are present between the geometry of the full-scale fan and the model by which it is represented.

Figure 135 shows the model and full-scale nondimensional characteristics for the JEFF(B) impeller in the Bell-designed compact volute (Configuration 3), and figure 136 shows the model and full-scale nondimensional characteristics for the JEFF(B) impeller in the JEFF(A) volute (Configuration 5).

Figures 137 and 138 show dimensional performance characteristics for the 48-inch-diameter JEFF(B) impeller in the Bell-designed compact volute. Figures 139 and 140 show the performance for the same impeller in the JEFF(A) volute. On figures 137 through 140, the shaded box represents the range of pressure and flow in which it is desirable to operate the JEFF(A) craft at its design condition.

It will be seen that for both the Bell-designed volute and the JEFF(A) volute, the desired pressure and flow can be obtained with fan speeds well below the value of about 2450 rpm required for the original JEFF(A) fans.

Although the full-scale performance predictions are shown for 4-foot-diameter impellers, the existing JEFF(A) volutes are capable of accepting wheels up to 50 inches in diameter. Figures 141 and 142 show dimensional performance of the impeller with a 49.5-inch-diameter in the Bell-designed volute and the JEFF(A) volute, respectively.

If a wheel larger than 48 inches in diameter, but less than 50 inches in diameter was used, there would be a very slight reduction in nondimensional performance due to the reduced volute volume ratio. Figure 143 shows the predicted relationship between fan speed required to produce the desired performance and impeller diameter. Curves are shown for 59°F and 100°F ambient temperature.

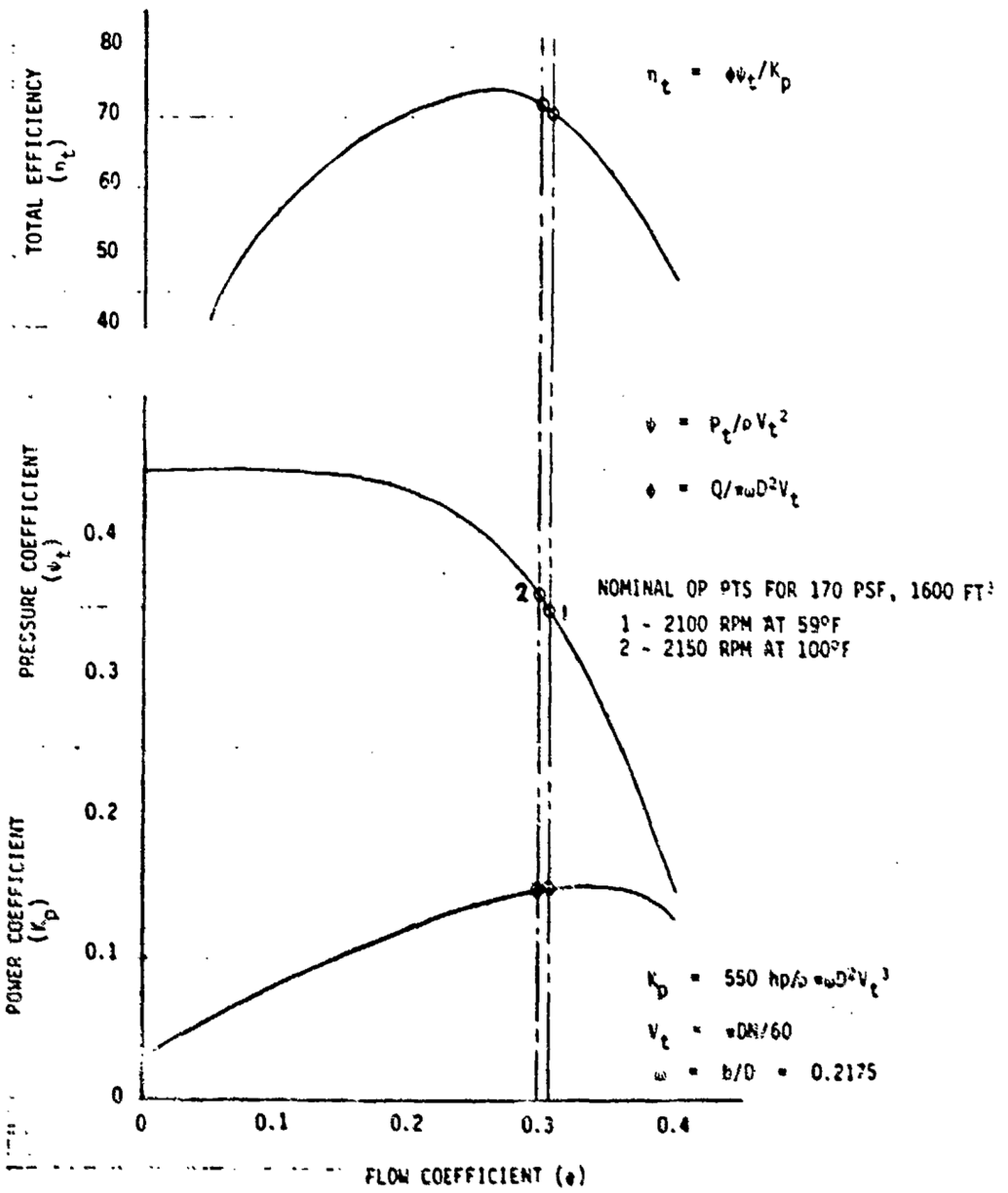

Figure 129 FULL-SCALE CHARACTERISTICS OF JEFF(B) IMPELLER IN BELL-DESIGNED VOLUTE, PROPOSAL PREDICTIONS

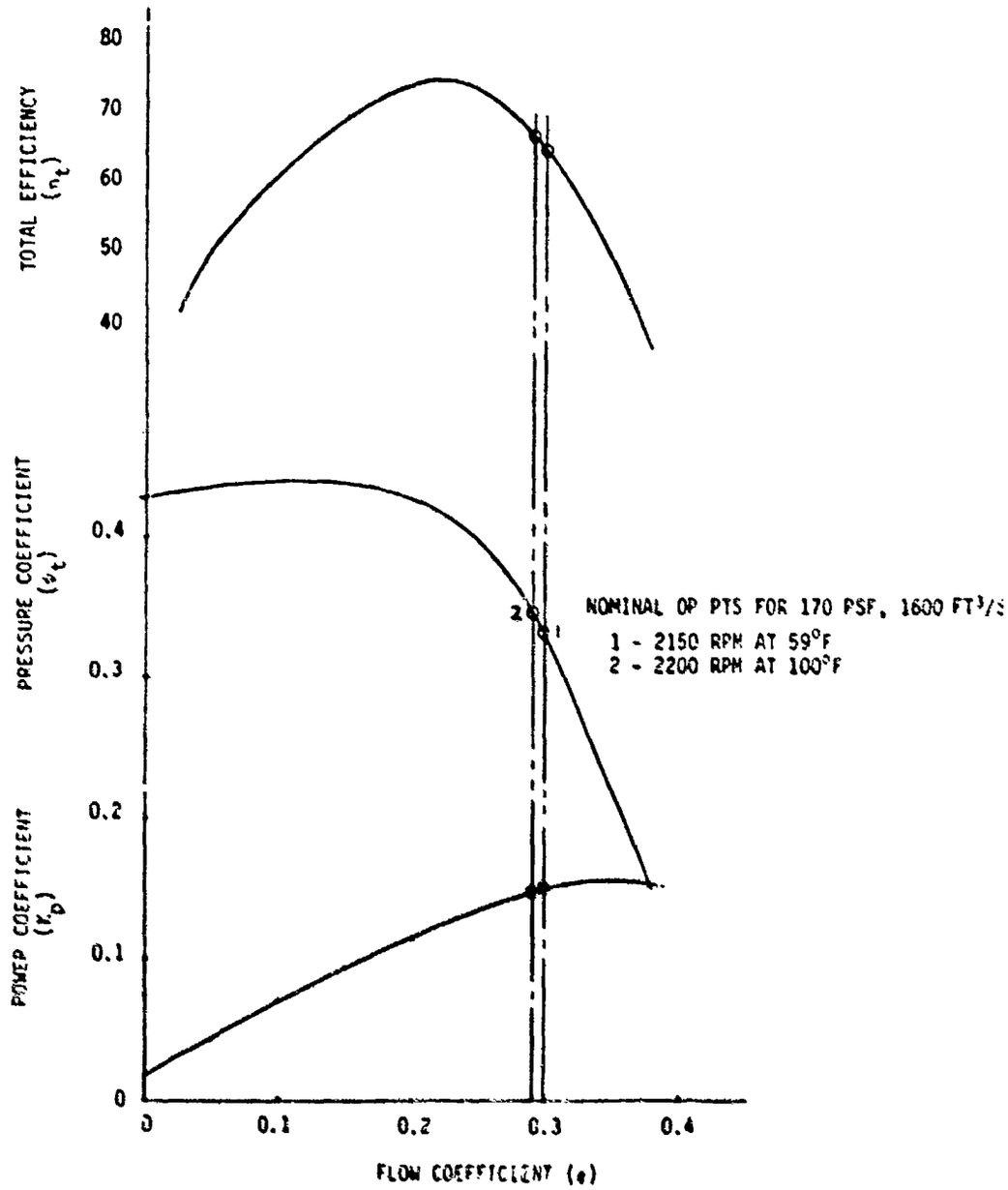

Figure 130 FULL-SCALE CHARACTERISTICS OF JEFF(B) IMPELLER IN JEFF(A) VOLUTE, PROPOSAL PREDICTIONS

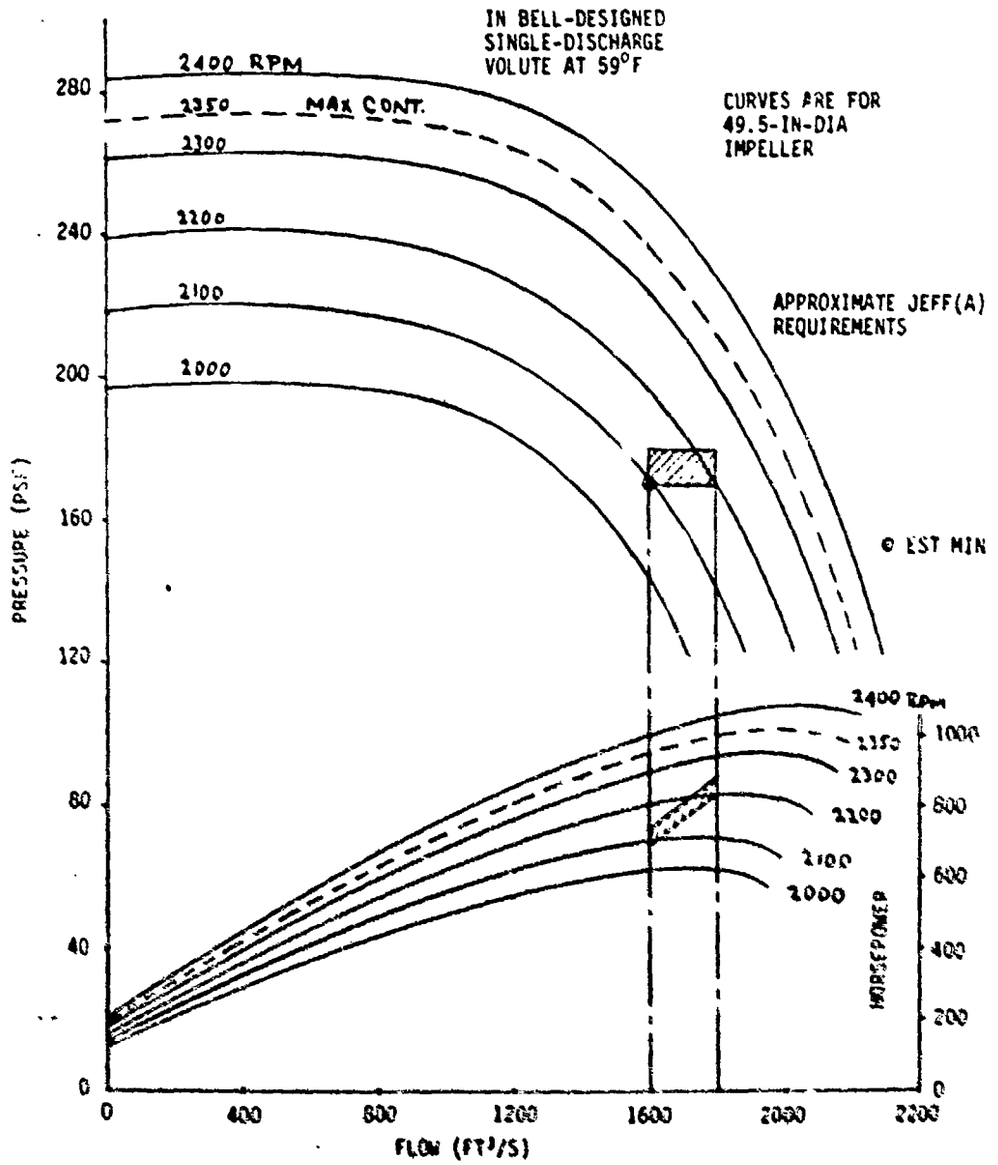

Figure 131 FULL-SCALE PERFORMANCE OF JEFF(B) IMPELLER IN BELL-DESIGNED VOLUTE, PROPOSAL PREDICTIONS (59°F)

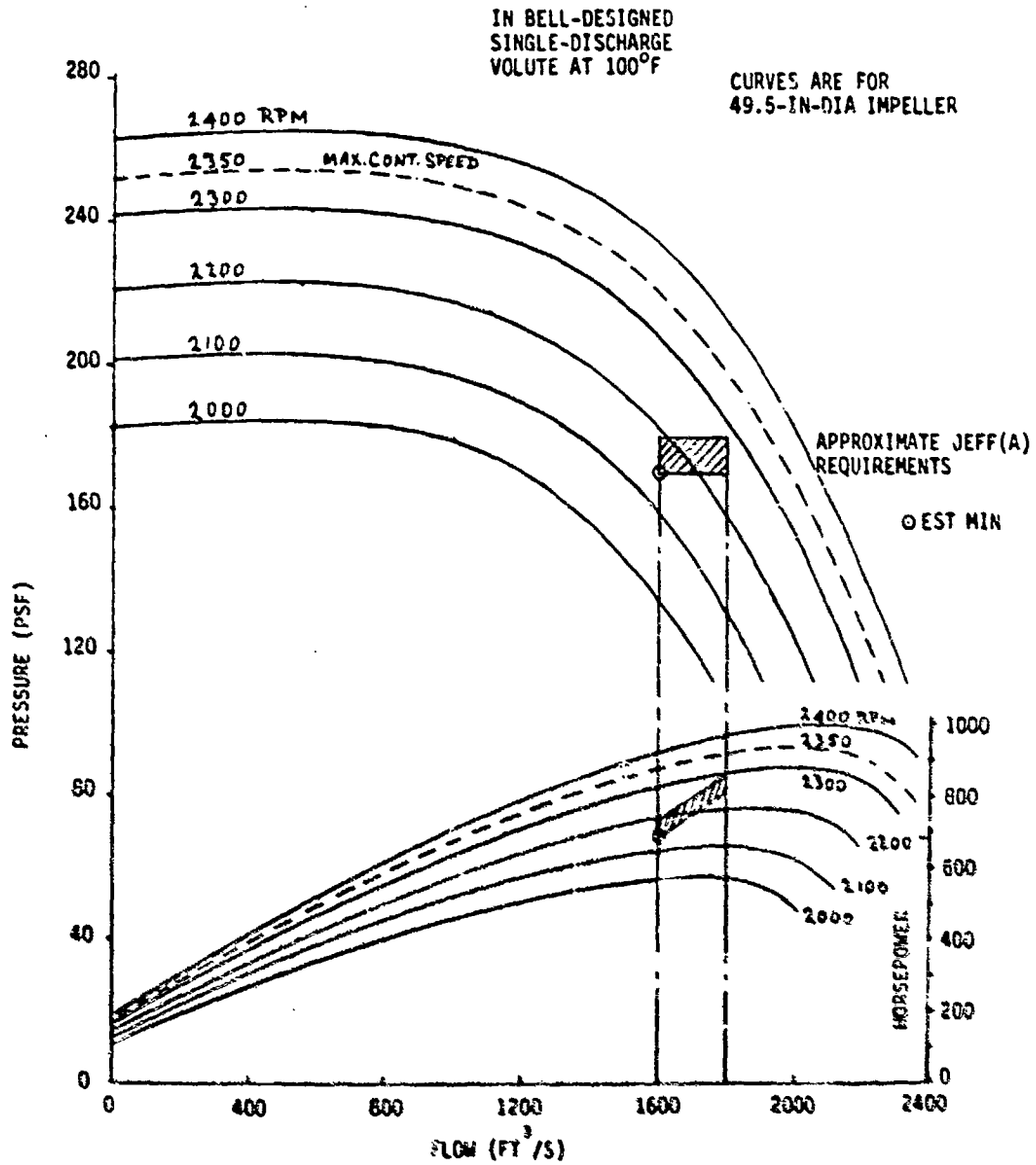

Figure 132 FULL-SCALE PERFORMANCE OF JEFF(B) IMPELLER IN BELL-DESIGNED VOLUTE, PROPOSAL PREDICTIONS (100°F)

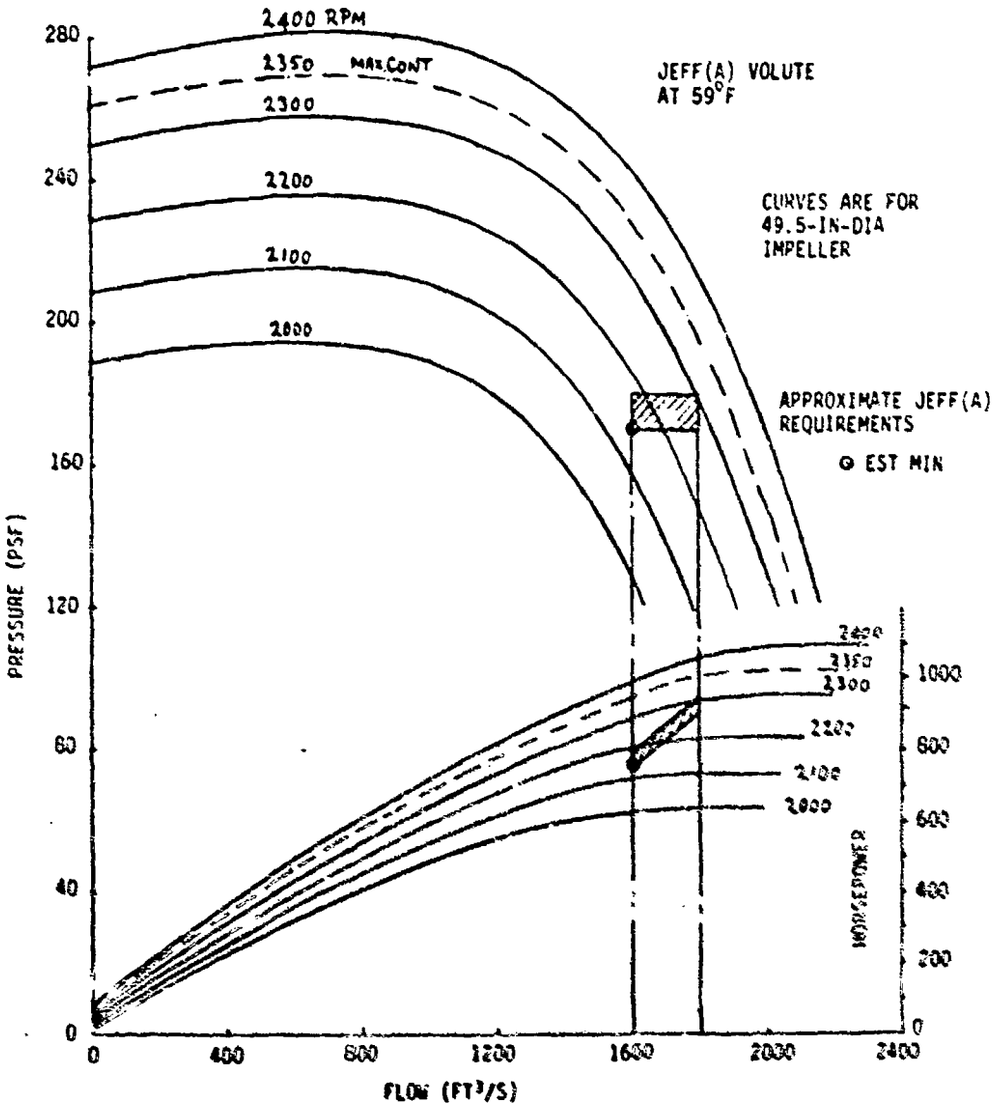

Figure 135 FULL-SCALE PERFORMANCE OF JEFF(B) IMPELLER IN JEFF(A) VOLUTE, PROPOSAL PREDICTIONS (59°F)

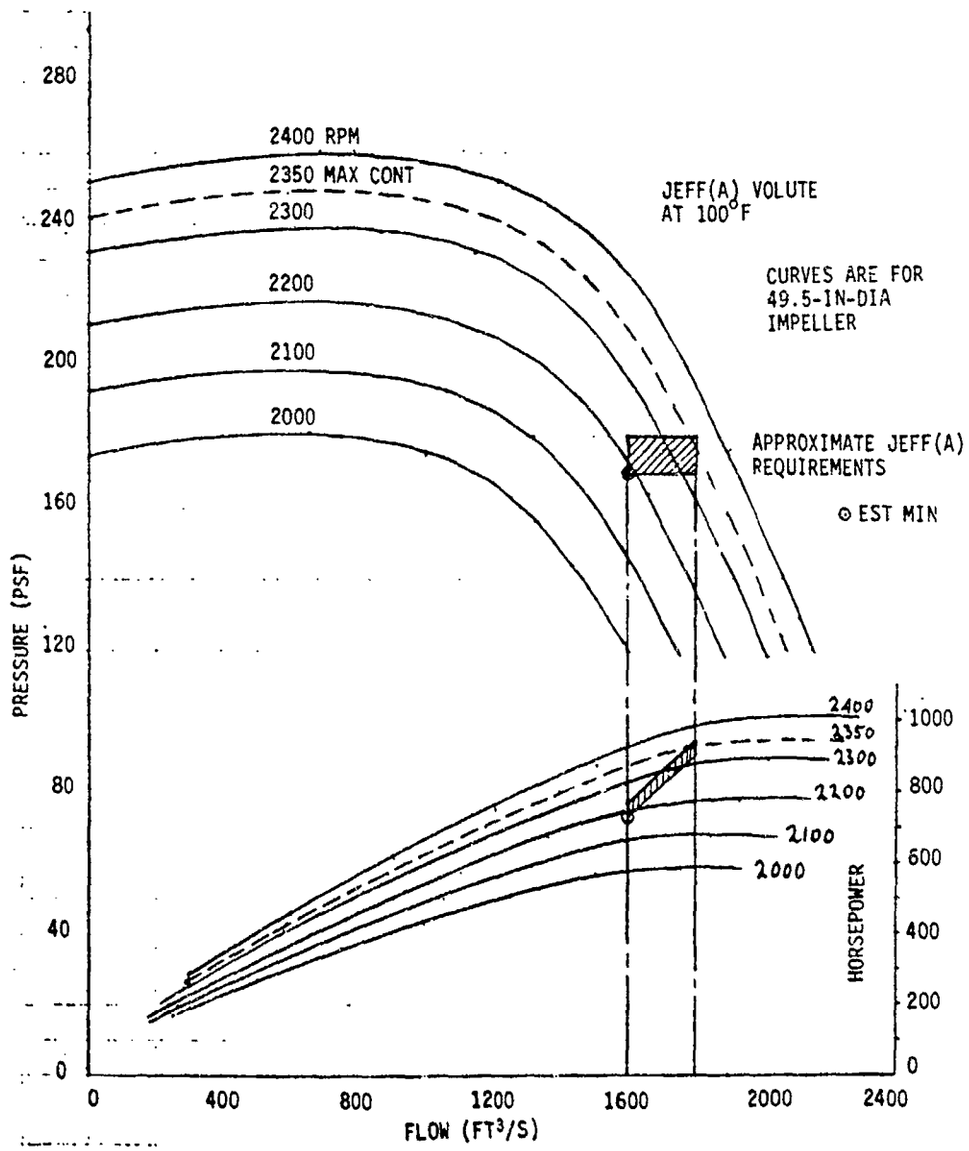

Figure 134 FULL-SCALE PERFORMANCE OF JEFF(B) IMPELLER IN JEFF(A) VOLUTE, PROPOSAL PREDICTIONS (100°F)

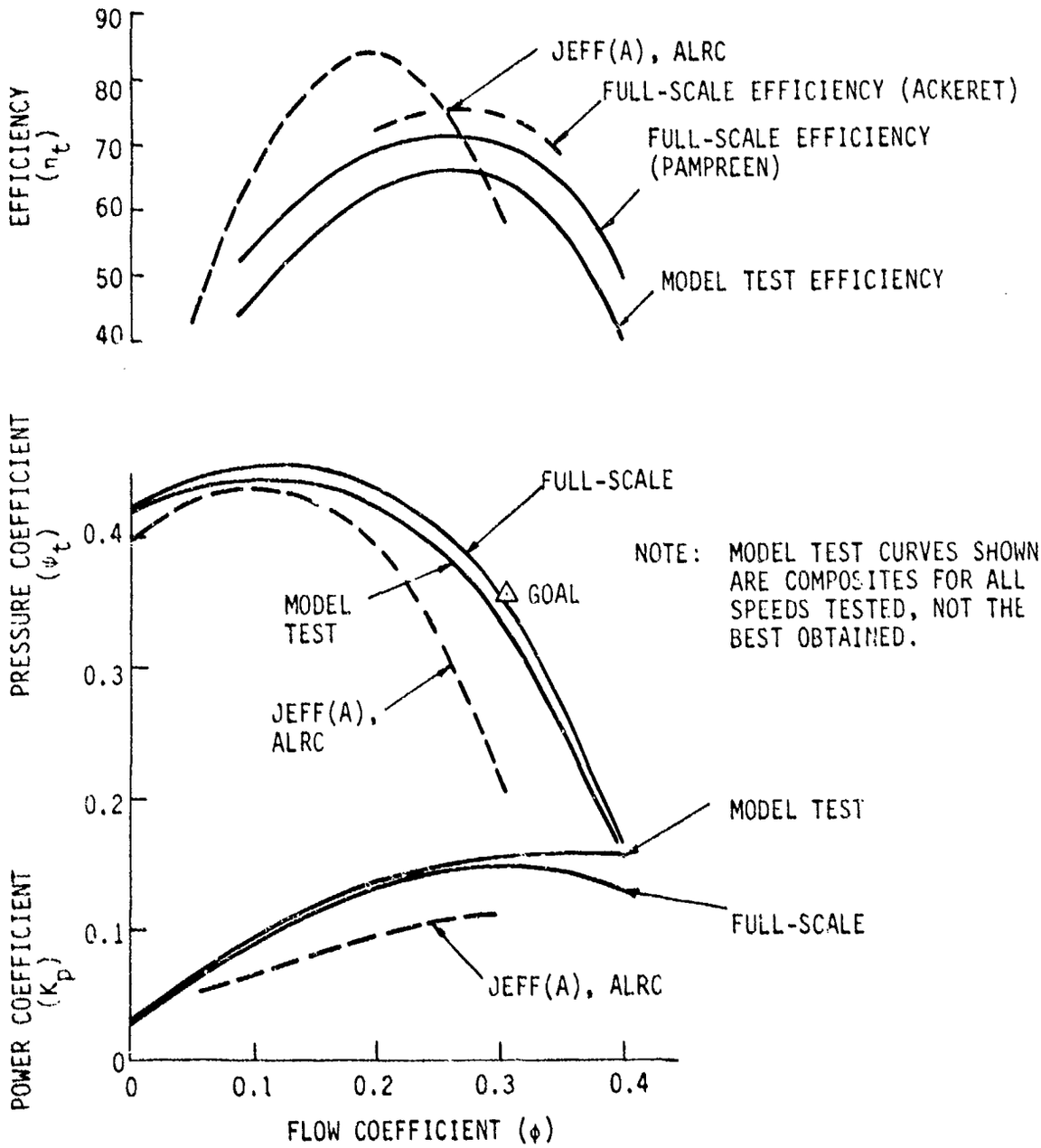

Figure 135 MODEL AND FULL-SCALE NONDIMENSIONAL PERFORMANCE CHARACTERISTICS OF JEFF(B) IMPELLER IN BELL-DESIGNED VOLUTE

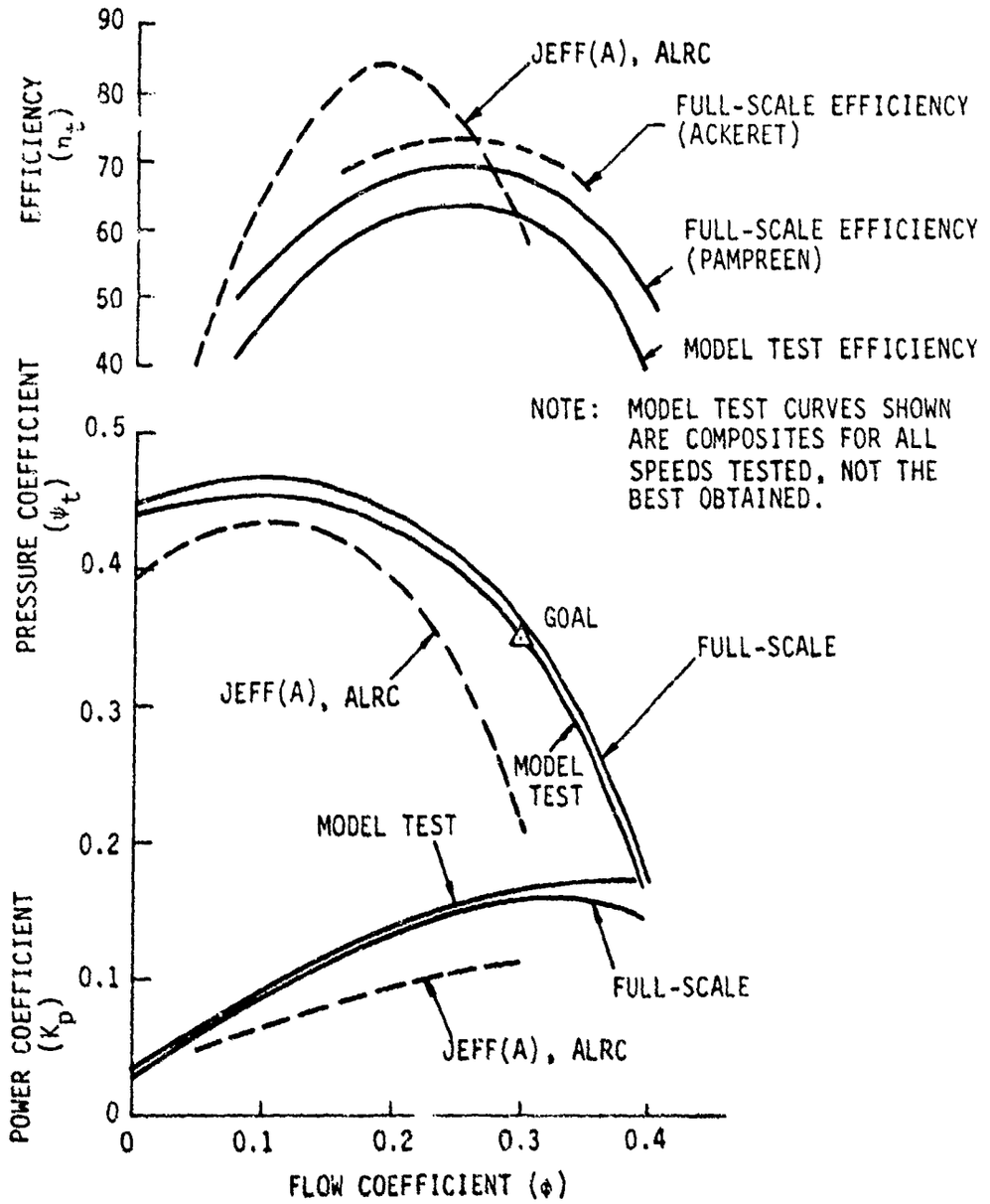

Figure 136 MODEL AND FULL-SCALE NONDIMENSIONAL PERFORMANCE CHARACTERISTICS OF JEFF(B) IMPELLER IN JEFF(A) VOLUTE

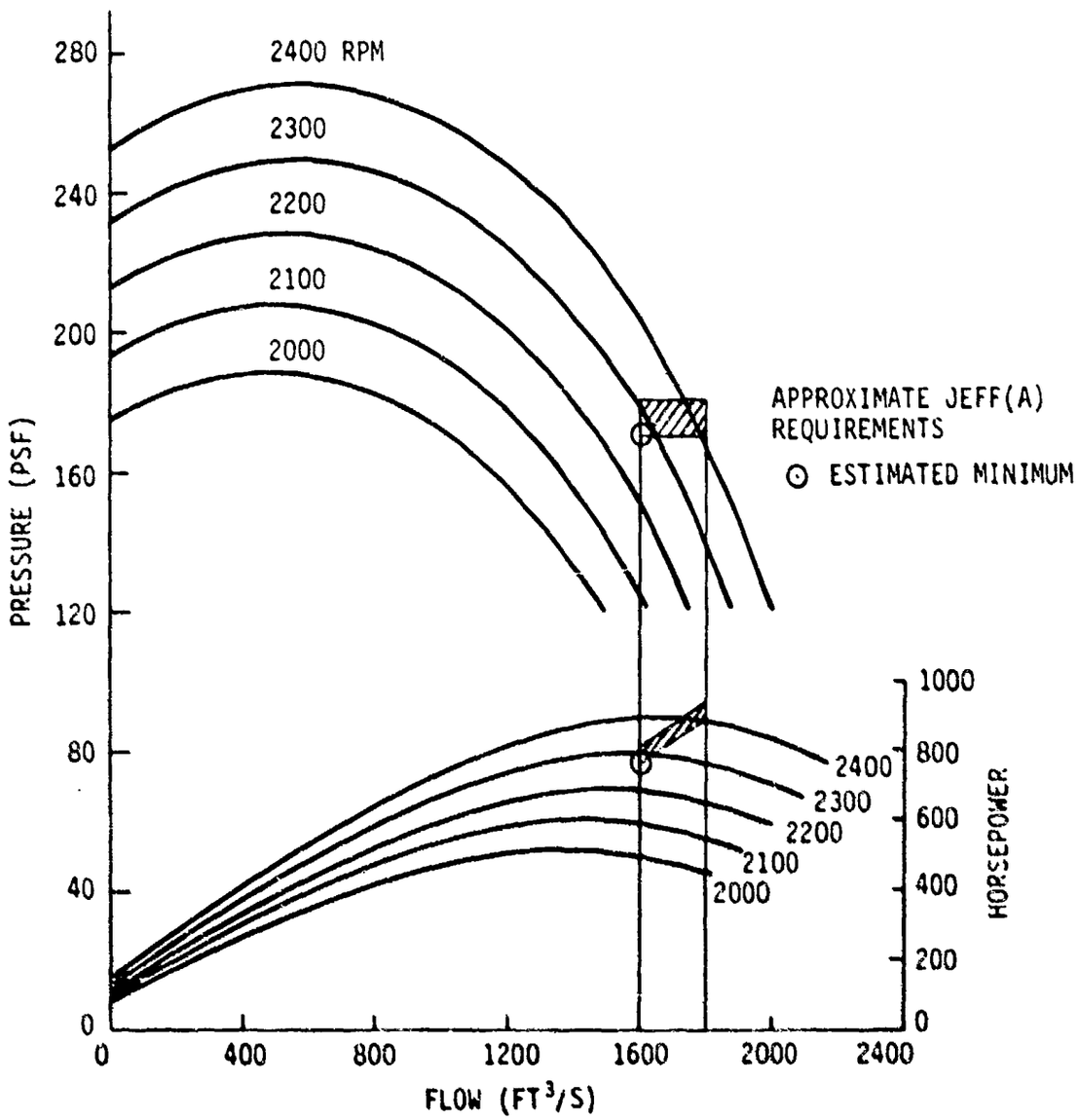

Figure 137 FULL-SCALE PERFORMANCE OF JEFF(B) IMPELLER IN BELL-DESIGNED VOLUTE, BASED ON MODEL TEST DATA (59°F)

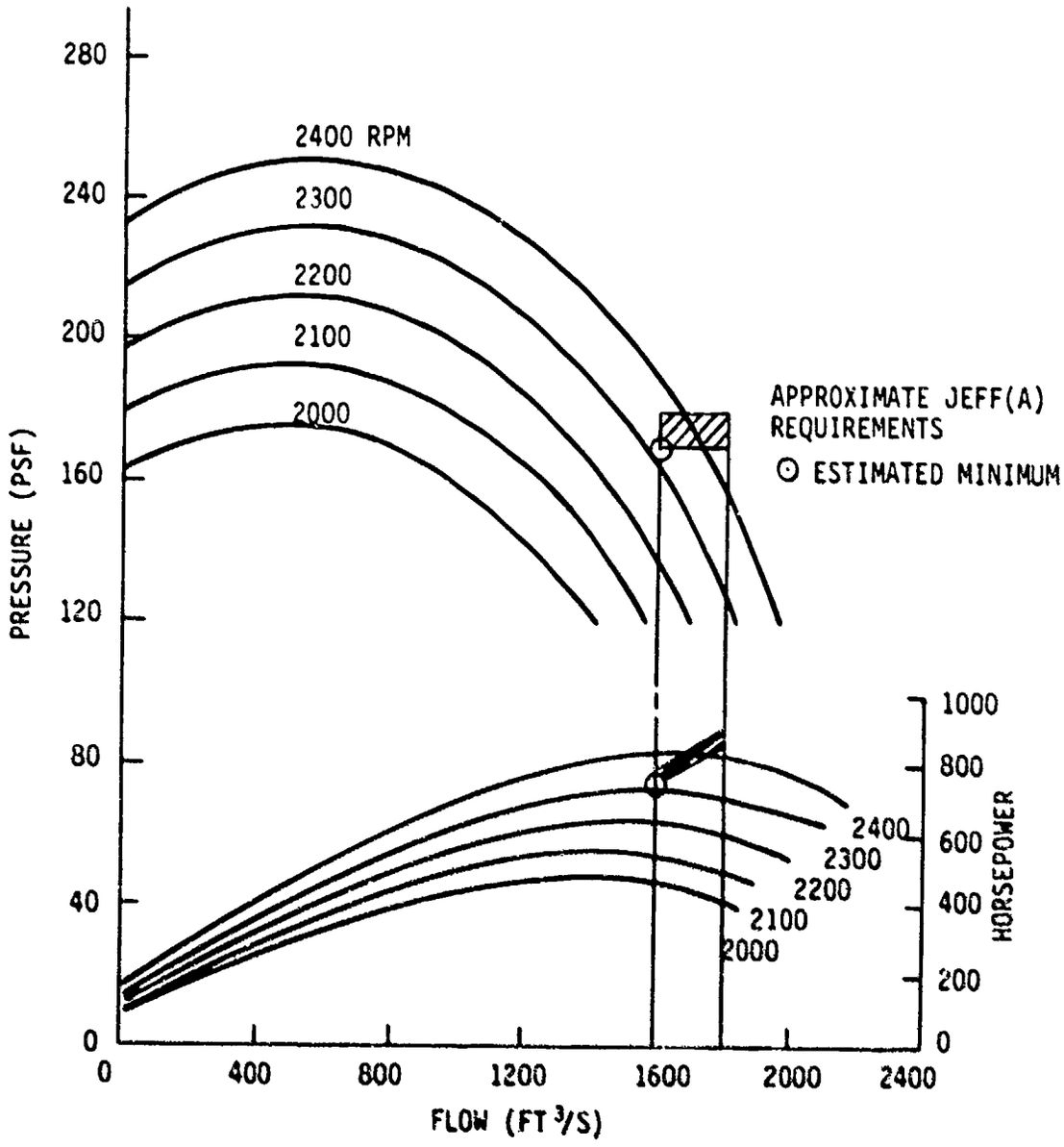

Figure 138 FULL-SCALE PERFORMANCE OF JEFF(B) IMPELLER IN BELL-DESIGNED VOLUTE, BASED ON MODEL TEST DATA (100°F)

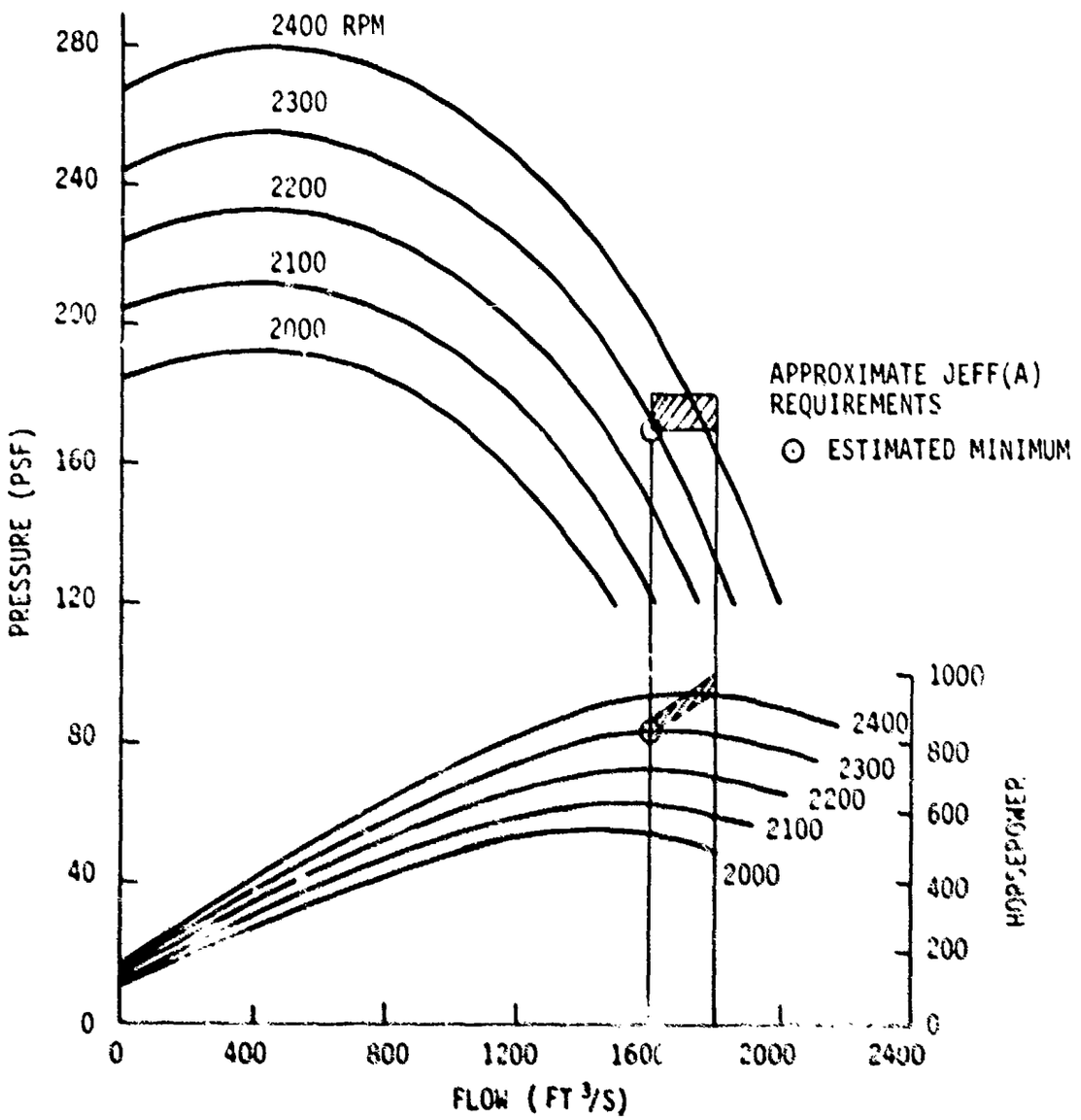

Figure 132 FULL-SCALE PERFORMANCE OF JEFF(B) IMPELLER IN JEFF(A) VOLUTE, BASED ON MODEL TEST DATA (59°F)

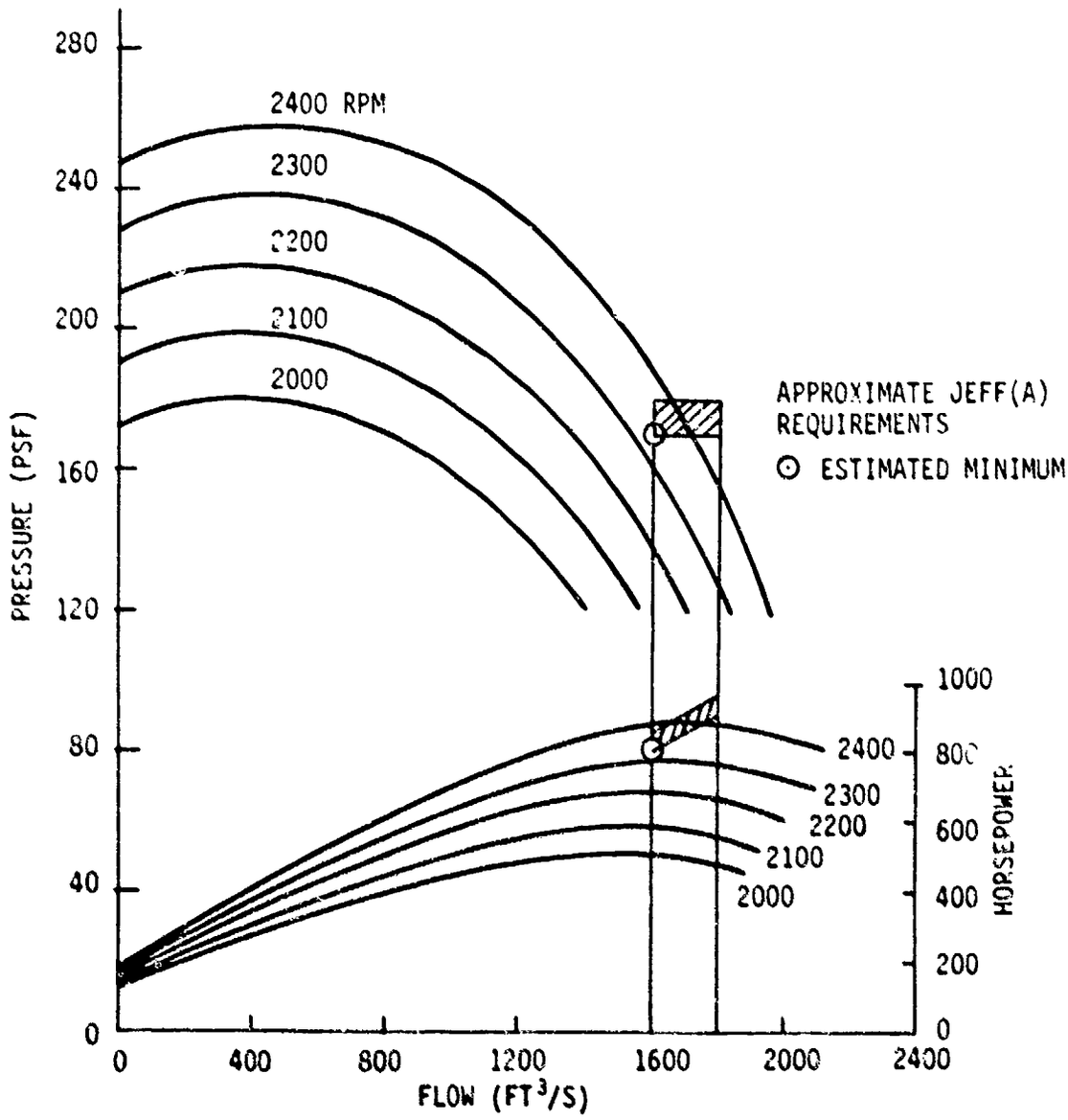

Figure 140 FULL-SCALE PERFORMANCE OF JEFF(B) IMPELLER IN JEFF(A) VOLUTE, BASED ON MODEL TEST DATA (100°F)

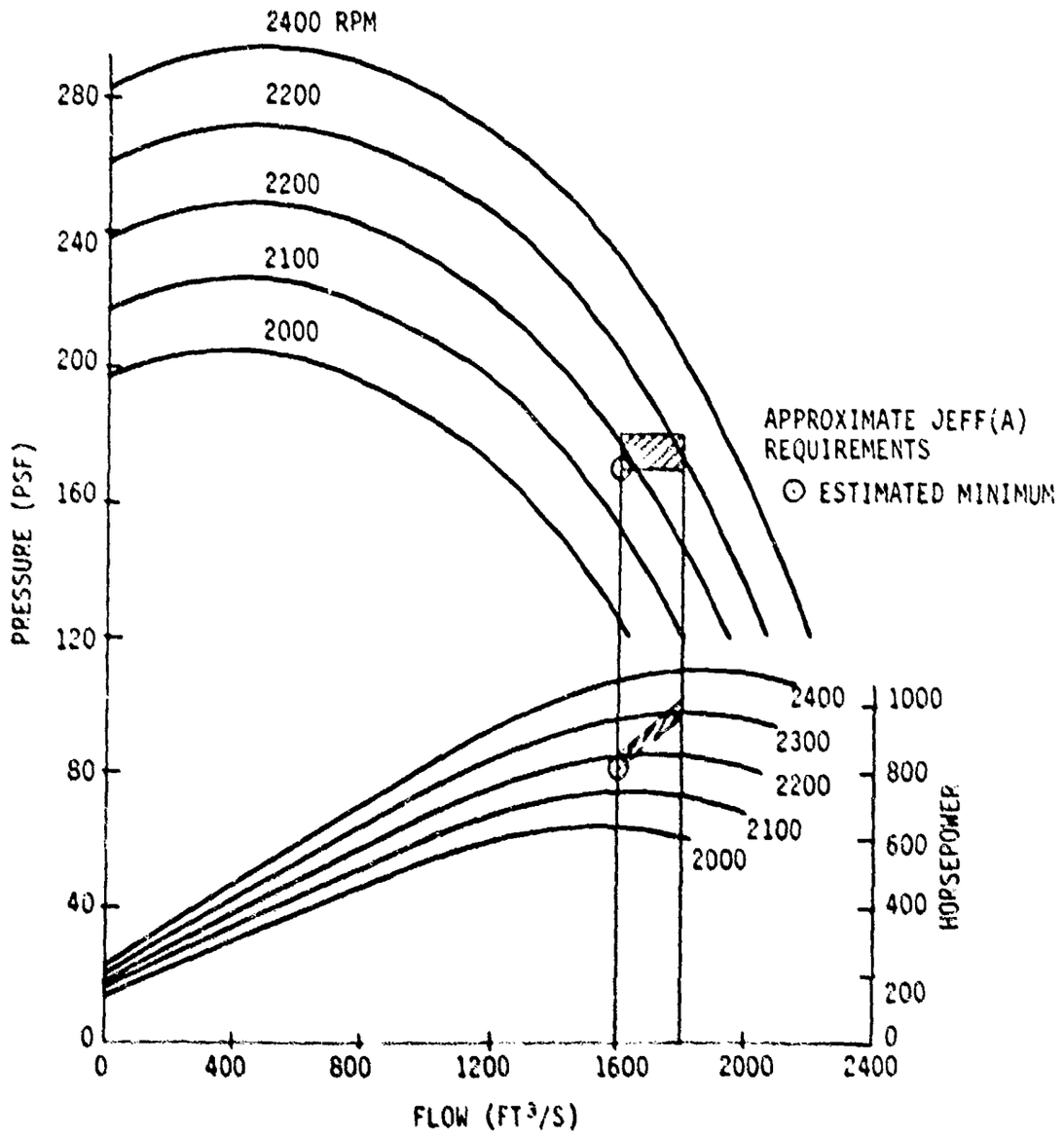

Figure 141 FULL-SCALE PERFORMANCE OF JEFF(B) IMPELLER IN BELL-DESIGNED VOLUTE, BASED ON MODEL TEST DATA (59°), 49.5-INCH DIAMETER

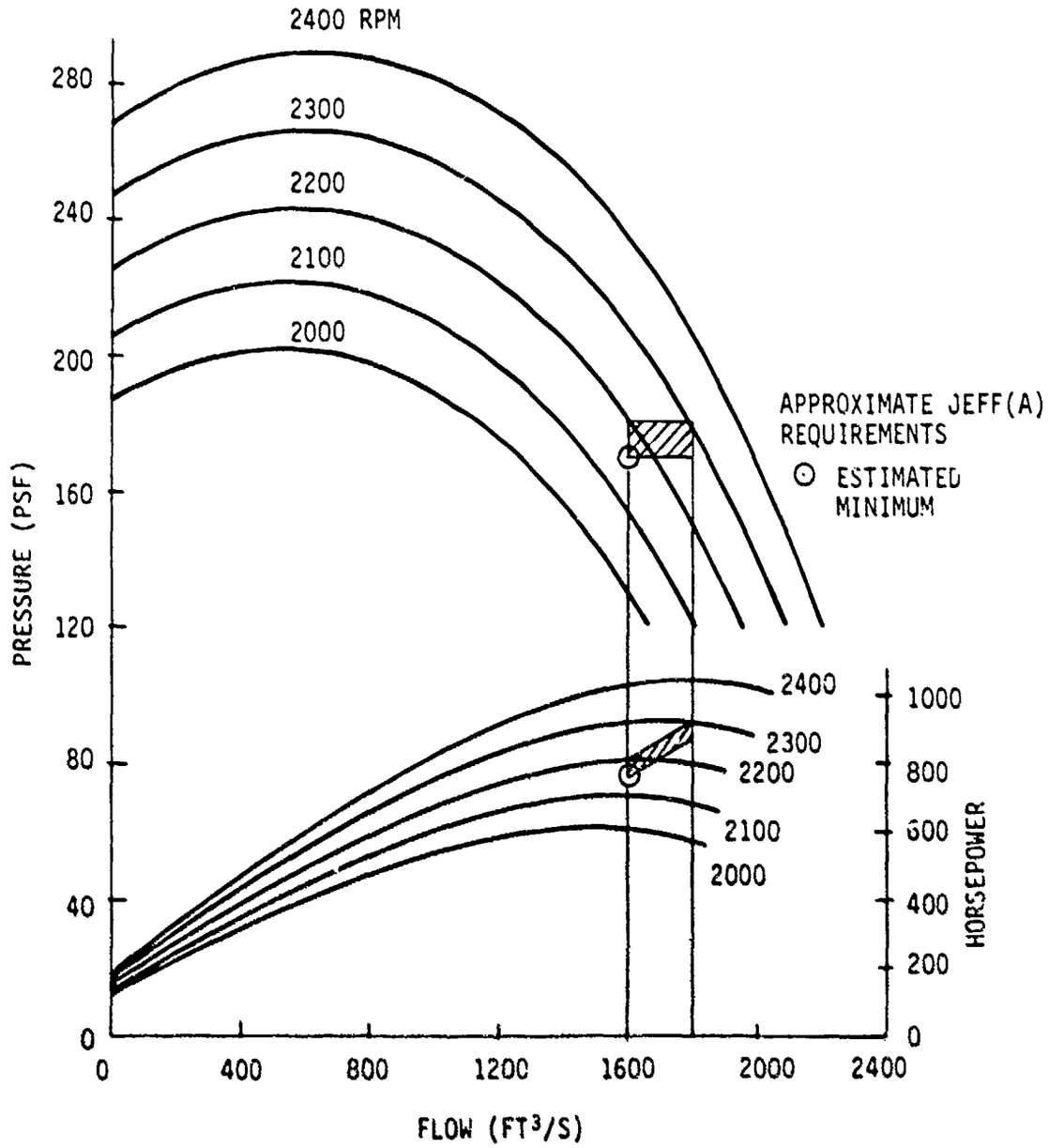

Figure 142 FULL-SCALE PERFORMANCE OF JEFF(B) IMPELLER IN JEFF(A) VOLUTE, BASED ON MODEL TEST DATA (59°F), 49.5-INCH DIAMETER

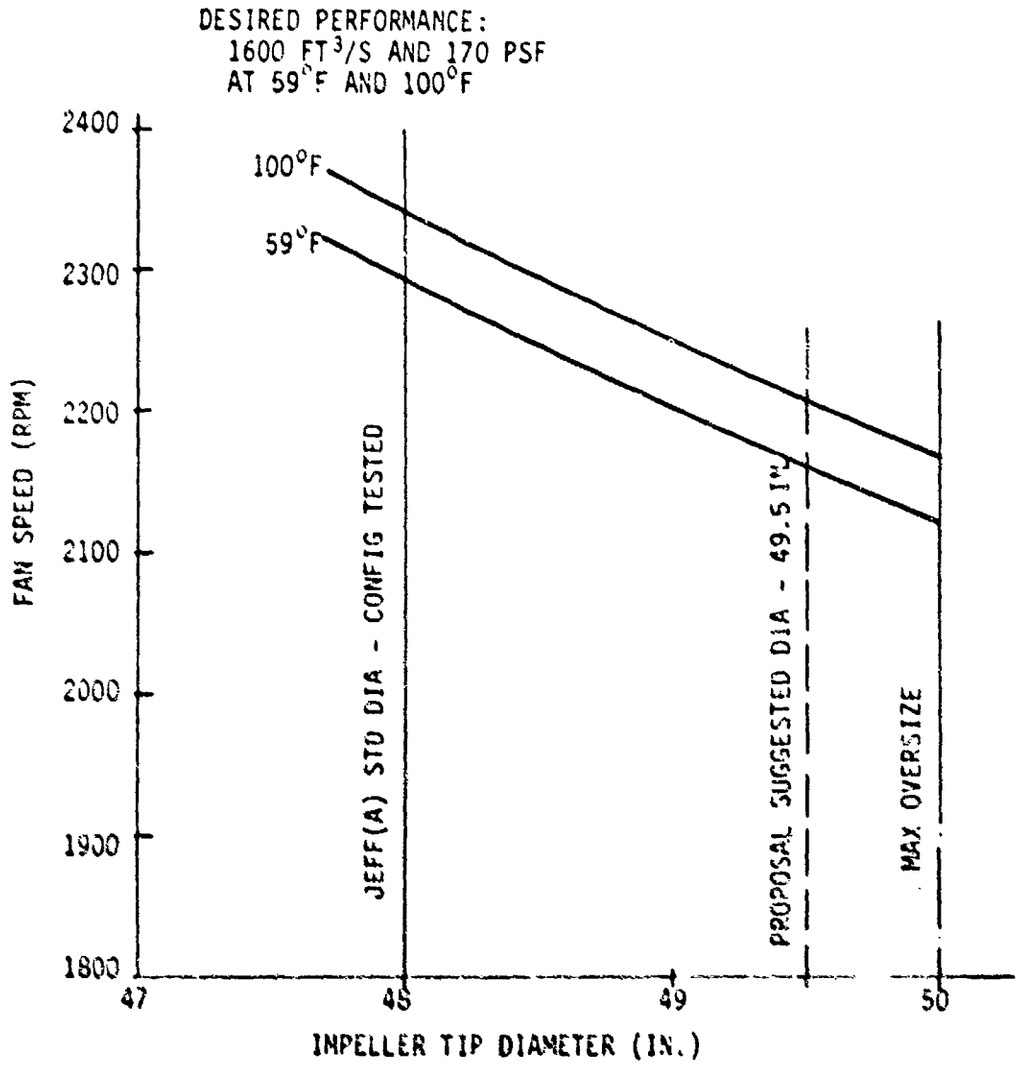

Figure 143 RELATIONSHIP OF SPEED AND DIAMETER FOR JEFF(B) IMPELLER IN JEFF(A) VOLUTE TO GIVE DESIRED JEFF(A) PERFORMANCE

8. CONCLUSIONS

1. The performance of the 12-inch-diameter JEFF(B) model fan impeller met the performance goal based on the proposal predictions in the Bell-designed volute, Configuration 3, for both pressure/flow and efficiency (see figures 129 and 135).

However, the shapes of the pressure/flow and efficiency curves were a little different from the proposal predictions.

2. The performance goal for the Bell-designed volute was also closely matched when the impeller operated in the model JEFF(A) volute, Configuration 5. The pressure/flow goal was slightly exceeded and the efficiency was slightly lower than in the Bell-designed volute.

Accordingly, the performance in the JEFF(A) volute was better than expected (see figures 129 and 136).

3. The efficiency in the log spiral volute was disappointing, although the pressure/flow goal was closely approached. However, time prevented optimisation of this configuration.

The log spiral volute configuration was judged impractical for AALC use due to its height.

4. The JEFF(B) impeller, when scaled to a diameter between 48 and 49.5 inches, is a suitable replacement for the original JEFF(A) fans. The pressure/flow requirements can be met at a lower fan speed (2160 to 2290 rpm at 59°F, depending on diameter, see figure 143) in comparison with the original JEFF(A) fan speed of 2410 to 2453 rpm. If the existing JEFF(A) volutes are used, the horsepower will be a little higher, due to the slightly lower efficiency. If the Bell-designed volutes are used, the fan speeds will be a little different from the figures given above, ie, 2170 to 2280 rpm, depending on diameter, but the horsepower will be insignificantly different from that which was quoted by ALRC for the original JEFF(A) fans.

The full-scale performance predictions will be found in dimensional form in figures 137 through 142.

5. Extensive pressure and velocity surveys have been carried out for three volute configurations, including some for which no previous results are known.

The nature of the flow in a centrifugal fan volute and diffuser has been shown to be highly complex and more variable with fan operating point than was thought previously.

6. The results confirmed the characterization of the JEFF(B) fan as a high capacity machine having a high operating point efficiency equal to that of fans with much higher peak efficiency when operating at an equivalent flow coefficient.

7. The fan exhibited two mild stall points; one at a flow coefficient of 0.715 to 0.20, which caused a slight depression in the pressure flow characteristic, and the other at a flow coefficient of about 0.075. Based on many years experience, both at full scale and model scale, with numerous fan characteristics, it was concluded that these stall points were of no operational significance.

9. RECOMMENDATIONS.

1. It is recommended that scaled JEFF(B) fan impellers be considered as direct replacements for the existing JEFF(A) fan impellers. The grounds for this recommendation are:

(a) The desired performance can be obtained at a lower fan speed and, therefore, lower stress.

(b) There is a range of fan speed and diameter which will satisfy the requirements, enabling the best match with the engine characteristics to be obtained.

(c) The existing volutes on the JEFF(A) can be used with only a small power penalty.

(d) The JEFF(B) impeller is inherently stronger than the original JEFF(A) impeller, and has been demonstrated to be structurally adequate at comparable speeds by hundreds of hours of full-scale operation.

2. Additional programs of this type should be funded by the Navy in view of the large amount of information which can be generated for relatively small cost. However, the amount of work attempted under the present contract was probably too ambitious for the level of funding available.

BIBLIOGRAPHY

1. Eck, Bruno, *Fans*, transl. Azad, Ram S. and Scott, David R., (Pergamon Press, 1973).

2. *Fan Engineering*, ed. Jorgensen, Robert, 7th edition (Buffalo, New York: Buffalo Forge Company, 1970), 7th edition.

3. Koráts, André, *Design and Performance of Centrifugal and Axial Flow Pumps and Compressors* (New York: Macmillan Co., 1964).

4. Osborne, William C., *Fans*, (Pergamon Press, 1966).

5. Stepanoff, A. J., *Turboblowers: Theory, Design and Application of Centrifugal and Axial Flow Compressors and Fans*, (New York: Wiley, 1955).

APPENDIX A

DATA REDUCTION PROGRAM FOR FAN PERFORMANCE

```
L.0001        DIMENSION DATEX(2),TOTP(60),STAP(60),CFM(60),BHP(60),ME(60),SE(60)
L.0002       1,PHI(60),PSIT(60),PSIS(60),FHI(60),VELP2(60)
L.0003       2,APHI(60),AFHI(60),APSIT(60),APSIS(60),AME(60),ASE(60)
L.0004        DIMENSION XNP(60),XNP2(60)
L.0005        DIMENSION XABC(30),YORD(30)
L.0006        REAL K,ME
L.0007  C
L.0008  C
L.0009  C                    AMCA NOZZLE DATA REDUCTION PROGRAM
L.0010  C
L.0011  C
L.0012        CALL RDATE(DATEX)
L.0013        WRITE(6,10)(DATEX(I),I=1,2)
L.0014     10 FORMAT(7X,'TODAYS DATE IS',1X,2A4,/,/,/)
L.0015  C
L.0016        I=1
L.0017        JN=1
L.0018        KN=1
L.0019  C
L.0020  C
L.0021        CALL IN2(5,VLUTE,UBD,ANGL,AEV,ENTRY)
L.0022        CALL IN2(5,D,WF,DONE,B2)
L.0023      9 CALL IN2(5,NRUN,DIA6,BETA,LBETA,TARM)
L.0024     11 CALL IN2(5,AREA2,AREA5,TARE,DUCT,DLT)
L.0025        WRITE (6,2011)
L.0026   2011 FORMAT(1X,/,'IF NO PRINT IS DESIRED, ENTER 0.  OTHERWISE ENTER 1 '
L.0027       *,/,/)
L.0028        CALL IN2(9,IPRINT)
L.0029        IF (IPRINT .EQ. 0) GO TO 1112
L.0030        WRITE(6,20)
L.0031     20 FORMAT(34X'CENTRIFUGAL FAN TEST DATA REDUCTION PROGRAM',
L.0032       1/34X'*****************************************************',
L.0033       2/39X'(AMCA STANDARD 210-67, FIGURE 4.3)'//)
L.0034  C
L.0035        IF(VLUTE) 1,2,3
L.0036      1 CONTINUE
L.0037        WRITE(6,4) UBD,AEV
L.0038      4 FORMAT(30X'VOLUTE TYPE -  HERA-2',/,30X'U/BD**2 = ',F5.3,/,30X
L.0039       *'VOLUTE EXIT AREA = ',F7.2,' SQ. IN.'//)
L.0040        GO TO 5
L.0041      2 CONTINUE
L.0042        WRITE(6,6) ANGL,AEV
L.0043      6 FORMAT(30X'VOLUTE TYPE - LOG-SPIRAL'/30X'SPIRAL ANGLE = ',F6.3,' D
L.0044       *EGREES'/30X'VOLUTE EXIT AREA = ',F6.2,' SQ. IN.'//)
L.0045        GO TO 5
L.0046      3 CONTINUE
L.0047        WRITE(6,7) AEV
L.0048      7 FORMAT(30X'VOLUTE TYPE - ARITH.SPIRAL'/30X'VOLUTE EXIT AREA '
L.0049       *,F6.2,' SQ. IN.'//)
L.0050      5 CONTINUE
L.0051        WRITE(6,8) D,WF,DONE,B2,DIA6,BETA,LBETA,TARM,AREA2,AREA5
L.0052      8 FORMAT(30X'IMPELLER OUTSIDE DIAMETER (INCHES)',F17.3,
L.0053       A/30X'IMPELLER WIDTH FACTOR (SINGLE WIDTH FAN)',F11.3,
L.0054       B/30X'IMPELLER INSIDE DIAMETER (INCHES)',F18.3,
L.0055       C/30X'IMPELLER EXIT BLADE ANGLE (DEGREES)',F16.3,
L.0056       E/30X'NOZZLE DIAMETER (INCHES)',F27.3,
L.0057       F/30X'INCLINATION OF MANOMETER BANKS (DEGREES)',F11.3,
L.0058       X/30X'INCLINATION OF DIFF. MAN. (DEGREES)',F16.3,
L.0059       G/30X'TORQUE ARM LENGTH (INCHES)',F25.3,
L.0060       H/30X'DUCT AREA TO CHAMBER (SQFT)',F24.3,
L.0061       J/30X'DUCT AREA UPSTREAM OF NOZZLE (SQFT)',F16.3)
L.0062   1112 CONTINUE
L.0063     12 CALL IN2(5,BPA,DBA,WBA)
L.0064  C
```

```
L.0065  C                          DENSITIES
L.0066  C
L.0067    13  SVP  =2.9599E-4*WBA**2.-1.5927E-2*WBA+.4102
L.0068        PVP  =SVP-(BPA*(DBA-WBA)/2700.)
L.0069        DENA =(70.73*(BPA-.378*PVP))/(53.35*(DBA+459.7))
L.0070        DENS =0.075
L.0071  C
L.0072  C
L.0073  C
L.0074    14  CALL IN2(5,RPM,WGT,SF7,SF5,FD,DB2,DB5,CONTRL)
L.0075    15  SF5  =SF5*SIN(BETA/57.297)
L.0076        SF7  =SF7*SIN(BETA/57.297)
L.0077        FD   =FD*SIN(DBETA/57.297)
L.0078  C
L.0079    16  DEN5 =DENA*((459.7+DBA)/(459.7+DB5))*((BPA+(SF5/13.62))/BPA)
L.0080        SF2  =SF7
L.0081        DEN2 =DENA*((459.7+DBA)/(459.7+DB2))*((BPA+(SF2/13.62))/BPA)
L.0082        DENW=1.951578734+0.254549317*(459.7+DBA)-2.09597115E-04*(459.7+DBA
L.0083       1)**2-2.790905018E-07*(459.7+DBA)**3+3.277684262E-10*(459.7+DBA)**4
L.0084  C
L.0085  C
L.0086    36  CONTINUE
L.0087        IF(KK.EQ.1)GO TO 33
L.0088        GO TO 32
L.0089    33  CONTINUE
L.0090        IF (IPRINT .EQ. 0) GO TO 1113
L.0091        WRITE(6,34) BPA,DBA,WBA,DENW,DENA
L.0092    34  FORMAT(//30X'BAROMETER HEIGHT (INCHES OF MERCURY)',F15.3,
L.0093       L/30X'AMBIENT AIR TEMPERATURE (DEGREES F)',F16.3,
L.0094       M/30X'WET BULB TEMPERATURE (DEGREES F)',F19.3,
L.0095       N/30X'WATER DENSITY (LBS/CUFT)',F27.3,
L.0096       P/30X'AMBIENT AIR DENSITY (LBS/CUFT)',F24.6,///)
L.0097  1113 CONTINUE
L.0098        KK=0
L.0099  C
L.0100  C
L.0101    35  CONTINUE
L.0102        NNRPM=RPM
L.0103        IF (IPRINT .EQ. 0) GO TO 1114
L.0104        WRITE(6,30) NNRPM
L.0105    30  FORMAT(T21,'FAN SPEED = ',I5,' RPM'/,T21,21('*'),/,/
L.0106       A,T21,'PHI',T29,'PHI',T37,'PSI',T45,'PSI',T53,'ETA',T61,'ETA',T70,
L.0107       B'Q',T76,'PRESS',T84,'PRESS',T93,'HP',T101,'HP'/
L.0108       C,T36,'TOTAL',T44,'STATIC',T52,'TOTAL',T60,'STATIC',T69,'CFM ',T76,
L.0109       D'TOTAL',T84,'STATIC'/)
L.0110  1114 CONTINUE
L.0111    32  CONTINUE
L.0112  C
L.0113  C                          COEFFICIENT OF EXPANSION
L.0114  C
L.0115        RAT1 =1.-(.002454*(DENS/DEN5)*FD)
L.0116        K    =1.40
L.0117        CON1 =K/(K-1.)
L.0118        CON2 =2./K
L.0119        CON3 =(K-1.)/K
L.0120  C
L.0121        PI   =3.1415926
L.0122  C
L.0123    17  AREA6=PI*DIA6**2./4./144.
L.0124    18  EXP1 =CON1*(RAT1**CON2)
L.0125        EXP2 =1.-(RAT1**CON3)
L.0126        EXP3 =1.-RAT1
L.0127        EXP4 =1.-(AREA6**2./AREA5**2.)
L.0128        EXP5 =1.-((RAT1**CON2)*(AREA6**2./AREA5**2.))
L.0129        IF(FD.EQ.0.)GO TO 41
L.0130        YCOF =SQRT(EXP1*EXP2/EXP3)*SQRT(EXP4/EXP5)
L.0131        GO TO 21
```

```
L.0132  C                    COEFFICIENT OF DISCHARGE
L.0133     41  YCOF =1.0
L.0134     21  RENO =(411000.*DIA6/12.*YCOF*SQRT(DENS*PD/DEN5))/SQRT(EXP4)
L.0135     22  IF(RENO.LT.30001.)GO TO 25
L.0136         IF(RENO.LT.100001.)GO TO 26
L.0137         IF(RENO.LT.350001.)GO TO 27
L.0138         GO TO 28
L.0139  C
L.0140     25  CO6  =.8746139+1.54579745E-5*RENO-1.30831012E-9*(RENO**2.)
L.0141        1+5.96186193E-14*(RENO**3.)-1.32826681E-18*(RENO**4.)
L.0142        2+1.12888606E-23*(RENO**5.)
L.0143         GO TO 29
L.0144     26  CO6  =.6892462+2.08224462E-5*RENO-6.02082031E-10*(RENO**2.)
L.0145        1+8.63182281E-15*(RENO**3.)-6.06992050E-20*(RENO**4.)
L.0146        2+1.67242754E-25*(RENO**5.)
L.0147         GO TO 29
L.0148     27  CO6  =.9240123+1.43400064E-6*RENO-1.28799635E-11*(RENO**2.)
L.0149        1+5.79837931E-17*(RENO**3.)-1.26629424E-22*(RENO**4.)
L.0150        2+1.06633774E-28*(RENO**5.)
L.0151         GO TO 29
L.0152     28  CO6  =0.994
L.015   C
L.0154  C                         CALCULATIONS
L.0155  C
L.0156     29  CFM5 =1096.7*CO6*AREA6*YCOF*SQRT(PD/DEN5)
L.0157         VEL2 =CFM5*DEN5/AREA2/DEN2
L.0158         VELP2(I)=((VEL2/1096.7)**2)*DEN2
L.0159         TP2=SP2+VELP2(I)*(1+DLT/DDUCT*0.02)
L.0160         TOTP(I)=TP2
L.0161         STAP(I)=SP2
L.0162         CFM(I)=CFM5*DEN2/DENA
L.0163         WGT=WGT-TARE
L.0164         BHP(I)=2.*PI*WGT*TARM*RPM/33000./12.
L.0165         ME(I)= CFM(I)/60.*TOTP(I)/12.*DENW/BHP(I)/550.
L.0166         SE(I)=ME(I)*STAP(I)/TOTP(I)
L.0167         TP2X = (TP2+406.8)/TP2
L.0168         TP2Y = 1./TP2X + 1.
L.0169         IF(PD.LE.0.) GO TO 60
L.0170         COMP = CON1 * ME(I) * TP2X * (TP2Y ** (CON3/ME(I)) - 1.)
L.0171         IF (COMP .GE. 0.990) GO TO 60
L.0172         MESAVE = ME(I)
L.0173         ME(I) = COMP * ME(I)
L.0174         COMP = CON1 * ME(I) * TP2X * (TP2Y ** (CON3/ME(I)) - 1.)
L.0175         ME(I) = COMP * MESAVE
L.0176     60 CONTINUE
L.0177         VT=PI*D*RPM/60./12.
L.0178         VFAN=60.*PI*D**2.*VT*ENTRY/144.
L.0179         PHI(I)=CFM(I)/VFAN/WF
L.0180         PSIT(I)=TOTP(I)/(DENA/32.17)/VT**2*DENW/12.
L.0181         PSIS(I)=PSIT(I)*STAP(I)/TOTP(I)
L.0182         PHI(I)=CFM(I)/VFAN*4.
L.0183         IF(PD.LE.0.) GO TO 61
L.0184         XNP(I) = PHI(I) * PSIT(I) / ME(I)
L.0185         XNP2(I)=PHI(I)*PSIT(I)/ME(I)
L.0186  C
L.0187  C
L.0188         GO TO 62
L.0189     61  CONTINUE
L.0190         XNP(I)=(550.*BHP(I))/((DENA/32.17*)*PI*(D/12.)**2*WF*VT**3)
L.0191         XNP(I)=XNP(I)/ENTRY
L.0192         XNP2(I)=XNP(I)*WF*4.
L.0193     62  CONTINUE
L.0194  C
L.0195         N=I
L.0196         I=I+1
L.0197         IF(CONTRL)31,14,31
L.0198     31  CONTINUE
L.0199         IF (IPRINT .EQ. 0) GO TO 1115
L.0200         WRITE(6,37) (PHI(J),PHI(J),PSIT(J),PSIS(J),ME(J),SE(J),CFM(J),
L.0201        1TOTP(J),STAP(J),BHP(J),XNP(J),J=JK,N)
L.0202     37 FORMAT (16X,6F8.4,F9.1,F7.3,3F8.3)
L.0203   1115 CONTINUE
```

```
L.0277    505 CONTINUE
L.0278        YSCALE = 0.1
L.0279        YBEGIN = 0.0
L.0280        GO TO 3000
L.0281   3000 CONTINUE
L.0282        CALL RAXIS(XSTART,YSTART,DUM,DUM,XLWIDE,0.0,XBEGIN,XSCALE)
L.0283        CALL RAXIS(XSTART,YSTART,DUM,DUM,YLTALL,90.,YBEGIN,YSCALE)
L.0284        CALL RPLOT(XSTART,YSTART,-3)
L.0285        CALL TAGGIT
L.0286        XABC(J+1) = XBEGIN
L.0287        XABC(J+2) = XSCALE
L.0288        YORD(J+1) = YBEGIN
L.0289        YORD(J+2) = YSCALE
L.0290        CALL RLINE(XABC,YORD,J,1)
L.0291        CALL RPLOT(-XSTART,-YSTART,-3)
L.0292        CALL TAGGIT
L.0293        GO TO 1000
L.0294    106 CONTINUE
L.0295        KK=1
L.0296        JK=I
L.0297        IF(CONTRL)12,12,38
L.0298     38 CONTINUE
L.0299        STOP
L.0300        END
L.0301        SUBROUTINE TAGGIT
L.0302        CALL BUFDMP
L.0303        WRITE (6,1000)
L.0304   1000 FORMAT('PLTT')
L.0305        RETURN
L.0306        END
```

```
L.0204        WRITE (6,2020)
L.0205   2020 FORMAT(/,'TO SKIP ALL PLOTTING, ENTER 1 '/'TO PLOT PHI VS. ANY VAR
L.0206       $IABLE, ENTER 2 '/'TO PLOT PHI VS. ANY VARIABLE, ENTER 3'///)
L.0207        CALL IN2(9,NABCSA)
L.0208        GO TO (106,1116,1117), NABCSA
L.0209   1116 DO 444 J=1,N
L.0210        XABC(J) = PHI(J)
L.0211    444 CONTINUE
L.0212        GO TO 555
L.0213   1117 DO 555 J=1,N
L.0214        XABC(J) = PHI(J)
L.0215    555 CONTINUE
L.0216        XSTART = 1.0
L.0217        XBEGIN = 0.0
L.0218        XSCALE = 0.1
L.0219        XLWIDE = 5.0
L.0220        YSTART = 1.0
L.0221        YBEGIN = 0.0
L.0222        YSCALE = 0.1
L.0223        YLTALL = 8.0
L.0224        ASSIGN 101 TO NUMBER
L.0225   1000 GO TO NUMBER,(101,102,103,104,105,106)
L.0226    101 WRITE (6,2001)
L.0227        ASSIGN 102 TO NUMBER
L.0228   2001 FORMAT(/,'TO PLOT ORDINATE PSI TOTAL, ENTER 1; OTHERWISE ENTER 0'
L.0229       $///)
L.0230        CALL IN2(9,IGRAPH)
L.0231        IF (IGRAPH .EQ. 0) GO TO 1000
L.0232   1001 DO 501 J = 1,N
L.0233        YORD(J) = PSIT(J)
L.0234    501 CONTINUE
L.0235        GO TO 3000
L.0236    102 WRITE (6,2002)
L.0237        ASSIGN 103 TO NUMBER
L.0238   2002 FORMAT(/,'TO PLOT ORDINATE PSI STATIC, ENTER 1; OTHERWISE ENTER 0'
L.0239       $///)
L.0240        CALL IN2(9,IGRAPH)
L.0241        IF (IGRAPH .EQ. 0) GO TO 1000
L.0242   1002 DO 502 J =1,N
L.0243        YORD(J) = PSIS(J)
L.0244    502 CONTINUE
L.0245        GO TO 3000
L.0246    103 WRITE (6,2003)
L.0247        ASSIGN 104 TO NUMBER
L.0248   2003 FORMAT(/,'TO PLOT ORDINATE ETA TOTAL, ENTER 1; OTHERWISE ENTER 0 '
L.0249       $///)
L.0250        CALL IN2 (9,IGRAPH)
L.0251        IF (IGRAPH .EQ. 0) GO TO 1000
L.0252   1003 DO 503 J =1,N
L.0253        YORD(J) = ME(J)
L.0254    503 CONTINUE
L.0255        YSCALE = 0.2
L.0256        YBEGIN = -0.8
L.0257        GO TO 3000
L.0258    104 WRITE (6,2004)
L.0259        ASSIGN 105 TO NUMBER
L.0260   2004 FORMAT(/,'TO PLOT ORDINATE ETA STATIC, ENTER 1; OTHERWISE ENTER 0
L.0261       $///)
L.0262        CALL IN2 (9,IGRAPH)
L.0263        IF (IGRAPH .EQ. 0) GO TO 1000
L.0264   1004 DO 504 J = 1,N
L.0265        YORD(J) = SE(J)
L.0266    504 CONTINUE
L.0267        YSCALE = 0.2
L.0268        YBEGIN = -0.8
L.0269        GO TO 3000
L.0270    105 WRITE (6,2005)
L.0271        ASSIGN 106 TO NUMBER
L.0272   2005 FORMAT(/,'TO PLOT ORDINATE XKP, ENTER 1; OTHERWISE ENTER 0'///)
L.0273        CALL IN2 (9,IGRAPH)
L.0274        IF (IGRAPH .EQ. 0) GO TO 1000
L.0275   1005 DO 505 J = 1,N
L.0276        YORD(J) = XKP(J)
```