LEVEL III

A058803

DAVID W. TAYLOR NAVAL SHIP RESEARCH AND DEVELOPMENT CENTER

Bethesda, Md. 20084

AD A058805

(6) ORIGIN AND SUBSEQUENT MODIFICATIONS OF EXPLOSIVE SAFETY QUANTITY-DISTANCE (ESQD) STANDARDS FOR MASS DETONATING EXPLOSIVES WITH SPECIAL REFERENCE TO NAVAL VESSELS.

(10)

VOLUME II. APPENDICES.

(9) Final rept.,

By

(10) David Freund

DDC
RECEIVED
SEP 19 1978
F

APPROVED FOR PUBLIC RELEASE: DISTRIBUTION UNLIMITED

STRUCTURES DEPARTMENT

SHIP PROTECTION DIVISION

(14) DTNSRDC/SD-78-5

2004 1208 443

May 1978

(11)

(12) 394p.

Enclosure (2) to DTNSRDC
ltr 78-174-151
SD-78-5

78 09 18 026 387 698

BEST AVAILABLE COPY

SECURITY CLASSIFICATION OF THIS PAGE (When Data Entered)

REPORT DOCUMENTATION PAGE

READ INSTRUCTIONS BEFORE COMPLETING FORM

1. REPORT NUMBER
DTNSRDC/SD-78-5

2. GOVT ACCESSION NO.

3. RECIPIENT'S CATALOG NUMBER

4. TITLE (and Subtitle)
Origin and Subsequent Modifications of Explosive Safety Quantity-Distance (ESQD) Standards for Mass Detonating Explosives, With Special Reference to Naval Vessels - Volume II Appendices

5. TYPE OF REPORT & PERIOD COVERED
Final report

6. PERFORMING ORG. REPORT NUMBER

7. AUTHOR(s)
David Freund

8. CONTRACT OR GRANT NUMBER(s)

9. PERFORMING ORGANIZATION NAME AND ADDRESS
David W. Taylor Naval Ship R&D Center
Bethesda, MD 20084

10. PROGRAM ELEMENT, PROJECT, TASK AREA & WORK UNIT NUMBERS
NIF 1-1740-200

11. CONTROLLING OFFICE NAME AND ADDRESS
Naval Surface Weapons Center (CR-10)
White Oak Laboratory
Silver Spring, MD 20910

12. REPORT DATE
May 1978

13. NUMBER OF PAGES
289

14. MONITORING AGENCY NAME & ADDRESS(if different from Controlling Office)

15. SECURITY CLASS. (of this report)
UNCLASSIFIED

15a. DECLASSIFICATION/DOWNGRADING SCHEDULE

16. DISTRIBUTION STATEMENT (of this Report)
Approved for Public Release: Distribution Unlimited

17. DISTRIBUTION STATEMENT (of the abstract entered in Block 20, if different from Report)

18. SUPPLEMENTARY NOTES
Prepared with the cooperation of the Department of Defense Explosives Safety Board during a 6-month temporary assignment at their offices, wherein are located their library and archives which formed the underlying data for this study.

19. KEY WORDS (Continue on reverse side if necessary and identify by block number)
Quantity-Distance Standards, Q-D Standards, Explosives Handling, Explosives Safety, Ordnance Handling, Ordnance Safety, Explosives Safety Quantity-Distance Standards, ESQD Standards, Department of Defense Explosives Safety Board

20. ABSTRACT (Continue on reverse side if necessary and identify by block number)
This report details the origin and subsequent modifications made over time to the Department of Defense Explosive Safety Quantity-Distance (ESQD) Standards for mass detonating explosives, especially those related to submarine tender operations. These standards are based upon the reasoned deliberations of the Department of Defense Explosives Safety Board (DDESB) since its inception in 1928 to the present. Investigation of these ESQD Board standards was accomplished primarily by studying the official historical

DD FORM 1 JAN 73 1473 EDITION OF 1 NOV 65 IS OBSOLETE
S/N 0102-014-6601

UNCLASSIFIED
SECURITY CLASSIFICATION OF THIS PAGE (When Data Entered)

20. ABSTRACT (continued)

volumes at the DDESB which detailed the technical data, administrative and military constraints, and accidental and test explosions experience upon which the judgments of Board members were based.

Volume I summarized the overall ESQD problem, including its background. A brief overview and summary is given therein of (1) the materials investigated and reported upon, and (2) the origins and modifications to the ESQD standards. Conclusions drawn and references studied are also included.

Volume II consists solely of the appendices referred to in Volume I.

TABLE OF CONTENTS

	Page
LIST OF TABLES	iv
ABSTRACT	1
ADMINISTRATIVE INFORMATION	1
DISCLAIMER	1
ACKNOWLEDGEMENTS	2
REFERENCES	3
APPENDIX A -- DETAILED SUMMARY OF MATERIALS STUDIED AT THE DDESB	5
APPENDIX B -- DETAILED SUMMARY OF DATA STUDIED IN THE DDESB HISTORICAL VOLUMES ("MINUTES OF MEETINGS")	25
APPENDIX C -- INDEX TO SUBJECTS DISCUSSED IN DDESB HISTORICAL VOLUMES	205
APPENDIX D -- REPRODUCED MATERIALS FROM THE "MINUTES OF MEETINGS" OF THE DDESB	231

ACCESSION for
NTIS White Section
DDC Buff Section
DISTRIBUTION/AVAILABILITY CODES
A

LIST OF TABLES

	Page
A-1 - Summary of Information Organization in DDESB "Minutes of Meetings".	7
A-2 - Highlights from Summary Notes of B.L. Knasel, DDESB.	13
A-3 - Data Extracted from Index to Meetings of DDESB	17
A-4 - Summary of Materials Reproduced from "Minutes of Meetings" of DDESB.	19
A-5 - Technical Papers Published by the DDESB.	21
A-6 - Seminars Held by the Department of Defense Explosives Safety Board	22
B-1 - Data Related to Explosives Safety Quantity-Distance Rules Extracted from Unclassified DDESB Official Historical Volumes	27
B-2 - Data Related to Explosives Safety Quantity-Distance Rules Extracted from Classified DDESB Official Historical Volumes	202
C-1 - Headings from Alphabetical Index to DDESB Historical Files	206

ABSTRACT

This report details the origin and subsequent modifications made over time to the Department of Defense Explosive Safety Quantity-Distance (ESQD) Standards for mass detonating explosives, especially those related to submarine tender operations. These standards are based upon the reasoned deliberations of the Department of Defense Explosives Safety Board (DDESB) since its inception in 1928 to the present. Investigation of these ESQD Board standards was accomplished primarily by studying the official historical volumes at the DDESB which detailed the technical data, administrative and military constraints, and accidental and test explosions experience upon which the judgments of Board members were based.

Volume I summarized the overall ESQD problem, including its background. A brief overview and summary is given therein of (1) the materials investigated and reported upon, and (2) the origins and modifications to the ESQD standards. Conclusions drawn and references studied are also included.

Volume II consists solely of the appendices referred to in Volume I.

ADMINISTRATIVE INFORMATION

This study was performed for the Naval Surface Weapons Center White Oak Laboratory (NSWC/WOL) in support of the Naval Sea Systems Command Program for Test and Evaluation of Explosive Safety Criteria. Funding support was furnished by NSWC/WOL Purchase Order N60921-77-PO W00062 of 1 Dec 1976, and Work Request WR N60921-78-WR-W0059 of 28 Oct 1978.

DISCLAIMER

Irrespective of the copious assistance of Board personnel during the performance of this study, it should be clearly understood that any data paraphrased or conclusions stated in this report solely reflect the views of the author. Errors of summation or interpretation of the facts as read and understood are the responsibility of the author and the statements made in this report do not necessarily reflect the views, agreement, or endorsement of the DDESB.

ACKNOWLEDGEMENTS

Technical personnel of the DDESB contributed most generously of their time and expertise during the six-month period, Nov. 1976 to May 1977, during which time the Board's historical files and library were used for this study. The author is most appreciative of the guidance and background provided by these discussions. While all personnel consulted were most helpful, special thanks are due to Dr. T. A. Zaker and R. G. Perkins (Director) of the DDESB Technical Programs Division. It would not be possible to carry out a massive literature survey such as this one, covering the 49-year existence of the DDESB within such a relatively short time without the generous help and cooperation of the clerical and administrative personnel responsible for the maintenance of the files and documents consulted. J. Snyder, G. Bachman, M. E. Simms, M. Willis, and B. J. Mast were all cooperative, friendly, and helpful. Their assistance and pleasant ambience are sincerely appreciated.

REFERENCES

1. "The Port Chicago, California Ship Explosion of 17 July 1944," Army-Navy Explosives Safety Board, Technical Paper No. 6, March 1948.

2. Haman, R. C., "The Explosion of the USS Mount Hood, Seeadler Harbor, Manus Island, 10 November 1944," Summary and Analysis of Navy Board of Investigation Official Report (File SC-A-1725/AE11, Document No. 185944) of 6 June 1951.

3. "The Blast Effects of the Explosion at South Amboy, New Jersey on 19 May 1950," prepared by Air Force Special Weapons Command, 27 July 1950.

4. "Court of Inquiry: USS SOLAR (DE-221), 30 April 1946," Office of the Judge Advocate General, August 1946.

THIS PAGE INTENTIONALLY LEFT BLANK.

APPENDIX A

DETAILED SUMMARY OF MATERIALS STUDIED AT THE DDESB

All of the materials studied or considered as potential sources of data for this report are noted and summarized in some detail in this appendix. Where extensive notes or analyses of these sources were made, these additional data are presented in the remaining Appendices of this report.

Table A-1 (tables appear at the end of each appendix in order not to disrupt text continuity) summarizes the volumes investigated of the DDESB'S "Minutes of Meetings." Noted are the page numbers for each volume, range of dates covered, number of the Board meetings covered and associated dates given in each volume. The actual notes taken from these volumes are shown in Appendix B. These volumes were last viewed on 19 April 1977, and at that time, were numbered up to Volume 41* (up to page 17,590). The last-placed document in this volume was then dated 28 March 1977. Data concerning all 276 meetings of the DDESB held to this date were then (included in these volumes.

In March 1976, Mr. B. L. Knasel of the Operations Division, DDESB,** made a broad overview summary of all the information contained in the "Minutes of Meetings" of the Board. Even though this summary was not limited to matters relating to ESQD standards, it was considered of interest to this project and read. Highlights from this summary pertaining to the subject topic are shown in Table A-2.

The Secretary to the Chairman, DDESB, maintains a subject matter index of information contained within the "Minutes of Meetings" of the Board.*** This index was searched to make doubly sure that no data within the "Minutes of Meetings" were inadvertently omitted from the summary shown in Appendix B. The headings for the various cards in this index are shown in Appendix C as a complement to the data in Appendix B. Information considered of special interest to this project, contained on file cards labeled "Tenders" and "Torpedoes", is shown in Table A-3.

The actual verbatim transcripts of deliberations of the DDESB, presented in the "Minutes of Meetings" of the Board, are considered privileged information.** However, much additional information besides resumes and verbatim transcripts of formal Board meetings is contained in these documents. These include correspondence, memoranda, formal working papers, tentative draft documents, etc. Several of these documents which were not privileged seemed to be of special significance to this project

---

* Refiling and neatening of these files may result in some changes in the numbers of each individual volume; however, the numbers shown for each page of data will remain the same.

** Personal communications with this gentlemen, 25 November 1976.

***Personal communication: Ms B. J. Mast, Office of the Chairman, DDESB, 31 January 1977.

either because of their specific relevance or else because of their descriptions of workings (or enlarged responsibilities) of the Board. These documents were reproduced, with the permission and assistance of personnel at the DDESB, and their contents are summarized in Table A-4. The reproduced materials are shown in Appendix D and are also indicated at the appropriate items in Table B-1.

Over the years, the DDESB has published technical papers dealing with various aspects of explosives safety. A list of these papers is given in Table A-5. With only one or two exceptions (e.g., TP-10), all of these documents are of some relevance to the topic of the origins and subsequent modifications of the ESQD standards. This is especially true of papers numbered 1, 7, 8, 12 and the unpublished document dated 1 July 1948.

In addition, since 1959, the DDESB has been the sponsor of yearly (until 1974) or bi-yearly (since 1974) explosives safety seminars. A listing of the minutes of the 17 seminars held to date is given in Table A-6. Their purpose is to discuss the latest developments, as well as current problems, related to the field of explosives safety. Attendance represents various agencies of the U.S. Government and industrial firms performing services to the Government by contract. Although the presentations and discussions have no official status, merely representing the opinions and views of the participants, questions raised and data presented at these meetings over the years have been influential in molding Board views on the topics of concern to this report. Papers of special significance in this regard have been noted elsewhere in this report and referred to in the references cited.

Finally, the enormous quantities of data contained in the technical library of the DDESB were searched, within the limits of the time available for this project, to at least ascertain the nature and quantity of the data available there. These data consisted primarily of corporate and Government laboratory documents on topics related in some way to explosives safety. These documents filled approximately 36 ft of standard library shelves. Other data included military instructions, manuals, guides, regulations, handbooks, pamphlets, and additional miscellaneous publications of the three uniformed Services.

In addition to the data noted above, the DDESB maintains in their library approximately 2500 accident reports on file covering the last 75 years or so. Such information previously has been reported upon and was not deemed directly relevant to this study of the origin and subsequent modifications of the ESQD standards except insofar as lessens learned from this wealth of experience has affected the subsequent deliberations and decisions of Board members. This is especially true for those large and significant accidents which have been carefully studied and widely reported.[1-4]*

*References are shown on page 3.

Table A-1. Summary of Information Organization in DDESB "Minutes of Meetings"*

UNCLASSIFIED VOLUMES

Vol	Pages Included	Dates Covered**	Board Meetings (Number(s)) and Associated Date(s)
1	1 - 337	5 Sep 24 - 29 May 41	1/2 Jul 28; 2/6 Aug 28; 2/11 Aug 28; 3/27 Sep 28; 4/5 Nov 28; 5/8 Jan 29; 6/4 Feb 29; 7/13 Mar 29; 8/2 May 29; 9/1 Aug 29; 10/7 Oct 29; 11/4 Dec 29; 12/10 Feb 30; 13/3 Apr 30; 14/3 Jun 30; 15/20 Aug 30; 16/24 Nov 30; 17/15 Jan 31; 18/17 Mar 31; 19/15 May 31; 20/20 Jul 31; 21/15 Sep 31; 22/14 Nov 31; 23/15 Jan 32; 24/15 Mar 32; 25/19 May 32; 26/15 Jul 32; 27/22 Sep 32; 28/25 Nov 32; 29/20 Jan 33; 30/15 Mar 33; 31/15 May 33; 32/17 Jul 33; 33/21 Sep 33; 34/5 Oct 33; 35/19 Jan 34; 36/15 Mar 34; 37/17 May 34; 38/17 Jul 34; 39/28 Sep 34; 40/1 Feb 35; 41/6 Dec 35; 42/26 Sep 36; 43/11 Nov 37; 44/11 Dec 37; 45/9 Apr 38; 46/14 Mar 39; 47/13 Aug 40; 49/29 Jan 41; 50/27 May 41.
2	338 - 669	22 Jan 42 - 24 Feb 44	51/22 Jan 42; 52/23 Feb 42; 53/11 Mar 43; 54/24 Mar 43; 55/19 Apr 43 56/12 Jul 43; 57/15 Sep 43; 58/26 Jan 44; 59/24 Feb 44.
3	670 - 1104	4 May 44 - 2 Jan 45	60/8 Apr 44; 61/4 May 44; 62/12 May 44; 63/3 Jun 44; 64/15 Jun 44; 65/7 Aug 44; 66/22 Aug 44; 67/27 Sep 44; 68/2 Oct 44; 69/7 Oct 44; 70/18 Oct 44; 71/not shown; 72/not shown; 73/13 Nov 44; 74/2 Jan 45.

* These so-called "Minutes of Meetings" of the DDESB contain not only resumes and verbatim transcripts of meeting deliberations but also extremely large quantities of related materials including official DDESB correspondence, formal publications (at various stages of review and preparation), and documentation back-up papers.

** Some overlap in dates will occur due to the time lag with some correspondence, filing idiosyncrasies, etc. Dates are usually quite consistently chronological. The largest range of dates noted are shown.

Table A-1. (Continued)

UNCLASSIFIED VOLUMES

Vol	Pages Included	Dates Covered	Board Meetings (Number(s)) and Associated Date(s)
4	1105 - 1538	8 Jan 45 - 20 Nov 45	75/15 Jan 45; 76/3 Mar 45; 77/26 Mar 45; 78/12 Apr 45; 79/17 Apr 45; 80/26 Apr 45; 81/23 May 45; 82/8 Jun 45; 83/14 Jul 45; 84/7 Aug 45; 85/20 Nov 45.
5	1539 - 2040a	31 Dec 45 - 15 Jan 48	86/4 Jan 46; 87/22 Jan 46; 88/19 Feb 46; 89/21 Mar 46; 90/2 Apr 46; 91/23 Jul 46; 92/20 Aug 46; 93/14 Nov 46; 94/14 Mar 47; 95/12 May 47; 96/9 Jun 47; 97/8 Oct 47; 98/13 Jan 48.
6	2041 - 2601	15 Jan 48 - 9 Apr 51	99/10 Nov 48; 100/23 Nov 48; 101/22 Dec 48; 102/29 Mar 49; 103/9 May 49; 104/15 Aug 49; 105/24 Oct 49; 106/19 Dec 49; 107/20 Feb 50; 108/27 Apr 50; 109/5 Jun 50; 110/10 Jul 50; 111/22 Aug 50; 112/23 Oct 50; 113/20 Nov 50; 114/15 Jan 51; 115/29 Mar 51.
7	2602 - 3003	5 Apr 51 - 10 Oct 54	116/30 Apr 51; 117/31 May 51; 118/21 Jun 51; 119/30 Jul 51; 120/15 Oct 51; 121/7 Jan 52; 122/14 Apr 52; 123/12 May 52; 124/23 Jun 52; 125/14 Jul 52; 126/20 Apr 53; 127/27 Apr 53; 128/4 May 53; 129/11 May 53; 130/18 May 53; 131/25 May 53; 132/1 Jun 53; 133/29 Mar 54; 134/26 Jul 54; 135/30 Aug 54; 136/22 Sep 54.
8	3004 - 3120	6 Oct 54 - 21 Jul 55	137/8 Oct 54; 138/18 Oct 54; 139/29 Nov 54; 140/10 Jan 55; 141/25 Jan 55; 142/21 Feb 55; 143/12 Apr 55; 144/2 May 55; 145/18 Jul 55.

Table A-1. (Continued)

UNCLASSIFIED VOLUMES

Vol	Pages Included	Dates Covered	Board Meetings (Number(s)) and Associated Date(s)
9	3121 - 3315	1 Aug 55 - 17 Sep 56	146/1 Aug 55; 147/22 Aug 55; 148/26 Sep 55; 149/17 Oct 55; 150/28 Nov 55; 151/15 Dec 55; 152/23 Jan 56; 153/12 Mar 56; 154/16 Apr 56; 155/21 May 56; 156/18 Jun 56; 157/16 Jul 56; 158/20 Aug 56.
10	3316 - 3457N	17 Sep 56 - 9 Jul 57	159/17 Sep 56; 160/15 Oct 56; 161/19 Nov 56; 162/22 Jan 57; 163/18 Feb 57; 164/25 Mar 57; 165/1 Apr 57; 166/22 Apr 57; 167/20 May 57; 168/4 Jun 57; 169/17 Jun 57.
11	3458 - 3580	15 Jul 57 - 27 Mar 58	170/15 Jul 57; 171/19 Aug 47; 172/16 Sep 57; 173/10 Oct 57; 174/21 Oct 57; 175/18 Nov 57; 176/16 Dec 57; 177/27 Jan 58; 178/24 Feb 58; 179/17 Mar 58.
12	3581 - 3991	4 Apr 58 - 6 Mar 59	180/21 Apr 58; 181/19 May 58; 182/12 Jun 58; 183/21 Jul 58; 184/27 Aug 58; 185/15 Sep 58; 186/20 Oct 58; 187/24 Nov 58; 188/19 Jan 59.
13	3992 - 4527	16 Feb 59 - 24 Mar 60	189/16 Feb 59; 190/13 Mar 59; 191/17 Apr 59; 192/18 May 59; 193/20 Jul 59; 194/17 Aug 59; 195/9 Sep 59; 196/19 Oct 59; 197/16 Nov 59; 198/18 Jan 60; 199/21 Mar 60; 200/25 Apr 60.
14	4528 - 5021	27 May 60 - 12 Jan 62	201/27 May 60; 202/15 Aug 60; 203/17 Oct 60; 204/19 Dec 60; 205/20 Feb 61; 206/15 May 61; 207/17 Jul 61; 208/18 Sep 61; 209/20 Nov 61.
15	5214 - 5470C*	17 Aug 61 - 10 Apr 62	210/19 Feb 62; 211/30 Mar 62; 212/4 Apr 62.

* Minutes of Third Explosive Safety Seminar filed separately - were pp 5022-5213.

Table A-1. (Continued)

UNCLASSIFIED VOLUMES

Vol	Pages Included	Date	Board Meetings (Number(s)) and Associated Date(s)
16	5471 - 6120	18 Apr 63 - 28 Jan 63	213/18 Apr 62; 214/30 Apr 62; 215/16 Jul 62; 216/24 Sep 62; 217/14 Nov 62.
17	6121 - 6526	23 Jan 63 - 28 Aug 63	218/23-24 Jan 63; 219/26 Mar 63; 220/28 May 63; 221/15 Jul 63.
18	6527 - 6920	30 Aug 63 - 12 Mar 64	222/3 Sep 63; 223/20 Nov 63; 224/7 Jan 64; 225/19 Feb 64.
19	6921 - 7370	2 Mar 64 - 28 Oct 64	226/20 Mar 64; 227/18 May 64; 228/7 Jul 64; 229/8 Sep 64.
20	7371 - 7866	11 Jun 64 - 26 Jul 65	230/4 Nov 64; 231/12 Jan 65; 232/3 Mar 65; 233/4 May 65; 234/15 Jun 65.
21	7867 - 8437.10	27 May 65 - 30 Mar 66	235/27 Jul 65; 236/7 Sep 65; 237/24 Nov 65; 238/8 Feb 66.
22	8348 - 8802	6 Jan 66 - 27 Sep 66	239/3 May 66; 240/12 Jul 66; 241/13 Sep 66.
23	8803 - 9276	10 Oct 66 - 27 Jun 67	242/24 Oct 66; 243/27 Nov 66; 244/12 Jan 67; 245/14 Mar 67; 246/16 May 67.
24	9277 - 9845	11 Jul 67 - 17 Jun 68	247/11 Jul 67; 248/28 Sep 67; 249/21 Nov 67; 250/20 Feb 68; 251/14 May 68.
25	9846 - 10255h	25 Jun 68 - 18 Feb 69	252/10 Sep 68; 253/10 Dec 68.
26	10256 - 10696a	18 Feb 69 - 1 Jul 69	254/11 Mar 69; 255/10 Jun 69.
27	10697 - 11180	30 Jun 69 - 23 Oct 69	256/7 Oct 69.
28	11181 - 11722	21 Oct 69 - 27 May 70	257/10 Mar 70.

Table A-1. (Continued)

UNCLASSIFIED VOLUMES

Vol	Pages Included	Dates Covered	Board Meetings (Number(s)) and Associated Date(s)
29	11723 - 12110b	24 Apr 70 - 29 Dec 70	258/16 Jun 70.
30	12112 - 12533	28 Sep 70 - 15 Apr 71	259/14 Oct 70; 260/14 Apr 71.
31	12534 - 12897	10 Feb 71 - 4 May 72	None.
32	12898 - 13282	14 Feb 72 - 14 May 73	261/24 Apr 72.
33	13283 - 14631	22 Jun 73 - 7 Nov 73	262/28 Jun 73; 263/21 Sep 73; 264/S-7 Nov 73.
34	14632 - 15019	8 Nov 73 - 20 Mar 74	265/8 Nov 73; 266/9 Nov 73.
35	15020 - 15457e	12 Feb 74 - 20 Dec 74	267/6, 14 Mar 74; 268/28 Jun 74.
36	15458 - 15849	11 Oct 74 - 2 Apr 75	269/18-24 Feb 75.
37	15850 - 16199	4 Apr 75 - 10 Oct 75	270/22 Apr 75; 271/21 May 75.
38	16200 - 16507	24 Jul 75 - 18 Dec 75	272/8 Oct 75; 273/9 Oct 75.
39	16508 - 16886	10 Nov 75 - 25 Nov 75	274/4, 6, 7, 17, 18 Nov 75.
40	16886 - 17330	6 Jan 76 - 19 Jul 76	275/18-19 Feb 76.
41*	17331 - 17623	10 Aug 76 - 28 Mar 77	276/10 Aug 76.

* Volume not yet complete. Numbers of each volume may change from time to time as pages of Minutes are incorporated into newer volumes for neatness sake (see text). However, number(s) shown for each page of data will remain the same.

Table A-1. (Continued)

CLASSIFIED VOLUMES

Volume Identification	Pages Included*	Dates Covered	Summary of Information in Volume**
Confidential	3796A - 17454	4 Aug 58 - 10 Aug 76	Volume concerns mostly chemical munitions; details noted in Appendix B (Table B-2).
Confidential; Restricted Data	3004 - 12541	14 Oct 54 - 14 Apr 71	Deals exclusively with nuclear weapon data. No information noted relevant to topic of report.
Secret	3522a - 17380	18 Feb 63 - 10 Aug 76	Deals with chemical and biological weapon data. No information noted related to main topics of this report.
Secret; Restricted Data	3049-1 - 17455	12 Apr 55 - 30 Aug 72	Deals primarily with nuclear weapon data. No data noted related to topic of report.

* Pages given in volume are intermittent; missing pages are in unclassified volumes of "Minutes of Meetings" of DDESB (see text).

** See Appendix B for details; also see text.

Table A-2. Highlights from Summary Notes of B.L. Knasel, DDESB*

Rough draft dated 15 March 1976 (this material is in front of Vol I)

Following procedures noted for Board Meetings: In accordance with the authority assigned the Chairman, DDESB, in Para VII of DOD Directive 5154.4, following procedures are noted for Board meetings:

a. At all times during a Board meeting, the Board members will be, in fact, DOD representatives and should not parochially represent their military departments. All efforts of the Board will be directed to obtaining the best information, solutions, and decisions for the DOD.

d. DOD Explosives Safety Standards are recommended under the authority of the Board and are legally binding as minimum safety standards when approved by the Secretary of Defense.

Volume I (7-10-26 to 7-20-56)

(18)** July 2, 1928: First meeting of the continuing joint Army-Navy Board was held this date...and decided that its mission included to keep advised of storages of ammunition and components thereof ...in order that steps...be taken to...preventing hazardous conditions from arising to endanger life and property within and without storage reservations.

(20) 8 Aug 28 - 17 Jul 34: Board held meetings "3 through #38"...and evaluated progress made by Army Ordnance Department and Naval Ordnance Department in carrying out recommendations of House Document No. 199.

(23) 11 Mar 43: Joint Board at 53rd Meeting on this date agreed on certain matters of Board policy, including:...Board of opinion that the American Table of Distances, upon which the present safety regulations are largely based, rested upon inadequate, and insufficient data and that tests immediately should be undertaken designed to develop a table of greater accuracy.

(24) 24 Mar 43: At 54th Meeting Board approved name change from "Joint Army and Navy Board on Ammunition Storage" to the "Joint Army Navy Ammunition Storage Board."

(28) 13 Sep 44: Circular #372, issued by order of the Secretary of War gave notice...of the jurisdiction of the Board to apply wherever explosives or ammunition are handled by the War or Navy Departments within the continental limits of the United States.

*Operations Division
**Numbers are B.L. Knasel's ordered number summary system.

Table A-2 (Continued)

(35) 2 May 45: Name of the Joint Army-Navy Ammunition Storage Board changed to Army-Navy Explosives Safety Board.

(50) 8 Jul 47: One memo from Army JAG to Director of Personnel and Administration, War Department,...concludes that no additional legislation is required to establish new safety standards.

(51) 27 Oct 47: By letter from the Attorney General to SecNav (27 Oct 49) the Attorney General stated...that Board in the execution of its statutory duty had the authority to establish safety standards and to make changes therein and that these standards have binding legal force as minimum safety standards.

(52) 18 May 48: Board's responsibilities regarding ammunition handling and shipping facilities in ports is shown in memo to ASA of 19 May 48.

(53) 16 Sep 48: Name of Board changed from Army-Navy Explosives Safety Board to Armed Services Explosives Safety Board. New charter became effective on 16 Sep 48.

(54) 1 Nov 48: Quantity-distance standards for mass detonating explosives and ammunition were proposed by memorandum to the Board members.

(60) 27 Apr 50: Board assumed task to survey and evaluate piers and wharves handling explosives and ammunition and the preparation of safety standards for piers and wharves.

(64) 21 Nov 53: DOD Directive 5154.4, 21 Nov 53 is a new charter under which Board was assigned to the Secretary of the Army Vice Chairman, Munitions Board. Board's jurisdiction was extended and applies wherever explosives are handled, transported, or stored by the Departments of the Army, Navy and Air Force.

(69) 11 Oct 55: Following many Board meetings concerning quantity-distance tables for mass-detonating explosives, the three services were unable to agree on the standards to be used. Chairman exercises his power of decision and submitted to the Board members a memorandum containing these decisions.

Volume II (11-26-56 to March 1976)

(75) 7 Dec 56: Quantity-distance standards for manufacturing, handling, and storage of mass-detonating explosives and ammunition were published as DOD Directive 4145.17, this date.

Table A-2 (Continued)

(80) 13 Mar 58: By memo to the Board members from the Chairman, ASESB, the "Decision of the Chairman" was made to apply a minimum factor of 50 for inhabited building distance tables to explosives in ships and barges and for amounts over 500,000 lbs that are not in ships or barges.

(83) 15 Oct 59: A Joint Army, Navy and Air Force Technical Bulletin (Army TB 700-2) was issued under the cognizance of the ASESB on "Explosives Hazard Classification Procedure." This bulletin assures uniform classification by the three Services.

(84) 23 Nov 59: DOD Directive 4145.18 (Quantity Distance Standards for Pier and Wharf Facilities Handling Explosives and Ammunition) issued over the signature of the Deputy Secretary of Defense.

(97) 30 Jul 62: By memo ASA (I&L) to ASD (I&L) recommended consideration of assigning the Board to DOD. By memo of 1 Oct 62, ASD (I&L) advised that the Charter of Board would be changed to assign the Board to ASD (I&L) and a change in Charter was made by memo ASD (I&L) on 25 Oct 62.

(98) 9 Oct 62: At 216th meeting, outline appears of Chairman of Board to effect that "...Board Members in this assignment are not, and were never intended to be, direct and inflexible mouthpieces of their respective services. A Board Member, under the Charter, has the responsibility for hearing and evaluating all data available from all sources (Service, industry, etc.) as it pertains to any controversy in which either a Board decision or guidance is required. The final decision, based on such data, may or may not coincide with the previously expressed opinions of a given Service. A Board Member must consider the broad aspects and implications of a problem as opposed to blindly accepting the possibly narrow views of a minority and/or uninformed group..."

(99) 25 Jul 63: DOD Directive 5154.4 was issued...and is a new Charter signed by Deputy SECDEF.

(101) 22 Oct 64: Resume of 229th Meeting of Board (8 Sep 64) reported a Board approved change to DOD Directive 4145.18, Pier and Wharf Standards. Change states: "These Standards are inapplicable to ammunition or explosives stored in ships' magazines and intended for the service of the shipboard armament or aircraft. They do, however, apply to the loading, off-loading, stowing or shifting of such ammunition or explosives."

(103) Jan 66: Safety Manual for Siting, Construction, and Equipping Pier and Wharf Facilities for Handling Explosives and Ammunition was published.

Table A-2 (Continued)

(105) 18 Aug 66: By memo, this date, Chairman ASESB sent copies of ASESB study report dated Jul 66 titled: "Barricade Effectiveness Evaluated from Records of Accidental Explosions."

(109) 10 Mar 69: DOD Inst 4147.27, DOD Ammunition and Explosives Safety Standards, was issued over signature of ASD (I&L) and this instruction provided for a single DOD manual, 4145.27M, which consolidated into one document all of the Board's Explosives Safety Standards.

(110) 16 Apr 69: On this date Dep SECDEF approved office request placing Chairman, ASESB in Department of Defense and assigned to the Office SECDEF.

(113) 4 May 71: Board unanimously adopted definitions for hazardous fragments. A memo from Chairman to the I&L's of the military departments explains the changes in standards required by these new definitions.

(114) 23 Oct 71: New charter for Board was signed this date by Deputy SECDEF in form of DOD Directive 5154.4.

(115) 24 Apr 72: 261st meeting of Board concurred unanimously in technical decisions which included: (b) fragmentation hazards for mass detonating ammunition.

(119) 18 Sep 73: US Navy requested the Board to consider exempting tenders from quantity-distance standards. Board reached a decision that quantity-distance would continue to be applied to destroyer and submarine tenders.

(122) 7 Mar 74: By memo for the General Counsel, OSD, this date, Chairman requested counsel's opinion on the confidentiality of the minutes of the DDESB formal minutes.

(123) Jul 74: The new DOD Ammunition and Explosives Safety Standards (DOD 5154.4S) was issued over the signature of DASD (I&H).

TABLE A-3. Data Extracted from Index to Meetings of DDESB*

TENDERS

Board Members & Chairman Memo for ASD(I&L), subj: Exemption from Application of Explosives Safety Quantity-Distance Standards, 7 Nov 73 (decision by Board as result of 264th meeting)	14,628**
DASD(I&L) Memo for SecNav, subj: Application of Explosives Safety Quantity Distances to Destroyer and Submarine Tenders, 1 Dec 73	14,630
Material used by Navy in giving presentation during Board Mtg #264	14,632
Material used by Board staff during 264th Meeting	14,676
For material previous to 1973 on Tenders see "Q-D Standards for Piers and Ships" and "Q-D Standards for Piers and Wharves"	
Board Meeting #264, 5 Nov 73, to discuss exemption from application of explosives safety quantity-distance standards	14,498
Chairman message to Army, Navy, AF announcing Board Meeting, 12 Oct 73	14,600
Chairman message to LY SPEAR AND PUGET SOUND, subj; Survey of Tender Munition Facilities and Operations NORVA, 18 Oct 73	14,602
CNO message dtd 28 Sep 73, subj: Exemption from Application of Explosives Safety Q-D Standards	14,605
ASD(I&L) Memo for Chairman, subj: Exemption from Application.. 18 Sep 73	14,612
SecNav Memo for SecDef, subj: Exemptions from application of explosives safety quantity-distance (ESQD) standards, 12 Sep 73	14,613
ASD(I&L) memo for SecNav, same subject, 18 Sep 73	14,621
DDESB memo for CNO, same subject, 25 Sep 73	14,622
Chairman memo for Mr. Sheridan, same subject, 4 Oct 73	14,625
Mr. Sheridan memo for Mr. Mendolia, same subject, 5 Oct 73	14,627

*Maintained by Secretary to Chairman, DDESB (see text).
**Numbers relate to pages in sequentially numbered volumes "Minutes of Meetings of DDESB."

Table A-3 (Continued)

TORPEDOES

CNO LTR TO DDESB, subj: Explosives Safety Handling Arc for Torpedo Evolutions, 29 Sep 76 17,526

Ltr to CNO, subj: Explosives Safety Quantity-Distance Requirements for Torpedoes, 28 Oct 76 17,527

Table A-4. Summary of Materials Reproduced from "Minutes of Meetings" of DDESB*

Repro Number**	Vol and Pages***	Comments/Summary of Materials Reproduced
1	9, pp. 3148-57	Memorandum for Board Members from Chairman, ASESB, of 11 Oct 55. Subject: "Decision of the Chairman in Which Board Members are Not in Unanimous Agreement With Reference to Inhabited Building Quantity-Distance Tables for Mass-Detonating Explosives"
2	9, pp. 3190-1	Memorandum for Record from Chairman, ASESB, of 12 Dec 55. Same as Repro #1
3	21, pp. 8043a-b	Memorandum from Army Member to Chairman, ASESB, of 10 Aug 65. Subject: Proposed Revision to Section IV, Inclosure 1, DOD Directive 4145.17
4	21, pp. 8044-5	Memorandum from Chairman to Members, ASESB, of 7 Sept 65. Subject: Proper Application of Paragraph V B DOD Directive 4145.17, (Incl 1) December 7, 1956
5	22, pp. 8407-9	Memorandum from Chairman, ASESB, to Commander, US Naval Weapons Laboratory, Dahlgren, Va. of 22 Mar 66. Subject: Development of Safety Criteria Applicable to Fragment Producing Explosives
6	29, pp. 11,894-6	Memorandum for the ASESB from Chairman, of 11 June 70. Subject: Meeting # 228 of the ASESB.
7	31, pp. 12,534-40	Letter to ASESB from Department of the Air Force, HQ USAF, IGDSGE (Deputy Inspector General for Inspection and Safety, USAF, Norton Air Force Base, Calif. 92409) of 10 Feb 71. Subject: proposed Interim Change 1-5 to DOD Manual 4145.27M
8	31, pp. 12,541-5	Definitions, rationales, and recommendations regarding Interim Change 1-5 taken from Meeting #260 of ASESB of 15 Apr 71.

*These materials are shown in Appendix D (see text).
**Sequence number for bookkeeping purposes of this report.
***Volume and page in "Minutes of Meetings" of DDESB.

Table A-4 (Continued)

Repro Number	Vol and Pages	Comments/Summary of Materials Reproduced
9	31, pp. 12,602-3	Memorandum For Members from Chairman, ASESB, of 4 May 71. Subject: Protection from Fragments and Debris Resulting From Explosions
10	35, pp. 15,223-9	DDESB Memorandum labeled DDESB/BLK/bjm of 20 May 74. Subject: Information on DDESB TDY Funding
11	41, pp. 17,522-3	Memorandum for Secretaries of the Army, Navy, AF from Frank A. Shrontz (ASD-I&L). Draft of 30 Sep 76. Subject: Authority to Waive Explosives Safety Standards.
12	41, p. 17, 525	Memorandum for Members, DDESB, from Chairman of 13 Oct 76. Subject: Standardized Hazard Classification Information
13	41, p. 17, 526	Letter From Chief of Naval Operations to Chairman, DDESB, of 29 Sep 76. Subject: Explosives Safety Handling Arc for Torpedo Evolutions
14	41, p. 17, 527	Letter from Chairman, DDESB, to Chief of Naval Operations (OP-04) of 28 Oct 76. Subject: Explosives Safety Quantity-Distance Requirements for Torpedoes

Table A-5. Technical Papers Published by the DDESB

Number	Title and Identifying Information
TP-1	The Present Status of the American Table of Distances. AD 223339. 1 July 1945.
TP-2	The Missile Hazard from Explosions. AD 223340. 1 Dec 45
TP-3	Igloo Tests, Naval Proving Ground, Arco, Idaho, 1945. AD 223341. Revised 6 Nov 47.
TP-4	Scale Model Igloo Magazine Tests, Naval Proving Ground, Arco, Idaho. AD 223342. Aug, 1946.
TP-5	Igloo and Revetment Tests, Naval Proving Ground, Arco, Idaho. AD 223343. Oct 1946.
TP-6	The Port Chicago, California Ship Explosion of 17 July 1944. AD 223344. 1 Mar 1948.
TP-7	R. Ilsley, Glass and Plaster Damage From Small Explosions, Armed Services Explosives Safety Board, Washington, D.C., 49 pp, AD 637 835. 15 Mar 50.
TP-8	Theoretical Considerations and Quantity-Distance Separations Recommended for Protection of Hazards from an Underground Explosion, AD 287931. 1 May 1959.
TP-9	Siting Facilities For The Storage of Explosives/Petroleum, Oil, Lubricant Products, Armed Services Explosives Safety Board, Washington, D.C. AD 854 748L. 10 April 1969.
UNPUB	R. Ilsley, Reappraisal of the American Table of Distances and Recommended Bases for Discussion, Modification, and Final Approval of Minimum Risk Distances for Handling and Storing Military Explosives and Ammunition. 1 July 1948.
TP-10	M.C. Johnson, Methodology for Chemical Hazard Prediction, Department of Defense Explosives Safety Board. AD 008 159. Oct 1974.
TP-11	Computer Program for Predicting Casualties and Damage from Accidental Explosions. AD A012 847. May 1975.
TP-12	Fragment and Debris Hazards. Department of Defense Explosives Safety Board, Washington, D.C. AD A013 634. July 1975.

Table A-6. Seminars Held by the Department of Defense Explosives Safety Board

Number	Title and Identifying Information
1	Minutes of the Explosives Safety Seminar on High-Energy Solid Propellants held at the Naval Propellant Plant, Indian Head, Maryland on 10-11 June 1959. Armed Services Explosives Safety Board, Washington 25, D.C. AD 335 188. June 1959.
2	Minutes of the Second Explosives Safety Seminar on High-Energy Solid Propellants held at the Redstone Arsenal, Huntsville, Alabama on 12-14 July 1960. Armed Services Explosives Safety Board, Washington 25, D.C. AD 332 709. July 1960.
3	Minutes of the Third Explosives Safety Seminar on High-Energy Solid Propellants held at the Mission Inn, Riverside, Calif. on 8-10 August 1961. AD 332 711. Aug 1961.
4	Minutes of the Fourth Explosives Safety Seminar on High-Energy Solid Propellants held at the Langley Research Center, Langley, Virginia on 7, 8, 9 August 1962. AD 332 710. Aug 1962.
5	Minutes of the Fifth Explosives Safety Seminar on High-Energy Solid Propellants held at the Miramar Hotel, Santa Monica, Calif. on 20, 21, 22 August 1963. AD 346 196. Aug 1963.
6	Minutes of the Sixth Explosives Safety Seminar held at Barksdale Air Force Base, Shreveport, La. AD 456999. Aug 1964.
7	Minutes of the Seventh Explosives Safety Seminar held at Cocoa Beach, Florida. AD 368 108. Aug 1965.
8	Minutes of the Eighth Explosives Safety Seminar held at Marshall Space Flight Center, Huntsville, Ala. AD 801 103. Aug 1966.
9	Minutes of the Ninth Explosives Safety Seminar, Naval Training Center, San Diego, Calif. 15-17 Aug 1967, Armed Services Explosives Safety Board, Washington, D.C. 20315. AD 824 044. Aug 1967.
10	Minutes of the Tenth Explosives Safety Seminar, Louisville, Ky. 13-15 August 1967. Vol I, AD 846 612. Vol II. AD 394 775L. (Vol II, CONFIDENTIAL). Aug 1968.
11	Minutes of the Eleventh Explosives Safety Seminar, Memphis, Tenn. 9-10 Sep 1969. Vol I AD 862 868L. Vol II. AD 861 893L (Vol II is FOUO). Sept 1969.
12	Minutes of the Twelfth Explosives Safety Seminar Held at the Sheraton-Peabody Hotel, Memphis, Tenn. 25-27 Aug 1970. AD 716 790. Aug 1970.

Table A-6. (Continued)

Number	Title and Identifying Information
13	Minutes of the Thirteenth Explosives Safety Seminar. San Diego, Calif. AD 890 544L. Armed Services Explosives Safety Board. Washington, D. C. 20315. Sep 1971.
14	Minutes of the Fourteenth Explosives Safety Seminar. New Orleans, La. AD 758 990. Nov. 1972
15	Minutes of the Fifteenth Explosives Safety Seminar held at the Hyatt Regency Hotel, San Francisco, Calif. 18-20 Sep 1973, Department of Defense Explosives Safety Board, Washington, D.C. 20314, Vol I AD 775 580. Vol II. AD 775 660. Sep 1973.
16	Minutes of the Sixteenth Explosives Safety Seminar Held at Hollywood, Florida. Vol I. AD A007 557. Vol II. AD A007 566. Sep 1974.
17	Minutes of the Seventeenth Explosives Safety Seminar Held at the Regency Inn, Denver, Colorado, 14-16 Sept 1974. Two Volumes (No AD assignations as yet). Sept 1976.

THIS PAGE INTENTIONALLY LEFT BLANK.

APPENDIX B

DETAILED SUMMARY OF DATA STUDIED IN THE DDESB HISTORICAL VOLUMES ("MINUTES OF MEETINGS")

The 41 volumes containing well over 20,000 pages of text and comprising the unclassified volumes of the DDESB historical volumes were studied to determine the events associated in any way with the origin and subsequent modification of the ESQD rules. These volumes, commonly referred to as "Minutes of Meetings" of the DDESB, contain deliberations of Board meetings, summaries of many meetings, background information, voluminous correspondence, formal documents (including early draft versions), etc. Any such documents noted that seemed to be in some way related to the subject topic were summarized (frequently abstracted or paraphrased) and included in Table B-1 along with appropriate reference data and document identification. Corresponding summary data also appear for the four volumes containing classified data (including restricted data) on the subject topic. These latter data (summarized so as to be unclassified) are noted in Table B-2. Especially significant summary or explanatory materials noted were indicated by an asterisk in the leftmost column, given a sequential "REPRO" (reproduction) number and duplicated in full (with DDESB approval and assistance) in Appendix D. Additional details relating to this extremely comprehensive study of the historical volumes of the DDESB are given below.

In studying and summarizing the relevant data in the 41 historical volumes noted above, the most recent volumes were studied first (and more thoroughly). In general, more notes were taken rather than less so as to generate as complete a summary as possible. Information relating to DDESB accident investigations were noted primarily to indicate certain conflicts that have arisen over the years between the uniformed Services and the Board relating to ESQD standards. This was also done to illustrate the long-standing nature of these difficulties. This was especially true in cases where the Service had built-up facilities in populous areas (often for an older Service, Army or Navy), usually when a town grew close to or around a military installation.

It should be noted that the "verbatim transcripts" of the DDESB occasionally will have lapses and/or omitted material. This occurred when (1) the tape record used in recent years failed to operate properly or (2) portions of Board meetings were held "off the record."

A document in the DDESB historical record may be referred to several times. This might occur if work was being done on various draft versions, if it was included in a year-end summary submitted to the Deputy, Assistant Secretary of Defense (Installations and Housing (DASD (I+H)), or because resolution of a certain issue was difficult to obtain and the subject had to be raised more than once. Such redundancy is reflected in Tables B-1 and B-2 and is an accurate indication of the underlying historical files of the DDESB.

One should be careful in studying the 41 historical volumes of the DDESB (as was the author, in his summary shown as Tables B-1 and B-2) not to try and prove a preconceived case by drawing upon out-of-context statements made in the verbatim transcripts of Board meetings. Such meetings, on occasion, may involve quite heated discussion; further, some individuals may be in conflict with one another and speaking only to their own momentary self-interest or relative to their individual experience. While verbatim transcripts are invaluable in filling in the background related to a given topic, the final Board actions are of more lasting value for this study.

Occasionally, items noted in the Board deliberations were followed over time, less because of their relevance to the subject topic and more because of the light they shed (1) into the way Board meetings were held, (2) concerning procedures adopted relating to changes in Board regulations, (3) into interactions between Board members with each other as well as their reaction to special Service problems, or (4) for some special reason that seemed at least tangentially related to the subject topic.

Table B-1. Data Related to Explosives Safety Quantity-Distance Rules Extracted From Unclassified DDESB Official Historical Volumes*

Reference** Vol/Pp/Date	Document Identification	Fact/Datum (usually abstracted and/or paraphrased)
1 1-45 Sep 24 to May 41	Meeting of Joint Army and Navy Powder Specification Board***	No relevant information noted.
1 new page 1-new page 337 Dec 27 - Dec 40	Meetings #1-#50 Joint Army-Navy Board on Ammunition Storage	Joint Army-Navy Board first convened...July 2, 1928, in compliance with appropriate provision in Act of Congress approved 29 May 28 (Second Deficiency Act, fiscal year 1928). Significant items of first 50 meetings follow.

* These volumes are generally referred to by DDESB personnel as the "Minutes of Meetings" of the Board. However, they contain much information in addition to resumes and verbatim transcripts of formal Board meetings (see text and explanatory data at beginning of this appendix). In addition to these unclassified documents, volumes also exist in which classified matters related to the DDESB are discussed. See text and Table B-2 as well as first footnote on page .

** "Vol" refers to the volume number of the "Minutes of Meetings" (see footnote, above) of the DDESB. "Pp" refers to the page number(s) in the volume cited. "Date" refers to the date noted on each cited document.

*** The current DDESB has had several different names (as well as varying tasks) since its inception in 1928. The identifying letters shown in this table are those appropriate to each time period.

Table B-1 (continued)

Reference Vol/Pp/Date	Document Identification	Fact/Datum (usually abstracted and/or paraphrased)
1 317-318 13 Aug 40	Minutes of Meeting #48, Joint Army Navy Board On Ammunition Storage	Items #3 and #4 mentioned the large increase in ammunition storage required for both Army and Navy in current expansion program...and general policies were established and decisions drawn. These are noted and include: The American Table of Distances will apply insofar as protection of nearby communities and outside habitations from ammunition explosions and fires is concerned...and also the phrase "similar hazardous material" applies to bombs, and includes depth charges, mines, and other explosives subject to mass detonation.
1 329-330 27 May 41	Minutes of Meeting #50, Joint Army Navy Board on Ammunition Storage	Item #3 related to the storage of powder, high explosives, and ammunition...and following policies and practices are approved, based on military necessity and requirements of current unlimited emergency...remove some restrictions relating to the storage of high explosives and bombs, as imposed by House Document 199.
1 new page 1 6 Feb 41	Notes to Brig. Gen., Ordnance Dept., U.S.A.	Loose note attached to this page (seems stapled out of chronological order) is of interest. States that (1) maximum H.E. permitted in pile of projectiles is 15,000 lbs and not more than 143,000 in a magazine; (2) missile hazard distances are not reduced by barricading; (3) missile hazard distance is 12,000 ft for explosive D (loaded and 1,800 ft for TNT loaded); other similar rules.
2 370-1 24 Mar 43	Minutes of Meeting #54 JANASB	Item #8 states that the Board tentatively adopted the Ordnance Safety Manual (O.O. Form 7224) and TM9-1900 (Ammunition General) as standards and directed that they be submitted to the Navy Department for consideration by BuOrd. Item #9 states that a memo dated 24 Mar 43 was presented to the Board. Memo lists 11 Navy projects, each of which is deficient in certain respects in safety distance requirements.

Table B-1 (continued)

Reference Vol/Pp/Date	Document Identification	Fact/Datum (usually abstracted and/or paraphrased)
2 374-5 22 Mar 43	Ltr to Sec of War and Sec Nav from JANASB	Para. #5 states that...Board was further of opinion that the American Table of Distances, upon which present safety regulations are largely based, rested upon inadequate, insufficient data and that tests immediately should be undertaken to develop a table of greater accuracy.
2 399 30 Jun 43	Meeting of Joint Army Navy Board (informal)	Purpose of this meeting was to draw up a testing program to determine whether or not the present quantity-distance requirements for igloo magazines may be reduced.
2 417-24 15 Sep 43	Minutes of Meeting #57 of JANASB	Item #13 stated that with regard to proposed plans for testing to determine minimum distances at which concrete igloo magazines containing explosives may be safely spaced, Navy would participate...in technical preparation.
2 486-8 26 Jan 44	Minutes of Meeting #58 of JANASB	Items #3-5 (and most of meeting) concerned with letter to it, from Office of Solicitor, U.S. Department of the Interior, dealing with proposed legislation entitled "Explosives Safety Act." In item #5, Board conclusions regarding this legislation (proposed) included: that quantity-distance requirements...as are incorporated in the proposed legislation are the same as those recommended...in House Document #199, 70th Congress, and (2)...matters are highly controversial and existing actual experience and experimental data available are not sufficiently conclusive to warrant condemning or upholding the position taken by either disputing agency...

Table B-1 (continued)

Reference Vol/Pp/Date	Document Identification	Fact/Datum (usually abstracted and/or paraphrased)
2 489-519 6 Jan to 21 Mar 44	Correspondence between Dept of Interior, JANASB, Army Service Forces, etc.	These correspondence include Tabs 1,2,2(a),2(b), and 3 to Minutes of JANASB Meeting #58 of 26 Jan 44 and relate to the above-mentioned proposed legislation. Mostly the correspondence relates to the formation of a board to make recommendations regarding quantity and distance requirements for storage of smokeless powders and related propellants.
3 771-8 22 Jul 44	Tab 3 to Meeting #64 of JANASB	This memorandum relates to ammunition shipping facilities at the ports of Boston, Philadelphia, Baltimore, Hampton Roads and Charleston and is one of the earliest references noted relating to hazardous conditions existing at these places during the process of ammunition return following World War II. Para. #1 cites memo to Board from Asst COS dtd 3 Jul 44 which required recommendations and specified analyses of hazards at port ammunition shipping facilities.
3 786 7 Aug 44	Minutes of JANASB Meeting #65	Item #4 noted the suggestions that the Board make a study looking toward the construction of separate barricaded berths for the loading of ammunition ships at piers. Purpose, in this case, would be to prevent propagation of an explosion from one ship to another.
3 824-6 22 Aug 44	Minutes of JANASB Meeting #66	Item #2 related to extension of cognizance of the Board to apply wherever explosives are handled by the War or Navy Depts. Item #5 made reference to...opinion of Attorney General concerning the scope of the Board. Item #8 indicated Board's approval of 25 Jul 44 letter to the Secretary of War relating to quantity-distance standards for Joint Army Navy Ammunition Storage Board. Was recommended in this letter that Board be authorized to send its representatives overseas for purpose of procuring...necessary information. (see following references)

Table B-1 (continued)

Reference Vol/Pp/Date	Document Identification	Fact/Datum (usually abstracted and/or paraphrased)
3 841-2 15 Aug 44	Letter from Pres. JANASB to Sec of War and Sec Nav	Letter makes reference to careful consideration of Board during... recent months to hazards involved in handling and loading ammunition and explosives aboard ships...Mentions (para. #3) that seems imperative that a comprehensive plan should be drawn up at once for the replacement of existing hazardous facilities. Para. #5 says that Board has accumulated and is prepared to furnish data...of value in preparing this plan.
3 843-4 25 Jul 44	Ltr to Sec War from Pres. JANASB	Letter is Tab 9 to Minutes of JANASB Meeting #66 and relates to quantity-distance standards for JANASB. Recommends that Board be authorized to send representatives overseas...for purpose of procuring information needed for...preparing updated quantity-distance standards.
3 845 7 Aug 44	Ltr from Sec War to JANASB	Letter replies to item directly above and approves requested authorization (with conditions) for purpose of procuring information for preparation of quantity-distance standards for Board's proper functioning.
3 947-9 10 Oct 44	Ltr from JANASB to Sec War & Sec Navy	Letter related to Board's past contemplation...of a series of demolition tests to prove and extend the available data on quantity-distance relations for storing explosives and ammunition at Army and Navy establishments. Recommends that War Department provide funds for use by JANASB to conduct test outlined in letter.

Table B-1 (continued)

Reference Vol/Pp/Date	Document Identification	Fact/Datum (usually abstracted and/or paraphrased)
3 950-4 6 Oct 44	Memo for JANASB	Memo is Tab #2 to Minutes of JANASB Meeting #69 and related to port facilities for handling and loading ammunition and explosives. Memo submits...proposed arrangements of barricaded piers and quay walls for cargoes containing high explosives. Para. #4 refers to Port Chicago explosion. Para. #5 relates to the substantial barrier it is felt will be needed to protect a ship against underwater effects. Para. #6 relates to protection for the portion of the ship above the elevation of the deck of the wharf from low-flying missiles (sand-filled barricades suggested).
3 955-7 18 Oct 44	Minutes of JANASB Meeting #70	Item #8 noted that drawing prepared under consideration of Meeting #69 were discussed but no final action was taken in the matter.
3 968-70 12 Nov 44	Minutes of Meeting #73 JANASB	Item #10 states that a memo was received from G-4, War Department General Staff, indicacing that requested funds had been made available... for conducting demolition tests. See below.
3 1003 27 Oct 44	Memo for JANASB from War Dept, G-4	Memo relates to demolition tests and states that recommendations in para. 2 of JANASB's letter of 10 Oct 44 (requesting demolition tests) are approved subject to corresponding approval by Secretary of Navy.
3 1020-8 2 Jan 45	Minutes of Meeting #74 JANASB	Item #11 relates to port facilities for handling and loading ammunition and explosives. Item indicates reply of G-4 and states that Commanding General, Army Service Forces was reviewing facilities for loading and handling ammunition, Navy Department had been contacted, and...an appropriate board had been formed and was considering a plan for permanent facilities deemed necessary. Item #12 indicated four items of correspondence concerning demolition tests recorded by the Board. Main item related to Navy's approval...for tests and making certain observations related thereto. Details of these items follow.

Table B-1 (continued)

Reference Vol/Pp/Date	Document Identification	Fact/Datum (usually abstracted and/or paraphrased)
3 1046-50 6 Oct 44	Memo for JANASB Dept of Navy	This item is Tab 3(c) to Minutes of Meeting #74 JANASB and relates to port facilities for handling and loading ammunition and explosives. With letter are submitted sketches showing proposed arrangements of barricaded piers and quay walls for cargoing high explosives. Para. #3 indicates that in each case purpose is by means of barricades to protect vessels from detonation by blast and missiles from an explosion which may take place on another ship or on railroad cars.
3 1070 15 Aug 44	Letter to Sec War and Sec Navy from JANASB	Letter is Tab 9(a) of Minutes of Meeting #74 of JANASB. Recommends in Para. #4 that immediate consideration be given to hazards involved in handling and loading ammunition and explosives aboard ships and the location of sites and kinds of facilities required for the accomplishment of this mission with maximum safety to surrounding facilities and populations and maximum protection against loss or destruction of ship loading facilities...
3 1074-1079 23 Nov to 11 Dec 44	Correspondence between Sec War, Sec Navy, JANASB, Chief of Ordnance	These several correspondences constitute Tabs 10, 10(a), 10(b), 10(c) of Minutes of Meeting #74 of JANASB. All relate to demolition tests proposed in Joint JANASB memo of 10 Oct 44. Main item mentioned on p. 1074 is that the Navy Department favors the accomplishment of such tests at an early date. Particular interest of Navy spelled out in detail.
4 1105-8 15 Jan 45	Minutes of Joint Army Navy Ammunition Storage Board #75	Item #10 related to safety regulations for handling and storing ammunition at Army and Navy establishments. These were read for the record and approved by the Board. Letter of 12 Jan 45 sent to the Secretaries. (see following reference)

Table B-1 (continued)

Reference Vol/Pp/Date	Document Identification	Fact/Datum (usually abstracted and/or paraphrased)
4 1121-2 12 Jan 45	Ltr to Secretary of War and Secretary of Navy from Board President	Letter referred to above and is Tab #8 relating to safety regulations for handling and storing ammunition at Army and Navy Establishments. Para. #3 seems of greatest interest and states that to accomplish its mission, Board has adopted minimum explosives safety standards for the handling and storage of ammunition and explosives. Mentions that standards are in substantial agreement with those used by the operating agencies, but revised and changed based on new data from accidental and research efforts.
4 1139-48 3 Mar 45	Minutes of JANASB Meeting #76	Item #4 related to the safe spacing of ships containing ammunition and explosives as function of type ships and distance from shore establishments. Item #10 related to safety regulations for handling and storing ammunition at Army and Navy Establishments. Referred to Para. 10, Meeting #75, which recommended that all operating agencies of the War and Navy Departments...send copies of ammunition handling regulations to Board.
4 1150-75 20 Jan 45	Tab #1 to Minutes of Meeting #76	Report deals with handling and loading ammunition and explosives reports published by Joint Army-Navy Board on Port Facilities. Sent to Secretaries of War and Navy. Lists recommendations (p. 1154) relating both to existing construction and also new construction piers designed to minimize ammunition handling and storage hazards.
4 1191-3 2 Jan 45	Ltr from COM12TH FLEET, Intelligence Report	Letter related to Great Britain and U.S. Navy storage of ammunition and deals with the distance at which ships loaded with ammunition should be berthed.
4 1272-4 26 Apr 45	Minutes of JANASB Meeting #80	Item #10 related to igloo test committee and modification of proposed layout of tests to conform to standard Navy distances Approved layout and other matters concerning test. See following reference.

Table B-1 (continued)

Reference Vol/Pp/Date	Document Identification	Fact/Datum (usually abstracted and/or paraphrased)
4 1336 27 Mar 45	Minutes of Igloo Test Committee (Tab #13, above minutes)	Summarizes meeting of above-named committee. Considered proposed layout for igloo tests and approved it. Committee considered stacking plans for tests igloos...and approved plans as indicated in inclosure. Subject of instruments delayed to a future meeting.
4 1338-41 23 May 45	Minutes of Joint ANESB Meeting #81	Item #13 stated that it was directed that explosives safety standards for mixed storage and ammunition and explosives at posts, camps and stations (Class I,II,III) be forwarded to each member for study and review.
4 1402-4 9 Mar 45	Standards from President, ANESB	These pages contain tentative standards for explosives safety at magazine area car loading and unloading platforms and pads for handling explosives and ammunition. Mentions that present safety standards... are incomplete. No published restrictions are placed upon the quantity of explosives and ammunition which may be concentrated...Para. #3 states that pending revision of present explosives safety standards...following tentative explosives safety standards have been adopted (lists these standards). Para. #4 states that standards for 250 gross tons are based on Ordnance Safety Manual regulations whereas those for 500 gross tons are based on laws of State of New Jersey and ATD.
4 1411-3 8 Jun 45	Minutes of ANESB Meeting #82	Items #11 and #12 related to approved standards for magazines associated with runways and close to gasoline storage, resp. Item #13 schedules date for igloo test at Arco, Idaho.

Table B-1 (continued)

Reference Vol/Pp/Date	Document Identification	Fact/Datum (usually abstracted and/or paraphrased)
4 1441-4 5 May 45	Ltr to Hq, Army Air Forces from Board Army Member	These pages constitute Tabs #7 and #8 to Minutes of 82nd Meeting of ANESB. Pages present tentative standards for the separation of gasoline storage facilities from explosives and ammunition storage facilities, (Tab #8) and also relate to plans for construction of new permanent ammunition handling and storage facilities...which in some cases meet standards of Board and in others do not. Rules applicable are stated.
4 1456-61 14 Jun 45	Ltr to ANESB from USA Ord Dept	Letter relates to explosives safety standards for the mixed storage of ammunition and explosives at posts, camps and stations (Classes 1, 2, and 3 installations). Mentions that standards are submitted for approval...and have been prepared after study of Army regulations, ordnance rules, British regulations, reports of explosions on file with Board and reports of Board inspection of subject type of installations. Letter is Tab #5 of Minutes of Meeting #83 whereas standards themselves are given as Tab #6, same Minutes.
4 1465-6 7 Aug 45	Minutes of ANESB Meeting #84	Item #3 related to Board decision that in the case of ammunition pier facilities that standard marginal pier should have both ends connected to shore, thereby providing two paths of escape in the event of fires or explosions on piers. Item #4 related to a verbal report to the Board concerning the status of the igloo test program at Arco, Idaho. Details listed.
4 1473-6 20 Nov 45	Minutes of ANESB Meeting #85	Item #2(e) related to reactions of War and Navy Departments to changes in the present standards for ammunition transfer and car loading platforms. Further study needed. Item #2(j) dealt with the igloo tests at Arco, Idaho. Item #2(w) was a report that the Board had issued Technical Paper No. 1 dealing with the American Table of Distance and that the report had received favorable comment.

Table B-1 (continued)

Reference Vol/Pp/Date	Document Identification	Fact/Datum (usually abstracted and/or paraphrased)
4 1504-5 30 Oct 45	Memo for ANESB from BuOrd	Memo relates to explosives safety standards for carloading and unloading platforms and sheds for handling explosives and ammunition (Bureau of Ordnance Transfer Depots). Mentions that draft of subject memorandum was reviewed and conforms to established BuOrd procedure except for 10 notations. Comment made regarding areas of non-agreement.
4 1522-3 no date listed	Part of Tab #10, Minutes of ANESB Meeting #85	Memorandum relates to explosives safety regulations for outdoor storage of military explosives and ammunition at United States Army Posts, Camps and Stations in the Continental United States. Mentions that these regulations supplement those set forth in TM 9-1900...and are applicable to the outdoor storage of ammunition as specified in document. Para. #2 relates to applicable quantity-distance regulations; para. #2(d) specifies that a minimum distance shall be maintained between adjacent stacks of...ammunition and that this shall be 800 ft.
4 1528-31 17 Jul 45	Memo for ANESB from Ordnance Dept., USA	Memo is Tab #13 of Minutes of Meeting #85 of ANESB. Relates to approval of regulations for the emergency outdoor storage of military explosives and ammunition at Army Ordnance installations in Continental United States. Rules and regulation stated and limitations state that these regulations are approved...for temporary and emergency use until approved magazines located in accordance with the standard Army and Navy quantity-distance regulations can be provided.

Table B-1 (continued)

Reference Vol/Pp/Date	Document Identification	Fact/Datum (usually abstracted and/or paraphrased)
5 1626-7 19 Feb 46	Minutes of 88th Meeting of ANESB	Item #2 indicated that this was a special meeting called to consider a new proposed test program in continuation of the igloo and inhabited building tests conducted by the Board during 1945 at the Naval Proving Ground, Arco, Idaho. Details of the proposed tests are listed. Item 2(c) stated that Board was considerably interested in glass breakage phase of...tests. Item 2(d) stated that Board agreed to new program as outlined...but that program (might be) altered to...reduce blast effect and glass breakage...using heavy earth covering.
5 1628-31 no date listed	Test Program - 1946	Lists detail of explosives safety tests of igloos and inhabited buildings. Relates primarily to Arco tests referred to directly above.
5 1684-1713 25 Jul 46	Tab "A" to Minutes of Meeting #91 of ANESB	Detailed notes and plans relating to Igloo Magazine Test Program, 1946, at Naval Proving Ground, Arco, Idaho.
5 1766-70 17 Mar 47	Minutes of Meeting #94, ANESB	Item #2 indicated that this was a special meeting called to discuss a draft of suggested memorandum to Secretaries of War and Navy recommending...changes in Army and Navy standards of safety for storage of explosives and ammunition based upon results of 1945-6 Arco, Idaho igloo tests. Item #4 related to comments made regarding British Explosives and Transport Committee. Speaker thought Board might want to make use of scale noted in report. Item #7 made point that new quantity-distance table could be interpreted...as reducing inhabited building distance from 1800 to 1200 ft. Many more details presented relating to changes in quantity-distance rules. See following reference.

Table B-1 (continued)

Reference Vol/Pp/Date	Document Identification	Fact/Datum (usually abstracted and/or paraphrased)
5 1771-77 Mar 47	Draft Memo for Sec of War and Sec of Navy from President, ANESB	Memo deals with recommended changes in Army and Navy Safety Standards for Storage of Explosives and Ammunition. States background of recommended changes, mentions 1945 and 1946 Board planned and supervised tests, and lists conclusions drawn therefrom. Relates to storage in igloos. P. 1777 lists quantity-distance table suggested, which shows a missile hazard of 1200 ft for minimum distance from nearest inhabited building, public railway, and public highway for all explosive quantities shown.
5 1778-80 27 Dec 46	Ltr to Chief of Ordnance from President, ANESB	Letter refers to results of explosives safety tests and lists recommendations (tentative) for restorage operations pending formal publication of the results of tests and approval by the Secretaries of War and Navy Departments. Para. 4(b) indicates that, compared to the American Table of Distance, the recommended distances represent a decrease in the unbarricaded and an increase in the barricaded distances for any given quantity of explosives.
5 1838-44 11 Apr 47	Memo for Sec of War and Sec Nav from President, ANESB	Memo is formal letter transmitting recommended changes in Army and Navy Safety Standards for the Storage of Explosives and Ammunition. This is practically identical to draft memo (two items above).
5 1847-9 11 Jun 47	Minutes of 96th Meeting of ANESB	Item #4 relates to recommended changes in safety standards for storage of explosives and ammunition, 11 Apr 47. Refers to letter (p. 1855) to Chief of Ordnance from Board Member to limit amount of explosives in certain specified storage magazines.

Table B-1 (continued)

Reference Vol/Pp/Date	Document Identification	Fact/Datum (usually abstracted and/or paraphrased)
5 1857-60 8 Oct 47	Minutes of 97th Meeting of ANESB	Item #10 related to recommended changes in Army and Navy safety standards for the storage of explosives and ammunition. Mentions memorandum (see directly below) setting forth opinion of Judge Advocate General that no additional Congressional legislation is required to permit adoption of new safety standards not in conformity with the laws of the State of New Jersey for the storage of ammunition and components thereof.
5 1915-20 13 Jun 47	Memo for Judge Advocate General (from staff)	Memo lists the reasons for conclusions that no additional legislative authority is required to enable the War and Navy Departments to adopt new safety standards not in conformity with the laws of the State of New Jersey for the storage of ammunition and components. Recommends that representative of JAG office meet with Navy Department representative and informally advice him of views expressed above.
5 1946-9 13 Jan 48	Minutes of 98th Meeting of ANESB	Item #3 indicated that major purpose of meeting was to determine in what manner Board could assist Dept of the Interior in formulation of a uniform state law for explosives. Lists documents distributed to attendees, tests conducted during war (II), and current status of regulations. Details presented on p. 1947.

Table B-1 (continued)

Reference Vol/Pp/Date	Document Identification	Fact/Datum (usually abstracted and/or paraphrased)
5 1958-62 15 Jan 48	Incl #3 to Minutes of 98th Meeting of ANESB	Second part of this tab is report of Army-Navy Explosives Safety Board for calendar year 1947. On p. 1959 indicates four meetings during year, including 14 Mar 47 one which recommended changes in Army and Navy quantity-distance relations for the storage of explosives and ammunition to provide increased safety for homes and other establishments and facilities in areas adjacent to ammunition storage depots and to reduce the area and facilities required for the storage of a given amount of explosives and ammunition. Item #5 of this document (p. 1960) lists technical papers and studies prepared during the year, viz., scale model igloos magazine explosion tests (technical paper #4); igloo and revetments tests, Arco, Idaho, 1946 (technical paper #5); The Port Chicago, California, Explosion (technical paper #6); and the Igloo Tests, Arco, Idaho, 1945 (Revision of Technical Paper #3).
5 1963-9 11 Apr 47	Incl. #4 and #5 to Minutes of 98th Meeting of ANESB	This inclosure deals with the recommended changes in Army and Navy Safety Standard for the Storage of Explosives and Ammunition. Cited above and here mentioned again for record of work of ANESB for calendar year.
5 1981-2 19 Jan 48	Memo for Chief of Ordnance, USA, Chief of BuOrd, USN, Air Ordnance Officer from President, ANESB	Memo deals with changes in the barricaded distances specified in the "American Table of Distances." Memo states that barricaded quantity-distance relations specified in ATD...do not provide for reasonable and practical protection against loss of life, severe injuries, etc. Lists new barricaded distances recommended by Board to Secretaries of the War and Navy Departments. Recommends that present restorage plans and all plans for new magazine construction be reviewed and changed where practicable to provide as a minimum the outside safety distances (to inhabited buildings, etc. outside a government reservation) recommended by the Board's letter of 11 Apr 47.

Table B-1 (continued)

Reference Vol/Pp/Date	Document Identification	Fact/Datum (usually abstracted and/or paraphrased)
5 1990-1 17 Feb 48	Ltr to ANESB from Ordnance Dept, USA	Letter relates to modifications of explosive quantity-distance separation and storage proposed by ANESB. Questions ANESB regulations as they relate to proposed greater separation for all public highways and railways. Also questions some aspects of proposed q-d table for explosives quantities between 250,000 and 500,000 lbs.
6 2111-13 12 Nov 48	Incl 15 to 99th Minutes of Meeting of ASESB	This inclosure is the annual report of the Army activities of the Army-Navy Explosives Safety Board for fiscal year 1948. Item #6 indicates that during the year compilation and distribution took place of (a) safety standards for the construction and operation of piers and wharves for handling explosives and ammunition; (b) safety standards for the storage of smokeless powder; and (c) safety standards for the handling and loading of fertilizer grade ammonium nitrate aboard army vessels. Item #7 lists four papers published by the Board on matters pertaining to explosives safety.
6 2139-40 24 Nov 48	Minutes of 100th Meeting of ASESB	Item #4 states that the new quantity-distance tables, col. 6, Table I (inc #2) for inhabited buildings, public railways and highways was taken up. It was agreed that these distances were sound and should be prescribed for all new construction. Question as to whether they should be applied to existing installations was taken up but not resolved, pending further studies and reports to be made by each of the armed services at the next meeting.

Table B-1 (continued)

Reference Vol/Pp/Date	Document Identification	Fact/Datum (usually abstracted and/or paraphrased)
6 2147-2168 1 Nov 48	Memo for Members and Consultants, ASESB from Chmn	This memo is tab #2 of the minutes of Meeting #100 of the ASESB. It deals with quantity-distance standards for mass detonating explosives and ammunition. Item #1 lists relevant published information. Item #2 refers to British studies and tests. Item #3 indicates background of new American standards for the storage of commercial and military explosives and ammunition. Item #4 states that the staff and full time Board members have now completed the work which it was directed to carry out by the 13 Jan 48 meeting. States that question of the adoption of new explosives safety quantity-distance standards for mass detonating types of commercial and military explosives and ammunition should be reopened and disposed of. Enclosures include Table I (present ATD distances) and the distances adopted by the British, and the proposed distances (Oct 48) recommended for adoption as standard by the Board and the armed services.
6 2169-70 24 Dec 48	Minutes of 101st Meeting of ASESB	Item #3 related to the current status of the quantity-distance tables study. It was agreed that a meeting on subject would be held in the middle of January.
6 2181-5 30 Mar 49	Minutes of 102nd Meeting of ASESB	Item #18 related to review of new safety distances proposed by the Board. Copy of new British safety distances was offered to members. Brief discussion on Board's proposed safety distances, but it was decided to hold one more meeting on safety distances before thinking on subject formalized.

Table B-1 (continued)

Reference Vol/Pp/Date	Document Identification	Fact/Datum (usually abstracted and/or paraphrased)
6 2223-31 3 Jan 49	Report of ASESB for calendar year 1948	Item #5 (technical activities, begins p. 2225) indicates that during the year a review of about 300 explosions was made in order to reassemble the data to reappraise the minimum distances for explosives operations. As a result there was published a comprehensive report (Reappraisal of the American Table of Distances and Recommended Bases for Discussion, Modification and Final Approval of Minimum Risk Distances). At the same time, five memos were published related to distances considered acceptable from explosives concentrations and relating to inhabited buildings, barricades, etc. Note also made of recently adopted British standards.
6 2254-9 10 May 49	Minutes of 103rd Meeting of ASESB	Under item #3(b), Meetings and Conferences: (2) meeting of Board's subcommittee on new quantity-distance tables for mass detonating explosives and ammunition held on 11 Apr 49. All agreed on proposed outside distances; (3) same committee met on 25 Apr 49 and agreed on proposed inside distances. Item #7 stated that the present status of the new quantity-distance tables for class 9 and 10 explosives was discussed in order to iron out difficulties among the three Services in the wording of the proposed tables and letters to the Secretaries recommending adoption of the new quantity-distance tables.
6 2298-2301 15 Aug 49	Minutes of 104th Meeting of ASESB	Item #6 (Board's activities since last meeting): (c) states that 7 meetings of the subcommittee on quantity-distance were held. Hopes that after three more meetings work can be done and given to Board Members for review and submission to Services; (1) stated that Chairman contacted Secretary of Committee of Explosives Makers (original preparer of original data on which present ATD was based) and asked if they were planning on revising the tables. Told that they would discuss that at their next meeting. Item #9 indicated that a new subcommittee would be formed for new construction of piers and wharves, which Chairman felt was largest hazard at present.

Table B-1 (continued)

Reference Vol/Pp/Date	Document Identification	Fact/Datum (usually abstracted and/or paraphrased)
6 2305-13 27 May to 28 Jul 49	Memos for ASESB from Chairman of Subcommittee	On these pages are presented the deliberations and summaries of Meetings #1 to #7 of Board's subcommittee on development of proposed quantity-distance tables for class 9 and 10 explosives. Summary of deliberations noted for each meeting.
6 2346-50a 28 Oct 49	Minutes of 105th Meeting of ASESB	Item #4 reported on status of proposed quantity-distance tables for mass-detonating explosives. Para. 1 stated that information received that Attorney General is about to release an opinion that Board is authorized to establish its own standards. Item #14 (p. 2350) indicated establishment of a subcommittee to study hazards of explosives handling at piers and wharves. Pointed out that situations at piers and wharves will never be ideal and must accept safest situation as acceptable conditions.
6 2361-71 12 Sep to 17 Oct 49	Memos for ASESB from Chairman of Subcommittee	There are presented here summaries of meetings #8 through #12 of the Board's subcommittee on development of proposed quantity-distance tables for mass detonating explosives. Work of subcommittee is essentially finished.
6 2382-6 23 Dec 49	Minutes of 106th Meeting of ASESB	Item #9 dealt with the proposed quantity-distance tables and stated that it was agreed to delay letter signing to Secretaries recommending adoption of the proposed tables until comments are received from Makers of Explosives.

Table B-1 (continued)

Reference Vol/Pp/Date	Document Identification	Fact/Datum (usually abstracted and/or paraphrased)
6 2389-97 24 Feb 50	Minutes of 107th Meeting of ASESB	Item #5 indicated the status of new quantity-distance standards for mass-detonating explosives. Mentions interaction with Makers of Explosives and decision to...finish signing off letter to Secretaries. Item #9 mentioned status of explosives safety standards for piers and wharves. Data being assembled for preparing formulation of subcommittee to study safety standards for piers and wharves.
6 2413-27 6 Jan 50 and 14 Feb 50	Memos for ASESB from Safety Engineer, Technical Section	On these pages are three papers dealing with : (p. 2413-17) unbarricaded distances to inhabited buildings-outside and to quarters and inside for 15,000 lbs and less; (pp. 2418-22) subdivision of mass-detonating explosives as "military" and "commercial" explosives; and (pp. 2423-27) justification for inhabited building distances for line separations. Very interesting comment made on p. 2414 in which author stated that data gathered on missile hazard of small explosions...with certain recommendations for the modification of the quantity-distance standards...to have a constant distance of 1235 ft for unbarricaded explosives 15,000 lbs and less based on the missile hazard...The missile hazard basis was justified because most of the explosives used by the military were either in a metal casing or were stored in magazines or structures which could provide many hazardous missiles.
6 2435-7 3 May 50	Minutes of 108th Meeting of ASESB	Item #5 reported on status of explosives safety standards for piers and wharves, mostly accumulation of data for subcommittee. Item #6 listed status of new quantity-distance standards for mass-detonating explosives. As soon as comments come back from several interested divisions of Office, Chief of Ordnance opinion will be forwarded to Secretary of Army. Other Service replies expected shortly.

Table B-1 (continued)

Reference Vol/Pp/Date	Document Identification	Fact/Datum (usually abstracted and/or paraphrased)
6 2447-69 1 Apr 50	Ltr to Secretaries of Services from ASESB	This letter suggested recommended changes in Armed Service Safety Standards for the storage of explosives and ammunition. Study began with Board recommendation of 11 Apr 47 to Secretary of War and Sec Nav and ended with this enclosure entitled "Quantity-Distance Standards for Mass-Detonating Military Explosives and Ammunition."
6 2473-6 7 Jun 50	Minutes of 109th Meeting of ASESB	Item #3 indicated status of explosives safety standards for piers and wharves. Item #4 reports on quantity-distance tables standards status. Subcommittee will meet when answers are received from Services to put package together.
6 2478-86 25 May 50	Minutes of Subcommittee on piers and wharves	These papers present detailed minutes of the named subcommittee relating to their deliberations on setting up procedure for eventually preparing manual on subject topic.
6 2512-15 12 Jul 50	Minutes of 110th Meeting of ASESB	Item #3 gives status of quantity-distance standards for mass-detonating explosives. Secretary of Air Force had returned study for further clarification. Navy's BuOrd has tables under review. Item #9, status of standards for piers and wharves, is starting to coordinate with Secretaries of Services so that Board can be advised of information/regulations needed by the Board.
6 2517-37 23 Jun 50	Minutes of 2nd Meeting of Piers and Wharves Subcommittee	Subcommittee is discussing areas of limitation of study of safety standards for piers and wharves. Piers and wharves presently in use will be evaluated first, and then those under the mobilization plan.

Table B-1 (continued)

Reference Vol/Pp/Date	Document Identification	Fact/Datum (usually abstracted and/or paraphrased)
6 2540-4 25 Aug 50	Minutes of 111th Meeting of ASESB	Item #5 indicated status of explosives safety standards for piers and wharves. Mostly data collection going on. Item #6 stated that replies had been received from Secretaries of military Services to letter sent 1 Apr 50 regarding the quantity-distance tables. Subcommittee will be set up to analyze replies and decide on what steps to take next.
6 2550-5 25 Oct 50	Minutes of 112th Meeting of ASESB	Item #3 indicates that subcommittees met on standards for mass-detonating explosives and also piers and wharves study. Replies received to correspondence sent out to Services. Item #5 states that subcommittee has approved the technique...in the evaluation of piers and wharves. Item #6 merely related to Army correspondence relating to status of quantity-distance standards for mass-detonating explosives.
6 2556-60 21 Nov 50	Minutes of 113th Meeting of ASESB	Under Item #3 stated that letter forwarded to Army titled "Reconsideration of Department of the Army Rejection of the Board's Recommended Changes in Armed Services Safety Standards for the Storage of Explosives and Ammunition." Evidently Army has rejected Board's modifications (no associated correspondence was noted in Minutes of Meetings). Item #4 related to status of explosives safety standards for piers and wharves and stated that interim (first) evaluation of document completed. Item #5 indicated name change of subcommittee on quantity-distance standards for mass-detonating explosives to subcommittee for quantity-distance standards. Subcommittee was assigned project of recommending quantity-distance relationships necessary for piers and wharves and associated facilities handling ammunition and explosives.

Table b-1 (continued)

Reference Vol/Pp/Date	Document Identification	Fact/Datum (usually abstracted and/or paraphrased)
6 2566-70 19 Jan 50	Minutes of 114th Meeting of ASESB	Item #1(b) related to a comparative study of the effect of the Board's proposed quantity-distance tables vs. ATD quantity-distance tables. Study refuted American Ordnance Assn's. statement that application of the proposed tables would adversely effect 1/3 of existing explosives plants. Item 1(d) indicated status (little changed) of explosives safety standards for piers and wharves. Item 1(e) indicated that Army has not as yet accepted new quantity-distance tables. More study of Board's data required by Army.
6 no pp listed follows p. 2570 15 Jan 51	Verbatim Transcript (also only identified as "Meeting") of ASESB Meeting #114	On fourth page of these notes (unnumbered) Chairman (implication is that he is speaker) states that letter is due back from Secretary of the Army by 24 Jan. Indicates difficulties in trying to get Army to accept Board's recommended changes to quantity-distance standards.
6 2576-94 9 Apr 51	Minutes of 115th Meeting of ASESB	Item #4 reviews work of committee on piers and wharves and presented for approval form...for use in forwarding evaluations to Departments. Item #5 reviews (by Chairman) actions of three Services and status of project. Discusses actions that could be taken with Army to overcome their objections and it was decided that Board had fulfilled its mission of advising the Army in this matter. Other related alternatives discussed.
7 2640 21 Jun 51	Minutes of 118th Meeting of ASESB	Report starts here of quantity-distance standards committee. Mission of committee and their meetings is to determine as many intents as possible to 1 Apr 50 tables or related subjects in order that Service correspondence can be quickly answered, so that surveying engineers could be property guided, and so that Board would be uniform in their thoughts on matter concerned. Details given on following pages.

Table B-1 (continued)

Reference vol/Pp/Date	Document Identification	Fact/Datum (usually abstracted and/or paraphrased)
7 2651-4 5 Aug 51	Minutes of 119th Meeting of ASESB	Letter was sent to SECDEF asking for quick resolution of problem of a common standard for the Services. Several positions (minor, it seemed) on quantity-distance were discussed. Latter was Item #6 at meeting.
7 2656a-d 26 Jun 51	Memo for Chmn, ASESB from Off. of UnderSec of Army	Memo transmits 3-page Memo dealing with quantity-distance standards for mass detonating explosives and ammunition proposed by ASESB Memo concluded that proposed standards be reconsidered in accordance with recommendations of report.
7 2694-2704 14 May 52	Minutes of 123rd Meeting of ASESB	(p. 2696ff) Discussion on how to get (disagreeing) parties closer together in subject area. Chairman notes that all parties have same basic sources to turn to: recorded evidence of explosives incidents. Basic question is how those data are treated. Function of Board is to use recommendation and advice to secure reasonable degree of uniformity. (p. 2701ff) Discussion on quantity-distance panel for piers and ships. Objectives are specified.
7 2716-9 27 Jun 52	Minutes of 124th Meeting of ASESB	Long discussion on these pages of status of recommended quantity-distance standards of 1 Apr 50. Original proposal went to three Services, was accepted by Navy and Air Force. Army made counterproposal. No resolution to problem as yet.

Table B-1 (continued)

Reference Vol/Pp/Date	Document Identification	Fact/Datum (usually abstracted and/or paraphrased)
7 2728-57 21 Jul 52	Minutes of 125th Meeting of ASESB	Main reason for meeting was status of explosives safety standards for piers and wharves. Various interesting comments. One member (p. 2728) felt too much extraneous material was in standards. Another attendee noted (p. 2732) that only one standard to date was actually approved by the Board, that of 1 Apr 50 for mass detonating explosives. Point noted (p. 2736) that in the absence of definite Board standards ...the usual methods of the various services were used. Motion finally carried (p. 2756) that final consideration be delayed for another month.
7 2759-2801 23 Apr 53	Minutes of 126th Meeting of ASESB	Long, detailed discussions here relating to Phase I of the quantity-distance standards. Fair amount of discussion relating to the use of barricades and also to adoption of standards that would be agreeable to all the Services. No final decisions reached except to meet regularly (as frequently as weekly) until could finally agree on text of quantity-distance standards acceptable to all.
7 2802-40 29 Apr 53	Minutes of 127th Meeting of ASESB	Long, detailed, sentence-by-sentence meeting/discussion on recommendations relating to quantity-distance standards for mass-detonating military explosives and ammunition. Phase I relates to separation of igloo magazines and is considered relatively non-controversial. They were mainly recommended as a result of Arco tests. Phase II relates to separation from inhabited structures, highways, etc. and are considered more controversial. Unanimous agreement on standard modifications was not reached primarily due to Navy dissent on the basis that whole matter, both Phases I and II, should be forwarded for SECDEF approval as a common standard.

Table B-1 (continued)

Reference Vol/Pp/Date	Document Identification	Fact/Datum (usually abstracted and/or paraphrased)
7 2841-90 7 May 53	Minutes of 128th Meeting of ASESB	Long, detailed, paragraph-by-paragraph discussion on standards, continue reviewing q-d standards for mass detonating explosives and ammunition applicable to the separation of igloo magazines, separation of aboveground magazines and intraline separations. Meeting taking place weekly now in order to resolve outstanding problems with dispatch. No major executive decision notes. Voting takes place frequently on a sentence-by-sentence basis. When finished, Board will forward Phase I along with appropriate letter to SECDEF with advice for a common standard.
7 2891-2918 13 May 53	Minutes of 129th Meeting of ASESB	Continuation of work of previous Meetings, noted above. Review presented, starting on p. 2892, of results and analysis of Arco tests. More of sentence-by-sentence discussion and voting on Phase I work. Chairman states (p. 2919) at end of meeting that he thought could settle Phase I problem at next meeting and then shift to piers and wharves work.
7 2919-2939 19 May 53	Minutes of 130th Meeting of ASESB	Purpose of meeting is listening to Navy report of their analysis of their igloos in order to see if Board agrees that standard Navy igloo would meet certain requirements (p. 2919). Phase I work discussed to p. 2933 and then put off for a week while small, related study made on the question of adequacy of safety (p. 2933). Remainder of meeting related to general background and initial discussions relating to panel on piers and ships. No conclusions reached and matter to be continued at following Board meeting.

Table B-1 (continued)

Reference Vol/Pp/Date	Document Identification	Fact/Datum (usually abstracted and/or paraphrased)
7 2940-65 27 May 53	Minutes of 131st Meeting of ASESB	Long, detailed discussion relating to two hold-over amendments relating to Phase I of q-d standards. No final work completed and conclusion of efforts held over for following week's meeting. Going down all non-unanimous items one-by-one till all completed.
7 2966-86 3 Jun 53	Minutes of 132nd Meeting of ASESB	Meeting dealt mostly with detailed discussion related to quantity-distance standards for piers and ships. Previously had been sent to interested parties. No mention noted of current status of Phase I effort dealing with quantity-distance standards to mass-detonating ammunition.
7 2991-3 3 Aug 54	Minutes of 134th Meeting of ASESB	Head of work staff committee briefed Board on progress related to storage of two classes of ammunition in aboveground magazines (Item #5). Board is continuing its evaluations of piers and wharves installations (Item #7).
7 2994-5 2 Sep 54	Resume of 135th Meeting of ASESB	Item #4 indicated current status of work group on quantity-distance standards for mass-detonating explosives and ammunition. Two meetings since last progress report. Unresolved areas of disagreement: (1) are Board's standards legally binding?; (2) can agreement be reached by considering the standards in two phases?; (3) what constitutes an effective barricade?

Table B-1 (continued)

Reference Vol/Pp/Date	Document Identification	Fact/Datum (usually abstracted and/or paraphrased)
7 2996-3001 1 Oct 54	Resume of 136th Meeting of ASESB	Item #6 stated that Phase I quantity-distance work group reported that group was in agreement on standards for mass-detonating explosives applicable to separation of magazines and intraline separations except for: (a) definition of barricaded; (b) definition of unbarricaded which would be the converse of barricaded; (c) objection to the use of 75° angle. Decided that Board could not settle these differences at the present time and decided to hold another group meeting to prepage a formal report to the Board.
7 3001-39 to 3001-55 22 Sep 54	Minutes of 136th Meeting of ASESB	Long, detailed discussion on these pages relating to the 1 Apr 50 Board standard. Member states that it has taken since 1947 to prepare the currently (Board) accepted quantity-distance table. Chairman states that safety standard of 1 Apr 50 applies as far as the Board staff is concerned. Since it has not been accepted by the Services it is not a Defense Department standard. And to his knowledge that is the only Board standard that has been established so far. It is a Board standard inasmuch as it was accepted by the Board. No definitive, conclusive action taken.
8 3005-7 25 Oct 54	Resume of 138th Meeting of ASESB	Item #2 referred to work group's approved recommendations for Phase I quantity-distance requirements. Discussion to take place at next regular meeting. Item #4 merely brought up problem of applicability of DOD Directive 4145.1, 23 Jul 52, to heavier-than-air aircraft other than those using land runways. Also for next meeting. Item #6 originated at 125th Meeting and pertained to evaluation of piers and wharves. Chairman stated that he felt that making of population estimates by Board was not proper from standpoint of explosives safety and requirement was discontinued.

Table B-1 (continued)

Reference Vol/Pp/Date	Document Identification	Fact/Datum (usually abstracted and/or paraphrased)
8 3011-3023 11 Oct 54	Memo for Chmn, ASESB from Chmn, Work Group on Q-D standards	Memo indicates completion of mission for reconsideration of Phase I quantity-distance standards dated 1 May 53. New standards are contained as an enclosure (pp. 3012-23). Voted in Meeting of 11 Oct 54 that these standards be submitted to Board...as a uniform standard to replace previously mentioned ones.
8 3029-32 6 Dec 54	Resume of ASESB Meeting #139	Item #1 occupies essentially entire meeting and dealt with work group's recommendations for Phase I quantity-distance requirements. Long list of changes made are summarized in these pages of resume. Further discussion scheduled for future meetings of Board.
8 3033-5 17 Jan 55	Resume of 140th Meeting of ASESB	Item #4, which occupied most of meeting, related to listing of changes made to quantity-distance standards for mass-detonating explosives and ammunition applicable to separation of magazines and intraline separations (rev. 29 Nov 54).
8 3043-5 7 Feb 55	Resume of 141st Meeting of ASESB	Almost entire meeting taken up with continuation of action on quantity-distance standards for mass-detonating explosives and ammunition applicable to separation of magazines and intraline separations (rev. 29 Nov 54). Summary of changes made at this meeting appear in resume (relates to magazines).
8 3045A-C 30-31 Mar 55	Letters (3) to Service Secretary (Army, Navy, Air Force) from Chmn, ASESB	All three (identical) letters related to proposed Armed Service Standards for the Storage of Explosives and Ammunition, 1 Feb 55. Stated that the 1 Apr 50 new quantity-distance standards for mass detonating explosives and ammunition were forwarded to each Service and approved by Navy and Air Force but not the Army. New standards are being forwarded in hopes they will be approved by all Services.

Table B-1 (continued)

Reference Vol/Pp/Date	Document Identification	Fact/Datum (usually abstracted and/or paraphrased)
8 3046-8 7 Mar 55	Resume of 142nd Meeting of ASESB	Item #2 (and most of meeting) related to problems to be resolved prior to initial of Phase II (inhabited buildings, public railroads and highways) of quantity-distance study. Problems discussed included use of 1235 ft constant distance up to 15,000 lbs (unbarricaded); criteria used for substantial structural damage; use of a factor of 50 instead of 70 unbarricaded and 35 barricaded; use of several factors instead of two; use of the same factor for highways and railroads. Two barricade questions also raised. Discussion ensued of main differences between the ATD and Board's 1950 standards (see Verbatim Transcript, below). Item #3 related to Army's contention that they could not accept a degree of protection less than that provided by the ATD unless it can be proven that equivalent protection can be furnished. Other Service positions also noted. Items #4 through #7 relate to other issues discussed relating to these standards. Item #8 mentioned that draft of piers and wharves standards would be given Board Members for study. Will be on agenda for future Board action.
8 3048-16 21 Feb 55	Verbatim Transcript, 142nd Meeting, ASESB	During long discussion on currently discussed standards' revision, Board Secretariat Member stated that the main difference between the ATD and the 1950 Board standards is that the ATD has the most distant occurrence of any of those types of structural damage. The 1950 standards, however, do not take in the most distant occurrence of the particular structural damage.
8 3049-22 to 3049-30 12 Apr 55	Verbatim Transcript, ASESB Meeting #143	No resume for this meeting shown...and first hour devoted to classified material. Most of meeting taken up with discussion of study of all explosions that Board had record of (387 total, 59 unbarricaded). Long discussion on the factors to use for inhabited building protection, based on a study of these data.

Table B-1 (continued)

Reference Vol/Pp/Date	Document Identification	Fact/Datum (usually abstracted and/or paraphrased)
8 3050-3 16 May 55	Resume of 144th Meeting of ASESB	Item #1 indicated that 1 Feb 55 quantity-distance standards (applicable to separation of magazines...) were accepted by Navy and Air Force, possibly subject to minor revisions. Item #3 occupied most of meeting and dealt with study pertaining to quantity-distance standards for inhabited buildings, public railroads and highways. Military staff have concluded that the factor of 50 provides an acceptable amount of protection; some provision should be made on lower end of curve for missiles (exact amount of protection has not been determined); there should be an advisory (not mandatory) statement in standards indicating what factor should be used for special targets to acquire comparable protection as that afforded homes by the factor of 50. Items #4 through #9 dealt with other items being studied by the Board related to the quantity-distance standards. These included the study of individual explosions, acceptance of the idea that there should be only one minimum mandatory distance for inhabited buildings (disagreement of whether it should be 50 or 70, the number associated with the ATD), and discussion of a start being made for barricaded explosions.
8 3054-65 1 Feb 55	Incl 1 to Meeting #144	Quantity-Distance Standards for Mass-Detonating Explosives and Ammunition applicable to separation of magazines and intraline separations.
8 3071-8 2 May 55	Incl to Meeting #144	List of unbarricaded explosions in order of descending factors and remarks pertaining to these explosions.
8 3079 12 Apr 55	Incl to Meeting #144	Chart with above-mentioned unbarricaded explosions plotted thereon.

Table B-1 (continued)

Reference Vol/Pp/Date	Document Identification	Fact/Datum (usually abstracted and/or paraphrased)
8 3080-2 21 Jul 55	Resume of 145th Meeting of ASZSB	Item #1 stated that Army had accepted the 1 Feb 55 standards with no revisions. Item #2 indicated that the Chairman advised the Members of his decision regarding the protective distance to be provided for unbarricaded explosives concentrations. Decision was a factor of 50. Complete minutes covering this portion of meeting referred to below. Item #3 related to chart of unbarricaded explosions: total of 384 explosions considered, but only 64 of these were considered unbarricaded. Item #4 lists conclusions of Board military staff: up to 10,000 lbs, the new ATD (broken black line which is a factor of 40) is reasonable and acceptable protection from barricaded explosions; above 10,000 lbs. the explosion experience on which to base any conclusions is meager; proper protection in the area for which there has not been much experience lies somewhere between the factor of 40 and the factor of 50; other also. Item #7 lists the recommendations of the military staff; 0-10,000 lbs, the 1953 ATD at a factor of 40; 100,000 to 500,000 lbs, a factor of 50; 10,000 to 100,000, a gradually increasing factor from 40 to 50.
8 3084-92 18 Jul 55	Incl 1 to Meeting #144	Listing of six unbarricaded explosions and pertinent remarks pertaining thereto (these unbarricaded are in addition to those furnished members at the 144th Board Meeting).
8 3093 18 Jul 55	Incl 2 to Meeting #145	A revised chart showing the plotted unbarricaded explosions used by the Board military staff in their study of Phase II (inhabited building, highways and railroads). This revised chart supersedes previous chart of 12 Apr 55 furnished members at 144th Board Meeting.
8 3094-6 18 Jul 55	Incl 3 to Meeting #145	A list of barricaded explosions in order of descending factors and remarks pertaining thereto.

Table B-1 (continued)

Reference Vol/Pp/Date	Document Identification	Fact/Datum (usually abstracted and/or paraphrased)
8 3097 18 Jul 55	Incl 4 to Meeting #145	A chart with the above-mentioned barricaded explosions plotted thereon.
8 3098-3113 18 Jul 55	Incl 5 to Meeting #145	Listing of recorded explosions utilized by the Board staff in 1955 study.
8 3114-20 19 Jul 55	Incl 6 to Meeting #145	Extract of complete minutes of 145th Board meeting covering the Chairman's decision regarding the protective distance to be provided for unbarricaded explosives concentrations.
8 3120a 10 May 55	Memo for Chmn, ASESB from Asst Sec Army	Memo deals with proposed Armed Services standards for the storage of explosives and ammunition, 1 Feb 55. Memo indicates Army's acceptance of Chairman's recommendations.
8 3120b 13 Apr 55	Ltr from ASN (Mat) to Chmn, ASESB	Letter relates to proposed Armed Services Standards dated 1 Feb 55. Except for minor changes, standards are essentially same as those used by Services and will meet needs of Navy. Hereby approved by Navy.
8 3120c 26 Apr 55	Memo for Chmn, ASESB from Asst Sec Air Force	Memo relates to service standards for storage of explosives dated 1 Feb 55 and indicates Air Force approval of the proposed quantity-distance standards.

Table B-1 (continued)

Reference Vol/Pp/Date	Document Identification	Fact/Datum (usually abstracted and/or paraphrased)
9 3121-2 5 Aug 55	Resume of Meeting #146, ASESB	Item #3 listed military staff recommendations for barricaded inhabited distances at previous meeting, viz., 0-10,000 lbs, the ATD at a factor of 40; 100,000 to 500,000 lbs. at a factor of 50, and a gradually increasing factor of 40 to 50 for 10,000 to 100,000. Long discussion on these numbers with each Service indicating areas of agreement and disagreement. Navy wanted: 0-1500 lbs, factor of 40; 1500-2000 lbs, factor of 40-50; 2000-500,000 lbs, factor of 50. Item #4 also relates to this question. Item #5 touched on the problem of missile protection at the lower end of the curve for unbarricaded situations involving mass detonating ammunition. Chairman mentioned that missile information on hand...was meager and insufficient data existed on which to base recommendations.
9 3122-1 to 3133-24 1 Aug 55	Verbatim Transcript of ASESB Meeting #146	Almost entire meeting taken up with question of newly presented quantity-distance rules, including effect of missiles at relatively close-in distances. Most of discussion seems to be largely matter of opinion inasmuch as little hard data is being put forward. Possibly, however, data exist but are just not being mentioned at meeting. Chairman seems to sum up situation on p. 3122-14 when he states that he's going to "...have a pretty hard time justifying all the decisions to be made...due to some pretty vacant spots (in data)."

Table B-1 (continued)

Reference Vol/Pp/Date	Document Identification	Fact/Datum (usually abstracted and/or paraphrased)
9 3123-5 26 Aug 55	Resume of 147th Meeting of ASESB	Entire meeting devoted to question of outstanding problems of quantity-distance rules revision. Each service presented their views regarding this topic and their reasons for those views. Air Force's main comment related to dividing mass detonating explosives into missile-producing and non-missile-producing types. Air Force tests on 2.75" rockets served as basis for recommended constant mandatory distance. Navy's main comment was that a constant mandatory distance of 1235 ft as now required from 15,000 lbs down to 50 lbs is unrealistic and they recommended a gradated table from 50 lbs to 5000 lbs with unbarricaded distances varying from 225 ft to 1235 ft. Above 5000 lbs they suggested the same rules as 1 Apr 50. Army's main comment related to fact that 1200 ft currently used should probably be increased to 1800 across the board. Item #2 on agenda (above was Item #1) dealt with plotting a chart with missile data available to the staff. Plot represented average density of missiles landing at various distances from the sites of unbarricaded test and accidental explosions of miscellaneous items. Item #3 indicated that the Board staff recommended the following mandatory inhabited building distance for unbarricaded explosives: "Except for small quantities...staff recommends a mandatory inhabited building distance of 1200 (1235) ft from 0 to 14,000 (15,000) lbs unless results of tests conducted by Services or other data indicate that another distance provides suitable protection from missiles, in which case the controlling authority will specify the distance to be used..." Item #5 indicated that the Chairman had not made a decision as to what will be the basis for barricaded inhabited building distances because several items requiring solution may have a direct bearing on the matter.

Table B-1 (continued)

Reference Vol/Pp/Date	Document Identification	Fact/Datum (usually abstracted and/or paraphrased)
9 3125-1 to 3125-24 22 Aug 55	Verbatim Transcript, ASESB Meeting #147	Almost entire meeting devoted to issue of quantity-distance rules that can be agreed to by Board. Great amount of detail relating to reasons why each Service chose the numbers they did. Typical type of comment appears on p. 3125-2 where Chairman asks Air Force Member why he selected a particular distance. Answer was that the results of Air Force tests on 2.75" rockets GAR-1 and the "...files which didn't have too much accurate information on missile distances, (but)...feel that the number of missiles from an explosion with...3500 lbs. of explosives (that) beyond 750 ft...the missile per sq ft area (would be)...small."
9 3126-30 4 Oct 55	Resume of ASESB Meeting #148	Meeting dealt with quantity-distance standard modifications. Item #2 dealt with flying glass standard. Staff was unable to recommend a special factor to protect against this hazard and recommended that it be treated as in the Ordnance Safety Manual: "Inhabited building distances do not provide protection against glass breakage or injury to personnel..." Item #3 indicated that no recommendation could be made regarding structural damage on large churches, assembly halls, railway stations...Item #4 also specified that no recommendation was possible based on data available for hollow tile magazines and storehouses. Item #5 found same to be true for large oil, water storage tanks. Item #6 found same for large airplane hangars. Item #7 indicated that based on certain data from the Port Chicago explosion (and other explosion data) the staff did not consider it feasible to group buildings according to usage for special protection to the buildings or to individuals who may be within. Item #8 indicated that the Chairman recommended that one unbarricaded inhabited building distance be selected which will provide reasonable protection to all types of buildings. In Item #9 the Members gave Service reaction to the comments shown above (this entry). In remaining entries of Resume of Meeting various Services discuss the positions on various distances and explosives weight relating to the standards being debated. Further discussion on these topics was put over to next meeting.

Table B-1 (continued)

Reference Vol/Pp/Date	Document Identification	Fact/Datum (usually abstracted and/or paraphrased)
9 3130-1 to 3130-35 26 Sep 55	Verbatim Transcript of ASESB Meeting #148	Most interesting aspect of these 35 pages is the degree of discussion wherein main point seems to be an achieving of a common ground on which the Service Members can agree. Inasmuch as there is a great lack of available (or agreed upon) data, and since some standards or regulation must be agreed upon by all the Services, there is extensive "give and take" trying to come up with a standard that all can agree upon.
9 3131-3 no date given	Inclosure #1 to ASESB Meeting #148	Lists data pertaining to flying glass from explosions that were handed out to attendees at given meeting.
9 3134-7 no date given	Incl. #2, ASESB Meeting #148	Lists data on structural damage for large churches, assembly halls, railroad stations and theatres handed out at ASESB Meeting #148.
9 3138-40 no date given	Incl. #3, ASESB Meeting #148	Lists data pertaining to hollow tile magazines and storehouses and explosion damage information. Handout at ASESB Meeting #148.
9 3141 no date given	Incl. #4, ASESB Meeting #148	Specifies structural damage data to large oil and water storage tanks with exposed wooden roofs (Port Chicago explosion). Handout at ASESB Meeting #148.

Table B-1 (continued)

Reference Vol/Pp/Date	Document Identification	Fact/Datum (usually abstracted and/or paraphrased)
9 3142 no date given	Incl. #5, ASESB Meeting #148	Specifies structural damage data, large airplane hangars. Handout at ASESB Meeting #148.
9 3143-5 no date given	Incl. #6, ASESB Meeting #148	Presents data on substantial damage incurred between Factor of 50 and ATD. Handout at ASESB Meeting #148.
9 3146-7 24 Oct 55	Resume of ASESB Meeting #149	Item #3 related to decision of Chairman on matters in which Board Members are not in unanimous agreement with respect to inhabited building quantity-distance tables for mass detonating explosives. Chairman indicated that unless some additional data is presented, his decision outlined in given memorandum would hold (see entry, below). Item #4 listed Service positions on above-mentioned memorandum. Army and Navy needed more time for study; Air Force will recommend to Service Secretary that they be adopted as Air Force standards. Item #5 dealt with Air Force Member showing Board of apparent discrepancy between 23 Jul 52 Directive and 1 Apr 50 Board standards in relation to ammunition storage. Chairman stated problem would be referred to staff for study and recommendations.
9 3146-17 17 Oct 55	Verbatim Transcript, ASESB Meeting #149	Most of transcript deals with Chairman's memorandum to Board. Of special note was statement on p. listed of Air Force Member wherein he questions statement that "...increased distance shall be used..." in circumstance where missile hazard shall be greater. He asks, "how much greater?"

Table B-1 (continued)

Reference Vol/Pp/Date	Document Identification	Fact/Datum (usually abstracted and/or paraphrased)
9* 3148-57 11 Oct 55 (REPRO #1)	Memo for Members, ASESB from Chmn, ASESB	Memo deals with decisions of the Chairman in matter in which the Board members are not in unanimous agreement with reference to inhabited building quantity-distance tables for mass-detonating explosives. Memo states background of quantity-distance rules, indicates Navy and Air Force rules put into effect in 1950 and difficulties either in interpretation of these rules or the impracticality of their application, the fact that for the past several years the ASESB has been trying to get the three Services to adopt uniform standards for mass-detonating explosives. In order to establish uniform standards the Chairman resorted to provisions's of Board's charter covering cases of disagreement whereby he: (a) exercised power of decision; (b) allows dissenting member(s) right of appeal; and (c) matter is reviewed and resolved by decision of higher authority. Chairman's decisions follow.
9 3158 30 Nov 55	Resume of ASESB Meeting #150	Item #2 was the consideration of the proposed draft "Quantity-Distance Standards for Manufacturing, Handling and Storage of Mass-Detonating Explosives and Ammunition at Military Establishments" of 1 Nov 55. Unanimous agreement by Members except for four items.
9 3165-86 no date given	Incl. #4, ASESB Meeting #150	Draft of "Quantity-Distance Standards for Manufacturing, Handling and Storage of Mass-Detonating Explosives and Ammunition at Military Establishments."
9 3188 16 Dec 55	Resume of ASESB Meeting #151	Item #2 related to Chairman's previous memorandum (11 Oct 55, see above) "Decision of the Chairman on Matters..." Since the writing of this memorandum certain statements needed clarification, and another modifying memo was given to Board members at this meeting; see following for more detail.

* Material reproduced in Appendix D.

Table B-1 (continued)

Reference Vol/Pp/Date	Document Identification	Fact/Datum (usually abstracted and/or paraphrased)
9* 3190-1 12 Dec 55 (REPRO #2)	Memo for Record, from Chmn, ASESB	Memorandum deals with certain explanatory statements in Chairman's 11 Oct 55 memorandum to Board Members which required clarification. Four items detailed, mostly dealing with references to the American Table of Distances.
9 3191A 6 Dec 55	Memo for Sec'y Army (Logistics) from Chmn, ASESB	Memo deals with proposed Armed Services standards for Manufacturing, Handling, and Storage of Explosives and Ammunition, 1 Dec 55. Memo forwards new standards which are also being forwarded to other Services for approval.
9 3192-3210 6 Dec 55	Incl to Memo, above	"Quantity-Distance Standards for Manufacturing, Handling and Storage of Mass-Detonating Explosives and Ammunition at Military Establishments."
9 3211 15 Dec 55	Memo for Board, from Chmn, ASESB	Lists suggested projects considered to be under Board's jurisdiction.
9 3214-5 4 Apr 55	Resume of 153rd Meeting of ASESB	Item #2 referred to the status of approvals by Services of 1 Dec 55 Quantity-Distance Standards for Manufacturing, Handling and Storage of Mass-Detonating Explosives and Ammunition at Military Establishments. All being coordinated with Staff or Secretary. Item #5 pertained to action to be taken on draft of "Safety Standards for Construction and Operation of Piers and Wharves Handling Explosives and Ammunition" of 10 Feb 55. Services are to furnish comments. Item #6 gave current status on Explosives Safety Standards for Aircraft Runways. In Item #7 it was suggested that thought be given to the different hazard classifications used by the Services for several newer explosive items with a view toward standardization. Agenda item for following Board meeting.

* Material reproduced in Appendix D.

Table B-1 (continued)

Reference Vol/Pp/Date	Document Identification	Fact/Datum (usually abstracted and/or paraphrased)
9 3229-30 19 Apr 56	Resume of ASESB Meeting #154	Item #3 indicated Department of the Army approval for 1 Dec 55 Q-D standards when single change made to Para. B3, p. 4. Action on matter deferred until other Services comments received on proposed change. Item #6 related to Piers and Wharves Safety Standards. Army comments received and still waiting for other Services. Item #7 related to status of staff work in preparation for revision of DOD Dir 4145.1 (aircraft runways explosives safety standards). Item #8 discussed Board actions taken to resolve different hazard classification used by Services for many explosive items. To be discussed at next Board meeting.
9 3231-2 5 Jun 56	Resume of ASESB Meeting #155	Items #1 and #2 dealt with status of approval of new standards by the three Services. Long discussions dealing with various changes wanted by each of the Services prior to approval of final document. Item #4 related to the status of Navy and Air Force comments on safety standards for piers and wharves document. Each in process. Item #5 dealt with problem of resolving different hazard classifications used by the Services for many explosives items. Different suggestions made by Board members.
9 3238-9 28 Jun 56	Resume of 156th Meeting of ASESB	Item #1 pertained to the status of approval of 1 Dec 55 quantity-distance standards. Main difficulty is with Air Force getting staff coordination. Navy has accepted these standards for adoption and issuance subject to qualification and understanding that Board...will reconsider the areas of 250,000 to 500,000 barricaded. Item #2 dealt with suggested revision of Para IIb3 of 1 Dec 55 standards. Time requested by Members to study changes. Item #6 dealt with main changes or revisions of aircraft runway directive. Future study needed. Item #7 was continuation of the discussion concerning different Service hazard classification for explosives items. Long discussion led to agreement that Board go on record as suggesting to Services that full coordination be obtained on interservice areas when classification tests are contemplated.

Table B-1 (continued)

Reference Vol/Pp/Date	Document Identification	Fact/Datum (usually abstracted and/or paraphrased)
9 3240-1 no date listed	Encl. #1 to Resume of ASESB Meeting #156	Revision of Paragraph IIb3 of Board's 1 Dec 55 standards. Lists present working, Army, Navy, Staff suggested changes. Notes indicate reasons for changes.
9 3254-69 no date listed	Encl #4 to Resume of ASESB Meeting #156	Presents 15 Jun 56 Proposed Revision (prepared by ASESB) for "Quantity-Distance Standards for Mass-Detonating Military Explosives and Ammunition."
9 3270-1 24 Jul 56	Resume of ASESB Meeting #157	Item #2 pertained to status of approval by Air Force of 1 Dec 55 quantity-distance standards. Delay to be investigated. Item #3 unanimously adopted Navy's proposed revision of Para. IIB3 of 1 Dec 55 standards. Item #7 related to Board Member's comments of proposed revision of aircraft runway directive. Navy member suggested several clarifications. Time required by others to study suggested changes.
9 3273-6 21 Jun 56 to 9 Jul 56	Ltrs to Chmn, ASESB from Army, Navy, Air Force Board Members	Letters all related to revision of paragraph II.B.3. of quantity-distance standards dated 1 Dec 55. Lists responses of three Service Members of Board to proposed paragraph change. All give approval with qualification.

Table B-1 (continued)

Reference Vol/Pp/Date	Document Identification	Fact/Datum (usually abstracted and/or paraphrased)
9 3283-5 29 Aug 56	Resume of ASESB Meeting #158	Item #2 was an announcement that the Air Force had accepted the 1 Dec 55 quantity-distance standards. They had previously been accepted by the Army and Navy (see above). Air Force suggested that para. 1B be revised however. Approved wording given..."where existing quantity-distance situations do not meet the minimum requirements of these standards, reasonable efforts shall be made to comply by long-term restorage and by limiting the quantities of explosives permitted to the minimum consistent with operational requirements..." Item #3 dealt with report of status of Army policy determination regarding pier and wharf evaluations made by Board staff. Item #5 was proposed revision of aircraft runway directive. Held off for future meeting. Item #7 pertained to handling of ammunition at Naval Magazine, Port Chicago, Calif. Board Members were briefed by Navy Member on present status and...agreed that Navy would send a memorandum of record to Board. Item #10 related to the problem of resolving Service differences in explosive hazard classification. It was recommended that the resolution of Service differences in hazard classification be achieved by Service agreement after each of the Services has evaluated results of tests which have been conducted or are planned.
9 3285-1 to 3285-8 20 Aug 56	Verbatim Transcript. ASESB Meeting #158	During long discussion of Air Force acceptance of 1 Dec 55 standards (with suggestion for paragraph clarification), several interesting comments: (p. 3285-4) Alternate Navy Member asked whether the Board has the authority to supersede the ATD and Chairman noted that Attorney General, in his paper of 1950,...stated...that Board has the authority to establish standards and make changes to such standards as required. On following page (3285-5) Chairman, Air Force Member, and Secretariat Member state in conversation that the intent of the current write-up grew from the conviction that the other standards were outdated and thus... Board recommended new standards. The previous write up of standards (1 Apr 50) wiped out everything before that...and since 1 Apr 50 the Board has approved no replacement standards.

Table B-1 (continued)

Reference Vol/Pp/Date	Document Identification	Fact/Datum (usually abstracted and/or paraphrased)
9 3287 20 Mar 56	Memo for Chmn, ASESB from Dept. Asst Sec Army	Memo related to proposed Armed Services Standards for Manufacturing, Handling, and Storage of Explosives and Ammunition, 1 Dec 55. Memo states Army approval of new standards when given change to Para. B3 (p. 4), Sec II is made for clarification.
9 3288-9 13 Jun 56	Memo for Chmn, ASESB from Asst SECNAV (Matl)	Memo relates to standards, as above, and indicates they are satisfactory for general Navy use. Suggests certain anomalous situations that might arise under new standards; recommend few modifications.
9 3290 1 Aug 56	Memo for Chmn, ASESB from Asst SEC Air Force	Memo relates to DOD Standards for mass-detonating explosives and states Air Force acceptance of quantity-distance standards of 1 Dec 55. Suggests major change to one paragraph.
9 3291-2 24 Aug 56	Memo for Secretaries of Services from Chmn, ASESB	Memo relates to proposed Armed Service standards of 1 Dec 55 and states which recommended changes by each of the Services has been incorporated into the final standards (see above).
10 3316-8 20 Sep 56	Resume of 159th Meeting of ASESB	Item #6 related to the status of review of proposed pier and wharf standards. Further review is needed by experts within the Services prior to final adoption of the standards. Item #9 indicated that Air Force had accepted, without qualification the 1 Dec 55 quantity-distance standards for...mass-detonating explosives and ammunition at military establishments.

Table B-1 (continued)

Reference Vol/Pp/Date	Document Identification	Fact/Datum (usually abstracted and/or paraphrased)
10 3318-4 to 3318-5 17 Sep 56	Verbatim Transcript, ASESB Meeting #159	During discussion on quantity-distance standards for aircraft runways, Secretariat Member indicates that idea of standard is to give a pretty good idea that when the peak pressures hit (in this case, airplanes) at a certain quantity-distance you know what type of damage will occur at that point. That was how the factor of 50 was derived for airfield runways. It was based on the actual experience of accidental explosions at airfields and what happened to aircraft with that accidental explosion. It had nothing to do with houses or other types of targets. The fact that the factor of "50" appears other places (in the standards) is purely a coincidence. For all other facilities (associated with aircraft) the 1 Dec 55 standards still apply.
10 3318-9 to 3318-10 17 Sep 56	Same as above	In discussion about standards for liquid propellants, ASESB Secretariat Member stated that in developing quantity-distance standards for these substances tendency has been to state the hazards in relation to a single specific component...without dealing with situation that would exist if these components were accidentally mixed (forming an explosive mixture). Indicated that working group handling this study.
10 3325-6 26 Oct 56	Resume of 160th Meeting of ASESB	Item #1 was an announcement that the 1 Dec 55 standards on quantity-distance rules were forwarded to Office of SECDEF for promulgation. Item #3 related to revision of quantity-distance standards for aircraft runways. Final action of this item was postponed pending additional study. More details on this follow.

Table B-1 (continued)

Reference Vol/Pp/Date	Document Identification	Fact/Datum (usually abstracted and/or paraphrased)
10 3326-8 to 3326-11 15 Oct 56	Verbatim Transcript, 160 Meeting of ASESB	In discussing revision of quantity-distance standards for aircraft runways several interesting comments made. He stated that aircraft standards relate exclusively to this topic and do not tie in with other aspects of the standards. If the distances specified as safe vary from protected object to protected object, it is due to the differences in the hardness of these objects. In general the factors are lower for aircraft because of their relatively greater hardness.
10 3359-62 27 Nov 56	Resume of 161st Meeting of ASESB	Item #3 related to revision of quantity-distance standards for aircraft runways. Comments received by the Services. Recommendations based on results of study will be furnished to the Members. Following Board approval, standards will be forwarded to Services. Item #5 related to Staff recommendation for standardizing hazard classifications now existing and for determining hazard classification of items subsequently developed. Eight recommendations were made, including (d): when tests are to be run by one Service and Board is aware of this, examine the precept for the test to insure that all data useful to the Board will be obtained if feasible, and that Services and agencies that would have an interest in the specifications for and results of the tests, are informed. Item #9 states that comments were received on the proposed manual dealing with piers and wharves and resolved on a unanimous basis. Manual was accepted by the working group except for Chapter IV on quantity-distance which was just drafted. Will be submitted to Services for concurrence and to Department of Defense for promulgation as a DOD publication.

Table B-1 (continued)

Reference Vol/Pp/Date	Document Identification	Fact/Datum (usually abstracted and/or paraphrased)
10 3365-6 25 Jan 57	Resume of 162nd Meeting of ASESB	Item #2 states that the Board voted approval of work group's revised version of quantity-distance standards for aircraft runways. Army Member believed that it would be more consistent to measure distances from the sides instead of center of aircraft runways...but he agreed to use center on a calculated risk basis due to problems involved in making the change. Item #3 stated that pier and wharves manual was in condition so that it would soon be re-submitted for final concurrence by Board Members. Item #4 listed recommendations on standardization of criteria for hazard classification (see Resume of Meeting #161 of ASESB).
10 3366-1 to 3366-8 22 Jan 57	Verbatim Transcript, 162nd Meeting of ASESB	During long discussion relating to revision of quantity-distance standards for runways two interesting points were raised: (p. 3366-2) Chairman stated that for all the standards, when distances are laid out for clearance, Board should follow the pattern of taking the distance from an edge where you want your closest exposure because while everyone expects them (aircraft, other objects) to land in the center... it has been Chairman's experience that they do not. (p. 3366-8) USAF Member asks whether the Air Force recommendation for quantity-distance standards for less than 1500 lbs. will be established and incorporated into the standards. He is told by a Secretariat Member that they will.
10 3366-14 22 Jan 57	Same as above	During discussion on standardization of criteria for hazard classification, Alternate Army Member was told that Board would establish a standard and require the Services to abide by it and conform in the set-up of each new item. If new items are now accomplished in the standards as established, then they would be later established to suit that item.

Table B-1 (continued)

Reference Vol/Pp/Date	Document Identification	Fact/Datum (usually abstracted and/or paraphrased)
10 3367-85 30 Jan 57	Ltr from ASESB to Asst Sec'ys. of three Services	Letter requests Service approval of quantity-distance standards for aircraft runways. Enclosure is copy of relevant document ("Quantity-Distance Standards for Mass-Detonating Military Explosives or Ammunition Facilities.")
10 3387-97 7 Dec 56	DOD Directive	Copy of Department of Defense Directive 4145.17, date noted.
10 3398-9 6 Mar 57	Resume of 163rd Meeting of ASESB	Item #2 reports on the status of quantity-distance standards covering aircraft runways. Item #3 stated that Technical Division Chief outlined the current status of the proposed standards on piers and wharves. Chapter 4, which proposed inhabited building distances based on data developed from analysis of the Port Chicago explosion, was discussed with Navy representatives. Discussion with Army and Air Force remains to be done. Item #5 related to proposed revision of Board Charter (see below).
10 3399-18 to 3399-20 18 Feb 57	Verbatim Transcript, Meeting #163 of ASESB	During long discussion on proposed revision to Board Charter, question arose relating to origin of statement "...this does not include explosives and ammunition on board combat vehicles, ships, aircraft or in combat areas..." Chairman asked for origin and was told by Navy attendee that, although he was not sure of origin of rule, it is sort of established principle, may have come from the original hearings held by Congress, and in any case, the Board would probably be unable to enforce its authority in those cases. Chairman terminated discussion when he felt it was getting into a "fuzzy" area.

Table B-1 (continued)

Reference Vol/Pp/Date	Document Identification	Fact/Datum (usually abstracted and/or paraphrased)
10 3400-1 29 Mar 57	Resume of 164th Meeting of ASESB	Item #1 reported that approval was obtained from each Service for quantity-distance standards for aircraft runway standards. Proposed changes were made and standard was forwarded to SECDEF for promulgation as a standard. Item #2 states current status of piers and wharves standard. Chapter 4 dealing with quantity-distance standards is still being worked on. Item #4 dealt with a proposed ASESB policy of standardization of hazard classification of explosives and propellants. Further consideration postponed until following meeting.
10 3401-7 25 Mar 57	Verbatim Transcript, ASESB Meeting #164	Details presented here relating to the promulgation letter for the piers and wharves manual. In covering letter history of directives ordering the preparation of the manual and also to a considerable extent, the approach to quantity-distance rules (Chapter 4).
10 3402-5 19 Mar to 29 Mar 57	Correspondence between ASESB and Army, Navy, Air Force	Four different items of correspondence are presented in these pages relating with the explosives safety standards for airfields, lighter-than-air facilities, heliports and seadromes. Generally presents Service concurrence subject to proposed changes (only by Navy).
10 3406-24 2 Apr 57	Ltr to SECDEF from Chmn, ASESB	Letter forwards "Quantity-Distance Standards for Mass-Detonating Military Explosives or Ammunition Facilities." Mentions that standards supercede DOD Directive 4145.1 (23 July 52).
10 3428-9 20 Mar 57	Memo for ASESB from Navy Secretariat Member	Memo related to proposed ASESB policy regarding standardization of hazard classification of explosives and propellants. Indicates general Navy concurrence subject to drawing of lines between Service responsibility and ICC classification requirements.

Table B-1 (continued)

Reference Vol/Pp/Date	Document Identification	Fact/Datum (usually abstracted and/or paraphrased)
10 3431-2 9 May 57	Resume of 166th Meeting of ASESB	Item #2 concerned the ASESB policy of standardization of hazard classification of explosives and propellants. Board did not make a final policy decision and placed it on a future agenda. Item #3 related to proposed changes in the Board's requirement for on-site evaluation of piers and wharves. Present requirement was considered unrealistic. Board was not ready to discuss revised requirements and these were put off to following meeting. Item #4 stated that work group reviewing the proposed piers and wharves explosives safety manual had completed all work except for Chapter IV on quantity-distance standards. Work would begin with another work group on 23 Apr 57 on this chapter.
10 3434-5 5 Apr 57	Memo for ASESB from Navy Secretariat Member	Memo relates to proposed changes in the Board's requirements for on-site evaluation of piers and wharves. Memo lists background of problem and proposes five actions to be taken in future. Item #3, of special interest, states that DOD Directive 4145.7 (7 Dec 56) should be used except that: (a) for explosives concentrations in ships and barges, tentative standards in the proposed (20 Feb 57) piers and wharves explosives safety manual should be used as a guide, with the formula being utilized in the case of quantities not shown in the tables; and (b) for fire or missile hazards, the Navy's OP 5 Tables 1 through 8....should be used.
10 3436-7 11 June 57	Resume of 167th Meeting of ASESB	Item #1 related to the work group reviewing Chapter IV (quantity-distance standards) of the proposed piers and wharves explosives safety manual and indicated current status of work group in this area. Item #3 stated that differences of opinion existed among Board Members on the subject of Board's functions in the area of hazard classification of explosives and propellants. Differences evidently cannot be resolved by the Staff alone. Chairman will appoint a work group to review and submit a recommended course of action to Board.

Table B-1 (continued)

Reference Vol/Pp/Date	Document Identification	Fact/Datum (usually abstracted and/or paraphrased)
10 3437-1 to 3437-5 20 May 57	Verbatim Transcript of ASESB Meeting #167	During discussion of piers and wharves manual, member of working group mentioned that majority were in favor of resolving big problem of inhabited building distance from the piers. Method of resolution was to use a factor of 70 for the new pier installations; and for old, existing installations where distances of a factor of 70 were unobtainable, to use a factor of 50. Army Board Member raised question of legality of varying factors in quantity-distance and suggested that either 50 or 70 be chosen. Navy Secretariat Member stated that 1 Dec 55 standards said "...these standards will prevail..." but if you can't reach them "...then activities cited in accordance with the 1 Apr 50 standards or the ATD will prevail." Navy Secretariat Member thought this was a precedent of what one could do in the event the present standard couldn't be met. Chairman stated that if Board thought it timely he might look into the exact basis of development of the stand. But then he stated it was not timely then and recommended that work group continue with finishing up Ch. IV of piers and wharves manual.
10 3454-5 5 Jul 57	Resume of 169th Meeting of ASESB	Item #1 stated that the work group had completed Chapter IV of proposed piers and wharves explosives safety manual (quantity-distance standards). Proposed changes to original document are being compiled for submission to Board Members for review and comment. Item #4 related to the acceptability of proposed changes to Board's criteria for onsite evaluation of piers and wharves (ASESB memo 226-57/6 of 5 Apr 57). The proposed changes were developed because it was felt that the present perimeters were not realistic. Navy and Air Force Members agreed with proposed changes; Army demurred; and so it was decided to make changes to get an acceptable compromise prior to starting the evaluations scheduled for later in month.

Table B-1 (continued)

Reference Vol/Pp/Date	Document Identification	Fact/Datum (usually abstracted and/or paraphrased)
10 3455-2 and 3455-3 17 Jun 57	Verbatim Transcript of ASESB Meeting #169	Work group member dealing with proposed piers and wharves explosives safety manual (Chapter 4 on quantity-distance standards) stated that he would put in his forwarding letter areas of 100% concurrence and areas of disagreement. Main issue was that Army wanted straight factor of 70 whereas Navy and Air Force would accept a factor of 70 for the new, 50 for the old.
11 3458-9 22 Jul 57	Resume of 170th Meeting of ASESB	Item #3 indicated that Board approved changes to criteria for on-site evaluation of piers and wharves. The approved changes (ASESB Memo 226/57/6, 5 Apr 57) were developed because former parameters were judged unrealistic.
11 3470a-b 19 Jun 57	Memo for ASESB from Chairman	Memo relates to onsite evaluation of piers and wharves and makes modifications to original ASESB memo (#226/57/6, 5 Apr 57) on this topic.
11 3477-14 16 Sep 57	Verbatim Transcript, 172nd Meeting ASESB	During long discussion on storage requirements for Nike-Hercules, Secretariat Member mentioned (as part of more general topic) neglect entirely of the missile and other secondary damage from blast. Way in which topic was mentioned seemed to indicate that this was a general problem area.
11 3501-10 21 Oct 57	Verbatim Transcript, ASESB Meeting #174	During discussion relating to recent Board decision on Nike complex topic of damage from missiles came up. Alternate Army member mentioned that although Army people recognize the seriousness of the missile problem, the (safe) distances prescribed in no way anticipate protection against those. Topic dropped.

Table B-1 (continued)

Reference Vol/Pp/Date	Document Identification	Fact/Datum (usually abstracted and/or paraphrased)
11 3507-8 29 Nov 57	Resume of 175th Meeting of ASESB	Item #2 indicated that the Staff reviewed a proposed "Extension of Table 2, DOD Directive 4145.17, 7 Dec 56" which provided for amplification to the existing Table. Board approved the extension with the provision that controlled interpolation was authorized. Some details presented below. Item #6 dealt with the question of need for reconsideration of Inhabited Building Distance Factor prescribed by ASESB Quantity-Distance Standards. Considerable discussion. Chairman stated that a resume of the background and history leading to Standards' development would be given at a future meeting. Details below.
11 3508-13 to 3508-22 18 Nov 57	Verbatim Transcript, 175th Mtg. of ASESB	Topic discussed during these pages is determination of need for reconsideration of inhabited building distance factor prescribed by ASESB quantity-distance standards. Seems to be much confusion during discussion relating to background and history of 1 Dec 55 standards. One of biggest issues seems to be (desired) use of factor of 50 instead of current factor of 70 (see p. 3508-13). Further (p. 3508-17) Member from Navy states that standards now give an overpressure of about 0.5 psi and the Army point of view was that overpressure of about 1.5 psi would be more reasonable to accept. On p. 3508-22 Air Force Member mentions that he thinks Board must decide whether to take a 3% damage factor (as he says was used in the Ports and Wharves Document) or 1%. Must decide how much damage to accept. Chairman says there will be a future presentation in which it will be demonstrated what a factor of 70 does, why it may not be applicable to piers and wharves, and why the same factor may not be applicable to an aircraft runway standard under a parallel set of circumstances.

Table B-1 (continued)

Reference Vol/Pp/Date	Document Identification	Fact/Datum (usually abstracted and/or paraphrased)
11 35-11-12 23 Oct 57	Memo for Members, ASESB from Chmn, ASESB	Memo presents proposed extension of Table 2, Encl 1 of DOD Directive 4145.17. Discusses, and presents table for, extending the Table between 0 and 1,000 pounds. Table presented as enclosure.
11 3513-16 6-21 Nov 57	Correspondence between Services and Chmn, ASESB	Various letters present views and comments of various Services regarding memo referred to above. There is general concurrence plus additional comments regarding Table presented.
11 3517-8 3 Jan 58	Resume of 176th Meeting of ASESB	Item #1b states that all three Services have either obtained or are getting coordination on proposed Piers and Wharves Manual. Discussed problems in this connection including (1) maximum factor of 50 or 70 and (2) whether to issue supplement or separate manual to present Q-D standards. Item #1d related to work group on hazard classification and their development of minimum criteria to be used in setting up tests for establishing uniform hazard classification.
11 3518-1 to 3518-8 16 Dec 57	Verbatim Transcript, 176th Meeting ASESB	Long discussion of status of Piers and Wharves safety manual. Background presented for changes made to proposed Ships and Wharves manual. Mentions (p. 3518-7) that DOD Directive 4145.17 has nothing to do with concentrations of explosives in ships and barges and it's so stated.
11 3518-8 to 3518-16 16 Dec 57	Same as above	Long discussion relates to determination of need for reconsideration of inhabited building distance factor prescribed by ASESB q-d standards. Main issue relates to use of factor of 50 versus 70 (Army seems to be only Service in favor of 70). After discussion vote was still non-unanimous (Army dissented) and Chairman said he would render a decision (cast deciding vote) on topic but he asked that each Service subsequently present a position for his review prior to his vote. All agreed to do so. Topic then deferred.

Table B-1 (continued)

Reference Vol/Pp/Date	Document Identification	Fact/Datum (usually abstracted and/or paraphrased)
11 3519 9 Dec 57	Memo for Members, ASESB from Chmn, ASESB	Memo relates to Agenda items at 176th Meeting of ASESB. Item #1b mentions that 1956 Quantity-Distance Standards were the result of necessary compromises (as was its predecessor, the 1950 Standards). Further suggests that each set of standards be developed independently upon its own merit, based on tests, results of explosions and applicable experience, without dependence on other existing standards.
11 3523-4 6 Feb 58	Resume of 177th Meeting of ASESB	Item #3a mentioned that consolidation still ongoing on proposed Piers and Wharves Standards by Services. Chairman also having a technical analysis made of safety factors which will assist in arriving at a decision in the selection of one factor for para. 4 of the Standards.
11 3525-6 10 Mar 58	Resume of 178th Meeting of ASESB	Item #1a indicates current status of technical panel of work group on hazard classification. So far they have listed, for each category, the information desired about the performance of items of that category under various conditions, to permit proper evaluation and hazard classification. Item #6 indicated that the Chairman discussed factors in the proposed Piers and Wharves Manual. The Navy and Air Force voted for a factor of 50 and the Army had voted for a factor of 70 during Meeting #177. Chairman briefed Board on a study made on the topic and announced that he had decided in favor of a factor of 50. A summary of the Chairman's decision is given in a separate memo to the Board (see following).

Table B-1 (continued)

Reference Vol/Pp/Date	Document Identification	Fact/Datum (usually abstracted and/or paraphrased)
11 3526-11 to 3526-32 24 Feb 58	Verbatim Transcript, ASESB Meeting #178	Long discourse detailing the history and background of the usage of factor of 70 versus 50. ASESB Staff Member states (p. 3526-14) that in the past there were three major sources of information in which the sources desired to present a complete picture of the hazard from explosions from the source out to the area of minor damage. Also, to correlate these so-called zones of damage with peak pressures. Sources shown are (1) R&E Section of the British Ministry of Home Security on enemy bomb damage in the UK; (2) was AEC data published in Effects of Nuclear Weapons in 1950 and updated in Effects of Nuclear Weapons in 1957. These data were based on Hiroshima and Nagasaki bomb damage (1950 volume) and Nevada test site atomic and conventional weapons (1957 volume); (3) research by staff of ASESB. This latter includes a complete analysis of the Port Chicago explosion and the research of the results of test to tie in the damage from tests to peak pressures as in the 1945/6 Arco tests. ASESB staff member states further (p. 3526-27) that he thinks that ATD basis on which they worked out probability of death and injury was excellent, but he thinks interpretation of ATD basis has not been followed. Finally (p. 3526-32), Chairman states that on basis of material presented at Meeting #178, personal analysis of information, and the positions expressed by Services, he will advise that a factor 50 will be used in the Piers and Wharves standards as the minimum. Situation closed. Related documents and follow-on papers appear below.
11 3531-3 21 Jan 58	Ltr from Alt Army Member, ASESB to Chmn, ASESB	Letter summarizes Army reasons for negative vote on adopting Tables IIA and IIB of Proposed ASESB Standards for Piers and Wharves. Main objection seems to be that formula for Piers and Wharves should be same as other explosive situations since these explosives would react the same as similar explosives stored inland.

Table B-1 (continued)

Reference Vol/Pp/Date	Document Identification	Fact/Datum (usually abstracted and/or paraphrased)
11 3523-5 27 Jan 58	Ltr from Navy Member to Chmn, ASESB	Letter deals with Quantity-Distance Factor for ASESB Piers and Wharves Manual. Letter explains Navy Member of Board's view as to why q-d factor of 50 will provide adequate protection to personnel in the case of the explosion hazard situations covered by ASESB Piers and Wharves Manual. States that using factor of 70 would require acquisition of excessive and unnecessary amount of land to achieve very minor improvement in personnel protection. No factor will ever give complete protection. Item #4 in letter quite interesting: states that quantity-distance factors are not established to prevent personnel injury by missiles (fragments) projected by the blast. This, he states, is because the frequency of injury by missiles beyond the 50 factor is very low and because a very large factor (several hundred) would be needed to eliminate completely the danger of (all) fragments.
11 3536 9 Jan 58	Ltr from Air Force Member, ASESB, to Chmn, ASESB	Letter discussed Air Force Member's views on separation distances from ship and barge units containing explosives to inhabited buildings. Member agrees that factor of 50 should be acceptable and states his reasons. Mentions that personnel injuries can be expected from flying glass out to a distance corresponding to a factor of K=200.
11 3537-44 13 Mar 58	Memo from Chmn, ASESB to Members, ASESB	Memo presents decision of the Chairman in which Board Members are not in unanimous agreement with reference to the quantity-distance factor to be used in the proposed piers and wharves manual. Background information presented and final decision stated to Board Members that minimum factor of 50 will be used for the inhabited building distance tables when explosives concentrations are in ships and barges, and for explosives concentrations over 500,000 pounds that are not in ships and barges. Explosives concentrations other than those in ships and barges in quantities less than 500,000 pounds will be governed by approved standards.

Table B-1 (continued)

Reference Vol/Pp/Date	Document Identification	Fact/Datum (usually abstracted and/or paraphrased)
11 3545-6 27 Mar 58	Resume of 179th Meeting of ASESB	Item #1(c) stated that a preliminary report on development of hazard classification procedure was submitted to Board Members by Work Group Chairman. Remaining task is to determine the minimum criteria that must be met by tests to assure that the tests furnish the required data. In Item #4 the Chairman commented on the Navy Member's memo (23 Oct 57) pertaining to reconsideration of Q/D factors. This memo led to the consideration by the Board of a factor of 50 for Piers and Wharves applications. At present Chairman has no intention of reviewing the Dec 56 standards (see pp. 3546-12 and 3546-13 for further details regarding this decision).
11 3550 23 Oct 57	Memo for Chmn, ASESB from BuOrd	Memo requests reconsideration of inhabited building distances prescribed by ASESB quantity-distance rules dated 1 Dec 56. Navy member specifically requested that a vote be held at the next meeting of ASESB on whether the quantity-distance standards, wherever they reflect a factor in excess of 50, be reduced to reflect a factor of exactly 50. Response to this letter is contained in item directly above.
12 3601 21 Apr 58	Verbatim Transcript, ASESB Meeting #180	As part of another discussion on Air Force test missile tests, Board Chairman made interesting comment about missile protection. He stated that barricade doesn't provide absolute protection from blast, but will provide a great deal of protection from missiles. Quite a bit of qualitative comments such as this relating to relative blast/missile protection.

Table B-1 (continued)

Reference Vol/Pp/Date	Document Identification	Fact/Datum (usually abstracted and/or paraphrased)
12 3651-3 19 May 58	Verbatim Transcript, ASESB Meeting #181	Alternate Army Member states, in discussion relating to communication of explosions, that this concept is erroneously associated with pressures whereas the real root of the problem is controlling missiles. He states explicitly that although there are no standards for this situation, there is a hazard. Mentions qualitative magnitude of the problem but says nothing further can be stated positively because don't know exactly what fraction of the total problem it is.
12 3658-60 6 Jun 58	Memo from Chmn, ASESB to ASA (Log)	Memo is a special report of ASESB from 17 Dec 55 to 1 May 58 upon the termination of then-current Chmn, ASESB. Item relevant to explosives-safety quantity-distance include establishment of Q-D Standard of 7 Dec 56 as DOD Directive 4145.17; standards for piers and wharves to resolve divergent service positions; and appointment of work group to develop a procedure for obtaining uniform hazard classification of explosives by the Services. Also, a decision was made by the Chairman to apply a factor of fifty to explosive concentrations in ships and barges, and all other explosive concentrations over 500,000 lbs.
12 3756-7 4 Sep 58	Resume of 184th Meeting, ASESB	Item #4 related to Resolution of Service differences on proposed Piers and Wharves Manual. All items resolved except for the 50 versus 70 factor. Chairman made decision favoring a factor of 50. Various aspects of the problem discussed at great length.

Table B-1 (continued)

Reference Vol/Pp/Date	Document Identification	Fact/Datum (usually abstracted and/or paraphrased)
12 3762-91 27 Aug 58	Verbatim Transcript, ASESB Meeting #184	Long discussion held relating to factor of 70 versus 50. In course of interesting discussion following points made that seemed relevant to topic of report: (p. 3763) make strong point that must delete consideration from flying glass or else situation is completely hopeless; (p. 3767) Alternate Army Member suggests that if any mention is made of damage from fragments (not clear if he relates only to glass) that it be rather general..such as "all this guards against...is substantial structural damage."; (p. 3774) Chairman states that there is no attempt here to establish a continuum of quantity-distance from 0 to 100,000.000 lbs. Not trying to tie the present piers and wharves manual into the present quantity-distance standards; (p.3788) Air Force Member asks what factor is being used at present (when no formal standard exists). Alternate Navy Member opines that no number exists for all Services. He thinks they try to operate with a factor of 50...but probably operate at much less (safe numbers).
12 3797 18 Sep 58	Resume of 185th Meeting of ASESB	Item #1 states that resolution was reached on outstanding section of Piers and Wharves Manual. Decided that Tables in Ch. IV would be a supplement to DOD Directive 4145.17. Item #3 relates to a briefing by Secretariat Member on a recent visit by SHAPE and NATO representatives to discuss some of the concepts on which U.S. quantity-distance tables are based. Effort is being made by these organizations to develop uniform q-d tables that will be acceptable to the NATO countries. Details follow below.
12 3798- 3813 15 Sep 58	Verbatim Transcript, ASESB Meeting #185	Long discussion on first item dealing with Piers and Wharves manual. Air Force Member suggested (p. 3809) that tables pertaining to inhabited building distance should be deleted. Alternate Navy Member suggested further that any reference to storage ashore in other than ships or barge units should also be deleted. Wanted for manual to pertain strictly to piers and wharves.

Table B-1 (continued)

Reference Vol/Pp/Date	Document Identification	Fact/Datum (usually abstracted and/or paraphrased)
12 3814-3820 15 Sep 58	Verbatim Transcript, ASESB Meeting #185	Details presented on ASESB Staff participation in progress of SHAPE toward uniform quantity-distance standards for use by NATO countries. Among highlights of presentation were: (1) during 1957 meeting of storage group it was found that no uniform q-d standards existed between the NATO countries. Caused much trouble. (p. 3814). Most ASESB furnished SHAPE representatives advice and assistance relating mostly to why we did certain things with our own standards, including background reasonings. (p.3817.)
12 3821-2 24 Oct 58	Resume of ASESB Meeting #186	Item #2 mentions that Board was briefed on NATO conference on quantity-distance standards proposed by SHAPE for NATO storage of ammunition in Europe. They would not conflict with the Q-D standards used by individual countries within their own boundaries. Item 3(c) mentioned that the Q-D tables in the Piers and Wharves Manual are independent of present standards for land storage.
12 3856-7 1 Dec 58	Resume of 187th Meeting of ASESB	Item #3 relates to the Piers and Wharves Manual and mentioned that the Board planned to submit the quantity-distance requirements (Chapter IV) of the manual...at a later date as a proposed DOD Directive. Item #4 related to recent communications relative to NATO minimum quantity-distance standards for use by those countries. Some details on Item #4 follow below.
12 3877-84 24 Nov 58	Verbatim Transcript, ASESB Meeting #187	With respect to the NATO conference on quantity-distance, it was mentioned by way of background that many European countries don't have q-d standards (Board feels are) as effective as in this country. In some countries practically no standards at all exist. As a result, problem is that in some of the areas overseas there has been doubt as to the minimum criteria that could be used for the storage of ammunition. Wherever possible, the Americans have tried to use American standards, but this was not always possible. An effort is now being made by SHAPE to come up with a NATO minimum standard, that all would agree to within the overseas operational areas.

Table B-1 (continued)

Reference Vol/Pp/Date	Document Identification	Fact/Datum (usually abstracted and/or paraphrased)
12 3897-8 26 Jan 59	Resume of 188th Meeting of ASESB	Item #5 relates to NATO conference on explosives safety. It appears that the standards being prepared by the Conference, for NATO, will agree very much with U.S. standards except for: (1) distances for fixed ammunition to be based on known missile density and therefore will vary with quantity; (2) credit for barricades will be given to inhabited building distances only for quantities of explosives below or equal to 15,000 lbs; (3) explosives are grouped differently by NATO and U.S. Some details of this item follow below.
12 3900-3 19 Jan 59	Verbatim Transcript, ASESB Meeting #188	Proposed NATO standards agree very much with U.S. ones except for three points noted above. In U.S. distance for fixed ammunition are based on the known missile density and vary with quantity. In the U.S. there is a flat 1200 ft inhabited building distance. In NATO, above 15,000 lbs only unbarricaded distance is used. Short additional discussion relating to differences in rules between U.S. and NATO.
13 3992-3 25 Feb 59	Resume of 189th Meeting of ASESB	Item #4 mentions that Board Members have received memos requesting information on the internal reporting procedures of accidents and incidents within the Services, with a view toward exchange of this information between the Services. Item #9 mentions topic of proposed procedure for hazard classification. Differences will be resolved when all Service comments are received.
13 4001-8 16 Feb 59	Verbatim Transcript of Meeting #189, ASESB	Long discussion between Secretariat member and meeting attendees on rationale for choosing standards for use by Board. Consultant suggests that an interim standard could be chosen that was (probably) bigger than really necessary. Reply is that one of first difficulties of Board was they were not to put out standards unless a reasonable basis was available, which meant facts must back up all standards...Long discussion ensues. Problem seems to be whether glass breakage should be used as basis for any criterion or whether rules should be instead based exclusively on structural damage.

Table B-1 (continued)

Reference Vol/Pp/Date	Document Identification	Fact/Datum (usually abstracted and/or paraphrased)
13 4019-20 20 Mar 59	Resume of 190th Meeting of ASESB	Item #6 relates to Service comments on the proposed DOD Directive pertaining to Explosives Safety at Piers and Wharves Facilities. Issues are still to be resolved. Item #8 relates to Service comments on the proposed procedure for uniform hazard classification. Final resolution still needed.
13 4042 6 Feb 59	Memo for Chmn, ASESB from Dep for Procurement & Production (AF)	Memo relates to proposed Quantity-Distance Standards for Pier and Wharf Facilities Handling Explosives and Ammunition. Merely states Air Force concurrence with standards. No changes suggested.
13 4043-9 11 Mar 59	Memo to Chmn, ASESB from Dep ASA (Logistics)	Memo relates to above-mentioned topic and proposes changes to suggested standards. With changes proposed, Army then concurs in standard.
13 4050 8 Apr 59	Memo to Chmn, ASESB from ASN (Material)	Memo relates to above-mentioned topic and states that following comments are provided. Subject to those comments noted, the Quantity-Distance Standards forwarded are concurred in by the Navy.
13 4051-2 27 Apr 59	Resume of 191st Meeting of ASESB	Item #6(b) states that the only significant point of disagreement on hazard classification is with respect to testing of large solid propellants. Item #7 mentions that recommended Service changes (see above) are in process relating to the piers and wharves manual.
13 4056-7 17 Apr 59	Verbatim Transcript, ASESB Meeting #191	Item relates to test conducted at White Sands Missile Range. In course of discussion topic arose of minimum size of fragments that would be considered in future tests. Answer was anything over one pound. No other criterion noted.

Table B-1 (continued)

Reference Vol/Pp/Date	Document Identification	Fact/Datum (usually abstracted and/or paraphrased)
13 4070-1 29 May 59	Resume of 192nd Meeting of ASESB	Item #4 relates to the reporting procedure for explosives accidents. Each of the Board Members will inform Board and other Service Members of significant explosions and lessons learned. Item #6(a) noted that consolidated comments on piers and wharves are being sent to Board Members. Future meeting for resolution of differences.
13 4131-2 30 Jul 59	Resume of 193rd Meeting of ASESB	Item #7 notes that proposed uniform hazard classification procedure for explosives, with annex on test criteria, was approved by Board. Decided to publish as a Joint Service Technical Publications, not DOD Directive.
13 4163-4 21 Aug 59	Resume of 194th Meeting of ASESB	Item #3 states that revisions to "Quantity-Distance Separation of Explosives at Piers and Wharves" were approved by Board. Standards will be sent to DOD with a recommendation for their publication as a DOD Directive.
13 4277-8 3 Nov 59	Resume of 196th Meeting of ASESB	Item #5 mentions that the piers and wharves quantity-distance criteria were coordinated with the three Services and forwarded to DOD for promulgation as a DOD Directive. Item #6 stated that the Uniform Hazard Classification criteria was coordinated with other Services and sent for publication. Item #9 relates to preliminary reporting of Nike-Hercules tests. Relevant details relating to this latter subject appear below.

Table B-1 (continued)

Reference Vol/Pp/Date	Document Identification	Fact/Datum (usually abstracted and/or paraphrased)
13 4308-27 19 Oct 59	Verbatim Transcript, ASESB Meeting #196	Long discussion relating to an Army letter dealing with location of underground magazine. Interesting part of discussion are certain peripheral comments such as: (p. 4305) Chairman states that Board is not in the waiver business. If there is some violation of the criteria, the Service itself puts out the waiver; (p. 4300) Secretariat Member states that although the inhabited building distance doesn't protect one from a fragment, it provides more protection from fragments than otherwise (p.4310.) On this page Secretariat Member seems to be stating in American Table of Distances and also in the DOD Directive. Seems as if they want to stay below certain overpressure numbers. (pp.4326,7) Secretariat Member states that protection stated by Board deals with substantial structural damage to buildings and protection from missiles. Mentions that in particular case under consideration they should give most of their attention to heavy concrete and metal missiles. He thinks they could do this using the missile map.
13 4371 16 Nov 59	Verbatim Transcript, ASESB Meeting #197	During long discussion dealing with Nike-Hercules tests, following interesting comment made by Army representative: The inhabited building distance table which is the American Table of Distance never contemplated the elimination of the risk of flying glass or of missile hazard. Also refers to Robinson's tables as being far, far too conservative. This was this gentleman's private opinion.
13 4504 29 Apr 60	Verbatim Transcript of ASESB Meeting #200	As part of a discussion dealing with the effectiveness of dividing walls in the prevention of propagation of explosions, interesting comments made about possibility that material(s) around a donor or acceptor charge may increase the chance of fragmentation and subsequently propagation. Noteworthy part of discussion by Secretariat Member is the generally qualitative way in which such comments were made at this time in the history of the Board.

Table B-1 (continued)

Reference Vol/Pp/Date	Document Identification	Fact/Datum (usually abstracted and/or paraphrased)
14 4528-9 7 Jun 60	Resume of 201st Meeting of ASESB	Only item of relevance relates to the Work Group on Revision of Hazard Classes. Group agreed that a revision of the existing system of classes should be made so a uniform set in classes can be used by all Services. Work will be done "in session."
14 4558-9 14 Sep 60	Resume of 202nd Meeting of ASESB	Problems involved in siting of NATO ammunition storage facilities in some NATO countries were discussed. One of the problems arose due to basic difference in the safety distance requirement of U.S. and European countries. Second problem caused by requirements change since siting plans were developed. Second item of interest at Meeting (#6) related to Work Group for Revision of Hazard Classes. Details of both these items follow below.
14 4563 15 Aug 60	Verbatim Trans. cript of Board Meeting #202	In discussion dealing with difficulty of siting some U.S. storage facilities in Germany (mostly), it is mentioned that German regulation take into consideration a certain fragment density as well as blast. They have taken as a basis for this minimum of one fragment per 600 sq ft of area and the fragment having an energy of 58 pounds at the time of impact. Anything smaller than this they do not concern themselves with. Board Secretariat Member mentions he was asked to see if there was any possible way to develop a table which would indicate at what distance you would get the fragment concentration and secondly where you would expect an overpressure of approximately 0.75 lb/in^2. No resolution obtained.
14 4572-7 15 Aug 60	Same as above	During discussion about Work Group on Revision of Hazard Classes it was mentioned that Group was proposing a new schedule of quantity-distance classes. But they did not expect radical changes, nor would there be any major change in the spread of distance requirements. Some adjustments in definitions...expected. Expected that 12 classes would be reduced to 7. Main interest is in trying to determine the class an explosive should fit into; another is to actually determine the hazard from any given explosion.

Table B-1 (continued)

Reference Vol/Pp/Date	Document Identification	Fact/Datum (usually abstracted and/or paraphrased)
14 4694-5 9 Nov 60	Resume of 203rd Meeting of ASESB	Two items of interest, #4 and #6. Former dealt with problems involved in siting of NATO ammo storage facilities. Resolution obtained using distances specified in the DOD Directive. Latter item related to a report on Hazard Class Revision project which resulted in the submission of a proposed DOD Directive. Details follow below from Verbatim Transcript.
14 4711-2 17 Oct 60	Verbatim Transcript, ASESB, Meeting #203	In discussion relating to siting of NATO ammunition facilities it was mentioned that the German Government has a fixed minimum distance for the siting of any type of mass detonating ammunition or explosives. This is based on an overpressure as well as a missile density.
14 4715-6 17 Oct 60	Same as above	In discussion item relating to work group on revision of hazard classes, Chairman ASESB mentions that revisions may be far-reaching. This is due in large part by the introduction of a lot of (ammunition) items which were not in existence at the time the present hazard standards were drawn up.
14 4733-4 3 Jan 61	Resume of 204th Meeting of ASESB	Item #4 indicated that the Work Group on Revision of Hazard Classes decided at a recent meeting on a preliminary draft of DOD Directive. Prior to formal submission they will add material relating to toxic, radiological, and biological hazards.
14 4756-8 6 Mar 61	Resume of 205th Meeting of ASESB	Item #3 indicated that Chairman of the Work Group on Minimum Test Criteria for Determination of Hazard Classification had received comments from interested parties and the document would be written to include such comments. Most of the tests which had been proposed (for inclusion into document) will be included therein.

Table B-1 (continued)

Reference Vol/Pp/Date	Document Identification	Fact/Datum (usually abstracted and/or paraphrased)
14 4866-8 22 May 61	Resume of 206th Meeting of ASESB	Item #2 related to a NATO meeting of the Group of Experts on Ammunition Storage. One item on agenda was idea of raising present weight limitations (and making other revisions) to reduce the restrictions on the shipment of military explosives. Item #4 related to the finalization of proposed test criteria by the group to develop minimum test criteria to determine hazard characteristics of solid propellants. Item #9 related to a presentation that Army Member requested Board Staff give on the differences in the DOD Explosives Quantity-Distance requirements and those in the American Table of Distances. More below on #9.
14 4891-3 15 May 61	Verbatim Transcript, ASESB Meeting #206	With respect to the presentation requested from Board Staff on differences between ATD and DOD ESQD, main question relates to storage of mass-detonating explosives. ASESB Alternate Navy Member says that reappraisal of 1958 provided most of this information. Board consultant summarizes situation in saying that ATD is law in about 35 states and the main question is whether or not to try and get the various laws changed to meet the changed table. No firm decision made about presentation.
14 4899- 4900 26 Jul 61	Resume of 207th Meeting of ASESB	Item #3 related to current status of work group to develop minimum test criteria to determine hazard characteristics of solid propellants. Tests should be shortly completed. Secretariat Member presents proposed quantity-distance relationships to be applied between interservice tactical and support facilities where neither is a tenant of the other. Action on proposed relationships was deferred for more study.

Table B-1 (continued)

Reference Vol/Pp/Date	Document Identification	Fact/Datum (usually abstracted and/or paraphrased)
14 4934-5 25 Sep 61	Resume of 208th Meeting of ASESB	Item #3 gives present status of activities of work group for hazard class revision..Item #6 relates to discussion of application of Board standards pertaining to inter-Service support vs. tactical facilities. Board Members indicated they would support the use of a common safety zone between inter-service facilities.
14 4970-3 1 Sep 61	Ltr from Chmn, ASESB (no recipient listed)	Letter relates to exchange of information covering accidents involving propellants and the collection and dissemination of such information. Letter relates to a program whereby the ASESB would collect and maintain such information and solicits information about whether recipients are interested in participating in such a program. Sample report shown.
14 4977a-c 7 Nov 61	Ltr from AFIIS-B Air Force Board Member to Chmn, ASESB	Letter relates to ASESB proposal on application of Board standards between inter-service support and tactical facilities. Last item is of note wherein Air Force mentions that main consideration for siting tactical facilities should not be inhabited building separation.
14 4978-9 24 Nov 61	Resume of 209th Meeting of ASESB	Item #3 related to the work group for the revision of ammunition hazard classes. Final draft of proposed DOD Directive submitted containing work group's recommendations for a new set of ammunition hazard classes. Item #4 mentions that work group on minimum test criteria for solid propellants had completed its document. Ready for service coordination. Additional details of this meeting appear below.
14 4989 20 Nov 61	Verbatim Transcript, ASESB Meeting #209	The work group on revision of ammunition hazard classes draft revision of the hazard classification system includes a total of several classes of ordinary fire hazard and explosives ammunition and an eighth class to cover those items containing toxic, biological, or radiological chemical agents. Awaiting comments, but these are expected to be affirmative.

Table B-1 (continued)

Reference Vol/Pp/Date	Document Identification	Fact/Datum (usually abstracted and/or paraphrased)
14 5018-9 20 Nov 61	Same as above	ASESB Secretariat Member mentions that in certain classes of explosives or ammunition there is specification of the type of damage or what risk one is willing to take (e.g., classes 1,2,10). However, he further indicates that in none of the rest of the tables has the Board indicated the actual hazard one was willing to accept. It is evidently left up to the individual. Most fragments in (what was then) Class 4 were expected to fall within 1200 ft. He mentions that at an incident he witnessed (34,000 rounds of 3-in ammunition) at 1800 and 1900 ft he could not see the ground. He stated they went out to 3900 ft (even though the regulation said 1200 ft). The 1200 ft (he states further) was developed from 320 rounds of 3-in ammunition being detonated at Aberdeen. He thinks that that is the main problem being discussed (with respect to the specific item of munition under discussion), that if some figure of density were available the problem could be solved, but under the present regulations this did not seem possible to him. Chairman states that purpose of meeting is only classification of one item. Subject dropped.
15 5215-6 2 Nov 61	Ltr from Chmn, ASESB to Members, ASESB	Letter reports on ASESB work group for revision of ammunition hazard classes. Work group recommends new classes to increase uniformity in assignment to classes by Military Services; for (in some instances) storage of materials with smaller land requirements for safety zones than is now permissible; assignment of each item to hazard class based on experience or tests rather than end use or other characteristics; and realistic classification in the assignment to new items that did not exist when the present classes were established.

Table B-1 (continued)

Reference Vol/Pp/Date	Document Identification	Fact/Datum (usually abstracted and/or paraphrased)
15 5293-5 6 Mar 62	Resume of 210th Meeting of ASESB	Major item related to comments on desirable safety distances for large missile motors and weapons system installations where the hazard from ...debris may be paramount over the blast hazard from actual explosions. Board contemplated the creation of a work group (see below) to study the hazard from fragments and debris from such missiles/weapon systems to determine what is necessary in the way of safety distances to protect against these hazards for which presently there are no scientifically established criteria. Long discussion ensued.
15 5379-81 13 Mar 62	Memo for Members, ASESB from Chmn, ASESB	Memo describes background and anticipated efforts of the proposed work group on fragmentation hazards from large missiles and weapon systems. Mentions in para. 2 of memo that current applicable quantity-distance tables are aimed primarily at providing reasonable protection to life and property from the blast hazard characteristics of mass-detonatating ammunition and explosives, and from the fragment hazards of non-mass-detonating ammunition, neither of which defines the risks taken with these large weapon systems when the fragment and debris hazards may be significantly greater than the blast hazard alone. There are presently no nationally recognized standards available which give full consideration to the damage which may be caused by secondary fragments from structures and equipment and from showers of burning material...Determination needs to be made as to what constitutes a hazardous fragment in terms of size, velocity, and range, and the density of such hazardous fragments which may be accepted in any given area surrounding an explosives incident.

Table B-1 (continued)

Reference Vol/Pp/Date	Document Identification	Fact/Datum (usually abstracted and/or paraphrased)
15 5382-3 23 Apr 62	Memo for Dist. from Chmn, ASESB	Memo lists appointees to work group to study fragmentation distance requirements and hazards for large missile and weapon systems. Memo lists purposes of work group (see directly above) including study of information available on subject, evaluating concentration of fragments that might be considered acceptable, and preparing and recommending coordinated procedures for obtaining adequate test data on a continuing basis for...subsequently developed weapons or weapon systems which present an unusual fragmentation hazard...due to being placed in protective construction...which might make the fragment and dispersal problem paramount over blast.
15 5433a-b 10 Apr 62	Resume of 212th Meeting of ASESB	Main item of interest at meeting related to decision on quantity distance to be recommended for Minuteman configuration. Members reviewed Air Force presentation and decided that the minimum distance ...considered acceptable is 1200 ft between silos and inhabited buildings. A more desirable distance figure would be 1570 ft which is the barricaded distance required to give protection against involvement of the propellant charge (full) in a detonation.
15 5468 5 Apr 62	Memo for Members, ASESB from Chmn, ASESB	Memo relates to quantity-distance standards for small quantity of mass-detonating explosives. Relates to values of explosives below present 50-pound limit and presents suggested table for comments (table breaks up 50 pounds into 8 subdivisions).

Table B-1 (continued)

Reference Vol/Pp/Date	Document Identification	Fact/Datum (usually abstracted and/or paraphrased)
16 5478 18 Apr 62	Verbatim Transcript, ASESB Meeting #213	In course of meeting topic dealing with public highway distances in connection with Minuteman, review requested of public highway distances. Air Force Member pointed out that quantity-distance standards generally provide for application of 60% factor to inhabited building distances. Agreement seems to be reached that Board intends to apply 60% factor to 1200 ft distance established for Minuteman.
16 5480 17 Apr 62	Ltr to Chmn, ASESB from HQ, USAF, (AFIIS)	Ltr relates to siting criteria for hardened and dispersed weapon system 133A (Minuteman). Ltr requests Board to interpret ruling as it pertains to safety distances involving public highways and railways.
16 5481 23 Apr 62	Ltr from Chmn, ASESB to HQ, USAF, (AFIIS-B)	Ltr contains Board response to topic above. States that 60% is acceptable as suitable public railway and highway distance. Interesting comment added that in practical application of the criteria used, it is considered appropriate for good judgment to be applied in various instances since the figures reflected are minimal.
16 5519-21 No date given	Paper relating to Minuteman siting	Paper is interesting in that it indicates the difference in safety-distance criteria recommended by ASESB and the USAF. Included in paper are a comparison of ASESB studies of incidents that provided tentative data on fragmentation compared to Air Force results of estimates of Minuteman silo fragmentation.
16 5531b-d No date listed	Paper dealing with ICBM siting	Interesting paper dealing with investigation of safety distance calculated for Minuteman missiles and controversy relating thereto. Questions and answers given regarding ASESB's involvement in this controversy and their duties under their charter.

Table B-1 (continued)

Reference Vol/Pp/Date	Document Identification	Fact/Datum (usually abstracted and/or paraphrased)
16 5538-40 30 Jul 62	Resume of 215th Meeting of ASESB	Two items seem of interest: item #3 indicates that the Board was advised of agreement on extrapolation of inhabited building quantity-distance standards for small amounts of explosive between 0-50 lbs where fragmentation hazards can be prevented or controlled. Table approved as policy for Services to be issued at later date. Item #8 regards discussion held about non-uniformity in Service regulations wherein each of Services have like situations and different standards have been applied to these situations. Agree to resolve these differences at regular monthly meetings, item by item.
16 5563-67 16 Jul 62	Verbatim Transcript ASESB Meeting #215	Discussion on these pages between Alt Navy Member and Chairman of Board. Alt Navy Member states that he thinks Air Force and Navy are pretty close to agreement on implementation of Standards, except for combatant vessels and he thinks combatant vessels and aircraft are excluded from the standards at present. States that he has no objection to requiring making standards applicable to piers where ammunition is loaded onto combatant vessels, but not so if ammunition is in magazines. Chairman seems to voice agreement (p. 5566) to idea of excluding combat ships where there are no ammunition operations going on. And they will not be excluded where they are handling ammunition.
16 5574a 20 Mar 62	Ltr from Navy Member to Chmn, ASESB	Letter discusses Navy Member's view of proposed policy guide for ASESB Staff Members and indicates areas in which he does not concur. Main item is that he thinks that combat configured ships are not now, and cannot be made subject to quantity-distance regulations.

Table B-1 (continued)

Reference Vol/Pp/Date	Document Identification	Fact/Datum (usually abstracted and/or paraphrased)
16 5574b-c 31 May 62	Ltr from Air Force Member to Chmn, ASESB	Ltr relates also (as above one) to proposed policy guide for ASESB Staff Members. Letter recommends that policy relating to whether or not combat configured ships are subject to quantity-distance regulations be further clarified prior to deletion or approval at subsequent Board Meeting.
16 5880-3 9 Oct 62	Resume of 216th Meeting of ASESB	Main item of interest summarized results of two fragmentation tests as part of the work of the Fragmentation Work Group. In each instance the fragments of the motor cases, unburned propellant, etc...were heavily concentrated between 500 and 1400 ft from the site. Maximum range of fragments from tests was slightly in excess of 3,000 ft.
16 5913 24 Sep 62	Verbatim Transcript, ASESB Meeting #216	As part of discussion on present status of quantity-distance tables for large solid propellant rocket motors, Secretariat Member mentions that he would expect quantity-distance formula to fail in the lower value ranges...where the high speed fragments can actually penetrate ...and he mentions that he contemplates that at these values there would be a minimum separation distance. He states you won't be able to go down (using quantity-distance rules) indefinitely.
17 6121-24 11 Feb 63	Resume of 218th Meeting of ASESB	Two items of interest noted. Item #5: Navy and Air Force Members indicated that present classification systems in use do not adequately meet their requirements and that it may be necessary for their Departments to prepare their own (ammunition hazard classes) if agreement can't be reached on a uniform system. Item #9: At an earlier meeting Board discussed its responsibility in the area of waivers from DOD standards granted by a given Service. Reply from AFJAG office to Air Force Member's letter was read into minutes.

Table B-1 (continued)

Reference Vol/Pp/Date	Document Identification	Fact/Datum (usually abstracted and/or paraphrased)
17 6247 16 Nov 62	Letter to Chmn, ASESB from Dept of the Air Force, (AFIIS)	Letter summarizes legal interpretation of the Armed Services Explosives Safety Board Charter and Responsibilities and states: (a)...members would not be jointly responsible in the event a hazardous condition arising from a waiver contributes to loss of life or property; and (b) waivers...of the Board are granted by the particular military department and are not within the strict jurisdiction of the Board.
17 6278-80 8 Apr 63	Resume of 219th Meeting of ASESB	In Item #4 Board was advised of the potentially hazardous situation at the Naval Ammunition Depot, Concord, Calif. as it pertains to the inadequate safety zone with respect to that town. Letter will be forwarded to SECDEF advising him of this situation.
17 6307-8 26 Mar 63	Verbatim Transcript, ASESB Meeting #219	Chairman states what approach is with respect to evaluation by Board Staff of safety zone at NAD, Concord, Calif. He says that approach is ...not to put any Service on the spot...but solely at precluding any higher authority from (at some future time) says to Board Members "you did not keep me advised of hazardous conditions of which you were aware and apprised."
17 6452-3 25 Jul 63	Resume of 221st Meeting of ASESB	Two items of interest to subject study: Item #2 indicates that ASD (I+L) will consider that he has been officially notified if a copy of the report to BUNAVWEPS concerning any undue hazard is furnished his office. This is in regard to notification under the Charter of hazardous situations revealed during explosives safety surveys; Item #6 indicates that Board was advised that the Hazard Class Revision Work Group completed final revision of proposed DOD Instruction establishing new ammunition hazard classes.

Table B-1 (continued)

Reference Vol/Pp/Date	Document Identification	Fact/Datum (usually abstracted and/or paraphrased)
17 6560-17 6 Aug 63	Memo for Members AFESB from Chmn AFESB	Memo relates to revision of ammunition hazard classes and contains, as an enclosure, a draft entitled: "Department of Defense Hazard Classes, Quantity Limitations and Quantity-Distance Standards for the Manufacturing, Handling and Storage of Explosives, Ammunition and Chemical, Bacteriological and Radiological (CBR) Agents." Covering letter for the document enclosed states that the proposed DOD issuance revising ammunition hazard classifications establishes a uniform system which can be used...by all three Military Departments. It is said to provide adequate flexibility for...specialized requirements which may exist in the manufacturing or military activities of the individual departments. Purpose of revised instruction was to achieve greater clarity and uniformity in the assignment of hazard classification.
18 6527-8 30 Sep 63	Resume of 222nd Meeting of ASESB	Main item relevant to subject topic relates to briefing presented to Board of proposed revision of ammunition quantity-distance hazard classes. Final draft of proposed DOD Instruction submitted to Board Members. Other items of some note from Meeting Verbatim Transcripts presented below.
18 6529-99 3 Sep 63	Verbatim Transcript, ASESB Meeting #222	Two items of note: (1) on p. 6533 it seemed of interest, on a report dealing with the work group to revise DOD Directive 4145.1 ("Explosive Safety Standards for Airfields, Lighter-Than-Air Facilities, Heliports and Seadromes") that the topic arose (unresolved) of whether or not combat aircraft are going to be specifically included in any quantity-distance rules. This parallels (I believe) question of whether Navy combatant ships are to also be so included in rules; (2) on p. 6534-43 discussion held regarding hazard class revision. No definite conclusions on technical issues reached.

Table B-1 (continued)

Reference Vol/Pp/Date	Document Identification	Fact/Datum (usually abstracted and/or paraphrased)
18 6617-31 10 Sep 63	Memo for Members, AFESB from Chmn, AFESB	Memo presents, as inclosure, proposed revision of ammunition hazard classes. Full title is "Department of Defens[illegible]zard Classes, Quantity-Distance Standards for the Manufactu[illegible] Handling and Storage of Explosives, Ammunition and Chemical, Bacteriological and Radiological (CBR) Agents."
18 6677-8 3 Dec 63	Resume of 223rd Meeting of AFESB	Item #8 seemed of most interest to this study, vis., the Board was advised that the Work Group to Study Fragmentation Distance Requirements and Hazards for Large Missile and Weapon Systems agreed on interim standards for recommendation to the Services pending the development of additional data from test and accident studies.
18 6717-20 20 Nov 63	Verbatim Transcript, ASESB Meeting #223	Interesting point brought up for clarification by Alt. Army Member. Relates to the dollar value of new construction and modification of old...requiring submittal of plans to Board. ASESB Staff Member replies that...no provision in Act of Congress which established the Board which gave the Board authority to specify dollar limitations with regard to explosives safety. Point subsequently elaborated upon.
18 6728-9 21 Nov 63	Ltr from Chmn, AFESB to Chief, BuNavWpns	Letter deals with report of explosives safety of U.S. Naval Ammunition Depot, St. Juliens Creek, Va. Mentions that this is one of older depots and, due to location, cannot comply with published safety criteria. Lists overall potential hazards at depot.
18 6755 20 Dec 63	Ltr to Chief, BuNavWpns from Chmn, DDESB	Mentions that tender pier...used approximately 2-3 times per year for ammunition handling...may result in serious loss of life and property ...but pier quantity-distance requirements have been waived...as this is only location available.

Table B-1 (continued)

Reference Vol/Pp/Date	Document Identification	Fact/Datum (usually abstracted and/or paraphrased)
18 6757-8 15 Jan 64	Resume of 244th Meeting of AFESB	Board advised that comments were received from all Members of Board with respect to a proposed DOD Instruction on Hazard Class Revision. Instruction will be presented to OSD as soon as possible.
18 6801-2 28 Jan 64	Memo for ASD (L+I) from Chmn, ASESB	Memo deals with ASESB reporting procedure to the Secretaries of the Military Departments. Mentions that following completion of an explosives safety survey of a DOD Installation, Board will forward a copy of reports selecting serious hazards endangering life and property to Secretary of appropriate Military Departme[illegible].
18 6896 19 Feb 64	Verbatim Transcript of ASESB Meeting #225	Interesting comment made by Navy Member of Board [illegible] interchange with others at Meeting. He states that all Board [illegible] to do is say that quantity-distance will be followed...and then [illegible] up to individual Service whether or not to waiver such a requirement. That is individual Services's responsibility.
19 6939-40 3 Apr 64	Resume of 226th Meeting of ASESB	Only item relevant to subject study related to Board's review of previous guidance with respect to the application of DOD Directive 4145.17 to barricaded situations particularly as regards the height of barricades for intraline distance applications. The Board unanimously passed a motion to cancel the previous Board interpretation (at 219th Meeting)...and to await results of barricade literature search prior to making any additional interpretation of subject directive.

Table B-1 (continued)

Reference Vol/Pp/Date	Document Identification	Fact/Datum (usually abstracted and/or paraphrased)
19 7224-6 23 Sep 64	Ltr to Member, barricade study team from Chmn, ASEB	Letter primarily of interest due to enclosure for Member, barricade study team, titled "Outline for Barricade Effectiveness Study." Outline says that three-man study team will work for 90-day period on a literature search regarding tests, accidental explosions, and pertinent physical phenomena concerned with explosions to determine effectiveness of barricades as a positive method of protection from the effects of explosions and to assure that barricades are adequately serving their purpose. Sources of information are (1) ASESB Technical Files (historical file of explosion reports, test reports, technical library which includes House Doc 199, History of Explosions, Explosion Log, and DOD Directives and Regulations), (2) Military Sources (AMC Safety Office, BuWeps Code F-121), USAF, DIG, Norton AFB), and (3) Industry sources (list attached). Interesting compared to current 1-man 6-month study of origin of ESQD rules.
19 7233-5 22 Oct 64	Resume of 229th Meeting of ASESB	Board reviewed extensively content of DOD Directive 4145.18 "Quantity-Distance Standards for Pier and Wharf Facilities Handling Explosives and Ammunition." In particular the questions having to do with the applicability of this Directive to combatant ships. At motion of Navy Member, Board approved a change on Directive which makes it inapplicable to combatant ships. Change approved was A. These quantity-distance standards apply to the separation of piers and wharves and associated facilities within the boundaries of Armed Services establishments, or piers and wharves and associated facilities used by the Armed Services, at which mass-detonating explosives or ammunition may be handled, or which may be present as cargo in ships holds....."....and then added.... "These standards are inapplicable to ammunition or explosives stowed in ships' magazines and intended for the service of the shipboard armament or aircraft. They do, however, apply to the loading, off-loading, stowing, or shifting of such ammunition or explosives." A report was also made on the status of the appointment of a literature search review team to study the problem of effectiveness of barricades in accordance with ASD(I&L) memo of 10 Jun 64.

Table B-1 (continued)

Reference Vol/Pp/Date	Document Identification	Fact/Datum (usually abstracted and/or paraphrased)
20 7429-30 2 Nov 64	Memo for Members, AFESB FROM Chmn, AFESB	Memo relates to DOD Directive 4145.18, 23 Nov 59, "Quality-Distance Standards for Pier and Wharf Facilities Handling Explosives and Ammunition." Memo details modifications agreed upon relating to subject Directive at 229th Meeting, particularly with respect to its application to combatant ships. Upon a motion by Navy Member, approved subject change to Directive which would make it inapplicable to combatant ships. Board will recommend to ASD(I+L) that change be made as follows: (in SECTION I. Application) (a) standards apply to mass-detonating explosives or ammunition which may be present in ships' holds...(and) These standards are not applicable to ammunition or explosives stowed in ships' magazines and intended for the service of the shipboard armament or aircraft. They do, however, apply to the loading, offloading, stowing or shifting of such ammunition or explosives.

Table B-1 (continued)

Reference Vol/Pp/Date	Document Identification	Fact/Datum (usually abstracted and/or paraphrased)
19 7236-90 8 Sep 58	Verbatim Transcript, ASESB Meeting #229	Long discussion here discussing everything from board general philosophy down to specific details relating to content and subsequent modification of DOD Directive 4145.18. Background extensively detailed. Of interest on p. 7265 is statement by Alternate Army Member that (in his personal opinion) it has never been the intent of the Board to establish quantity-distance safety standards that would impare the operational capability of the three Services.
19 7320-2 27 Aug 64	Ltr from Chief, BuNavWeps to Chmn, ASESB	Letter discusses applicability of DOD Directive 4145.18 and states Navy's contention that subject directive is not, and should not be considered applicable to the stowage of ammunition aboard combatant ships of the Navy. Supporting information for Navy's position given from OPNAV Instruction 8023.10 and "Safety Manual for Siting, Constructing and Equipping Pier and Wharf Facilities for Handling Explosives and Ammunition" (Green Book), ASESB, Sep 58.
20 7371-3 1 Dec 64	Resume of 230th Meeting of ASESB	Highlights of Meeting related to subject project included: (item #2) Members coordinated on a letter to the Service Secretaries regarding proposed change to Directive adopted at 229th Meeting regarding "Safety Manual for the Siting, Constructing, and Equipping Pier and Wharf Facilities for Handling Explosives and Ammunition:" (item #5a) Board agreed that determination of quantity-distance table to be used (magazine, intraline, inhabited building) should be based upon the nature of the operations being performed at both the site consideration and relationship to adjacent facilities; (item #5b) Board agreed on a revision to Section IV of DOD Directive 4145.17.

Table B-1 (continued)

Reference Vol/Pp/Date	Document Identification	Fact/Datum (usually abstracted and/or paraphrased)
20 7520-23 12 Jan 65	Verbatim Transcript, ASESB Mtg. #231	During discussion of a revised proposed test for the Nike Sprint by representatives of the NIKE-X Project Office, Secretariat Member stated that it was his personal opinion that the (quantity-distance) chart does reflect 1.3 as the maximum predicted peak overpressure from situations now authorized by the table. At that point you have no danger of incipient collapse of structures. Targets which have been exposed to the blast and are not then dangerous from the standpoint of going in and examining them, doing repair work, etc. Chairman asked whether Air Force or Navy Members had any objection to the acceptance of 1.3 psi. Board Secretariat Member was asked about figure of 0.55 psi (used previously) and he replied that it is the approximate level for pressure that you would predict from the use of unbarricaded inhabited building distance tables. This would be a suitable figure by the maximum distance ever required. You would still have (with 0.55 psi) window breakage, door frames being pulled out, sheathing pulled off, but we would not expect roof rafters to break or floor joists to break. But flying fragments would exceed this distance; the majority of fragments would fall within the unbarricaded inhabited building distance but we would get fragments flying beyond. Secretariat Member continues that 1.3 psi is that which you would predict from the American Table of Distances for all values and at the lower levels we have the same protection as the ATD. It is stated that in general Board provides for much greater protection in amounts over 100,000 pounds and it decreases as we get lower than 100,000 pounds, the barricaded situation. Secretariat Member states that he does not feel that the 1.3 psi figure would establish a precedent if that amount is limited to explosive incidents of the character that are now discussing with conventional types of explosives and ammo in amounts less than 20,000 pounds net weight. He cautions, however, not to extend this 1.3 psi figure blindly upward. It must be limited to small amounts.

Table B-1 (continued)

Reference Vol/Pp/Date	Document Identification	Fact/Datum (usually abstracted and/or paraphrased)
20 7612-3 22 Mar 65	Resume of 232nd Meeting of ASESB	Most interesting comment related to subject topic dealing with the report of the Barricade Study Group (item #5b) assigned to the Board by ASD(I+L). Report is currently awaiting formal comment from Board Members, but consensus of Member's opinion as expressed at Meeting was that it is preliminary and should not be fully endorsed by Board without considerable additional study. See item directly below.
20 7628-30 3 Mar 65	Verbatim Transcript, ASESB Meeting #232	These pages deal with the Barricade Study Group and presents interesting view of how Board approval or disapproval is won for any given change in standards or procedures. Board Chairman summarizes views of all that they had hopes that report would raise enough questions... to establish future direction regarding benefit of barricades. But report is still controversial even after this long a time, so if testing is the course, they now have a vehicle to support their position.
20 7660-1 26 Mar 65	Memo for ASD(P&I) from Chmn, ASESB	This memo and one on subsequent page (7661) deal with the review of agreements and/or contracts for compliance with DOD explosives safety requirements. Memo suggests that ASESB methodically review those agreements and/or contracts that may contain provisions pertaining to explosives which are contrary to the best interest of the DOD. Subsequent to such review and evalution the SECDEF would be advised regarding undue risks being assumed, if any, and recommended corrective measures to be taken.
20 7677-9 17 June 65	Resume of 233rd Meeting of ASESB	Only item #7 seemed of any relevance to subject study. This related to recent report of Barricade Study Team, "Evaluation of the Effectiveness of Barricades from the Results of Accidental Explosions," wherein it was agreed that the comments should be forwarded to the study team for their review. At present time the Board Members are in agreement that this report should not be given widespread distribution.

Table B-1 (continued)

Reference Vol/Pp/Date	Document Identification	Fact/Datum (usually abstracted and/or paraphrased)
20 7796-7 7 Apr 65	Memo for Chmn, ASESB from Navy Member, ASESB	Letter relates to report of barricade literature search "Evaluation of effectiveness of barricades from the results of accidental explosions." Recommends against publication for several reasons including lack of any study of "close-in" benefits of barricades with respect to fragment protection at intraline distance or less. Other objection related to missiles (item (c)) states that report considers only maximum distance at which missiles were found...and gives no consideration to distance to which most missiles are projected...which has long been the criterion used for providing missile protection.
20 7798-7802 9 Apr 65	Memo for Chmn, ASESB, from Army Member, ASESB	Letter relates to report cited directly above. Army Member, in reviewing report, made following comments relevant to missile problem: Army says what they are really interested in, with regard to maximum missile distances, is the percentage of fragments falling within barricaded and unbarricaded inhabited building distances. Maximum missile distance is not the governing factor, since present definition of inhabited building distance does not provide 100% protection against fragments. Army recommended that Board not release paper.
20 7803-5 19 Apr 65	Memo for Chmn, ASESB from AFIIS, Department of the Air Force, HQ USAF	Memo relates to report cited above, to which all Services are responding. With respect to the fragment problem, memo states that barricades do absorb low angle, high velocity fragments, thus reducing the number of fragments within the area surrounding the detonation when the integrity of the barricade is not appreciably degraded by the blast and fragment attack. Although the study included data and conclusions on maximum range of fragments, it does not adequately explore the phenomena of absorption and reduction which is also required in evaluating the effectiveness of barricades. Recommended that draft should be considered again before further distribution.

Table B-1 (continued)

Reference Vol/Pp/Date	Document Identification	Fact/Datum (usually abstracted and/or paraphrased)
20 7806-11 18 Jun 65	Ltr to Chmn, ASESB from Barricade, Literature Search Study Team	Letter relates to comments by Members of ASESB on subject report and includes 4-page attachment discussing those comments. Main item relating to fragments is in Par. 1a (relating to ref. 1a) on p. 7808 and states that the team found no valid approach for studying close-in benefits of barricades with respect to fragments by comparing data from accidental explosions. Due to amount of data being limited and nature of the data. In most cases, the data consisted only of a statement that missiles were thick or dense to some distance, a very subjective and non-quantitative statement not useful in analysis. In those cases where missile maps were found, they generally do not list all of the missiles, especially the concrete fragments, for example.
20 7836-40 21 Jul 65	Ltr to Chmn, ASESB from USAMC	Letter relates to barricade effectiveness tests. Mentions that missile mapes of each test should be prepared to evaluate the effectiveness of barricades in reducing concentrations of missiles.
20 7848-53 2 Jul 65	Three Memos from Chmn, ASESB to Members, ASESB	These three memos, one for each Service Member of the ASESB, relate to comments by ASESB members on report of barricade literature search study team "Evaluation of the Effectiveness of Barricades from the Results of Accidental Explosion." Memo (identical in every case) concludes that draft report should be given more study. Further stated that much of material in report cannot be stated definitively to everyone's satisfaction without some deliberate tests. Proposals will be forwarded to Members for the development of an initial effort in this regard.
21 7867-9 3 Sep 65	Resume of 235th Meeting of ASESB	Primary item somewhat related to subject topic deals with a preliminary review and discussion held on actions taken with respect to the barricade study team who are to suggest revisions to current barricade regulations.

Table B-1 (continued)

Reference Vol/Pp/Date	Document Identification	Fact/Datum (usually abstracted and/or paraphrased)
21 7969-70 19 Aug 65	Memo for ASD(I+L) from Chmn, ASESB	Memo deals with potentially serious explosives safety conditions at U.S. Naval Magazine, Subic Bay, P.I. Pier and other facilities are not of adequate capacity. One of several letters and memoranda (see below) in this time frame relating to violations, especially Navy.
21 7972 1 Sep 65	Memo for ASD(I+L) from Chmn, ASESB	Mentions that this facility has been operating under waiver for prolonged period and is expected to continue to do so. But feels that ASD(I+L) should be informed of hazardous conditions at given location. Facility is Sub Base, New London, CT.
21 7963 1 Sep 65	Memo for ASD(I+L) from Chmn, ASESB	Reports on explosives safety survey of Pearl Harbor Complex, Hawaii. Mentions that safety violations noted are minimized to maximum extent possible, certified by Navy as being an operational necessity, and will be eliminated following requested construction.
21 7988-9 24 Sep 65	Resume of 236th Meeting of ASESB	Two items of significance to subject project relate to (1) revision of Section IV, DOD Directive 4145.17 "Quantity-Distance Standards for Manufacturing, Handling, and Storage of Mass-Detonating Explosives and Ammunition." Proposed change, with slight modification, is shown in ASESB memo for the Board Members dated 15 Jun 65. Also, to (2) the revised draft of the report of the team studying the effect of barricades on the quantity-distance rules.

Table B-1 (continued)

Reference Vol/Pp/Date	Document Identification	Fact/Datum (usually abstracted and/or paraphrased)
21 7990 8043 7 Sep 65	Verbatim Transcript of ASESB Meeting No. 236	Two items of special interest noted in these transcripts (but not mentioned in the Resume of the Meeting, above) are noted here, along with appropriate page numbers: (1) 8033-5 On these pages took place a short discussion related to an item in DOD Directive 4145.17 in the application of quantity-distance standards for mass detonating explosives in the lower range. On p. 16 of the Directive under V B 1, third sentence reads "These distances, which are based on damage from blast effects, also provide a high degree of protection from missiles except for small quantities where the missile hazard is more severe than the blast hazard." Difficulty cited by Secretariat Member is definition of "small." No answer expected at meeting, matter of judgment right now, in some cases Board doesn't know which way to go. Chairman says that topic will be an agenda item at the next meeting. Mentions that problem arose when got into smaller and smaller weapon systems located in some environments where missiles are a greater hazard than the blast. When asked what they would recommend, Secretariat replied "1200 ft." (2) (p. 8041-2) This second item was raised by Air Force Member and suggests a general survey and/or statement of the basis of the criteria. ASESB Secretariat Member suggests that what is needed is relationship between present day test and accident data to the quantity-distance tables.
21 8043a-b* 10 Aug 65 (REPRO #3)	Ltr to Chmn, ASESB from Army Member, ASESB	Letter relates to proposed revision to Section IV, Inclosure 1, Dod Directive 4145.17. Letter contains interesting background and philosophical notes relating to explosives safety. Mentions that basic precept is to limit exposure of a minimum number of personnel, for a minimum time, to a minimum amount of hazardous material. Another important consideration is the reduction of potential for loss of facilities and material. The required separation provides a high degree of protection for personnel and facilities...from blast effects... plus missile effects except for small quantities where the missile hazard may be more severe than the blast hazard.

* Material reproduced in Appendix D.

Table B-1 (continued)

Reference Vol/Pp/Date	Document Identification	Fact/Datum (usually abstracted and/or paraphrased)
21 8044-5* 7 Sep 65 (REPRO #4)	Memo for Members, ASESB from Chmn, ASESB	Memo relates to proper application of paragraph V B DOD Directive 4145.17, (Incl 1) December 7, 1956. Problem relates to determination of distance at which fragment hazard becomes greater than the blast hazard, in applying provisions of the subject paragraph. Directive states that....distances provide a high degree of protection from missiles except for small quantities where the missile hazard is more severe than the blast hazard. For these small quantities... increased distance as shown by experience or tests...shall be used. The term small quantities is ambiguous (states the memo) and...can be influenced by many factors such as (1) physical characteristic of item, (2) environment in which item is located, (3) number of items concentrated in location, (4) acceptable fragment risk-factor density. Possible approaches for resolution of the problem suggested are (a) selection of a cut-off point at which a constant distance would be used for all quantities of explosives below that point; (b) selection of different cut-off points for different quantities of explosives. At one time the Fragmentation Work Group recommended 1800 ft/5000-15,000 lbs; 1200 ft/200-5000 lbs; 800 ft/50-200 lbs; and confinement of fragments or local protection for 0-50 lbs.; (c) selection of a fragment risk-factor density; (d) using a distance if the Military Departments have valid test data which shown that the fragment risk-factor density can be statisfied at a distance less than the cut-off point; and (e) any tests which the Board considers advisable could possibly be incorporated into present test programs of the Board or a new test program initiated.

*Material reproduced in Appendix D.

Table B-1 (continued)

Reference Vol/Pp/Date	Document Identification	Fact/Datum (usually abstracted and/or paraphrased)
21 8081-3 10 Dec 65	Resume of 237th Meeting, ASESB	Items somewhat related to subject project included (1) comments on revised draft of report of Barricade Study Team; (2) Board reviewed proposed revision to "Safety Manual for Siting, Constructing and Equipping Pier and Wharf Facilities for Handling Explosives and Ammunition." Unanimous agreement was reached on all changes; (3) Status report given to Members on revision of DOD Directive 4145.17 "Quantity-Distance Standards for Manufacturing, and Storage of Mass-Detonating Explosives and Ammunition." Criteria previously approved by Board were read into record. Technical changes will not be made. New criteria are being incorporated into the Directive and proposed Directive will be submitted to ASD(I+L) for service coordination and publication.; (4) Paper titled "Proper Application of Paragraph V B, DOD Directive 4145.17, (Incl 1), Dec 7, 56" was postponed until next meeting to give one of Services more time to study problem. Significant details of these items or other from this Meeting are listed below.
21 8090-1 24 Nov 65	Verbatim Transcript of ASESB Meeting #237	Army Material Command member mentioned a preliminary report relating to "Nike-Sprint Ground Radius Effects Test" and i appears that a distance of 450 ft is that at which the 1.3 psi overpressure limit extends to. This psi overpressure and corresponding distance range is relevant to the topic of when the fragment hazard becomes greater than the blast hazard in applying the provision of Para V B DOD Directive 4145.17. See below for further details on this topic.

Table B-1 (continued)

Reference Vol/Pg/Date	Document Identification	Fact/Datum (usually abstracted and/or paraphrased)
21 8157 29 Nov 65	Memo for ASESB Members from Chmn, ASESB	Memo deals with ASESB Work Group activities. Deals with group to study Fragmentation Distance Requirements and Hazards for large missile and weapons systems (ASESB Memo 427-62/5) and group to study Quantity-Distance Requirements for large solid propellant missile motors (ASESB Memo 135-62/5). First Memo dtd 23 Apr 62 and latter one dtd 7 Feb 62. Review of current Board activity in these areas indicates that some realignment should be made and that portions of the missions of these work groups will be handled by staff action, new work groups, or such other methods as circumstances dictate. The work groups appointed by above references are hereby dissolved.
21 8171 7 Dec 65	Memo for Board Members from Chmn, ASESB	Memo deals with proper application of Para V B DOD Directive 4145.17, 7 Dec 56 which deals with the problem of how to determine when the fragment hazard becomes greater than the blast hazard in applying the provisions of the subject para. Board staff proposed that the 3rd sentence of Para V B 1 be changed to read: "These distances, which are based on damage from blast effects, also provide a high degree of protection from missiles except for quantities below 3500 lbs. For this lower region, the missile hazard can be more severe than the blast hazard and a safety distance of 1200 ft should be provided except where irrefutable analysis, experience or tests show that lesser distance will provide a reasonable degree of protection. Distances less than 1200 ft may be used when the targets within that distance are of such a character as to be resistant to the missile hazard, or are provided with adequate resistant protection.
21 8184 5 Oct 65	Ltr from Navy Member to Chmn, ASESB	Ltr deals with proper application of Para V B DOD Directive 4145.17 (Incl 1), 7 Dec 56. States that ASESB Memo 937-65/3 of 7 Sept 65 be used (graduated table shown in para. 3(b)) for selection of a fragment risk-factor density until such time as an acceptable fragment density can be established.

Table B-1 (continued)

Reference Vol/Pp/Date	Document Identification	Fact/Datum (usually abstracted and/or paraphrased)
21 8203-8226 14 Dec 65	Memo for ASD(I+L) from Chmn, ASESB	Memo forwards proposed DOD Instruction "Quantity-Distance Standards for Manufacturing, Handling, and Storage of Mass-Detonating Explosives and Ammunition." Instruction incorporates changes approved by ASESB over an extended period of time. Changes included expansion of inhabited building, passenger and public highway table.
21 8256-8 28 Feb 66	Resume of 238th Meeting of ASESB	Main item discussed at this meeting was Para. V B, Incl. No. 1 to DOD Directive 4145.17 (7 Dec 56). Specific question was the application of cited reference when the fragment hazard exceeds the blast hazard. After considerable discussion, Board agreed on following recommendations of Air Force Member: (a) ASESB take such action as is necessary to determine, and publish an acceptable fragment risk density factor; (b) pending completion of above actions, Board base their review of proposed sitings on Table 4, above reference; (c) Staff should undertake study to see how to initiate a new fragmentation project to identify those areas requiring more study and test and recommend to ASESB criteria or guidance to replace Para. VB(1) of DOD Directive 4145.17. Additional details regarding this Meeting appear below.

Table B-1 (continued)

Reference Vol/Pp/Date	Document Identification	Fact/Datum (usually abstracted and/or paraphrased)
21 8331-2 2 Feb 66	Memo to Members, AFESB from AFIIS Department of the AF,HQ, USAF	Memo relates to proper application of Para VB, DOD Directive 4145.17 (Incl 1) and summarizes results of extensive analysis of references and other material on the related topic. Of particular concern are: (1) ambiguity of subject DOD Directive which results in inconsistent application of safety criteria; (2) need for additional data and knowledge between fragment production/distribution and energy levels; (3) urgent need exists for an acceptable fragment risk factor which could be used to review and establish safety distance criteria and to evaluate the fragment hazard in specific cases, environments, tests, and analyses; (4) it is possible in some circumstances that a fragment hazard could exceed the blast hazard. Until more evidence is presented there does not seem to be justification for applying greater safety distances than those specified in Safety Distance Tables of subject DOD Directive; and (5) there is a history of ASESB approvals for siting facilities based on Table 4, subject Directive, which involved "small quantities" of explosives. This would be radically changed based on the new concepts expressed in references to this memo.

Table B-1 (continued)

Reference Vol/Pp/Date	Document Identification	Fact/Datum (usually abstracted and/or paraphrased)
22 8407-9* 22 Mar 6[illegible] (REPRO #5)	Ltr from Chmn, ASESB to Cdr, US Naval Wpns Laboratory, Dahlgren, Va.	Letter relates to development of safety criteria applicable to fragment producing explosives. Letter contains much significant information relating to subject topic. Numbers relate to letter paragraph: (1) ASESB has directed Chairman to develop improved technical criteria to govern safety separation of...exposed targets from accidental detonation of explosives in combination with fragment producing material. Dahlgren Lab may be one to help with problems; (2) American Table of Distances and derivatives such as DOD Directive 4145.17 or 4145.23 set forth distances which afford a described degree of protection from the blast effects, but...in some situations with fairly small quantities of explosives and shorter distances these same distances may not afford equally good protection from fragments; (3) investigation and inquiry to date by ASESB secretariat has been inconclusive...except that better guidance is needed; (3a) no agreement exists as to what constitutes an unacceptable degree of personnel casualty or damage to structures and material such as density of fragments per unit area or other such criterion; (3b) no agreement exists of personnel exposure risk; (3c) not now believed that sufficient incidents are available to give firm refined values for a complete set of standards; (4) definite need exists for some definitive criteria for protection against fragment hazards in DOD activities; (5) practicing explosives safety engineering personnel have considered the fragment damage standardization problem at length but without conlusions; (6) minimum effort would be to collate existing recorded experience.
22 8471-3 20 May 66	Resume of 239th Meeting of ASESB	Highlights of Board Meeting relevant to subject project relate to (3,g) steps being taken by Board Staff to initiate further scientific investigation of the dispersal of fragments and debris from explosions with a view toward determining needs for changes in existing criteria and (3,h) efforts of group to develop a uniform DOD safety publication for use in administration of contracts involving hazardous material. These and other significant items at this Meeting are mentioned below.

*Material reproduced in Appendix D.

Table B-1 (continued)

Reference Vol/Pp/Date	Document Identification	Fact/Datum (usually abstracted and/or paraphrased)
21 8525- 8330 8 Feb 66	Verbatim Transcript, ASESB Meeting #238	Main item at Meeting was an extremely long and interesting discussion relating to application of para. VB of Inclosure (1) to DOD Directive 4145.17. Relates to fragment problem. Only few highlights of Verbatim Transcript are noted here, whereas discussion extends from pp. 8259-8290: USAF Member states that total protection against fragment cannot be provided; further, criteria must be based on analysis of the data available. You must also know what risk factors you are aiming toward. We know we are trying to provide less than total protection, but we do not know what this degree of protection is. One of the impressions we got from our literature search was the definite feeling that for small explosions the missile hazard exceeded the blast hazard...(and later in Meeting Alt. Army Member states) We have from our survey noted the variance of missile densities of 1/1,000,000 sq ft all the way down to 1/4,000 sq ft. But the Board itself has never, to his knowledge, voted on what is an acceptable missile density. Chairman states that they can't even find out whether this particular problem has ever been addressed in this fashion before. Discussion seems to terminate with decision to undertake a study of how to initiate a fragmentation project to identify areas requiring more study and tests and a recommendation to Board that criteria or guidance be adopted to replace Para. VB(1) of DOD Directive 4145.17.

Table B-1 (continued)

Reference Vol/Pp/Date	Document Identification	Fact/Datum (usually abstracted and/or paraphrased)
22 8527 18 Apr 66	Ltr from Cdr, US Naval Wpns Lab to Chmn, ASESB	Letter relates to development of safety criteria applicable to fragment producing explosives and indicates that NWL Dahlgren concurs with thoughts of above-mentioned letter (pp. 8407-9) and establishment of criteria mutually agreeable to all services. Says NWL, Dahlgren cannot do all work at moment.
22 8528-30 24 May 66	Ltr to Chmn, ASESB from Tech Dir US Army BRL	Letter deals with development of safety criteria applicable to fragment producing explosives. Para. 2 indicates that Technical Director, BRL, believes that problem is threefold and relates to effects of air blast, effects of primary fragmentation (originating from munition itself), and secondary fragmentation (defined as that produced and originating from the munition storage containers). Letter continues that what can be done most profitably to answer the questions is a systematic study and analysis of accident and pertinent test data which the ASESB has on file.
22 8543-5 22 Aug 66	Resume of 240th Meeting of ASESB	Only item somewhat related to subject topic covered at this Meeting dealt with scientific data which had been accumulated with respect to the value, if any, of barricades in influencing distant air blast peak overpressures resulting from an explosion. In this connection, a revised proposed policy to be used by the ASESB Secretariat with respect to barricades was presented to the Board Members for their approval. The guidance entitled "ASESB Guidance to the Secretariat Regarding Construction of and Dependence Upon Barricades for Inhabited Building Protection" was approved by the Board.
22 8751-2 27 Sep 66	Resume of 241st Meeting of ASESB	Only item of tangential significance to subject topic related to quantity-distance regulation for large amounts of HE in excess of 500,000 lbs. Present Q-D Instructions contain inconsistencies in the degree of protection afforded for inhabited building targets from different source environments.

Table B-1 (continued)

Reference Vol/Pp/Date	Document Identification	Fact/Datum (usually abstracted and/or paraphrased)
23 8803-4 21 Nov 66	Resume of 242nd Meeting of ASESB held 24 Oct 66	Only significant item at meeting related to subject topic dealt with Department of the Army request concerning DOD Inst. 4145.23 (11 Mar 66), "Quantity-Distance Standards for Manufacturing, Handling and Storage of Mass-Detonating Explosives and Ammunition." Army presented to Board for approval, a proposed new standard plan for an ammunition maintenance facility, since the Instruction does not specifically specify separation distances required between operating lines. Approval by Board. Was proposed that early attention be given to reviewing the current DOD criteria which bear on this problem.
23 8900-1 16 Dec 66	Resume of 243rd Meeting of ASESB held 22 Nov 66	Most significant item related to subject project (#4) relates to proposed revision of DOD Directive 4145.1 "Quantity-Distance Standards for Airfields, Heliports, and Seadromes." Several changes to the work group's efforts were discussed and approved and document will be sent to DOD for coordination. Procedure and steps involved in change making are the most significant aspect of this item. Details appear directly below.
23 8917-33 22 Nov 66	Verbatim Transcript, ASESB Meeting #243 22 Nov 66	Most significant item on the noted pages relates to discussion on changes to above-mentioned DOD Directive. Details noted relating to the reasons for each change recommended, discussion where conflect arises between services, question of how much in a hurry everyone is and whether or not the technical people should be consulted further (p. 8926). Concurrence reached.
23 8969-84 10-29 Nov 66	Correspondence to Board Members and ASD(I+L) dtd. 10-29 Nov 66	These correspondences relate to quantity-distance standards for airfields, heliports, and seadromes and indicate actions taken prior to Board Meeting #243 and following it relating to the subject topic. Final correspondence to ASD (I+L) has as an inclosure the proposed DOD Instruction with the request that it be coordinated and published. Instruction appears on pp. 8972-8984.

Table B-1 (continued)

Reference Vol/Pp/Date	Document Identification	Fact/Datum (usually abstracted and/or paraphrased)
23 9014-16 22 Nov 66	Transmittal of DOD Directive 4145.18	Transmits page and pen changes to subject directive, "Quantity-Distance Standards for Pier and Wharf Facilities Handling Explosives and Ammunition" dated 23 Nov 59. Seem like relatively minor changes requiring only executive action.
23 9130-2 31 Mar 67	Resume of 245th Meeting of ASESB	Significant items cited in this summary included the feasibility of developing coordinated criteria governing the separation of explosives and POL storage and vice versa. Work group was formed. Expanded details relating to this Meeting appear below.
23 9133-72 14 Mar 67	Verbatim Transcript of ASESB Meeting #245	Item discussed on pp.9146-50 asks for a review of what happens and what can be done about fragmentation. Chairman mentions that what they've done is essentially zero. After investigating the most evident avenues of solving problem and getting competent technical opinion on what resources would be required to start any significant program would take almost all the resources of the Board for a year. Chairman suggests a research program. Air Force Member agrees with Chairman's handout but suggests, additionally, that the Board develop a set of standards against which the scientific community can work. Not standards tied to explosive phenomena, but a matter of what risk Board can take. Chairman agrees to idea.
23 9157-65 14 Mar 67	Same as above	Detailed discussion related to first-guess proposed quantity-distance standard for separation of POL and ammunition and explosives derived substantially from the written material now existing within DOD on the explosive safety side only. Decide to form a work group to advise Board on technical details.
23 9174-5 24 Feb 67	Memo for Board Members from Chmn, ASESB	Memo relates to proposed uniform standards for separation of POL facilities from ammunition and explosives storage facilities. Inclosure indicates the principles to be applied to the various separations. Memo is in preliminary preparation for 245th Meeting of ASESB.

Table B-1 (continued)

Reference Vol/Pp/Date	Document Identification	Fact/Datum (usually abstracted and/or paraphrased)
23 9179 30 Mar 67	Memo for Members ASESB from Chmn, ASESB	Memo relates to establishment of work group for POL/explosives storage. Mentions that during 245th Meeting of ASESB decided to establish subject work group and details responsibilities of members.
23 9185 3 Apr 67	Memo for ASD(I+L) from Chmn, ASESB	Memo relates to serious explosives hazards at the U.S. Naval Station, Newport, R.I. In para. 2 mentions that hazard is of such unusual gravity that ASD(I+L) should be advised. Relates to numbers of ships at given piers and quantities of ammunition carried aboard.
23 9186-7 5 Apr 67	Ltr to Commander, NAVORD from Chmn, ASESB	Letter relates to explosives safety survey of U.S. Naval Station, Sangley Point, P.I. Mentions locations that do not meet quantity-distance requirements to inhabited buildings.
23 9188-9 5 Apr 67	Ltr to Cdr, NAVORD from Chmn, ASESB	Letter summarizes report of explosives safety survey of U.S. Naval Air Station, Cubi Point, P.I. Mentions that an incident in either of two exposures could cause significant destruction of aircraft and other equipment and that noted hazards should be promptly corrected.
23 9195-7 7 Jun 67	Resume of 246th Meeting of ASESB	Highlights of Meeting relating to subject topic include: (item #4) draft publication of one document containing all ASESB directives and Instructions; and (item 6b) information relating to the POL/ammunition work group previously suggested.

Table B-1 (continued)

Reference Vol/Pp/Date	Document Identification	Fact/Datum (usually abstracted and/or paraphrased)
23 9246-7 11 May 67	Ltr from AF Member, ASESB, to Chmn, ASESB	Letter relates to explosive safety resea. program analysis and review and was provided for discussion in connection with the undated paper (same subject as above) presented at ASESB Meeting #245. Letter endorses program presented at ASESB Meeting #245 and recommends certain modifications, including (Step 1,c) developing the background of each QD table in existing DOD directives citing the substantiation and/or rationale for each existing criterion and (step 4,a) utilizing the information gained to improve the criteria and develop an adequate and fully defensible rationale for all parts of the DOD criteria.
23 9250-58 31 May 67	ASESB Memo for Record	Memo relates to congressional questions regarding Port Chicago appropriation request. Relates to Navy Milcon 68 item to acquire small community of Port Chicago, Calif. and some adjoining undeveloped property. Community is exposed to hazard of ammunition outloading at the piers of NAD Concorn. General subject of the conference was safety quantity-distance tables, primarily those contained in DOD Inst. 4145.18 and the meaning of the different levels of separation required by these tables. Specific questions and discussion items are noted.
23 9259-61 2 Jun 67	ASESB Memo for Record	Memo relates to interview of Board Safety Engineer and Congressman regarding Port Chicago land acquisition. Questions and answers relating to a prolonged discussion of the regulations relative to quantity-distance separation for ships and piers (contained in DOD Inst. 4145.18) are especially relevant to subject project. Board Engineer mentions that Board does not approve waivers. No final conclusions or agreements reached at meeting.

Table B-1 (continued)

Reference Vol/Pp/Date	Document Identification	Fact/Datum (usually abstracted and/or paraphrased)
24 9277-9 6 Aug 67	Resume of 247th Meeting of the ASESB	Highlights relevant to the subject study are: (Item 3d): progress report made on URS Corp barricade literature search; (item 10): Board discussed plans submitted for siting of steel arch igloos...with proposed separation distance of $2.35W^{1/3}$ for 100,000 lb explosive limits... Review of problem and technical discussion followed. Excellent example of how various modifications come about under present provisions of DOD instructions under which Board operates.
24 9280-9320 11 Jul 67	Verbatim Transcript, Meeting #247 ASESB	Mentions at outset of meeting that Chairman thinks it's a good idea to have meetings about once every two months just on general principles. Items of significant interest are noted below.
24 9280-2 11 Jul 67	Same as above	Discussion of appearance of Secretariat Member to discuss application of quantity-distance standards relative to piers and wharves...at outloading activities at Naval Weapons Station, Concord, Calif. General, short discussion. No conclusions.
24 9392-7 11 Jul 67	Same as above	Interesting discussion during presentation of site plan. Alternate Navy Member mentions again that 1950 standards would probably be ideal of using for quantity-distance rules if only very objectionable parts were removed. He indicated that they used a rule of $50W^{1/3}$ whether or not barricades were used. He thinks that number is pretty close to what it should be. He also indicates, in response to a question, that projectiles/missile hazard never posed much of a problem. Chairman agrees and also states that it is recognized very inaccurately in existing literature that problem of a hazard from missiles over-rides hazard from blast...and Alternate Navy member adds that can't do much about that except close-in. General, qualitative discussion continues with no conclusions reached.

Table B-1 (continued)

Reference Vol/Pp/Date	Document Identification	Fact/Datum (usually abstracted and/or paraphrased)
24 9443-6 11 Jul 67	Same as above	Long discussion over where to put certain weapon, either into Class 4 or Class 7 category. Interest relates to the confessed confusion exists over how much judgment there is in the basic standards relating to quantity-distance rules for Class 7 materials, especially with respect to the fragment hazard from small quantities (p. 9445).
24 9448 19 Sep 67	Memo for Army Member, ASESB from USAF Chief Technical Div.	Memo relates to resolution of hazard classification differences among the military services. Trying to resolve subject problem; correspondence and enclosures directly below relate to this problem area.
24 9449-53 1 Nov 67	Memo for Members, ASESB from USAF Chief, Tech Div	Enclosures relate to above topic. Includes comprehensive discussion and concluded that procedural differences in explosives hazard classification exist among the services and early resolution is necessary. Some services do not agree (or classify differently) whether primary hazard is blast or fragmentation. Creates confusion over which quantity-distance tables to use in one case or another.
24 9454-9 6-23 Oct 67	Letters from Army to Chmn, ASESB; also AF to Chmn, etc.	Series of several letters deal with same topic discussed above, resolution of hazard classification differences among the military services. Army letter stated that Air Force system should not be universally adopted for identifying fragment hazard ammunition. Comments made to support that position. Air Force letter rebuts this position and cites reasons for doing so. Letter also sent to Chairman, ASESB, from Cdr, NAVORD, in which Navy states that their view is that there basically is no difference between Air Force classification and Army one. Navy does not object to the proposition of providing fragment distance protection for small quantities of Class 7 munitions when fragment distances are greater than that required for blast protection from such quantities. Recommended that such a table be included in the appropriate DOD instruction.

Table B-1 (continued)

Reference Vol/Pp/Date	Document Identification	Fact/Datum (usually abstracted and/or paraphrased)
24 9492-4 8 Mar 68	Resume of Meeting #250, ASESB	Items of significant interest to subject topic include: (item 2) Board considered problem of hazard classification for items which exhibit both fragment-producing and mass detonation characteristics. Decided to refer problem to committee...which would consider data available on hazard presented by known items of ammunition when existing standards are applied and then attempt to fix risk levels for other items such that this hazard will not be exceeded. (item 7) Chairman outlined program being instituted to utilize service of scientific consultants that would provide additional objective advice for the direction of the Board's overall test and evaluation program. Details considered of significance appear below.

Table B-1 (continued)

Reference Vol/Pp/Date	Document Identification	Fact/Datum (usually abstracted and/or paraphrased)
24 9495-9544 20 Feb 68	Verbatim Transcript, ASESB Meeting #250	Most significant item appears on pp. 9496-9508 and relates to problems arising with regard to the storage of small quantities of Class 7 items which in small quantities presented a predominant fragment hazard rather than a blast hazard. At previous Board meeting was recommended that major change be looked into for DOD Instructions 4145.23 and 4145.22. Long discussion follows. Alternate Navy Member indicates that problem is that all fragments aren't going to stay within 1200 ft... this is what they've been trying to get at for years and years. Members seem to agree that unless they have better guidelines for fragment hazard, they have nothing to work together on. Chairman states that trying to accurately define acceptable fragment hazard was issue sidestepped many years ago. Alternate Army Member states that work was done in area...and general disagreement with conclusions reached. First mention made here of magic figure of 58 ft-lb fragments (p. 9502) being well known and some data available at some distances, but not all. Also, mention made of one fragment per 600 sq ft. Type of information that was available was (e.g., for 240mm M114 projectile) 700 ft with v_i = 3300 fps except 1450 so-called effective fragments of 58 ft-lb or more giving an average number per sq ft of something like 24/100,000. The probability of hitting a man was on the order of one in 1667 with a roughly ½-oz fragment. Chairman suggests working group to study problem, see what data are available, study true hazard from fragments and attempt to develop some meaningful criteria which all Services can use to judge hazards of these materials. Also panel should make effort to make some definition, such as what are small or large quantities and the other words which are confusing in discussions of this type. Perhaps also make a recommendation as appropriate to change the two DOD instructions.

Table B-1 (continued)

Reference Vol/Pp/Date	Document Identification	Fact/Datum (usually abstracted and/or paraphrased)
24 9508-10 20 Feb 68	Same as above	During discussion on consolidation of incorporation of existing explosives safety standards (DOD Directives and Instructions) into one document following interesting comments were made: Chairman stated that the existing varying practices of the Services with regard to waivers don't make too much sense. The waivers are granted with the same basic reason but their level of responsibility at which they are decided is different from Service to Service. The benefit that the Service gets out of their waiver procedure is markedly different and Board has been silent officially, even though it believes that the Navy procedure is the least formal and hardest to keep track of; also apparent that the Naval Stations which have waivers are the first to forget that they got them..Air Force waiver procedure seems most thoroughly documented. Midway between this is the Army procedure. Though not unreasonable, it is something that could be easily recommended as a standard for all the Services.
24 9545-7 19 Jan 68	Memo for Board Members from Chmn, ASESB	Memo relates to fragment hazards from small quantities of Class 7 Material (small relates up to 30,000 lbs explosives). Memo mentions that during discussion of subject during 249th Board Meeting, Secretariat was requested to prepare a recommended modification to Table 4 of Inclosure 1 (DOD Instruction 4145.23). To be called "Quantity Limitations and Quantity-Distance Standards for Manufacturing, Handling, and Storing Ammunition and Explosives." To paragraph IIB should be added: "When designating the hazard classification of an item, a basic hazard class for the maximum quantity will be assigned, i.e., blast, fragment, or fire. Where smaller quantities of items or conditions of storage present a different controlling hazard, the appropriate hazard class to indicate the minimum permitted storage distance will be shown following the basic hazard classification." Table #4, which is the enclosure to this memo, currently gives for not over 30,000 lbs (net) of explosives, a distance in feet of 1245 (barricaded) or 2260 (unbarricaded) to inhabited buildings. Multiply these by 60% to get "To Passenger Railroads and Public Highways" (745 ft and 1355 ft, resp.).

Table B-1 (continued)

Reference Vol/Pp/Date	Document Identification	Fact/Datum (usually abstracted and/or paraphrased)
24 9550 6 Feb 68	Memo for Members, ASESB from Chmn, ASESB	Memo relates to consolidation of DOD Directives and Instructions. Lists principal changes made to current Directives, discussed at Meetings #246 and #247 of Board: consolidation of all definitions into one chapter; application of the same criteria to facilities common to all types of installations regardless of their location; diagrams for applying various magazine separation tables; requirements for submission of site and construction plans to the ASESB and the data required for such submittals; consolidation of the basic quantity-distance tables in one chapter; elimination of duplicate tables and extension of the appropriate basic tables; and deletion of the unbarricaded distance for special type magazines.
24 9762 23 Apr 68	Memo for Members, ASESB from Member, Secretariat	Relates to meeting of Ad Hoc Committee to study fragmentation hazards. Says that information relating to fragmentation hazards from ammunition items are difficult to come by and may take considerable extra time to gather data. Interest and significance relates to the lack of available data on subject topic.
25 9846 25 Jun 68	Memo for Asst SECNAV(I&L) from Chmn, ASESB	Memo discusses explosives safety survey at US Naval Submarir Base, New London, Conn. Conditions were found to be same as in CNO ltr dtd 4 Aug 66, specifically: a. severe quantity-distance violations to many on-station buildings...and b. ..quantities of explosives on submarine tenders which...violate regulations with respect to State Pier at New London. Waivers of explosives safety quantity-distance regulations at this installation...present untenable risks...

Table B-1 (continued)

Reference Vol/Pp/Date	Document Identification	Fact/Datum (usually abstracted and/or paraphrased)
25 9858-9 18 Jul 68	Ltr from Chmn, ASESB to Dep COS for Personnel, Dept. of Army	Letter reports on explosive safety survey of Representative Basic Load Storage Areas, Germany. Sums up much similar correspondence relating to overseas storage of munitions. States that quantity-distance violations existed at each of storage areas visited..exposing foreign nationals and property to the hazards of blast and fragments...accomplishments are few and funds needed to fence and equip suitable alternate areas are not forthcoming. No recommendations made.
25 9875-6 7 Nov 68	Resume of 252nd Mtg of ASESB, 10 Sep 68	Main items of significance to subject topic were: (Item 5) discussion of barricades and their usefulness. Board agreed that 12 Jul 66 guidance would be rescinded which required site plans involving the construction of barricades solely to comply with barricaded inhabited building distance. In future Board will act on each case according to explosives safety standards. (Item 6) Members agreed that problems of simultaneity, barricades and fragmentation should receive the highest priority for resolution. (Item 7) Board agreed that some reorientation of surveys was desirable. Differences of opinion and Chairman made decision that future surveys are to be oriented towards a higher level to determine compliance with DOD standards and to detect conditions which could result in loss of life or damage to property within or outside of DOD installation. Services are to be responsible for detailed survey. (Item 8) Reviewed status of fragmentation hazards evaluation project. Agreed to set up work group to write a contract proposal. (Item 9c) Members agreed that new manual "DOD Ammunition and Explosives Safety Standards" is to both consolidate instructions and also change existing policy as necessary to provide an up-to-date set of standards.

Table B-1 (continued)

Reference Vol/Pp/Date	Document Identification	Fact/Datum (usually abstracted and/or paraphrased)
25 9877-9979 10 Sep 68	ASESB Mtg 252, Verbatim Transcript	Discusses in detail on these pages agenda items listed on p. 9981. First item of significance noted related to barricades. Chairman indicated that now Board is in position of saying, when they review site plans involving barricades, that it's acceptable under certain circumstances but recent tests and evaluations indicate they are of doubtful value in blast but useful in stopping missiles and fragments. They hope to resolve problem before end of fiscal year.
25 9901-2 10 Sep 68	Same as above	Continues topic of barricades. Board agrees to investigate new proposal for setting quantity-distance standards. Chairman suggested developing formulae, review of facilities and state in specific terms which hazards were involved. Primarily (says Board chairman) you are looking for a more scientific basis for given distances.
25 9934-9 10 Sep 68	Same as above	Discusses subject of "evaluation of fragmentation hazards." Long discussion. Statement that can't possibly protect against all fragments. Must make decision about fragment density. Chairman was told that proposal made earlier and was dropped because nobody wanted to accept responsibility of stating what the risk hazard should be. Decided to set up preliminary work group to get idea of where things are at with fragmentation. Statement made that not too much data available on class 7 ammunition or fragments from structures and that is the really important thing needed. Subsequently maybe they would have one of the Government laboratories do some studies.
25 9960-1 10 Sep 68	Same as above	Mentions gross violations of quantity-distance regulations at New London, Conn. that have existed for at least 20 years. Main complaint currently seems to be that they are storing torpedoes in middle of highly populated areas. Difficulties and potential solutions discussed. Latter seems to be allowing only three warheads in given building, even though there may be many more torpedoes in the building. Helps to limit amount of explosive to 1500 pounds.

Table B-1 (continued)

Reference Vol/Pp/Date	Document Identification	Fact/Datum (usually abstracted and/or paraphrased)
25 9980-1 27 Aug 68	Memo for Board Members from Chmn, ASESB	Memo lists nine agenda items for Board Meeting 252. Eight inclosures present details for specific items to be discussed. Specific items are delineated below.
25 9982-3 27 Aug 68	Same as above	Relates to referral of site plans involving barricades for Board action. Gives ASESB guidance to Secretariat regarding construction of and dependence upon barricades for inhabited building protection. Specifically states that referral of specific site plans to Board in each case...is unnecessary...and subsequently, attached guidance should be followed.
25 9984 27 Aug 68	Same as above	Lists investigations to be pursued regarding simultaneity of explosions. Pending further investigation, following guidance is given: "...controlling quantity of explosives in a magazine,...or other explosion site shall be the net weight of the controlling explosives therein..."
25 9985 27 Aug 68	Same as above	States that inadequate information exists to assess total fragment and debris hazard from explosions of many different kinds of ammunition and widely varying environments. Indicates that Secretariat is sponsoring preparation of a program for long-range study of problem with respect to DOD quantity-distance regulations and the uniform hazard classification of ammunition items.
25 10,028 4 Oct 68	Ltr from Chmn, ASESB to CDR NAVORD	Discusses waivers for violation of explosives and ammunition handling quantity-distance standards and other pertinent safety regulations. Requests Navy to prepare plan to limit request for waivers to remedy previously revealed (Navy's) lack of a systematic and standard system for the control of subject waivers which is commonly understood at the various installations.

Table B-1 (continued)

Reference Vol/Pp/Date	Document Identification	Fact/Datum (usually abstracted and/or paraphrased)
25 10,029 14 Nov 68	Ltr to Chmn, ASESB from CDR. NAVORD	Ltr answers one above and says that a review of the material submitted by several NAVORD activities has been made and that NAVORD has prepared an instruction which will cancel all waivers in effect as of 1 Mar 69 and will require that those waivers still required be submitted with new justification. After review waivers will be re-granted as required in an orderly systematic manner.
25 10,031 15 Oct 68	Ltr from Chmn, ASESB to ASN(I&L)	Relates to report of explosives safety survey of U.S. Naval Ammunition Depot, Bangor, Wash. Survey conducted 16-18 Sep 68 revealed quantity-distance violations of considerable significance, inadequate system of waivers covering quantity-distance violations, other violations.
25 10,066 6 Jan 69	Resume of 253rd Meeting of ASESB	Items of significance to the subject topic include: (Item 9) considerable discussion took place concerning what distance should be prescribed for inhabited buildings if barricades prove to be ineffective against blast. No decision reached; (Item 11) proposed study plan for establishing fragment hazard criteria by task team which was appointed to review the subject of fragment hazards from explosives and ammunition was presented to the Board. (Item 13) Board Members agreed that there should be separate standards outside-CONUS. Chairman proposed work group to look into this.
25 10,069-127 10 Dec 68	Meeting #253 of ASESB, Verbatim Transcript	Detailed discussion of agenda items listed on pp. 10,128-9. Significant item on pp. 10,073-76 relates to Navy progress in elimination of waivers. Discusses Navy's new program of eliminating all waivers and setting up central office in NAVORD for granting all new waivers. No definite conclusions.

Table B-1 (continued)

Reference Vol/Pp/Date	Document Identification	Fact/Datum (usually abstracted and/or paraphrased)
25 10,106-9 10 Dec 68	Same as above	Discussion relates to unbarricaded inhabited building distance for case where barricades prove to be ineffective against blast. Inconclusive discussion relates to whether primarily blast damage alone should be considered or also fragment damage...and whether close-in or far-out distances are of more significance. Also question raised as to where barricade location should be to do the most good (target? donor? elsewhere?). Alternate Navy Member states that back in 1950 or earlier very comprehensive (Ilsley) study was made that concluded that barricades did not do any good at inhabited building distance for protection against blast. The 1950 standards (said he) came out with no credit for barricades. He said they used a factor or 50, where the longer distance used a factor that varied between 70-80. Shorter distance was 40. No conclusion reached nor decisions made following this discussion.
25 10,128-9 10 Dec 68	Agenda for ASESB Meeting #253	List 23 items discussed at Meeting #253. Details regarding these items are on following pages. Those of significance are expanded upon below.
25 10,140-1 29 Oct 68	Memo for Military Department Representatives from Chmn, ASESB	Memo discusses fragmentation hazards evaluation and states that addressees will be a task team to review subject of fragment hazards from explosives and ammunition and make recommendations for further DOD action. They are to specifically consider: (a) collation of existing ballistic information about various fragment producing weapon systems; (b) reduction of this information into form that is usable for establishing safety standards in DOD; and (c) make suggestions for additional work to extend ballistic information to multiples of single units and to storage and manufacturing situations.

Table B-1 (continued)

Reference Vol/Pp/Date	Document Identification	Fact/Datum (usually abstracted and/or paraphrased)
25 10,141-56 7 Nov 68	Memo for Chmn, ASESB from Military Department Representatives of Study Team (see above)	Memo includes as inclosure the proposed study plan for establishing fragment hazards criteria (see item directly above). Memo lists purpose of task team, approach, program outline. This latter includes establishment of appropriate damage levels for each class of target, computation of fragment densities and damage probabilities as a function of distance and polar angle for several important munitions and selected targets, determination of fragment hazards from multiple stores without environment, multiple munitions within environment, and finally an application phase. In this last phase the capabilities developed in the preceding phases would be applied to existing and planned explosive storage, handling, and manufacturing sites. This would be done to estimate values of damage probability to exposed personnel, ammunition, facilities, etc. in the general vicinity of the sites and, in particular, at existing applicable DOD quantity-distance standards distances.
26 4 pp preceding 10,256 not numbered 1 Apr 69	Resume of 254th Meeting of ASESB	Items of interest to quantity-distance rules include: (a) review and analysis of contracts with IITRI and RTI; (b) presentation of work group recommendations on quantity-distance standards for interchange, classification, and holding yards; (c) work group recommendations listed for interim standards to be utilized in the event barricades are proved to be ineffective with regard to blast pressures; (d) Board Members approved plan to contract for initial work on fragmentation hazards; (e) Chmn. gave status report on contract on sequential explosions. Amplification of these items (as considered appropriate) appears below.
26 10,256-350 11 Mar 69	Verbatim Transcript ASESB Meeting #254	Transcripts present further information about topics above. Relevant inclosures follow transcripts. Items of particular note are elaborated on below.

Table B-1 (continued)

Reference Vol/Pp/Date	Document Identification	Fact/Datum (usually abstracted and/or paraphrased)
26 10,269-71 11 Mar 69	Same as above	Relates to explosives safety standards of CONUS vs overseas and combat and theaters. Mentions that sometimes conflict exists between NATO standards and US ones. Air Force representative mentioned that on targets inside of their installations they apply Air Force standards; beyond the fence line they use so-called NATO standards or governing country standards. Board approves formation of work group to further investigate problem.
26 10,271-6 11 Mar 69	Same as above	General topic is quantity-distance stands for interchange, classification, and holding yards. Work group report being reported upon was not unanimous (Air Force disagreed with Army and Navy representatives). Air Force's position was that one could not take an arbitrary distance (as contained in some of the requirements) because (he claimed) there is no basis and fact for the distances involved. He thought each site must be evaluated independently. Decided they needed more data before making any change to numbers now used. Deferred to next meeting.
26 10,292-303 11 Mar 69	Same as above	Board reviewed 1950 quantity-distance tables for interim use in the event barricades are proved to be ineffective. Previously a work group had been appointed to review the 1950 tables that were in use for awhile to see if they would be an improvement over the existing tables until such time as permanent changes were made. Work group, instead of saying "use" or "don't use" 1950 tables instead came up with a set of interim criteria. (Inclosure cited below.) Alternate Navy Member states that the basic objection to the 1950 standards (that the Army had) was that in order to be completely protected you would have to buy an excessive amount of land. Big problem seems to be glass damage. Board Member states that he thinks it's time to set up some standard because of new installation problem. Board decides to accept work group standard as interim, primarily because of the tremendous impact it should have on future construction.

Table B-1 (continued)

Reference Vol/Pp/Date	Document Identification	Fact/Datum (usually abstracted and/or paraphrased)
26 10,354 11 Mar 69	Background to Agenda Item 2b, Meeting #254 of ASESB	This note summarizes a detailed study of comparisons of explosives safety standards current in use by the United States, United Kingdom, and the safety principles to be used as a guide between the host countries and NATO forces. The study documents contained detailed, complex criteria and comparison was limited to factors that seemed paramount, viz., (a) quantity of explosives, (b) separation distances, (c) hazard classes, (d) separation requirements, (e) barricade design, (f) barricade/distance interaction, (g) compatibility grouping factors, (h) compatibility groups, and (i) storage groups combinations. Findings indicated considerable difference between the three standards. Future study will determine overseas standards to be used.
26 10,355-62 11 Mar 69	Same as above for Item 2c	Data herein related to the work group studying quantity-distance standards for interchange, classification, and holding years. Criteria reviewed for forthcoming DOD manual.

Table B-1 (continued)

Reference Vol/Pp/Date	Document Identification	Fact/Datum (usually abstracted and/or paraphrased)
26 10,406-16 11 Mar 69	Same as above for Item 3b	Presented herein are the results of the first meeting of a work group which studied the 1 April 1950 standards which provided the same inhabited building distance for barricaded and unbarricaded explosions. Group was to consider technical aspects of the problem of distant blast overpressures and to recommend suitable quantity-distance tables to be used without barricades. Group reach conclusions and recommendations (see below) and also split, with a minority (addendum) report also being written. Under discussion (p. 10,408), item 3(a) it states that there is no sound scientific basis for barricaded distances being different than unbarricaded distances by a factor of 2 in the region of interest for protection of the public if structural damage is the criterion. Item 3(a), same page, states that substantial structural damage as defined in House Document 199 will not be sustained generally at risk factors of $40\text{-}50W^{1/3}$ or greater except for certain specific highly vulnerable targets. Under item 5(b), group felt that sound principle was the establishment of a minimum unbarricaded distance for protection against fragments in the case of small quantities of explosives. Further, thought that the absolute values appropriate are somewhat uncertain but 865 ft. and 10,000 lbs. seemed to be satisfactory until the governing parameters could be more scientifically defined. First conclusion (p. 10,409) stated that basic blast protection for amount of explosives less than 100,000 lbs. is adequately provided against structural damage by a risk factor of $40W^{1/3}$. Recommendations were presented on p. 10,410 and ones relevant to this study were: (a) a fixed minimum distance unbarricaded up to 10,000 lbs. of high explosives; (b) a uniform risk factor of $40W^{1/3}$ from 50 to 10,000 lbs. when barricaded; (c) a uniform risk factor of $40W^{1/3}$ from 10,000 to 100,000 lbs., whether or not a barricade is present. These, and other recommendations considered less relevant, were proposed pending the development of more definitive criteria which take into account more exact application of existing data and previous accident experience together with scientific analysis of specific protection problems. Recommended that DOD quantity-distance tables be modified as proposed above.

Table B-1 (continued)

Reference Vol/Pp/Date	Document Identification	Fact/Datum (usually abstracted and/or paraphrased)
26 10,452-3 12 Mar 69	Memo for Board Members from Chmn, ASESB	Memo discusses policy on protective construction as recommended at ASESB Meeting of 11 March 69. Inclosure (1) list 4 items of policy that it is felt can now be protected against in early stages of construction planning.
26 10,541-5 1 July 69	Resume of 255th Meeting of ASESB	Items related to quantity-distance rules are noted: (1) Board Members agreed on policy on protective construction to be sent to Secretaries of the Military Departments. Relate to personnel protection, building protection, and denial of explosion communication (Item 3, pp. 10,541-2); Board voted changes to forthcoming manual 4145.27M relating to classification yards that stated separation distances for protection from external explosions shall be at least at the applicable magazine distance (Item 5, pp. 542-3); Board Members voted to adopt interim quantity-distance standards in the event barricades are proved ineffective. For 0-10,000 lbs. use $40W^{1/3}$ for barricaded and 865 ft. unbarricaded; for 10,000 to 100,000 lbs. use $40W^{1/3}$ barricaded or not; for 100,000-250,000 lbs. use $40W^{1/3}$ increasing to $50W^{1/3}$ and the latter factor from 250,000 to 500,000...the latter two situations for barricaded or not (see Item 6, p. 10,543). Details of these decisions of the Board are given below.
26 10,546-635 10 Jun 69	Verbatim Transcript, ASESB Meeting #255	Transcripts here give detailed comments of Board Members and Meeting attendees on agenda items listed on p. 10,637. Details are presented below where relevant to the subject topic. Of interest was a comment on p. 10,558 referring to the non-submission of site plans by the Navy. But they hope this problem is now resolved.

Table B-1 (continued)

Reference Vol/Pp/Date	Document Identification	Fact/Datum (usually abstracted and/or paraphrased)
26 10,578-83 10 Jun 69	Same as above	Detailed discussion on agenda item 2(d), interim quantity-distance standards (under old business). Navy and Air Force agree but Army doesn't (at beginning), their position being that the interim standards should not be published yet because more detailed study is needed to provide more comprehensive supporting data. Vote finally taken (pp. 10,583) and Board agrees to adopt (a) and (b) relating to inhabited buildings and intraline distances, resp., as interim standards and use the current standards relating to public highway distance until a future time. Items referred to are detailed on p. 10,647 (see below).
26 10,611-3 10 Jun 69	Same as above	Casual comments relating to piers and wharves and loading and unloading ammunition there. Board decides to not discuss the topic at this time.
26 10,646-7 4 Jun 69	Memo for Members ASESB from Chmn ASESB	Discusses interim quantity-distance standards. In connection with Agenda Item 2d (255th Meeting, ASESB), standards are proposed for use in the event barricades are proved to be ineffective. Recommendations made regarding (a) inhabited building distance, (b) intraline distance, and (c) public highway distance. Inhabited building distances listed above (previous page) for explosive weights up to 500,000 lbs. Intraline distance will be in accordance with the table to be published in DOD Manual 4145.27M. Public Highway Distance: request is made that Board Members discuss merits of recommendations contained in para. 2a of Air Force comments and para. 2 of DASA comments (given below).
26 10,648-9 9 Apr 69	Ltr from Army Member, ASESB to Chmn, ASESB	Letter gives Army Member's position on proposed ASESB interim quantity-distance tables. Letter concludes in para. 3 that a more detailed study to provide more comprehensive support data is considered a prerequisite for the adoption of new or interim quantity-distance standards. Letter also makes comments and suggestions regarding policy on protective construction.

Table B-1 (continued)

Reference Vol/Pp/Date	Document Identification	Fact/Datum (usually abstracted and/or paraphrased)
26 10,650-2 20 May 69	Ltr from Navy Member, ASESB to Chmn, ASESB	On identical topic as above, Navy Member comments (para. 2, a, (a), p. 10,650) that he concurs with fixed minimum distances for unbarricaded explosives sites for small quantities of Class 7 which the 1 April 1950 standards contained. Navy Member concurred with all recommendations except last one relating to public highway distances.
26 10,653 13 May 69	Ltr from Air Force, ASESB Member to Chmn, ASESB	Air Force concurs with the recommendations of the quantity-distance working group meeting of 27-8 Feb 69 except that (a) they do not believe that the rate or amount of target exposure should be established as a determining factor in arriving at explosives safety distances for public highways. The characteristics and vulnerability of the target should be the determining factors. (b) Adequate distances or design should provide that in facilities used for large public gatherings the occupants will not be subjected to the risk of flying glass.
26 10,654 24 Apr 69	Ltr from Chief, Shock Physics Directorate, DASA to Chmn, ASESB	Letter relates to interim quantity-distance tables to be applied in event barricades are proved ineffective in reducing blast. DASA concurs in recommendation, however they do not believe that the criterion of an essentially constant exposure for an hour or more in each day is a good criterion of traffic volume. Suggest instead annual daily average, expressed in terms of specific number of vehicles.
26 10,687-9 19 May 69	Information relating to Agenda Item 3b, for ASESB Mtg #255 (ltr p. 10,636)	Information presented about fragmentation contract negotiated with IITRI for two initial phases of a fragmentation hazard study contract (DAHC04-69-C-0056). Copy of scope of work is attached. Phase I calls for completion of study of damage levels and criteria. Phase II will study fragment risk from a single munition without environment.

Table B-1 (continued)

Reference Vol/Pp/Date	Document Identification	Fact/Datum (usually abstracted and/or paraphrased)
27 10,777 29 Jul 69	Memo for ASD(I+L) from Chmn, AFESB	Memo lists ASESB plan for refinement and expansion of explosive safety standards. Under item 5 (procedures), (1) indicates that certain aspects of the present standards are under contract for refinement or expansion. These include..sequential explosions, fragmentation hazards, effects of barricades...It is intended to contract for a review of the quantity-distance standards to insure..inclusion of results...in the Q/D tables on standards.
27 11,038-41 23 Oct 69	Memo for ASESB from Navy Member of Secretariat	This memo comprises the resume of the 256th Meeting of the ASESB. Items of interest discussed include: (1) status of analytical work with respect to barricades, (2) ..."when it is considered advantageous for quantity-distance computations to subdivide a total quantity of mass detonating explosives into smaller units, it must be ensured that there will not be propagation from one to another by construction or a suitable barrier or providing adequate separation....If this requirement is met, the explosive content of the subdivision requiring the greatest distance will govern. If this requirement is not met, quantity-distance computations must be based upon the summation of the mass detonating explosives in all of the subdivisions."
27 11,043-147 7 Oct 69	Verbatim Transcript, ASESB Meeting #256	Discussed in these transcripts are the agenda items (revised) shown on p. 11,148. Of interest to this study are interim changes to DOD Manual 4145.27M pertaining to "protective construction" and "sequential explosions." Also of interest is the review and discussion of barricades. Appropriate amplification is provided below.
27 11,058-97 7 Oct 69	Same as above	Discusses topic of protective construction and sequential explosions. Makes relatively minor changes to DOD Manual 4145. 27M in regard to these two topics.

Table B-1 (continued)

Reference Vol/Pp/Date	Document Identification	Fact/Datum (usually abstracted and/or paraphrased)
27 11,148-80 No date given	Background items for Revised Agenda ASESB Meeting #256	See pp. 11,149-50 with respect to additional information on protective construction and sequential explosions. References are listed on p. 11,149 for these 2 topics. On p. 11,150 is detailed the policy on protective construction wherein it is stated that the present state of the art can permit any calculated level of protection: (a) from explosion communication between adjacent bays/buildings; (b) for personnel against death or serious injury...and (c) of vital and expensive equipment installations.
27 11,151-4 21 Aug 69	Ltr from IITRI to ASESB	Discusses suggested change to DOD Manual 4145.27M representing a new simultaneity provision based on the IITRI research findings. Requires that, where the possibility of explosion propagation exists in a subdivided quantity of explosive total quantity be used in distance determinations unless it can be assured that propagation is delayed by time intervals not less than those given in attached table.
27 11,155-7 no date given	Recommended changes to DOD Manual 4145.27M	These suggested changes are based on the letter referred to directly above and incorporate the tabular values of "minimum required propagation delay times between any two subdivisions of total quantity" required to assure separation of effects between two or more explosions. Explosives weights given range from 0 to 100,000 (1,000 lbs increments at smallest weight up to 20,000 lb increments at largest weights). Nine increments given.

Table B-1 (continued)

Reference Vol/Pp/Date	Document Identification	Fact/Datum (usually abstracted and/or paraphrased)
28 11,186 23 Oct 69	Ltr from Executive Officer, AFESB to AG,USA	This letter, of which similar copies were sent to the other Services, deals with the annual explosives safety survey schedule and indicates that in FY 70 the number of installations being surveyed is being reduced and in subsequent years in order to permit more thorough investigation of facilities where hazards are found to exist and to provide greater flexibility in schedule changes so that follow-up visits may be made...where violations have been found and...to respond to requests for special and unscheduled surveys. Memo, due to aforementioned conditions, asks for information so they can decide which installations to survey. Request inspection reports dealing with explosive safety and reflecting severe or unusual problems and also information indicating planned utilization of installations to include changes in mission, base activations/deactivations; etc.
28 11,194 3 Nov 69	Memo for ASA(R&D) from Chmn, AFESB	Memo related to RDT&E support of the ASESB. This is first mention noted of where the Board's $500,000 yearly research budget originated and indicates that it gets $125,000 from each of the Military Departments and from DASA in accordance with DDR&E memorandum to ASA(R&D) dtd 20 Jun 1969.
28 11,195-218 5 Nov 69	Memo for ASD(I+L) from Chmn, AESB	This letter contains proposed Change 1 to DOD Manual 4145.27M (Mar 69). Change updates manual and was approved at the 256th Board meeting. Note: Under Ch. 7 (Explosives Safety Standards for Pier and Wharf Facilities) no changes are noted.
28 11,221 21 Oct 69	Memo for Chmn, ASESB from ODASD (I+H)	This memo relates to Interim Change 1-1, DOD Manual 4145.27M and lists two relatively minor questions by originator of memo. More significant one relates to whether ASESB should be notified whether a violation of current criteria exists as a facility is to be exempted for the balance of its useful life. For response, see below.

Table B-1 (continued)

Reference Vol/Pp/Date	Document Identification	Fact/Datum (usually abstracted and/or paraphrased)
28 11,222 5 Nov 69	Memo From Chmn, AFESB to ASD (I+L)	This memo, dealing with Interim Change 1-1 to DOD Manual 4145.27M, answers two questions above. Main reason why question was not considered was due to the unmanageable paper and administrative difficulties involved. Instead, the Board's Safety Engineers will review the appropriate documentation during the survey along with maps, waivers, and other relevant information.
28 11,224-8 7 Oct 69	Memo for Members ASESB from Chmn, ASESB	Memo deals with accident reporting procedures and includes as an addendum a revised copy of the proposed instruction. The instruction establishes a uniform Department of Defense quarterly accident reporting procedure to assist the Armed Services Explosives Safety Board in fulfilling its responsibilities.
28 11,242 4 Dec 69	Memo for DASD (I+H) from Chmn, ASESB	Memo discusses review of site plans submitted by Navy for review. In each case, siting of facility was in violation of existing DOD Standards. Board states that although these violations were specifically waived by the Navy...it is considered that the expenditure of...money to construct new facilities in violation of existing DOD standards should only be rarely authorized...on most comprehensive justification.
28 11,243-4 10 Nov 69	Letter from Chmn, AFESB to CNO (OP 098)	Letter relates to waiver of quantity-distance requirements for Naval Station, Long Beach. Chairman states that matter of primary concern to him is manner in which authorization of Q-D waivers are administered. While individual waivers...are considered acceptable, blanket waivers for all locations at all activities are not...and interpolation of OP-5, Table 11.2 for quantities below 25,000 lbs is not considered reasonable.
28 11,245-6 5 Dec 69	Ltr from CNO to Chmn, ASESB	Reply of CNO to above letter. Among other things he opines that when lower quantities of explosives are involved he does think interpolation of Table 11.2 (OP-5) does provide a reasonable basis for individual determinations of acceptable limitations on quantities to be handled at a given location.

Table B-1 (continued)

Reference Vol/Pp/Date	Document Identification	Fact/Datum (usually abstracted and/or paraphrased)
28 11,261-79 19 Dec 69	Memo for ASD(I+L) from Chmn, ASESB	Memo discusses RDY&E Program to resolve major problems in the field of ammunition, explosives...Of special note (p. 11,266) Line Item 103, Study of Fragment and Debris Hazard where problem is stated: "The ASESB does not have an adequate basis to establish definitive fragment and debris hazard criteria on a sound scientific basis." They suggest a 4-year phased approach to study problem with a long range follow-on effort. Further, they would like to determine hazard in terms of probability of unacceptable damage to various classes of targets from selected ammunition items. State further that adequate criteria are not now available to protect against fragments and debris. Of minor interest also are discussion of Weapons Sensitivity Handbook (pp. 11,271-2) and Index, Abstract, and Automation of accident files (p. 11,274). Of special interest is item on review of quantity-distance protection (p. 11,275) in which it is stated that the problem is that present DOD and industrial quantity-distance and other explosive safety criteria are arbitrary, inflexible, and in some cases based upon empirical data of doubtful value. Work suggested includes review of present criteria..., re-evaluation of specific portions of quantity-distance tables..., and recommendation of changes in the tables to provide appropriate levels of protection for specific categories of defined targets taking into account protection afforded by building design and orientation. Justification cited is the elimination of "seat-of-the-pants" decisions that have been embodied in the present regulations. Improve quality, workability, and soundness of judgment in the regulations...
28 11,338 2 Mar 70	Letter from Navy Member, AFESB to Chmn, AFESB	This letter relates to quantity-distance standards for classification yards and presents the Navy Member's view that opening cars present any undue hazard and thus less severe standards are applicable in this situation.

Table B-1 (continued)

Reference Vol/Pp/Date	Document Identification	Fact/Datum (usually abstracted and/or paraphrased)
28 11,339 9 Mar 70	Memo for Navy Member, ASESB from Chmn, ASESB	On subject of Q-D standards for classification years (above letter), Chairman states that a Secretariat position was submitted to the Board Members during the 255th Meeting on 10 June 69 and was unanimously approved. Therefore it will not be considered on the agenda for 257th meeting of Board.
28 11,340-2 31 Mar 70	Resume of 257th Meeting of the ASESB	The Board approved the following policy: (a) Class 6 distances will not be approved for projectiles loaded with explosives more sensitive than TNT until further evaluation; (b) Class 6 distances will not be approved for separate loading projectiles stacked in accordance with... given chart..when individual stack contains over 6000 lbs. NEC. A Board decision was reached to accept the theory of sequential explosions as applied to the berthing of adjacent ships. Pending formal change to DOD Manual 4145.27M, following policy was approved: (a) interpolation between distance increments specified in Class 2 and Class 7 tables is authorized as specified. For Class 7 minimum separation distance of 865 ft from the concentration of explosive to inhabited buildings or public highways. For mass detonating fragment-producing munitions, the minimum distance will be 865 ft. or the appropriate missile distance for the item involved, whichever is greater.
28 11,443-7 10 Mar 70	Verbatim Transcript, ASESB Meeting #257	Short discussion here relating to sequential explosions (including aboard ship) involving large quantities of explosives. Also, for this situation, discusses consideration of when ship is or is not considered to be barricaded in terms of whether explosives are given distance below the water line.

Table B-1 (continued)

Reference Vol/Pp/Date	Document Identification	Fact/Datum (usually abstracted and/or paraphrased)
28 11,447-64 10 Mar 70	Verbatim Transcript, ASESB Meeting #257	Long, rambling but quite relevant discussion on agenda item 3f dealing with interpolation of quantity-distance tables...but dealing much more generally with the entire topic of where did those numbers come from? And the Navy was the one which raised the topic this time again. Question arises on p. 11,448 of where did that magic number (865 ft) come from (asks Army member). Stated that it was in the manual as a minimum distance, might have been a Board interim standard...and it came from Dr. Illsley's computations of some years ago (p. 11,448). Reference made to 255th Meeting and it is stated that Board acted on this and decided that they would accept this criteria after the barricade and fragment studies were completed; the 800+ ft mentioned at that Meeting (#255) was to be interim. Subject continues: mention that for some classes of munitions fragments go out to 1800 ft based on BRL data. Fianlly, decided to state that rule applies..."..for mass detonating fragment-producing munitions for 865 ft..or the appropriate missile distance for the item involved, whichever is greater." NOTE: this is the minimum distance. Difficulties of this position further discussed in these pages, especially trouble of voting in a democratic fashion on a scientific matter where some voters are more expert than others. 865 ft. relates to 25,000 lbs explosives.
28 11,506-645 30 Jan 70	Memo for Members, AFESB from Chmn, AFESB	This letter and the large amount of inclosure materials related to Board Meeting #257. Of particular interest are pp. 11,618-9 which were submitted by the Navy Board Member for consideration at the Meeting (submission via letter of 16 Dec 69 to Chmn,AFESB) (p. 11,620). Main Navy complaint is the requirement of DOD Manual 4145.27M, Table 7-7.2, that any amount of mass detonating explosives up to 25,000 net pounds be separated from inhabited buildings by 1460 ft. Navy requests relief from this minimum separation requirement...using $d=50W^{1/3}$ for computing distances for quantities smaller than 25,000 lbs. Letter continues and also discusses current usage of the 865 ft. minimum separation distance for Class 2 and Class 7 tables.

Table B-1 (continued)

Reference Vol/Pp/Date	Document Identification	Fact/Datum (usually abstracted and/or paraphrased)
28 11,687 22 Apr 70	Ltr from Chmn, ASESB to CNO (OP-098C)	This letter relates to interpolation of quantity-distance tables and states the following between distance increments approved at the 257th Board Meeting. For Class 2 "interpolation shall be linear and proportional" and for Class 7, "...interpolation shall be on the basis of the risk factor appropriate to the governing table with a minimum separation distance of 865 ft..." For mass detonating fragmenting munitions the minimum distance shall be 865 ft or the appropriate missile distance for the items involved, whichever is greater.
28 11,721 19 May 70	Memo for Chmn, AFESB from OASD (I+L)	Memo discusses interim change 1-3 to DOD 4145.27M and, among other things, seeming inconsistency between barricaded and unbarricaded highway distance for amounts of explosives between 5,000 and 125,000 lbs. Also suggests, for purposes of clarity and explanation, that..."philosophy of maintaining an inhabited building distance of 865 ft down to very small amount of explosives be discussed."
28 11,722 27 May 70	Memo for ASD(I+L) from Chmn, AFSEB	Memo answers memo directly above. Mentions that barricaded/unbarricaded anomaly was based on changes in 255th meeting that they plan to correct at 258th meeting. With respect to the 865 ft minimum distance specified for inhabited buildings when barricades are not present, this "...is intended to provide some degree of protection against low-angle, high velocity fragments and building debris. Further analysis is being performed...to evaluate this. On the basis of past experience and judgment, the 865 ft. distance specified is believed to be adequate for general application until detailed studies of specific weapons are completed."
29 11,723 1 Jun 70	Memo by Chmn, DDESB	Discusses Interim Change 1-4 to DOD 4145.27M. Corrects anomalies and errors inadvertently published in Change 1-3 and related to Class 7 explosives.

Table B-1 (continued)

Reference Vol/Pp/Date	Document Identification	Fact/Datum (usually abstracted and/or paraphrased)
29 11,738-40 6 July 70	Resume of 258th Meeting of AFESB, 16 June 1970	Board decided that present Charter is considered an adequate instrument to govern current operations and agreed to table a proposed revision of the Charter due to questions that will require resolution by higher authority. Paper presented to Board explaining results of a sequential detonation research program that had been performed under contract for Board and implies greater distances for some situations that now exist than had formerly been the case. Pertinent portions of the DOD safety standards dealing with detonations of this sort will be changed. A table of recommended quantity-distance standards for inhabited buildings, passenger railroads, public highways, and airfield facilities jointly used by the DOD and other organizations was presented to the Board. Table eliminates existing anomalies in present Q-D standards and the requirements for barricades where they have been shown to be ineffective against the hazards presented. Board required formation of a task group to study the application of these new distances, primarily with respect to exposures with DOD installations. Task group recommendations will be obtained and submitted to Military Departments concurrently with the presentation of the new tables for formal staffing.
29 11,741-800 16 Jun 70	Verbatim Transcript, ASESB Meeting #258	Mentioned that charter revision tabled because not enough time to iron out difficulties in ideas (using same agenda of previous Board Chairman since not enough time to do new planning). In Verbatim Transcript is included entire paper by T.A. Zaker (AFESB, Chief Explosives Scientist) Sequential Explosion Phenomena: Review and Applications (pp. 11,750-59). Many parts of meeting difficult to interpret since transcription machine off several times. Essense of meeting believed to be well summarized in Resume, above.

Table B-1 (continued)

Reference Vol/Pp/Date	Document Identification	Fact/Datum (usually abstracted and/or paraphrased)
29 11,802-9 no date listed	Tentative Revision of AFESB Charter	These draft notes were prepared for Agenda Item 1a of Meeting #258. Although this agenda item was deferred (see resume of meeting, above), these notes present ideas of the Board regarding suggested revisions of their previous charter.
29 11,844-6 no date listed	Background data for Item 1c, Meeting #258 (Sequential explosion phenomena)	On these pages is presented an abstract of a full briefing and discussion held at Meeting #258 relating to sequential explosion phenomena. These data relate to application of experimental data and theoretical results which were obtained from sequentially detonated high explosive charges. Data also presented dealing with separation of stacks of high explosive projectiles. List of references given as well as two recommendations for Board consideration.

Table B-1 (continued)

Reference Vol/Pp/Date	Document Identification	Fact/Datum (usually abstracted and/or paraphrased)
29* 11,894-916 11 Jun 70 (Repro #6)	Memo for AFESB from Chmn, AFESB	This letter, with its extremely comprehensive appendix, discusses Agenda item 2b, "anomalies with respect to interim quantity-distance standards." The inclosure to this letter is the recommended substitution for currently anomalous tables in DOD Manual 4156.27M. Agenda item 2b recommended revised tables to be included in an interim change to the subject manual. The subject of the change came about as a result of the OASD (I+L) calling attention to a number of anomalies in the existing regulations. The changes seem most significant, are detailed in the inclosure, and relate to: (1) provision of two fixed distances for all amounts of explosive up to 30,000 lbs. for the targets enumerated. This distance is required to protect against fragments and debris from most explosions but can reasonably be reduced for vehicular targets because of their reduced vulnerability. Recently received results of contract studies from typical example weapons have shown that the fragment hazard may be quite significant out to 1245 ft. This distance relationship is relatively insensitive either to barricading or the probability of a fragment strike. Charts illustrating this are attached; (2) elimination of credit for barricades. The very considerable amount of work done in the past several years to evaluate the effectiveness of barricades has conclusively shown that for distant, i.e., at or near inhabited building distances, barricades are of relatively little value for protection against either blast overpressure or fragments; (3) results of a blast vulnerability analysis study recently conducted for the Board which demonstrated that the tables shown provide an adequate degree of safety against blast overpressure for nine of a group of ten example targets considered; and (4) a suggested change that removed the marked anomalies presently existing in the quantity-distance standards that relate to the effects from large yield explosions (above 1,000,000 lbs.). Finally, a standard is listed for small quantities of explosives from targets involving only for those potential explosion sources wherein positive control is assured so there will be no projection of fragments of the ammunition, or debris from damage to the source buildings

* Material reproduced in Appendix D.

Table B-1 (continued)

Reference Vol/Pp/Date	Document Identification	Fact/Datum (usually abstracted and/or paraphrased)
From previous page	From previous page	or other structures nearby. For this purpose, conventional barricading as defined in the present standards will not be considered adequate control of fragments.
29 11,940-51a 15 Jul 70	Memo for ASD(I+L) from Chmn, ASESB	This memo purposes a change to DOD Directive 5154.4 of 25 Jul 63. The major revision is in the name of the Board (to Department of Defense from Armed Services Explosives Safety Board). Copies of the proposed directive as well as the one it is to supercede are presented as enclosures.
29 11,967-71 22 Jul 70	Memo from Chmn, AFESB to CNO (attn: OP-098)	This letter to CNO responds to a request for clarification of the viewpoint of the AFESB with respect to the citing of ammunition facilities. Location is within Naval Ordnance Facility, Sasebo, Japan. Letter clarifies previous misunderstandings relating to earlier requests involving site plans at this base.
29 11,976-84 24 Jul-31 Jul 70	Memoranda for ASA(I+L),ASN(I+L) from ASD(I+L)	These correspondences relate to berthing of ammunition ships at Bayonne, N.J. as well as plans to perform hot work on such a ship at the terminal while berthed and loaded with ammunition. Review of plans is requested as well as information related to previous correspondence on this topic.

Table B-1 (continued)

Reference Vol/Pp/Date	Document Identification	Fact/Datum (usually abstracted and/or paraphrased)
29 12,031-2 12 Aug 70	Ltr from Dir, Secretariat to Dir. DASA (SPLN)	On the topic of fragmentation data for nuclear weapons, this document presents a precise and comprehensive summary of the results of the 258th Meeting of the Board. Letter states that at referenced meeting, new quantity-distance standards were approved in principle which provide for two major departures from those now contained in DOD Manual 4145.27M; (a) elimination of credit for barricading for exposures to inhabited buildings and public traffic routes, and (b) establishment of a minimum distance, not based upon amount of high explosive, for protection from the weapon fragments and debris resulting from an explosion. A copy of the recommended quantity-distance table is attached. The elimination of credit for barricades is based upon extensive investigations over the past several years to which (DASA) has been a party. The recommended minimum distance is based in large measure upon the results of a current study being conducted by the Illinois Institute of Technology Research Institute for the ASESB. Ref. 1c was the final report of the first two phases of this study. The third phase, nearly complete, extends this study to cover the multiplication factors to be applied for events involving large numbers of units as contrasted with single round bursts.
29 12,063-73 24 Jun 70	Office Memo 3-9 AFESB signed by Chmn.	This memo related to task group to establish guidance for application of quantity-distance standards under authority of ASESB Meeting #258. This task group is to consider appropriate limitations and guidance which would be included in the necessary change to 4145.27M.

Table B-1 (continued)

Reference Vol/Pp/Date	Document Identification	Fact/Datum (usually abstracted and/or paraphrased)
29 12,074-6 8 Jul 70	Memo for Chmn, AFESB, from Task Group Meeting	This report summarizes work of the task group to establish guidance for application of quantity-distance standards. They are to consider appropriate limitations and guidance to accompany the proposed new tables for protection of inhabited buildings, public highways, and passenger railroads, plus aircraft runways which were submitted to the Board at its 258th meeting. New definitions and the rationale for changes are presented. Para. 3-3.C is to be rewritten to provide that fragment protection shall be provided in accordance with known or reasonably predictable characteristics of the weapons involved. In particular cases, if the fragment hazard from a specific weapon and environment can be shown to be less than the minimum stated in the proposed table, credit may be taken for this fact. Contrary-wise, in certain specific situations, a particular weapon with optimum fragmentation characteristics will produce a fragment hazard beyond the stated minimum. If this is true the appropriate distance for the particular weapon involved will become the applicable minimum for this case. It is noted that the difference between 1235 ft. and 1245 ft. is so slight that is probably beyond the accuracy of the work done to legitimately differentiate between the two...so the specified minimum distance should be retained as 1235 ft. and continued through 30,000 lbs. of high explosives ...even though this will create a very slight anomaly in the table at this point (30,000 lbs.). The note following the proposed supplemental table for small quantities when fragment hazards can be controlled should be revised to read: "This table may only be used for separation from potential explosion sources wherein positive control is assured so that the fragment hazard at the distance specified in column will be no greater than a probability of 0.001 of unacceptable damage to the targets considered. For this purpose, conventional barricading or use of standard igloos will not necessarily accomplish adequate control of fragments. Finally, it is recommended that applicable DOD standards relative to hazard evaluation...including NAVORDINST 8020.3...be revised to require

Table B-1 (continued)

Reference Vol/Pp/Date	Document Identification	Fact/Datum (usually abstracted and/or paraphrased)
From previous page	From previous page	inclusion of the necessary analysis, computation, and tests for given weapons or weapon types to enable the using organizations to effectively evaluate the situations cited above. The task group recommended that these changes be included with the proposed table and submitted for formal staffing as an interim change to DOD 4145.27M.
29 12,077-[illegible]07 21 Oct 70	Memo for AFESB Service Member from Chmn, AFESB	Memo discussed proposed interim change 1-5 to DOD Manual 4145.27M which revises the Class 7 inhabited building and public traffic route distance. Change also includes guidance for the application of quantity-distance standards that were developed by the special task group established by the AFESB. Memo listed changes that have been detailed above and asks for Service comments by given date.
[illegible] [illegible]8 [illegible] 70	Ltr from Navy Alternate AFESB Member to Chmn	This letter states, on subject of Proposed Interim Change 1-5 to DOD Manual 4145.27M, that subject change as submitted is acceptable subject to one minor modification (table misnumber).
29 12,109 13 Nov 70	Ltr from HQ, USAF (IGDSGE) to Chmn, AFESB	AF says they are gathering data from major commands concerning impact of proposed interim change 1-5 to DOD Manual 4145.27M. They expect to be able to forward comments to Board by 15 Feb.
29 12,110 29 Dec 70	Ltr from CDCOS Army (Logistics) to Chmn, AFESB	With respect to the proposed Interim Change 1-5 to DOD Manual 4145.27M, Department of the Army states that they concur with the subject proposal.
29 12,110a 6 Aug 70	Memo for ASA(I+L) from ASN(I+L)	Regarding berthing of ammunition ships at Bayonne, N.J., memo states that Navy has reviewed its proposal to undertake welding operations on ...ship...while loaded with ammunition and has changed its mind regarding doing such work in originally proposed fashion.

Table B-1 (continued)

Reference Vol/Pp/Date	Document Identification	Fact/Datum (usually abstracted and/or paraphrased)
29 12,110b 25 Aug 70	Memo for ASD(I+L) from ASN(I+L)	With respect to berthing of ammunition ships at Bayonne, N.J. memo states that recent ship retirements as well as revisions in the ship-building program will require reassessment of AE homeport assignments on the East Coast. When completed further information will be forwarded to ASD (I+L).
30 12,127-8 29 Oct 70	Memo for ASD(I+M) from Chmn, DDESB	This memo contains a preliminary listing of DOD Directives, Instructions, and Memoranda under Explosives Safety Board cognizance and the Chairman's recommendation for each issuance.
30 12,129-30 4 Nov 70	Memo for SECNAV from Chmn, DDESB	This memo listed unsafe conditions at the US Naval Submarine Base, New London, Conn. Violations related primarily to quantity-distance standards for explosives aboard the Base.
30 12,320-9 20 Jan 71	Memo for OSD(I+L) from DDESB	This memo transmitted a draft copy of the proposed Charter revision of DOD Directive 5154.4 relating to the DDESB. It contains appropriate definitions, lists of functions and responsibilities, authority, and administrative information.
30 12,440 15 Apr 71	Memo for AFESB from Chmn	In this resume of the 260th Meeting of the Board the following important decisions are listed: (1) acceptance of Interim Change 1-5 modified to provide that "when test or accident data are available to justify it, Class 7 ammunition and explosives will be additionally grouped into distance zones used for non-mass detonating items, i.e., 400, 800, 1200, and 1800 ft.; (2) the following definitions shall be used in calculations of fragmentation hazards: (a) a hazardous fragment is one having an impact energy of 58 ft/lbs or greater and (b) an acceptable density of hazardous fragments is one or less per 600 sq. ft." Other items not relevant.

Table B-1 (continued)

Reference Vol/Pp/Date	Document Identification	Fact/Datum (usually abstracted and/or paraphrased)
30 12,441-2 10 May 71	Memo for AFESB from Chairman (Resume of 260th Meeting of ASESB)	This memorandum amplified the above-referenced memo regarding activities of the 260th Meeting of the Board. Items relevant to the subject topic include (item #3) an extensive Air Force briefing on the U.S. Air Force position with respect to the adoption of quantity-distance standards proposed in Interim Change 1-5 to DOD Manual 4145.27M; (item #4) The Secretariat's summary of the reasons for recommending minimum distances to protect against fragments from mass detonating ammunition. This included discussion of the different problems presented by fragment hazards to exposed personnel as compared with inhabited building protection against blast; (item #5) Board was briefed on the relationship between U.S. and NATO criteria and the important differences between them; (item #6) Board voted unanimously to accept definitions of hazardous fragment and acceptable density of hazardous fragments and also, in lieu of minimum distances for inhabited buildings, public highways, and passenger railroads, distances zones similar to those used for non-mass detonating items (400, 800, 1200, and 1800 ft).

Table B-1 (continued)

Reference Vol/Pp/Date	Document Identification	Fact/Datum (usually abstracted and/or paraphrased)
30 12,443-533 14 Apr 71	Verbatim Transcript, ASESB Meeting #260	Items that seem of special interest related to the highlights noted directly above are listed below, along with the page reference. (p. 12,463) Secretariat member mentions that for a number of years ...Board has tried to get some sort of a handle on the problem of fragmentation hazard. (p. 12,464) Mentions further the 58 ft-lbs rationale. States that it is test measurable and has been accepted for years in the U.S., U.K., and Germany. Also mentions reference to "Wound Ballistics" published by the Medical Department, U.S. Army. (p. 12,467) Mentions background of the one fragment per 600 sq ft criterion and states that it gave (reference given) one chance in 450 of serious injury to one unprotected person standing in this region. (p. 12,468) Chairman, ASESB, states that if the interim change 1-5 is approved today,...the Services will have...the 1235 ft. as an interim guide, not as a mandatory operation because we have nothing better right now. (p. 12,469) Gives rationale for the 1235 nominal minimum distance to inhabited targets. Was based on recommendation by Board staff from 1945 to 1950 based on accident data then available. Independent of that and without reference to it, recent calculations (unspecified) indicated a sharp cutoff of the fragment pattern in the vicinity of 1150 and 1250 ft for several typical munitions. (p. 12,477) Air Force Member states that he thinks hang-up is having the same distance applying from 0-30,000 lbs and he thinks there ought to be some graduation from within this range. (p. 12,489) Alternate Army Member suggests how 1235 ft criterion was gotten. He believes it is associated ...with that point where 30,000 pounds of explosives reaches a factor where the blast hazard and the fragment hazard are almost the same. (p. 12,495) Board Chairman states that the 1235 distance will be primarily applicable to those cases in which no determination has been made as to the fragment range and density. But others present indicate that they believe that no determination has been made in most (over 90%) of cases. (p. 12,521) Board votes unanimously in accepting change 1-5, less

Table B-1 (continued)

Reference Vol/Pp/Date	Document Identification	Fact/Datum (usually abstracted and/or paraphrased)
From previous page	From previous page	the 1235 ft distance provision. It is agreed that this topic will be brought up at the next meeting.
31* 12,534-40 10 Feb 71 (REPRO #7)	Ltr from USAF, Dir of Aerospace Safety to Chmn, ASESB	Letter deals with proposed Interim Change 1-5 to DOD Manual 4145.27M that dealt with proposed changes to DOD explosives quantity-distance criteria. Attached study on pp. 12,534-39 presents an excellent review of the magnitude of the impact of these criteria on the Air Force. Study summarizes problem, factors bearing on the problem, discussion, and conclusions. Air Force recommends that the proposed changes in fragmentation criteria should not be adopted at this time.
31* 12,541-5 no date given (14 Apr 71 according to Private Communication, Dr. T. Zaker 5 Jan 77) (REPRO #8)	Definitions of terms relating to fragments: Misfiled data from 260th Meeting of ASESB (see below)	Definitions which were developed during ASESB Meeting #260 held on 15 Apr 71 were inadvertently filed on these pages (see references). These very significant pages were produced during the course of Meeting #260 of the ASESB and present a Board-agreed definition of hazardous fragment (p. 12,541), rationale for 1235-foot nominal minimum distance to inhabited targets (p. 12,542), rationale for 58 ft-lbs (p. 12,543), and rationale for one fragment strike per 600 sq ft (p. 12,544). Also given (p. 12,545) is the recommendation regarding interim change 1-5 which suggests text revision to specifically provide that...the 1235-ft distance will be primarily applicable to those cases in which no determination has been made as to the fragment range and density.

* Material reproduced in Appendix D.

Table B-1 (continued)

Reference Vol/Pp/Date	Document Identification	Fact/Datum (usually abstracted and/or paraphrased)
31* 12,602-3 4 May 71 (REPRO #9)	Memo for Members, ASESB from Chmn, ASESB	This memorandum relates to protection from fragments and debris resulting from explosions and summarizes and transmits information which the DDESB unanimously adopted at its 260th meeting. Included are the definitions of hazardous fragment and acceptable density cited above as well as information relating to the distance zones (400, 800, 1200, and 1800 ft) into which fragments of small to moderate quantities of Class 7 ammunition will be grouped if fragment protection distances are not presently tabulated.
31 12,744-6 1 Oct 71	Memo from Chmn, ASESB to DASD (I+L)	Memo relates to berthing of ammunition ships. This memo makes reference to the ASN(I+L) memo to ASD(I+L) of 12 July 71, same subject as above, and discusses difficulties Navy has been having meeting quantity-distance regulations and standards.
31 12,784-93 23 Oct 71	DOD Directive 5154.4	Presents directive. No additional explanations presented.

* Material reproduced in Appendix D.

Table B-1 (continued)

Reference Vol/Pp/Date	Document Identification	Fact/Datum (usually abstracted and/or paraphrased)
31 12,834-8 13 Jan 72	Significant Activities of ASESB for 1971	Significant items of relevance to this project are noted. (p. 12,837 --p. 3 of document, item #4): Under DDESB Technical Program (sub-item d, Fragment Hazards) states that under a continuation of an existing contract with IITRI, analyses were performed, using a digital computer program developed in previous work, to predict the fragment fields and resulting hazards to exposed persons from explosions of individual rounds of 7 types of artillery projectiles and GP bombs. This effort is aimed at determining safe distances from stores of fragment producing ammunition. The final technical report on this phase of the work in now in preparation. (Under item 4, sub-item e, Explosion Effects Computation Aids) In Nov 71, work was begun at General American Research Div., GAT Corp, to develop tables, charts, and a hand held calculator for rapid estimation of the effects, in terms of human injury and property damage, of accidental explosions in stores of conventional ammunition.
31 12,839-40 19 Jan 72	Memo from Air Force to DDESB, NAVORD to DDESB	Both of these memoranda relate to protection from fragments and debris resulting from explosions and reference the Jun 8, 71 memo to themselves from DDESB (see p. 12,602).
32 12,898 6 Apr 72	Memo for ASESB, Agenda for Meeting #261 (24 Apr)	Under Agenda Item 2c, this document recommended changes to DOD Manual 4145.27M in order to supplement the blast hazard distance table (shown as incl. 2).

Table B-1 (continued)

Reference Vol/Pp/Date	Document Identification	Fact/Datum (usually abstracted and/or paraphrased)
32 12,899 10 May 72	Memo for Record dealing with Resume of 261st meeting of ESB (from Chmn, ESB)	Under item 2b, Fragmentation Hazards for Mass Detonating Ammunition. The results of a computation program were reported and made of record to show the distances which would be required for seven example munitions items to comply with the fragmentation standards adopted at the 260th meeting, namely: (1) a hazardous fragment is one having an impact energy of 58 ft-lb or greater; (2) an acceptable density of hazardous fragment is one or less per 600 sq ft.
32 12,900 10 May 72	Same as above	The approved change to the standard provided minimum distances for the Class 7 quantity-distance table for the specific items studied and includes authorization to use analogies for determining appropriate minima when sufficiently similar ammunition items are being considered.
32 12,906 24 Apr 72	ASESB Meeting #261 Verbatim Transcripts	Verbatim transcripts refers to specific tests conducted on 7 weapons (750# bomb, 500# bomb, 175mm projectile, 155mm projectile, 105mm projectile, 8" projectile, and 5" projectile.)
32 12,927 26 Apr 72	Memo to Asst SECDEF(I&H) from Chmn, DDESB	All agenda items described below were concurred in unanimously by the voting members: (under item b) Fragmentation Hazards from Mass Detonating Explosions. This action established fragmentation standards for certain ammunition items that will, in effect, provide protection to exposed personnel when the range of hazardous fragments is greater than the distance required for air blast protection.
32 12,939 24 Mar 72	Memo to Board from Chmn, ESB	Inclosure 2 (fragment hazards to unprotected personnel) summarized work done in referenced memo.
32 12,940-4 24 Mar 72	Memo to Board from Chmn, ESB	Table 5-6.4a gives minimum distances for selected class 7 items (see item #32, p. 12,906, above, this page) in units of 1, 2, 5, and 10. On p. 12944.

Table B-1 (continued)

Reference Vol/Pp/Date	Document Identification	Fact/Datum (usually abstracted and/or paraphrased)
32 12,992 30 May 72	Memo to CNO from Chmn, DDESB	This memo discusses application of explosive safety standards for the Navy. It refers specifically to the loading, off-loading, stowage, or shifting of ammunition or explosives stored aboard ship. It states that the result of recent DDESB surveys of U.S. Naval Stations clearly indicate that OPNAVINST 8023.10 of 23 June 61 is inadequate to prevent concentrations of explosives from reaching catastrophic proportions because, with the present lack of controls, management cannot determine the magnitude of the area being hazarded nor the overall impact should an explosion occur. It recommends that OPNAVINST 8023.10 be revised as appropriate to insert the following: a. Each ship (inc. tenders, ...etc.) be required to maintain current information on the net explosives weight (NEW) aboard.
32 12,993 30 May 72	Same as above	Item b. of this memo states that the total NEW aboard all ships and on the piers which might be subject to mass detonation simultaneously or in rapid sequence, will be totaled to determine potential explosive hazard zones. Further details safety steps specified. Item c. states that the realistic impact of an explosion on the military installation, mission capability, etc. must be determined in advance. And item d., that strategic and impelling reasons to justify such risk before granting any waivers must be in hand. It further lists the additional safety precautions that must be followed when such waivers have been granted.
32 13,031d-x 28 June 72	Proposed DOD Instruction	This DODINST related to accident reporting policy for ammunition, explosives, chemical agents and associated weapon systems. It is to supercede and cancel DODINST 7730.12, on a similar topic area.

Table B-1 (continued)

Reference Vol/Pp/Date	Document Identification	Fact/Datum (usually abstracted and/or paraphrased)
32 13,141-8 8 Jan 73 (13,146)	Memo for Dep ASD(I+H) from Chairman, DDESB	This yearly memo details significant activities of the DDESB in 1972. On p. 13,146, under explosives safety standards (item 5, sub a) the memo mentions the extension of fragment hazard actions taken in 71 to provide definitive minimum distances to 7 mass detonating systems (see p. 12,906, ref'd. on previous page).
32 13,147 8 Jan 73	Same as above	Mentions consolidation and editing into a proposed single volume DOD standard containing all of the explosives safety criteria the Board has issued to date. These were previously in two separate manuals, one for contractor operations and one for DOD-wide application.
32 13,229-30A 9 Apr 73 (also 5 Jul 73)	Memo to SECDEF (General Counsel/logistics) from Chmn, DDESB and response	On the subject of waivers of explosives safety standards by DOD components, this memo indicates that the discretion to grant waivers has in some instances been abused. This topic is treated at great length and in considerable detail. (response is dated 5 Jul 73.)
32 13,231-2 10 Apr 73	Memo for Board members from Chmn, DDESB	This memo discussed briefly some possible objections to issuing DOD 5154.4S as a combined manual. Subject proposed standards are still in discussion stage at present.
33 13,401-3 22 Jun 73 & 13 Jul 73 (reply)	Memo for Chmn, DDESB from ESB members & reply (later date)	This memorandum authorized waivers of ammunition and explosives safety standards. The memo and reply (later date) briefly discusses types of reports of explosives safety surveys of military installations.
33 14,498-599 5-7 Nov 73	Pp classified CONFIDENTIAL	Subject of these pages (101 in all) is Navy tenders.

Table B-1 (continued)

Reference Vol/Pp/Date	Document Identification	Fact/Datum (usually abstracted and/or paraphrased)
33 14,602-4 18 Sep 73	Joint message form from DDESB	Survey of tender munition facilities and operations at Norfolk, Va. (NORVA). Message to AS 36 and AD 38.
33 14,605-8 28 Sep 73	Naval message from CNO to CHNAVMAT, CINC-LANTFLT	Describes program and schedules to discuss Navy-requested revision to DOD Explosives Safety Standards such that munitions aboard AD/AS are exempt from application of ESQD requirements.
33 14,609-611 5 Nov 73	Agenda of 264th meeting of ESB from Chmn, DDESB to Board members	First question will be Navy request for exemption from application of ESQD standards to tenders. Presentation by Board staff; past history of exemption considerations; present practices and situations regarding tenders; problem areas envisioned in the exemption.
33 14,612 18 Sep 73	Memo for Chmn, DDESB from Asst SECDEF (I+L)	Memorandum discusses exemption for Navy from application of ESQD standards.
33 14,613-20 12 Sep 73	Memo for SECDEF with SECNAV	With respect to the Navy exemption from application of current ESQD standards, the Navy proposes revising para. 7-2B to read: "These standards are not applicable to ammunition or explosives stored in ships' magazines. They do, however, apply to the loading, off-loading, stowing, or shifting of such ammunition or explosives."
33 14,622-24 25 Sep 73	Memo from Chmn, DDESB for CNO	Chairman, DDESB says he will call a meeting to discuss the requested Navy exemption for application of ESQD standards.

Table B-1 (continued)

Reference Vol/Pp/Date	Document Identification	Fact/Datum (usually abstracted and/or paraphrased)
33 14,625-6 4 Oct 73	Memo from Chmn, DDESB to Asst SECDEF (I+L)	With respect to same topic as directly above, Chairman, DDESB, suggests that Navy follow technical and test data path in solving tender Q-D problem.
33 14,627 5 Oct 73	Memo from DDESB to Asst SECDEF (I+L)	Chairman, DDESB, sets up meeting schedule to discuss the requested Navy exemption for application of ESQD standards.
33 14,628-9 7 Nov 73	Memo from DDESB for Asst SECDEF (I+L)	With respect to same topic as above, this memo presents Board recommendations, viz., that have the effect of reducing munitions functions by tenders in port by limiting tender operations to: (a) receipt and issue of warshot torpedoes and missiles; (b) maintenance, assembly, and overhaul of exercise torpedoes and missiles; and (c) operations required to maintain readiness of nuclear weapons, when assigned.
33 14,630 1 Dec 73	Memo for SECNAV from Dept Asst SECDEF (I+L)	Discusses application of ESQD to destroyers and submarine tenders. Summarizes DDESB finding that ESQD should continue to be applied to tenders, and that, where these distances cannot be met, the operations of tenders should be appropriately limited. Also contains classified enclosure dtd 3 Dec 73 (91 pp).
34 14,656-82 no date given (most of material here on p.14,676)	Presentation to DDESB on AS/AD by J. Schell, NAVSEC 6105	Extremely comprehensive document. Lists sequence of events relating to Application of Pier and Wharf Standard to Navy Ships: (8/64) BUWEPS requested exemption of "combatant ships" applied standards to AE's, AD's, AS's, AV's, and AVP's; (10/64) Meeting #229 of Board approved essentially the present standard; (10/66) Board objected to tender location at New London; (2/68) Board objected to tender at Key West; (11/69) Navy applied Q-D to tender at Guam; (11/72) ASD(I+L) recommended application of Q-D to AE's; (9/73) SECNAV letter to SECDEF recommended AD's and AS's be exempt.

Table B-1 (continued)

Reference Vol/Pp/Date	Document Identification	Fact/Datum (usually abstracted and/or paraphrased)
34 14,677 no date given	same as above	Historically Board Standards have been based on reduction of damage if and when an explosion occurred. They have not been based upon the probability, or lack of it, of the explosion occurring in the first place.
34 14,678 no date given	same as above	1964 Navy recommendation relating to commissioned ammunition ships (AE) and tenders (AD, AS, AV, AVP): The standards contained herein are applicable while cargo ammunition is being handled, i.e., loaded, off-loaded, stowed or shifted. (N.B., battening, bracing, or strapping) More information also presented.
34 14,683-737 8 Nov 73	Verbatim Transcript DDESB Meeting #265	Discussion of changes to replace in its entirely DOD Manual 4145.27M by DOD 5154.4S. Very comprehensive.
34 14,757 6 Sep 73	Memo from Chmn. DDESB to Board members	Proposed DOD Standard, DOD 5154.4S. DOD Ammunition and Explosives Safety Standards. General and detailed discussion on changes to the standard.
34 14,775-83 17 Oct 73 (Table referred to is on p.14,779)	Ltr from Deputy Chief, Safety Operations Division, Directorate of Aerospace Safety, USAF to Chmn, DDESB	On topic listed directly above, discusses Air Force objections to using minimum of 1235' for both barricaded and unbarricaded facilities. Requests that Board consider adopting enclosed table of distances (rationale cited). Table enclosed goes from 40' (barricaded) and 400' (unbarricaded) at 0-1 net lbs. explosives in 32 steps to 1245' (both barricaded and unbarricaded) for 25,000-30,000 net lbs explosives.

Table B-1 (continued)

Reference Vol/Pp/Date	Document Identification	Fact/Datum (usually abstracted and/or paraphrased)
34 14,837 3 Dec 73	Meeting of Hazard Classification/Compatability Work Group	Discusses future work of this group to implement recommendation for a compatibility grouping similar to that adopted by NATO and UNO. System was approved by DDESB formally at 265th Meeting, 8 Nov 73.
34 14,888-96 14 Jan 74	Memo from Chmn, DDESB to Deputy Asst SECDEF(I+H)	Significant Activities of DDESB for 1973 listed. Under (2c): At 264th Meeting, after briefing by U.S. Navy and on-site review, recommended that two ships (AS, AD) at Norfolk (Va.) be berthed at locations providing the greatest practical degree of protection from explosives incidents to the surroundings. Item also recommended that the DOD Ammunition and Explosives Safety Standards (DOD 4145.27M) not be changed to exempt tenders as requested by SECNAV. (2d) This item, referring to the 265th Meeting of the Board, considered the revision to the DOD Safety Standards 5154.4S as proposed by the Staff and referred the revised standards to the 3 Services for concurrence.
34 14,890-1 14 Jan 74	Same as above	(Under the Survey Program item b, above subject) it is mentioned that a recapitulation of survey findings during the period of report revealed that the Navy continues to have hazardous situations of concern to this Board. (underlined in original) Generally, it would appear that the level of risk assumed by the Navy at its coastal facilities is greater than the level of risk accepted at inland installations. This was evidenced by: (1) violation of explosives safety quantity-distance that exists between the ammunition and handling piers, tender berths, and inhabited buildings at the Naval Station, Mayport, Fla.; (2) concentration of "high rise" BOQ and EMQ facilities within the hazard zone of a tender at the Submarine Support Facility, San Diego, Cal.; (3) exposure to on and/or off-station personnel, equipment, and facilities at several installations from large quantities of explosives by the improper computation of net explosives weight aboard destroyer and submarine tenders and by the berthing and homeporting plan of commissioned ammunition ships.

Table B-1 (continued)

Reference Vol/Pp/Date	Document Identification	Fact/Datum (usually abstracted and/or paraphrased)
34 14,894-5 14 Jan 74	Same as above	(Under Explosives Safety Standards, item b) discussed rewriting of DOD Directive 5154.4 dtd 23 Oct 71 into DOD Standard 5154.4S. Standard incorporates recent Board approval of new fragmentation standards ...revised separation distances for piers and wharves based upon the results of explosion communication studies...(Item c) states that the proposed Standard also contains a uniform storage compatibility group as consistent as possible with respect to proposed international classifications for the storage and transport of dangerous goods (UNO, IMCO, NATO)...(Item e) indicates in-depth review of the application of ammunition and explosives quantity-distance standards to Navy destroyer and submarine tenders. The Navy Dept. had requested that these classes of ships be exempted from the quantity-distance standards applicable to piers and wharves for explosives handling. The review included on-site survey of two tender berthing locations by the Chmn, Board members, and appropriate Secretariat representatives. Formal Board decision was unanimous that the tenders be subject to quantity-distance requirements. If adequate Q-D is not available at this berthing location, maintenance, assembly, overhaul, and major transfer of explosive allowance should not be permitted.
34 14,896 14 Jan 74	Same as above	(Under Hazard Classification/Compatibility Work Group) This work group completed its work on the compatitiblity grouping of ammunition and explosives based upon the UN recommendations. This compatibility grouping was approved for adoption by the Defense Department during the 265th Board meeting and is included in DOD Standard 5154.4S now in final stages of coordination.

Table B-1 (continued)

Reference Vol/Pp/Date	Document Identification	Fact/Datum (usually abstracted and/or paraphrased)
34 14,897-906 17 Jan 74	Memo from Chmn, AFESB to Board members	Discusses explosives safety reviews of new contruction siting. Mentions conflict situation (p. 14,898) where in a MILCON case the Navy indicated they would issue an explosives safety waiver and direct the construction in direct opposition to the Chairman's disapproval of the MILCON. As a result, DOD support for the MILCON funding was withdrawn until the Navy conformed to the explosives safety standards.
34 14,918 8 Feb 74 (also 14,919 of 14 Feb 74 & 14,920 of 15 Feb 74	Letter from Army DDESB member to Chmn, DDESB (also Navy and Air Force member to Chmn, DDESB)	Involves the topic of explosives safety review of new construction siting. These three letters contain comments by respective Board members essentially expressing agreement with the idea that the Chmn, alone, can rule on new construction siting; and in the event of disagreement by the Board members a meeting can be called.
34 14,921-2 7 Feb 74	Ltr from DDESB to Dep.COS(Logistic) (Army)/CNO/COS USAF(IGD/AFISC/ SEV)	Regarding the Department of Transportation Hazard Information System, this letter discusses the advisability of DOT regulations dealing with transport of DOD ammunitions and explosives. Difficulty with the DOT regulations is that they do not incorporate recommendations of the UN and IMCO (Intergovernmental Maritime Consultive Organization). The UN compatibility tables have been accepted by all NATO countries and DOD for the storage of military ammunition and explosives.
34 14,923-27 13 Beb 74	Fm Chmn, DDESB, to members DDESB: a memorandum	On the topic of hazard classification of ammunition and explosives, this memo discusses adoption of UNO recommended hazard classification system in lieu of the present DOD system. Such usage would be a step closer to a single system of classification in both storage and transport.

Table B-1 (continued)

Reference Vol/Pp/Date	Document Identification	Fact/Datum (usually abstracted and/or paraphrased)
34 14,963-6 1 June 73	Ltr from CNO (Logistics to COS Army)	On the topic of ship homeport, this letter discusses the assignment of commissioned fleet ammunition ships (AE's) to homeport and the difficulties in meeting safety requirements relating to military explosives.
34 14,989 no date	Marked "Tab A"	Relates to separation distances recommended for explosive loading piers.
34 14,990 no date	Marked "Tab B"	Relates to separation distances between ammunition ships if the contents are not to be totalled.
34 14,991 25 Feb 74	DDESB Memo to ASD(M+RA)	With respect to hazard classification of ammunition and explosives: relates and expands on 7 Feb 74 ltr above (pp. 14,921 to 14,922)
34 14,994-5 1 Mar 74	Memo from Chmn to DCNO (Logistics)	Discusses possible application of suppressive shielding for control of explosion hazards aboard tenders. Memo suggests that suppressive shielding might help alleviate a Navy problem by eliminating risk of communication of explosion from workshop spaces to the much larger quantities of explosives in magazines containing warheads, warshop torpedoes, or missiles.
34 15,001-2 7 Mar 74	Memo from Chmn for General Counsel, Office, SECDEF	With regard to the confidentiality of minutes of DDESB formal meetings, this memo discusses unclassified subject confidentiality and whether they can be kept from being released or otherwise held privileged.
35 15,037-8 22 Feb 74	Ltr from Chmn, DDESB to SECNAV	This explosives safety survey of Naval Station, San Diego, Calif. mentions that Q-D criteria are not being applied to destroyer tenders homeported and berthed there.

Table B-1 (continued)

Reference Vol/Pp/Date	Document Identification	Fact/Datum (usually abstracted and/or paraphrased)
35 15,158-9 18 Mar 74	Ltr from CNO to Chmn, DDESB	With regard to the explosives safety survey of Naval activities in the San Diego area (note item directly above plus explosives safety survey of Naval Supply Center, San Diego, Point Loma Annex ref. pp 15,039-40, Vol. 35, and explosives safety survey of Navy Submarine Support Facility, San Diego, ref, pp. 15,041-15,042, Vol. 35): this letter rebuts the conclusions of the above-mentioned explosives safety surveys with respect to tender operations in the subject area.
35 15,193 2 Apr 74	Memo fm HQ, USAF, IGD(AFISC/SEV) to Chmn, DDESB	Discusses development of a proposed weapons sensitivity handbook. Further, it suggests the preparation of tables for fragment and overpressure hazards to people and facilities. Also suggests that these tables be published as part of a damage assessment chapter in 5154.4S.
35 15,194 18 Apr 74	Memo from Chmn, DDESB to HQ, USAF Dir Aerospace Safety IGD (AFISC/SEV)	Memo discusses development of defense explosives safety standards. States that suggestion of p. 15,194 is being poorly implemented for several specific weapons.
35 15,202-5 10 May 74	Memo to Chmn, ESB from DOD Asst Gen Counsel (Logistics)	Discusses confidentiality of minutes of DDESB formal meetings. With respect to Vol. 34 (pp. 15,001-2) breaks subject topic down into 3 sections involving (a) doctrinal material, (b) material that was obtained when sources were assured privileged nature, and (c) candid Board member comments. Treats each separately.
35 15,223-9* 20 May 74 (Repro #10)	Info on DDESB TDY fundings	This memorandum was of interest because it provided a compact, comprehensive summary (see part 2) of the history of the DDESB, including important affirmations and additions to the responsibilities of the Board (see 2,(4),b).

*Material reproduced in Appendix D.

Table B-1 (continued)

Reference Vol/Pp/Date	Document Identification	Fact/Datum (usually abstracted and/or paraphrased)
35 15,240-67 28 Jun 74	DDESB Meeting #268	Quantity-Distance rules are mentioned in this meeting, primarily in connection with Air Force project which requested a waiver for 1235 ft. criterion. Long discussion follows of specifics of request--but general problem is cost limits to acquiring more real estate coupled with increased quantities of ammunition being handled.
35 15,268 28 Jan 74	Ltr from Chmn, DDESB to CIC USAF, Pacific	Summarized Meeting #268 vote granting waiver to quantity-distance rule but disapproving other requests.
35 15,296-7 15-29 Jul 74	Memo from CNO for Chmn, DDESB	Survey of San Diego Munitions handling facilities by DDESB, 15-19 July is topic. Summarized visit by Board members and describes good and bad points of subject area studied.
35 15,298 17 Jul 74	Memo for ASN(I+L) from ASD(I+L)	Memo discusses homeporting of commissioned naval ammunition cargo ships. Memo, in answering 27 Nov 73 memo, described number and location of AE's that will be homeported on East and West Coasts.
35 15,322 13 Aug 74	Ltr from CNO to Chmn, DDESB	Letter discusses survey of San Diego munitions handling facilities by DDESB, 15-19 July 1974. Mentions that ammunition and hazardous materials handling (AMHAZ) Board is being convened by Office of CNO to review comments and recommendations of 29 July 74 DDESB memo (see pp. 15,296,7).
35 15,329-30 4 Jun 74	Letter from Chmn, DDESB to Dir,DNA	This letter presents comments and recommendations of a draft manual dealing with DOD special ammunition storage sites.
35 15,331-2 5 Sep 74	Same as above	Further comments on draft manual 5210.41M dealing with DOD special ammunition storage sites. P. 15,332 (para. 11) says in Figures 7-11 through 7-14 that quantity-distance notes should be revised to agree with DOD Standard 5154.4S.

Table B-1 (continued)

Reference Vol/Pp/Date	Document Identification	Fact/Datum (usually abstracted and/or paraphrased)
35 15,344-5 19 Sep 74	Memo for Board Members from Chmn, DDESB	This memo is a request for approval to publish an explosion effects calculator. It discusses production and distribution of the calculator and manual as two elements of a joint publication of the DOD components.
35 15,346-7 19 Sep 74	Memo for Board Members from Chmn DDESB	This memo discusses relevant items related to DOD Standard 5154.4S (DOD Ammunition and Explosives Safety Standards) of July 74. One item discusses resolution related to the establishment of a hazard classification system compatible with that recommended by the UNO. Another item suggests a substantive change in the quantity-distance standards (see para. 5-2F) which specifies a 1250 ft. minimum distance for class 1, Division 1 explosive items which have not been thoroughly evaluated in accordance with para. 3-3C/a of DOD Standard 5154.4S. The existing requirement to group mass-detonating items into 400, 800, 1200 and 1800 ft. distance zones has been found to be unworkable (memo states). A rationale for the proposed change was to be attached as Inclosure 2 (but was not).
35 15,411-2 18 Dec 74	Memo from Chmn Board Members, DDESB	Discusses DOD Standard 5154.4S of July 74 and notes that the proposed hazard classification system based on UN recommendations have been modified by the UN with respect to Class 1, Division 4. The change removes certain items containing small amounts of explosives from UN Class 1. A new subparagraph 5-6B is shown on p. 15,412.
36 15,459-68 21 Jan 75	Memo from Chmn, DDESB for DASD (I+H)	This memo lists significant activities of the DDESB for CY 74. Items of special note from this document are listed below. Under Board Mtgs and Decisions, (a) DDESB Memo, 5 Mar 74 (q.v.) reaffirmed policy that Chmn, acting in name of Board, will continue to approve/disapprove construction site plans from a safety viewpoint, and (b) 267th Meeting, 6-7 Mar 74; 268th Meeting, 28 Jun 74.

Table B-1 (continued)

Reference Vol/Pp/Date	Document Identification	Fact/Datum (usually abstracted and/or paraphrased)
36 15,462 21 Jan 75	Memo from Chmn, DDESB for DASD (I+H)	3. Operations Division Activities:...(b) a recapitulation of survey findings during the period...revealed that the Navy continues to have hazardous situations of concern to Board. Generally, it would appear that the level of risk assumed by the Navy at its coastal facilities is greater...than at inland installations. This is due to (1) violations of esq-d rules..., (2) proposed construction of facilities within the hazard zone..., (3) exposure to on and/or off-station personnel, equipment, and facilities from large quantities of explosives aboard destroyer and submarine tenders.
36 15,463 21 Jan 75	Same as above	4. Technical Programs. Under (a), Establishment of Standards: (1) final coordination achieved on DOD Explosives Safety Standard 5154.4S..replacing 4145.27M. Additions still being made; (2) work has started on review of the DOD Contractors' Safety Manual for ammunition, explosives, and related dangerous articles.
36 15,464 21 Jan 75	Same as above	Two temporary working groups were established: (1) hazard classification compatibility; and (2) explosives accident reporting working group.
36 15,465-6 21 Jan 75	Same as above	Under item d. (RDT&E Program), (5) In 5/74 the Board authorized a program of 6 tests to determine the fragmentation characteristics of above-ground stacks of 500 lb bombs as a function of stack size, layout being 50.
36 15,549-791 18,19,21,24 Feb 75 (esp. p. 15,554)	Meeting #269, DDESB	At the Navy's request this meeting was held to discuss construction projects at NAVSTA, Charleston, S.C. Navy's discussion of its masterplan and hopes of revising some of the Board's instructions, especially from 1967 to Jan 1975 (see p. 15,554).

Table B-1 (continued)

Reference Vol/Pp/Date	Document Identification	Fact/Datum (usually abstracted and/or paraphrased)
36 15,556 18-24 Feb 75	Meeting #269 DDESB	The present Charleston, S.C. complex master plan was prepared in the 1970-71 time frame and approved by CNO on Feb 72. Explosives safety requirements at the time called for 920's of separation distance to inhabited buildings for 30,000 lbs of class 7 explosives handled at the piers. Plan was predicated on the assumption that the current safety criteria would remain stable...Early in 73 criteria changes were made requiring 1235' for handling net explosives weights ranging from 0 to 30,000 lbs...More recently the question of whether or not submarine and destroyer tenders supporting weapons maintenance ships generate arcs equal to their full explosives load has been raised by the DDESB. If this issue is resolved in favor of considering the total load, arcs may have to be struck for a distance of 2360'.
36 15,562 18-24 Feb 75	Same as above	Chmn, DDESB, asked NAVFAC's representative to elaborate on the 920' that was used for the previous master plan. Response was that at that time (ca. 1966) there was a sliding scale for class 7 materials. When they had 30,000 lbs. it gave them 920'.
36 15,563-86 18-24 Feb 75	Same as above	Detailed safety analysis given of tender ORION (AS-18) at its location in the Charleston, S.C. area. Presentation given by NAVSEASYSCOM attendee at meeting in order to review with Board the safety data regarding certain torpedoes, and evolutions performed on them aboard the ORION while in port to establish the fact that these weapons are safe during the shipboard evolutions.
36 15,588 18-24 Feb 75	Same as above	Disagreement between Chmn, ESB and Navy member of Board. Altercation somewhat smoothed over by Board staff member who makes excellent discourse on philosophy of safety standards. Historically, the Board has been required to establish...standards and apply them based on...risk to property and personnel <u>if</u> the explosion occurs not based upon the probability of the explosion occuring in the first place.

Table B-1 (continued)

Reference Vol/Pp/Date	Document Identification	Fact/Datum (usually abstracted and/or paraphrased)
36 15,594-603 18-24 Feb 75	Meeting #269 DDESB	Statement by Navy member of DDESB regarding expenditures at Charleston, S.C. in order to make various esq-d modifications for the USS ORION for several different alternative situations.
36 15,640 18-24 Feb 75	Same as above	Strong words between Navy Board member and Chmn and one staff member. Subject is references for standards relating to ESQD rules. They are based upon the predicted effects of an explosion that occurs at a certain point involving 30,000 lbs. or whatever (quote) of explosives.... agreed to by the Board over a period of years on the basis of...voluminous...tests and accident data which were described...and presented in detail each time a change to the standard is recommended...
36 15,708-9 18-24 Feb 75	Same as above	Vote taken here regarding Charleston, S.C. MILCON projects. Siting was approved at less than desirable safety with understandings...that destroyer and submarine tenders will be berthed...toward channel end of pier...and with restrictions being placed upon the new explosive weight (NEW) for both the submarine tenders (NTE 80,000 lbs) and the destroyer tenders (NTE 30,000 lbs). Further, that handling operations in submarine tenders shall be restricted to two warshot torpedoes per workshop area.
37 15,885-949 22 Apr 75	DDESB Meeting #270, Verbatim Transcript	Meeting was called to consider actions recommended by the Navy: to approve siting for a project at Charleston Naval Station; a second project there; and to support continuing Naval action for explosives safety in Charleston, S.C....and maintain Fleet unit readiness.
37 15,904-7 22 Apr 75	Same as above	During initial presentation by Navy, certain items discussed relating to ESQD rules. Board member expounded for Navy's benefit applicability for use of "K" values of 11 vs. 18 vs. 40.

Table B-1 (continued)

Reference Vol/Pp/Date	Document Identification	Fact/Datum (usually abstracted and/or paraphrased)
37 15-909-11 22 Apr 75	DDESB Meeting #270, Verbatim Transcript	Discussion continued after lapse of few pages. Board member indicated historical basis for initial acceptance of "K" value of 11 (in $11W^{1/3}$) and also 18. In his recollection this passage was in the standards since they were originally written after the studies on the Port Chicago and MOUNT HOOD explosions. He also mentioned the ALHENA, an AKA with a hull presumably like that of a tender, and the deaths and injuries resulting from its explosion.
37 15,915-19 22 Apr 75	Same as above	Discussion continues on applicability of factors of "K" of 11, 18, and 40 and the rationale for their use.
37 15,949 22 Apr 75	Same as above	Board agreed unanimously and prepared a memo for CNO, this date, in which one project was approved and the other approved with understandings.
37 15,950-1 22 Apr 75	Memo for CNO from members, DDESB	Summarizes results of Board's deliberations at Mtg #270 (see item directly above).
37 15,952-76 9 Apr 75	Ltr from CNO to Chmn, DDESB	Presents proposals from CNO to Board regarding meeting on Charleston, S.C. Lists the projects that CNO would like full board to consider. See Mts. #270, above.
37 15,977 24 Apr 75	Memo for Dept Asst SECDEF (I+H) from Chmn, DDESB	Chmn, DDESB, explains reasons why given siting at Charleston Naval Station, S.C. was approved at less than safety distance, with the understanding that the Navy would continue its explosives safety improvement program.

Table B-1 (continued)

Reference Vol/Pp/Date	Document Identification	Fact/Datum (usually abstracted and/or paraphrased)
37 15,978-9 23 Apr 75	Memo for OASD (I+H) from Asst Gen Counsel (Logistics)	Subject memo related to revision of DOD 5154.4S. Office of General Counsel suggests that the draft of this standard be published in the Federal Register for public comment prior to adoption (underlined in orig.) due to its potential...impact on public.
37 15,992-3 5 May 75	Memo to Board members from Chmn, DDESB	Discusses proposed change 1 to DOD 5154.4S. This change related to hardening of a target building...to suppress explosion effects. Rationale or test results must justify any such reduction.
37 16,001 9 May 75	Memo for SECNAV from Chmn, DDESB	Memo discusses explosives safety survey of U.S. Naval Station, NORVA. Hazardous condition exists...due to presence of loaded ammunition ships and tenders...
37 16,010 16 May 75	Memo from Chmn, DDESB to Board members	Memo related to DOD Standard 5154.4S and to a proposal that accident reporting and investigating requirements be included in a future change to that standard.
37 16,011 21 May 75	Memo for CNO (OP-04) from Chmn, DDESB	Memo says that ESQD criteria application to naval tenders is reaffirmed (as has been done on several occasions in the past) and will remain in effect until such time as there is documented technical material to support a change to the Explosives Safety Standards.
37 16,013-66 21 May 75	Verbatim transcript of 271st meeting of ESB	Meeting was related to Navy proposals for site plan at Naval Submarine Support Facility, San Diego and proposal for berthing of submarine tenders SPERRY and DIXON at this submarine support facility. Discussion of problem of providing essential fleet services within safety criteria with maintaining efficiency (see p. 16,015).

Table B-1 (continued)

Reference Vol/Pp/Date	Document Identification	Fact/Datum (usually abstracted and/or paraphrased)
37 16,040 21 May 75	Verbatim transcript of 271st meeting of ESB	Discussing difference between having 60,000 lbs explosives in one ship location vs. having explosives divided in different ship section. It will be generally assumed that all explosives are in one spot for figuring out what is called "maximum credible event."
37 16,052 21 May 75	Same as above	Navy is asked about and discusses plans for testing to demonstrate what can effectively limit any explosion that might occur on a vessel: barricading from ship, war-wagon concept on land, inherent structure of ship.
37 16,054-5 21 May 75	Same as above	Discussion again of 60,000 lbs. explosives in a submarine tender and "maximum credible event." Board member states that while he thinks there is little likelihood of getting maximum credible event with 60,000 lbs. in a single mass as with a distributed load of warheads in two magazines (with separations varying depending on the storage arrangement)...no way is known to evaluate it with the existing state of the art. He suggests that simulation tests might be helpful, but implies that no rules will change without such tests.
37 16,063 21 May 75	Same as above	Discussion about extra torpedo warheads that used to be stored in workshop and hazard of this situation. Board member states that thrust of their goal is to get the maintenance function removed from tenders, especally in crowded ports.
37 16,067-8 21 May 75	Memo for CNO from DDESB	The Board approved the Navy request presented at meeting #271 based on Navy's significant actions, and with certain understandings. These include restricting MK 37 workshop operations to 3 warshots in the space at any one time, limiting New Explosive Weight (NEW) in submarine tenders at the NAVSUBSUPFAC facility to 60,000 lbs. each, and continued efforts to lower the NEW in each submarine tender.

Table B-1 (continued)

Reference Vol/Pp/Date	Document Identification	Fact/Datum (usually abstracted and/or paraphrased)
37 16,069-97 19 May 75	Memo for Chmn, DDESB from CNO (OP 411F)	Initial request for site review for Naval submarine support facility, San Diego, with action items for DDESB decision and copy of Navy presentation. Navy's case for subject request presented. See Meeting #271 of DDESB (previous page) for resolution of this request.
37 16,115 6 Jun 75	Memo for Chmn, DDESB from DOD,. Office of Gen Counsel (log)	Discusses request by Chmn, DDESB, to General Counsel's Office to determine whether Board documents relating to DOD Standard 5154.4S should be published in the Federal Register under "public impact...potential." Answer negative for the particular sections of the Standard cited.
37 16,125-6 12 Jun 75	Ltr from Chmn, DDESB (OP-04)	Discusses an explosives safety survey made of US Naval Station, Charleston, S.C. Mentions how quantity-distance arcs encumber a major portion of the Naval Station. This letter is quite similar to a host of letters citing the Navy in particular for violations of safety conditions (especially quantity-distance irregularities) in its various facilities.
37 16,127-8 12 Jun 75	Ltr from Chmn, DDESB to SECNAV	States again information stated above.
37 16,171 5 Mar 75	Memo for CNO from Chmn, DDESB	States responsibility of DDESB regarding programs for research, development, test and evaluation concerning ammunition and explosives hazards required to develop and maintain safety standards. They have heard of Navy's test program to evaluate explosives safety standards, particularly quantity-distance, as applied to Navy ships. DDESB offers their assistance or advice in planning for Navy's program and would like to observe some of the tests and also get copies of the results.
37 16,172 25 Apr 75	Memo for CNO (OP-411) from Chmn, DDESB	Discusses DDESB partial funding (referenced in memo, directly above) for Navy-sponsored test program to evaluate explosives safety standards as applied to Navy ships. Suggests that such a program could be managed by DDESB with partial funding being given by Navy.

Table B-1 (continued)

Reference Vol/Pp/Date	Document Identification	Fact/Datum (usually abstracted and/or paraphrased)
38 16,200-49 8 Oct 75	Verbatim Transcript, DDESB Mtg #272	This meeting was called to deal with a Navy proposal (again) reviewing military construction at the New London Naval Base Complex and also Navy's explosive safety program philosophy and plan for action and milestones. Generally the construction was approved (with restrictions) and the philosophy and action and milestones agreed with (again with certain reservations).
38 16,202 8 Oct 75	Same as above	Naval Facilities Engineering Command speaker gives statement of Navy position and compromise suggested in order to provide essential fleet services with safety criteria, maintaining efficiency, and weighing these goals against personnel safety and public opinion.
38 16,217-8 & 16,246-7 8 Oct 75	Same as above	One of members of Board makes strong point hoping that no one gets the erroneous impression that military are exempt from QD in the standards. No differentiation should be made between military or civilian. Same point made again later in the afternoon by other Board member (see two later pages referenced).
38 16,223 8 Oct 75	Same as above	Navy Board member seems to be stating that while they are interested in reduction of the safety hazard...but this does not include military personnel. Statement seems in flat contradiction to item referenced above.
38 16,240-1 8 Oct 75	Same as above	Navy member indicates Navy plans for handling explosives (proving point with testing program first) by introducing suppressive shielding design into a truck. Idea was to present Navy's plan to Board now, get assistance of Board now (during experimental stage), and have plan already agreed to when results are in. Board concurrence.

Table B-1 (continued)

Reference Vol/Pp/Date	Document Identification	Fact/Datum (usually abstracted and/or paraphrased)
38 16,245 8 Oct 75	Verbatim Transcript, DDESB Meeting #272	Board chairman states that governing directives don't mention any defense conditions and generally explosives safety standards apply regardless of such conditions. However the Service Secretaries are allowed for strategic or impelling reasons or operational necessity to take whatever risk they desire and deem necessary.
38 16,245-6 8 Oct 75	Same as above	Question brought up regarding para 7-2 of 5154.48 relating to ammunition or explosives stored in ships' magazines and intended for the service of shipboard armament or aircraft. Board member indicates that he thinks that a number of classes of ships...mentioned at meeting and in new OPNAV instruction are not so covered. He indicated that Secretariat would need advice from Board in applying this exemption to those classes of ships by class.
38 16,250-1 8 Oct 75	Memo for CNO from Chmn, DDESB	Makes reference to Board meeting #272 and commends Navy's continuing explosives safety program. Approval given to subject military construction project and continuing actions by Navy to increase explosives safety in the New London, CT. Submarine Base complex, subject to understandings as follows:...most of which have effect of limiting amount of explosives handled at any given time.
38 16,306-7 30 Jul 75	Memo for SECNAV from Chmn, DDESB	Memo discusses explosives safety survey at U.S. Naval Submarine Base, New London, CT. Mentions that potentially hazardous conditions exist and have existed at the subject base (see previous correspondence). Concludes that conditions are of such severity that notice had to be given to Secretary.
38 16,308-11 10 Sep 75	Ltr from CNO (OP 411) to Chmn, DDESB	Discusses Board Meeting to consider MILCON/Explosives Safety at New London, Complex, CT. States further (in first endorsement) that all actions schedules or taken to date are conistent with Navy's planned improvements in explosives safety world-wide...

Table B-1 (continued)

Reference Vol/Pp/Date	Document Identification	Fact/Datum (usually abstracted and/or paraphrased)
38 16,311-36 9 Jun 75	Ltr from CNO to Dist (OP 411)	Discusses in great planning detail Navy explosive safety program including safety philosophy and overview and plan of action and milestones.
38 16,495-6 24 Nov 75	Memo for CNO from Chmn, DDESB	Discusses U.S. Navy explosives safety policies, requirements and procedures. Recommends changes to OPNAVINST 8023.2A (17 Jul 75) regarding changes to definition of "operational necessity," " cargo ammunition," "explosive limit," and also states that the definition of "exemption" should conform to that in DOD standard 5154.4S (Jul 74).
38 16,501-2 18 Dec 75	Ltr from Chmn, to CNO	Discusses explosives safety at TRIDENT Support Site, Bangor, Wash. Indicates that while DDESB ltr of 30 Aug 73 approved certain concepts and explosives safety criteria for the subject support site, more buildings and elaborate structures (and plans for more people) have been added since the original correspondence. Suggests either relocation of potential targets to greater distances or designing blast and fragment resistance into structures.
39 16,508-793 4,6,7,17,18 Nov 75	Verbatim transcript DDESB meeting #274	Meeting was in response to CNO's request to relocate dry-dock ARDM-2 alongside pier at Naval Weapons Station, Charleston, S.C. Much excellent information of a general and broad-based philosophic nature (regarding explosives safety) was expounded during item 1 of the agenda of this meeting (given below, in detail).

Table B-1 (continued)

Reference Vol/Pp/Date	Document Identification	Fact/Datum (usually abstracted and/or paraphrased)
39 16,509-11 4 Nov 75	Verbatim Transcript DDESB meeting #274	Request for moving of drydock was looked at by the DDESB Secretariat member in light of past actions of Board. These are cited and relate to large weapons system then considered of extreme strategic importance in terms of defense of the United States (e.g., Nike Hercules, Air Force Minuteman fixed ICBM). In early conflicts on these issues SECDEF generally backed the DDESB, stating once again the point that "...in determining safety distance criteria the (then) AFESB cannot be guided by the probability of an explosion. Overall policy must determine a safe distance should such an event occur."
39 16,512-3 4 Nov 75	Same as above	Reiteration at this meeting of instructions under which Board has and is operating. Board member cites again from House Document 199 on page 7: "...storage of all types of material should be so arranged as to reduce or limit Government property loss from fire or explosion." Discusses limits for both the situations where new facilities are involved and also for existing facilities and stores.
39 16,513 4 Nov 75	Same as above	In response to Navy Board member's request Secretariat member of DDESB cites again definition of reasonable safety used by Board: All these safety standards are used as minima. As regards the safety of individuals and structures outside the boundaries of ammunitions depots the word safety is a relative term. No one is ever absolutely safe from injury. The average chance of the average individual of escaping injury has by custom been termed and accepted as "safe."
39 16,514 4 Nov 75	Same as above	Item #1 of meeting #274 divided into 4 parts: (1) statement of operational necessity for relocation; (2) evaluation of significance of that relative to real estate siting; (3) reasonable safety aspects related to Chapter 7 of DOD standard 5154.4S, explosives safety standards for pier nd wharf facilities; and (4) overview of problem followed by an on-site survey.

Table B-1 (continued)

Reference Vol/Pp/Date	Document Identification	Fact/Datum (usually abstracted and/or paraphrased)
39 16,536-7 4 Nov 75	Verbatim transcript DDESB meeting #274	Confusion/altercation/disagreement between Navy Board member and Secretariat member over combatant ship exemption when it is just sitting in the water and not handling its ammunition. Board member contends that material which is on board submarines when no activity is taking place should not be excluded. Navy member disagrees.
39 16,538-9 4 Nov 75	Same as above	Chmn, DDESB, states that he has previously brought up lots of points related to this issue to CNO. He said he wanted a review of entire issue with regard to DDESB philosophy of explosives safety. Said Navy refused and only wanted to address current issue. Seems irritated because he believes that Navy-presented material goes to the more general issues.
39 16,545-6 4 Nov 75	Same as above	Board member concluded that they did consider the possibility of a maximum credible incident in a single missile and further that the submarine structure was not demonstrated to be proof against that incident being communicated to those additional missiles in the tubes. Big point here for all discussion with Board is that where there is no proof for doing something (unsafe), and no massive military reason for so doing, the Board will stand firm on its previous safety policies.
39 16,551-3 4 Nov 75	Same as above	Navy member in disagreement with Board Chmn. Navy member stated that no ESQD safety rules apply when no maintenance is going on in the conventional torpedo room spaces. However, Board Chmn states that in 7 Nov 73 letter from Asst SECDEF (I+L), statement was made that Board recommends (and Asst. SECDEF concurred) in those cases where explosives safety quantity-distance criteria cannot be met, SECNAV reduce number of munitions functions by tenders in port by limiting the tender operations to....minimal activities. Disagreement on letter interpretation results (it seems) in victory for Board members.

Table B-1 (continued)

Reference Vol/Pp/Date	Document Identification	Fact/Datum (usually abstracted and/or paraphrased)
39 16,554- 16,793 4-18 Nov 75	Verbatim transcript DDESB meeting #274	Continuation of discussion during Verbatim transcript of item 1 as well as discussion of items 3-6. These additional items related to definition of a "ship unit," definition of a support facility for "ship unit," decision as to whether an SSBN is exempt from the "ship unit" definition, use of K=11 for existing facilities (wharves), and K=18 for new piers and wharves. Of far greater significance than the specific outcome of any one of these issues during the five full days of discussion and presentation was the general tone of the meetings. There seemed to be much strong disagreement over previous Board decisions, basic definitions such as "acceptable safety," and frequently a feeling of ill-will between members. This seemed to be most noticeable between the Navy member, who was the petitioner and at whose behest the meeting was held and the other Board members. Details of the summary of the above-mentioned meeting are presented below as well as items of interest which were presented in various appendices relating to Meeting #274.
39 16,864-5 18 Nov 75	Memo for CNO from Chmn, DDESB	This memo presents a summary from the Chmn, DDESB, and the two concurring Board members (Army, Air Force) regarding the results of the Board Meeting #274. Non-concurrence of the Navy Board member on one item was noted. The specific MILCON project (item #1) for which the subject meeting was called (primarily) was not approved (3 reasons cited). Further study suggested for other items.

Table B-1 (continued)

Reference Vol/Pp/Date	Document Identification	Fact/Datum (usually abstracted and/or paraphrased)
39 16,808-9 7 Nov 73	Memo for ASD(I+L) from Chmn, DDESB	This was presented as App. E to the subject meeting. It is a reply by the DDESB to ASD (I+L) memo of 18 Sep 73 for exemption from application of explosives safety quantity-distance standards. It states that the Board met during 5-7 Nov 73, received briefings, and conducted on-site surveys. The Board's recommendations were that in those cases where ESQD criteria could not be met that SECNAV reduce the number of munitions functions by tenders in port by limiting tender operations to: (a) receipt and issue of warshot torpedoes and missiles; (b) maintenance, assembly, and overhaul of exercise torpedoes and missiles; and (c) operations required to maintain readiness of nuclear weapons as assigned.... In the interim the Board recommended that tenders should be berthed at locations which provide the greatest practical degree of protection from explosives protection from the surroundings. Finally, the Board recommended that the DOD Ammunition and Explosives Safety Standards (DOD 4145.27M) not be changed at this time as requested by SECNAV memorandum for SECDEF dtd 12 Sep 1973.
39 16,827 1 Dec 73	Memo for SECNAV From Dep Asst SECDEF (I+L)	This memo refers to the SECNAV memo of 12 Sep 73 and subsequent correspondence on the application of explosives safety quantity-distance to destroyer and submarine tenders. The memo states that DDESB has advised DASD(I+L) that ESQD should continue to be met as applied to tenders, and where these distances cannot be met, the operations of tenders whould be appropriately limited. Further, while existing circumstances will probably not allow immediate full compliance with all safety standards, it is believed that interim steps recommended by DDESB plus a positive program to assure compliance in a reasonable time will permit essential operations to continue with an acceptable degree of safety.

Table B-1 (continued)

Reference Vol/Pp/Date	Document Identification	Fact/Datum (usually abstracted and/or paraphrased)
39 16,832-41 10 Nov 75	Memo from Chmn, DDESB to CNO	This interesting memorandum relates to correspondence from the middle of DDESB Meeting #274 wherein the Chairman, DDESB, and Army and Air Force members put forth questions regarding P-031 siting. The significance of this document, it appears, relates to the type of questions the other Board members are addressing to the Navy member who is petitioning the Board for relief from the esq-d regulations.
40 16,886-901 6 Jan 76	Memo from Chmn, DDESB to ASD(I+H)	Presents summary of significant activities of the DDESB in 1975. Six board meetings noted. Meeting #269 approved with understandings two MILCON projects. Submarine tender net explosives weight (NEW) was reduced to 80,000 lbs. (p. 16,888). Destroyer-tender NEW reduced to 30,000 lbs. (p. 16,888). Torpedo handling operations restricted to two warshots per workshop space (p. 16,888). Board advised that the hazarding of a significant number of personnel and structures to potential explosives incident from the NEW on board the Naval Station tenders should be reduced by removal or reduction of the explosives source or by relocation of the target personnel and structures (p. 16,888). Meeting #270 sited two MILCON projects inside explosives safety quantity-distance arcs. Meeting #271 sited a MILCON project at San Diego Naval Base inside of esq-d arcs. Also, among other things, the NEW in submarine tenders at the NAVSUBSUPFAC facility was limited to 60,000 lbs each, unless departing to sea within 24 hrs. Lots of items at these meetings were to make some specific situation safer, to cancel some ammunition handling, limit NEW in submarine tenders to a given maximum, ditto for destroyer tenders. Usually these items did not relate to formal, major changes in standards.
40 16,892-3 6 Jan 76	Same as above	Under Advices to the Military Departments the Navy had 8 listed which invariably related to explosives safety surveys which had relieved potentially hazardous conditions.

Table B-1 (continued)

Reference Vol/Pp/Date	Document Identification	Fact/Datum (usually abstracted and/or paraphrased)
40 16,894 6 Jan 76	Memo from Chmn, DDESB to ASD(I+H)	With respect to the confidentiality of Board minutes, in a recent court decision, the presiding judge did not allow an official copy of the minutes of a Board meeting to be introduced into the court's case. By implication, Board minutes' confidentiality was confirmed.
40 16,897-8 6 Jan 76	Same as above	Under establishment of standards, Board issued (effective July 75) DOD Explosives Safety Standards 5154.4S, replacing 4145.27M. Interim Change 1 included additional standards and implements the UN recommendations for classification of ammunition and explosives. Additionally, Board is working with Navy Department to develop appropriate Q-D standards governing operations when explosives must be left on board SSBN's and certain classes of amphibious warfare ships during maintenance and refit operations. Board has also established temporary working groups including (relevant to subject project): hazard classification compatibility working group, explosives accident reporting working group.
40 16,899-900 6 Jan 76	Same as above	Under item 3: In Apr 75 the Board authorized resumption of efforts to improve the characterization of hazards from fragment producing ammunition. Tests of artillery projectiles....are being conducted to determine fragment velocity and the distribution of the number of fragments with respect to fragment weight, as functions of direction from the cluster and of the number and arrangement of projectiles in the cluster. The work will lead ultimately to a sound technical basis for standards for protection against fragment hazards. Under item #6: The Secretariat prepared and published Technical Papers 11 and 12 relating, respectively to effects of explosions of stacks of ammunition and, for the latter, a review of information related to fragment and debris hazards.

Table B-1 (continued)

Reference Vol/Pp/Date	Document Identification	Fact/Datum (usually abstracted and/or paraphrased)
40 16,912-3 29 Jan 76	Memo for ASN(I+L) from Chmn, DDESB	This memo lists explosives safety considerations at explosives handling piers in certain parts of the San Francisco Bay area. Memo lists restrictions on piers, other ship berthing constraints made necessary by too many ships for the limited available berthing which has, in the past, caused significant explosives safety problems.
40 16,949- 17,024 (with enclosures on 17,025-17,076) 18-19 Feb 76	Verbatim Transcript DDESB Meeting #275	The primary topic at this meeting was explosives safety quantity-distance standards applicable to Navy ships. It would appear that very significant differences exist between Navy interpretations regarding application of ammunition and explosives safety standards to Navy pier and wharf scenarios and the views of the Chairman, DDESB (see also ltr of 2 March 76, below). The Board's views, summarized in a technical assessment shown as Attachment A (pp. 17, 025 to 17,044), the Chairman, DDESB, felt were also shared by the Army and Air Force Members. Details of the meeting and altercations follow below.
40 16,966-7 18 Feb 76	Same as above	Board member reiterates again to Navy member that the guidelines used in interpreting the phrase "reasonable safety" by the Board are not necessarily the same ones that the Navy is using. Seems as if there is no definite conclusion to the discussion and the topic of the Meeting shifted to the NAVSTA Norfolk safety improvement plan.
40 16,982-3 18 Feb 76	Same as above	Navy Board member cites 7 Nov 73 guidance, makes some direct quotes, and then concludes that in this guidance relating to tenders there is no need for a "standing arc." Both Board Secretariat member and Board Chairman disagree strongly with this interpretation and Navy member accedes to their statements (but says he'll want to talk about it again later).

Table B-1 (continued)

Reference Vol/Pp/Date	Document Identification	Fact/Datum (usually abstracted and/or paraphrased)
40 17,016-7 19 Feb 76	Verbatim Transcript DDESB Meeting #275	Alternate Navy Board member indicates as start of second day's meeting continuation that portion of briefing of previous day by Secretariat Member indicated a "monumental misunderstanding between ourselves (i.e., Secretariat) and the Navy over basic application of the Standards (DOD 5154.4S) as regards (1) the calculation of net explosive weight, (2) determination of ship units, and (3) the meaning of maximum credible event and other terms fundamental to the explosives safety or quantity-distance evaluation of any given harbor scenario." The Navy alternate Member said that these "new interpretations" first came to the Navy's attention on 18 Feb 76 and (he believes) are in conflict with previous routine applications of explosives safety standards to Navy pier and wharf scenarios. He also said they were in conflict with previous unanimous decision, interpretations, and rulings of formal DOD Board meetings including #229 (combatants), #260 (fragment damage protection zones), #264 (tender missions), #267 (mission requirements), and #269-272, inc., regarding application of pertinent Board standards to similar Navy scenarios. Based on (in his opinion) this new situation he says that Navy has now no recourse but to withdraw its request to the Board for approval of the NAVSTA Norfolk, Va. military construction projects and projects for the AE/AOE homeport plan in order to evaluate the impact on the above missions of these new Secretariat interpretations of existing Board standards as they apply to Navy harbor scenarios. As requested, meeting closes shortly thereafter.

Table B-1 (continued)

Reference Vol/Pp/Date	Document Identification	Fact/Datum (usually abstracted and/or paraphrased)
40 17,025-44 18-19 Feb 76	Verbatim Transcript DDESB Meeting #275	These pages compris. Tab A of this Meeting and present a briefing from the Board Secretariat to explain the application of the explosives safety criteria in DOD Standard 5154.4S to waterfront and harbor facilities at which ammunition and explosives are, or may be, handled, stored, loaded onto ships, off-loaded from them, or shifted within the ships. Memo describes basic application of the standards as regards the calculation of net explosive weight, determination of ship units, and the meaning of a maximum credible event, and other terms that are fundamental to the explosive safety or quantity-distance evaluation of any given harbor scenario. Memo further states that Board believes that present standards have been correctly and consistently applied by the Secretariat, that they need some revision to provide clarity and more detailed guidelines, and there are significant points in the standards that may well warrant a relaxation after due consideration by the Board of the current state of the art. Seems like an excellent summary and presentation of Board's then-current overall policies with respect to Navy ships at harbor.
40 17,075-6 no date given	Same as above	This document is Tab H of the subject meeting and is a reply to the statements made in Tab A (directly above). This document refers to "...new interpretations of the explosives safety Board standards, DOD 5154.4S.." which they say"..first came to the attention of the Navy on 18 Feb 76... and are in conflict with previous routine application of explosive safety standards to navy pier and wharf scenarios. States further that these new interpretations are also in conflect with previous unanimous (underlined in original) decisions, interpretations, and rulings of formal DOD explosive safety Board meeting (which are cited)." Concluded that Navy is currently in compliance with the Standards to maximum extent possible; where it is not possible, it has evaluated and accepted minimum risk... in order to perform its mission. Finally, over a five year period it has instituted a vigorous explosive safety improvement program in order to further increase explosive safety Navy-wide.

Table B-1 (continued)

Reference Vol/Pp/Date	Document Identification	Fact/Datum (usually abstracted and/or paraphrased)
40 17,176-203 2 Mar 76	Memo for ASN(I+L) from Chmn, DDESB	This letter plus three attachments discusses Chairman's view of explosives safety quantity-distance standards applicable to Navy ships. First attachment to this letter is what was previously referred to as Tab A of DDESB Meeting #275. This Tab presented technical assessment of esq-d application to Navy ships and it is stated in this letter that both Board and Army and Air Force Members generally concurred with this assessment.. Letter states that Alternate Navy member indicated that this technical assessment was a new interpretation of DOD Ammunition and Explosives Safety Standards, DOD 5154.4S. Plus other statements which Chairman states are at variance with or directly contradictory to discussion statements given and recorded at the time of the technical assessment presentation. Chairman states that he does not agree with the remarks of Navy Alternate Member...and since the Standards are the basis for granting of approval for military construction in areas affected by explosives safety criteria, Board is constrained in its consideration of other Navy proposals involving the explosives safety standards until they are understood by the parties making up such proposals. Suggests ways to start toward resolution of the problem.
40 17,297-8 14 Jun 76	Memo for ASD(I+L) from Chmn, DDESB	Board Chairman referred to Navy presentation on Board's history made to Dr. Bennett (position unspecified) on 11 Jun 76. Chairman states that presentation was in error on several items. Crux of matter is that Navy wants standards changed for its own purposes. Chairman objects and offers to give his own briefing to Dr. Bennett (as was proposed earlier). Concluded that Navy proposals for change to present standards wording, additional interim standards approval, and MILCON in explosives zones should continue to be sent to the Board for examination and advice to DOD officials. If the advice is unacceptable to Navy, then route of appeal to DOD is in accordance with DOD directive 5154.5.

Table B-1 (continued)

Reference Vol/Pp/Date	Document Identification	Fact/Datum (usually abstracted and/or paraphrased)
40 17,316-28 7 Jul 76	Memo for Chmn, DDESB from ASD (I+L)	These documents related to MILCON site approvals at Norfolk Naval Station. Documentation listed and site approval requested with additional statement that this would probably result in a net improvement to the explosive safety problem.
41 17,522-3* 30 Sep 76 (REPRO #11)	Draft Memo for Sec Army, Navy AF from ASD(I+L)	Memo relates to authority to waive explosives safety standards and refers to a recent question regarding authority to issue waivers or exemptions to DOD Explosives Safety Standards. Memo indicates that a waiver is intended to cover temporary, or emergency,...conditions. That exemptions are issued to cover general or long term situations... in event of an accident. Conclusion reached is that there is no criterion by which all cases can be evaluated to determine whether a waiver or an exemption would be correct and individual situations must be examined on a case-by-case basis.
41 17,525* 13 Oct 76 (REPRO #12)	Memo for Members, DDESB from Chmn, DDESB	Memo relates to standardized hazard classification information and requests that appropriate office of each Service work to develop standardized format for computerization of hazard classification information.
41 17,526* 29 Sep 76 (REPRO #13)	Ltr from OP411/ CNO to Chmn, DDESB	Letter relates to explosives safety handling arc for torpedo evolutions and recommends that such arc for up to 1500 lbs of explosives in Navy torpedoes be established at 500 ft radius for handling evolutions with necessary shielding in transport vehicles. Test data provided in enclosure (not attached) reinforces recommendation (says this letter).

*Material reproduced in Appendix D.

Table B-1 (continued)

Reference Vol/Pp/Date	Document Identification	Fact/Datum (usually abstracted and/o. ·aaphrased)
41 17,527* 28 Oct 76 (REPRO #14)	Ltr from Chmn, DDESB to CNO, OP-04	Letter is reply to above communication and also makes reference to conference help 27 Oct 76 in DDESB offices on same topic. Mentions that data presented in letter above was reviewed and discussed, comprehensive nature of test program conducted and analysis of data acknowledged. The recommended 500-ft explosives safety distance is concurred in for up to 500 lbs of explosives in Navy torpedoes, provided the torpedoes are in transport vehicles equipped with necessary shielding equivalent to that utilized in the test program, and when the 1500 pounds (NEW) is the maximum credible amount which can be involved in a single incident. Concluded that the torpedo evaluation is considered adequate for compliance with DOD Standard 5154.4S for up to 1500 lbs NEW under the conditions stated and an interim change to the standard will be issued to reflect this.
41 17,548-9 12 Nov 76	Memo for Secs of Army, Navy, Air Force from Act Prin Dep Asst SECDEF (I+L)	Memo deals with authority to waive explosives safety standards and is the formal document (not draft) shown as the first item at top of this page.
41 17,550 9 Nov 76	Memo from ASD (I+L) for Mr. Shrontz	Memo relates to waiver of explosives safety standards and indicates that there has been a recent tendency among the Services to delegate to field offices the authority to exempt installations from Explosive Safety Standards. Memo states that this should not be done because of the long term nature and possible severe public safety implications of an exemption. Local installation commanders have the authority to waive these standards for temporary conditions, emergency situations, etc.

*Material reproduced in Appendix D.

Table B-1 (continued)

Reference Vol/Pp/Date	Document Identification	Fact/Datum (usually abstracted and/or paraphrased)
41 17,570-2 8 Dec 76	Memo for Chmn, ASESB and NOP-411 fm OASD	Memo relates to safety distances around combatant ships and makes reference to possible alternate interpretations of verbatim transcript of 229th meeting of ASESB. Suggests that a Board meeting be convened to gather and analyze the evidence and reconsider the evidence of such clearance. Suggests that data available since 1964 may make such analysis quite feasible at present.
41 17,582-90 27 Jan 77	Memo for DASD (I&H) from Chmn, DDESB	Memo forwards list of significant activities of the DDESB for Calendar Year 1976. Notes in main body that Navy issued interim explosives safety standards covering operations at piers and wharves (published without Board advice) and notes that a Board meeting is required to consider the interim standards as soon as Navy desires or completes the test and analysis program associated with those standards. Highlights follow. Hazard classification compatibility working group discussed and reviewed several formats for...development of a standardized format for the three military departments. They also completed draft revision of tri-service regulation on Explosives Hazard Classification Procedures. (p. 17,588) Under Research Projects item 6(c),(4) mentions that NSWC, Dahlgren Laboratory has completed testing....in order to try and characterize the fragment velocity and weight distribution of...different configurations of clusters of 155mm TNT loaded projectiles. Results obtained noted (p. 17,589).
41 17,594 23 Feb 77	Memo for Board Members from Chmn, DDESB	Memo lists recommended change to DOD Standard 5154.4S. Change states that DOD component procuring contracting officer will include the requirements of chapter 9-1D in all ammunition, explosives, or chemical agent contracts and will require that a Board of Investigation be convened by the PCO; or contractor explosives accidents when determined necessary.

Table B-1 (continued)

Reference Vol/Pp/Date	Document Identification	Fact/Datum (usually abstracted and/or paraphrased)
41 17,595-6 27 Jan 77	Memo for OASD (I+L) from OP 411F, CNO	Memo relates to safety distances around combatant ships. Main point is that if additional information on subject topic is desired, it is requested that OP 411F be contacted early on to initiate action to develop the information needed. Relates to Navy's R&D test program (currently underway) to determine certain effects of explosions onboard ship.
41 17,597 11 Mar 77	Memo for OASD (I+L) from Chmn, DDESB	Memo relates to safety distances around combatant ships and states that Board has not yet had a chance to review the details of test plans for subject topic in memo mentioned above.
41 17,605-6 10 Mar 77	Memo for Asst General Counsel (Logistics) from Chmn, DDESB	Memo relates to DOD quantity-distance tables and relation between these and safety manual of Corps of Engineers, Dept of Army. Letter requests opinion of Chmn, DDESB, as to whether U.S. Government owned land under jurisdiction of Civil Works Directorate, Corps of Engineers should be construed as a DOD establishment for application of quantity-distance standards (as in DOD Standard 51[illegible].4S).
41 17,607 11 Mar 77	Memo for Board Members from Chmn, DDESB	Memo relates to maximum credible event and change to Standard 5154.4S. Letter proposes that a definition of "maximum credible event (MCE)" be included in DOD Standard 5154.4S and submits such definition for members comments/concurrence: "In hazards evaluation, the maximum credible event from a hypothesized accidental explosion, fire, or agent release is the worst single event that is likely to occur from a given quantity and disposition of ammunition and explosives. Event must be realistic with a reasonable probability of occurrence considering the explosion propagation, burning rate characteristics, and physical protection given to the items involved. The MCE evaluated on this basis may then be used as a basis for effects calculations and casualty predictions."

Table B-2. Data Related to Explosives Safety Quantity-Distance Rules Extracted From Classified DDESB Official Historical Volumes

Reference Vol/Pp/Date	Document Identification	Fact/Datum (usually abstracted and/or paraphrased)
CONF/12,819/ 14 Dec 71	Memo for DASD (I&H) from Chmn, DDESB	Memo deals with draft proposed memo from ASD (I&L) to ASN(I&L) dealing with home-port berthing of ammunition ships. Makes minor changes to suggested memo of ASD (I&L) on subject topic.
CONF/12,821-2/23 Dec 71	Memo from ASD (I&L) to ASN(I&L)	Letter relates to discussion and correspondence regarding the problem of berthing ammunition ships. Lists three actions to be taken in regard to problem: program should include preparation of an estimate of cost for land and easements for meeting criteria of DOD Inst 4145.27-M and providing a much higher degree of protection to the public.
CONF/13,086-9/15 Sep 72	Memo from Chmn, DDESB to DASD (I&L)	Memo deals with study of ammunition ship homeporting. This memo deals with a review and comments on Navy's study of ammunition ship homeporting. Long range recommendations are to expand study on ammunition ship berthing...and to select one location on each cost for multiple ammunition ship berth (6-12) facilities.
CONF/13,104-9/26 & 27 Oct 72	Memo for DASD(I &H) from Chmn, DDESB	Memo deals with proposed draft letter to Asst SECNAV on AE homeporting. Attached to memo is original draft presented on pp 13,106-9.
CONF/14,498-14,599/5 Nov 73	Verbatim Transcript, DDESB Meeting #264	Purpose of meeting is to allow Navy to present briefing to Board on particular types of Navy ships, submarine tenders, and destroyer tenders concerning which an issue has been raised in the application of quantity-distance standards. Supplemental materials related to this meeting appear on pp. 14,642-67.
CONF/14,967-85/13 Jun 73 to 27 Nov 73	Memo between ASN(I&L),ASD (I&L)	Memoranda relate to homeporting of commissioned naval ammunition cargo ships; mentions current status of problem.

Table B-2. (Continued)

Reference Vol/Pp/Date	Document Identification	Fact/Datum (Usually abstracted and/or paraphrased)
CONF/14,986-988/26 Feb 74	Memo for DASD (I&L) from Chmn, DDESB	Memo deals with homeporting of commissioned naval ammunition cargo ships and gives Board's view on current status of problem.
CONF/15,043-15,151/6 Mar 74	Verbatim Transcript, DDESB Meeting #267	Meeting was called to consider Navy request for facility siting at less than explosives safety standards. Material was of classified material since it pertained to readiness of forces and entire proceedings were classified CONFIDENTIAL.

APPENDIX C

INDEX TO SUBJECTS DISCUSSED IN DDESB HISTORICAL VOLUMES

Since late in the 1940's, the Secretary to the Chairman, DDESB,* has maintained and continually updated a subject-matter index of the data contained in the 41 Board historical volumes studied. Those index cards relating to volumes dated 1946 onward are filed separately at the DDESB from those up to and including the year 1945, but all are under the supervision of the Secretary to the Chairman.* Data on these cards are unclassified. Information reported on index cards titled "TENDERS" and "TORPEDOES" was previously summarized in Table A-3. The headings on all these cards are shown alphabetically below in Table C-1. Cards from 1946 to the present appear on pages 206 to 223, inclusive; up to and including 1946 on pages 224 to 229, inclusive.

* Personal Communication: Ms. B. J. Mast, Office of the Chairman, DDESB, 31 January 1977.

Table C-1 (Continued)

ARMCO MAGAZINES
ARMY AMMUNITION MAINTENANCE FACILITY
ARMY MEMBER, DDESB
ASSISTANCE OFFERED TO SERVICES
ATKINS, CAPT G.T., USN

ATLAS-TITAN
ATOMIC WEAPONS STORAGE FACILITIES
ATTORNEY GENERAL
AUGMENTATION OF SECRETARIAT
AVALANCHE CONTROL

AVON PARK BOMBING RANGE
AZORES

B

BADGER ARMY AMMUNITION PLANT
BADLANDS AIR FORCE RANGE, SD
BALBOA, C.Z., NAD
BANGORR, WASHINGTON
BARRICADES

BARTLETT, CAPT BRADFORD, USN
BAYONNE, NJ, MILITARY OCEAN TERMINAL
CAMP BEALL, CA
BEAVER, OREGON
BELGIUM

BENECIA ARSENAL
BENIGNO, LTC B.B., USAF
BENSON, ARIZONA
BERMUDA, U.S. NAVAL STATION
BERTHING OF AMMUNITION SHIPS

BIG MOMMA
BIG PAPA
BIRETTA, COL A.A.
BISHOFF, FREDERICK M.
BLACKBURN, JAMES W.

BLACK HILLS ORDNANCE DEPOT
BLAST INSTRUMENTATION OF MISSILE TEST AND LAUNCH STANDS
BLAST LOADING, EFFECT ON STRUCTURES AND VEHICLES
FORT BLISS, TEXAS
BOARD MEMBERS RESPONSIBILITIES

Table C-1 (Continued)

BOMARC
BOMB THREATS
BOSSIER BASE
BRAITHWAITE, LA
BREEDING, MR. CHARLES A.

BRIEFING OF DEPUTY ASSISTANT SECRETARY OF DEFENSE (P&I)
BROBST, COMDR WILLIAM A., USNR
BUCKLEY FIELD, COLORADO
BUDGET
BURDEN, CAPT JAMES D., USN

BURIED AMMUNITION, EXPLOSIVES AND HAZARDOUS MATERIALS
BURNING GROUND PROCEDURES

C

CAERWENT STORAGE AREA, UK
CAMERON, COL WILLIAM III, USAF
FORT CAMPBELL, KY
FORT CAMPBELL
CANCER, INCREASED INCIDENCE OF

CANNON AFB
CARBONYL CHLORIDE
CARIBBEAN
CARNEY'S POINT, NJ, E.I. DU PONT DE NEMOURS & CO PLANT
CAST LOADED MINE CASES

CASTNER RANGE
CAVE STORAGE
CAVEN POINT, NY
CBR AGENTS
CHAIRMAN'S ANNUAL REPORT

CHAIRMAN'S DECISIONS
CHARLESTON, SC
CHARTER
CHEATHAM ANNEX
CHEMICAL

CHEMICAL & BIOLOGICAL
CHEMICAL WARFARE
CHEMICAL CORPS
CHEMICAL FUZE
CHESTERTOWN, MD, EXPLOSION

Table C-1 (Continued)

CHINA, REPUBLIC OF
CINCPAC
CIVIC GROUP VISITS
CIVIL DEFENSE
CLASS 7 MATERIAL

CLASSIFICATION YARDS
COAST ARTILLERY
COAST GUARD
COLORADO
COMBATANT SHIPS

COMMENDATION, LETTER OF
COMMERCIAL EXPLOSIVES, SHIPMENT OF THRU NAVY FACILITIES
CONCORD, CA
CONCORD, NEW ORLEANS POE
CONFIDENTIALITY OF MINUTES OF DDESB FORMAL MEETINGS

CONNELLY, JOHN W.
CONSOLIDATED STORAGE OF AMMUNITION
CONSOLIDATION OF DOD DIRECTIVES AND INSTRUCTIONS
CONSTRUCTION CONTRACTOR PERSONNEL ON MILITARY RESERVATIONS
CONSTRUCTION PLANS

CONSULTANTS
CONTAINER CONCEPT FOR SHIPPING HAZARDOUS MATERIALS
CONTAMINATED LANDS
CONTRACTORS SAFETY MANUAL
CONTRACTS

CONWAY, COL H.J., USA
CAMP COOKE, CA
COOPER, COL E.B., USAF
COORDINATION WITH ASESB
CORAK, COL GEORGE J., USAF

CORNHUSKER ORDNANCE PLAN T
CORRELL, COL PAUL P., USAF
COSTABILE, COL R.C., USA
CRANE, INDIANA, USNAD
CAMP CROFT

CUBI POINT, NAVAL AIR STATION, P.I.
CULEBRA (ISLAND), PUERTO RICO
CURRENTS, COL RONALD B., USA
CURRENT STATUS OF EXPLOSIVES SAFETY
FORT CUSTER, MICHIGAN

Table C-1 (Continued)

D

DAHLGREN, VA NAVAL WEAPONS LABORATORY
DASA
DAVIS, CAPT G.J., USN
DCAS
DDESB - MEETINGS, MISSION, DUTIES, ETC.

DDESB - MEMBERSHIP
DDESB - NAME
DDESB - ORGANIZATION
DDESB - PERSONNEL, ETC.
DDESB - RELATIONSHIP WITH OTHER AGENCIES

DEEP WATER DUMP OF MUNITIONS
DELONGE, LTC M.E.
DELUGE SYSTEMS
DEMILITARIZATION
DENVER, CO

DENVER RESEARCH INSTITUTE
DETONATOR TEST PROTECTIVE SHIELDING
FORT DETRICK, MD
DICK, MR. F.F.
DISPOSAL OF LAND HELD BY NAVY

DISPOSAL OF MUNITIONS
DISSEMINATION OF NON-REGULATORY INFORMATION
DISTRICT OF COLUMBIA
DIVIDING WALLS
DNA (DEFENSE NUCLEAR AGENCY)

DOD ADOPTION OF THE NON-NUCLEAR SAFETY GROUP CONCEPT
DOD AMMUNITION AND EXPLOSIVES SAFETY STANDARDS
DOD DIRECTIVES AND INSTRUCTIONS
DOD EXPLOSIVES SAFETY REQUIREMENTS
DOD SAFETY POLICY

DREYER, CAPT O.F., USN
DSA
DUAL-PURPOSE ELECTRONIC DEVICE
DULUTH INTERNATIONAL AIRPORT, MINNESOTA
DYNAMITE

E

EARLE, NJ, NAVAL AMMUNITION DEPOT
EARTH FILL IN BARRICADES
EINSEL, COL DAVID W., JR., USA
ELECTRICAL TRANSMISSION LINES
ELECTRO-EXPLOSIVE DEVICES

Table C-1 (Continued)

ELECTROMAGNETIC RADIATION HAZARDS
ELLSWORTH AFB, SOUTH DAKOTA
ELWELL, COL R.L., USAF
EMIG, LTC N.M.
ENABLING LEGISLATION

ENDSLEY, MR. DONALD E.
ENVIRONMENTAL
ENVIRONMENTAL DIFFERENTIAL PAY PLAN
EOD SCHOOL, NPP INDIAN HEAD, MD
EVANS, LOUIS C.

EXCESSIVE STORAGE OF MASS DETONATING AMMUNITION (DOD LIMITATIONS)
EXPLOSION EFFECTS CALCULATOR
EXPLOSIVE FILLS
EXPLOSIVE SAFETY CONTROL

F

FACILITIES FOR UNLOADING AMMUNITION
FAIRFIELD-SUISUM AFB, CA
FALL-OUT SHELTERS
FEAZELL, G.L.
FEDERAL...

FEDERAL REGISTER
FIELD STORAGE OF AMMUNITION
FINCKE, COL R.T., USAF
FINLAND
FIRE BOAT/TUG REQUIREMENTS

FIREFIGHTING INSTRUCTIONS
FIRES AND EXPLOSIONS
FLACK, D. WAYNE
FLOETE MEMORANDUM
FLUOROLUBE

FLYING GLASS HAZARD
FOREIGN NATIONALS
FORRESTAL, USS
FRAGMENTATION
FRAGMENT HAZARDS FROM SMALL QUANTITIES OF CLASS 7 MATERIAL

FRANCE
FRESNO MUNICIPAL AIRPORT, CA
FUEL/AIR MIXTURES
FUNDING, RDT&E
FUNDING, TDY

FUZE, CHEMICAL, M600

Table C-1 (Continued)

G

GAGES
GAYLER CAPT E.R., USN
GEARHART-OWEN INDUSTRIES, INC.
GEHRING, MR. J.H.
GERMAN BUNKERS

GERMANY
GILLESPIE, COL K.W.
GLASS AND PLASTER
GOLDENBERG, COL SAM, JR., USAF
GOODELL, COL J.B., USA

GORNALL, COL JOHN L., USAF
GRANDFATHER CLAUSE
GREEN BOOK
GREENVILLE AFB
GRENADE RANGES

GRIFFIN, CAPT JOHN J.
GRIZZLY BAY, MONTEZUMA SLOUGH AND PROTRERO HILLS
GROTON, CONN, NAVAL SUBMARINE BASE
GROUNDING OF RAILROAD TRACKS
GSA 11508 ACTIONS

GSA LAND ACTIONS
GUAM
GUANTONAMO BAY, CUBA, NOB
GUIDED MISSILE PROPELLANTS

H

HOUSE DOCUMENT 199
H.R. 323
H.R. 18912
H.R. 4020
H.R. 4591

HALL, COL DALE C., USA
HALL, COMMODORE NORMAN B., USCG
HAMILTON, ANDREW W., COL, OC, USA
HARBOR DEFENSE
HARDIN, COL HAROLD F., JR, USA

Table C-1 (Continued)

HARRIS, HENRY F.
HASTING, NEBRASKA, NAD
HAWAII
HAWKINS POINT, BALTIMORE, MD
HAWTHORNE, NEVADA, NAD

HAYDEN, COL CHARLES W., USA
HAZARD CLASSIFICATION OF EXPLOSIVES
HAZARDS REDUCTION WORK GROUP
HAZARDOUS WASTE MANAGEMENT ACT
HEALTH AND SAFETY CRITERIA

HEINRICH, MAJ ERICK, ORD CORPS, GERMAN ARMY
HELFRICH, C PT N.A.
HERRING, CAPT L.R., USN
HERRING, VERNON H.
HICKS, COL STANFORD R., USA

HIGH EXPLOSIVE YIELD TESTS
HIKEL, COL T.R., USAF
HILL AFB, UTAH
HILLYER, LTC W.K., USAF
HOLLY, COL GEORGE J., JR., USA

HOLM, LTC C.P.
HOLSTON ORDNANCE WORKS, TENN
HOMEPORTING OF AMMUNITION SHIPS
HORSESTALL STORAGE (AIR FORCE)
HOWARD, CAPT JOHN N., USN

HUFFMAN, COL JAMES P., JR., USAF

I

ICC
IGLOO
ILSLEY, DR. RALPH
IMPLEMENTATION OF CHARTER BY SERVICES
INDIANA ARMY AMMUNITION PLANT

INDIAN HEAD, MD, NPF
INSTRUCTIONS FOR COMMANDERS OF AIRCRAFT & DRIVERS OF MOTOR VEHICLES
TRANSPORTING EXPLOSIVES AND CERTAIN OTHER DANGEROUS ARTICLES
INTENT OF CONGRESS
INTERCHANGE POINT
INTERIOR DEPARTMENT

Table C-1 (Continued)

INTERDEPARTMENTAL SAFETY COUNCIL
INTERMOUNTAIN RESEARCH AND ENGINEERING CO., INC.
INTER-SERVICE TACTICAL FACILITIES AND INTER-SERVICE OR CONTRACTOR SUPPORT FACILITIES
IOWA ARMY AMMUNITION PLANT
ITALY

JANAF SOLID PROPELLANT SAFETY PANEL
JAPAN AND KOREA
JENKINS, CAPT WALTER T., USN
JOHNSON, CAPT RICHARD E., USN
JOHNSTON ISLAND

JOLIET ARSENAL
JUDSON, COL R.R., USA
JUSTICE DEPARTMENT

K

KANSAS ARMY AMMUNITION PLANT
KARNS, CAPT F.D., JR., USN
KELLEY, PHILIP G., JR., COL, USA
KENNCO
KENVIL, NJ

KEYPORT, WASHINGTON NAVAL TORPEDO STATION
KEY WEST, FL
KINDLEY AIR FORCE BASE, BERMUDA
KING, CAPT G.E., USN
KING'S BAY, GA

KIRKPATRICK, MR. M.D.
KIRTLAND AFB, NEW MEXICO
KLEIN, MR. E.L.
KLEIN, CAPT PETER R., USN
KNAPPA AND BEAVER, OREGON

KNUTSON, CAPT DONALD W., USN
KOREA

L

LAGUARDIA AIRPORT, NY
LAND RELEASE
LAUNCHINGS, MISSILE
LAUNCHING PADS
LECHLETTER, CAPT MARK B., USN

Table C-1 (Continued)

LEFAVOUR, CAPT WM. R., USN
LEGAL GUIDANCE
LIBYA, WHEELUS FIELD
LIGHTNING PROTECTION
LIQUID PROPELLANTS

LONE STAR ARMY AMMUNITION PLANT, TEXAS
LONG BEACH, CA
LONGO, COL VITO, USAF
LONGVIEW, WASHINGTON
LOS ALAMOS SCIENTIFIC LABORATORY, NM

LOS ANGELES PORT
LOSS OF LIFE THROUGH MAJOR EXPLOSIONS
LOUISIANA ARMY AMMUNITION PLANT
LOVELANC, NM
LOWRY AFB

Mc

McALESTER, OKLAHOMA, NAVAL AMMUNITION DEPOT
McCANTS, LELAND S., COL, USAF
FORT McCLELLAN, ALABAMA
McNAMARA, FREDERICK N.

M

M117 BOMBS
M-55 ROCKET
MK 48
MK 81 AND 82 BOMBS
MAGAZINES

MANDREL REMOVAL
MANUAL FOR DESIGN OF PROTECTIVE STRUCTURES
MANUFACTURE...
MANUFACTURING SITES, ZONING FOR
MARE ISLAND, CALIFORNIA, NAVAL AMMUNITION DEPOT

MARINE CORPS
MARSH, HENRY N.
MATS
MAXWELL, MR. O.D.
MAY, LTC RICHARD H., USAF

Table C-1 (Continued)

MAYPORT, US NAVAL STATION, FLORIDA
MB-1 ROCKETS
FORT MEADE, MD
MEARLS, LTC W.J.
MEETINGS OF ASESB

MELVILLE, R.I.
MILES, COL F.H., JR.
MILITARY AIR TRANSPORT SERVICE
MILITARY TRAFFIC SERVICES
MILLER, COL H.E.

MINES
MINIMUM TEST CRITERIA
MOBILIZATION PLAN
MODULE STORAGE (BIG PAPA, SEA REVETMENTS, ETC.)
MODERNIZATION OF AMMUNITION PLANTS

MUKILTEO, WASHINGTON
MULLANE, LT COMDR, L.W.
MUNITIONS BOARD
MUNITIONS CARRIERS INTERCHANGE POINT

N

NASA
NATIONAL ADVISORY COMMITTEE FOR AERONAUTICS
NATO
NAVY
NAVY STAFF MEMBER, DDESB

NEW LONDON, CONN
NEWMARK REPORT
NEW ORLEANS, LA, PORT OF
NEWPORT, RI, NTS
NEW YORK ACADEMY OF SCIENCES

NEW YORK CITY
NEW YORK PORT
NIKE HERCULES
NIKE SPRINT
NIKE SITES

NON-UNIFORMITY IN SERVICE REGULATIONS
NORFOLK, VA
NORTON, AFB, CA
NOTIFICATION OF SECRETARIES OF HAZARDS
NUCLEAR POWER PLANTS

Table C-1 (Continued)

NUCLEAR SAFETY WORKING GROUP

O

OAHU, T.H.
O'BRIEN, LTC L.M., USAF
OCCUPATIONAL SAFETY & HEALTH ACT (OSHA)
OCEAN DISPOSAL OF MUNITIONS
OKINAWA

OLSEN, CAPT L.R., USN
OUTDOOR STORAGE
OVERSEAS SHIPMENTS
OVERSEAS STANDARDS
OVERSEAS SURVEYS

OXIDIZERS & FUELS

P

PANAMA CANAL ZONE
PATTERSON-MOOS DIV., UNIVERSAL WINDING CORP.
PEARL HARBOR COMPLEX, HAWAII
PENTOLITE LOADED AMMUNITION
PERRIS, LTC WALTER H., USAF

PERSON, COL HERBERT C.
PETTEBONE, CAPT E.R., USN
PHARES, CAPT J.L., USN
PHILIPPINE ISLANDS
PICATINNY ARSENAL

P & W EVALUATIONS
PIERS AND WHARVES MANUAL
PIGGY-BACK
PINE BLUFF ARSENAL, ARKANSAS
PINECASTLE ELECTRONIC WARFARE RANGE COMPLEX

PLACARDING
PLASTER
PLUM TREE ISLAND BOMBING RANGE
POLARIS SUBMARINE (SSBN)
POLICY

POL STANDARDS
PORT CHICAGO, CA
PORT FACILITIES
PORTUGAL
POSEIDON

Table C-1 (Continued)

POTRERO HILLS, MONTEZUMA SLOUGH AND GRIZZLY BAY, CA
POWER LINES
PRAIRIE FLAT
PRIVILEGED BOARD RECORDS
PROBLEMS ENCOUNTERED BY CONTRACTORS

PROPELLEX CORP., EDWARDSVILLE, IL
PROTECTIVE BARRIER SYSTEM FOR MUNITIONS STORAGE
PROTECTIVE CONSTRUCTION POLICY TO BE APPLIED IN REVIEW OF SITE PLANS
PUERTO RICO

Q

Q-CLEARANCE
Q-D STANDARDS FOR AIRCRAFT RUNWAYS
Q-D STANDARDS FOR AMMUNITION AND EXPLOSIVES
QUANTITY-DISTANCE STANDARDS FOR INTERCHANGE, CLASSIFICATION & HOLDING YARDS
Q-D STANDARDS FOR PIERS AND SHIPS

Q-D STANDARDS FOR PIERS AND WHARVES
QUARRY BLASTING
QUEEN, WALTER G.
QUINN, CAPT JOHN, USN

R

RADFORM AAP, VA
RADIO-FREQUENCY HAZARDS
RAIL CARS TRANSPORTING CLASS A EXPLOSIVES
RAIL LOADING AND UNLOADING
RAILROADS

RAMEY AIR FORCE BASE, P.R.
RANGE SAFETY CRITERIA
RARITAN ARSENAL
REDSTONE ARSENAL
REDUCTION OF HAZARDS

REED, COL C.S., USA
REGROUPING OF AMMUNITION
REPORTING PROCEDURES
RESEARCH PROGRAM
RESTORAGE

Table C-1 (Continued)

RETROGRADE MOVEMENT OF MUNITIONS
RETURNED AMMUNITION
RHODES, COL CHARLES W., USAF
RICHARDSON, COL JOSEPH M., OC, USA
FORT RILEY, KANSAS

RINGSBY TRUCK LINES
FORT RITCHIE, MD
ROCKET, 3.5 INCH M28
ROCKETS
ROCKET CATAPULT MK 1

ROCKY MOUNTAIN ARSENAL
RODMAN, C.Z., NAVAL STATION
ROGERS, MR. JESSE S.
ROSEBURG, OREGON
ROSEVILLE, CA

ROYLANCE, MR. HERBERT M.
RUSHING, J.D.

S

S. 2074
S STRUCTURES
SAC SATELLITE BASING - NEW LOOK II
SAFETY DISTANCES
SAFETY & HEALTH ACT

SAFETY MANAGEMENT WITHIN THE DOD
SAFETY RULES FOR PEACETIME OPERATIONS
SAIPAN
SAMOA
SANDIA BASE, NEW MEXICO

SAN DIEGO, CA
SAN FRANCISCO, CA, PORT
SAVAGE, W.R.
SAVANNA ORDNANCE DEPOT
SCIENTIFIC PANEL

SCRAP MATERIALS
SEAFARER
SEAL BEACH, CA, NA&ND
SECURITY
SELLA BAY, GUAM

Table C-1 (Continued)

SEMINAR
SEPARATION OF STACKS OF HE PROJECTILES
SEPARATION OF STANDARD IGLOO MAGAZINES
SEQUENTIAL EXPLOSIONS (DETONATIONS)
"SERIOUS"

SHIPMENT OF EXPLOSIVES
SHIPPING CONTAINERS
SHIPS
SICILY
SIERRA ARMY DEPOT, CA

SIGNIFICANT ACTIVITIES, REPORT OF
FORT SILL, OKLAHOMA
SIMULTANEITY
SINGLE MANAGER ASSIGNMENT FOR CONVENTIONAL AMMUNITION
SINGLETERRY, MR. C.C.

SITE PLANS
SMALL ARMS AMMUNITION AND EXPLOSIVES
SMITH, MR. C.B.
SMOKELESS POWDER
SOLID PROPELLANTS

SONIC BOOM
SOUTH AMBOY
SOUTH DAKOTA
SOUTHEAST ASIA
SOUTHERN PACIFIC TRANSPORTATION COMPANY VS JOSEPH PUJALS ET AL

SPAIN
SPALDING, LT COMDR J.
SPECIAL INSTRUCTIONS FOR COMMANDERS OF AIRCRAFT AND DRIVERS OF MOTOR VEHICLES TRANSPORTING EXPLOSIVES AND CERTAIN OTHER DANGEROUS ARTICLES
SPECIAL INSTRUCTIONS FOR DRIVERS OF MOTOR VEHICLES AND COMMANDERS OF AIRCRAFT TRANSPORTING EXPLOSIVES AND CERTAIN OTHER DANGEROUS ARTICLES
SPECIAL REGULATIONS

SPECIAL WEAPONS
SPRINKLERS, AUTOMATIC
STANDARD SYSTEM FOR TYPE CLASSIFICATION OF EXPLOSIVE STORAGE STRUCTURES
CAMP STANLEY, SAN ANTONIO, TEXAS
STANLEY, COMDR JOHN T.

STATE LAWS
STATUS OF EXPLOSIVES SAFETY
STEEL ARCH IGLOO TESTS
STILLMAN, CAPT CARL F., USN
ST. JULIENS CREEK, VA, NAVAL AMMUNITION DEPOT

Table C-1 (Continued)

STORAGE OF EXPLOSIVES AND AMMUNITION
STORAGE OF MUNITIONS IN GERMAN MAGAZINES
STRADLEY MAGAZINES
SUBDIVIDED IGLOOS
SUBMISSION OF SITE PLANS

SUNNY POINT OCEAN TERMINAL, NC
SUPPORT FACILITIES AND TACTICAL FACILITIES
SURPLUS MILITARY EXPLOSIVES
SURVEYS

T

TAB VEE SHELTERS PROGRAM IN USAFE
TAIWAN
TECHNICAL INFORMATION BULLETINS
TECHNICAL PAPER
TELEPHONE NOTIFICATION OF FIRES AND EXPLOSIONS

TENDERS
TENNESSEE
TERLIZZI, MR. P.M.
TERMINAL FACILITIES GUIDE
TERRITORIAL JURISDICTION

TERRORIST THREATS
TESTS
THAILAND
THEODORE, ALABAMA, NAVAL MAGAZINE
THERMAL EFFECTS STANDARDS

THIOKOL CHEMICAL CORP
FORT TILDEN, NEW YORK
TIMMES, LTC CHARLES J.
TINIAN ISLANDS
TITAN

TNT BLOCKS
TNT EQUIVALENCIES
TOBAR, NEVADA
TOOELE ARMY DEPOT, UTAH
TORPEDOES

TOWNES, LTC MORTON E.
TOXICITY
TRAILERS-ON-FLAT CARS
TRAINING PROGRAM
TRANSFER OF SEACOAST AMMUNITION

Table C-1 (Continued)

TRANSPORTABLE DISPOSAL SYSTEM
TRANSPORTATION OF DANGEROUS ARTICLES BY AIRCRAFT
TRANSPORTATION OF EXPLOSIVES
TRAVEL
TRAVIS AFB

TRIDENT
TRINIDAD
TRI-STATE MOTOR TRANSIT COMPANT
TRUCK INSPECTION FORM, DD 626
TRUCK INTERCHANGE YARDS, Q-D STANDARDS FOR

TRUST TERRITORY PACIFIC ISLANDS
TUBBS ISLAND, CA
TULALIP AMMUNITION AND BACKUP STORAGE DEPOT
TURKEY

U

UNBARRICADED INHABITED BUILDING DISTANCE
UNDERGROUND STORAGE
"UNDUE"
UNEXPLODED ORDNANCE
UNIFORM DEPARTMENT OF DEFENSE HEALTH AND SAFETY CRITERIA

UNIFORM STATE LAW FOR EXPLOSIVES
UNITED KINGDOM
UNITED NATIONS ORGANIZATION
URBANNA, OHIO
URS CORPORATION

USARPAC
UTAH
UTILITIES IN AMMUNITION STORAGE AREAS

V

VESSELS ARRIVING U.S. PORTS WITH AMMUNITION CARGOES - DISCHARGE OF
VETERANS ADMINISTRATION MEMBER
VICKSBURG CHEMICAL COMPANY
VIETNAM

W

WAIVERS
WALKER, CAPT EDWARD K.
WALSH, MAJ FRANK J.
WAR ASSETS ADMINISTRATION
WARD, LTC N.P.

Table C-1 (Continued)

WATSON, COL G.G., USA
WATTS, LTC R.S.
WEAPONS SENSITIVITY HANDBOOK
WEINWOTH, MAX
WELLER, MR. W.G.

WELLS, LTC A.C., JR.
WELLS, LTC HAROLD E., USAF
WESTERN PACIFIC RAILROAD
WESTERVELT, CAPT JOHN D., USN
WHITE, LTC LESLIE M., USAF

WHITE SANDS PROVING GROUND, NM
WHITTEMORE, COL KENNETH S., USA
WIESENBERG, WILLIAM M.
WIGGER, GEORGE F.
WIGHT, RICHARD L.

WORK GROUP - ASESB
WORK GROUP TO DETERMINE THE EFFECTS OF ACCIDENTAL EXPLOSIONS ON ENVIRONMENT, AND TO DEVELOP MEANS TO REDUCE HAZARDS TO PERSONNEL & DAMAGE TO FACILITIES
WORK GROUP TO DEVELOP UNIFORM TRANSPORT PLACARDING SYSTEM - EXPLOSIVES AND DANGEROUS MATERIALS
WORK GROUP ON MINIMUM TEST CRITERIA FOR SOLID PROPELLANTS
WORK GROUP ON Q-D STANDARDS FOR BULK STORAGE OF LIQUID PROPELLANTS

WORK GROUP FOR REDUCTION OF HAZARDS
WORK GROUP TO STUDY Q-D REQUIREMENTS FOR LARGE SOLID PROPELLANT MISSILE MOTORS
WORK GROUP FOR REVISION OF FIRE-FIGHTING INSTRUCTIONS FOR MILITARY AMMUNITION AND EXPLOSIVES DURING TRANSIT
WORK GROUP FOR THE REVISION OF AMMUNITION HAZARD CLASSES
WORTHING, COL LEIGH W., USA

X,Y,Z

YORKTOWN, VA, NAVAL MINE DEPOT
YURT MAGAZINES
Z-I ATOMIC WEAPONS STORAGE FACILITIES
ZONING FOR MANUFACTURING SITES

NOTE: INDEX CARDS UP TO AND INCLUDING 1945 HAVE BEEN REMOVED FROM THE BOX LOCATED NEAR THE DESK OF THE SECRETARY TO THE CHAIRMAN, DDESB, AND PLACED IN BOTTOM DRAWER, SAFE #100. THIS WAS DONE TO MAKE ROOM FOR MORE CURRENT MATERIALS. THESE CARDS ARE, HOWEVER, UNCLASSIFIED AND THEIR HEADINGS APPEAR ON THE FOLLOWING PAGES.

Table C-1 (Continued)

A

ABERDEEN, WASHINGTON
ANNISTON ORDNANCE DEPOT
ARMY AMMUNITION
ARMY GROUND FORCE INSTALLATIONS
ATLANTIC COAST PORTS

B

BACK-UP DEPOTS
BAKER, LTC A.L., TC, USA
BAKER, CAPT ROBERT D.
BAKER, LT W.P.
BALDWIN, L.I., NOP

BALTIMORE
BANDHOLTZ, MAJ C.H.
BARKSDALE FIELD
BATIQUITOS LAGOON
BEAVER, LT JAMES A.

BELLINGHAM AAF
BI-MONTHLY REPORTS OF PROGRESS
BOMBAY DISASTER
BOSTON POE
CAMP BOWIE

BREMERTON, WASHINGTON, NAD
BRICKER, BRIG GEN E.D., USA
BRICKER, COL EDWIN L.
BROOK, LT (J.G.) ERNEST A., USN
BROOKLYN BASE PORT OF EMBARKATION

BRUNS, COMDR H.F. (CEC) USN
BUELL, LTC R.C.
BUNZE, MAJ HARRY F.
BURRELL, COMDR GLENN S. (CEC) USN
BUSH RIVER AMMUNITION STORAGE PROJECT, EDGEWOOD ARSENAL, MD

BUTLER, WILLIAM T.

C

CALIFORNIA POINT
CAMDEN, ARKANSAS
CARSON, MAJ C.V.
CASTLE ISLAND FACILITY, BOSTON, MA
CIRCULARS

Table C-1 (Continued)

CLAREMONT TERMINAL
CLASSIFIED MATERIAL
COBB, MAJ WM. M.
COCO SOLO, C.Z., NAD
CONCORD, CALIFORNIA, NAVAL AMMUNITION DEPOT

COOS BAY, OREGON
COUPE, COMDR W.S.
COWLING, LT COMDR J.K.
CROSS, LT VERNON E.
CULP, BYRON J.

CURTIS BAY ORDNANCE DEPOT

D

DAHLGREN, VA, NPG
DANGEROUS ACCUMULATION OF CARS
DAVIDSON, COMDR W.E., USN
DAWSON
DELAWARE ORDNANCE DEPOT, NJ

LAKE DENMARK, NJ, NAD
DOVER AAB
DUNN, COL T.L.

E

EARLE, N.J., NAD
ECKHARDT, CRD. J.C.
CAMP EDWARDS, MA
EXPLOSIVES SAFETY ACT
EXPLOSIVES SAFETY LAWS

F

FORT BRAGG, NC
FALL BROOK, CA, NAD
FIELD, CROSBY
FLORIDA PORTS
FORT ETHAN ALLEN, VT

FORT LAFAYETTE, NY, NAD
FORT MIFFLIN, PA, NAD
FORT ROSECRANS, CA
FORT WINGATE, ARIZONA
FREEMAN, COL JAMES W.

Table C-1 (Continued)

G

GASOLINE STORAGE FACILITIES
GENERAL ELECTRIC
GRAVES END BAY
GUGGENHEIM, MR. MORRIS
GULICK, CRD M.A., USCG

H

HANDLING OF MILITARY EXPLOSIVES ACROSS COMMERCIAL DOCKS
HIGH EXPLOSIVES...
HINGHAM, MA, NAD
HOBOKEN, NJ
HOF, MAJ GEN

HOG ISLAND, PHILADELPHIA, PA
HOLMES, MAJ J.G., USA
HOLSINGER, COMDR RAYMOND W.
CAMP HOOD, TEXAS
HUNTER, LT COMDR A.D.

I

INTERPRETATION BY JAG
INVESTIGATIONS INTO EXPLOSIONS
IONA ISLAND, NEW YORK, NAD

J

JACKSONVILLE, FLORIDA, NAVAL AIR STATION
JOHNSON, CRD L.P., USN
FORT LAFAYETTE, NY

L

LANGLEY FIELD, VA
LEND LEASE SHIPMENTS
CAMP LIVINGSTON
LYNN, MAJ E.A., USA

Mc, Mac

McCARTHY, LT COMDR J.
McCHORD AAF
McFARLAND, COL EARL
McNARY, MAJ C.H.
MacDILL FIELD, FLORIDA

MacMORLAND, MAJ F.E., USA

Table C-1 (Continued)

M

MALTA, NY
MARCH FIELD, CA
MIAMI, FLORIDA
MILLER, LT COMDR J.M., USN
MISSISSIPPI RIVER

MITCHELL FIELD
MOBILE

N

NANSEMOND ORDNANCE DEPOT
NEWARK, DELAWARE
NOBLE, LT COMDR A.G., USN

O

OAKLAND, CA
OGDEN ARSENAL, UTAH
ORDNANCE SAFETY MANUAL
ORLANDO AIR BASE, FL
OSTRICH BAY, WASHINGTON

P

PACIFIC COAST
PACIFIC NORTHWEST
PAINE AA FIELD
PARR TERMINAL
PECKHAM

PENSACOLA, FL, NAVAL AIR STATION
PHILADELPHIA, PA
PIG POINT ORDNANCE DEPOT, VA
PLANS FOR AMMO HANDLING AND STORAGE FACILITIES
PLATFORMS

POCATELLO, IDAHO, NAVAL ORDNANCE PLANT
PORTS OF EMBARKATION
PORTLAND, MAINE
PORTLAND, OREGON SUBPORT
POSTS, CAMPS AND STATIONS

PRATT AAF
PUGET SOUND, WASHINGTON
PURCHASE OF LAND
PUCKETT, CAPT L.A.

Table C-1 (Continued)

Q

QUORUM

R

RAVENNA ARSENAL
RICHMOND, CA
CAMP JOSEPH T. ROBINSON
ROCK ISLAND ARSENAL, NJ
ROOSEVELT BASE, TERMINAL ISLAND, CA

CAMP RUCKER, OZARK, ALABAMA
RYKER, CAPT DONALD W.

S

SAFETY LAWS FOR THE STATES
SAFETY RESPONSIBILITY OF THE BOARD WITH RESPECT TO THE HANDLING AND STORAGE OF CLASSIFIED MATERIALS BY ARMY AND NAVY AMMUNITION FACILITIES
SALINAS AAF
SALT LAKE CRATER
SAN ANTONIO, TEXAS

SAND BAG REVETMENTS
SANDY HOOK
SAN JACINTO ORDNANCE DEPOT
SAN PEDRO, CA
SAVANNAH, GA

SAWYER, CAPT M.A.
SEACOAST FORTIFICATIONS
SEAL HARBOR
SEARSPORT, MAINE
SEATTLE, WASHINGTON, NAS

SENECA ORDNANCE DEPOT, NY
SEWARD TERRITORY
SEYMOURS NARROWS, B.C.
SHINKLE, BRIG GEN EDWARD M.
SHIPMENT OF LOADED PROJECTILES

SHUMAKER, ARKANSAS, NOP
SHUMAKER, LT COMDR SAMUEL B.
SMITH, COMDR N.M.
SMOKY HILL AAF
SOUTH BOCA GRANDA, FLORIDA

Table C-1 (Continued)

SPECIAL ORDERS
STEESE, COL. CHARLES M.
CAMP STANLEY, TEXAS
STORAGE OF AMMUNITION, VE DAY TO VE + 3[illegible]
SUBMARINE MINE EXPLOSIVES AND OPERATIONS

SUISUM BAY, CA

T

TAMPA, FLORIDA
TERMINAL ISLAND, CA
TIJUANA RIVER SITE
TOAL, COMMANDER F.C.
TOTAL LOAD THRU PORTS

TRAINING CIRCULAR 47
TRANSFER SHEDS & PLATFORMS
TRIUMPH EXPLOSIVES, INC., ELKTON, MD

U

UNDUE ACCUMULATION OF CARS LOADED WITH ARMY AND NAVY AMMUNITION
UNION BARGE LINE TERMINAL FACILITIES

V

VAN NUYS ARMY AIR FIELD

W

WADDAH ISLAND, WASHINGTON
WARD, CAPT J.H.
WAYCROSS, GA
WELLBORN, LT CHARLES, JR., USN
WELLS, COL L.F.

WEST COAST PORTS
WILSON, CAPT JAMES D.
WOLTERS, CAMP
WOODEN BOMB CRATES
WOODYARD, CAPT EDWARD L.

WRECKS

X,Y,Z

YOUNG, COL WM. C.
YUKON

THIS PAGE INTENTIONALLY LEFT BLANK.

APPENDIX D

REPRODUCED MATERIALS FROM THE "MINUTES OF MEETINGS" OF THE DDESB

Although parts of the 41 volumes of the "Minutes of Meetings" of the DDESB are considered privileged information (most notably the verbatim transcripts of formal Board meetings), much additional information contained in these documents is not. Those documents in the Board's historical volumes considered of some special interest, and which were not privileged, were reproduced with the permission and assistance of Board personnel. Table A-4 in Appendix A lists the 14 documents reproduced. They appear below in this appendix.

For the most part, the choice of documents was based on (1) the special relevance or historical significance of the documents, (2) their description of the organization or workings of the Board, or (3) the comprehensive and well-phrased fashion in which the document summed up materials related to the subject project.

ARMED SERVICES EXPLOSIVES SAFETY BOARD
Washington 25, D. C.

In reply refer to
ASESB-579-55/1

21 October 1955

MEMORANDUM FOR COLONEL R. R. JUDSON, USA, OCO
CAPTAIN J. H. BRANDT, USN, BUORD
COLONEL J. G. DUNTEY, USAF, AFMSS-AR

SUBJECT: Decisions of the Chairman on Matters in Which Board Members Are Not in Unanimous Agreement with Reference to Inhabited Building Quantity-Distance Tables for Mass-Detonating Explosives

1. The American Table of Distances was adopted by the Army and Navy in 1928 and their action was subsequently approved by the Congress. These tables were originally developed in 1910 for use by private industry in the United States and with minor revisions are still so used. They are based on providing protection to inhabited buildings against substantial structural damage. In considering the definition of substantial structural damage which was accepted, conclusions were reached from two points of view:

a. Damage to Property.

It was concluded that no damage which was readily repairable should be considered "substantial" for the purpose in view.

b. Risk to Life and Limb.

It was concluded that unless some integral portion of the building was damaged, the occupants could not be subjected to serious risks.

Such minor damage as the breaking of window glass, shaking down of plaster and possible damage by flying missiles was not considered. The tables are for barricaded explosives and when unbarricaded the distance is to be doubled. The barricaded distance is represented approximately by the formula $D=35W^{1/3}$ in which D is the distance in feet and W is the weight of explosives in pounds. Hereinafter when a numerical factor is used, it is the numerical factor of this formula. Doubling the barricaded ATD distance results in a factor of 70 (approximate) for unbarricaded explosives.

2. On 15 August 1950 the Navy, and on 7 December 1950 the Air Force accepted and later placed in effect quantity-distance standards developed by the ASESB and dated 1 April 1950. These standards which were designed to provide a reasonable degree of protection from blast effects, missiles and from flying glass, have the following pertinent provisions:

a. Unbarricaded Protection:

(1) Protection to dwellings is based on a factor of 50. Dwellings constructed in accordance with state and municipal building codes are unlikely to collapse or suffer damage other than repairable damage such as the following: extensive glass breakage; occasional door and window frames displaced and

(REPRODUCTION #1)

(Vol. 9, pp. 3148-3157, inc.)

THIS PAGE IS BEST QUALITY PRACTICABLE
FROM COPY FURNISHED TO DDC

possibly propelled into rooms; moderate plaster damage; occasional cracked or broken rafters with slight bulging of roof and occasional minor displacement of building side; occasional collapse of porch roof; damage to chimneys or separation from building; broken plumbing; occasional cracks in brick walls and some loosened brick; some damage to contents of dwelling.

(2) Fatalities to persons within buildings are considered unlikely but it is to be expected that injuries will result within buildings from flying objects such as doors, window frames and sashes, pictures, bric-a-brac; from flying glass; and, from missiles from the explosion source.

(3) If, because of occupancy or vulnerability, a reasonable degree of protection comparable to that provided for dwellings is desired, increased safety distances represented by the following factors are specified for the structures indicated:

Schools, hospitals and factories (unless equipped with safety glass or interior screens)	f 100
Large churches, theaters, railroad stations and assembly halls	f 100
Hollow tile magazines and structures	f 85
Large oil or water storage tanks with exposed wooden roofs	f 200
Large airplane hangars	f 200

(4) A constant distance of 1235 feet is specified for quantities less than 15,000 pounds based on the missile hazard.

b. Barricaded Protection:

Up to 1500 pounds, barricaded distances are the same as those specified in the unrevised ATD. From 1500 pounds to 500,000 pounds, the same distances, based on f 50, are specified for barricaded explosive sites as for unbarricaded sites.

c. Reduced Inside Inhabited Building Distance:

A maximum of 15% reduction in inhabited building distance is allowed when applied to quarters, barracks, hospitals, offices, etc. and line separations located on a military installation, provided the construction of the buildings involved is of non-wall-bearing type that offers good resistance to the peak pressures and impulses generated by the blast, and provided the buildings are oriented to minimize effects from the blast.

(REPRODUCTION #1)

THIS PAGE IS BEST QUALITY PRACTICABLE
FROM COPY FURNISHED TO DDC

3. That some provisions of these ASESB standards, adopted by the Navy and the Air Force, have proved either difficult to interpret or impractical to apply is evidenced by the following:

a. Air Force Regulation 86-6 dated 15 October 1951, "Quantity-Distance Standards for Storage of Mass Detonating Explosives," states that consideration will be given to a higher degree of protection (higher than f 50) for special targets when planning permits and it is practicable. This is certainly not the expressed or implied intent of the ASESB's 1 April 1950 standards. Also, Board representatives surveying Air Force installations have noted on many occasions that the reduced inside inhabited building distances have been applied by the Air Force without qualification as to type of construction or orientation.

b. Navy BuDocks Instruction No. 11140.1, Ch 1 dated 2 September 1955, "Ammunition Storage Standards at Naval Air Stations," disregards consideration of special targets entirely. Reduced inside inhabited building distances are specified without qualification as to type of construction or proper orientation.

c. Armed Forces Special Weapons Project publication dated 25 August 1955, "Explosives Safety Quantity-Distance Standards," disregards consideration of special targets entirely and specifies reduced inside inhabited building distance without qualification as to the type of construction or proper orientation.

4. In accordance with its charter, the ASESB for the past several years has been attempting to get the three military Services to adopt uniform standards for mass-detonating explosives. The main effort has been toward attempting to convince the Department of the Army that the ASESB standards of 1 April 1950 already accepted by the Department of the Navy and the Department of the Air Force should also be accepted by that Service. The Department of the Army has consistently declined to accept these Board standards. From a review of the record, it was apparent that the only method of establishing uniform standards would be to resort to the provisions of the Board's charter covering cases of disagreement whereby:

a. The chairman exercises his power of decision.

b. The dissenting member or members exercise the right of appeal.

c. The matter is reviewed and resolved by decision of higher authority (Assistant Secretary of Defense for Supply and Logistics).

5. In order to familiarize the chairman and new members of the Board and its staff with the problem, it was decided that a thorough study would be made of all data available on which the ATD and the Board's 1 April 1950 standards were based. This study which has extended over a period of several months has now been made and summations of all data, together with the conclusions and recommendations of the military staff have been presented to the Board members. Board members have agreed that special protective distances for special targets are not desirable. They have not, however, been able to reach unanimous agreement on the following principal matters:

(REPRODUCTION #1)

THIS PAGE IS BEST QUALITY PRACTICABLE
FROM COPY FURNISHED TO DDC

a. Inhabited building distance for unbarricaded explosives.

b. Inhabited building distance for protection from missiles for small quantities of unbarricaded explosives.

c. Inhabited building distance for barricaded explosives.

d. Use of a reduced inhabited building distance for buildings located on military installations.

These matters will be discussed and the chairman's decision on each given in the following paragraphs.

6. Inhabited Building Distance for Unbarricaded Explosives:

The positions of the Board members are as follows:

Army:	0 - 500,000 pounds	the ATD (approximately f 70)
Navy:	0 - 250,000 pounds	f 50
	250,000 - 500,000 pounds	f 70

Air Force: Same as Navy.

The area of disagreement is from 0 to 250,000 pounds.

It is obvious that the use of a distance represented by a factor of 50 without special protection for special targets as proposed by the Navy and Air Force represents a substantial reduction in safety distance from both the ATD and the ASESB's 1 April 1950 standards and requires the acceptance of a much greater risk than the Army's proposal of the American Table of Distances (factor of 70). A general comparison of the risks involved follows:

a. Structural Damage:

At a factor of 50, some structural damage may be expected to dwellings constructed in accordance with usual building codes such as broken rafters, slight displacement of the sides of frame structures, cracks with some displacement of bricks in masonry walls and occasional partial collapse of porches. At a factor of 70, this type of structural damage is not expected. However, it may occur in isolated instances to poorly maintained or flimsily constructed buildings. Structural damage to buildings and structures other than dwellings at a factor of 50 may be severe unless they are of equivalent structural strength as the dwellings referred to above. The same is true but to a lesser extent at a factor of 70, due to the greater protection provided by this distance. Within the area under consideration (0 to 500,000 lbs.), recorded instances of substantial structural damage to buildings of all types located beyond this distance are rare.

b. Superficial Damage:

The cost of repair of superficial damage will be less at a factor of 70 since damage such as displaced window frames and sashes, displaced doors and door frames, partial collapse of porch roofs will be greatly reduced.

(REPRODUCTION #1)

THIS PAGE IS BEST QUALITY PRACTICABLE
FROM COPY FURNISHED TO DDC

c. Glass Breakage:

Some reduction in the amount of glass breakage is to be expected at a factor of 70; however, injuries from flying glass may be severe at either distance.

d. Death and Injury from Blast Effects:

Fatalities are unlikely to occur at either distance. The chance of injury should be much less at a factor of 70 due to reduction of the possibility of flying objects and should consist primarily of cuts and bruises. Some broken bones may be expected at a factor of 50 from objects such as doors and window frames being propelled into rooms with considerable force.

e. Missile Hazard for Other Than Small Quantities:

The possibility of fatalities and injuries from missiles and debris projected from the source of the explosion exists at either factor. However, the probability is very much less at a factor of 70 due to the smaller number of missiles that may be expected to be projected to this distance and also to the proportionately greater area available.

Although this Board has the authority in accordance with a decision of Attorney General McGrath dated 27 October 1949 to change the American Table of Distances for Service use, or to adopt other standards, it is believed that such action should be taken only if supported by substantial and conclusive data, particularly when acceptance of a greater risk is involved. It is significant also that the American Table of Distances, still used by private industry, was originally developed to provide protection from commercial-type bulk explosives, whereas many of the military types of explosives are used and are designed to produce missiles as well as blast effects. However, there is a continuing effort by the Services to develop and utilize more powerful explosives. Another aspect of the problem which is worthy of consideration is that some military plants are operated by private industry (many more will be under full mobilization) and serious objections may be raised if contractors are requested to operate with lesser protective distances than those specified by the ATD. It should also be noted that the United States Coast Guard, in assessing quantity-distance situations involving merchant shipping and commercial waterfront facilities, apply the American Table of Distances. It is possible that the American Table of Distances may provide greater protection for some buildings than is necessary; however, it is believed that, from the history of explosions and all available data, it is the best all around reasonable distance that can be expected to provide acceptable protection to all types of buildings or structures.

In the absence of substantial and conclusive data to support the use of the lesser distance, the chairman's decision is:

THE AMERICAN TABLE OF DISTANCES SHALL BE USED TO PROVIDE INHABITED BUILDING PROTECTION FOR UNBARRICADED EXPLOSIVE CONCENTRATIONS.

(REPRODUCTION #1)

THIS PAGE IS BEST QUALITY PRACTICABLE
FROM COPY FURNISHED TO DDC

7. Inhabited Building Distance for Protection from Missiles for Small Quantities of Unbarricaded Explosives:

The positions of the Board members are as follows:

Army: A minimum mandatory missile distance is not desirable.

Air Force: A constant mandatory distance of 750 feet for quantities from 0 to 3500 pounds. (This is the distance required for blast protection for 3500 pounds at f 50.) If the above proposal is not acceptable, the Air Force will reaffirm its previous acceptance of the 1235 feet constant distance for 0 - 15,000 pounds (ASCSS 1 April 1950 standards).

Navy: Will accept either of the Air Force proposals.

The positions of the Air Force and the Navy are both based on the use of a factor of 50 to provide protection from blast effects. In the preceding paragraph, the chairman's decision was in favor of the greater distances provided by the ATD. These greater distances, although not providing complete protection from occasional missiles, do provide a high degree of protection except for quantities below 3500 pounds. The occasions in which these smaller quantities will control inhabited building distances at the typical Service manufacturing or storage installations will be very infrequent.

The chairman's decision is:

NO CONSTANT DISTANCE SHALL BE SPECIFIED TO PROVIDE INHABITED BUILDING PROTECTION FROM MISSILES.

The standards should, however, state that inhabited building distance is based on blast damage and some missiles may be projected beyond this distance. For small quantities where the hazard from missiles may be greater, increased distances shall be used.

8. Inhabited Building Distance for Barricaded Explosions:

The positions of the Board members are as follows:

Army:	0 - 100,000 pounds	f 40
	100,000 - 250,000 pounds	A gradually increasing factor from 40 to 50
	Above 250,000 pounds	f 70

Air Force: Accepts the Army's proposal.

Navy:	0 - 250,000 pounds	f 40
	Above 250,000 pounds	f 50

The area of disagreement is from 100,000 to 500,000 pounds.

All of the above proposals provide a greater degree of protection than the ATD for barricaded explosions and there is no suggestion by any Service that lesser protection than that provided by the ATD be adopted, as was the case

(REPRODUCTION #1)

THIS PAGE IS BEST QUALITY PRACTICABLE
FROM COPY FURNISHED TO DDC

with the unbarricaded proposals. There is some reason to believe that in the range of the larger quantities, as the quantity is increased, the effectiveness of a barricade for reducing blast pressure and damage therefrom is markedly reduced. The Army proposal as agreed to by the Air Force generally reflects this principal. Part of this proposal is supported by factual data and the remainder represents the nearest approach to a compromise agreement that can be obtained, therefore, the chairman's decision is in agreement with the Army and the Air Force and is:

INHABITED BUILDING DISTANCE PROTECTION FOR BARRICADED EXPLOSIVE CONCENTRATIONS SHALL BE AS FOLLOWS:

0 - 100,000 pounds	f 40
100,000 - 250,000 pounds	A gradually increasing factor from 40 to 50
Above 250,000 pounds	f 70

9. Use of Reduced Inhabited Building Distance for Buildings Located on Military Installations:

The positions of the Board members are as follows:

Army: The same general protection afforded inhabited buildings outside of the installation should be furnished inhabited buildings on the inside.

Navy: Favors the use of reduced distances for inside inhabited buildings.

Air Force: Same as Navy.

It must be conceded that, if all other conditions are equal, the structural strength and orientation of a building should determine its ability to resist damage by blast, and for some buildings lesser safety distances could be used than for others. For buildings of equal structural strength located the same distance from an explosion and oriented in the same manner from the explosion site, the hazard will be the same regardless of who owns the real estate on which the buildings are located. Considerable difficulty has been experienced in the past in determining if a building is strong enough structurally to qualify for reduced inhabited building distance and tendency has been to apply the reduced distance across the board. It is believed that personnel in inhabited buildings on a military installation should receive the same degree of protection as personnel within inhabited buildings off the installation. The chairman's decision is:

A REDUCED INHABITED BUILDING DISTANCE SHALL NOT BE USED TO PROVIDE PROTECTION FOR INHABITED BUILDINGS LOCATED ON MILITARY RESERVATIONS.

It is not believed that this Board should specify, as it has in the past, that inhabited building distances shall be used as the intraline separation distance or as the separation distance to be used between all unrelated

(REPRODUCTION #1)

THIS PAGE IS BEST QUALITY PRACTICABLE
FROM COPY FURNISHED TO DDC

activities. Many factors must be considered before a decision can be made as to the degree of protection which should be afforded such activities and only the using Service is in a position to do this. It is strongly recommended that the Board confine its interest in these separation distances to that of assessing the risks involved in an advising capacity.

10. It is recognized that the adoption of a set of uniform standards based on the foregoing decisions by the Chairman will result in many discrepancies between the quantity-distance relationships required by the uniform standards and the quantity-distance relationships existing at some Service installations. It is emphasized that this situation would prevail in one or more of the Services regardless of which of the various Service proposals for uniform standards were adopted. If the uniform standards based on the Chairman's decisions are adopted, the following policies pertaining to application of the new standards are recommended:

a. The new standards not be used as justification for the Services to request funds for land acquisition or for construction of new facilities or barricades in order to bring their existing installations into conformance with the new standards.

b. The new standards be made applicable to all future construction for which planning is started after promulgation of the new standards.

c. At the time of promulgation of the new standards, reasonable efforts be made at existing installations to meet the minimum requirements of the new standards by long-term restorage and by limiting quantities of explosives handled to the minimum consistent with operational requirements. After such efforts have been made, conditions remaining which were in conformance with the old standards but not with the new would be accepted.

d. The present policy whereby controlling authorities may, for strategic or other impelling reasons, approve lesser distances than those specified in the standards, be continued.

11. In accordance with paragraph III.B.4 of the Board's Charter, any member may initiate an appeal from the above decisions, through the Assistant Secretary of the Army (Manpower & Reserve Forces) to the Assistant Secretary of Defense (Supply & Logistics) for review and final decision. In the interest of expediting completion and final adoption of uniform quantity-distance standards for mass detonating explosives, it is requested that any such appeals be forwarded to the Assistant Secretary of the Army (M&RF) not later than 24 October 1955.

Ronald B. Currens
RONALD B. CURRENS
Colonel, CC, USA
Chairman

(REPRODUCTION #1)

THIS PAGE IS BEST QUALITY PRACTICABLE
FROM COPY FURNISHED TO DDC

Quantity-Distances Based on Chairman's Decision of 11 October 1955

Net Pounds of Explosives		Inhabited Buildings	
Over	Not Over	Under (feet)	Bar (feet)
	50	300	150
50	100	380	190
100	200	470	235
200	300	540	270
300	400	590	295
400	500	640	320
500	600	680	340
600	700	710	355
700	800	750	375
800	900	780	390
900	1,000	800	400
1,000	1,500	920	460
1,500	2,000	1010	505
2,000	3,000	1160	580
3,000	4,000	1270	635
4,000	5,000	1370	685
5,000	6,000	1460	730
6,000	7,000	1540	770
7,000	8,000	1600	800
8,000	9,000	1670	835
9,000	10,000	1730	865
10,000	15,000	1780	990
15,000	20,000	1950	1090
20,000	25,000	2110	1170
25,000	30,000	2260	1245
30,000	35,000	2410	1310
35,000	40,000	2550	1370
40,000	45,000	2680	1425
45,000	50,000	2800	1470
50,000	55,000	2920	1520
55,000	60,000	3030	1570
60,000	65,000	3130	1610
65,000	70,000	3220	1650
70,000	75,000	3310	1690
75,000	80,000	3390	1725
80,000	85,000	3460	1760
85,000	90,000	3520	1790
90,000	95,000	3580	1825
95,000	100,000	3630	1855
100,000	125,000	3870	2115
125,000	150,000	3800	2350
150,000	175,000	3930	2565
175,000	200,000	4060	2770

(REPRODUCTION #1)

THIS PAGE IS BEST QUALITY PRACTICABLE
FROM COPY FURNISHED TO DDC

Quantity-Distances Based on Chairman's Decision of 11 October 1955 (Continued)

Net Pounds of Explosives		Inhabited Buildings	
Over	Not Over	Under (feet)	Over (feet)
200,000	225,000	4190	2965
225,000	250,000	4310	3150
250,000	275,000	4430	4430
275,000	300,000	4550	4550
300,000	325,000	4670	4670
325,000	350,000	4780	4780
350,000	375,000	4890	4890
375,000	400,000	5000	5000
400,000	425,000	5110	5110
425,000	450,000	5210	5210
450,000	475,000	5310	5310
475,000	500,000	5410	5410

(REPRODUCTION #1)

THIS PAGE IS BEST QUALITY PRACTICABLE
FROM COPY FURNISHED TO DDC

ARMED SERVICES EXPLOSIVES SAFETY BOARD
Washington 25, D. C.

12 December 1955

MEMORANDUM FOR THE RECORD

SUBJECT: Memorandum to Board Members dated 11 October 1955, Subject: Decisions of the Chairman on Matters in Which Board Members Are Not in Unanimous Agreement with Reference to Inhabited Building Quantity-Distance Tables for Mass-Detonating Explosives

1. Since writing subject memorandum, it has become apparent that certain explanatory statements therein and my decisions at the end of paragraphs 6 and 9 require clarification. These are clarified in the following paragraphs and are cross referenced to paragraphs of subject memorandum.

2. Paragraph 1 - Last two sentences - "The barricaded distance is represented approximately by the formula $D=35W^{1/3}$ in which D is the distance in feet and W is the weight of explosives in pounds. Hereinafter when a numerical factor is used, it is the numerical factor of this formula. Doubling the barricaded ATD distance results in a factor of 70 (approximate) for unbarricaded explosives." It has been common practice at Board meetings for members to refer to the ATD barricaded distances as a factor of 35 and to the ATD unbarricaded distances as a factor of 70. Actually the unbarricaded factor in the 1910 version of the ATD varies from 39.6 to 102. The calculated average, obtained by weighting the average factor for each interval group by its percentage quantity range vs total range (500,000 lbs.) is 70.5. The ATD as revised 30 January 1953 uses a constant unbarricaded factor of 80 for quantities up to 10,000 lbs. For quantities from 10,000 to 300,000 lbs., distances are the same as the table developed in 1910. The unbarricaded factor for the revised ATD varies from 68.0 to 80.5. When extended to 500,000 lbs. the average "calculated" as above is 70.4. The word "approximate" was used in my 11 October 1955 memorandum in order to avoid including all of this detail.

3. Paragraph 6 - my decision at the end of paragraph 6 "The American Table of Distances Shall be Used to Provide Inhabited Building Protection for Unbarricaded Explosive Concentrations." My intent was that the unbarricaded ATD as revised 30 January 1953 and extended to 500,000 lbs. be used. Tables reflecting these distances "Quantity-Distances Based on Chairman's Decision of 11 October 1955" were provided Board members at the 149th Board meeting, 24 October 1955. The factors over the range of this table are as follows:

a. 0 to 1,000 lbs. - factor of 80.

b. 1001 to 10,000 lbs. - factor of [illegible]

c. 10,001 to 100,000 lbs. - factors vary from 71.7 to 78.7. Average for this portion is 76.1.

(REPRODUCTION #2)
(Vol. 9, pp. 3190 and 3191)

THIS PAGE IS BEST QUALITY PRACTICABLE
FROM COPY FURNISHED TO DDC

d. 100,001 to 200,000 lbs. - factors vary from 69.4 to 73.4. Average for this portion is 71.2.

e. 200,001 to 300,000 lbs. - factors vary from 68.0 to 68.8. Average for this portion is 68.4.

f. 300,001 to 400,000 lbs. - factors vary from 67.8 to 67.9. Average for this portion is 67.8.

g. 400,001 to 500,000 lbs. - factors vary from 68 to 68.1. Average for this portion is 68.1.

h. As stated in paragraph 2 above, the overall average when equal weight is given to each portion of the table is 70.4.

4. Paragraph 8 - my decision at end of paragraph "Inhabited Building Distance Protection for Barricaded Explosive Concentrations Shall be as Follows:

0 - 100,000 pounds	f 40
100,000 - 250,000 pounds	A gradually increasing factor from 40 to 50
Above 250,000 pounds	f 70"

My intent was that the unbarricaded ATD (as revised 30 January 1953 and extended to 500,000 lbs.) be used for quantities of explosives from 250,000 lbs. to 500,000 lbs. This results in no credit being given for barricades for quantities of explosives greater than 250,000 lbs. and was reflected in the tables provided at the 149th Board meeting and referred to in the preceding paragraph. In arriving at my decision for the 250,000 to 500,000 lb. portion of the table, I accepted the Army's recommendation, since the Navy and Air Force representatives had previously stated at the 147th and 148th Board meetings that neither of these Services contemplated storing barricaded quantities greater than 250,000 lbs. The Army has been storing quantities of from 250,000 to 500,000 lbs. in igloo magazines for several years using the above unbarricaded distances. From the standpoint of protection provided, data from the Arco tests conducted in 1945 and 1946 and the accidental explosion at Savanna Ordnance Depot in 1948 indicate that these distances provide a high degree of protection from explosives stored in igloo magazines. It is possible that a lesser distance could be used for this type of storage and still provide adequate protection, however, at the present time there is not sufficient structural damage data available to determine this lesser distance. In view of the above, I considered it logical to accept the Army's proposal.

Ronald B. Curreens

RONALD B. CURRENS
Colonel, OC, USA
Chairman

(REPRODUCTION #2)

THIS PAGE IS BEST QUALITY PRACTICABLE
FROM COPY FURNISHED TO DDC

HEADQUARTERS
UNITED STATES ARMY MATERIEL COMMAND
WASHINGTON, D.C. 20315

10 August 1965

SUBJECT: Proposed Revision to Section IV, Inclosure 1, DOD Directive 4145.17

TO: Chairman
Armed Services Explosives Safety Board
Department of Defense
Washington, D. C. 20315

1. As requested in the ASESB meeting of 27 July 1965, the following information is furnished with regard to the Army member's recommendations for additions to the proposed subject revision, furnished in letter, subject as above, dated 6 July 1965:

a. The basic precept of explosives safety is to limit the exposure of a minimum number of personnel, for a minimum time, to a minimum amount of hazardous material. Another important consideration is the reduction of potential for loss of facilities and materiel. These are the principal reasons for establishing explosives storage areas and separating these areas from explosives operating lines (as well as unrelated exposures) by inhabited building distances. Individual explosives operating lines are separated from each for the same reasons. This required separation provides a high degree of protection for personnel and facilities. The inhabited building distance for mass-detonating ammunition and explosives (Class 7 and other ammunition stored as Class 7) is based on damage from blast effects; however, it does provide a high degree of protection from missiles except for small quantities where the missile hazard may be more severe than the blast hazard. Inhabited building distances for ammunition and explosives which are not mass-detonating are based on the most severe hazard involved.

b. To obtain the maximum safety consistent with efficient operations, the limited storage required for direct support of explosives operating lines is placed in services magazines that are separated from operating buildings

(REPRODUCTION #3)
(Vol. 21, pp. 8043a and 8043b)

THIS PAGE IS BEST QUALITY PRACTICABLE
FROM COPY FURNISHED TO DDC

by intraline distances. In the same manner, facilities and operations that are in direct support of a magazine area are separated from the magazines by intraline distances. Such facilities include surveillance buildings, packing and shipping buildings, guard shelters and field offices. The reduced protection provided by intraline distance is considered appropriate when operations are in direct support of the magazine area. Intraline distance is expected to protect buildings from propagation of explosion due to blast effects but not against possibility of propagation due to missiles. Buildings separated by intraline distances will probably suffer substantial structural damage.

c. The recommended additions to the proposed change reflect the above policy. Acceptance of intraline distances must be based upon a bonafide operational necessity and must not include unacceptable risks to unrelated personnel, to conventional munitions, and particularly to nuclear weapons. The intraline exposure of nuclear weapons in aboveground locations to the hazards of conventional ammunition is normally considered an unacceptable risk by the Army. A high explosive detonation of a nuclear weapon would result in radiation safety problems, loss of high value, strategically important munitions, unfavorable public reaction and possible world-wide political actions having adverse effect upon DOD operations.

2. The recommended changes are considered to be the best safety policy for DOD. In the few exceptions (considered justifiable and acceptable) existing procedures permit waiver action by the Service concerned. In the event of an accident involving ammunition or explosives, where a too lenient general policy for separation of nondirectly-related activities has been established, the DOD could be severely criticized by outside agencies for not preventing immoderate spread of injuries and damages.

LEIGH W. WORTHING
Colonel, GS
Army Member, ASESB

Copy Furnished:
Navy Member, ASESB
Air Force Member, ASESB

(REPRODUCTION #3)

THIS PAGE IS BEST QUALITY PRACTICABLE
FROM COPY FURNISHED TO DDC

In reply refer to
ASESB-937-65/3

7 September 1965

MEMORANDUM FOR: COLONEL L. W. WORTHING, USA, MEMBER, ASESB
CAPTAIN L. R. OLSEN, USN, MEMBER, ASESB
COLONEL SAM GOLDENBERG, USAF, MEMBER, ASESB

SUBJECT: Proper Application of Paragraph V B DoD Directive 4145.17, (Incl 1) December 7, 1956

1. Problem: How to determine when the fragment hazard becomes greater than the blast hazard in applying provisions of subject paragraph.

2. Discussion:

a. The Directive states that "These distances, which are based on damage from blast effects, also provide a high degree of protection from missiles except for small quantities where the missile hazard is more severe than the blast hazard. For these small quantities, when the item to be stored or handled are such that the missile hazard is more severe than the blast hazard, increased distances as shown by experience or tests to be commensurate with the actual missile hazard, shall be used.

b. The term small quantities is an ambiguous term and can be interpreted by different persons for different amounts. To determine for any given quantity the point at which the missile hazard becomes greater than blast hazard is influenced by many factors, such as:

(1) The physical characteristics of the item or items.

(2) The environment in which the item is located.

(3) The number of items concentrated in the location under consideration.

(4) Acceptable fragment risk-factor density.

c. In applying the provisions of paragraph V the person or persons of the Board Secretariat are placed in a position of either ignoring this provision, or in the absence of valid test or experience data, making a judgment determination.

COPY

(REPRODUCTION #4)
(Vol. 21, pp. 8044 and 8045)

THIS PAGE IS BEST QUALITY PRACTICABLE
FROM COPY FURNISHED TO DDC

3. Possible Approaches for Resolution of Problem:

a. Selection of a cut-off point at which a constant distance would be used for all quantities of explosives below that point.

b. Selection of different cut-off points for different quantities of explosives. The Fragmentation Work Group at one time recommended the following:

Explosives Weight	Distance
0 - 50	Confine fragments or provide local protection
50 - 200	800 Feet
200 - 5000	1200 Feet
5000 - 15,000	1800 Feet

c. The selection of a fragment risk-factor density.

d. If the Military Departments have valid test data which shows that the fragment risk-factor density can be satisfied at a distance less than the cut-off point, that distance would be acceptable.

e. Any tests which the Board considers advisable could possibly be incorporated into present test programs of the Board or a new test program initiated.

/s/
R. E. JOHNSON
Captain, USN
Chairman

Copy furnished:
Army Alt Mbr
Navy Alt Mbr
AF Alt Mbr

(REPRODUCTION #4)

THIS PAGE IS BEST QUALITY PRACTICABLE
FROM COPY FURNISHED TO DDC

In reply refer to
ASESB-300-66/1

22 March 1966

From: Chairman, Armed Services Explosives Safety Board
To: Commander, US Naval Weapons Laboratory, Dahlgren, Va.

Subj: Development of Safety Criteria Applicable to Fragment Producing Explosives

Ref: (a) DoD Directive 4145.17, "Quantity-Distance Standards for Manufacturing, Handling, and Storage of Mass-Detonating Explosives and Ammunition," dated December 7, 1956; or new DoD Instruction 4145.23, same subject, dated March 11, 1966

1. The Armed Services Explosives Safety Board has directed its Chairman to develop, if possible, improved technical criteria to govern the safety separation of various kinds of exposed targets from accidental detonation of explosives in combination with fragment producing material. The situation which led to this direction is briefly outlined in succeeding paragraphs. The NWL Dahlgren, Va. is requested to consider the technical problems presented and advise if in-house capability exists to analyze the problem and determine if the development of technical criteria for the use of the Services is practical and feasible. Providing a technical solution appears possible, the ASESB intends to arrange the necessary financial support to develop the criteria.

2. The American Table of Distances and the various derivations and refining standards in use, reference (a) as an example, are serving their purpose well as far as setting forth distances which afford a described degree of protection from the blast effects of the accidental explosion of a specified amount of material. The mechanics of fragment dispersal and flight are such that these same distances afford equal or superior protection from any fragments involved in the incident except in some situations when fairly small quantities of explosives and corresponding shorter distances are involved. Historically, several attempts have been made to define the point where fragments may be more dangerous than blast but insufficient analysis was available to achieve agreement.

3. Such investigation and inquiry as has been accomplished by the Secretariat ASESB has been inconclusive in all respects except that better guidance is sorely needed. However, the following observations have been made and discussed with a cross section of explosives safety engineers without bringing disagreement.

1 dl suspense

Identical letter sent to: Comdr, BRLabs, Aberdeen Proving Ground, Md.

(REPRODUCTION #5)
(Vol. 22, pp. 8407-8409, inc.)

THIS PAGE IS BEST QUALITY PRACTICABLE
FROM COPY FURNISHED TO DDC

a. There is no agreement as to what constitutes an unacceptable degree of personnel casualty or damage to structures and material such as density of fragments per unit area or other such criterion.

b. There is no agreement whether the personal exposure risk should be defined as the risk of one person in the open, a certain population of people in the open for a given area, or any of other numerous variations.

c. Sufficient incidents have been thoroughly documented to furnish investigators adequate material to determine if a type of valid standard is possible of development. It is not believed that sufficient well recorded incidents are available to give firm refined values for a complete scheme of standards.

4. There is a definite need for some definitive criteria for protection against fragment hazards in DoD activities. No one can say for certain that the judgment system used at present is buying too much protection or affording too little, but probably a substantial number of both situations exist. This is not a new problem at all, but the number of instances wherein better guidance is needed are steadily increasing. This increase is a by-product of weapon development; from huge and bulky explosive concentrations to smaller amounts in more sophisticated configurations and requiring specialized storage. No price tag can be put on the instances of misapplication of protective measures because of lack of adequate knowledge, but it obviously runs in the millions of dollars per annum. One Service is at present planning to conduct a very expensive test to check the best available judgment of explosives safety engineers. It is likely that this test would not be necessary, or that its scope and cost could be greatly reduced, if an adequate knowledge existed of the effects of fragments resultant from explosive accidents under relatable conditions, i.e., weight of explosives, environment, etc.

5. As mentioned before, practicing explosives safety engineering personnel have considered the fragment damage standardization problem at length but without conclusion. It is obvious that failure to develop a common definition or understanding of what degree of casualty is unacceptable contributed to this inconclusive effort. It is also likely that too obdurate a position was taken in the number of parameters which could vary and still permit a somewhat universal system similar to that applicable for blast damage. Here, essentially, the working rules recognize only separation distance and weight of explosive involved. In this case no harm has come from disregarding the environment around the explosive, the varying power generated by different explosives and other variables.

6. It appears that a concerted assault by scientifically oriented minds skilled in several disciplines holds the best promise for a helpful

(REPRODUCTION #5)

THIS PAGE IS BEST QUALITY PRACTICABLE
FROM COPY FURNISHED TO DDC

solution. The least that such effort would accomplish would be to collate the existing recorded experience in a form that would make it more useful in deriving individual judgment. The ASESB feels that the same minds and disciplines used in judging the lethality or damage potential of a weapon producing fragments are best qualified to produce a criteria defining the non-lethality or acceptable damage level of a potential incident which could produce fragments either from weapons or their environment.

7. Your earnest consideration of the matter presented herein is solicited. A start toward a solution is considered highly desirable, and there are so many situations needing improvement, that benefits comparable to a significant new development are possible. Members of the ASESB Secretariat have devoted much practical attention to this problem and have amassed a substantial amount of historic material. Their services and this material are freely available to assist in your consideration.

R. E. JOHNSON

Copy furnished:
Board Members

(REPRODUCTION #5)

DEPARTMENT OF DEFENSE
ARMED SERVICES EXPLOSIVES SAFETY BOARD
WASHINGTON, D.C. 20315

IN REPLY REFER TO
SAESB-T

11 June 1970

MEMORANDUM FOR THE ARMED SERVICES EXPLOSIVES SAFETY BOARD

SUBJECT: Meeting #258 of the ASESB

1. Reference:

a. ASESB memorandum dated 5 May 1970 same subject as above.

b. Agenda item 2b "Anomalies With Respect to Interim Quantity-Distance Standards."

2. Agenda item 2b recommended revised tables to be included in an interim change to DOD Manual 4145.27M in lieu of Change 1-3 which has since been rescinded. The Office of the Assistant Secretary of Defense (I&L) has called attention to a number of anomalies in the existing regulations and suggested that a formal change to the manual be published eliminating these anomalies. Inclosure 1 is recommended as a substitution for reference 1b.

William Cameron III

Incl
as

WILLIAM CAMERON III
Colonel, USAF
Chairman

(REPRODUCTION #6)
(Vol. 29, pp. 11894-11906, inc.)

AGENDA ITEM 2b. RECOMMENDED QUANTITY-DISTANCE STANDARDS FOR MASS DETONATING AMMUNITION AND EXPLOSIVES

1. It is proposed that the present quantity-distance tables in DOD Manual 4145.27M dealing with distances to inhabited buildings, passenger railroads, public highways, and joint DOD-non DOD airfield facilities be deleted and replaced by two new tables, copies attached.

2. This will result in the following substantial changes in quantity-distance regulations. A rationale for each change is:

a. Two fixed distances are provided for all amounts of explosive up to 30,000 lbs. of high explosive for the targets enumerated. The distance of 1245 ft. is required to protect against fragments and debris from most explosions but can reasonably be reduced for vehicular targets because of their reduced vulnerability. Recently received results of contract studies directed by the Board on fragmentation hazards show that the fragment hazard from typical example weapons may be quite significant out to 1245 ft. This distance relationship is relatively insensitive either to barricading or the probability of a fragment strike. Charts illustrating this are attached, exhibits 1, 2, and 3.

b. Elimination of credit for barricades. The very considerable amount of work done in the past several years to evaluate the effectiveness of barricades has conclusively shown that for distant targets, i.e., at or near inhabited building distances, barricades are of relatively little value for protection against either blast overpressure or fragments.

c. The results of a blast vulnerability analysis study recently conducted for the Board demonstrate that the tables shown provide an

(REPRODUCTION #6)

adequate degree of safety against blast overpressure for nine of a group of ten example targets considered. The one target studied which is significantly endangered by blast pressures expected at the distances provided in this table would require a protection distance approximately double those listed for large yield events. It is a target type occurring infrequently enough so that this degree of protection is not considered practical from an economic standpoint.

d. The change suggested removes the marked anomalies presently existing in the quantity-distance standards in that explosives on board vessels may be positioned at a risk factor of $50W^{1/3}$ but quantities in other situations above 250,000 lbs. net high explosive require a risk factor of nearly $70W^{1/3}$. There is no scientific basis for this difference. Effects from large yield explosions (above one million pounds) will be examined in more detail to further analyze the need for a risk factor based upon both pressure and impulse, not on peak pressure alone.

3. In order to accommodate the need for a standard for separation of small quantities of explosives from targets involving exposure of the general public, a supplementary table is attached without the minimum single distance specified for all quantities up to 30,000 lbs. Use of this table is contemplated only for those potential explosion sources wherein positive control is assured so there will be no projection of fragments of the ammunition, or debris from damage to the source buildings or other structures nearby. For this purpose, conventional barricading as defined in the present standards will not be considered adequate control of fragments.

(REPRODUCTION #6)

4. The distances contained in column (3) were computed on the following factors:

Explosive Wt. Lbs.	Distance or Factors
0 to 30,000	$40W^{1/3}$ with control of fragments 1245 ft. without control of fragments
30,000 to 100,000	$40W^{1/3}$
100,000 to 250,000	$40W^{1/3}$ increasing to $50W^{1/3}$
250,000 to 15,000,000	$50W^{1/3}$

(REPRODUCTION #6)

TABLE 5-6.5--Class 7: Mass Detonating Explosives
Exterior Quantity-Distances

Net Pounds of Explosives		Distance in Feet From Explosive Hazard	
Over	Not Over	To Inhabited Buildings & Runways, Taxiways and Aircraft Parking Areas for Joint DOD-Non DOD Use	To Passenger Railroads & Public Highways
(1)	(2)	(3)	(4)
0	1	1,245	745
1	2	↑	↑
2	5		
5	10		
10	20		
20	30		
30	40		
40	50		
50	100		
100	200		
200	300		
300	400		
400	500		
500	600		
600	700		
700	800		
800	900		
900	1,000		
1,000	1,500		
1,500	2,000		
2,000	3,000		
3,000	4,000		
4,000	5,000		
5,000	6,000		
6,000	7,000		
7,000	8,000		
8,000	9,000		
9,000	10,000		
10,000	15,000		
15,000	20,000		
20,000	25,000	↓	↓
25,000	30,000	1,245	745
30,000	35,000	1,310	785
35,000	40,000	1,370	820
40,000	45,000	1,425	855
45,000	50,000	1,470	880
50,000	55,000	1,520	910
55,000	60,000	1,570	940
60,000	65,000	1,610	965

(REPRODUCTION #6)

TABLE 5-6.5--Class 7: Mass Detonating Explosives
Exterior Quantity-Distances

Net Pounds of Explosives		Distance in Feet From Explosive Hazard	
Over	Not Over	To Inhabited Buildings & Runways, Taxiways and Aircraft Parking Areas for Joint DOD-Non DOD Use	To Passenger Railroads & Public Highway
(1)	(2)	(3)	(4)
65,000	70,000	1,650	990
70,000	75,000	1,690	1,015
75,000	80,000	1,725	1,035
80,000	85,000	1,760	1,055
85,000	90,000	1,790	1,075
90,000	95,000	1,825	1,095
95,000	100,000	1,855	1,115
100,000	125,000	2,115	1,270
125,000	150,000	2,350	1,410
150,000	175,000	2,565	1,540
175,000	200,000	2,770	1,660
200,000	225,000	2,965	1,780
225,000	250,000	3,150	1,890
250,000	275,000	3,250	1,950
275,000	300,000	3,345	2,005
300,000	325,000	3,440	2,065
325,000	350,000	3,525	2,115
350,000	375,000	3,605	2,165
375,000	400,000	3,685	2,210
400,000	425,000	3,760	2,250
425,000	450,000	3,830	2,300
450,000	475,000	3,900	2,340
475,000	500,000	3,970	2,380
Million Net Pounds of Explosives			
.50	.60	4,215	2,530
.60	.70	4,440	2,665
.70	.80	4,640	2,785
.80	.90	4,825	2,895
.90	1.00	5,000	3,000
1.00	1.25	5,385	3,230
1.25	1.50	5,725	3,435
1.50	1.75	6,025	3,620
1.75	2.00	6,300	3,780
2.00	2.25	6,550	3,930
2.25	2.50	6,785	4,070
2.50	2.75	7,005	4,205

(REPRODUCTION #6)

TABLE 5-6.5--Class 7: Mass Detonating Explosives
Exterior Quantity-Distances

Million Net Pounds of Explosives		Distance in Feet From Explosive Hazard	
Over	Not Over	To Inhabited Buildings & Runways, Taxiways and Aircraft Parking Areas for Joint DOD-Non DOD Use	To Passenger Railroads & Public Highways
(1)	(2)	(3)	(4)
2.75	3.00	7,210	4,325
3.00	3.25	7,405	4,445
3.25	3.50	7,590	4,555
3.50	3.75	7,770	4,660
3.75	4.00	7,935	4,760
4.00	4.25	8,100	4,860
4.25	4.50	8,255	4,955
4.50	4.75	8,410	5,045
4.75	5.0	8,550	5,130
5.0	5.5	8,825	5,295
5.5	6.0	9,085	5,450
6.0	6.5	9,330	5,600
6.5	7.0	9,565	5,740
7.0	7.5	9,785	5,870
7.5	8.0	10,000	6,000
8.0	8.5	10,205	6,125
8.5	9.0	10,400	6,240
9.0	9.5	10,590	6,355
9.5	10.0	10,770	6,465
10.0	11.0	11,120	6,670
11.0	12.0	11,445	6,870
12.0	13.0	11,755	7,055
13.0	14.0	12,050	7,230
14.0	15.0	12,330	7,400

(REPRODUCTION #6)

TABLE 5-6.5a--Class 7: Mass Detonating Explosives
Exterior Quantity-Distances for Sources Controlling Fragment Hazards

Net Pounds of Explosives		Distance in Feet From Explosive Hazard	
Over	Not Over	To Inhabited Buildings & Runways, Taxiways and Aircraft Parking Areas for Joint DOD-Non DOD Use	To Passenger Railroads & Public Highways
(1)	(2)	(3)	(4)
0	1	40	25
1	2	50	30
2	5	70	40
5	10	90	55
10	20	110	65
20	30	125	75
30	40	140	85
40	50	150	90
50	100	190	115
100	200	235	140
200	300	270	160
300	400	295	175
400	500	320	190
500	600	340	205
600	700	355	215
700	800	375	225
800	900	390	235
900	1,000	400	240
1,000	1,500	460	275
1,500	2,000	505	305
2,000	3,000	580	350
3,000	4,000	635	380
4,000	5,000	685	410
5,000	6,000	730	440
6,000	7,000	770	460
7,000	8,000	800	480
8,000	9,000	835	500
9,000	10,000	865	520
10,000	15,000	990	595
15,000	20,000	1,090	655
20,000	25,000	1,170	700

This table may only be used for separation from potential explosion sources wherein positive control is assured so that there will be no projection of fragments of the ammunition or debris from destroyed buildings. For this purpose, conventional barricading or use of standard igloos will not be considered adequate control of fragments.

(REPRODUCTION #6)

DISTANCES CORRESPONDING TO DAMAGE PROBABILITY 0.001 FOR FRAME BUILDING

Donor	Total Wt (lbs)	Wt Casing (lb)	HE (lb)	Fragment Damage Probability for Frame Bldgs 0.001	0.01	0.1	Fragment Damage Probability for Parked Aircraft 0.001	0.01	0.1
(1) 500 lb bomb, Mark 82, mod 1	531.0	339.0	192.0	1,220	1,200	1,170	1,220	1,210	1,200
(2) 750 lb GP bomb, M117A2	823.0	437.0	386.0	1,290	1,280	1,270	1,290	1,270	1,150
(3) 5"/38 Projectile, Mark 49, mod 0 (VT)	54.6	47.8	7.9	950	940	920	-	-	-
(4) 8"/55 Projectile Mark 25, mod 1, (HC)	258.8	237.5	21.3	850	820	790	1,010	-	-
(5) 105mm Howitzer, M107	33.2	28.4	4.8	1,270	1,205	-	1,190	-	-
(6) 155mm Howitzer, M107	95.0	80.0	15.0	1,290	1,270	1,190	1,210	1,200	-
(7) 175mm Shell, M437A2				1,990	1,720	1,505	1,810	1,630	-

THE REQUIRED DISTANCE APPEARS TO BE RELATIVELY INSENSITIVE TO PROBABILITY VARIATIONS - THAT IS, A RELATIVELY NARROW BAND ENCOMPASSES ALL THE PROBABILITIES CONSIDERED FOR THESE SEVEN TYPICAL AMMUNITION ITEMS.

(REPRODUCTION #6)

BARRICADED DISTANCES CORRESPONDING TO FRAGMENT DAMAGE PROBABILITIES, 0.1, 0.01, 0.001 FOR FRAME BUILDINGS AND PARKED AIRCRAFT

Target	Donor	Scaled Barricade Height, H = 1.0			Scaled Barricade Height, H = 0.5		
		Fragment damage probability			Fragment damage probability		
		0.001	0.01	0.1	0.001	0.01	0.1
Frame Building	750 lb GP bomb M117A2	1,230 (1,290)	1,220 (1,280)	1,130 (1,270)	1,270 (1,290)	1,250 (1,280)	1,190 (1,270)
	105mm Howitzer M107	1,210 (1,270)	1,060 (1,205)	- -	1,250 (1,270)	1,190 (1,209)	670 -
Parked Aircraft	750 lb GP bomb, M117A2	1,250 (1,290)	1,205 (1,270)	1,010 (1,150)	1,270 (1,290)	1,205 (1,276)	1,140 (1,150)
	105mm Howitzer, M107	1,150 (1,190)	-	-	1,210 (2) (1,190)	-	-

(1) Unbarricaded distances are shown in parenthesis below the barricaded values
(2) Barricaded distances which are greater than unbarricaded distances are in error due to data smoothing preceding the numerical plotting.
(3) THE LEVEL OF THE FRAGMENT DAMAGE PROBABILITY DOES NOT APPEAR TO APPRECIABLY AFFECT THE DISTANCES ASSOCIATED WITH THE RANGE OF PROBABILITIES 0.001 TO 0.1.
(4) THE RATIO OF BARRICADED DISTANCE TO UNBARRICADED DISTANCE VARIES FROM .88 TO .99 AS COMPARED TO 0.5 FOR THE LOWER EXPLOSIVE WEIGHTS IN TABLE 5-6.5 OF THE MANUAL.

(REPRODUCTION #6)

ELEVATION OF TYPICAL MODULE (AFM 127-100)

STACKED BOMBS 6 FEET HIGH

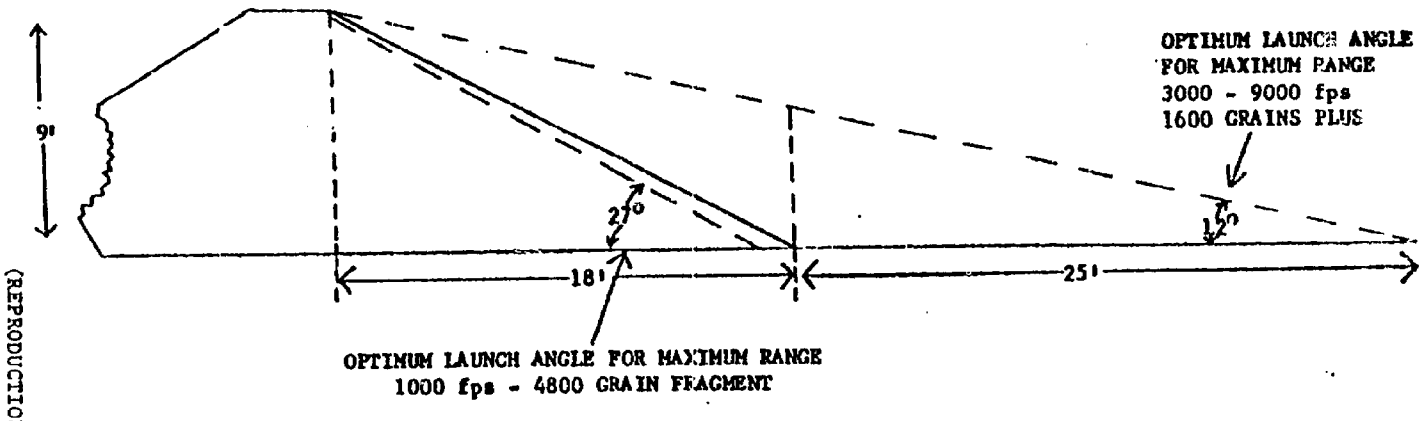

(REPRODUCTION #6)

AGENDA ITEM 2b. ANOMALIES WITH RESPECT TO THE INTERIM QUANTITY-DISTANCE STANDARDS

1. The Board approved the following inhabited building distances for mass detonating explosives (255th meeting):

Explosive Wt. Lbs.	Distance or Factors
0 to 10,000	$40W^{1/3}$ - barricaded 865 ft. - minimum unbarricaded distance
10,000 to 100,000	$40W^{1/3}$ - barricaded or unbarricaded
100,000 to 250,000	$40W^{1/3}$ - increasing to $50W^{1/3}$ - barricaded or unbarricaded
250,000 to 500,000	$50W^{1/3}$ - barricaded or unbarricaded

Attached as Incl. 1 is the draft of Interim Change 1-3 which contains the above quantity-distance relationships.

2. Anomalies created by above change:

a. Approval covers only 0 - 500,000 lbs. of explosives. Table 5-6.5 covers up to 5,000,000 lbs.

b. In some instances the passenger railroad and public highway distances are greater than the inhabited building distance.

c. Table 6-3.1 prescribes a minimum unbarricaded distance of 1235 ft. from 0 - 15,000 lbs. of explosives and a uniform factor of $50W^{1/3}$ from 15,000 - 500,000 lbs. for runways, taxiways, and aircraft parking areas at joint DOD/non-DOD airfields.

d. Table 7-7.2 requires ship or barge units be separated from inhabited buildings by a minimum of 1460 ft., passenger railroad, and public highway by a minimum of 875 ft. for explosives from 0 to 25,000 lbs. and by a uniform factor of $50W^{1/3}$ for inhabited buildings and $30W^{1/3}$ for passenger railroads and public highways from 25,000 to 15,000,000 lbs.

3. Recommendations:

a. To maintain uniformity, all tables for mass detonating explosives should be changed to reflect the Board's decision.

(REPRODUCTION #6)

THIS PAGE IS BEST QUALITY PRACTICABLE
FROM COPY FURNISHED TO DDC

b. Revised tables attached as Inclosures 2, 3, and 4 be published as an Interim Change.

c. Whenever DOD Manual 4145.27M is revised, all tables for mass detonating explosives be consolidated into one table of distances for the separation of explosives from inhabited buildings, passenger railroads and public highways.

4 Incls.

(REPRODUCTION #6)

DEPARTMENT OF THE AIR FORCE
HEADQUARTERS UNITED STATES AIR FORCE
WASHINGTON, D.C.

REPLY TO ATTN OF: DEPUTY INSPECTOR GENERAL FOR INSPECTION AND SAFETY, USAF Norton Air Force Base, California 92409 IGDSGE 10 FEB 1971

SUBJECT: Proposed Interim Change 1-5 DOD Manual 4145.27M

TO: Armed Services Explosives Safety Board

1. References:

a. Your memorandum, 21 October 1970, subject as above, to ASESB members and alternates.

b. Our letter, 13 November 1970, subject as above.

c. Our letter, 27 January 1971, Opening of Explosives Loaded Rail Cars in Classification Yards.

2. Reference 1a presented subject criteria changes and requested a service position be determined. Reference 1b provided an interim reply to reference 1a and advised that impact data essential to the determination of the Air Force position was being obtained from major commands.

3. Concur in the proposed interim change, subject to comments previously submitted by reference 1c, except that portion pertaining to the fragmentation problem. The attached study provides a review of this problem. The attachment includes a copy of our letter to selected major commands (Tab A) and a synopsis of their response revealing the order of magnitude of the impact of the proposed changes upon the Air Force (Tab B).

4. Concur in the conclusions and recommended actions set forth in the attached study. Request reconsideration of subject proposed change be included in the agenda of the forthcoming meeting of the ASESB.

FOR THE CHIEF OF STAFF

JOHN L. GORMAN, Colonel, USAF
Directorate of Aerospace Safety

1 Atch
Review of Prop Changes to DOD Explo Q-D Criteria

(REPRODUCTION #7)
(Vol. 31, pp. 12,534-40 inc.)

REVIEW OF PROPOSED CHANGES TO DOD
EXPLOSIVES QUANTITY-DISTANCE (Q-D) CRITERIA

PROBLEM

1. Determine:

a. The validity of the proposed quantity-distance criteria contained in Interim Change 1-5, DOD Manual 4145.26M.

b. The order of magnitude of the impact of these criteria upon the Air Force.

c. Whether such criteria should be adopted.

FACTORS BEARING ON THE PROBLEM

2. The present quantity-distance table for mass detonating explosives (Class 7) provides more than ample protection to inhabited buildings, public highways, and public railroads from the effects of blast overpressures. All agree that protection against fragments from fragment producing munitions is presently not sufficient for these exposures until the required "blast distance" becomes greater than the range of a significant density of effective fragments.

3. The Air Force has on several occasions requested realistic fragmentation protection criteria be established for various categories of fragment producing munitions. We have recommended that such standards be based upon a number of effective fragments per square foot (yard/meter) to be determined (after considering or obtaining acceptable damage/risk parameters).

4. It has been abundantly proven that conventional barricades have no practical effect upon blast overpressures and that the present unbarricaded distances are generally too great. All agree that proposed Class 7 criteria revisions for overpressure hazards are acceptable.

5. Proposed tables do not affect existing criteria for barricaded or unbarricaded "intermagazine" (storage) or "intraline" (explosives workshop) exposures. Normal barricades are effective and necessary to obtain maximum storage

(REPRODUCTION #7)

density for munitions in a given land area. Such barricades provide protection from high speed low angle fragments at exposures located at less than those given or proposed for inhabited buildings, public highways, or public railroads.

6. Normal barricades are not effective in limiting the range of high angle fragments that travel out to inhabited building, highway, or railroad distance. The proposed elimination of distance reduction credit for barricades applying to such exposures is proper. The fragments go over the barricade. However, the use of barricades would continue to be worthwhile in many Air Force situations where the sizable numbers of people are working outside in areas between the explosives location and some "inhabited facility", e.g., personnel working on and in the vicinity of our flightlines. Barricades will eliminate high speed low angle fragments and reduce the density in the aforementioned airfield areas. (NATO criteria generally prohibits unbarricaded storage sites where fragment producing items with mass detonating characteristics are involved.)

7. It was recognized by all concerned in the 1962 period that munitions producing fragments should be divided into at least four categories according to the range of a significant density of fragments. Tables of distances for hazard Classes 3, 4, 5, and 6 resulted. These tables appear in paragraph 5-5, DOD Manual 4145.27M and inhabited building distance are 400, 800, 1200, and 1800 feet respectively. These distances may require some updating in consideration of added inventory items and fragmentation data being assembled by the ASESB. However, this approach to the fragment problem remains valid.

8. The foregoing system of graduated classes, although adopted, has never been fully exploited. Reason: The joint document, TO 11A-1-47 (TB 700-2, NAVORDINST 8020.3, DSAR 8220.1), implementing DOD Instruction 4145.24, establishes parameters and detailed procedures for determining whether an item is Class 2 (fire hazard) or Class 7 (mass detonating), but furnishes very little guidance and no standards or uniform procedures requiring an item to be placed in Class 3, 4, 5, or 6. Confirmation of the foregoing is contained in the "Report of the Minimum Test Criteria Task Group", 18 March 1970, to the Chairman, ASESB.

(REPRODUCTION #7)

THIS PAGE IS BEST QUALITY PRACTICABLE
FROM COPY FURNISHED TO DDC

In substance, it was concluded that instructions or interpreting test results to assure proper assignment of items to Classes 3 through 6 should be incorporated into the publication as soon as availability of fragmentation standards permitted. The meeting of the task group was held pursuant to ASESB (SAESB-T) letter, 25 February 1970, Minimum Test Criteria Task Group. The task group has not been convened since that date.

9. The proposed criteria revision, with respect to the fragment hazard associated with items having mass detonating characteristics, provides a fixed minimum distance of 1235 feet between all types of mass detonating items containing net explosives weights between 0 and 30,000 pounds, regardless of their fragmentation characteristics. Management of the fragment hazard presented by different items will be by exception under the proposal. Graduated reductions in distances (based upon the blast hazard) down to 40 feet for 1 pound of explosives will be permitted provided: "positive control (of fragments) is assured so that the fragment hazard at the distance specified will be no greater than a probability of .001 of unacceptable damage to the targets considered. For this purpose conventional barricading or use of standard igloos will not necessarily accomplish adequate control of fragments."

10. The exception in paragraph 9 above is without guidance and is so nebulous as to defy interpretation for purposes of issuing implementing instructions that can be used by Air Force or base commanders. Clear cut criteria and approved DOD or Air Force risk/damage guidance would need to be developed for items or groups of items and various exposure categories before commanders could obtain any significant relief from the 1235 foot fixed minimum distance. Under certain circumstances relief could be obtained by building expensive explosives facilities in accordance with design criteria provided in AFM 88-22 (TM 5-1300, NAVFAC P-397), "Structures to Resist The Effects of Accidental Explosions." However, budget restrictions will be a limiting factor.

11. The rationale (text and charts) used in formulating the proposed fragmentation criteria and the 1235 foot minimum distance (provided by the ASESB Secretariat) is contained in attachment 2, Tab A. The proposed minimum distance is based upon the following:

(REPRODUCTION #7)

THIS PAGE IS BEST QUALITY PRACTICABLE
FROM COPY FURNISHED TO DDC

a. Fragments from seven relatively heavy fragment producing items (such as the 750 pound M117 bomb). No information is available on items that could be considered very light, light, or medium fragment producers. For example: Data on the fragment hazard produced by the weapons employed on our alert aircraft (ADC, SAC, etc) is required. Many of these weapons were not designed to produce fragments and the radius of damage from an accidental explosion of the high explosives in such items may be relatively small.

b. A basic risk (damage probability) factor without official service approval. (Legal and operational considerations should be fully explored.)

c. Incomplete fragment weight/density explanations. For example, the charted data for the probability factor against aircraft is reportedly based upon a damaging fragment striking a Boeing 707 sized aircraft. The Air Force might well be willing to accept a greater risk factor than 0.001 to military aircraft, many of which present much less surface exposure to fragment attack.

12. The impact of the proposed new fragmentation/minimum distance criteria upon the Air Force will be considerable. The order of magnitude of this impact is revealed in Tab B, containing a synopsis of replies received from selected major commands in response to our letter, Tab A.

DISCUSSION

13. The magnitude of the impact upon Air Force operations and present and future facility and aircraft parking sites makes it necessary that the fragmentation criteria adopted for each munitions grouping be the minimum required to offer a reasonable degree of protection under the circumstances. This is especially important in flightline environments, ready munitions areas, and specialized storage areas where explosives weights are generally low.

14. The proposed fragment criteria is considered to be insufficiently substantiated by data across the weapon spectrum to be adopted without further detailed consideration by the ASESB into the areas mentioned in paragraphs 7 through 11 above. The eventual fragmentation solution appears at this time to lie in the direction of a graduated

(REPRODUCTION #7)

THIS PAGE IS BEST QUALITY PRACTICABLE
FROM COPY FURNISHED TO DDC

approach, based upon realistic risk and measurable weight/density factors, within the framework of the previously adopted system of fragment classes (paragraphs 7 and 8 above).

15. The "grandfather clause" contained in paragraph 1-4C, Interim Change 1-1, DOD Manual 4145.27M (Tab C) could be employed as one approach to a "solution" of our existing ASESD approved siting (of alert aircraft parking, supporting storage areas, etc) that would be in violation of the proposed standards. However, the Air Force has never employed this provision as a means of continuing an existing situation, without waiver action, upon the basis of the date of construction or first utilization. Had this been the practice there would be an unmanageable multiplicity of standards in the Air Force today. Such a situation would make inspection activities and command enforcement very difficult. Further, it would indicate Air Force acceptance of "double standards" for safety. This would be considered inconsistent by commanders and raise doubts as to the validity of all explosives criteria. Further, the record keeping required for each violation by paragraph 1-4C2, of the above cited DOD Manual would demand a greater administrative effort than our present method of using current criteria in all operations and recording waivers issued when violations are essential to operations. All concerned are aware of the current criteria and the risks accepted under this system.

CONCLUSION

16. The proposed changes in fragmentation criteria should not be adopted at this time. The remaining changes are valid and should be adopted. The impact of the proposed fragmentation criteria upon the Air Force makes complete development of all pertinent factors essential before criteria changes are instituted. The following is considered the best approach to an acceptable solution (see paragraphs 7 and 8 above):

a. Determine the fragment damage level/risk factor acceptable to the services/DOD for various key types of military and non-military exposures. Express the fragment distribution in test measurable terms, e.g., number of

(REPRODUCTION #7)

THIS PAGE IS BEST QUALITY PRACTICABLE
FROM COPY FURNISHED TO DDC

effective (designated) fragments per square foot (yard/meter).

b. Use the above factors in expressing realistic graduated fragment hazard criteria for each grouping of fragment producing munitions.

c. Revise the joint service document cited in paragraph 8 above as required to insure that:

(1) Adequate test parameters are established for each fragment class.

(2) All minimum or nonfragment producing items having mass detonating characteristics (demolition materials, very thin cased weapons, etc) are placed in Class 7 (blast hazard).

(3) All fragment producing items having mass detonation characteristics (fragmentation bombs, demolition bombs, etc) are placed in one of the existing (or revised) fragmentation classes (3, 4, 5, or 6), as required by hazard classification test results or known weapons effects data, in accordance with parameters established as a result of a and b above.

(4) Class 7 criteria is applied when distances required for blast protection exceed those established for the particular fragment class involved.

ACTION RECOMMENDED

17. Approval of the proposed Interim Change 1-5 to DOD Manual 4145.27M except for those provisions pertaining to fragmentation criteria and the establishment of the proposed fixed minimum distances.

18. Further consideration by the ASESB of the fragmentation criteria with a view toward development and adoption of a solution along the lines outlined in paragraph 16 above.

3 Atch
1. Tab A, IGDSGE Ltr, 10 Nov 70, Prop DOD Change to Explo Q-D Criteria
2. Tab B, Impact Data
3. Tab C, Extract, Interim Change 1-1, DODM 4145.27M

(REPRODUCTION #7)

THIS PAGE IS BEST QUALITY PRACTICABLE
FROM COPY FURNISHED TO DDC

DEFINITIONS

A hazardous fragment is one having an impact energy of 58 ft/lbs or greater.

An unacceptable concentration of hazardous fragments is 1 or more per 600 sq ft.

THIS PAGE IS BEST QUALITY PRACTICABLE
FROM COPY FURNISHED TO DDC

(REPRODUCTION #8)
(Vol. 31, pp. 12,541-12,545, inc.)

RATIONALE FOR 1235-foot NOMINAL MINIMUM
DISTANCE TO INHABITED TARGETS

1. Extensive study by the Board staff in the period 1945 - 1950 recommended this figure from accident data then available.

2. Recent calculations of fragment trajectories independently indicate a sharp cut-off of the fragment pattern in the vicinity of 1150 -1250 feet for several typical munitions.

3. One example, 750 lb bomb M117A2 (370 lb HE) shows 1 fragment per 1000 square feet at about 1100ft from the source. This is for a single bomb and also does not count high-velocity, low-angle fragments which might strike an upright person before reaching the limit of their normal trajectories. Hence it is not conservative in this respect from a safety standpoint.

4. Fragments from such a bomb would be hazardous to the occupants of a frame building or passenger aircraft at distances up to the recommended nominal minimum of 1235 ft.

(REPRODUCTION #8)

RATIONALE FOR 58 ft.-lbs.

1. Test measurable.

2. Has been widely used and accepted for years - in U.S., U.K., and Germany by military surgeons.*

3. Based almost exclusively upon studies of wound ballistics from actual battle casualties.

4. Defined as a fragment capable of producing a casualty.

5. As such, has proved to be reasonable.

6. This means:

   a. A 58 lb. weight dropped 1 ft.

   b. A 1 lb. weight dropped 58 ft.

   c. A 1 oz. fragment travelling 250 ft. second.

   d. A $^1/_4$ oz. fragment travelling 500 ft. second.

   e. A $^1/_{16}$ oz. fragment travelling 1000 ft. second.

7. A fragment corresponding to d. above might penetrate the skull and leave a permanent cavity of .63 cu ins in its contents.

Reference:
*"Wound Ballistics", Coates et al, Medical Department of the Army, Chapter II. UH 215 U58d 1963 C2

(REPRODUCTION #8)

RATIONALE FOR ONE FRAGMENT STRIKE PER 600 sq. ft.

An unacceptable concentration of hazardous fragments is one or more per 600 $ft.^2$ Reasons favoring the adoption of this definition are:

1. It has found acceptance in the U.K. and in NATO, and has been a part of NATO safety principles for more than ten years.

2. It corresponds to a probability of 1/450 of serious injury to one unprotected person standing in a region of this fragment concentration, to a probability of 1/225 of serious injury to one or both of two persons in such a region, and so on.

3. It corresponds to two hazardous fragment strikes on the average in the plan area of a house 30 ft. by 40 ft., and to five strikes in the area of a modest-sized city lot 30 ft. by 100 ft.

4. A definition of an unacceptable concentration of fragments in the context of relatively thin personnel densities will make it possible to proceed to the evaluation of site-specific risks on a common basis.

(REPRODUCTION #8)

RECOMMENDATION REGARDING INTERIM CHANGE 1-5

If the principles of Interim Change 1-5 are accepted, the text will be revised to specifically provide the following:

> When test or accident data are available to justify it, Class 7 ammunition and explosives will be additionally grouped into the distance zones used for non-mass detonating items; i. e., 400, 800, 1200, and 1800 ft. The 1235-ft distance will be primarily applicable to those cases in which no determination has been made as to the fragment range and density.

(REPRODUCTION #8)

ASESS-PP 4 May 1971

MEMORANDUM FOR: THE ASSISTANT SECRETARY OF THE ARMY (I&L)
THE ASSISTANT SECRETARY OF THE NAVY (I&L)
THE ASSISTANT SECRETARY, AIR FORCE (I&L)
THE DIRECTOR, DEFENSE AMMUNITION SUPPORT AGENCY

SUBJECT: Protection from Fragments and Debris Resulting from Explosions

1. References:

a. DOD Manual 4145.27-M "DOD Ammunition and Explosives Safety Standards," March 1969.

b. "Explosive Hazard Classification Procedures", (TB 700-2, NAVORDINST 8020.3, TO11A-1-47, DSAR 8220.1), 19 May 1967.

2. At its 260th meeting, 14 April 1971, the board unanimously adopted the following definitions with respect to protection of exposed personnel from subject hazards:

a. A hazardous fragment is one having an impact energy of 58 ft.-lbs. or greater.

b. An acceptable density of hazardous fragments is not more than one per 600 sq. ft.

3. In the application of these definitions to protection from fragments of small to moderate quantities of Cl 7 ammunition for which fragment protection distances are not presently tabulated, it was agreed that these items would be grouped into the distance zones used for non mass-detonating ammunition: 400, 800, 1200 and 1600 ft. based upon the availability of test or accident data to justify this action.

4. Implementation of these criteria by each service will require that suitable fragment data must now be obtained for those that and missile weapons which formerly have not been analyzed in this regard. Further, it will require that the fragment patterns be analyzed to greater distances than is normally done for military effectiveness evaluation.

5. Request action be taken to plan for the introduction of these important new criteria into the development and testing programs of your Department, and that you advise this office of your plans in developing this data.

(REPRODUCTION #9)
(Vol. 31, pp. 12,602 and 12,603)

ASHEE-PP 4 May 1971
SUBJECT: Protection from Fragments and Debris Resulting from Explosions

6. Early action will be taken to revise references 1a. and c. to reflect the new criteria.

CF:
DASD(I&H)

WILLIAM C. CHEN III
Colonel, USAF
Chairman

(REPRODUCTION #9)

INFORMATION ON DDESB TDY FUNDING

1. Reference:

a. OSA MO memo, 6 May 74, subj: Reduction in TDY Funding.

b. DoD Directive 5154.4, "The Department of Defense Explosives Safety Board," October 23, 1971.

c. Minutes of the 1st meeting of the Joint Army-Navy Board, July 2, 1928.

d. Joint letter, subj: Instructions from the Secretary of War and the Secretary of the Navy, October 6, 1928.

2. History of the Department of Defense Explosives Safety Board (DDESB)

a. The DDESB was originally established by Act of Congress in 1927 and was known as the Joint Army-Navy Board, the Joint Board, or just the Board. The first Chairman of the Board was Brigadier General Samuel Hof, Assistant to the Chief of Ordnance, War Department. The first meeting of the Joint Board was held on 2 July 1928. A copy of the minutes of the first meeting of the Board is attached for information. As noted, the Board at its first meeting discussed its mission in order to comply with the Act of Congress approved 29 May 1928 (Second Deficiency Act, FY 1928). Additional instructions from the Secretary of War and the Secretary of the Navy were given to the Joint Board in reference 1d, copy attached. From the first meeting of the Board, July 2, 1928, until the present, the Board has had the following key responsibilities established by Acts of Congress and instructions from the Secretaries of the War and Navy Departments:

(1) Keep advised of storage of ammunition and components thereof for the use of the Army and Navy in order that steps could be taken to keep them properly dispersed and preventing hazardous conditions from arising to endanger life and property within and without storage reservations.

(2) Advise the Secretary of War and the Secretary of the Navy that the recommendations contained in House Document 199, 70th Congress (the report of proceedings of the Joint Army-Navy Board convened in obedience to an Act of Congress approved 22 December 1927) were being carried out.

(3) Correspondence will be direct from the Chairman of the Board to the Secretaries of War and Navy for study plans for new storages for both the Army and Navy together with the proposed amounts of ammunition to be stored and, prior to undertaking work of construction, to approve the plans if conforming to the standards layed down in the report of the Joint Board, House Document 199; or otherwise to make recommendations for such changes in the plans as may be necessary to bring them up to required standards.

(REPRODUCTION 10)

(Vol. 35, pp. 15,223-15,229, inc.)

(4) Establish explosives safety standards beginning in 1928 as a part of House Document 199 with the adoption of the laws of the State of New Jersey regarding explosives which incorporated in the law the American Table of Distances for its standard of safety.

b. Important affirmations and additions to the responsibilities of the Board were made by the U. S. Attorney General and a record of these findings is in a letter dated October 27, 1949 from the U. S. Attorney General, J. Howard McGrath to the Secretary of the Navy. The following parts of the letter are quoted which include decisions of the Attorney General.

"In a memorandum (prepared in the office of the Judge Advocate General of the Army) which the Acting Secretary submitted with his request, it is stated that during the years 1945 and 1946 the Board established under the 1928 act conducted a series of model and full-scale explosives safety tests "and as a result certain modification in existing safety tables were recommended." The memorandum indicates further "that the Board has never considered that the Army and Navy were bound by New Jersey Safety Laws, but on the contrary, have only used them as a guide in their activities since 1928." Moreover, it has been pointed out by representatives of the Army, Navy, and Air Force in conferences in which members of my staff have participated that (1) types of explosives unknown in 1928 have since been developed and (2) since 1928 some improved methods of construction of storage facilities have been devised.

"A memorandum approved by the Judge Advocate General of the Navy, however, states: "By the Act of 1928 Congress expressed approval of the recommendations made under the Act of 1927, and ordered them enforced by the Joint Board and the Secretaries. There is no language used in either the Act of 1927 or the Act of 1928 to indicate a delegation of administrative discretion to change the rules for safe storage of ammunition recommended in the report, House Document 199, 70th Congress, and adopted by the Congress in its Act of 1928."

.....

"Moreover, the House Committee which drafted the 1928 act recommended the creation of the board "to have jurisdiction over the execution of the programs now recommended for adoption, and to see that, if and when adopted, no further undesirable situations are permitted to creep in. In other words, to be an agency to guard against repetition of the conditions now confronting us." H. Rept. 1731, 70th Cong. 1st sess. p. 12. Aside from any questions relating to the execution of the specific programs (undoubtedly long since concluded), it seems clear that the Board was intended to be a discretionary agency, free to take appropriate action warranted by future exigencies.

"It is therefore, my opinion that the Board in the execution of its statutory duty to "keep advised of storage supplies of ammunition and components thereof *** with special reference to keeping such supplies

(REPRODUCTION #10)

properly dispersed and stored," etc., had the authority to establish safety standards and has the authority now to make changes therein. As to whether these can have, as the Acting Secretary has asked, "binding legal force," it is my opinion that they must be considered binding, but only as minimum safety standards."

Under these decisions of the Attorney General, the Board's responsibilities were further defined as follows:

(1) The Board has a statutory duty to "keep advised of storage supplies of ammunition and components thereof with special reference to keeping such supplies properly dispersed and stored."

(2) The Board has the authority to establish explosives safety standards and the authority under this decision to make changes therein. The Board "was intended to be a discretionary agency, free to take appropriate action warranted by future exigencies."

(3) The explosives safety standards of the Board have "binding legal force," but must be considered binding only as minimum safety standards.

c. Throughout the years from its beginning in 1928 to the present, the responsibilities of the Board have not changed in direction but have changed in scope with many additions being made in its area of responsibilities. The present authority for the Board and its responsibilities are outlined in reference 1b, DoD Directive 5154.4, 23 Oct 71, with change 17 Nov 71. Some of the important added responsibilities of the Board affecting manpower requirements and travel funding requirements are as follows:

(1) Board responsibilities originally limited to the storage of ammunition have been expanded to include ammunition and explosives manufacturing, testing, reworking, disposal, handling, and transportation.

(2) Explosives safety standards established by the Board must be expanded to include all phases of ammunition operations.

(3) Regulations for and arbitrations with the Military Departments on explosives hazard classifications must include manufacturing and transportation.

(4) The survey program of the Board to study and evaluate DoD activities to determine compliance with ammunition and explosives safety standards and to detect conditions which could result in undue loss of life or damage to property inside and outside DoD installations has increased tremendously the manpower and travel fund requirements over the past several years. A prescheduled travel program is a part of the survey program and survey engineers are scheduled using the following priorities:

(REPRODUCTION #10)

(a) Urgent requests from the Military Departments or the Secretary of Defense to solve specific emergency problems have first priority. Examples of some of these are:

1. Deputy Secretary of Defense Clements request for the Board and Staff Engineers to observe bomb loading facilities and operations at NAD Hawthorne and NAD McAlester and advise the Secretary within seven days as to the safety of transport of Navy bombs manufactured at those activities.

2. Assistant Secretary of Defense (I&L) request for the Board and Staff Engineers to make an on-site evaluation of Johnston Island and advise as to the feasibility of construction of facilities and storage of chemical munitions on Johnston Island.

3. U. S. Army Pacific urgent request for Staff Engineer of the Board to make an on-site evaluation of ammunition facilities under construction in Thailand and make recommendations as to changes required to make the facilities useable and to salvage the funds allocated to the construction contract.

4. Deputy Assistant Secretary of Defense (PEMA) request for Chairman of the Board and Staff Engineer to assist in an on-site review and study of ammunition storage and facilities of the Army, Navy, and Air Force in the European Theatre.

5. Deputy Assistant Secretary of Defense (PEMA) request to assist in on-site review and study of ammunition storage and facilities of Army, Navy, and Air Force in the Pacific Theatre including Southeast Asia and Far East.

These are examples of requests that require immediate response from the Board and involve manpower and travel fund requirements. Board team efforts of this nature may require eight or more team personnel with travel to the location of the problem site with attendant travel fund requirements.

(b) Next priority is given to Department of Defense installations which are operationally active and have urgent problem areas requiring Board attention and these are visited, surveyed, and assistance given as often as required. Installations which have received this priority attention include:

1. Okinawa, Ryukyus Islands, before and during the period of special ammunition shipments out of Okinawa.

2. Caerwent Depot, United Kingdom during the U. S. Army storage and construction planning, initial ammunition storage time frame and later phases of construction planning.

(REPRODUCTION #10)

3. Various Army ammunition plants in CONUS during periods of expanded production or when there was an increase in accident experience.

4. Various Navy ammunition depots with production facilities that encountered explosives safety problems.

(c) DoD installations which are operationally active or have changes in mission are scheduled for survey annually.

(d) All other DoD installations are scheduled in accordance with their degree of activity and based on past experience.

The preplanned schedule includes scheduled surveys of approximately 300 DoD installations in CONUS. It also includes all overseas DoD installations either storing U.S. owned ammunition and/or where U.S. military or civilian personnel are involved in ammunition operations, including NATO facilities. Scheduled surveys are planned for approximately 150 overseas installations. In addition, selected surveys are made of the ammunition supply points, reserve ammunition supply points, quick reaction sites, and basic load sites in both Germany and Korea. As an example of the magnitude of this task, there are approximately 300 ammunition basic load sites in Germany and Korea.

d. The responsibilities of the Board were significantly enlarged or expanded in 1968 to include chemical munitions and agent fillers within the Board's responsibilities. This again includes all phases: manufacturing, transportation, handling, storage, disposal, approval of site plans, approval of operations, and particularly the approval of demilitarization and disposal plans and operations. This is a large task to which we are now obligating three to four man-years of effort annually with much added travel. This has had a large and measurable effect on manpower requirements and travel fund requirements. This effort is entirely and exclusively in support of and to monitor the U. S. Army operations in this area. As an example, one demilitarization operation of one type of chemical ammunition item at an Army installation is funded by the program manager at an estimated cost of 32.8 million dollars and requires great manpower and travel fund programming to review concept plans, evaluate operational procedures, survey start-up, test run and pilot run operations, survey continuing production demilitarization operations, and review and evaluate on-site the many problems that demilitarization and disposal of chemical munitions and agents involve.

e. Another new responsibility of the Board is to review 11508/11724 GSA land survey actions. It is the responsibility of the Board to search out the problem areas involved in proposed land releases and advise the Secretary of Defense regarding these land release problems. The Board evaluates and surveys where required these locations where land is recommended for release. In calendar year 1973, 183 GSA land actions were processed. Problem areas encountered in these evaluations include:

(REPRODUCTION #10)

(1) Artillery firing ranges or bombing ranges contaminated with surface and subsurface explosive ordnance and ammunition.

(2) Buried ammunition or chemicals which have been disposed of over the past many years by burial in the earth.

(3) Contaminated ammunition manufacturing and process buildings, sumps, drainage lakes, underground drain lines and pipe lines, and contaminated earth from these explosives or chemical manufacturing processes.

(4) Safety zones required around ammunition and chemical facilities which might be part of the land release package.

The Board advises and recommends that land not be released when a safety zone is violated or when any ammunition or chemical contamination could endanger the general public. This responsibility alone requires manpower and travel funds to survey and evaluate these contaminated land areas wherever they may be.

f. The Assistant Secretary of Defense (I&L) and the Director of Defense Research and Engineering have jointly designated the DDESB as the Administrative Agent and Action Office for U.S. participation in the NATO "Group of Experts on the Safety Aspects of Transportation and Storage of Military Ammunition and Explosives" AC/258 and is required to support a number of group and sub-group meetings and to observe and assist in the planning of tests sponsored by this group. In addition, and corollary with this, at the request of the Department of Transportation, the DDESB has been charged by ASD(I&L) with providing a technical advisor on ammunition and explosives safety at semi-annual meetings of the UNO Group of Experts on Explosives. Each of these assignments requires extensive travel on the part of one or more people.

g. The Chairman, DDESB is responsible for an annual RDT&E budget of $500,000. Monitoring the various contracts and projects executed under this RDT&E program element requires extensive travel which must be accomplished at times appropriate to the ongoing work.

h. There are many other areas of responsibility in which manpower requirements and travel funding is involved and in most cases the effect is that the requirements for travel funding are increased.

3. The Department of Defense Explosives Safety Board has a charter with responsibilities derived from Acts of Congress and from DoD Directives. Specifically in the area of travel fund requirements, the Board has a statutory duty to survey and evaluate all DoD ammunition facilities worldwide.

4. In view of the above, the DDESB preplans and preschedules workload and travel with prudent use of funds but as required to carry out its responsibilities. Based on the increased workload and travel requirements, it is

(REPRODUCTION #10)

estimated that the travel fund requirements for FY 75 will increase by 20% to 25% over FY 74. Much of the additional manpower requirements and travel fund requirements are specifically in the area of support to and monitoring of U. S. Army ammunition and chemical operations.

DDESB/BLK/bjm
20 May 1974

(REPRODUCTION #10)

DRAFT - 30 Sept 1970
H. L. Metcalf

MEMORANDUM FOR SECRETARY ARMY, NAVY, AF

SUBJECT: Authority to Waive Explosives Safety Standards

A recent question has arisen regarding authority to issue waivers or exemptions to DoD Exposives Safety Standards.

DoD Directive 5154.4, the Department of Defense Explosives Safety Board exempts from its coverage "Facilities being constructed under combat conditions or the immediate expectation of such conditions". It also provides for waivers or exemptions to DDESB standards for "Strategic or other impelling reasons".

In DoD Standard 5154.4S, waivers and exemptions are defined. A waiver is a "written authority which provides a temporary exception and permits deviation from a mandatory requirement of these standards. It is generally granted for short periods of time pending cancellation as a result of termination of scheduled work commitments or correction of the waived conditions." Thus, a waiver is intended to cover temporary, or emergency, or limited and local conditions of a nature reasonably within the responsibility and authority of the activity DoD Component commander to accept or correct as necessary.

(REPRODUCTION #11)
(Vol. 41, pp. 17532-3)

Exemptions on the other hand are issued to cover general and long term situations having significant implications of possible loss of DoD personnel or materials or of public harm in the event of an accident. Therefore, except in those relatively rare cases where the Congress has granted an exemption by Act or Resolution (as in the case of Port Chicago), exemptions are limited to those cases where a Secretary, Deputy Secretary, or Undersecretary of Defense or a Military Department has made a finding and determination of necessity. Because of the severe public policy involvements that may be associated with or develop from exemptions, delegation of authority below the Deputy and Undersecretary level is neither feasible nor desirable.

There is no criterion by which all cases can be evaluated to determine whether a waiver or an exemption would be correct. Individual situations must be examined as they arise.

Frank A. Shrontz
ASD (I&L)

(REPRODUCTION #11)

DDESB-KT 13 October 1976 RCH/bjm

MEMORANDUM FOR: COL G. G. WATSON, ARMY MEMBER, DDESB
CAPT D. W. KNUTSON, NAVY MEMBER, DDESB
COL G. J. CORAK, AIR FORCE MEMBER, DDESB

SUBJECT: Standardized Hazard Classification Information

1. Reference is made to change 1 of DoD 5154.4S, DoD Ammunition and Explosives Safety Standards, dated March 1976.

2. The major portion of the referenced change pertains to the adoption of a new hazard classification system based upon the recommendations of the United Nations Organization. Each Military Department has been engaged in conversion from the present system to the new system of classification for its ammunition and explosives and anticipates implementation of the new system in calendar year 1977.

3. It is highly desirable that a uniform system be used by the Services for documentation of this new hazard information. At present each Service utilizes a different format for this information. This practice not only increases the probability of using erroneous hazard data, but it also leads to the same items having different classifications as has been found while converting to the new system.

4. It is understood that each Service is at present planning to produce the new hazard classification information by computerization. Discussions have indicated that all desire the same type of information; therefore, a uniform system should be easy to achieve.

5. It is requested that the responsible office of your Department be tasked to coordinate with the responsible offices of the other Services in developing a standardized format for the computerization of hazard classification information.

P. G. KELLEY, JR.
Colonel, USA
Chairman

(REPRODUCTION #12)
(Vol. 41, p. 17,525)

DEPARTMENT OF THE NAVY
OFFICE OF THE CHIEF OF NAVAL OPERATIONS
WASHINGTON, D.C. 20350

IN REPLY REFER TO
Ser 411/710408
29 Sep 1976

From: Chief of Naval Operations
To: Chairman, Department of Defense Explosives Safety Board

Subj: Explosives Safety Handling Arc for Torpedo Evolutions

Ref: (a) DOD Standard 5154.4S, DOD Ammunition and Explosives Safety Standards
(b) CNO memo ser 04/708897 of 18 June 1976

Encl: (1) Briefing Material, same subject

1. In accordance with the criteria of reference (a), article 3.3C, and the schedule of reference (b), paragraph 1a.(5), enclosure (1) is forwarded for early review.

2. The proposed meeting date of 27 October 1976, 0900-1200, is confirmed for presentation of subject briefing to the Chairman and Secretariat of the Explosives Safety Board.

3. It is recommended that the explosives safety arc for up to 1500 pounds of explosives in Navy torpedoes be established at 500 feet radius for handling evolutions with necessary shielding in transport vehicles. The test data provided in enclosure (1) reinforces the recommendation.

F. J. ALLSHOUSE
By direction

Copy to: (w/o encl)
COMNAVSEASYSCOM (332, 04H)

(REPRODUCTION #13)
(Vol. 41, p. 17,526)

DDESB-KI 28 October 1976 RHK/et al/bjm

SUBJECT: Explosives Safety Quantity-Distance Requirements for Torpedoes

Chief of Naval Operations
Department of the Navy
Attn: OP-04
Washington, D. C. 20350

1. References:

a. CNO ltr Ser 411/710408 of 29 Sep 76, subj: Explosives Safety Handling Arc for Torpedo Evolutions.

b. Conference held 27 Oct 76 in DDESB offices, subject as above.

c. Paragraph 5-2 F 2, DoD 5154.4S.

2. The data presented in reference 1a has been reviewed and further discussed in reference 1b. The comprehensive nature of the test program conducted on this subject and the subsequent thorough analysis of resulting data are acknowledged. Accordingly, the recommended 500-foot explosives safety distance is concurred in for up to 1500 pounds of explosives in Navy torpedoes, provided the torpedoes are in transport vehicles equipped with necessary shielding equivalent to that utilized in the test program, and when the 1500 pounds (NEW) is the maximum credible amount which can be involved in a single incident.

3. This evaluation of the torpedoes is considered adequate for compliance with reference 1c for up to 1500 pounds NEW under the conditions stated and an interim change to the standard will be issued to reflect that fact.

CF:
OP-411

P. G. KELLEY, JR.
Colonel, USA
Chairman

(REPRODUCTION #14)
(Vol. 41, p. 17,527)