ADA 054430 [redacted]

AFML-TR-77-162

DEVELOPMENT OF MIL-HDBK-5 DESIGN ALLOWABLE PROPERTIES AND FATIGUE- CRACK-PROPAGATION DATA FOR SEVERAL AEROSPACE MATERIALS

BATTELLE'S COLUMBUS LABORATORIES
505 KING AVENUE
COLUMBUS, OHIO 43201

20080819 217

OCTOBER 1977

TECHNICAL REPORT AFML-TR-77-162
FINAL REPORT FOR THE PERIOD 31 JANUARY 1975–30 JUNE 1977

Approved for public release; distribution unlimited.

AIR FORCE MATERIALS LABORATORY
AIR FORCE SYSTEMS COMMAND
WRIGHT-PATTERSON AIR FORCE BASE, OHIO 45433

NOTICE

When Government drawings, specifications, or other data are used for any purpose other than in connection with a definitely related Government procurement operation, the United States Government thereby incurs no responsibility nor any obligation whatsoever; and the fact that the Government may have formulated, furnished, or in any way supplied the said drawings, specifications, or other data, is not to be regarded by implication or otherwise as in any manner licensing the holder or any other person or corporation, or conveying any rights or permission to manufacture, use, or sell any patented invention that may in any way be related thereto.

This technical report has been reviewed and is approved for publication.

C L Harmsworth

C. L. Harmsworth, Technical Manager
for Engineering and Design Data
Materials Integrity Branch
Systems Support Division
Air Force Materials Laboratory

FOR THE COMMANDER

T D Cooper

T. D. Cooper, Chief
Materials Integrity Branch
Systems Support Division
Air Force Materials Laboratory

This report has been reviewed by the Information Office (OI) and is releasable to the National Technical Information Service (NTIS). At NTIS, it will be available to the general public, including foreign nations.

Copies of this report should not be returned unless return is required by security considerations, contractual obligations, or notice on a special document.

UNCLASSIFIED

SECURITY CLASSIFICATION OF THIS PAGE (When Data Entered)

REPORT DOCUMENTATION PAGE

READ INSTRUCTIONS BEFORE COMPLETING FORM

1. REPORT NUMBER
AFML-TR-77-162

2. GOVT ACCESSION NO.

3. RECIPIENT'S CATALOG NUMBER

4. TITLE (and Subtitle)
DEVELOPMENT OF MIL-HDBK-5 DESIGN ALLOWABLE PROPERTIES AND FATIGUE-CRACK PROPAGATION DATA FOR SEVERAL AEROSPACE MATERIALS

5. TYPE OF REPORT & PERIOD COVERED
Final, January 31, 1975-June 30, 1977

6. PERFORMING ORG. REPORT NUMBER

7. AUTHOR(s)
Paul E. Ruff and Samuel H. Smith

8. CONTRACT OR GRANT NUMBER(s)
F33615-75-C-5063

9. PERFORMING ORGANIZATION NAME AND ADDRESS
Battelle's Columbus Laboratories
505 King Avenue
Columbus, Ohio 43201

10. PROGRAM ELEMENT, PROJECT, TASK AREA & WORK UNIT NUMBERS
Project No. 7381

11. CONTROLLING OFFICE NAME AND ADDRESS
Air Force Materials Laboratory/MXA
Wright-Patterson Air Force Base, Ohio 45433

12. REPORT DATE
October 1977

13. NUMBER OF PAGES
195

14. MONITORING AGENCY NAME & ADDRESS (if different from Controlling Office)
DCASMA, Dayton
Defense Electronics Supply Center
Building 5
1502 Wilmington Pike, Dayton, Ohio 45444

15. SECURITY CLASS. (of this report)
Unclassified

15a. DECLASSIFICATION/DOWNGRADING SCHEDULE

16. DISTRIBUTION STATEMENT (of this Report)
Approved for public release; distribution unlimited.

17. DISTRIBUTION STATEMENT (of the abstract entered in Block 20, if different from Report)

18. SUPPLEMENTARY NOTES

19. KEY WORDS (Continue on reverse side if necessary and identify by block number)

tensile yield strength
tensile ultimate strength
compressive yield strength
shear ultimate strength
bearing yield strength
bearing ultimate strength
compressive modulus of elasticity
Poisson's ratio
stress-strain curves
stress-tangent modulus curves
fatigue-crack-propagation

20. ABSTRACT (Continue on reverse side if necessary and identify by block number)

This final report describes a test program to determine certain missing MIL-HDBK-5 design allowable properties for 17-4PH bar, 15-5PH bar, and Alloy 188 sheet and to develop low stress intensity fatigue-crack-propagation data for 7075-T7351, 7475-T7351, and 2124-T851 plate.

DD FORM 1 JAN 73 1473 EDITION OF 1 NOV 65 IS OBSOLETE

Unclassified

SECURITY CLASSIFICATION OF THIS PAGE (When Data Entered)

ADA054430

FOREWORD

This final report was submitted by Battelle's Columbus Laboratories, 505 King Avenue, Columbus, Ohio 43201, under Contract F33615-75-C-5053, Project No. 7381 with the Air Force Materials Laboratory, Wright-Patterson Air Force Base, Ohio. Mr. C. L. Harmsworth (MXA) was the laboratory project monitor. This report covers the period of work from January 31, 1975 through June 30, 1977. Walter S. Hyler was program manager and Paul E. Ruff and Samuel H. Smith were the authors. The authors wish to express their appreciation to Messrs. Thomas Forte and Richard Rice for their assistance and meticulous attention to detail during the conduct of this program. This report was submitted by the authors in July 1977.

TABLE OF CONTENTS

	Page
INTRODUCTION	1
OBJECTIVE	2
EXPERIMENTAL PROCEDURES	3
17-4PH Precipitation Hardening Stainless Steel Bar	3
Alloy 188 Sheet	21
15-5PH Precipitation Hardening Stainless Steel Bar	60
Threshold ΔK and Low da/dN Evaluation	106
APPENDIX A. SPECIMEN CONFIGURATIONS	137
APPENDIX B. TEST PROCEDURES	145
APPENDIX C. FATIGUE-CRACK-PROPAGATION DATA	151
REFERENCES	195

LIST OF ILLUSTRATIONS

Figure		Page
1	Location of Test Specimens for 17-4PH Bar -- Code H	7
2	Location of Test Specimens for 17-4PH Bar -- Code K	7
3	Location of Test Specimens for 17-4PH Bar -- Code I	8
4	Location of Test Specimens for 17-4PH Bar -- Code J	8
5	Location of Test Specimens for 17-4PH Bar -- Code L	9
6	Location of Test Specimens for 17-4PH Bar -- Code M	9
7	Location of Test Specimens for 17-4PH Bar -- Code N	10
8	Location of Test Specimens for 17-4PH Bar -- Code O	10
9	Location of Test Specimens for 17-4PH Bar -- Code P	11
10	Location of Test Specimens for 17-4PH Bar -- Code Q	11
11	Location of Test Specimens for Alloy 188 Sheet -- Codes A, B, and C	25

LIST OF ILLUSTRATIONS (Continued)

Figure		Page
12	Location of Test Specimens for Alloy 188 Sheet -- Codes D, E, and F	26
13	Location of Test Specimens for Alloy 188 Sheet -- Codes G, H, and I	27
14	Working Curve Showing Effect of Temperature on the Tensile Ultimate Strength of Alloy 188 Sheet	40
15	Working Curve Showing Effect of Temperature on the Tensile Yield Strength of Alloy 188 Sheet	40
16	Working Curve Showing Effect of Temperature on the Compressive Yield Strength of Alloy 188 Sheet	41
17	Working Curve Showing Effect of Temperature on the Elongation of Alloy 188 Sheet	43
18	Working Curve Showing Effect of Temperature on Modulus of Elasticity for Alloy 188	44
19	Working Curve Showing Effect of Temperature on Poisson's Ratio (μ) for Alloy 188	45
20	Working Curve Showing Effect of Temperature on Physical Properties of Alloy 188	49
21	Proposed MIL-HDBK-5 Section 6.4.2 for Alloy 188	51
22	Proposed MIL-HDBK-5 Figure 6.4.2.0	53
23	Proposed MIL-HDBK-5 Figure 6.4.2.1.1(a)	54
24	Proposed MIL-HDBK-5 Figure 6.4.2.1.1(b)	54
25	Proposed MIL-HDBK-5 Figure 6.4.2.1.2	55
26	Proposed MIL-HDBK-5 Figure 6.4.2.1.4(a)	56
27	Proposed MIL-HDBK-5 Figure 6.4.2.1.4(b)	57
28	Proposed MIL-HDBK-5 Figure 6.4.2.1.5	57
29	Proposed MIL-HDBK-5 Figure 6.4.2.1.6(a)	58
30	Proposed MIL-HDBK-5 Figure 6.4.2.1.6(b)	59
31	Location of Test Specimens for 15-5PH Bar, H1150-Code A	64
32	Location of Test Specimens for 15-5PH Bar, H1150-Code B	65

LIST OF ILLUSTRATIONS (Continued)

Figure		Page
33	Location of Test Specimens for 15-5PH Bar, H1150-Code C.	66
34	Location of Test Specimens for 15-5PH Bar, H1150-Code E.	67
35	Location of Test Specimens for 15-5PH, H1150-Code F.	68
36	Location of Test Specimens for 15-5PH, H1150-Code G.	69
37	Location of Test Specimens for 15-5PH, H1025-Code B.	70
38	Location of Test Specimens for 15-5PH, H1025-Code C.	71
39	Location of Test Specimens for 15-5PH, H1025-Code E.	72
40	Location of Test Specimens for 15-5PH, H1025-Code B.	81
41	Location of Test Specimens for 15-5PH, H1025-Code F and G. . . .	82
42	Working Curve Showing Effect of Temperature on Compressive Yield Strength (F_{cy}) of 15-5PH (H1025) Stainless Steel Bar . .	92
43	Working Curve Showing Effect of Temperature on Compressive Yield Strength (F_{cy}) of 15-5PH (H1150) Stainless Steel Bar . .	92
44	Working Curve Showing Effect of Temperature on Compressive Modulus (E_c) of 15-5PH Stainless Steel	94
45	Proposed MIL-HDBK-5 Figure 2.5.6.2.2	101
46	Proposed MIL-HDBK-5 Figure 2.5.6.3.2	101
47	Proposed MIL-HDBK-5 Figure 2.5.6.1.4	102
48	Proposed MIL-HDBK-5 Figure 2.5.6.2.6(a).	103
49	Proposed MIL-HDBK-5 Figure 2.5.6.3.6(a).	104
50	Proposed MIL-HDBK-5 Figure 2.5.6.1.6(b).	105
51	Crack Length-Cycles Behavior for 7075-T7351 at R = 0.500	109
52	Crack Length-Cycles Behavior for 7075-T7351 at R = 0.250	110
53	Crack Length-Cycles Behavior for 7075-T7351 at R = 0.100	111
54	Crack Length-Cycles Behavior for 7075-T7351 at R = 0.500, 0.250, 0.100 (Additional Data)	112
55	Crack Length-Cycles Behavior for 7475-T7351 at R = 0.500	113
56	Crack Length-Cycles Behavior for 7475-T7351 at R = 0.250	114

LIST OF ILLUSTRATIONS (Continued)

Figure		Page
57	Crack Length-Cycles Behavior for 7475-T7351 at R = 0.100	115
58	Crack Length-Cycles Behavior for 7475-T7351 at R = 0.100 0.070, 0.250, 0.500 (Additional Data)	116
59	Crack Length-Cycles Behavior for 2124-T851 at R = 0.500	117
60	Crack Length-Cycles Behavior for 2124-T851 at R = 0.250	118
61	Crack Length-Cycles Behavior for 2124-T851 at R = 0.100	119
62	Crack Length-Cycles Behavior for 2124-T851 at R = 0.500, 0.250, 0.100 (Additional Data)	120
63	Fatigue Crack Growth Rate for 7075-T7351 at R = 0.500	121
64	Fatigue Crack Growth Rate for 7075-T7351 at R = 0.250	122
65	Fatigue Crack Growth Rate for 7075-T7351 at R = 0.100	123
66	Fatigue Crack Growth Rate for 7475-T7351 at R = 0.500	124
67	Fatigue Crack Growth Rate for 7475-T7351 at R = 0.250	125
68	Fatigue Crack Growth Rate for 7475-T7351 at R = 0.100	126
69	Fatigue Crack Growth Rate for 2124-T851 at R = 0.500	127
70	Fatigue Crack Growth Rate for 2124-T851 at R = 0.250	128
71	Fatigue Crack Growth Rate for 2124-T851 at R = 0.100	129
72	Fatigue Crack Growth Rate for 7075-T7351 at Various R Ratios . .	130
73	Fatigue Crack Growth Rate for 7475-T7351 at Various R Ratios . .	131
74	Fatigue Crack Growth Rate for 2124-T851 at Various R Ratios . .	132
75	Variation of Threshold ΔK with R Ratio for Aluminum Alloys Evaluated	135
A-1	Subsize Round Tensile Specimen	138
A-2	Round Tensile Specimen	138
A-3	Bearing Specimen	139
A-4	Round Compression Specimen	140
A-5	Sheet Tensile Specimen — 1" Gage Length.	140
A-6	Sheet Compression Specimen	141

LIST OF ILLUSTRATIONS (Continued)

Figure		Page
A-7	Sheet Shear Specimen	141
A-8	Sheet Bearing Specimen	142
A-9	Multiflaw Center-Crack Panel Configurations (45 inches long)	143
A-10	Multiflaw Center-Crack Panel Configurations (36 inches long)	144
B-1	Bearing Test Setup	148

LIST OF TABLES

Table		Page
1	Test Plan for 17-4PH Bar, H1025 and H1150 Conditions	4
2	Chemical Compositions of 17-4PH Test Materials	6
3	Longitudinal Mechanical Properties of 17-4PH Bar, Condition H1025	12
4	Longitudinal Mechanical Properties of 17-4PH Bar, Condition H1150	13
5	Determination of BYS/TYS Reduced Ratios for 17-4PH Bar H1025 Condition.	15
6	Determination of BUS/TUS Reduced Ratios for 17-4PH Bar H1025 Condition.	16
7	Determination of BYS/TYS Reduced Ratios for 17-4PH Bar H1150 Condition.	17
8	Determination of BUS/TUS Reduced Ratios for 17-4PH Bar H1150 Condition.	18
9	Proposed MIL-HDBK-5 Table 2.5.8.0(f)	20
10	Test Plan for Alloy 188 Sheet.	22
11	Chemical Compositions of Alloy 188 Test Materials.	24
12	Mechanical Properties of Alloy 188 Sheet	29
13	Precision Compressive Modulus Test Results for Alloy 188 Sheet	32
14	Determination of Ultimate Strength Ratios for Annealed Alloy 188 Alloy Sheet.	34
15	Determination of Yield Strength Ratios for Annealed Alloy 188 Alloy Sheet.	35

LIST OF TABLES (Continued)

Table		Page
16	Effect of Temperature on TUS of Annealed Alloy 188 Sheet	37
17	Effect of Temperature on TYS of Annealed Alloy 188 Sheet	38
18	Effect of Temperature on CYS of Annealed Alloy 188 Sheet	39
19	Determination of Ramberg-Osgood Parameters for Room Temperature Tensile Stress-Strain Curves for Alloy 188 Sheet	47
20	Determination of Ramberg-Osgood Parameters for Long Transverse Compressive Stress-Strain Curves for Alloy 188 Sheet	47
21	Parameters for Construction of Typical Long Transverse Compressive Stress-Strain and Tangent Modulus Curves for Alloy 188.	48
22	Proposed MIL-HDBK-5 Table 6.4.2.0(b)	52
23	Test Plan for 15-5PH Bar H1150 Condition	62
24	Test Plan for 15-5PH Bar H1025 Condition	62
25	Chemical Compositions of 15-5PH Test Materials	63
26	Mechanical Properties of 15-5PH Bar Condition H1150.	73
27	Longitudinal Mechanical Properties of 15-5PH Bar Condition H1025	74
28	Determination of BUS/TUS Reduced Ratios for 15-5PH Bar H1150 Condition.	76
29	Determination of BYS/TYS Reduced Ratios for 15-5PH Bar H1150 Condition.	77
30	Comparison of Bearing Strength Reduced Ratios for Several Precipitation Hardening Corrosion Resistant Steels	80
31	Longitudinal Mechanical Properties 15-5PH Bar Condition H1025. .	83
32	Determination of BYS/TYS Ratios for 15-5PH Bar H1025 Condition .	84
33	Determination of BUS/TUS Ratios for 15-5PH Bar H1025 Condition .	85
34	Tests of Significance for BYS/TYS Ratios	87
35	Tests of Significance for BUS/TUS Ratios	88
36	Effect of Temperature on CYS for 15-5PH Bar H1025 Condition. . .	90
37	Effect of Temperature on CYS for 15-5PH Bar H1150 Condition. . .	91
38	Effect of Temperature on Compressive Modulus for 15-5PH Bar. . .	93

LIST OF TABLES (Continued)

Table		Page
39	Determination of Ramberg-Osgood Parameters for Longitudinal Compressive Stress-Strain Curves for 15-5PH Bar H1025.	96
40	Determination of Room Temperature of Ramberg-Osgood Parameters for Long Transverse Compressive Stress-Strain Curves for 15-5PH Bar H1025	96
41	Parameters for Construction of Typical Compressive Stress-Strain and Tangent Modulus Curves for 15-5PH H1025 Condition.	98
42	Determination of Ramberg-Osgood Parameters for Longitudinal Compressive Stress-Strain Curves for 15-5PH Bar 1150 Condition	98
43	Determination of Room Temperature of Ramberg-Osgood Parameter for Long Transverse Compressive Stress-Strain Curves for 15-5PH Bar H1150	99
44	Parameters for Construction of Typical Compressive Stress-Strain and Tangent Modulus Curves for 15-5PH Bar, H1150 Condition . .	99
45	Proposed MIL-HDBK-5 Table 2.5.6.0(c)	100
46	Test Plan.	106
47	Results of Threshold ΔK in Humid Invironment	133
C-1	Fatigue-Crack-Propagation Data for 7075-T7351 at R = 0.500 . . .	152
C-2	Fatigue-Crack-Propagation Data for 7075-T7351 at R = 0.250 . . .	156
C-3	Fatigue-Crack-Propagation Data for 7075-T7351 at R = 0.100 . . .	159
C-4	Fatigue-Crack-Propagation Data for 7475-T7351 at R = 0.500 . . .	164
C-5	Fatigue-Crack-Propagation Data for 7475-T7351 at R = 0.250 . . .	169
C-6	Fatigue-Crack-Propagation Data for 7475-T7351 at R = 0.100 . . .	173
C-7	Fatigue-Crack-Propagation Data for 2124-T851 at R = 0.500. . . .	181
C-8	Fatigue-Crack-Propagation Data for 2124-T851 at R = 0.250. . . .	185
C-9	Fatigue-Crack-Propagation Data for 2124-T851 at R = 0.100. . . .	189
C-10	Fatigue-Crack-Propagation Data for 2124-T851 at R = 0.070. . . .	194

LIST OF SYMBOLS

R	= reduced ratio, cyclic stress ratio
$\bar{r}$	= mean value of ratios
s	= standard deviation
$t_{0.95}$	= the 0.95 fractile of the t distribution corresponding to n-1 degrees of freedom
n	= number of ratios in sample, Ramberg-Osgood parameter
RT	= room temperature
F_{tu}	= ultimate tensile stress (design allowable)
F_{ty}	= tensile yield stress (design allowable)
F_{cy}	= compressive yield stress (design allowable)
F_{su}	= ultimate shear stress (design allowable)
F_{bru}	= ultimate bearing stress (design allowable)
F_{bry}	= bearing yield stress (design allowable)
E	= modulus of elasticity in tension
E_c	= modulus of elasticity in compression
μ	= Poisson's ratio
TUS	= tensile ultimate strength
TYS	= tensile yield strength
e	= elongation in percent
RA	= reduction in area
CYS	= compressive yield strength
SUS	= shear ultimate strength
e_{total}	= total strain
f	= stress
k	= constant
L	= longitudinal
LT	= long transverse
BUS	= bearing ultimate strength
BYS	= bearing yield strength
ksi	= thousands of pounds per square inch
psi	= pounds per square inch
ΔK	= range of cyclic stress intensity
ΔK_{th}	= stress intensity threshold

LIST OF SYMBOLS (Continued)

da/dN	= fatigue crack growth rate
a	= half crack length
w	= panel width
N	= cycles
K_{MAX}	= maximum stress intensity level
$\Delta\sigma$	= cyclic gross area stress range

SUMMARY

Certain design allowable properties were determined in accordance with MIL-HDBK-5 guidelines for three materials: 17-4PH and 15-5PH bar and Alloy 188 sheet. Bearing yield and ultimate strength allowables for e/D = 1.5 and e/D = 2.0 were determined for 17-4PH bar in the H1025 and H1150 conditions. Longitudinal tensile yield and tensile ultimate, longitudinal and long transverse compressive yield, shear ultimate and compressive modulus of elasticity design allowable properties as well as curves depicting the effect of temperature on these properties were developed for Alloy 188 sheet. Room temperature tensile stress-strain as well as room and elevated temperature compressive stress-strain and tangent modulus curves were also constructed for Alloy 188 sheet. Bearing yield and ultimate strength allowables for e/D = 1.5 and e/D = 2.0 were determined for 15-5PH in H1150 condition. Bearing yield and ultimate strength allowables for 15-5PH in H1025 condition were revised. Curves depicting the effect of temperature on compressive yield strength for 15-5PH in H1025 and H1150 conditions as well as curves showing the effect of temperature on tensile and compressive moduli of elasticity were established. Room and elevated temperature compressive stress-strain and tangent modulus curves for 15-5PH in H1025 and H1150 conditions were constructed.

Fatigue crack propagation data were obtained for 7075-T7351, 7475-T7351, and 2124-T851 plate in 95 percent or higher humidity environment at R = 0.50, 0.25, and 0.10. Fatigue crack growth rate data were generated in the low stress intensity range to complement the relatively high stress intensity data currently in the Damage Tolerant Design Handbook and make the data more acceptable for ultimate inclusion in MIL-HDBK-5. The data generated covered the range of da/dN = 10^{-9} to 10^{-4} inches/cycle with emphasis on 10^{-9} to 10^{-6} inches/cycle. Threshold cyclic stress intensity levels, ΔK_{th}, were determined for each alloy and R ratio in 95 percent or higher humidity environment. An average fit of the lower bound of ΔK_{th} versus R was determined.

INTRODUCTION

The Military Standardization Handbook, MIL-HDBK-5, is recognized as the primary source for design allowable data by the Department of Defense (DoD) and other Government agencies responsible for aerospace vehicle design. The Handbook contains design allowable data on metallic materials, fasteners, joints, and other structural elements. The maintenance of this document is achieved through the cooperative efforts of the Air Force, Navy, Army, Federal Aviation Agency (FAA), and industrial users and suppliers of metallic aerospace materials. The DoD has designated the Air Force as the activity responsible for preparing this Handbook. As such, the Air Force Materials Laboratory (AFML) has contracted with Battelle's Columbus Laboratories (BCL) to provide the planning, coordination, implementation, and testing necessary to develop and maintain current design allowable data and other related information in MIL-HDBK-5.

Recent final reports described in detail the functional and technical activities performed by BCL in connection with the MIL-HDBK-5 program. Since the functional as well as some of the technical activities are somewhat repetitive from year to year, this final report describes an experimental test program to develop certain missing MIL-HDBK-5 design allowable properties for several materials.

Most of the design allowable properties in MIL-HDBK-5 are determined from existing data. However, frequently data are lacking or inadequate to establish needed design properties. Data may be lacking for important design properties even though an alloy may have been used in the aerospace industry for many years. In addition, new heat treatments and new product forms may be developed for an existing alloy, thereby creating a need for applicable design properties. Also, MIL-HDBK-5 guidelines are continuously revised to provide for the inclusion of new

types of data, such as fracture toughness and fatigue-crack-propagation data. For these reasons testing is often necessary to supplement data available from the literature.

Consequently, the Army Material and Mechanics Research Center provided funding via Air Force Contract Number F33615-75-C-5063 for BCL to conduct an experimental test program to (1) develop lacking MIL-HDBK-5 design data, and (2) generate threshold fatigue-crack-propagation data for certain aerospace materials. Based upon interest expressed by the MIL-HDBK-5 Coordination Group, availability of existing mechanical property data, and the availability of test material, three materials, 17-4PH bar, 15-5PH bar, and Alloy 188 sheet were selected for testing to determine lacking design allowable properties. Three aluminum alloys, 7075-T7351, 2124-T851, and 7475-T7351, in plate form, were chosen for testing to obtain threshold fatigue-crack-propagation data.

OBJECTIVE

The objective of this program was to (1) develop certain missing MIL-HDBK-5 design allowable properties for 17-4PH stainless steel bar, 15-5PH stainless steel bar, and Alloy 188 sheet, and (2) obtain fatigue crack growth rate data at low stress intensities for 7075-T7351, 7475-T7351, and 2124-T851 aluminum alloy plate at R = 0.500, 0.250, and 0.100.

EXPERIMENTAL PROCEDURES

17-4PH Precipitation Hardening Stainless Steel Bar

Background—MIL-HDBK-5 currently contains bearing strength allowables for 17-4PH only in the H900 condition. With the increased emphasis on the use of materials in tempers and heat-treat conditions which exhibit improved fracture toughness and resistance to stress-corrosion cracking, it is desirable to establish "derived" properties for the overaged conditions. In a previous MIL-HDBK-5 test program[1], compressive yield strength and shear ultimate strength values were determined for the H1025 and H1150 conditions. In order to complete the room temperature mechanical property table for these two tempers, bearing yield and ultimate strengths for e/D = 1.5 and e/D = 2.0 are needed. Although 17-4PH is widely used, no bearing data could be found for these "overaged" conditions in the literature. Consequently, testing was required to obtain these data.

Test Plan—As defined in Chapter 1, Section 1.4.1.3 of MIL-HDBK-5, derived values are those room temperature mechanical property values that are established through their relationship to directly calculated values for room temperature F_{tu} and F_{ty}. The guidelines for the presentation of data as described in Chapter 9, Section 9.3.9.1, of MIL-HDBK-5 require at least ten pairs of measurements, each representing a single lot of material. For economic reasons it was decided to limit the number of heat treat conditions to be tested to the H1025 and H1150 tempers, the same heat treat conditions for which compressive yield strength and shear ultimate strength had previously been determined. These two tempers represent the minimum aging temperature for good stress corrosion resistance and the maximum aging temperature for the alloy, respectively. Table 1 shows the test plan to acquire the necessary data. All tests were scheduled in the longitudinal grain direction since suppliers do not guarantee transverse mechanical properties for 17-4PH.

(1) Ruff, P. E., "Determination of Selected MIL-HDBK-5 Design Allowable Properties for Five Aerospace Materials", AFML-TR-75-58, Battelle's Columbus Laboratories, May, 1975.

TABLE 1. TEST PLAN FOR 17-4PH BAR, H1025 AND H1150 CONDITIONS

Heat Identification	Grain Direction	Room Temperature		
		Tensile	Bearing e/D = 1.5	Bearing e/D = 2.0
336009	L	3	3	3
626436	L	3	3	3
626692	L	3	3	3
636003	L	3	3	3
626881	L	3	3	3
616501	L	3	3	3
626650	L	3	3	3
626787	L	3	3	3
600086	L	3	3	3
620402	L	3	3	3
	Total One Temper	30	30	30
	Total Two Tempers	60	60	60

Materials—The same ten heats of air melted bar that were evaluated in the previous project, reference (1), were utilized in this test program. The material had been supplied by Armco Steel Corporation at no cost. The bars, varying from 1 to 4-1/2 inches in thickness, were selected to encompass a wide thickness range. Chemical composition of the material as reported by Armco is shown in Table 2. All compositions conformed to the requirements of AMS 5643.

Heat Treatment—Appropriate lengths from each bar were solution treated at 1900 $\pm$ 25 F for 1/2 hour per inch of section thickness and air cooled to room temperature. The bars were precipitation heat treated at 1025 F or 1150 F for 4 hours and air cooled. All heat treatment was performed in air furnaces. In the previous investigation, a considerable amount of cold work (apparently from straightening) was detected in some of the bars which resulted in abnormally high tensile strengths after age hardening. Consequently, for this test program all bars were solution treated prior to precipitation hardening to remove cold work.

Specimen Preparation—After heat treatment, specimens were machined from the bars at the locations shown in Figures 1 through 10. The configurations of the various test specimens are shown in Figures A-1 through A-3, Appendix A.

Testing—Room temperature tensile and bearing tests were performed in accordance with the procedures described in Appendix B. The results of these tests are shown in Tables 3 and 4. All heats conformed to the producers' guaranteed minimum tensile properties for the H1025 and H1150 conditions.

Analysis—Derived values refer to those room temperature mechanical property values that are established through their relationships to directly calculated values for room temperature F_{tu} and F_{ty}. The procedure is applicable to F_{cy}, F_{su}, F_{bru}, and F_{bry} and involves the pairing of individual SUS and BUS measurements with TUS measurements for which F_{tu} has been established.

TABLE 2. CHEMICAL COMPOSITIONS OF 17-4PH TEST MATERIALS

Material Code	Heat Number	Chemical Analyses (weight, percent)								
		C	Mn	P	S	Si	Cr	Ni	Cu	Cb
H	336009	0.036	0.51	0.022	0.014	0.69	15.66	4.20	3.33	0.28
I	626436	0.032	0.34	0.019	0.014	0.57	15.91	4.24	3.32	0.26
J	626692	0.038	0.34	0.017	0.012	0.65	15.86	4.32	3.39	0.29
K	636003	0.040	0.42	0.023	0.014	0.84	15.57	4.24	3.36	0.26
L	626881	0.034	0.40	0.019	0.015	0.72	15.82	4.28	3.44	0.30
M	616501	0.034	0.36	0.018	0.006	0.62	15.94	4.34	3.37	0.24
N	626650	0.039	0.34	0.021	0.005	0.68	15.92	4.30	3.35	0.26
O	626787	0.037	0.31	0.018	0.014	0.72	15.62	4.55	3.40	0.27
P	600086	0.038	0.27	0.015	0.017	0.50	16.02	4.43	3.39	0.26
Q	620402	0.046	0.30	0.018	0.010	0.62	16.16	4.18	3.39	0.33
	AMS 5643	0.070 maximum	1.00 maximum	0.040 maximum	0.030 maximum	1.00 maximum	15.50-17.50	3.00-5.00	3.00-5.00	5xC-0.45

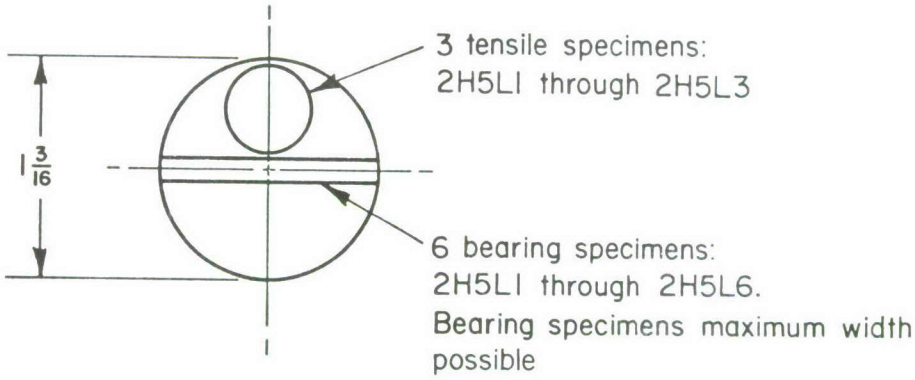

FIGURE 1. LOCATION OF TEST SPECIMENS FOR 17-4PH BAR -- CODE H

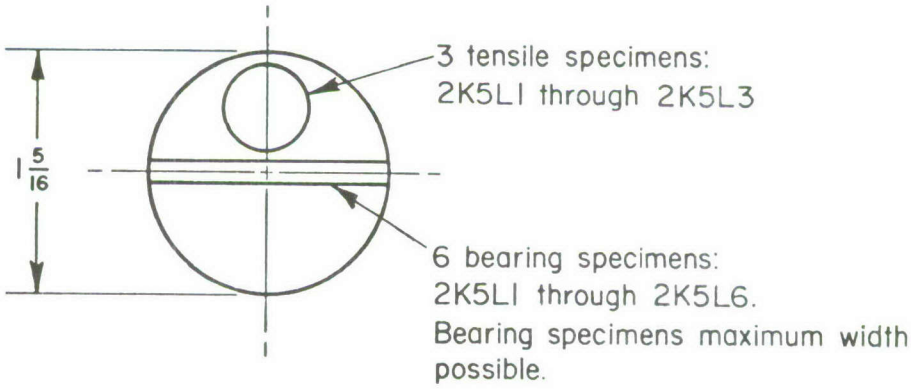

FIGURE 2. LOCATION OF TEST SPECIMENS FOR 17-4PH BAR -- CODE K

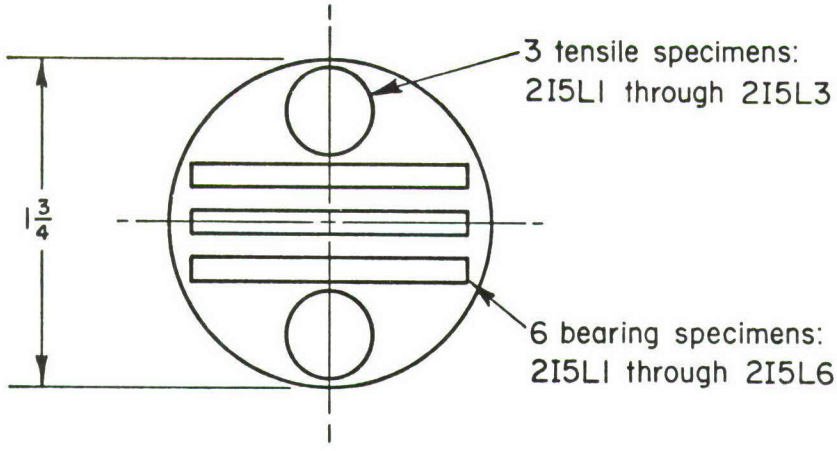

FIGURE 3. LOCATION OF TEST SPECIMENS
FOR 17-4PH BAR -- CODE I

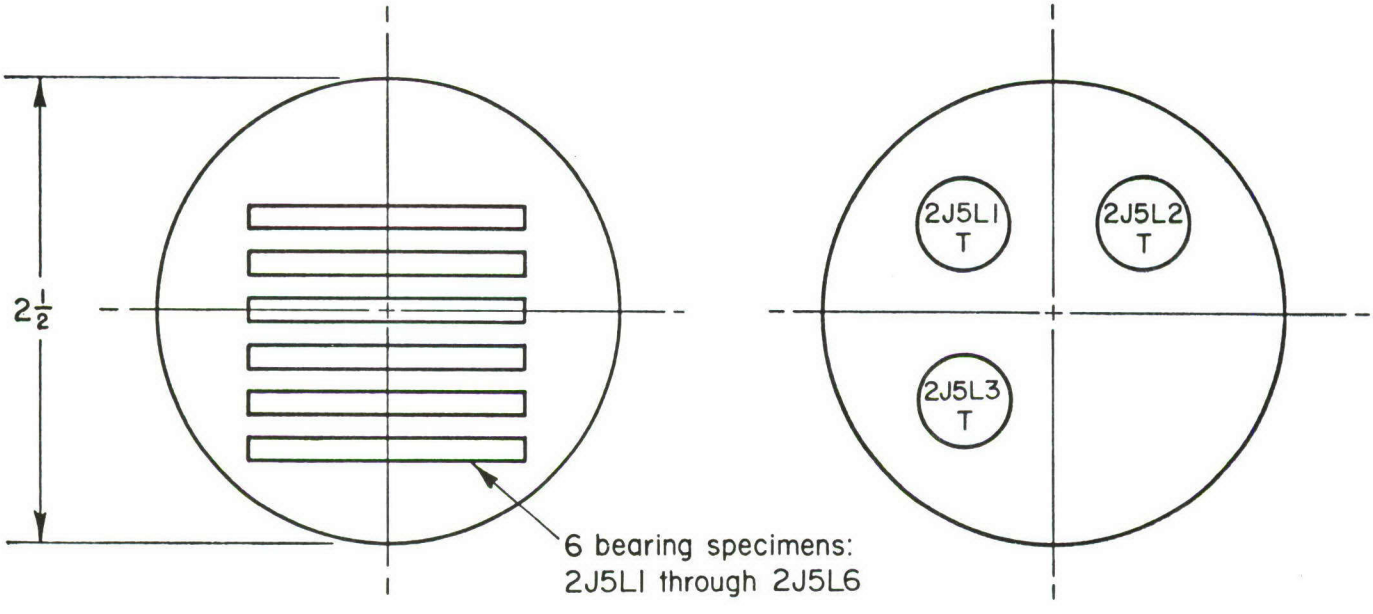

FIGURE 4. LOCATION OF TEST SPECIMENS
FOR 17-4PH BAR -- CODE J

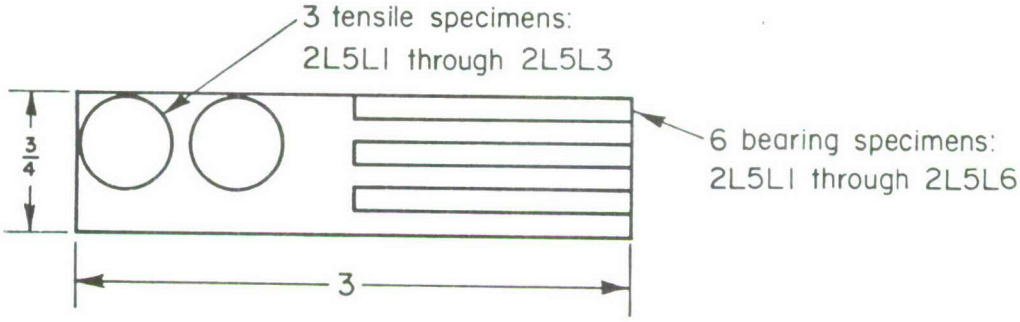

FIGURE 5. LOCATION OF TEST SPECIMENS FOR
17-4PH BAR -- CODE L

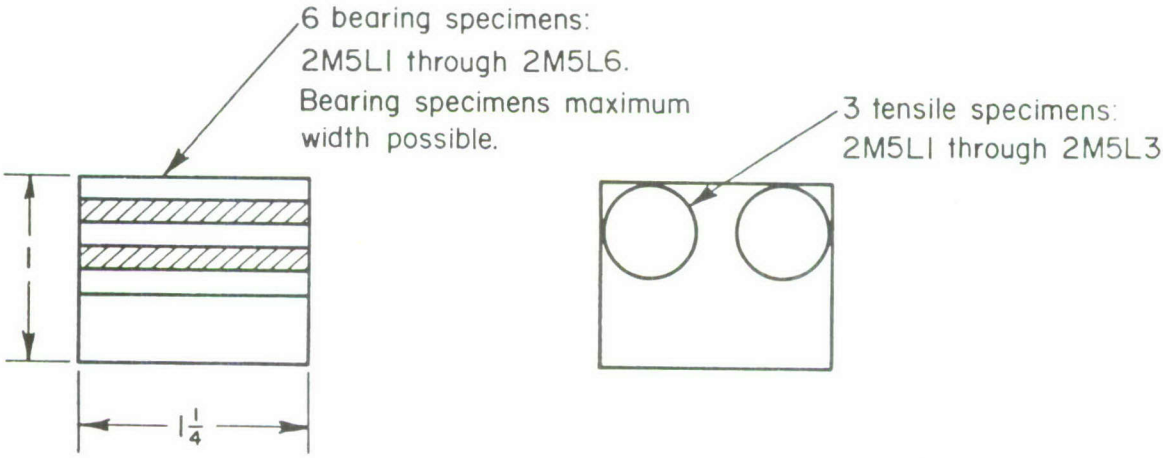

FIGURE 6. LOCATION OF TEST SPECIMENS FOR
17-4PH BAR -- CODE M

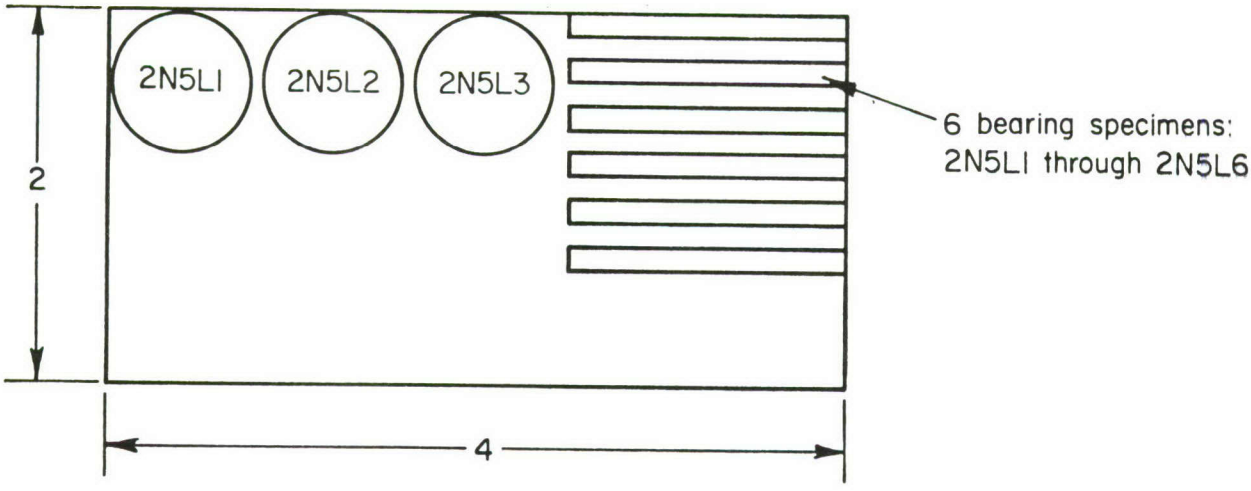

FIGURE 7. LOCATION OF TEST SPECIMENS FOR 17-4PH BAR -- CODE N

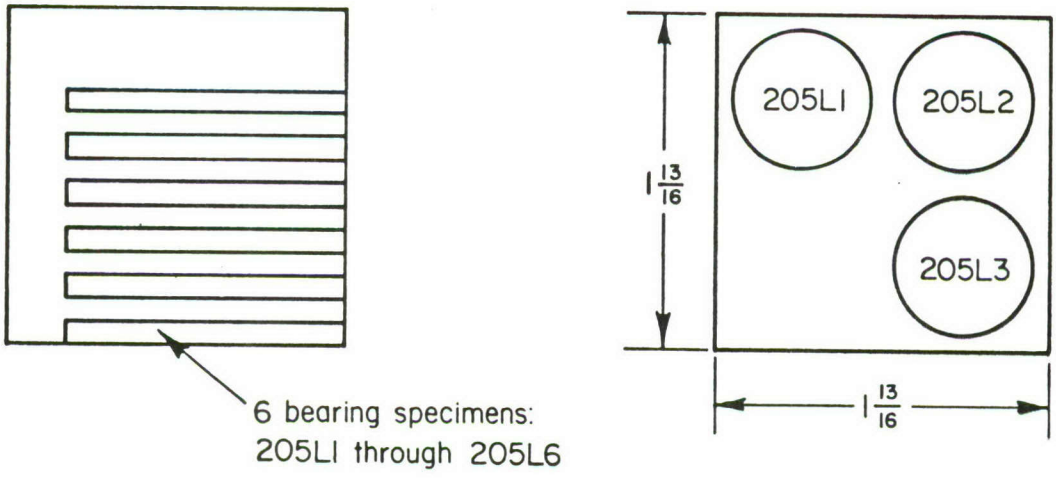

FIGURE 8. LOCATION OF TEST SPECIMENS FOR 17-4PH BAR -- CODE O

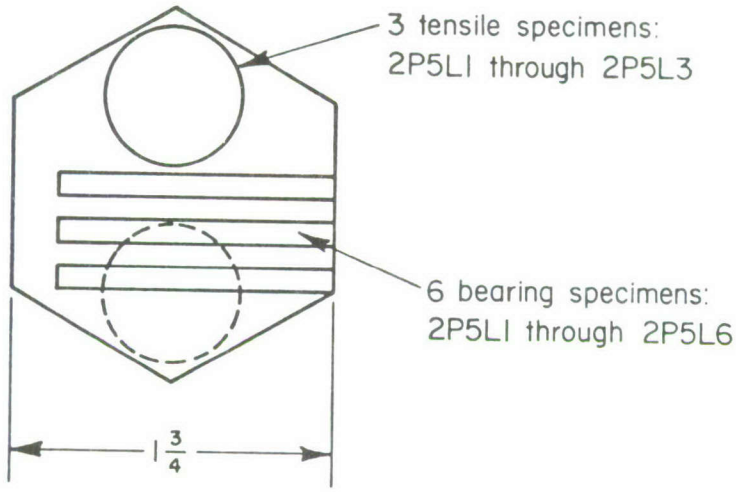

FIGURE 9. LOCATION OF TEST SPECIMENS FOR 17-4PH BAR -- CODE P

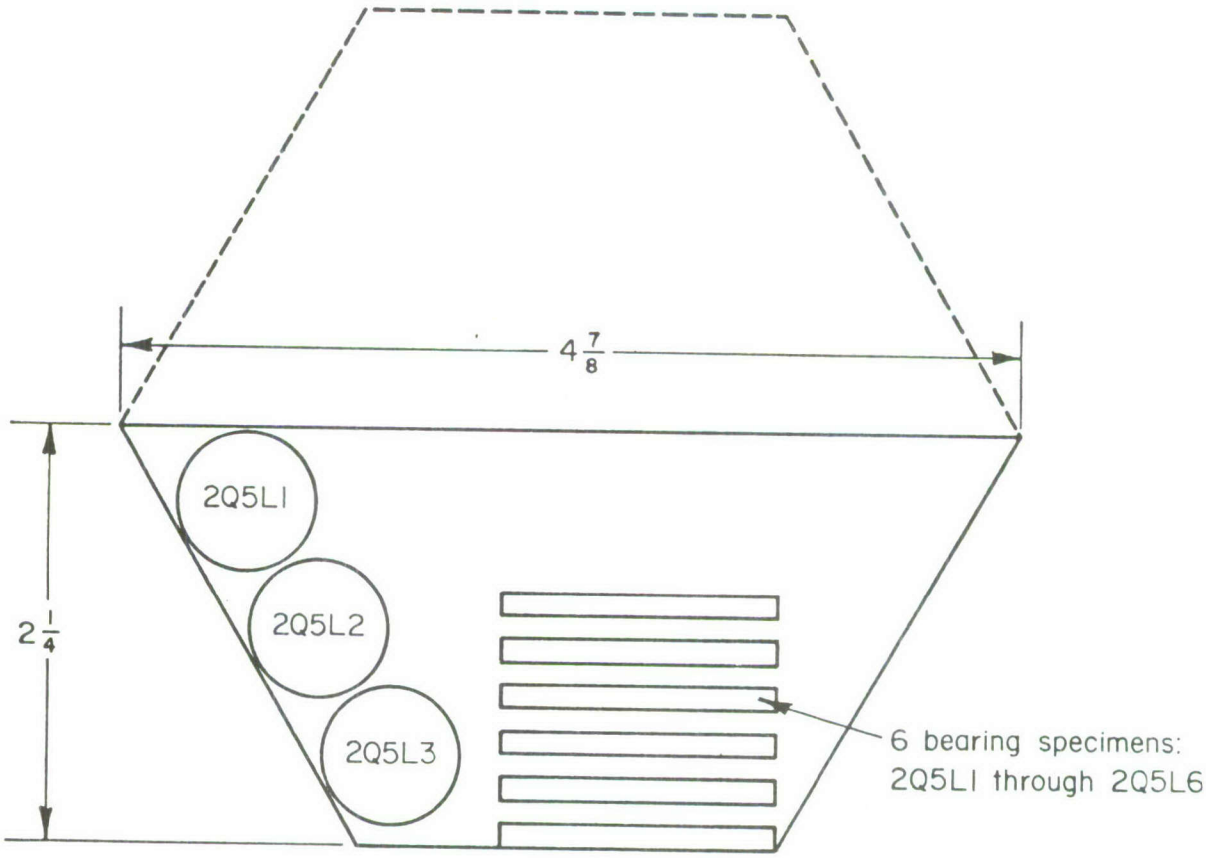

FIGURE 10. LOCATION OF TEST SPECIMENS FOR 17-4PH BAR -- CODE Q

TABLE 3. LONGITUDINAL MECHANICAL PROPERTIES OF 17-4PH BAR, CONDITION H1025

Code/ Heat No.	Bar Size	Specimen Identification	Tension						Bearing			
									e/D = 1.5		e/D = 2.0	
			TUS, ksi	TYS, ksi	e, Percent in 4D	RA, percent	E, 10^3 ksi	n	BUS, ksi	BYS, ksi	BUS, ksi	BYS, ksi
H 336009	1 3/16 inches round	2H6L1	163.9	160.2	18.0	62.5	30.6	27	279.0	237.4	348.3	285.2
		2H6L2	164.1	161.8	18.0	61.2	29.9	26	284.5	238.9	348.6	284.4
		2H6L3	164.6	161.6	17.0	62.6	29.9	24	282.5	241.9	349.0	286.9
		Average	164.2	161.2	17.7	62.1	30.1	26	282.0	239.4	348.6	285.5
I 626436	1 3/4 inches round	2I6L1	163.4	159.7	18.0	66.3	28.8	27	273.4	228.8	350.6	280.6
		2I6L2	162.3	159.1	18.0	66.9	27.8	27	277.6	234.3	348.6	275.3
		2I6L3	163.4	160.4	17.0	66.6	29.8	27	274.8	233.6	347.0	281.8
		Average	163.0	159.7	17.7	66.6	28.8	27	275.3	232.2	348.7	279.2
J 626692	2 1/2 inches round	2J6L1	160.1	157.6	18.0	66.7	28.7	27	272.3	228.8	345.1	269.6
		2J6L2	159.1	155.8	18.0	66.0	27.3	27	272.3	231.1	346.6	267.4
		2J6L3	160.7	157.6	17.0	66.4	30.3	21	272.8	230.4	346.2	265.4
		Average	160.0	156.9	17.7	66.4	28.8	25	272.5	230.1	346.0	267.5
K 636003	1 5/16 inches round	2K6L1	166.2	163.5	16.0	63.7	30.9	28	282.3	239.6	355.4	287.5
		2K6L2	165.1	162.9	18.0	64.7	27.8	26	283.1	237.6	351.5	280.6
		2K6L3	165.0	162.9	17.0	65.6	28.5	28	283.2	237.7	354.7	286.6
		Average	165.4	163.1	17.0	64.7	29.1	27	282.9	238.3	353.9	284.5
L 626881	3/4 x 3 inches flat	2L6L1	161.7	158.7	17.0	64.4	27.9	27	266.4	226.8	350.2	269.1
		2L6L2	160.2	157.3	17.0	61.9	27.6	25	275.9	228.6	349.4	270.2
		2L6L3	161.0	158.8	16.0	64.7	27.1	24	274.7	227.8	350.8	270.0
		Average	161.0	158.1	16.7	63.7	27.5	25	272.3	227.7	350.1	269.8
M 616501	1 inch square	2M6L1	161.8	155.7	19.0	61.2	28.6	19	275.4	232.3	353.8	273.2
		2M6L2	162.4	156.1	19.0	59.0	30.1	15	273.6	230.0	350.2	265.9
		2M6L3	161.5	155.4	19.0	60.6	30.0	17	274.5	232.7	351.0	280.9
		Average	161.9	155.7	19.0	60.3	29.6	17	274.5	231.7	351.7	273.3
N 626650	2 x 4 inches flat	2N6L1	158.8	157.7	18.0	61.5	28.5	17	274.0	229.7	342.0	276.4
		2N6L2	159.0	155.6	17.5	60.0	30.9	22	273.6	233.9	346.0	271.2
		2N6L3	159.7	157.9	17.0	62.0	29.2	20	273.6	231.5	344.2	---
		Average	159.2	157.1	17.5	61.2	29.5	20	273.7	231.7	344.1	273.8
O 626787	1 13/16 inches square	2O6L1	162.9	161.9	18.0	66.3	27.1	30	270.1	228.5	346.9	281.8
		2O6L2	161.6	161.0	18.0	67.0	30.3	30	275.4	234.1	347.8	275.3
		2O6L3	160.9	160.3	18.0	64.7	27.3	30	275.6	233.9	347.8	275.7
		Average	161.8	161.1	18.0	66.0	28.2	30	273.7	232.2	347.5	277.6
P 60086	1 3/16 inches hexagonal	2P6L1	158.8	149.8	18.0	60.0	28.0	29	276.5	235.0	348.2	270.3
		2P6L2	157.3	154.6	18.0	59.9	28.7	20	273.6	229.2	345.8	273.5
		2P6L3	159.4	151.0	18.0	61.0	29.3	24	275.9	231.8	343.8	271.8
		Average	158.5	151.8	18.0	60.3	28.7	24	275.3	232.0	345.9	271.9
Q 620402	4 1/2 inches hexagonal	2Q6L1	158.3	150.7	18.0	60.0	31.0	30	269.4	223.4	343.0	265.7
		2Q6L2	158.9	150.5	18.0	63.0	29.3	30	272.5	226.2	341.7	262.2
		2Q6L3	157.6	149.3	18.0	61.0	28.5	30	270.0	224.5	344.7	271.0
		Average	158.3	150.2	18.0	61.3	29.6	30	270.6	224.7	343.1	266.3

TABLE 4. LONGITUDINAL MECHANICAL PROPERTIES OF 17-4PH BAR, CONDITION H1150

Code/ Heat No.	Bar Size	Specimen Identification	Tension						Bearing			
									e/D = 1.5		e/D = 2.0	
			TUS, ksi	TYS, ksi	e, Percent in 4D	RA, percent	E, 10^3 ksi	n	BUS, ksi	BYS, ksi	BUS, ksi	BYS, ksi
H 336009	1 3/16 inches round	2H5L1	146.4	129.2	21.0	64.7	26.3	13	252.3	205.9	315.0	251.7
		2H5L2	146.0	130.5	21.0	63.4	29.5	15	252.1	204.0	312.6	250.3
		2H5L3	146.1	130.1	21.0	64.6	29.3	15	--	--	312.9	250.9
		Average	146.2	129.9	21.0	64.2	28.4	14	252.2	205.0	313.5	251.0
I 626436	1 3/4 inches round	2I5L1	147.3	138.6	21.0	68.8	26.4	21	243.0	195.9	317.2	247.8
		2I5L2	144.1	134.2	20.0	66.9	26.1	22	252.0	207.2	314.9	239.7
		2I5L3	147.3	139.3	20.0	68.7	26.3	18	246.2	201.0	316.6	242.3
		Average	146.2	137.4	20.3	68.1	26.3	20	247.1	201.4	316.2	243.3
J 626692	2 1/2 inches round	2J5L1	139.2	125.4	22.0	68.9	27.0	16	236.6	188.0	301.6	219.4
		2J5L2	137.8	123.7	23.0	69.5	28.5	16	233.3	187.8	306.2	225.1
		2J5L3	138.0	124.3	22.0	67.5	27.8	12	233.7	184.2	299.1	219.0
		Average	138.3	124.5	22.3	68.6	27.8	15	234.5	186.7	302.3	221.2
K 636003	1 5/16 inches round	2K5L1	144.2	131.5	23.0	68.2	28.4	18	251.0	203.8	313.1	243.7
		2K5L2	143.9	131.4	22.0	66.9	26.1	17	249.7	204.5	312.1	247.1
		2K5L3	144.1	131.5	22.0	67.4	28.1	15	251.5	201.7	315.7	240.1
		Average	144.1	131.5	22.3	67.5	27.5	17	250.7	203.3	313.6	243.6
L 626881	3/4 x 3 inches flat	2L5L1	141.0	124.3	22.0	66.4	27.4	16	240.0	192.3	310.0	229.9
		2L5L2	140.7	124.4	22.0	64.6	27.2	13	245.0	199.0	314.5	230.8
		2L5L3	142.4	127.7	22.0	66.4	27.3	13	241.8	195.2	315.2	233.0
		Average	141.3	125.5	22.0	65.8	27.3	14	242.2	195.5	313.2	231.2
M 616501	1 inch square	2M5L1	147.0	125.1	22.0	63.3	26.9	11	245.0	195.2	314.7	238.3
		2M5L2	146.4	125.7	21.0	63.3	26.6	11	246.5	194.7	314.3	235.7
		2M5L3	146.0	124.5	22.0	64.4	26.7	11	249.7	199.4	315.8	241.6
		Average	146.5	125.1	21.7	63.7	26.7	11	247.1	196.4	314.9	238.5
N 626650	2 x 4 inches flat	2N5L1	139.6	121.2	22.0	65.0	26.6	12	239.9	190.3	308.5	238.9
		2N5L2	138.7	119.1	21.0	63.0	29.3	9	238.3	188.6	304.2	234.1
		2N5L3	140.4	120.4	22.0	65.0	31.5	12	239.5	190.0	307.0	232.9
		Average	139.6	120.2	21.7	64.3	29.1	11	239.2	189.6	306.6	235.3
O 626787	1 13/16 inches round	2O5L1	142.5	122.9	23.0	68.6	26.8	15	244.6	194.1	304.4	220.9
		2O5L2	141.3	122.1	24.0	69.6	26.5	9	240.1	189.7	300.8	218.8
		2O5L3	141.9	122.9	24.0	69.1	26.7	11	243.6	194.5	307.5	222.4
		Average	141.9	122.6	23.7	69.1	26.7	12	242.8	192.8	304.2	220.7
P 600086	1 3/4 inches hexagonal	2P5L1	139.8	118.3	23.0	64.0	26.2	9	242.8	190.9	307.1	226.8
		2P5L2	140.1	117.9	23.0	64.0	26.6	9	242.7	191.4	310.2	223.8
		2P5L3	139.4	118.5	22.5	64.0	26.6	9	245.0	195.0	305.9	219.3
		Average	139.8	118.2	22.8	64.0	26.5	9	243.5	192.4	307.7	223.3
Q 620402	4 1/2 inches hexagonal	2Q5L1	138.1	126.3	22.0	67.9	28.3	20	246.2	198.4	302.9	227.1
		2Q5L2	141.4	129.6	22.0	65.0	28.6	17	245.3	197.2	313.8	243.0
		2Q5L3	142.4	129.6	22.5	65.0	28.3	19	244.7	194.4	296.5	219.4
		Average	140.6	128.5	22.2	66.0	28.4	19	245.4	196.7	304.4	229.8

Likewise, individual CYS and BYS measurements are paired with TYS measurements for which F_{ty} has been established.

Room temperature bearing yield and ultimate strength reduced ratios were determined using the computational procedure described in Chapter 9, Section 9.2.9.2 of MIL-HDBK-5. The lot average test values for bearing yield strength were paired with the corresponding lot average test values for tensile yield strength. Similarly, the bearing ultimate strength values were paired to the corresponding tensile ultimate strength values. Using the following equation:

$$R = \bar{r} - \frac{t_{0.95}s}{\sqrt{n}}$$

where R = reduced ratio

$\bar{r}$ = average of n ratios

s = standard deviation of the ratios

$t_{0.95}$ = the 0.95 fractile of the t distribution corresponding to n-1 degrees of freedom

n = number of ratios.

A computer program was used to compute the reduced ratios. The results of these computations are shown in Tables 5 through 8.

These reduced ratios were utilized to establish design allowable values for the "bearing" properties as follows:

$$F_{bru}\ (L) = R \times F_{tu}\ (L),\ \text{A or S basis}$$

$$F_{bru}\ (L)\ (e/D = 1.5)_{H1025} = 1.697 \times 155 = 263$$

$$F_{bru}\ (L)\ (e/D = 2.0)_{H1025} = 2.146 \times 155 = 332$$

$$F_{bry}\ (L) = R \times F_{ty}\ (L),\ \text{A or S basis}$$

$$F_{bry}\ (L)\ (e/D = 1.5)_{H1025} = 1.458 \times 145 = 211$$

TABLE 5. DETERMINATION OF BYS/TYS REDUCED RATIOS FOR 17-4PH BAR H1025 CONDITION

IDENTIFICATION	TYS(L)	e/D = 1.5 $\frac{BYS(L)}{TYS(L)}$x100	e/D = 2.0 $\frac{BYS(L)}{TYS(L)}$x100
HT.NO.336009 (H) LONGITUDINAL	161.2	148.5	177.1
HT.NO.626436 (I) LONGITUDINAL	159.7	145.4	174.8
HT.NO.626632 (J) LONGITUDINAL	156.9	146.7	170.5
HT.NO.636003 (K) LONGITUDINAL	163.1	146.1	174.4
HT.NO.626381 (L) LONGITUDINAL	158.1	144.0	170.7
HT.NO.616501 (M) LONGITUDINAL	155.7	148.8	175.5
HT.NO.626650 (N) LONGITUDINAL	157.1	147.5	174.3
HT.NO.626737 (O) LONGITUDINAL	161.1	144.1	172.3
HT.NO.600086 (P) LONGITUDINAL	151.8	152.8	179.1
HT.NO.620402 (Q) LONGITUDINAL	150.2	149.6	177.3
NUMBER R		10	10
AVG R		147.4	174.6
SUM R		1473.6	1746.1
SUMSQ R		217202.9	304943.7
SDEV R		2.7056	2.8424
SDEV RBAR		0.8555	0.8989
PERCENT		145.8	172.9

TABLE 6. DETERMINATION OF BUS/TUS REDUCED RATIOS FOR 17-4PH BAR H1025 CONDITION

IDENTIFICATION	TUS(L)	$\frac{BUS(L)}{TUS(L)} \times 100$ e/D = 1.5	$\frac{BUS(L)}{TUS(L)} \times 100$ e/D = 2.0
HT.NO.336009 (H) LONGITUDINAL	164.2	171.7	212.3
HT.NO.626436 (I) LONGITUDINAL	163.0	168.9	213.9
HT.NO.626692 (J) LONGITUDINAL	160.0	170.3	216.2
HT.NO.636003 (K) LONGITUDINAL	165.4	171.0	214.0
HT.NO.626881 (L) LONGITUDINAL	161.0	169.1	217.5
HT.NO.616501 (M) LONGITUDINAL	161.9	169.5	217.2
HT.NO.626650 (N) LONGITUDINAL	159.2	171.9	216.1
HT.NO.626787 (O) LONGITUDINAL	161.8	169.2	214.8
HT.NO.600086 (P) LONGITUDINAL	158.5	173.7	218.2
HT.NO.620402 (Q) LONGITUDINAL	158.3	170.9	216.7
NUMBER R		10	10
AVG R		170.6	215.7
SUM R		1706.4	2157.0
SUMSQ R		291195.6	465305.2
SDEV R		1.5357	1.8851
SDEV RBAR		0.4856	0.5961
PERCENT		169.7	214.6

TABLE 7. DETERMINATION OF BYS/TYS REDUCED RATIOS FOR 17-4PH BAR H1150 CONDITION

IDENTIFICATION	TYS(L)	e/D = 1/5 $\frac{BYS(L)}{TYS(L)} \times 100$	e/D = 2.0 $\frac{BYS(L)}{TYS(L)} \times 100$
HT.NO.336009 (H) LONGITUDINAL	129.9	157.8	193.2
HT.NO.626436 (I) LONGITUDINAL	137.4	146.6	177.1
HT.NO.626692 (J) LONGITUDINAL	124.5	150.0	177.7
HT.NO.636003 (K) LONGITUDINAL	131.5	154.6	185.2
HT.NO.626881 (L) LONGITUDINAL	125.5	155.8	184.2
HT.NO.616501 (M) LONGITUDINAL	125.1	157.0	190.6
HT.NO.625650 (N) LONGITUDINAL	120.2	157.7	195.8
HT.NO.626787 (O) LONGITUDINAL	122.6	157.3	180.0
HT.NO.600086 (P) LONGITUDINAL	118.2	162.8	188.9
HT.NO.620402 (Q) LONGITUDINAL	128.5	153.1	178.8
NUMBER R		10	10
AVG R		155.3	185.2
SUM R		1552.6	1851.6
SUMSQ R		241232.5	343256.9
SDEV R		4.5346	6.7530
SDEV RBAR		1.4340	2.1355
PERCENT		152.6	181.2

TABLE 8. DETERMINATION OF BUS/TUS REDUCED RATIOS FOR 17-4PH BAR H1150 CONDITION

IDENTIFICATION	TUS(L)	$\frac{TUS(L)}{BUS(L)} \times 100$ e/D = 1/5	$\frac{TUS(L)}{BUS(L)} \times 100$ e/D = 2.0
HT.NO.336009 (H) LONGITUDINAL	146.2	172.5	214.4
HT.NO.626436 (I) LONGITUDINAL	146.2	169.0	216.3
HT.NO.626692 (J) LONGITUDINAL	138.3	169.6	218.6
HT.NO.636003 (K) LONGITUDINAL	144.1	174.0	217.6
HT.NO.626881 (L) LONGITUDINAL	141.3	171.4	221.7
HT.NO.616501 (M) LONGITUDINAL	146.5	168.7	214.9
HT.NO.626650 (N) LONGITUDINAL	139.6	171.3	218.6
HT.NO.626787 (O) LONGITUDINAL	141.9	171.1	214.4
HT.NO.600086 (P) LONGITUDINAL	139.8	174.2	220.1
HT.NO.620402 (Q) LONGITUDINAL	140.6	174.5	216.5
NUMBER R		10	10
AVG R		171.6	217.4
SUM R		1716.3	2174.1
SUMSQ R		294609.8	472742.1
SDEV R		2.1476	2.5351
SDEV RBAR		0.6791	0.8017
PERCENT		170.4	215.9

F_{bry} (L) $(e/D = 2.0)_{H1025} = 1.729 \times 145 = 250$

F_{bru} (L) $(e/D = 1.5)_{H1150} = 1.704 \times 125 = 213$

F_{bru} (L) $(e/D = 2.0)_{H1150} = 2.159 \times 125 = 270$

F_{bry} (L) $(e/D = 1.5)_{H1150} = 1.526 \times 100 = 152$

F_{bry} (L) $(e/D = 2.0)_{H1150} = 1.812 \times 100 = 181.$

The F_{tu} and F_{ty} A or S values were obtained from existing MIL-HDBK-5 Table 2.5.8.0(f). The B allowables were computed for the H1150 condition in a similar manner using the F_{tu} and F_{ty} B values of 134 and 115 ksi, respectively from MIL-HDBK-5 Table 2.5.8.0(f). MIL-HDBK-5 Table 2.5.8.0(f) was revised to incorporate the above new design allowables as shown in Table 9.

Discussion—A comparison of the bearing ratios for the H1025 and H1150 conditions as determined in this investigation and the H900 condition as computed from MIL-HDBK-5 Table 2.5.8.0(f) is shown below:

	H900	H1025	H1150
F_{bru}			
(e/D = 1.5)	1.647	1.697	1.704
(e/D = 2.0)	2.00	2.146	2.159
F_{bry}			
(e/D = 1.5)	1.50	1.458	1.526
(e/D = 2.0)	1.647	1.729	1.812.

The ratios for the three heat-treat conditions compare reasonably well, especially the F_{bru} ratios. There appears to be a trend for slightly higher ratios with increasing aging temperature.

Summary—Room temperature F_{bru} and F_{bry} values for the H1025 and H1150 conditions have been established. MIL-HDBK-5 Table 2.5.9.0(f) has been revised as shown in Table 9 to include these data. (Values in the large print represent the new data.)

TABLE 9. PROPOSED MIL-HDBK-5 TABLE 2.5.8.0(f)

TABLE 2.5.8.0(f). *Design Mechanical and Physical Properties of 17-4 PH Stainless Steel*

Alloy	17-4 PH																
Specification	AMS 5643 and MIL-C-24111																
Form	Bars																
Condition	H900		H925		H950		H975	H1000	H1025	H1050	H1075		H1100	H1125	H1150		H1150M
Thickness or diameter, in.	< 8.000																
Basis	A	B	A	B	A	B	S[a]	S[a]	S[a]	S[a]	A	B	S[a]	S[a]	A	B	S[a]
Mechanical properties:																	
F_{tu}, ksi:																	
L	190	195	170	178	164	172	162	158	155	150	143	150	140	137	125	134	115
T	...	...	...	...	...	...	...	...	...	...	...	...	...	...	...	...	
F_{ty}, ksi:																	
L	170	175	155[b]	167	153[c]	165	150	147	145	135	125[d]	143	115	110	100	115	75
T	...	...	...	...	...	...	...	...	...	...	...	...	...	...	...	...	...
F_{cy}, ksi:																	
L	170	175	...	...	...	...	...	...	139	...	...	...	...	...	90	104	...
T	...	...	...	...	...	...	...	...	...	...	...	...	...	...	...	...	...
F_{su}, ksi	123	126	...	...	...	...	...	...	95	...	...	...	...	...	79	85	...
F_{bru}, ksi:																	
(e/D = 1.5)	313	322	...	...	...	...	...	...	263[e]	...	...	...	...	...	213[e]	228[e]	...
(e/D = 2.0)	380	390	...	...	...	...	...	...	332[e]	...	...	...	...	...	270[e]	289[e]	...
F_{bry}, ksi:																	
(e/D = 1.5)	255	262	...	...	...	...	...	...	211[e]	...	...	...	...	...	152[e]	175[e]	...
(e/D = 2.0)	280	288	...	...	...	...	...	...	250[e]	...	...	...	...	...	181[e]	208[e]	...
e, percent:																	
L	5	...	5	...	4	...	11	11	12	13	10	...	14	15	13	...	18
T	...	...	...	...	...	...	...	...	...	...	...	...	...	...	...	...	...
E, 10^3 ksi	28.5																
E_c, 10^3 ksi	30.0																
G, 10^3 ksi	11.2																
μ	0.272																
Physical properties:																	
ω, lb/in.^{3}	0.282 (H9000), 0.283 (H1075), 0.284 (H1150)																
C, K, and α	See Figure 2.5.8.0																

[a]Only H900 condition covered by AMS 5643. Properties for other conditions reflect producers' guaranteed minimum tensile properties. Check MIL-C-24111 for conditions covered and mechanical properties.

[b]The A value of 157 ksi is higher than producers' guaranteed minimum.

[c]The A value of 155 ksi is higher than producers' guaranteed minimum.

[d]The A value of 136 ksi is higher than producers' guaranteed minimum.

[e]Bearing values are "dry pin" values per Section 1.4.7.1.

Alloy 188 Sheet

Background—Alloy 188 is a corrosion and heat-resistant cobalt base alloy exhibiting high strength up to 1800 F and oxidation resistance up to 2100 F. The alloy is covered by AMS 5608 for sheet and plate and AMS 5772 for bars and forgings. Mechanical property data for this alloy in sheet form have been collected by BCL under the MIL-HDBK-5 program and a summary[2] of the data available was presented at the 44th MIL-HDBK-5 Meeting. However, there were insufficient data to meet the guidelines for the incorporation of a new material in MIL-HDBK-5. Due to a recent upsurge in interest in this alloy by the aircraft engine manufacturers, it was desirable to determine design allowables and incorporate this alloy into MIL-HDBK-5. Consequently, testing was required to obtain sufficient data.

Test Plan—As defined in Chapter 1, Section 1.4.1.3 of MIL-HDBK-5, derived values are those room temperature mechanical property values that are established through their relationship to directly calculated values for room temperature F_{tu} and F_{ty}. The guidelines for the presentation of data are described in Chapter 9, Section 9.2.9.1 of MIL-HDBK-5 and require at least ten pairs of measurements, each representing a single lot of material. To establish the shape of elevated temperature curves for the various properties, Section 9.3.1.1.1 of MIL-HDBK-5 requires a sample consisting of at least five lots of material at each of several temperatures.

Table 10 shows the test plan to acquire the necessary data. Room temperature compression and shear data for one heat were available in Reference 3. Consequently, tests were needed for nine additional heats. According to the guidelines, bearing data for at least three heats are required for the incorporation of a new material into MIL-HDBK-5. Therefore, bearing tests were scheduled for three heats with edge distance, e/D = 2.0. Specification AMS 5608 specifies testing in the long transverse grain direction for material greater than 9 inches in width. Consequently, compression, shear, and bearing tests were planned for the long transverse direction. Tensile tests were also scheduled for the longitudinal grain direction in order to determine longitudinal design allowables for F_{tu} and F_{ty}.

---

(2) Item 71-22, "Haynes Alloy No. 188", Status Report (Handout) presented at the 44th MIL-HDBK-5 Meeting, October 1972.

(3) Deel, O. L., and Mindlin, H., "Engineering Data on New Aerospace Structural Materials", AFML-TR-249, Battelle's Columbus Laboratories, December 1971.

TABLE 10. TEST PLAN FOR ALLOY 188 SHEET

Heat Identification	Grain Direction	Room Temperature				Elevated Temperature, 600 F, 1000 F, and 1400 F Compression
		Tensile	Compression	Shear	Bearing e/D = 2.0	
A	L	3				
	LT	3	3[a]	3	3	
B	L	3				
	LT	3	3[a]	3	3	
C	L	3				
	LT	3	3	3	3	
D	L	3				
	LT	3	3	3		2
E	L	3				
	LT	3	3	3		2
F	L	3				
	LT	3	3	3		2
G	L	3				
	LT	3	3	3		
H	L	3				
	LT	3	3	3		
I	L	3				
	LT	3	3	3		
Total		54	27	27	9	18

[a] E_c precision compression modulus determination.

A room temperature precision compressive modulus value was not available for Alloy 188, consequently, room temperature precision modulus determinations were scheduled for two compression specimens prior to testing to determine compression yield strength.

Sufficient elevated temperature tensile data up to 2000 F were available in References 3 through 5 to establish elevated temperature tensile strength curves in accordance with guidelines. Elevated temperature compressive yield data up to 1400 F for two lots (longitudinal and long transverse grain directions for one heat) were available in Reference 3. Therefore, three lots of elevated temperature compressive yield strength tests were scheduled so as to conform to guidelines. Test temperatures were selected to be the same as those used in Reference 3.

Material - Stellite Division, Cabot Corporation, supplied ten heats of solution treated (annealed) sheet at no cost. Nine heats, varying in thickness from 0.034 to 0.817 inch so as to encompass the sheet thickness range, were used in the test program. Chemical composition of the material as reported by Stellite is shown in Table 11. All compositions conformed to the requirements of AMS 5608.

Specimen Preparation - Specimens were excised from the "as received" solution treated sheet at the locations shown in Figures 11 through 13. The configurations of the various test specimens are shown in Figures A-5 through A-8 in Appendix A. Due to the size of available material, tensile specimens with 1-inch gage length were used.

Testing - All specimens were tested in the "as received" solution treated condition. Room temperature, tensile, compression, shear, and bearing as well as elevated temperature compression tests were conducted in accordance with the procedures described in Appendix B. The results of these tests are

---

(4) Unpublished data from J. W. Tackett, Stellite to R. J. Favor, Battelle, dated March 23, 1972. (MIL-HDBK-5 Source M-101).

(5) Rutkosky, F. A., "Evaluation of Candidate Heat Shield Materials for Shuttle Vehicle", Report LR 7765-4024, Rockwell International Space Division, September 1970. (MIL-HDBK-5 Source M-149).

TABLE 11. CHEMICAL COMPOSITIONS OF ALLOY 188 TEST MATERIALS

Material Code	Heat Number	Chemical Analyses (weight, percent)											
		B	C	Cr	Fe	La	Mn	Ni	P	S	Si	W	Co
A	1880-2-1611	<0.001	0.09	22.50	1.90	0.071	0.76	21.40	0.010	0.008	0.35	14.05	bal.
B	1880-4-1681	0.004	0.08	22.68	1.76	0.051	0.72	22.53	0.011	<0.005	0.34	14.26	bal.
C	1880-0-0164	0.002	0.07	21.60	2.12	0.03	0.50	22.00	0.010	0.008	0.22	13.95	bal.
D	1880-4-1674	0.004	0.07	21.94	1.55	0.034	0.75	22.07	0.011	0.005	0.33	14.00	bal.
E	1880-0-0162	0.004	0.09	20.60	2.06	0.04	0.62	22.70	0.010	0.006	0.29	13.45	bal.
F	1880-4-1693	0.004	0.10	22.63	1.64	0.057	0.75	22.42	0.010	0.006	0.35	14.02	bal.
G	1880-3-1662	0.004	0.09	21.72	1.35	0.042	0.71	22.33	0.011	0.005	0.38	13.81	bal.
H	1880-4-1690	0.006	0.10	22.24	1.99	0.039	0.70	22.42	0.011	0.007	0.34	14.04	bal.
I	1880-2-1619	0.006	0.09	22.31	1.58	0.037	0.57	22.28	0.011	0.007	0.28	14.03	bal.
	AMS 5608	0.015	0.05-	20.00-	3.00	0.03-	1.25	20.00-	0.020	0.015	0.20-	13.00-	bal.
		Max.	0.15	24.00	Max.	0.12	Max.	24.00	Max.	Max.	0.50	16.00	

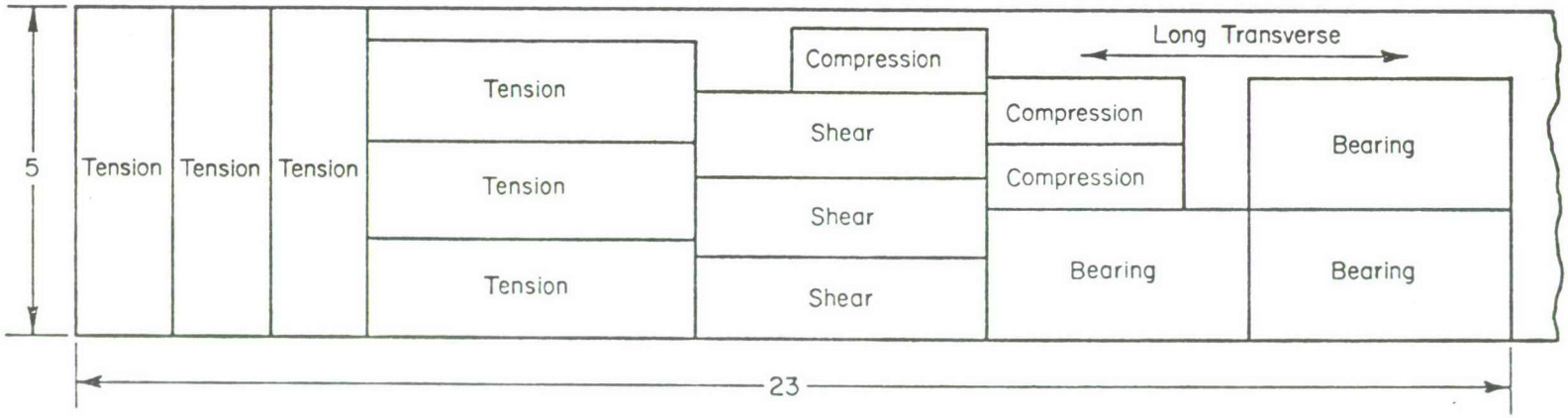

FIGURE 11. LOCATION OF TEST SPECIMENS FOR ALLOY 188 SHEET -- CODES A, B, AND C

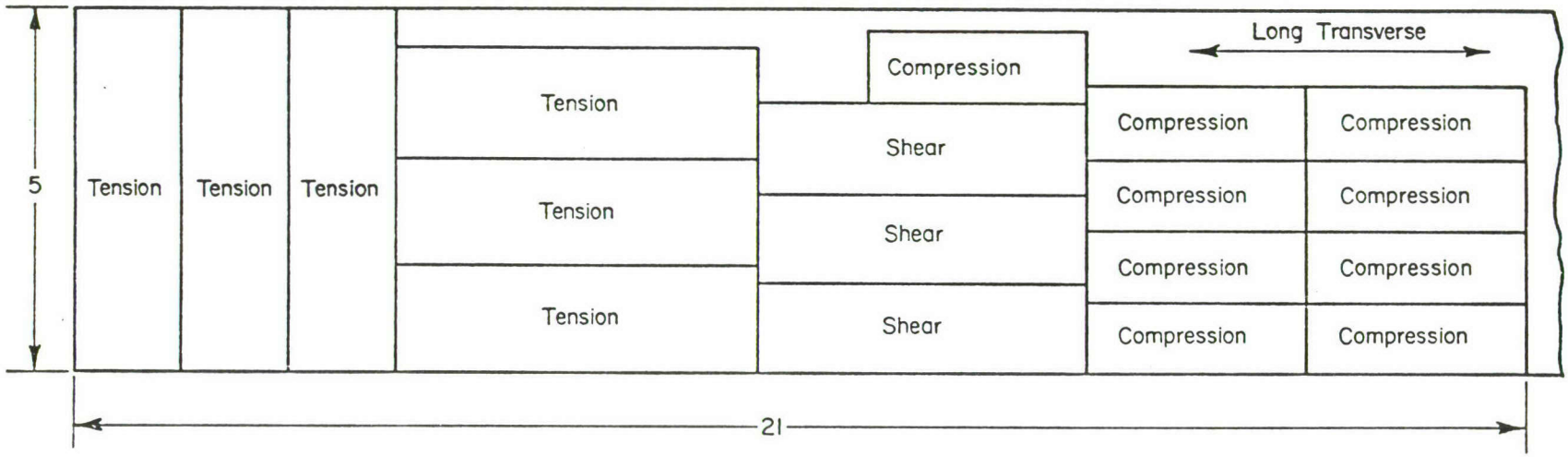

FIGURE 12. LOCATION OF TEST SPECIMENS FOR ALLOY 188 SHEET -- CODES D, E, AND F

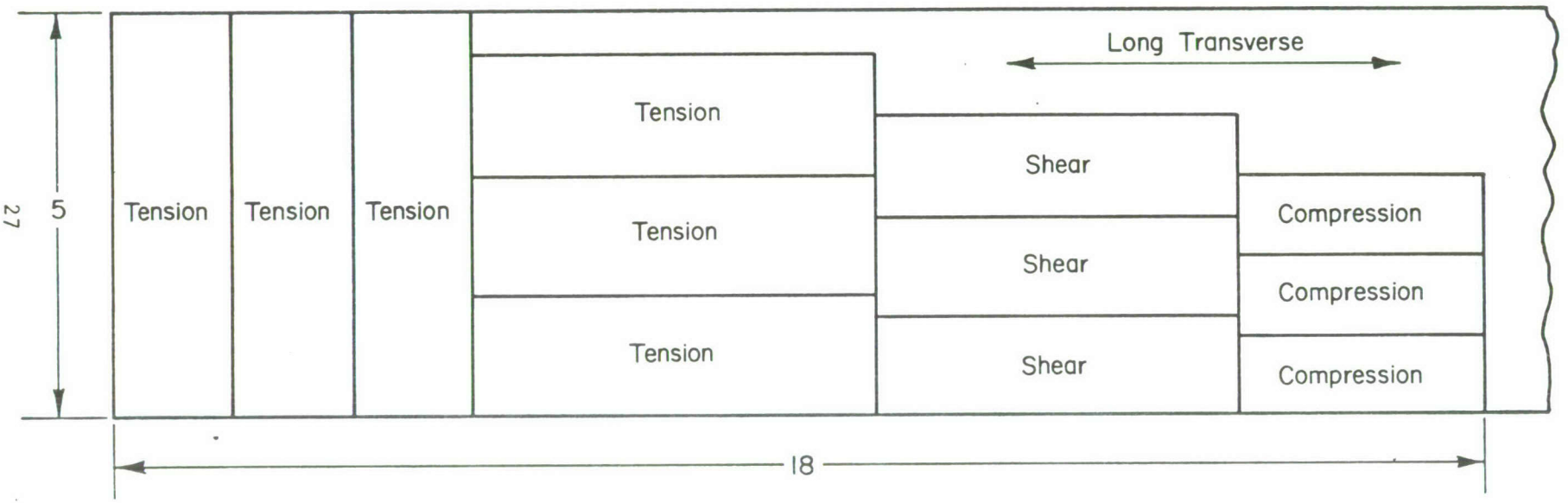

FIGURE 13. LOCATION OF TEST SPECIMENS FOR ALLOY 188 SHEET -- CODES G, H, AND I

shown in Table 12. All heats conformed to the minimum tensile properties specified in AMS 5608. Room temperature compression precision modulus tests were conducted on long transverse compression specimens (Figure A-6, Appendix A) from two different heats as described in Appendix B. The results of these tests as shown in Table 13.

Analysis - As previously indicated, derived values refer to those room temperature mechanical property values that are established through their relationships to directly calculated value for room temperature F_{tu} and F_{ty}. The procedure is applicable to F_{cy}, F_{su}, F_{bru}, and F_{bry} and involves the pairing of heat average SUS and BUS measurements with TUS measurements for which F_{tu} has been established. Likewise, heat average CYS and BYS measurements were paired with TYS measurements for which F_{ty} has been established. Tensile properties in grain directions not covered by specification are also derived in a similar manner.

Using the above relationships reduced ratios for the various "unknown" properties were determined using the computational procedure described in Chapter 9, Section 9.2.9.2 of MIL-HDBK-5. The heat average test values for long transverse compression yield and bearing yield strength were paired with the corresponding heat average test value for long transverse tensile yield strength. Similarly, the long transverse shear and bearing ultimate values were paired to the corresponding long transverse tensile ultimate values. Longitudinal tensile yield and ultimate strength values were paired to corresponding long transverse tensile properties. Using the following equation:

$$R = \bar{r} - \frac{t_{0.95} s}{\sqrt{n}}$$

where R = reduced ratio

$\bar{r}$ = average of n ratios

s = standard deviation of the ratios

$t_{0.95}$ = the 0.95 fractile of the t distribution corresponding to n-1 degrees of freedom

n = number of ratios.

TABLE 12. MECHANICAL PROPERTIES OF ALLOY 188 SHEET

Code/Heat Number	Thickness	Temperature, F	Grain Direction	Specimen Identification	Tension TUS, ksi	Tension TYS, ksi	Tension e, percent in 1 inch	Tension E, 10^3 ksi	Tension n	Compression CYS, ksi	Compression E_c, 10^3 ksi	Compression n	Shear SUS, ksi	Bearing e/D = 2.0 BUS, ksi	Bearing e/D = 2.0 BYS, ksi
A 1880-2-1611	0.034	RT	L	AL 1	141.7	80.8	58.5	32.4	17						
				AL 2	141.3	81.7	58.0	30.2	30						
				AL 3	144.4	80.8	58.0	31.7	30						
				Average	142.5	81.1	58.2	31.4	26						
			LT	AT 1	143.7	71.8	54.0	30.7	9	75.9	31.4	10	125.0	(a)	143.1
				AT 2	141.0	71.9	63.0	33.2	5	74.2	31.2	10	122.2	(a)	142.2
				AT 3	142.1	73.0	60.0	33.5	5	75.4	31.7	11	(b)	(a)	143.3
				Average	142.3	72.2	59.0	32.5	6	75.2	31.4	10	123.6		142.9
B 1880-4-1681	0.089	RT	L	BL 1	136.6	72.1	59.0	31.5	19						
				BL 2	136.6	72.1	60.0	33.6	16						
				BL 3	137.4	72.9	59.5	32.5	16						
				Average	136.9	72.7	59.5	32.5	17						
			LT	BT 1	131.9	66.0	59.5	31.0	6	72.0	32.0	10	122.9	317.5	135.4
				BT 2	135.6	67.0	59.5	31.5	6	70.0	30.6	9	119.6	316.3	134.7
				BT 3	136.1	66.8	60.0	32.6	6	72.0	28.2	11	122.2	316.7	137.0
				Average	134.5	66.6	59.7	31.7	6	71.3	30.3	10	121.6	316.8	135.7
C 1880-0-0164	0.187	RT	L	CL 1	132.7	77.0	69.0	29.5	17						
				CL 2	131.5	71.2	67.0	31.4	17						
				CL 3	132.3	70.4	68.5	33.0	20						
				Average	132.2	72.9	68.2	31.3	18						
			LT	CT 1	132.8	71.8	67.5	31.1	12	70.1	33.6	15	125.6	320.1	143.3
				CT 2	132.8	70.2	66.5	32.5	13	70.7	33.9	16	124.3	320.4	142.1
				CT 3	132.8	70.1	68.0	37.2	13	68.3	32.9	16	125.3	312.7	140.2
				Average	132.8	70.7	67.3	33.6	13	69.7	33.4	16	125.1	317.7	141.9
D 1880-4-1674	0.060	RT	L	DL 1	145.2	67.5	56.0	30.0	17						
				DL 2	145.0	66.7	55.5	30.3	26						
				DL 3	145.7	68.0	56.0	30.8	21						
				Average	145.3	67.4	55.8	30.4	21						
			LT	DT 1	149.0	69.3	55.0	32.0	13	66.7	31.9	19	126.0		
				DT 2	143.8	68.4	55.0	32.5	12	69.1	32.9	22	128.9		
				DT 3	143.7	66.4	57.5	34.0	11	--	--	--	(b)		
				Average	145.5	68.0	55.8	33.8	12	67.9	32.4	21	127.5		
		600	LT	DT 4						50.8	30.6	23			
				DT 5						47.2	33.6	28			
				Average						49.0	32.1	26			
		1000	LT	DT 6						45.5	27.3	22			
				DT 7						46.4	31.3	22			
				Average						45.9	29.3	22			

TABLE 12. (Continued)

Code/Heat Number	Thickness	Temperature, F	Grain Direction	Specimen Identification	Tension TUS, ksi	Tension TYS, ksi	Tension e, percent in 1 inch	Tension E, 10^3 ksi	Tension n	Compression CYS, ksi	Compression E_c, 10^3 ksi	Compression n	Shear SUS, ksi	Bearing e/D = 2.0 BUS, ksi	Bearing e/D = 2.0 BYS, ksi
E 1880-0-0162	0.089	1400	LT	DT 8						39.8	25.6	29			
				DT 9						39.9	27.6	29			
				Average						39.9	26.6	29			
		RT	L	EL 1	137.6	70.6	62.0	30.5	30						
				EL 2	137.5	69.9	61.0	32.7	10						
				EL 3	138.0	70.1	61.5	33.2	21						
				Average	137.7	70.2	61.5	32.1	20						
			LT	ET 1	135.8	61.5	60.5	29.7	6	68.5	31.4	10	125.4		
				ET 2	139.0	62.0	60.0	30.5	5	65.9	30.3	10	123.7		
				ET 3	139.5	64.8	60.0	33.3	5	66.6	32.5	9	122.9		
				Average	138.1	62.8	60.2	31.2	5	67.0	31.4	10	124.0		
		600	LT	ET 4						48.4	29.0	11			
				ET 5						49.0	32.2	11			
				Average						48.7	30.6	11			
		1000	LT	ET 6						44.2	29.0	10			
				ET 7						44.2	29.0	11			
				Average						44.2	29.0	11			
		1400	LT	ET 8						40.3	22.5	11			
				ET 9						40.0	30.1	19			
				Average						40.2	26.3	15			
F 1880-4-1693	0.125	RT	L	FL 1	143.1	74.2	56.5	35.1	30						
				FL 2	143.2	72.5	56.5	30.9	30						
				FL 3	143.2	72.5	56.5	29.2	30						
				Average	143.2	73.1	56.5	31.7	30						
			LT	FT 1	142.4	71.9	56.0	32.9	7	70.8	32.1	11	126.1		
				FT 2	142.4	71.6	56.5	30.5	8	68.2	31.3	13	128.0		
				FT 3	142.7	69.7	56.0	32.5	6	68.7	31.5	11	128.5		
				Average	142.5	71.1	56.2	32.0	7	69.2	31.6	12	127.5		
		600	LT	FT 4						47.4	27.9	12			
				FT 5						49.0	28.5	11			
				Average						48.2	28.2	12			
		1000	LT	FT 6						44.8	(c)	--			
				FT 7						44.7	29.2	15			
				Average						44.8	29.2	15			
		1400	LT	FT 8						40.5	26.4	16			
				FT 9						37.5	24.6	8			
				Average						39.0	25.5	12			

TABLE 12. (Continued)

Code/Heat Number	Thickness	Temperature, F	Grain Direction	Specimen Identification	Tension TUS, ksi	Tension TYS, ksi	Tension e, percent in 1 inch	Tension E, 10^3 ksi	Tension n	Compression CYS, ksi	Compression E_c, 10^3 ksi	Compression n	Shear SUS, ksi	Bearing e/D = 2.0 BUS, ksi	Bearing e/D = 2.0 BYS, ksi
G 1880-3-1662	0.040	RT	L	GL 1	151.9	74.7	54.0	36.2	11						
				GL 2	152.0	73.2	52.5	30.0	10						
				GL 3	153.5	73.5	54.0	32.0	17						
				Average	152.5	73.8	53.5	32.9	13						
			LT	GT 1	150.3	74.2	52.0	32.7	19	74.8	31.7	19	(b)		
				GT 2	148.0	72.0	55.0	29.8	10	74.6	34.0	19	131.6		
				GT 3	148.1	75.8	53.5	30.7	10	--	--	--	129.8		
				Average	148.8	74.0	53.5	31.1	13	74.7	32.8	19	130.7		
H 1880-4-1690	0.120	RT	L	HL 1	144.0	75.6	55.0	31.3	17						
				HL 2	143.6	76.0	55.0	31.5	17						
				HL 3	145.6	75.5	53.0	31.0	17						
				Average	144.4	75.7	54.3	31.3	17						
			LT	HT 1						73.8	31.0	10	(b)		
				HT 2						74.8	32.6	9	127.3		
				HT 3						73.8	31.7	9	126.6		
				Average	135.0[d]	66.5[d]	51.5[d]	--	--	74.1	31.8	9	126.9		
I 1880-2-1619	0.125	RT	L	IL 1	149.0	79.6	55.5	32.5	11						
				IL 2	148.7	79.5	55.5	33.0	8						
				IL 3	147.7	79.0	54.0	29.3	10						
				Average	148.5	79.4	55.0	31.6	10						
			LT	IT 1						75.4	34.3	20	131.4		
				IT 2						75.4	32.9	19	123.9		
				IT 3						74.6	33.8	19	131.5		
				Average	144.0[d]	75.7[d]	48.5[d]	--	--	75.1	33.6	19	128.9		

[a] Specimen buckled.

[b] Did not fail in shear.

[c] Load-strain curve not suitable for modulus.

[d] Supplier certification tests.

TABLE 13. PRECISION COMPRESSIVE MODULUS TEST RESULTS FOR ALLOY 188 SHEET

Code/Heat Number	Thickness, in.	Grain Direction	Specimen Ident.	Stress Interval, psi	Chord Moduli, psi x 10^3 Run 1	Run 2	Run 3	Average
I	0.125	LT	IT-1	0-10	35.9	33.3	34.4	34.5
1880-2-1619				10-17.9	35.9	33.2	33.2	34.1
				Average				34.3
			IT-2	0-10	33.3	34.4	33.3	33.7
				10-17.9	31.7	31.7	32.7	32.0
				Average				32.9
			IT-3	0-10	33.3	34.4	34.4	34.0
				10-17.9	33.0	34.4	33.0	33.5
				Average				33.8
			Heat Average					33.6
C	0.187	LT	CT-1	0-10	35.7	33.3	34.4	34.5
1880-0-0164				10-19.5	32.8	32.6	32.8	32.7
				Average				33.6
			CT-2	0-10	33.3	33.3	33.3	33.3
				10-19.5	34.4	34.5	33.3	34.1
				Average				33.7
			CT-3	0-10	33.3	33.3	33.3	33.3
				10-20	34.5	32.2	31.2	32.6
				Average				32.9
			Heat Average					33.4
				Grand Average				33.5

A computer program was used to compute the reduced ratios. The results of these computations are shown in Tables 14 and 15.

These reduced ratios were utilized to establish design allowable values for "unknown" properties as follows:

$F_{ty}(L) = R \times F_{ty}(LT)$, S basis

$F_{ty}(L) = 1.037 \times 55 = 57$

$F_{tu}(L) = R \times F_{tu}(LT)$, S basis

$F_{tu}(L) = 1.003 \times 125 = 125$

$F_{su}(LT) = R \times F_{su}(LT)$, S basis

$F_{su}(LT) = 0.889 \times 125 = 111$

$F_{cy}(LT) = R \times F_{ty}(LT)$, S basis

$F_{cy}(LT) = 1.005 \times 55 = 55.$

The $F_{tu}(LT)$ and $F_{ty}(LT)$ were AMS 5608 specification minimum values. Since reduced ratios for bearing were based on only three heats, bearing design allowables were not proposed. MIL-HDBK-5 Table 6.4.2.0(b) was prepared with the above design allowables as shown in Table 22.

A room temperature tensile modulus of elasticity value of 33.6×10^3 ksi (determined dynamically) was reported in Reference 6. However, a precision E_c value was not available; consequently, tests were conducted to determine this value. The results of these measurements, shown in Table 13, indicated a static compressive modulus of elasticity of 33.5×10^3 ksi compared to a dynamic tensile modulus of elasticity of 33.6×10^3 ksi as reported in Reference 6. Due to the similarity in values, it was decided to equate the compressive modulus value to the tensile modulus value for the design allowable table.

---

(6) Stellite Division Technical Bulletin F-30.361B, "Haynes Alloy No. 188".

TABLE 14. DETERMINATION OF ULTIMATE STRENGTH RATIOS FOR ANNEALED ALLOY 188 ALLOY SHEET

e/D = 2.0

IDENTIFICATION	TUS(LT)	$\frac{TUS(L)}{TUS(LT)}$ x100	$\frac{SUS(LT)}{TUS(LT)}$ x100	$\frac{BUS(LT)}{TUS(LT)}$ x100
HT.NO.1880-2-1611 (A) LT	140.3	101.6	88.1	-.0
HT.NO.1880-4-1681 (B) LT	134.5	101.8	90.4	235.5
HT.NO.1880-0-0164 (C) LT	132.8	99.5	94.2	239.2
HT.NO.1880-4-1674 (D) LT	145.5	99.9	87.6	-.0
HT.NO.1800-0-0162 (E) LT	138.1	99.7	89.8	-.0
HT.NO.1880-4-1693 (F) LT	142.5	100.5	89.5	-.0
HT.NO.1880-3-1662 (G) LT	148.8	102.5	87.8	-.0
HT.NO.1880-4-1690 (H) LT	135.0	107.0	94.0	-.0
HT.NO.1880-2-1619 (I) LT	144.0	103.1	89.5	-.0
HT.NO.1880-00156 LT REF (3)	145.5	100.3	93.1	-.0
NUMBER R		10	10	2
AVG R		101.6	90.4	.0
SUM R		1015.9	904.0	474.8
SUMSQ R		103247.3	81779.2	112710.6
SDEV R		2.2488	2.4956	.0000
SDEV RBAR		0.7111	0.7892	.0000
PERCENT		100.3	88.9	.0

TABLE 15. DETERMINATION OF YIELD STRENGTH RATIOS FOR ANNEALED ALLOY 188 ALLOY SHEET

e/D = 2.0

IDENTIFICATION	TYS(LT)	$\frac{TYS(L)}{TYS(LT)}$x100	$\frac{CYS(L)}{TYS(LT)}$x100	$\frac{BYS(L)}{TYS(LT)}$x100
HT.NO.1880-2-1611 (A) LT	72.2	112.3	104.2	197.9
HT.NO.1880-4-1681 (B) LT	66.5	109.2	107.1	203.8
HT.NO.1880-0-0164 (C) LT	70.7	103.1	98.6	200.7
HT.NO.1800-4-1674 (D) LT	68.0	99.1	99.9	-.0
HT.NO.1800-0-0162 (E) LT	62.8	111.8	106.7	-.0
HT.NO.1880-4-1693 (F) LT	71.1	102.8	97.3	-.0
HT.NO.1880-3-1662 (G) LT	74.0	99.7	100.9	-.0
HT.NO.1880-4-1690 (H) LT	66.5	113.8	111.4	-.0
HT.NO.1880-2-1619 (I) LT	75.7	104.9	99.2	-.0
HT.NO.1880-0-0156 LT REF (3)	68.8	114.1	107.3	-.0
NUMBER R		10	10	3
AVG R		107.1	103.3	200.8
SUM R		1070.9	1032.5	602.4
SUMSQ R		114979.7	106809.0	120972.3
SDEV R		5.8219	4.7162	2.9166
SDEV RBAR		1.8410	1.4914	1.6839
PERCENT		103.7	100.5	190.2

The effect of elevated temperature on the tensile yield and ultimate strengths, and compressive yield strength was determined in accordance with the guidelines in Section 9.3.1 of MIL-HDBK-5 using the equation:

$$R = \bar{r} - \frac{t_{0.95}s}{\sqrt{n}}$$

where R = reduced ratio

$\bar{r}$ = mean value of the ratio of the elevated temperature property value to the room temperature property value

s = standard deviation of the ratios

$t_{0.95}$ = the 0.95 fractile of the t distribution corresponding to the n-1 degrees of freedom

n = number of ratios in the sample.

A computer program was used to compute the reduced ratios. The results of these computations are shown in Tables 16 through 18. Only four paired elevated temperature ratios were available for compression yield strength because the longitudinal paired ratios for one heat from Reference 3 displayed significantly higher average ratios than the long transverse ratios and these were not included. The average elevated temperature compressive yield strength ratios for the four heats are consistent and appear representative; consequently, the reduced ratios based on four heats were used to prepare an elevated temperature curve. Working curves, Figures 14 through 16, were drawn through 100 percent at room temperature and not higher than the computed reduced ratios (R) shown in Tables 16 through 18 for each temperature. Specification AMS 5608 specifies minimum tensile properties at 1200 F. For tensile ultimate strength the specification elevated temperature value converted to percentage of room temperature value produced a percentage of 62 percent which was the same as the reduced ratio for 1200 F. For tensile yield strength the specification percentage was 65 percent compared to 62 percent for reduced ratio. Since the reduced ratio was lower than the specification ratio, the working curve was drawn through the reduced ratio at 1200 F. Finished curves were prepared in MIL-HDBK-5 format as shown in Figures 23 through 25.

Elevated temperature elongation data were available from References 3 and 4. A working curve showing the effect of temperature on long transverse

TABLE 16. EFFECT OF TEMPERATURE ON TUS OF ANNEALED ALLOY 188 SHEET

IDENTIFICATION		RT AVG	PERCENT R-T AT INDICATED TEMPERATURE 600F	1000F	1200F	1400F	1600F	1800F	2000F
HT.NO.124 0.043 THICK	REF(4)	136.2	82.2	78.2	73.8	67.8	43.8	27.1	14.7
HT.NO.124 0.063 THICK	REF(4)	133.4	83.1	78.1	73.6	67.5	43.2	26.7	14.1
HT.NO.124 0.125 THICK	REF(4)	134.2	86.2	81.4	77.6	70.0	46.4	27.4	15.3
HT.NO.125 0.030 THICK	REF(4)	149.5	77.7	70.5	65.6	61.8	43.5	24.5	13.0
HT.NO.125 0.043 THICK	REF(4)	138.4	83.0	77.7	73.5	66.6	45.8	26.7	14.0
HT.NO.125 0.063 THICK	REF(4)	137.4	84.4	76.9	74.5	67.5	44.2	27.4	-.0
HT.NO.125 0.125 THICK	REF(4)	139.5	85.9	-.0	77.6	69.0	47.2	27.9	14.9
HT.NO.126 0.043 THICK	REF(4)	138.0	87.9	78.0	73.6	67.8	41.4	26.1	-.0
HT.NO.126 0.063 THICK	REF(4)	138.7	84.0	77.6	74.5	66.9	45.2	-.0	-.0
HT.NO.126 0.125 THICK	REF(4)	136.7	85.6	-.0	77.7	70.4	44.8	27.4	15.1
HT.NO.128 0.030 THICK	REF(4)	139.1	-.0	-.0	-.0	-.0	43.0	-.0	13.9
HT.NO.128 0.043 THICK	REF(4)	140.5	86.2	80.9	80.7	-.0	45.4	-.0	-.0
HT.NO.128 0.050 THICK	REF(4)	138.4	-.0	-.0	-.0	-.0	43.4	-.0	-.0
HT.NO.156 0.078 THICK	REF(3)	145.5	87.6	81.1	-.0	48.6	-.0	-.0	-.0
HT.NO.151 0.025 THICK	REF(5)	130.8	-.0	-.0	70.6	58.9	36.8	22.4	-.0
	NUMBER R		12	10	12	12	14	10	8
	AVG R		84.5	78.0	74.5	65.2	43.9	26.4	14.4
	SUM R		1013.6	780.4	894.2	783.0	613.9	263.6	115.1
	SUMSQ R		85709.9	60983.0	66786.4	51510.1	27008.1	6973.5	1660.3
	SDEV R		2.8131	3.1178	3.6702	6.1823	2.5511	1.6891	0.7507
	SDEV RBAR		0.8121	0.9859	1.0595	1.7847	0.6818	0.5341	0.2654
	PERCENT RT		83.0	76.2	72.6	62.0	42.6	25.4	13.9

TABLE 17. EFFECT OF TEMPERATURE ON TYS OF ANNEALED ALLOY 188 SHEET

IDENTIFICATION		RT AVG	PERCENT R-T AT INDICATED TEMPERATURE 600F	1000F	1200F	1400F	1600F	1800F	2000F
HT.NO.124 0.043 THICK	REF (4)	63.9	70.9	63.8	62.9	61.3	56.8	33.8	18.0
HT.NO.124 0.063 THICK	REF (4)	66.8	71.9	68.7	66.6	65.3	51.5	33.1	16.0
HT.NO.124 0.125 THICK	REF (4)	66.0	68.6	68.6	61.8	58.3	59.1	35.2	18.5
HT.NO.125 0.030 THICK	REF (4)	77.0	68.6	63.9	61.6	60.5	48.3	31.6	15.8
HT.NO.125 0.043 THICK	REF (4)	68.0	69.7	62.8	63.4	61.0	56.0	35.6	17.5
HT.NO.125 0.063 THICK	REF (4)	67.2	67.4	62.5	60.9	58.3	56.5	36.8	-.0
HT.NO.125 0.125 THICK	REF (4)	69.5	70.6	-.0	65.3	64.3	60.9	37.4	18.3
HT.NO.126 0.043 THICK	REF (4)	67.8	75.8	61.1	64.9	61.7	61.7	34.4	-.0
HT.NO.126 0.063 THICK	REF (4)	67.5	77.0	66.5	68.1	64.1	58.8	-.0	-.0
HT.NO.126 0.125 THICK	REF (4)	67.3	71.3	-.0	66.3	62.0	56.3	36.8	19.6
HT.NO.128 0.030 THICK	REF (4)	67.7	-.0	-.0	-.0	-.0	57.3	-.0	17.3
HT.NO.128 0.043 THICK	REF (4)	72.1	64.1	63.4	63.1	-.0	51.0	-.0	-.0
HT.NO.128 0.050 THICK	REF (4)	68.4	-.0	-.0	-.0	-.0	55.7	-.0	-.0
HT.NO.156 0.078 THICK	REF (3)	68.8	71.2	66.4	-.0	64.2	-.0	-.0	-.0
HT.NO.151 0.025 THICK	REF (5)	64.5	-.0	-.0	58.6	54.3	50.2	29.1	-.0
	NUMBER R		12	10	12	12	14	10	8
	AVG R		70.6	64.8	63.6	61.3	55.7	34.4	17.6
	SUM R		847.2	647.8	763.5	735.4	780.2	343.7	141.0
	SUMSQ R		59943.5	42024.3	48559.8	45179.8	43693.3	11874.3	2496.7
	SDEV R		3.4726	2.6378	2.7322	3.1622	4.0398	2.5892	1.2615
	SDEV RBAR		1.0025	0.8342	0.7887	0.9128	1.0797	0.8188	0.4460
	PERCENT RT		68.8	63.2	62.2	59.6	53.8	32.8	16.8

TABLE 18. EFFECT OF TEMPERATURE ON CYS OF ANNEALED ALLOY 188 SHEET

IDENTIFICATION	RT AVG	PERCENT R-T AT INDICATED TEMPERATURE 600F	1000F	1400F
HT.NO.1800-4-1674 (D) LT	67.9	72.2	67.6	58.8
HT.NO.1800-0-0162 (E) LT	67.0	72.7	66.0	60.0
HT.NO.1880-4-1693 (F) LT	69.2	69.7	64.7	56.4
HT.NO.1880-0-0156 LT REF(3)	73.8	73.4	67.1	62.6
NUMBER R		4	4	4
AVG R		72.0	66.3	59.4
SUM R		287.9	265.4	237.7
SUMSQ R		20736.4	17611.8	14148.3
SDEV R		1.6415	1.2676	2.5990
SDEV RBAR		0.8208	0.6338	1.2995
PERCENT RT		69.6	64.5	55.6

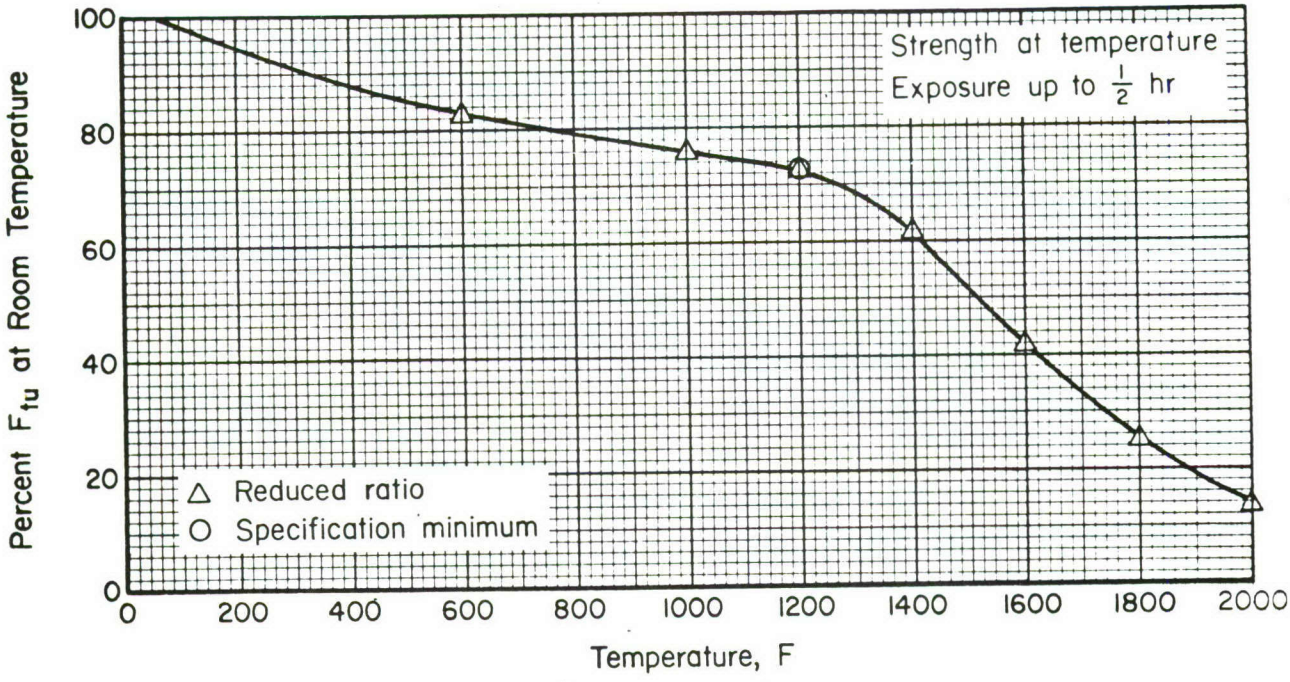

FIGURE 14. WORKING CURVE SHOWING EFFECT OF TEMPERATURE ON THE TENSILE ULTIMATE STRENGTH OF ALLOY 188 SHEET

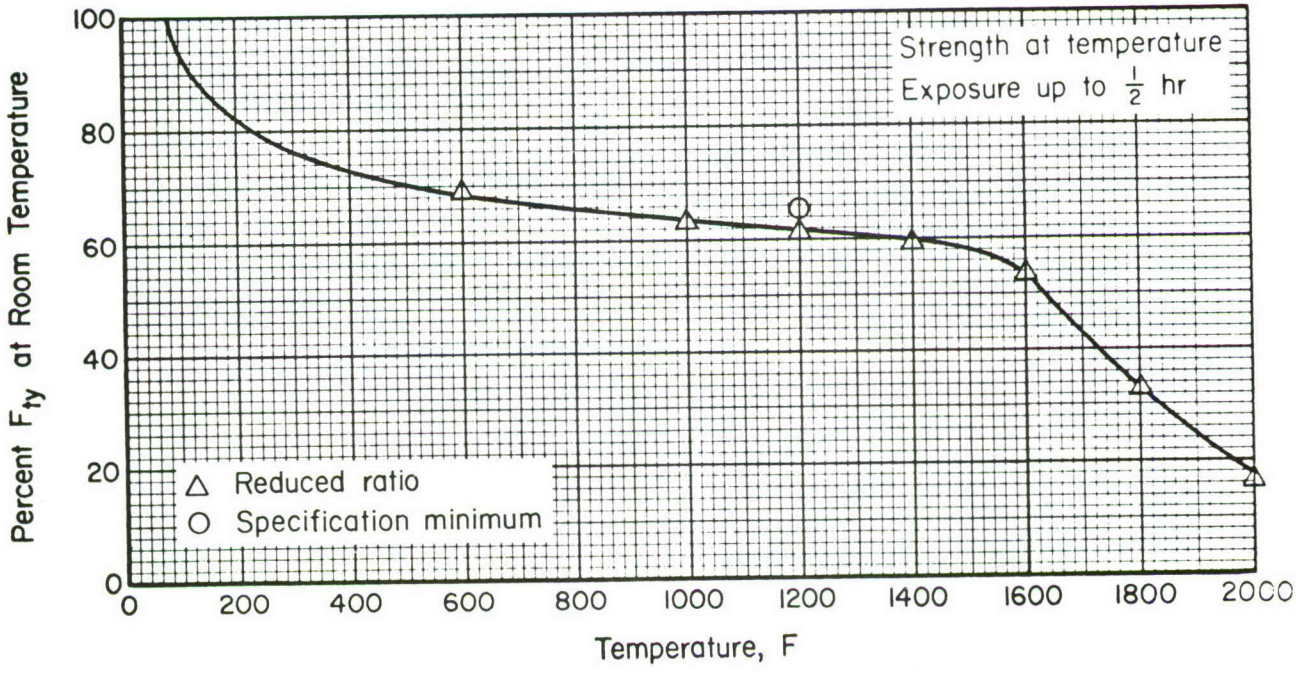

FIGURE 15. WORKING CURVE SHOWING EFFECT OF TEMPERATURE ON THE TENSILE YIELD STRENGTH OF ALLOY 188 SHEET

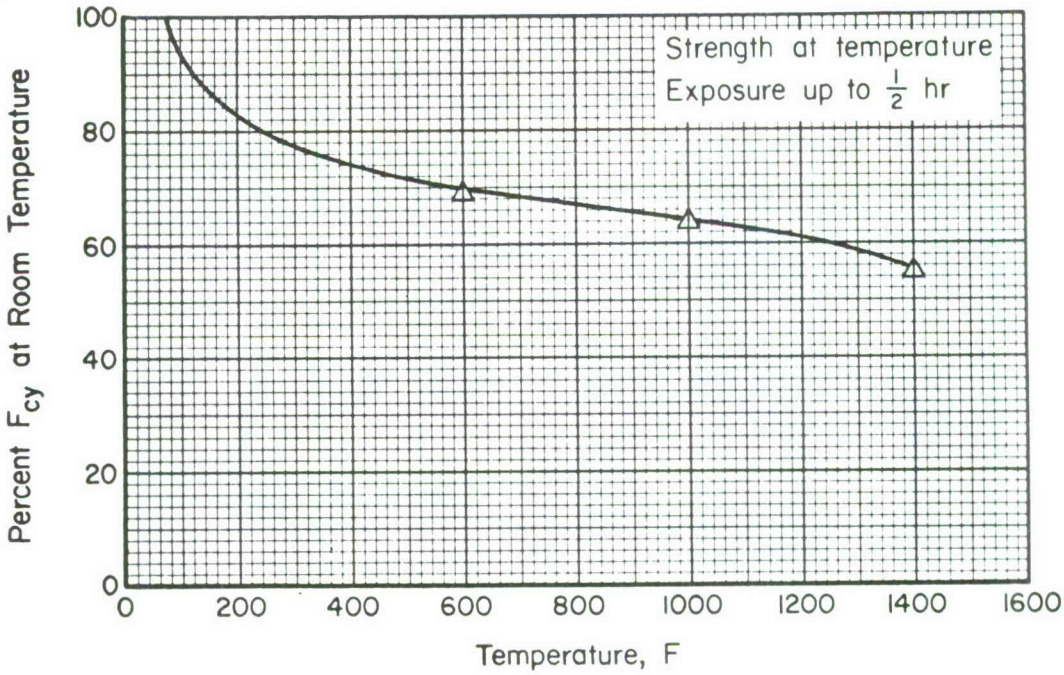

FIGURE 16. WORKING CURVE SHOWING EFFECT OF TEMPERATURE ON THE COMPRESSIVE YIELD STRENGTH OF ALLOY 188 SHEET

elongation is presented in Figure 17. This curve prepared in MIL-HDBK-5 format is shown in Figure 28.

Elevated and cryogenic dynamic modulus of elasticity data were available in Reference 6. A working curve showing the effect of temperature on the dynamic modulus of elasticity is shown in Figure 18. For comparison static compressive modulus data from Table 12 as well as static tension and compression modulus data from Reference 3 are plotted in the same graph. Since the dynamic modulus data covered a wider temperature range than the static data, the dynamic modulus curve was prepared in MIL-HDBK-5 format as shown in Figure 26. A MIL-HDBK-5 standard note concerning the difference in dynamic and static moduli of elasticity at elevated temperatures has been incorporated in the graph.

Room and elevated temperature data for Poisson's ratio were available in Reference 7. A working curve showing the effect of temperature on Poisson's ratio is shown in Figure 19. The finished curve in MIL-HDBK-5 format is presented in Figure 27. The modulus of rigidity, G, was calculated from the tensile modulus of elasticity and Poisson's ratio and is shown in Table 22.

In order to determine typical room temperature tensile and compressive stress-strain curves, the load-strain curves obtained from tensile and compression tests were used to determine the Ramberg-Osgood shape parameter, n, using the graphical procedure described in Chapter 9, Section 9.3.2.4 of MIL-HDBK-5. The Ramberg-Osgood parameter, n, for each tensile and compression test is shown in Table 11. Using the Ramberg-Osgood equation,

$$e_{total} = e_{total} + e_{plastic}$$

$$e_{total} = \frac{f}{E} + kf^n$$

where e_{total} = total strain

f = stress

k = constant

E = modulus of elasticity

n = Ramberg-Osgood parameter,

---

(7) Unpublished data from J. Tackett, Stellite Division (MIL-HDBK-5 Source M-357).

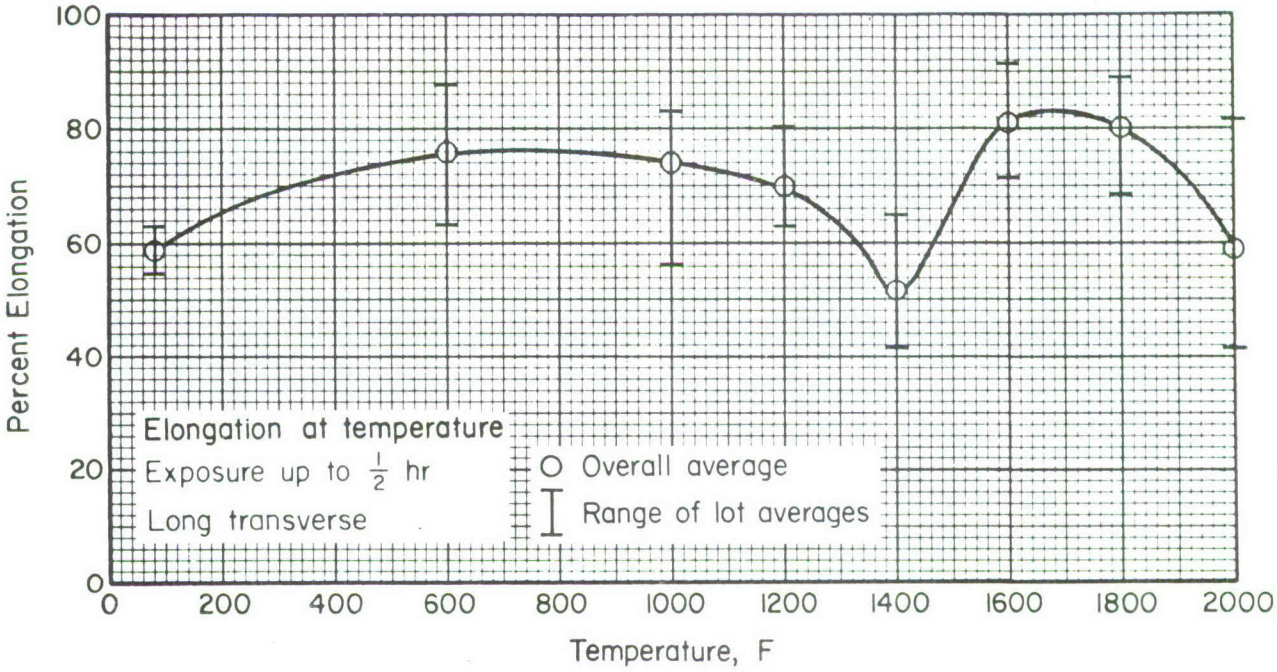

FIGURE 17. WORKING CURVE SHOWING EFFECT OF TEMPERATURE ON THE ELONGATION OF ALLOY 188 SHEET

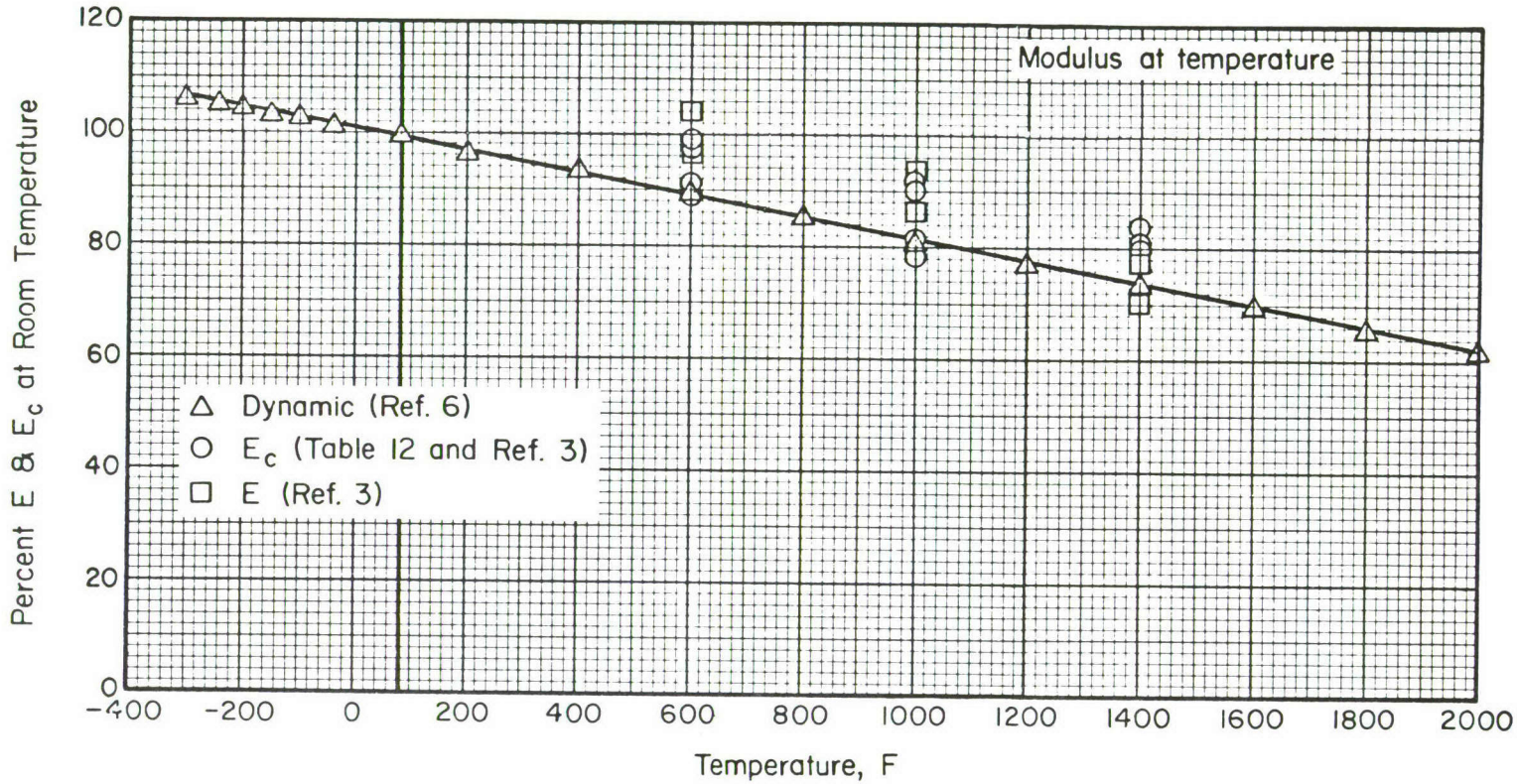

FIGURE 18. WORKING CURVE SHOWING EFFECT OF TEMPERATURE ON MODULUS OF ELASTICITY FOR ALLOY 188

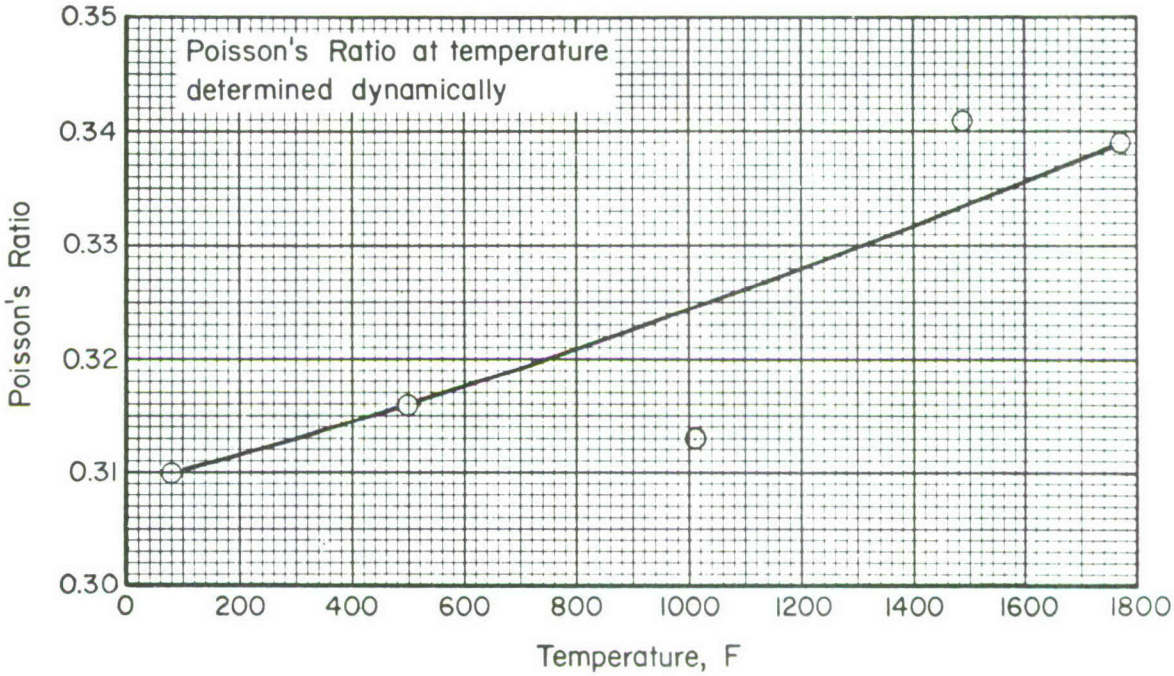

FIGURE 19. WORKING CURVE SHOWING EFFECT OF TEMPERATURE ON POISSON'S RATIO (μ) FOR ALLOY 188

since

$$e_{plastic} = kf^n$$

$$k = \frac{e_{plastic}}{f^n} = \frac{0.002}{TYS^n}$$

substituting

$$e_{total} = \frac{f}{E} + \frac{0.002f^n}{TYS^n}$$

A computer program was utilized to plot typical stress-strain curves using typical values for E or E_c, n, and TYS or CYS. According to Section 9.3.2.2 of MIL-HDBK-5, three lots of stress-strain curves are required to establish typical curves.

For room temperature tensile stress-strain curves, the Ramberg-Osgood parameters were determined from the tensile tests shown in Table 12 and from those in Reference 3. The individual heat average values and overall average n values are shown in Table 19. The typical yield strengths were determined from the grand average of the yield strengths of the heats listed in Table 19. The room temperature tensile modulus of elasticity as published in Reference 6 is 33.6×10^3 psi. A summary of the parameters used to construct room temperature tensile stress-strain curves as listed below:

Grain Direction	E	TYS	n
L	33.6	74	19
LT	33.6	69	8.4

Typical room temperature tensile stress-strain curves are shown in Figure 29. Elevated temperature tensile stress-strain curves were available for only one heat, Reference 3, which was insufficient quantity to meet guidelines for inclusion.

For compressive stress-strain and compressive tangent-modulus curves, the Ramberg-Osgood parameters were determined from compression tests shown in Table 12 and as from those in Reference 3. The heat average values and overall average n values are shown in Table 20. The typical room temperature compressive yield strength was determined from the grand average of the yield strengths of the heats listed in Table 20.

TABLE 19. DETERMINATION OF RAMBERG-OSGOOD PARAMETERS FOR ROOM TEMPERATURE TENSILE STRESS-STRAIN CURVES FOR ALLOY 188 SHEET

Heat Number	Thickness, inches	Ref	n	
			L	LT
1880-2-1611	0.034	-	26	6
1880-4-1681	0.089	-	17	6
1880-0-0164	0.187	-	18	13
1880-4-1674	0.060	-	21	12
1880-0-0162	0.089	-	20	5
1880-4-1693	0.125	-	30	7
1880-3-1662	0.040	-	13	13
1880-4-1690	0.120	-	17	-
1880-2-1619	0.125	-	10	-
1880-0-0156	0.078	(3)	16	5
Average			19	8.4

TABLE 20. DETERMINATION OF RAMBERG-OSGOOD PARAMETERS FOR LONG TRANSVERSE COMPRESSIVE STRESS-STRAIN CURVES FOR ALLOY 188 SHEET

Heat Number	Thickness, Inches	Ref	n			
			RT	600 F	1000 F	1400 F
1880-2-1611	0.034	-	10	-	-	-
1880-4-1681	0.089	-	10	-	-	-
1880-0-0164	0.187	-	16	-	-	-
1880-4-1674	0.060	-	21	22	22	29
1880-0-0162	0.040	-	10	11	11	15
1880-4-1693	0.125	-	12	12	15	12
1880-3-1662	0.040	-	19	-	-	-
1880-4-1690	0.120	-	9	-	-	-
1880-2-1619	0.125	-	19	-	-	-
1880-0-0156	0.078	(3)	5	6	12	16
Average			13	13	15	18

The elevated temperature typical compressive yield strengths were determined by multiplying the room temperature typical yield strength by the percentage indicated by the elevated temperature compressive yield strength curve, Figure 25. The room temperature compressive modulus of elasticity as established in this test program, Table 22, was 33.6 x 10^6 psi. The elevated temperature compressive moduli were obtained by multiplying the room temperature value by the percentage indicated by the elevated temperature dynamic modulus curve, Figure 26. A summary of the parameters used to construct the compressive stress-strain and compressive tangent modulus curves is shown in Table 21.

TABLE 21. PARAMETERS FOR CONSTRUCTION OF TYPICAL LONG TRANSVERSE COMPRESSIVE STRESS-STRAIN AND TANGENT MODULUS CURVES FOR ALLOY 188

Test Temperature F	Compressive Yield Strength, ksi	Ramberg-Osgood Parameter n	Compressive Modulus, ksi x 10^3
RT	72	13	33.6
600	50	13	29.9
1000	46	15	27.2
1400	40	18	24.9

Compressive tangent-modulus curves were also constructed utilizing the above parameters and the following equation:

$$E_{tan} = \frac{1}{\frac{1}{E} + nKf^{n-1}}$$

where tangent modulus is the first derivative of stress with respect to strain, df/de. Typical compressive stress-strain and compressive tangent modulus curves at various temperatures are presented in Figure 30.

Physical property data for Alloy 188 were available in Reference 6. This source indicates the density to be 0.330 lb/cu in. The effect of temperature on coefficient of expansion, thermal conductivity, and specific heat is shown by working curves in Figure 20 and the corresponding MIL-HDBK-5 illustration in Figure 22.

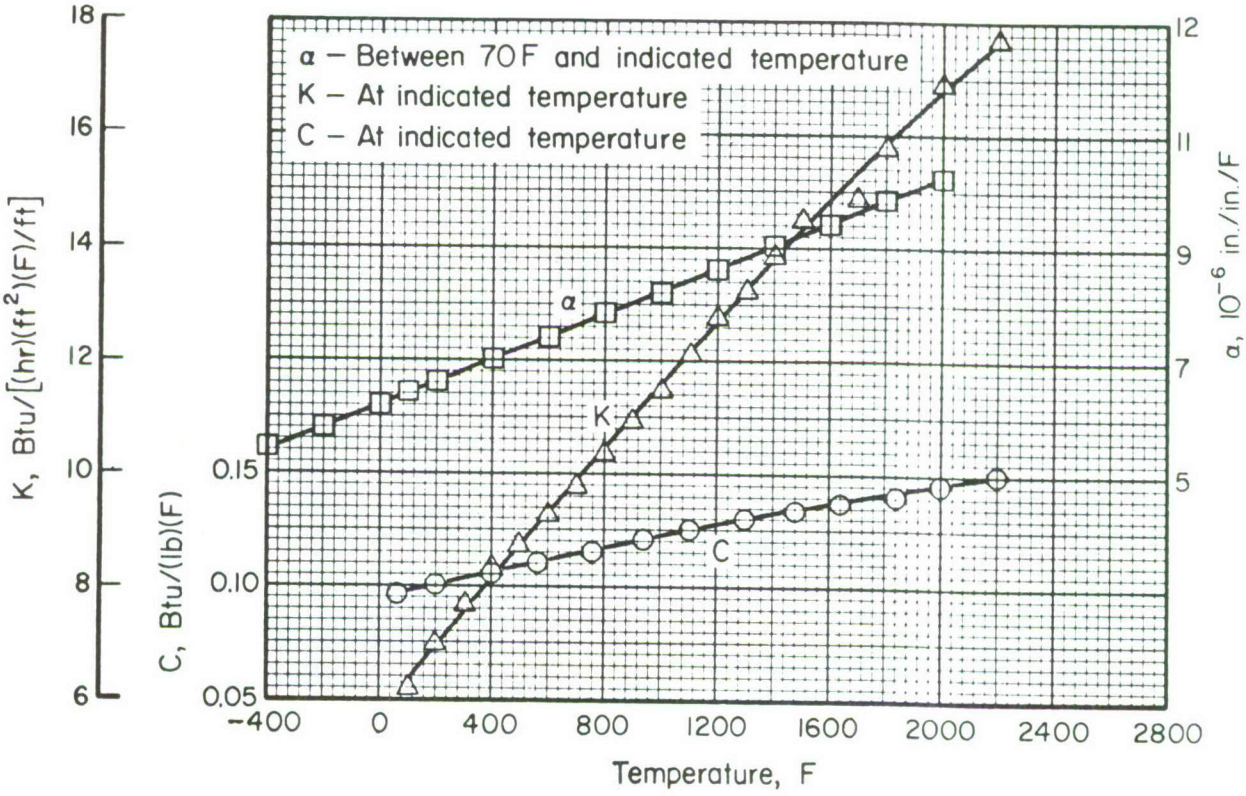

FIGURE 20. WORKING CURVE SHOWING EFFECT OF TEMPERATURE ON PHYSICAL PROPERTIES OF ALLOY 188

A MIL-HDBK Section 6.4.2.0 describing Alloy 188 has been prepared as shown in Figure 21.

Discussion - The $\frac{SUS}{TUS}$ reduced ratio of 88.9 for Alloy 188 appears high. However, this ratio compares favorably with the $\frac{SUS}{TUS}$ ratio of 84.6 for L-605, a similar cobalt-base alloy. The latter ratio was computed from MIL-HDBK Table 6.5.1.0(b).

Summary - A complete new MIL-HDBK-5 Section 6.4.2 has been prepared to incorporate design allowable properties for Alloy 188 into MIL-HDBK-5. The section consists of a comments section, Figure 21, and room temperature design mechanical properties as shown in Table 22. These allowables are based upon specification minimum tensile strengths. In addition, effect of temperature on tensile yield and ultimate strengths, compressive yield strength, elongation, dynamic moduli of elasticity, Poisson's ratio, and physical properties are shown in Figures 22 through 28. Typical room temperature tensile stress-strain as well as room and elevated temperature compressive stress-strain and compressive tangent-modulus curves are presented in Figures 29 and 30.

6.4.2.0 Comments and Properties - Alloy 188 is a corrosion and heat resistant cobalt-base alloy used for moderately stressed parts up to 2100 F. The alloy exhibits outstanding oxidation resistance up to 2100 F resulting from the addition of minute amounts of lanthanum to the alloy system. The alloy exhibits excellent post-aged ductility after prolonged heating of 1000 hours at temperatures up to 1600 F inclusive.

Alloy 188 is not hardenable except by cold working and is used in the solution treated condition. The alloy can be forged and welded. Welding can be accomplished by both manual and automatic welding methods including electron beam, gas tungsten air, and resistance welding. Like other cobalt base alloys, machining is difficult necessitating the use of sharp tools and low cutting speeds; high speed steel or carbide cutting tools are recommended.

Gas turbine applications include transition ducts, combustion cans, spray bars, flameholders and liners. Material specifications for Alloy 188 are presented in Table 6.4.2.0 (a).

TABLE 6.4.2.0(a) Material Specifications for Alloy 188

Specification	Form	Condition
AMS 5608	Sheet and plate	Solution treated (annealed)
AMS 5772	Bars and forgings	Solution treated (annealed)

Room Temperature Properties

Room temperature mechanical and physical properties are shown in Table 6.4.2.0(b). The effect of temperature on physical properties is shown in Figure 6.4.2.0.

6.4.2.1 Solution Treated Condition - Elevated temperature properties for this condition are presented in Figures 6.4.2.1.1(a) through 6.4.2.1.4.

Typical tensile stress-strain curves at room temperature are presented in Figure 6.4.2.1.6(a). Typical compressive stress-strain and tangent modulus curves at room and elevated temperatures are presented in Figure 6.4.2.1.6(b).

FIGURE 21. PROPOSED MIL-HDBK-5 SECTION 6.4.2 FOR ALLOY 188

TABLE 22. PROPOSED MIL-HDBK-5 TABLE 6.4.2.0(b)

TABLE 6.4.2.0(b). *Design Mechanical and Physical Properties of* Alloy 188

Specification	AMS 5608	
Form	Sheet	
Condition	Solution treated	
Thickness or diameter, in.	<0.020	0.020 - 0.187
Basis	S	S
Mechanical properties:		
F_{tu}, ksi:		
L	125	125
LT	125	125
F_{ty}, ksi:		
L	57	57
LT	55	55
F_{cy}, ksi:		
L	---	---
LT	55	55
F_{su}, ksi	111	111
F_{bru}, ksi:		
(e/D = 1.5)	---	---
(e/D = 2.0)	---	---
F_{bry}, ksi:		
(e/D = 1.5)	---	---
(e/D = 2.0)	---	---
e, percent:		
L	---	---
LT	40	45
E, 10^3 ksi	33.6	
E_c, 10^3 ksi	33.6	
G, 10^3 ksi	12.8	
μ	0.31	
Physical properties:		
ω, lb/in.^{3}	0.330	
C, Btu/(lb)(F)	See Figure 6.4.2.0	
K, Btu/[(hr)(ft^2)(F)/ft]	See Figure 6.4.2.0	
α, 10^{-6} in./in./F	See Figure 6.4.2.0	

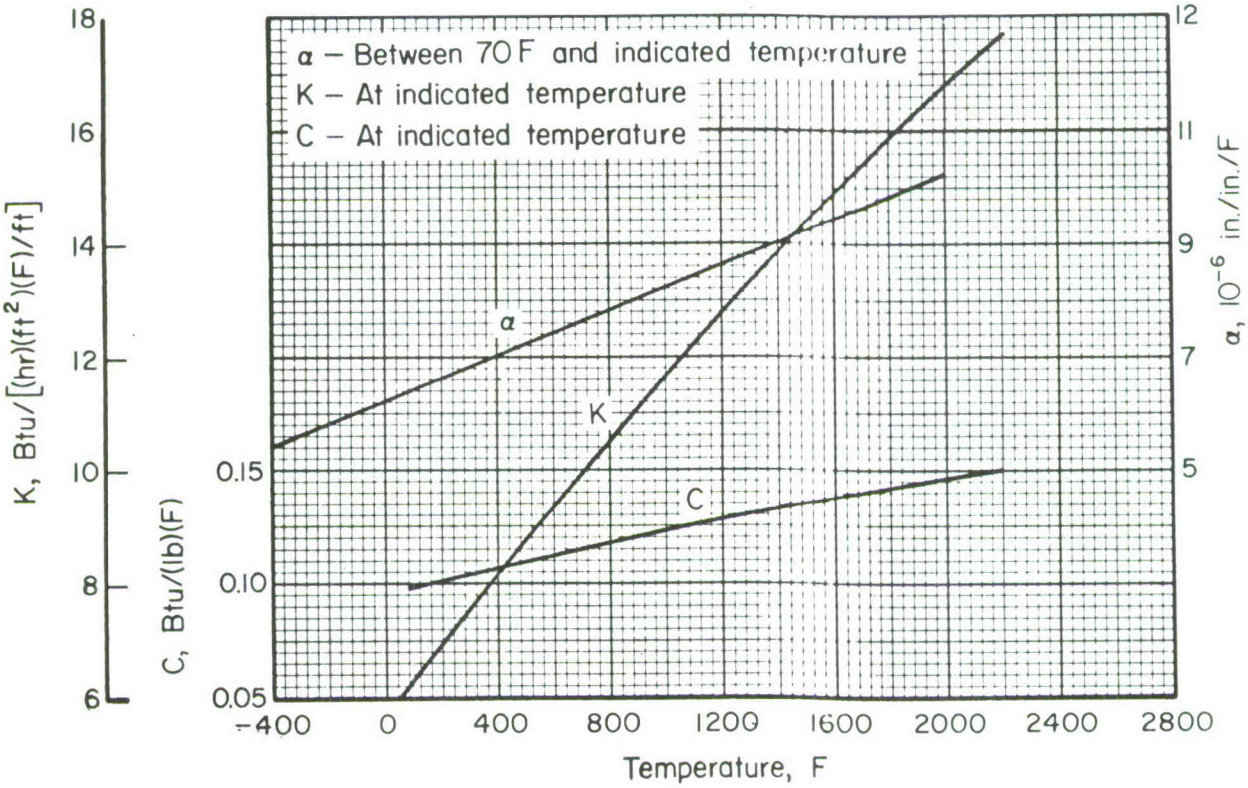

FIGURE 6.4.2.0. Effect of temperature on the physical properties of Alloy 188.

FIGURE 22. PROPOSED MIL-HDBK-5 FIGURE 6.4.2.0

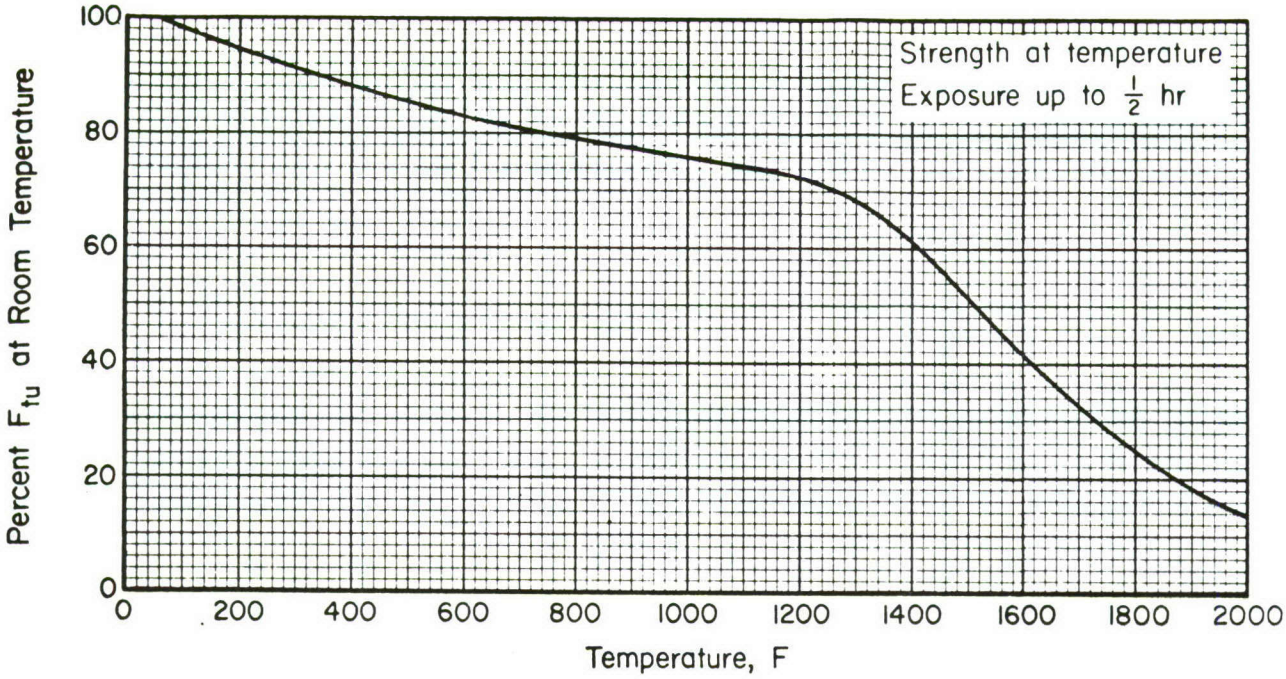

FIGURE 6.4.2.1.1(a) Effect of temperature on ultimate tensile strength (F_{tu}) of Alloy 188 sheet.

FIGURE 23. PROPOSED MIL-HDBK-5 FIGURE 6.4.2.1.1(a)

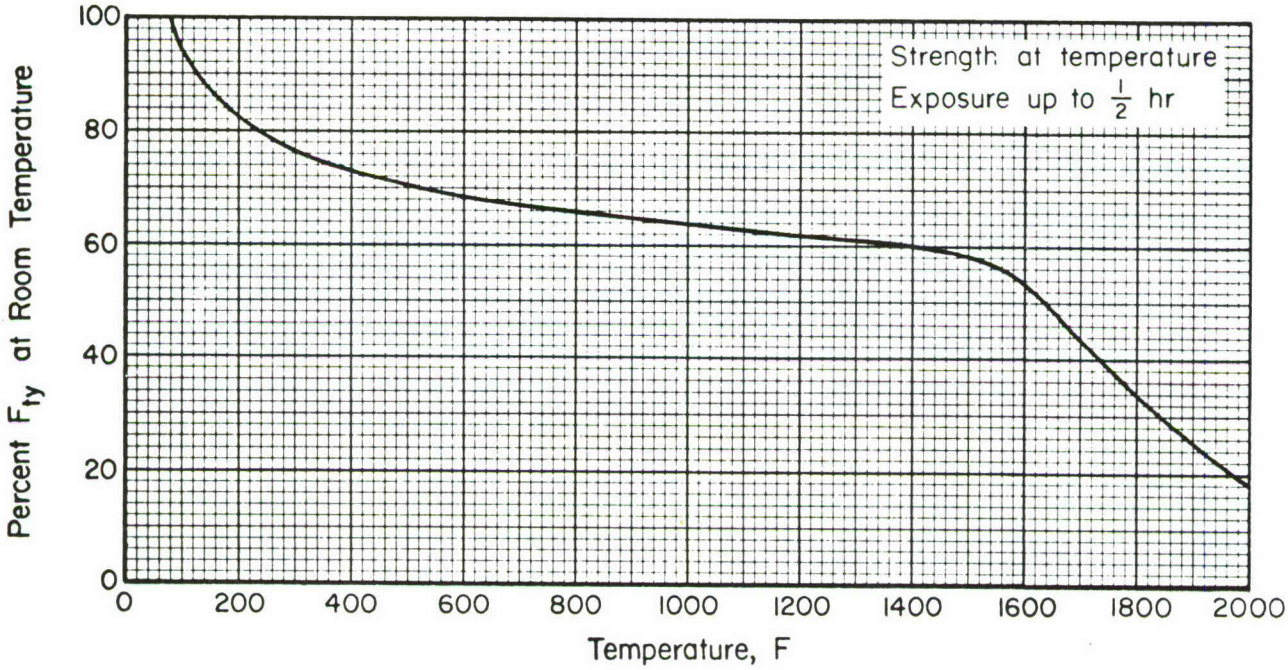

FIGURE 6.4.2.1.1(b). Effect of temperature on tensile yield strength (F_{ty}) of Alloy 188 sheet.

FIGURE 24. PROPOSED MIL-HDBK-5 FIGURE 6.4.2.1.1(b)

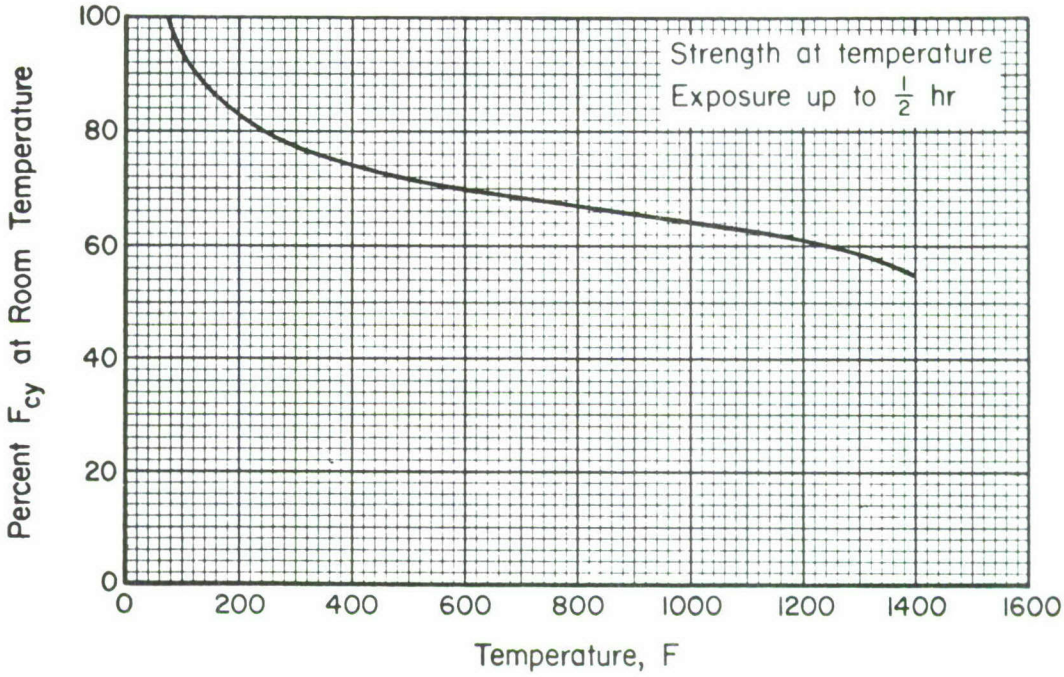

FIGURE 6.4.2.1.2. Effect of temperature on compressive yield strength (F_{cy}) of Alloy 188 sheet.

FIGURE 25. PROPOSED MIL-HDBK-5 FIGURE 6.4.2.1.2

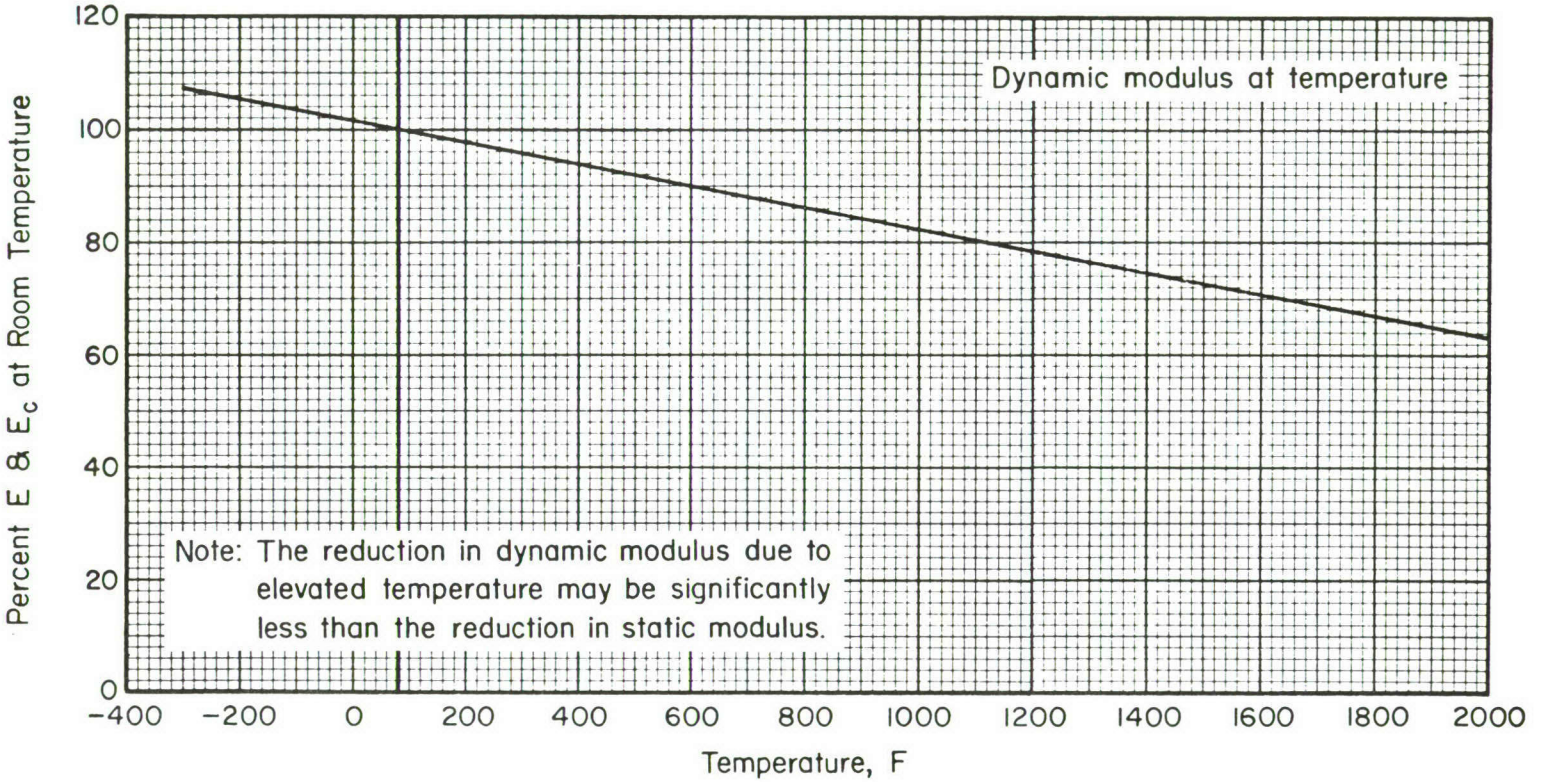

FIGURE 6.4.2.1.4(a). Effect of temperature on dynamic moduli (E and E_c) of Alloy 188.

FIGURE 26. PROPOSED MIL-HDBK-5 FIGURE 6.4.2.1.4(a)

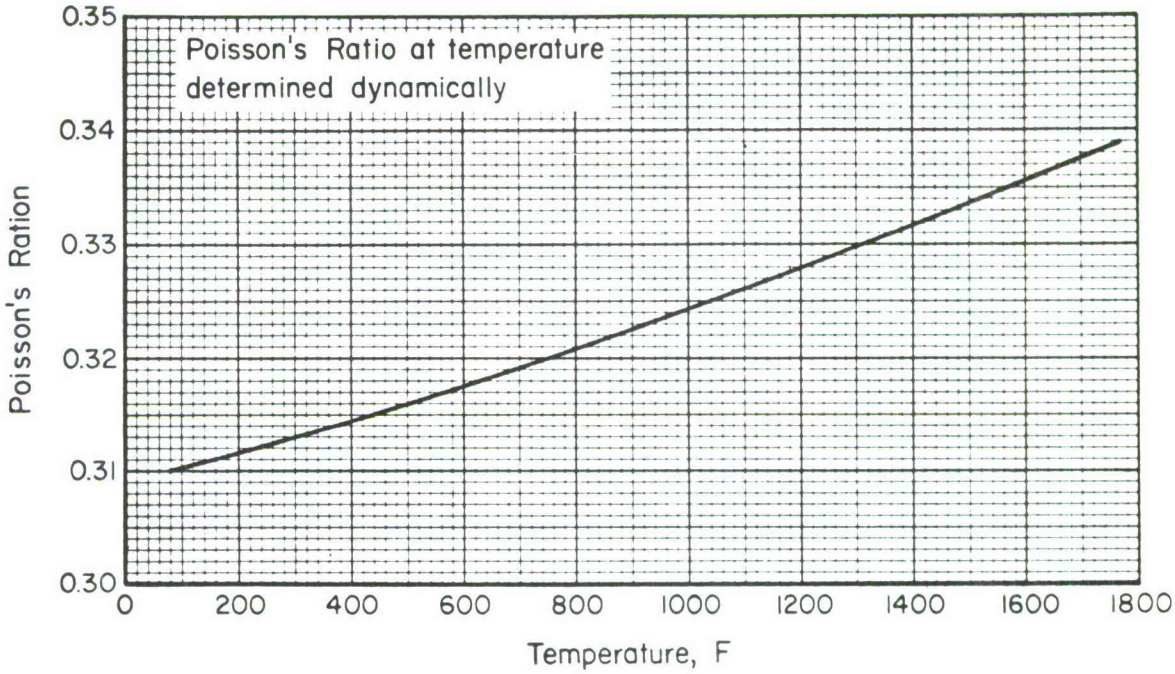

FIGURE 6.4.2.1.4(b). Effect of temperature on Poisson's ratio (μ) for Alloy 188.

FIGURE 27. PROPOSED MIL-HDBK-5 FIGURE 6.4.2.1.4(b)

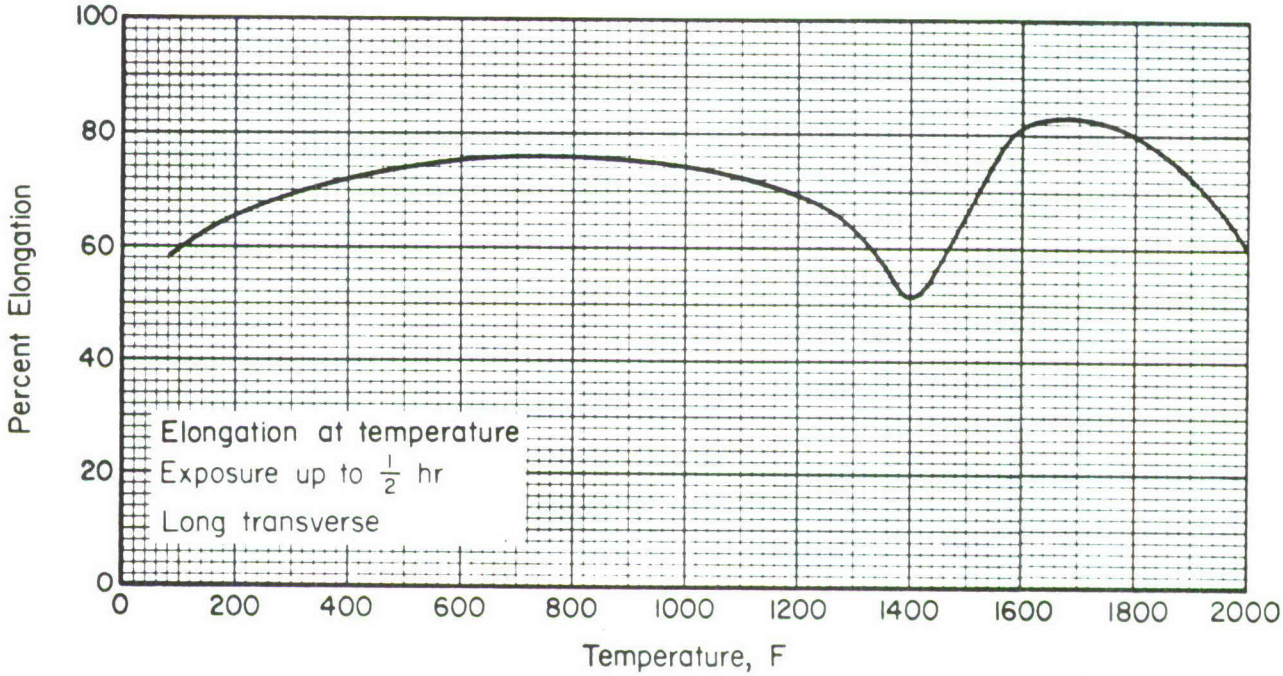

FIGURE 6.4.2.1.5. Effect of temperature on elongation (e) of Alloy 188 sheet.

FIGURE 28. PROPOSED MIL-HDBK-5 FIGURE 6.4.2.1.5

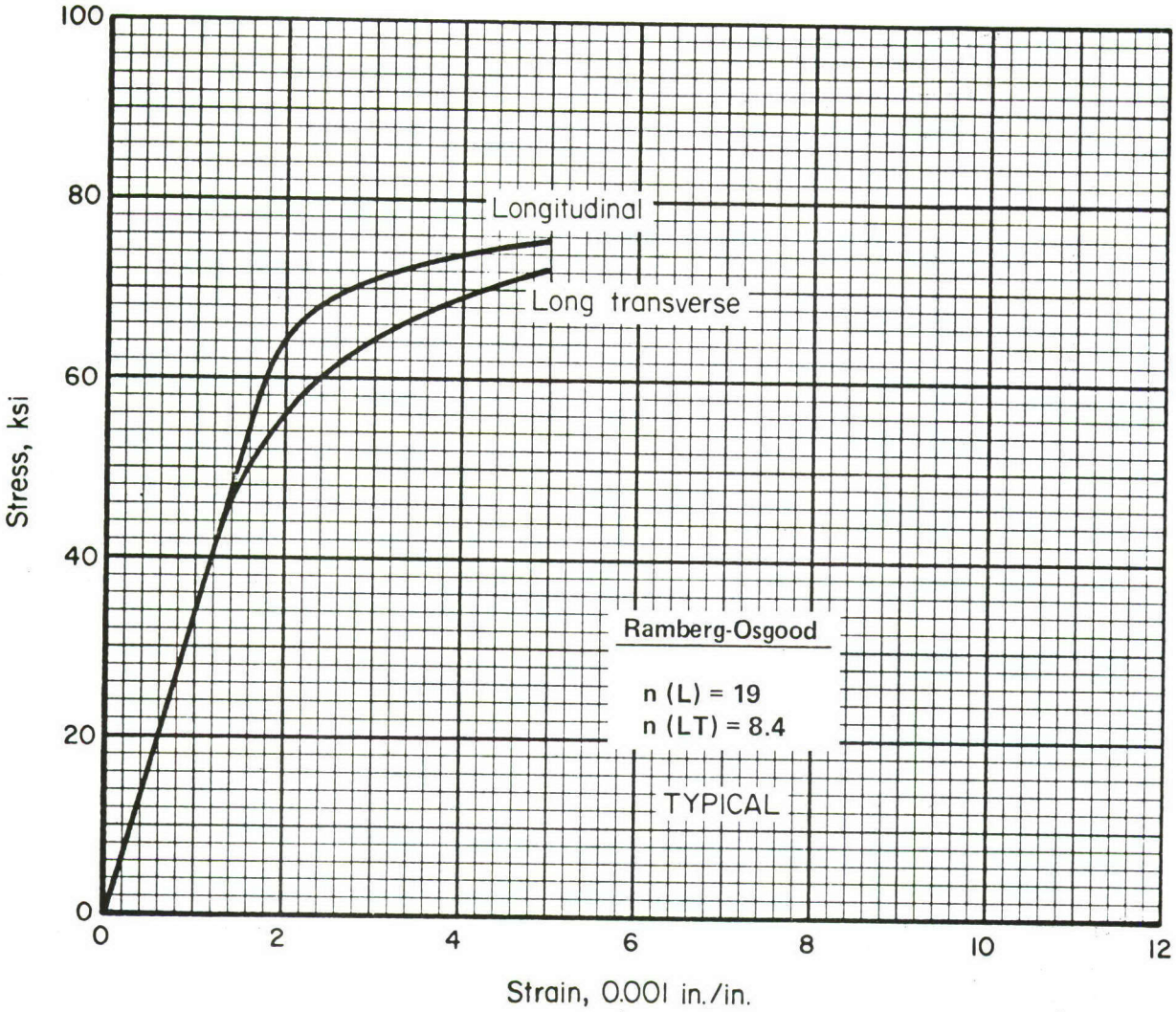

FIGURE 6.4.2.1.6(a). Typical tensile stress-strain curves for Alloy 188 sheet at room temperature.

FIGURE 29. PROPOSED MIL-HDBK-5 FIGURE 6.4.2.1.6(a)

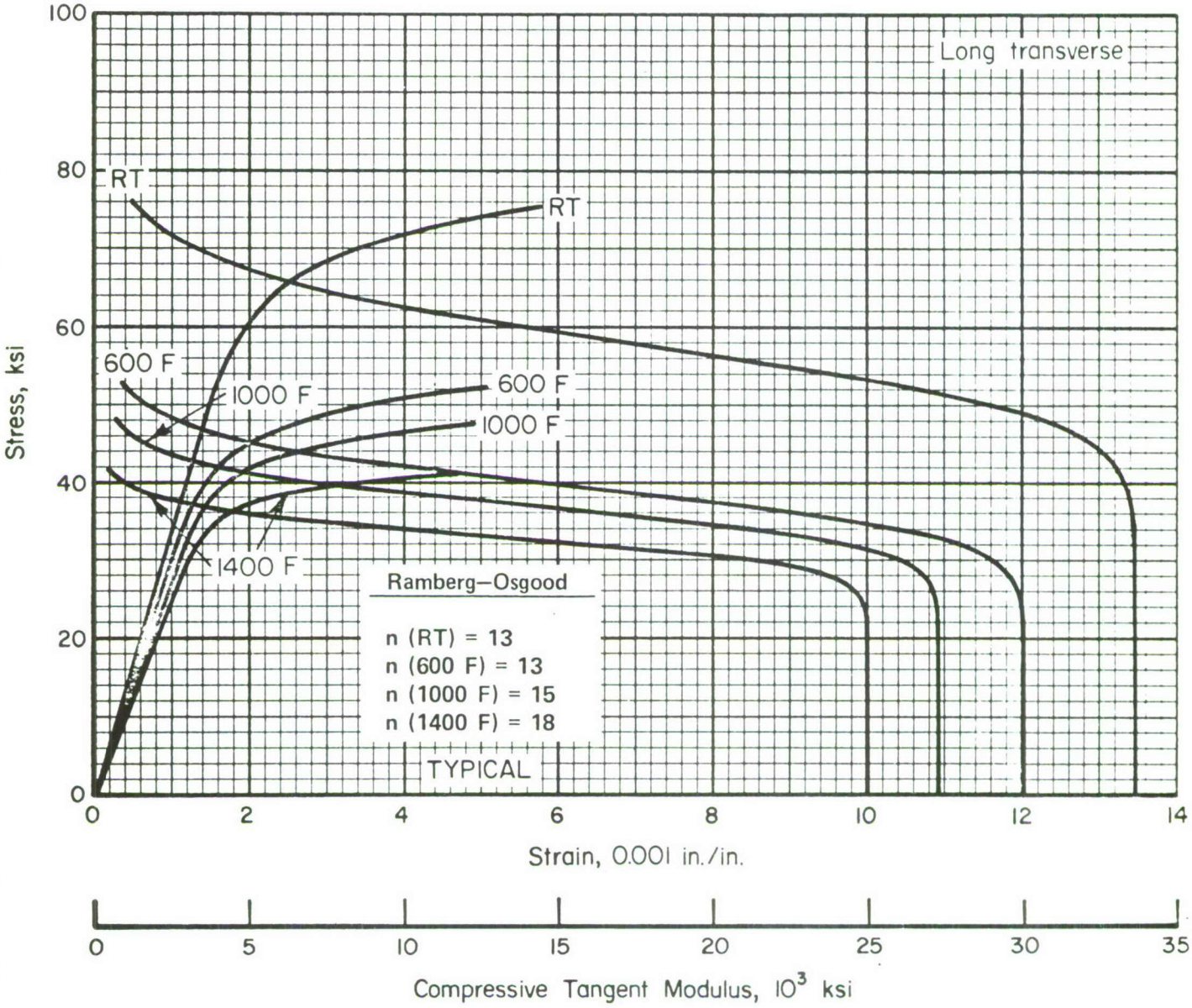

FIGURE 6.4.2.1.6(b). Typical compressive stress-strain and tangent-modulus curves for Alloy 188 sheet at various temperatures.

FIGURE 30. PROPOSED MIL-HDBK-5 FIGURE 6.4.2.1.6(b).

15-5PH Precipitation Hardening Stainless Steel Bar

Background - MIL-HDBK-5 currently contains "derived property" allowables for 15-5PH in two heat treat conditions, H1025 and H1150, with bearing strength allowables available only for the H1025 condition. In order to complete the room temperature mechanical property allowables for the H1150 condition, it is desirable to establish bearing yield and ultimate strength for e/D = 1.5 and e/D = 2.0. A literature search did not produce any bearing strength data for the H1150 condition; consequently, testing was required to obtain these data.

Elevated temperature tensile yield and ultimate strength curves[8] for the H925, H1025, and H1100 conditions were approved for incorporation at the 49th MIL-HDBK-5 Meeting and will appear in Revision C. Similarly, it is desirable to establish elevated temperature compressive yield strength curves for the various tempers. Elevated temperature compressive yield strength data for one heat in the longitudinal and long transverse grain directions for the H1025 condition are available in Reference 9. Elevated temperature compressive yield strengths are the H1150 condition for three heats in the longitudinal grain direction are available in Reference 1. Consequently, only a modest amount of testing was needed to obtain the required quantity of elevated temperature compressive yield strength data for the H1025 and H1150 heat treat conditions.

Test Plan - As defined in Chapter 1, Section 1.4.1.3 of MIL-HDBK-5, derived values are those room temperature mechanical property values that are established through their relationship to directly calculated values for room temperature F_{tu} and F_{ty}. The guidelines for the presentation of data are described in Chapter 9, Section 9.2.9.1, of MIL-HDBK-5 and require at least ten pairs of measurements, each representing a single lot of material. To establish the shape of elevated temperature curves for the various properties, Section 9.3.1.1.1 of MIL-HDBK-5 requires a sample consisting of at least five lots of material at each of several temperatures. The test plan for acquiring the

---

(8) Item 75-6, "Elevated Temperature Curves for 15-5PH Bar", 49th MIL-HDBK-5 Meeting Handout Proposal, April 1975.

(9) Deel, O. L., and Mindlin, H., "Engineering Data on New Aerospace Structural Materials", AFML-TR-72-196, Volume II, September 1972.

tensile, compression, and bearing data for the H1150 condition is presented in Table 23. The required compression tests for the H1025 condition are shown in Table 24.

Material - The same seven heats of consumable electrode vacuum melted 15-5PH bar that were evaluated in the previous project, Reference 1 , were utilized for this test program. The material had been supplied by Armco Steel Corporation at no cost. The bars, varying from 5/8 inch to 5-1/2 inches in thickness, were selected to encompass a wide thickness range. Chemical composition of the six heats as reported by Armco is shown in Table 25. These compositions conformed to the requirements of AMS 5659.

Heat Treatment - In order to remove any cold work from straightening, appropriate lengths from each bar were solution treated at 1900 $\pm$ 25 F for 1/2 hour per inch of section thickness and air cooled to room temperature. The bars were precipitation heat treated at 1025 or 1150 F for 4 hours and air cooled. All heat treatment was performed in air furnaces.

Specimen Preparation - After heat treatment, specimens were machined from the bars at the locations shown in Figures 31 through 39. The configurations of the various test specimens are shown in Figures A-1 through A-4, Appendix A.

Testing - Room temperature tensile, compression, and bearing tests and elevated temperature compression tests were performed in accordance with the procedures described in Appendix B. The results of the tests are shown in Tables 26 and 27. The tensile ultimate strengths of two heats, 3X0786 and 1W0516, were slightly below producers' guaranteed minimum value of 135 ksi for H1150 condition.

Analysis - As previously indicated, derived values refer to those room temperature mechanical property values that are established through their relationships to directly calculated values for room temperature F_{tu} and F_{ty}. The procedure is applicable to F_{bru} and F_{bry} and involves the pairing of individual BUS measurements with TUS measurements for which F_{tu} has been established.

TABLE 23. TEST PLAN FOR 15-5PH BAR H1150 CONDITION

Heat Identification	Grain Direction	Room Temperature Tensile	Room Temperature Bearing e/D = 1.5	Room Temperature Bearing e/D = 2.0	Temperature RT, 400, 700, 900 F Compression
3X0786	L	3	3	3	
3X0786	T	3	3	3	
1W0516	L	3	3	3	2
1W0516	T	3	3	3	
1W0861	L	3	3	3	
1W0861	T	3	3	3	
4X0780	L	3	3	3	2
3W0523	L	3	3	3	
3W0687	L	3	3	3	
Total		27	27	27	16

TABLE 24. TEST PLAN FOR 15-5PH BAR H1025 CONDITION

Identification	Grain Direction	Room Temperature Control Tensile	Temperature RT, 400, 700, 900 F Compression
1W0516	L	1	2
1W0861	L	1	2
4X0780	L	1	2
Total		3	24

TABLE 25. CHEMICAL COMPOSITIONS OF 15-5PH TEST MATERIALS

Material Code	Heat Number	Chemical Analyses (weight, percent)								
		C	Mn	P	S	Si	Cr	Ni	Cu	Cb
A	3X0786	0.043	0.24	0.021	0.0048	0.35	14.99	4.59	3.28	0.28
B	1W0516	0.020	0.16	0.015	0.011	0.35	14.69	4.61	3.21	0.21
C	1W0861	0.029	0.34	0.022	0.005	0.45	15.18	4.62	3.25	0.31
E	4X0780	0.032	0.16	0.019	0.014	0.45	14.84	4.52	3.32	0.27
F	3W0523	0.025	0.22	0.013	0.007	0.32	15.11	4.46	3.44	0.22
G	3W0687	0.042	0.30	0.017	0.006	0.40	15.07	4.74	3.54	0.29
	AMS 5659	0.07 Maximum	1.00 Maximum	0.040 Maximum	0.030 Maximum	1.00 Maximum	14.00-15.50	3.50-5.50	2.50-4.50	5 x C-0.45

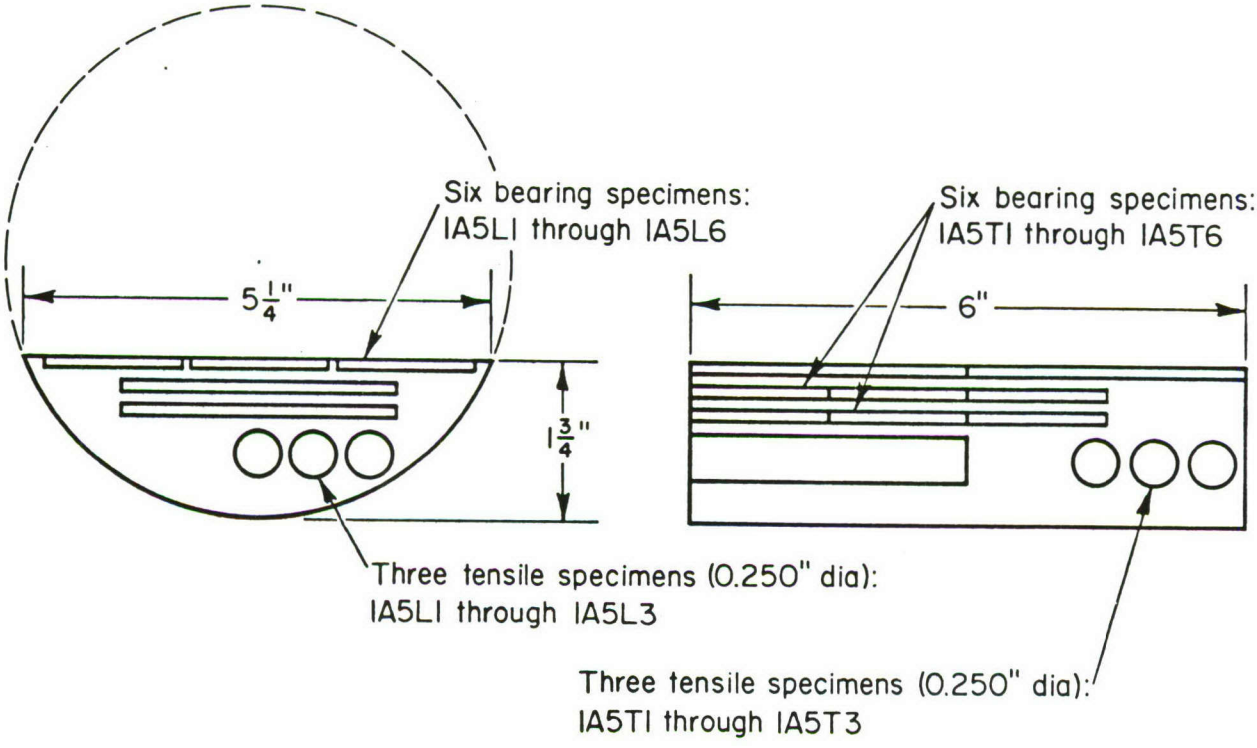

FIGURE 31. LOCATION OF TEST SPECIMENS FOR 15-5PH BAR, H1150-CODE A

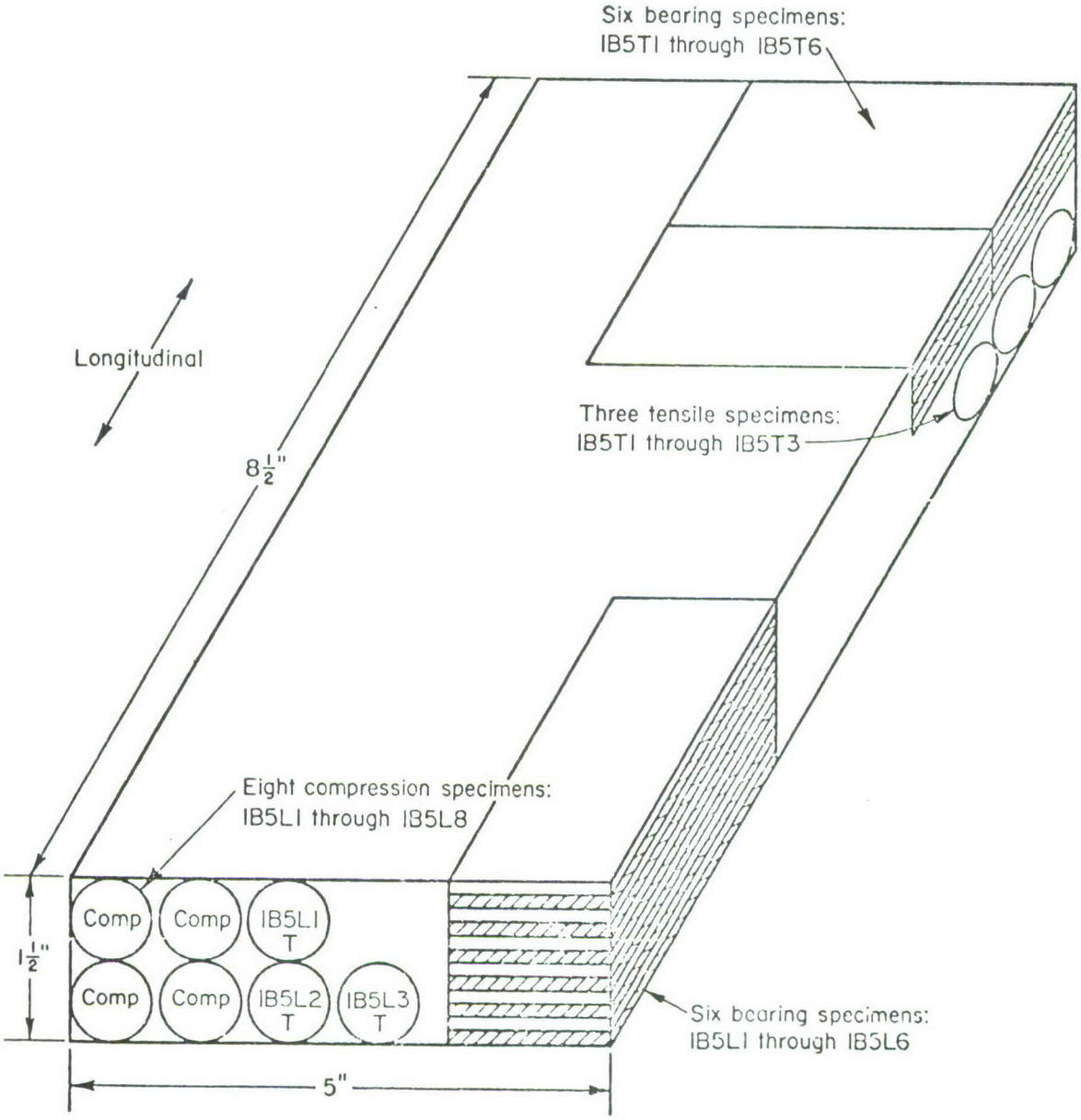

FIGURE 32. LOCATION OF TEST SPECIMENS FOR 15-5PH BAR, H1150-CODE B

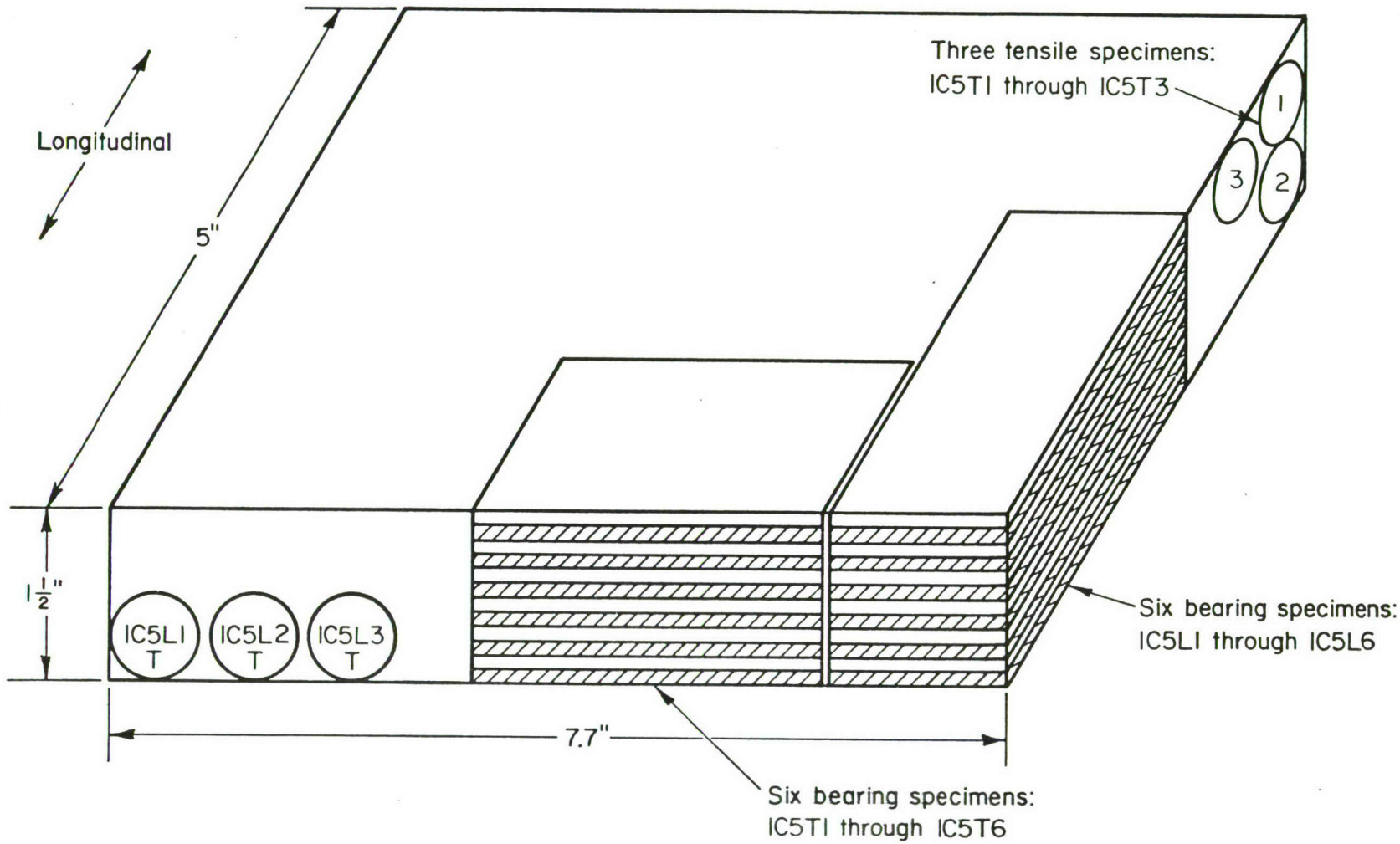

FIGURE 33. LOCATION OF TEST SPECIMENS FOR 15-5PH BAR, H1150-CODE C

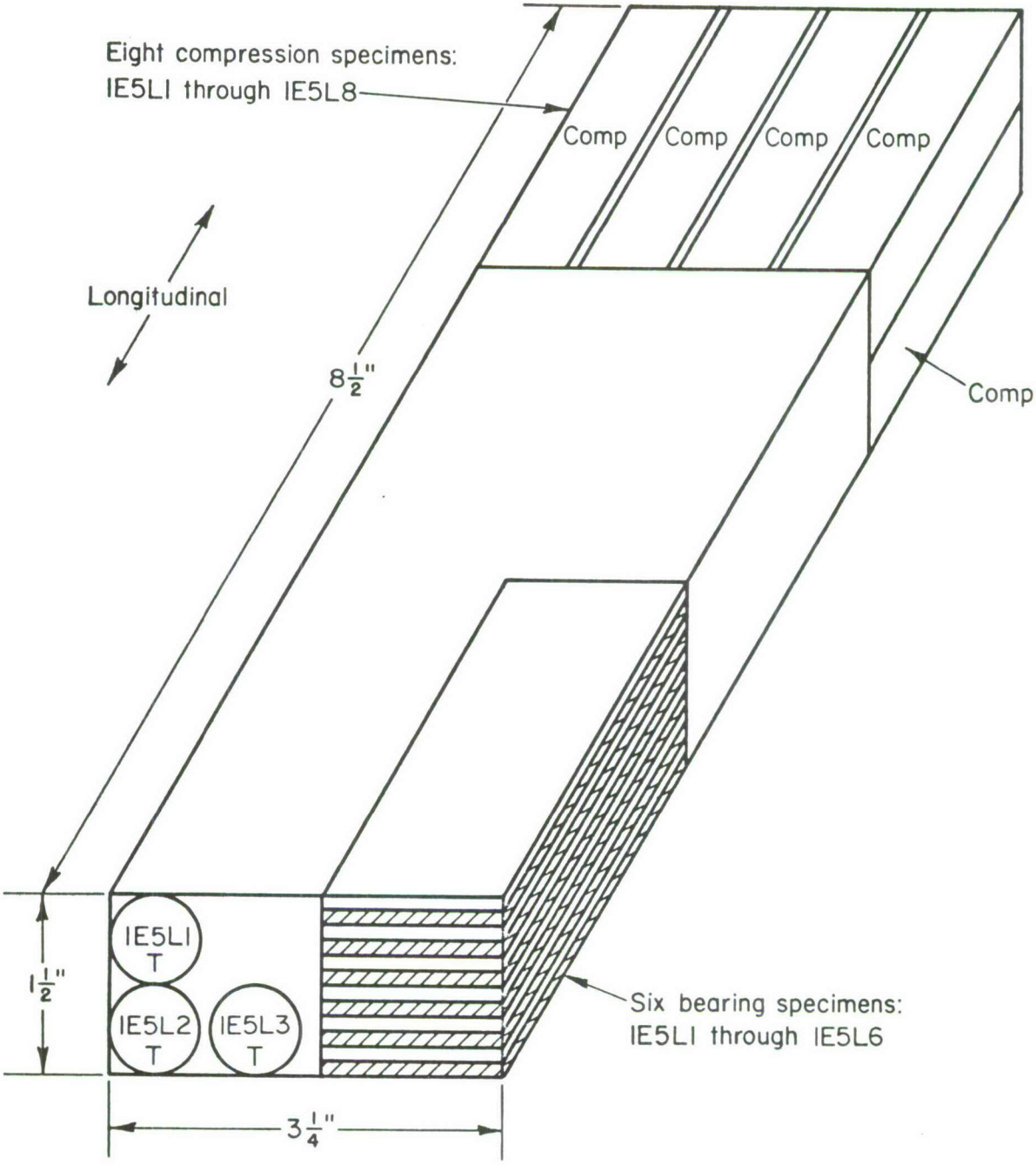

FIGURE 34. LOCATION OF TEST SPECIMENS FOR 15-5PH BAR, H1150-CODE E

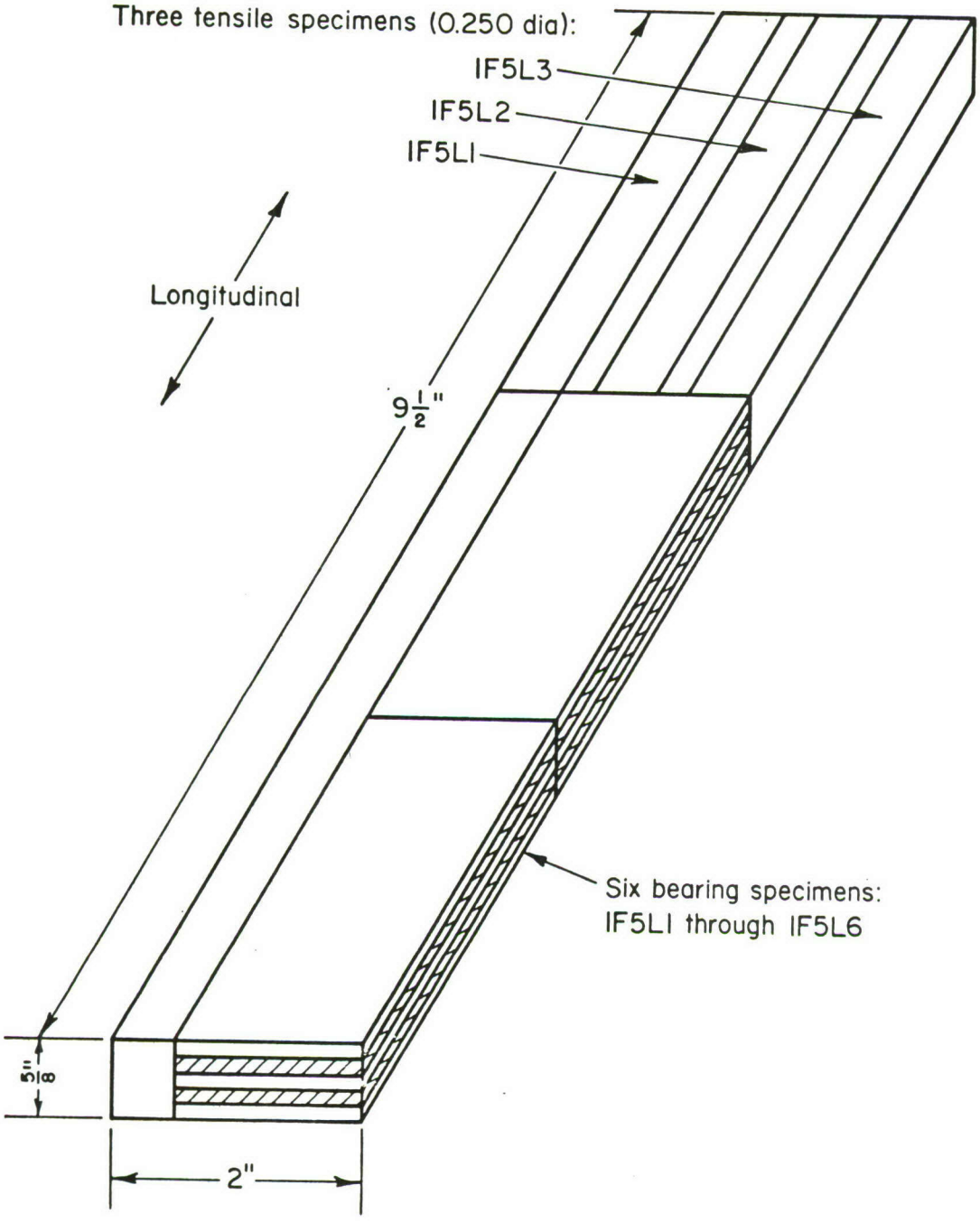

FIGURE 35. LOCATION OF TEST SPECIMENS FOR 15-5PH, H1150-CODE F

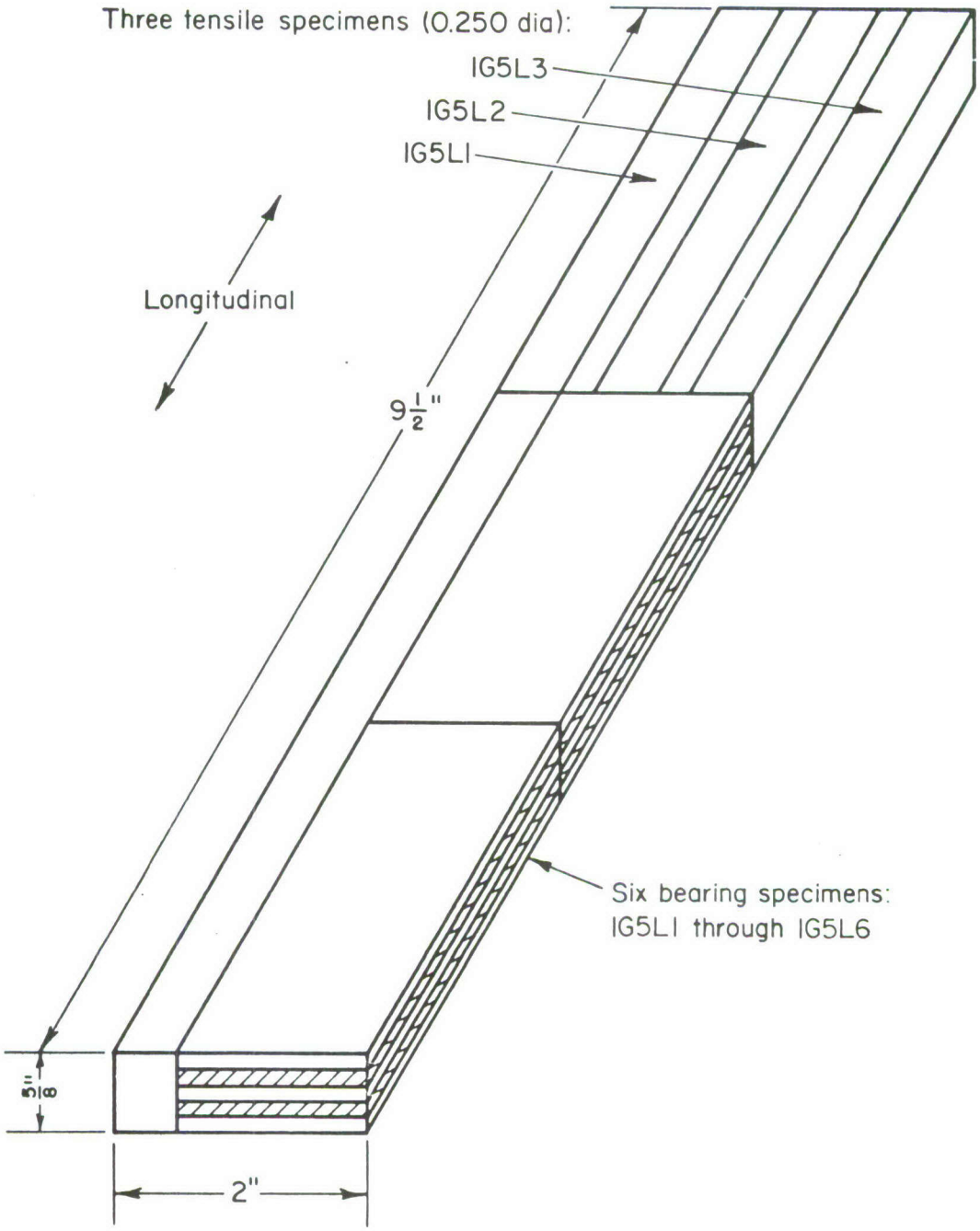

FIGURE 36. LOCATION OF TEST SPECIMENS FOR 15-5PH, H1150-CODE G

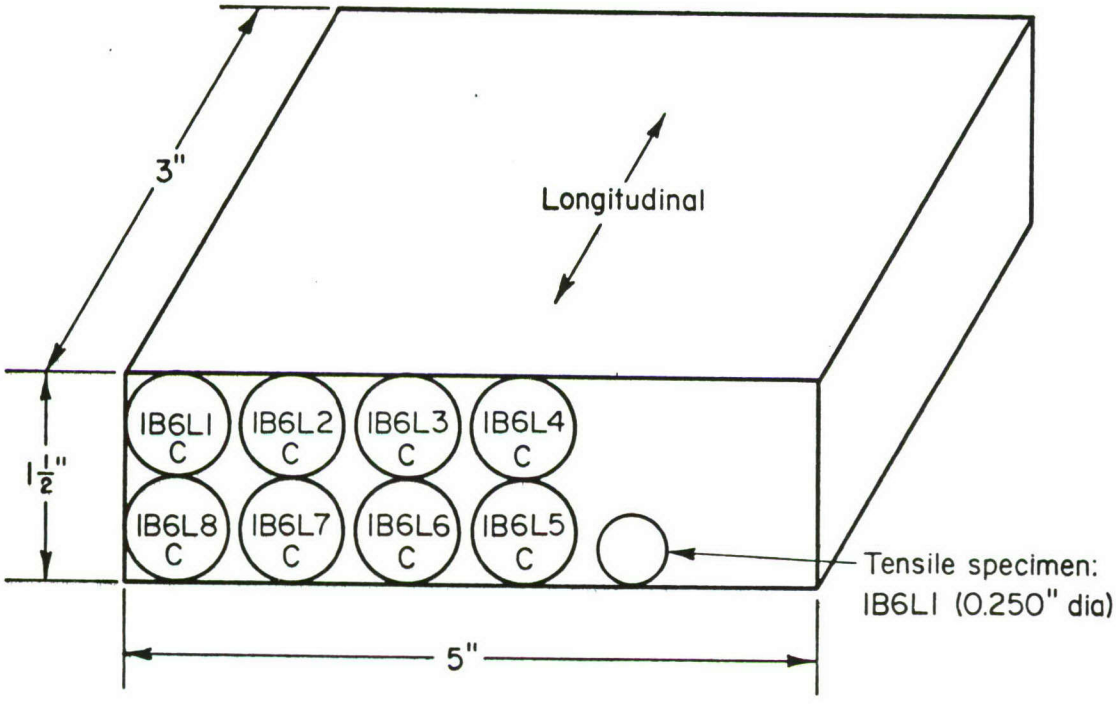

FIGURE 37. LOCATION OF TEST SPECIMENS FOR 15-5PH, H1025-CODE B

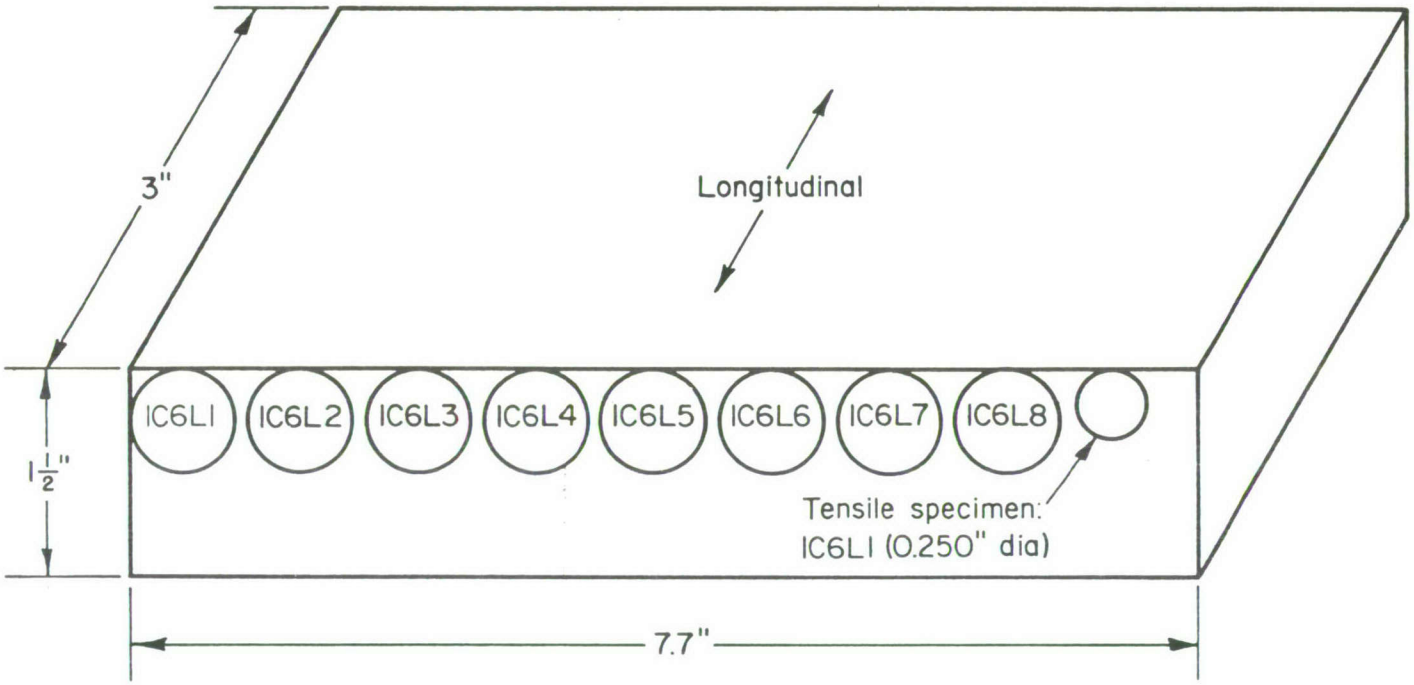

FIGURE 38. LOCATION OF TEST SPECIMENS FOR 15-5PH, H1025-CODE C

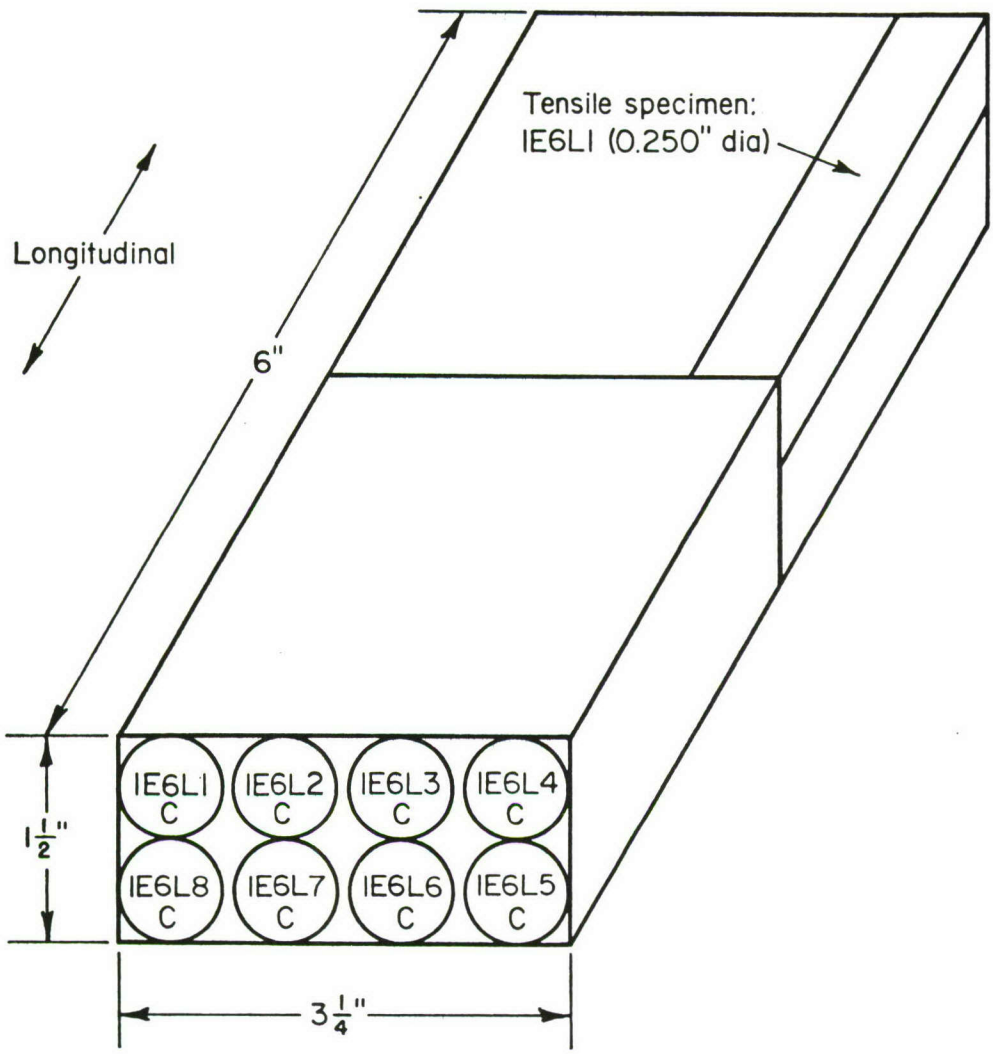

FIGURE 39. LOCATION OF TEST SPECIMENS FOR 15-5PH, H1025-CODE E

TABLE 26. MECHANICAL PROPERTIES OF 15-5PH BAR CONDITION H1150

Code/ Heat No.	Bar Size	Test Temp.	Grain Direction	Specimen Identification	Tension						Compression			Bearing			
														e/d = 1.5		e/d = 2.0	
					TUS, ksi	TYS, ksi	e, percent in 4D	RA, percent	E, 10^3 ksi	n	CYS, ksi	E_c, 10^3 ksi	n	BUS, ksi	BYS, ksi	BUS, ksi	BYS, ksi
A 3X0786	5-1/2 in. round	RT	L	1A5L1	135.0	112.1	24.0	70.8	25.8	9				224.6	177.4	293.2	222.1
				1A5L2	134.6	111.5	22.0	72.9	26.1	8				231.0	182.3	295.9	220.1
				1A5L3	134.1	111.8	24.0	73.9	26.2	10				231.2	179.2	295.2	221.1
				Average	134.6	111.8	23.3	72.5	76.0	9				228.9	179.6	294.8	221.1
			LT	1A5T1	132.9	107.1	23.0	70.9	25.7	7				225.8	174.7	291.4	211.8
				1A5T2	132.1	106.1	23.0	70.8	25.5	9				226.6	177.1	290.7	213.6
				1A5T3	131.2	103.9	24.0	70.4	26.3	8				228.9	184.3	294.8	220.3
				Average	132.1	105.7	23.7	70.7	25.8	8				227.1	178.7	292.3	215.2
B 1W0516	1-1/2 x 5 in. flat	RT	L	1B5L1	134.0	109.4	21.0	73.8	28.3	8	117.8	26.4	8	235.0	188.4	299.6	226.3
				1B5L2	133.9	109.8	22.0	69.0	27.9	7	113.5	26.1	10	233.2	186.8	296.2	225.1
				1B5L3	133.9	110.6	23.0	72.0	27.5	6	--	--	--	233.6	184.0	296.9	222.3
				Average	133.9	109.9	22.0	71.6	27.9	7	115.6	26.3	9	233.9	186.4	297.6	224.6
		400 F	L	1B5L3							111.9	27.5	17				
				1B5L4							111.3	27.9	15				
				Average							111.6	27.7	16				
		700 F	L	1B5L5							103.0	26.3	14				
				1B5L6							103.7	28.6	15				
				Average							103.4	27.5	15				
		900 F	L	1B5L7							89.5	21.2	17				
				1B5L8							91.9	21.4	10				
				Average							90.7	21.3	14				
		RT	LT	1B5T1	133.8	108.8	18.0	51.0	25.3	7				231.3	179.8	292.1	222.7
				1B5T2	133.6	108.1	18.0	50.0	27.0	6				231.6	181.2	288.3	219.6
				1B5T3	(a)	(a)	(a)	(a)	(a)	(a)				230.9	180.7	292.3	220.1
				Average	133.7	108.4	18.0	50.5	26.1	6.5				231.3	180.6	290.9	220.8
C 1W0861	1.5 x 7.7 flat	RT	L	1C5L1	138.2	121.4	22.0	70.0	25.7	13				235.6	192.1	305.6	224.3
				1C5L2	138.0	119.0	23.0	71.0	29.1	12				235.6	187.9	298.9	224.8
				1C5L3	138.3	119.6	22.0	71.0	25.3	17				(b)	(b)	300.0	222.8
				Average	138.2	120.0	22.3	70.7	26.7	14				235.6	190.0	301.5	224.0
			LT	1C5T1	139.3	123.6	22.0	67.0	25.8	12				237.3	184.3	301.5	229.5
				1C5T2	139.4	124.5	21.5	66.0	26.4	12				236.3	185.4	301.5	228.3
				1C5T3	138.5	122.4	22.0	67.0	30.6	12				240.0	187.5	301.7	222.0
				Average	139.1	123.5	21.8	66.7	27.6	12				237.9	185.8	301.6	226.6
E 4X0780	1-1/2 x 3 flat	RT	L	1E5L1	135.6	113.7	22.0	70.0	27.4	8	120.7	26.5	9	231.4	182.7	297.2	223.5
				1E5L2	134.7	113.8	23.0	69.0	28.6	9	122.7	26.4	9	233.1	184.5	295.8	225.0
				1E5L3	135.8	114.5	22.0	70.0	26.2	10	--	--	--	230.3	180.5	294.7	218.3
				Average	135.0	114.0	22.3	69.7	27.4	9	121.7	26.5	9	231.6	182.6	295.9	222.3
		400 F	L	1E5L3							113.9	27.5	21				
				1E5L4							112.9	27.9	21				
				Average							113.4	27.7	21				
		700 F	L	1E5L5							103.9	26.4	16				
				1E5L6							105.5	27.0	14				
				Average							104.7	26.7	15				
		900 F	L	1E5L7							92.1	24.1	9				
				1E5L8							92.1	24.2	11				
				Average							92.1	24.2	10				
F 3W0523	5/8 x 2 flat	RT	L	1F5L1	135.8	107.8	24.0	72.7	27.0	8				232.0	175.2	293.6	216.6
				1F5L2	137.1	110.3	23.0	70.8	26.9	7				230.2	175.5	294.5	209.9
				1F5L3	137.7	108.0	23.0	71.6	27.3	5				230.6	180.4	301.2	214.8
				Average	136.9	108.7	23.3	71.7	27.1	7				230.9	177.0	296.4	213.8
G 3X0687	5/8 x 2 flat	RT	L	1G5L1	137.9	114.3	23.0	71.0	27.5	9				237.1	185.7	295.8	219.4
				1G5L2	138.0	118.3	23.0	70.7	26.8	10				237.0	186.9	301.5	229.1
				1G5L3	137.4	115.2	24.0	70.2	26.2	9				240.1	192.1	298.0	225.2
				Average	137.8	115.9	23.3	70.6	26.8	9				238.1	188.2	298.4	224.6

[a] Specimen missing.

[b] Machine malfunction.

TABLE 27. LONGITUDINAL MECHANICAL PROPERTIES OF 15-5PH BAR CONDITION H1025

Code Heat No.	Bar Size	Test Temp.	Grain Direction	Specimen Identification	Compression CYS, ksi	Compression E_c, 10^3 ksi	Compression n	Tension (Heat Treat Control) TUS, ksi	TYS, ksi	e, percent in 4D	RA, percent	E, 10^3 ksi	n
B 1W0516	1-1/2 x 5 flat	RT	L	1B6L1	159.5	27.6	19	157.8	154.9	16.0	65	27.3	27
				1B6L2	161.1	27.9	19						
				Average	160.3	27.8	19						
		400 F	L	1B6L3	138.8	27.5	20						
				1B6L4	139.7	32.4	16						
				Average	139.3	30.0	18						
		700 F	L	1B6L5	123.4	24.7	14						
				1B6L6	126.7	30.7	14						
				Average	125.1	27.7	14						
		900 F	L	1B6L7	106.1	21.7	11						
				1B6L8	107.6	21.4	13						
				Average	106.9	21.6	12						
C 1W0861	1.5 x 7.7 flat	RT	L	1C6L1	162.0	27.7	19	157.8	153.6	18.0	69.6	27.8	23
				1C6L2	162.0	27.9	21						
				Average	162.0	27.8	20						
		400 F	L	1C6L3	140.5	29.8	16						
				1C6L4	144.3	31.5	16						
				Average	142.4	30.6	16						
		700 F	L	1C6L5	127.6	31.5	8						
				1C6L6	129.0	30.9	8						
				Average	128.3	31.2	8						
		900 F	L	1C6L7	104.9	23.1	8						
				1C6L8	109.3	24.3	8						
				Average	107.1	23.7	8						
E 4X0780	1-1/2 x 3 flat	RT	L	1E6L1	162.3	28.6	19	160.0	155.8	17.0	65.9	28.7	19
				1E6L2	161.5	28.7	24						
				Average	161.9	28.7	22						
		400 F	L	1E6L3	140.5	26.1	18						
				1E6L4	141.7	26.6	14						
				Average	141.1	27.4	16						
		700 F	L	1E6L5	128.6	27.3	12						
				1E6L6	125.4	27.0	14						
				Average	127.0	27.2	13						
		900 F	L	1E6L7	109.1	23.0	11						
				1E6L8	108.9	24.5	12						
				Average	109.0	23.8	12						

Likewise, individual BYS measurements are paired with TYS measurement for which F_{ty} has been established.

Room temperature bearing yield and bearing ultimate strength reduced ratios were determined using the computational procedure described in Chapter 9, Section 9.2.9.2 of MIL-HDBK-5. The lot average test values for bearing yield strengths were paired with the corresponding lot average test values for tensile yield strengths. Similarly, the bearing ultimate values were paired to the corresponding tensile ultimate values. Like derived property grain directions were paired with like tensile property grain directions. Using the following equation

$$R = \bar{r} - \frac{t_{0.95}s}{\sqrt{n}}$$

where R = reduced ratio

$\bar{r}$ = average n ratios

s = standard deviation of the ratios

$t_{0.95}$ = the 0.95 fractile of the t distribution corresponding to n-1 degrees of freedom

n = number of ratios.

A computer program was used to compute the reduced rations. The results of these computations are shown in Tables 28 and 29. Confirming the assumptions made in establishing the test plan, there did not appear to be any significant difference in the reduced ratios for longitudinal and long transverse grain directions; consequently the two grain directions were treated together.

These reduced ratios were utilized to establish design allowable values for the "bearing" properties as follows:

$F_{bru}(L\&T) = R \times F_{tu}(L)$, S basis

$F_{bru}(L\&T)\ (e/D = 1.5)_{H1150} = 1.704 \times 135 = 230$

$F_{bru}(L\&T)\ (e/D = 2.0)_{H1150} = 2.173 \times 135 = 293$

$F_{bry}(L\&T) = R\ F_{ty}(L)$, A or S basis

$F_{bry}(L\&T)\ (e/D = 1.5)_{H1150} = 1.585 \times 105 = 166$

$F_{bry}(L\&T)\ (e/D - 2.0)_{H1150} - 1.914 \times 105 = 201.$

TABLE 28. DETERMINATION OF BUS/TUS REDUCED RATIOS FOR 15-5PH BAR H1150 CONDITION

IDENTIFICATION	TUS	e/D = 1.5 $\frac{BUS}{TUS} \times 100$	e/D = 2.0 $\frac{BUS}{TUS} \times 100$
HT.NO.3X0786 (A) L	134.6	170.1	219.0
HT.NO.3X0786 (A) LT	132.1	171.9	221.3
HT.NO.1W0516 (B) L	133.9	174.7	222.3
HT.NO.1W0516 (B) LT	133.7	173.0	217.6
HT.NO.1W0861 (C) L	138.2	170.5	213.2
HT.NO.1W0861 (C) LT	139.1	171.0	216.8
HT.NO.4X0780 (E) L	135.0	171.6	219.2
HT.NO.3W0523 (F) L	136.9	168.7	216.5
HT.NO.3X0687 (G) L	137.8	172.8	216.5
NUMBER R		9	9
AVG R		171.6	218.6
SUM R		1544.2	1967.3
SUMSQ R		264964.8	430084.5
SDEV R		1.7871	2.0519
SDEV RBAR		0.5957	0.6873
PERCENT		170.4	217.3

TABLE 29. DETERMINATION OF BYS/TYS REDUCED RATIOS FOR 15-5PH BAR H1150 CONDITION

IDENTIFICATION	TYS	e/D = 1.5 $\frac{BYS}{TYS} \times 100$	e/D = 2.0 $\frac{BYS}{TYS} \times 100$
HT.NO.3X0786 (A) L	111.8	160.6	197.8
HT.NO.3X0786 (A) LT	105.7	169.1	203.6
HT.NO.1W0516 (B) L	109.9	169.6	204.4
HT.NO.1W0516 (B) LT	108.4	166.6	203.7
HT.NO.1W0861 (C) L	120.0	158.3	186.7
HT.NO.1W0861 (C) LT	123.5	150.4	183.5
HT.NO.4X0780 (E) L	114.0	160.2	195.0
HT.NO.3W0523 (F) L	108.7	162.8	195.7
HT.NO.3X0687 (G) L	115.9	162.4	193.8
NUMBER R		9	9
AVG R		162.2	195.1
SUM R		1460.1	1765.0
SUMSQ R		237155.2	346592.2
SDEV R		5.9316	7.4163
SDEV RBAR		1.9772	2.4721
PERCENT		158.5	191.4

The F_{tu} and F_{ty} values were obtained from existing MIL-HDBK-5 Table 2.5.6.0(c).

A comparison of the bearing allowables for the H1025 and H1150 conditions is shown below.

	H1025	H1150
F_{bru}, ksi		
(e/D = 1.5)	220	230
(e/D = 2.0)	285	293
F_{bry}, ksi		
(e/D = 1.5)	189	166
(e/D = 2.0)	222	201

The allowables for the H1025 condition are from existing MIL-HDBK-5 Table 2.5.6.0(c). A comparison of the bearing allowables for the two heat treat conditions indicates that the bearing ultimate allowables for the H1150 condition are higher than for the H1025 condition even though the tensile ultimate strength of the H1150 is considerably lower than that of the H1025 condition.

As indicated in the Reference 1 report, the reduced ratios determined for the H1025 condition appeared to be low and an investigation was made at that time to check the bearing strengths which were measured. The test machine was calibrated a second time (after the testing had been completed); the specimen dimensions were rechecked for tolerance conformance; and the entire test setup was rechecked several times with no discrepancies found. Annealed Ti-6Al-6V-2Sn bearing specimens, which were tested at the same time as the 15-5PH specimens, exhibited bearing ratios similar to annealed Ti-6Al-4V.

A comparison of 15-5PH bearing reduced ratios with those for 17-4PH in the H900, H1025, and H1150 conditions and with those for Custom 450 and Custom 455 as determined from tests by Carpenter Technology Corporation, References 10 and 11,

---

(10) Item 75-22, "Additional Data for Custom 455 Bar", Proposal attached to 51st Meeting Agenda, April 1976.

is shown in Table 30. All bearing tests except those for 17-4PH in H900 condition were conducted using "clean pin" conditions. (See bearing test procedure described in Appendix B.) The cleanliness conditions for the tests used to determine the allowables for 17-4PH, H900 condition, are unknown. From this table it can be seen that the reduced ratios for 15-5PH in the H1025 condition are considerably lower than all of the others and appear suspect.

In order to check these low ratios, additional bearing tests were conducted on 15-5PH, H1025 condition, using three of the same heats of bar tested previously. Appropriate lengths of the bars were precipitation heat treated at 1025 F for 4 hours and air cooled in an air furnace to simulate previous procedure. After heat treatment, specimens were machined from the bars at the locations shown in Figures 40 and 41.

Tests were conducted for both e/D = 1.5 and e/D = 2.0 conditions. The results of the mechanical property tests are presented in Table 31. The bearing average and reduced ratios are shown in Tables 32 and 33. The reduced ratios from these tests are much higher than the previous tests and compare closely with those for 17-4PH, H1025 condition.

The configuration of the bearing specimen was changed from that used in the previous investigation, Reference 1, and the bearing hole diameter reduced from 0.375 to 0.250 inch and the width increased from 1-1/4 to 2 inches. However, it is believed that these changes would not cause the large differences in the reduced ratios as evidenced by the fact that the Custom 450 and Custom 455 bearing tests utilized a 0.375-inch-diameter bearing hole.

Although the cause for the differences in the reduced ratios determined in the previous program, Reference 1, and those determined in this test program could not be determined, it is believed that the previously determined reduced ratios are low. Since the resulting design allowable bearing values in MIL-HDBK-5 Table 2.5.6.0(c) for 15-5PH, H1025 condition, are highly conservative, these should be changed so that the bearing allowables for the H1025 condition appear reasonable with respect to those for the H1150 condition.

---

(11) Item 75-23, "Custom 450 Bar", Proposal attached to 51st Meeting Agenda, April 1976.

TABLE 30. COMPARISON OF BEARING STRENGTH REDUCED RATIOS FOR SEVERAL PRECIPITATION HARDENING CORROSION RESISTANT STEELS

	15-5PH		17-4PH			Custom 450		Custom 455	
	H1025[a]	H1150[b]	H900[c]	H1025[b]	H1150[b]	H900[d]	H1050[d]	H950[e]	H1000[e]
F_{bru}, ksi									
(e/D = 1.5)	1.422	1.704	1.647	1.697	1.704	1.664	1.661	1.577	1.621
(e/D = 2.0)	1.840	2.173	2.000	2.146	2.159	2.130	2.132	1.999	2.048
F_{bry}, ksi									
(e/D = 1.5)	1.303	1.585	1.500	1.458	1.526	1.580	1.536	1.481	1.540
(e/D = 2.0)	1.532	1.914	1.647	1.729	1.812	1.939	1.937	1.746	1.855

[a]Ratios from Reference 1.

[b]Ratios determined from this test program

[c]Ratios computed from allowables in MIL-HDBK-5, Table 2.5.6.0(c).

[d]Ratios from Reference 11.

[e]Ratios from Reference 10.

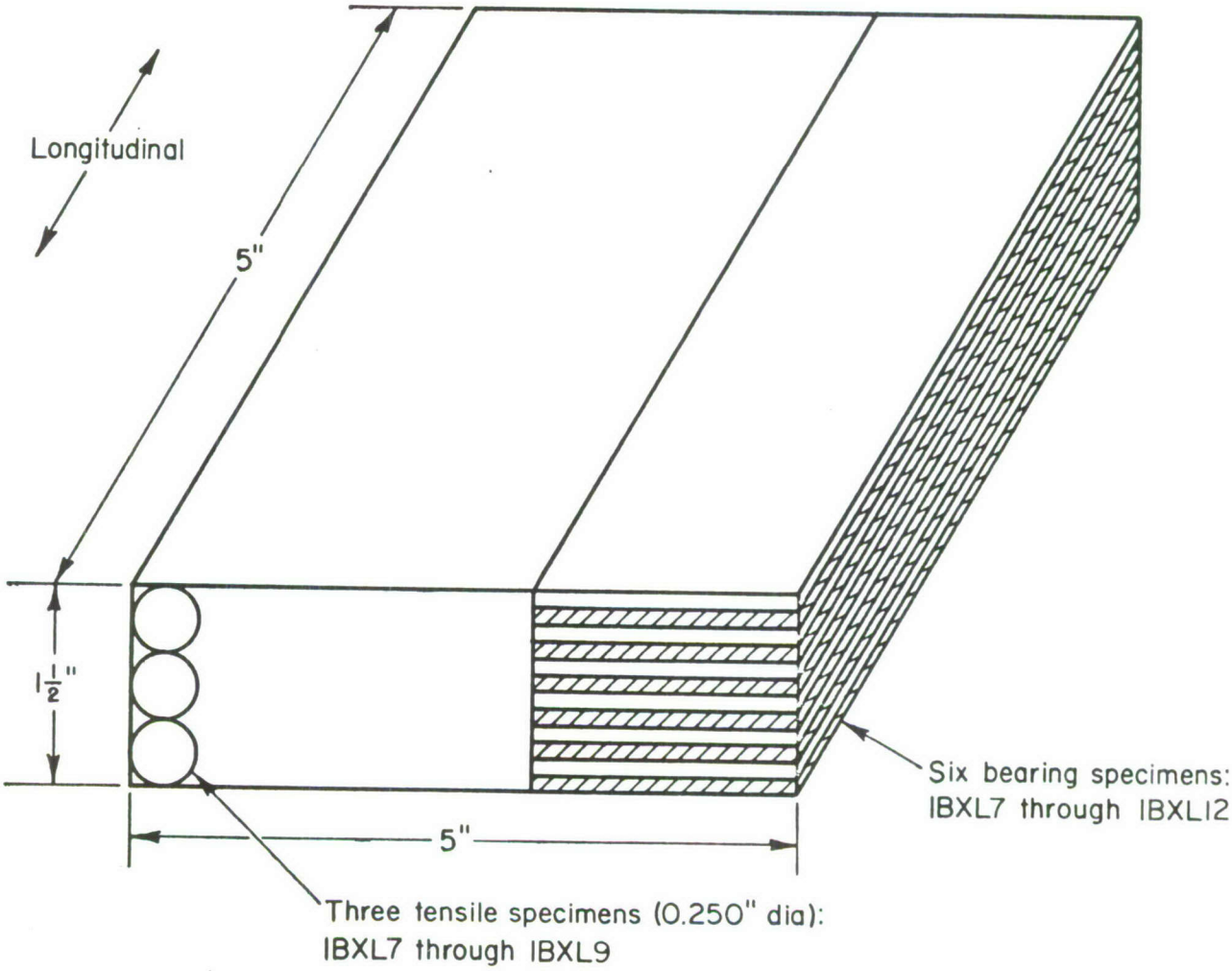

FIGURE 40. LOCATION OF TEST SPECIMENS FOR 15-5PH, H1025-CODE B

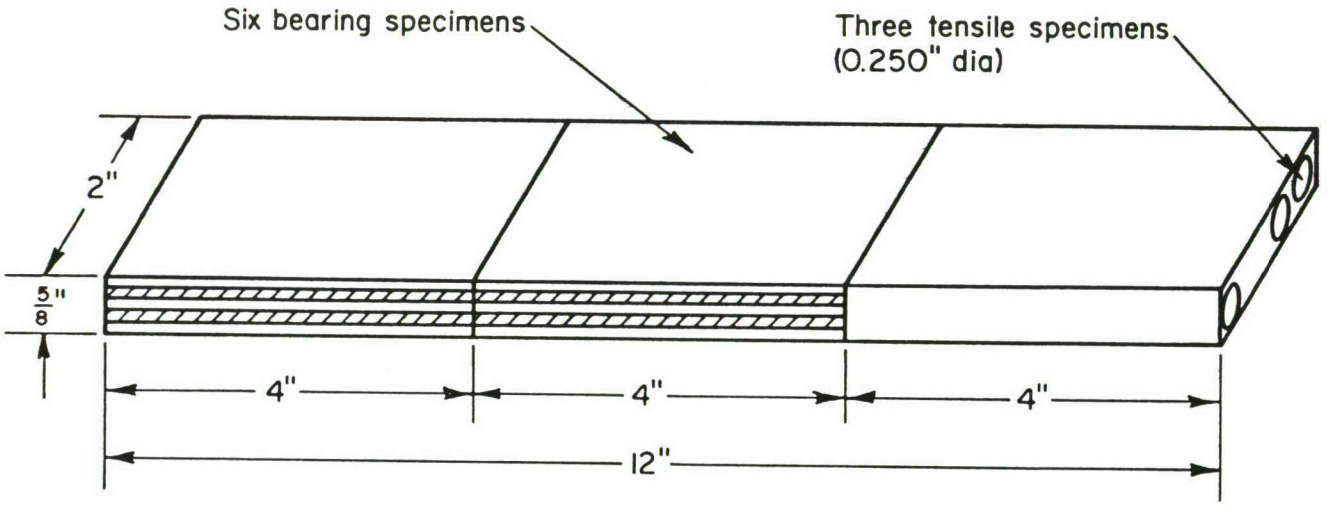

FIGURE 41. LOCATION OF TEST SPECIMENS FOR 15-5PH, H1025-CODE F AND G

TABLE 31. LONGITUDINAL MECHANICAL PROPERTIES 15-5PH BAR CONDITION H1025

Code/ Heat No.	Bar Size	Grain Direction	Specimen Identification	Tension					Bearing			
									e/D = 1.5		e/D = 2.0	
				TUS, ksi	TYS, ksi	e, percent in 4D	RA, percent	E, psi x 10^6	BUS, ksi	BYS, ksi	BUS, ksi	BYS, ksi
B 1W0516	1-1/2" x 5" flat	L	1BXL7	162.7	159.4	17.0	66.0	29.0	282.4	235.2	364.0	288.0
			1BXL8	162.7	159.9	17.0	65.6	29.4	281.2	235.2	366.0	280.0
			1BXL9	163.6	159.7	16.0	64.7	28.8	278.0	232.0	364.0	277.2
			Average	163.0	159.7	16.7	65.4	29.1	280.5	234.1	364.7	281.7
F 3W0523	5/8" x 2" flat	L	1FXL7	158.2	157.6	17.5	68.0	27.3	274.6	232.3	355.4	280.9
			1FXL8	158.0	155.2	17.5	66.6	27.4	272.0	223.6	355.0	280.9
			1FXL9	160.0	159.5	17.0	67.6	27.9	275.7	231.0	355.7	265.5
			Average	158.7	157.4	17.3	67.4	27.5	274.1	229.0	355.4	275.8
G 3X0687	5/8" x 2" flat	L	1GXL7	164.1	161.7	17.0	68.0	28.2	278.1	235.8	361.3	273.4
			1GXL8	162.7	160.1	18.0	68.7	28.7	282.6	237.5	364.4	277.7
			1GXL9	165.5	163.9	16.5	68.7	29.1	282.6	241.5	363.6	279.7
			Average	164.1	161.9	17.2	68.5	28.7	281.1	238.3	363.1	276.9

TABLE 32. DETERMINATION OF BYS/TYS RATIOS FOR 15-5PH BAR H1025 CONDITION

IDENTIFICATION	TYS(L)	e/D = 1.5 $\frac{BYS(L)}{TYS(L)} \times 100$	e/D = 2.0 $\frac{BYS(L)}{TYS(L)} \times 100$
HT.NO.1W0516 (B) LONGITUDINAL	159.7	146.6	176.4
HT.NO.3W0523 (F) LONGITUDINAL	157.4	145.5	175.2
HT.NO.3X0687 (G) LONGITUDINAL	161.9	147.2	171.0
NUMBER R		3	3
AVG R		146.4	174.2
SUM R		439.3	522.6
SUMSQ R		64319.7	91069.2
SDEV R		0.8622	2.8191
SDEV RBAR		0.4978	1.6276
PERCENT		143.3	163.9

TABLE 33.DETERMINATION OF BUS/TUS RATIOS FOR 15-5PH BAR H1025 CONDITION

IDENTIFICATION	TUS(L)	e/D = 1.5 $\frac{BUS(L)}{TUS(L)} \times 100$	e/D = 2.0 $\frac{BUS(L)}{TUS(L)} \times 100$
HT.NO.1W0516 (B) LONGITUDINAL	163.0	172.1	223.7
HT.NO.3W0523 (F) LONGITUDINAL	158.7	172.7	223.9
HT.NO.3X0687 (G) LONGITUDINAL	164.1	171.3	221.3
NUMBER R		3	3
AVG R		172.0	223.0
SUM R		516.1	669.0
SUMSQ R		88787.3	149171.1
SDEV R		0.7104	1.4906
SDEV RBAR		0.4101	0.8606
PERCENT		169.4	217.6

The bearing tests to check the previous data for the H1025 condition were conducted on three heats which constitute insufficient data to meet the MIL-HDBK-5 guidelines for determination of derived properties. However, the average (mean) ratios and standard deviations (variances) for these three heats were very similar to those for 17-4PH, H1025 condition. Consequently, the "F" and "t" tests were conducted to determine if there was any significant difference in the reduced ratios for 17-4PH and 15-5PH, H1025 condition .

The "F" test was used first to determine whether the two sample variances differ (or do not differ) significantly, after which the "t" test was used to evaluate whether the two sample means differ (or do not differ) significantly. The results of the "F" and "t" tests, presented in Table 34, indicated no signiificant difference in the BYS/TYS ratios for 15-5PH and 17-4PH, H1025 condition. The results of the "F" and "t" tests, shown in Table 35, indicated no significant difference in the BUS/TUS ratios for 17-4PH and 15-5PH, H1025 condition, except in the means for e/D = 2.0. Since seven of eight conditions tested showed no significant difference in the bearing ratios for 17-4PH and 15-5PH, H1025 condition, and since for the one exception, the 17-4PH mean percentage (ratio) was lower than the 15-5PH mean percentage (ratio), it is recommended that the reduced ratios determined for 17-4PH, H1025 condition, be used for 15-5PH, H1025 condition.

Consequently, the current bearing design allowables for 15-5PH, H1025 condition, in MIL-HDBK-5 Table 2.5.6.0(c) have been replaced with the bearing allowables determined for 17-4PH, H1025 condition, as determined in this test program. These new bearing allowables for 15-5PH are shown in Table 45.

The effect of elevated temperature on the compressive yield strength was determined in accordance with the guidelines in Section 9.3.1 of MIL-HDBK-5 using the following equation:

$$R = \bar{r} - \frac{t_{0.95}s}{\sqrt{n}}$$

where R = reduced ratio

$\bar{r}$ = mean value of the ratio of the elevated temperature property value to the room temperature property value

s = standard deviation of the ratios

TABLE 34. TESTS OF SIGNIFICANCE FOR BYS/TYS RATIOS

IDENTIFICATION	e/D = 1.5 PERCENT NUMBER	AVERAGE	STD.DEV.	e/D = 2.0 PERCENT NUMBER	AVERAGE	STD.DEV.
15-5PH H1025 BYS/TYS RATIO	3	146.40	0.8620	3	174.20	2.8190
17-4PH H1025 BYS/TYS RATIO	10	147.40	2.7060	10	174.60	2.8420
T = NUMBER OF ITEMS IN GROUP		2.			2.	
DF = NUMBER OF DEGREES OF FREEDOM		11.			11.	
N = HARMONIC MEAN OF N		4.62			4.62	
DX = MAXIMUM DIFFERENCE IN AVERAGES		1.00			0.40	
WV = WEIGHTED VARIANCE		6.1262			8.0533	
WSD = WEIGHTED STANDARD DEVIATION		2.4751			2.8378	
C = BARTLETT BOX		1.2601			1.2601	
CHI SQUARED = 2.3026/C X (X1-X2) =		2.0743			0.0002	
TABULAR VALUE FOR ALPHA =0.05, T-1 = 1		3.84			3.84	
THEREFORE CONCLUDE VARIANCES ARE		EQUAL			EQUAL	
Q(1-ALPHA) = DX/WSD X SQRT(N) =		0.8680			0.3928	
TABULAR VALUE FOR ALPHA =0.05, T,DF= 2,11		3.11			3.11	
THEREFORE CONCLUDE AVERAGES ARE		EQUAL			EQUAL	

TABLE 35. TESTS OF SIGNIFICANCE FOR BUS/TUS RATIOS

IDENTIFICATION	e/D = 1.5 PERCENT NUMBER	AVERAGE	STD.DEV.	e/D = 2.0 PERCENT NUMBER	AVERAGE	STD.DEV.
15-5PH H1025 BUS/TUS RATIO	3	172.00	0.7100	3	223.00	1.4910
17-4PH H1025 BUS/TUS RATIO	10	170.60	1.5360	10	215.70	1.8850
T = NUMBER OF ITEMS IN GROUP		2.			2.	
DF = NUMBER OF DEGREES OF FREEDOM		11.			11.	
N' = HARMONIC MEAN OF N		4.62			4.62	
DX = MAXIMUM DIFFERENCE IN AVERAGES		1.40			7.30	
WV = WEIGHTED VARIANCE		2.0220			3.3114	
WSD = WEIGHTED STANDARD DEVIATION		1.4220			1.8197	
C = BARTLETT #C#		1.2601			1.2601	
CHI SQUARED = 2.3026/C X (X1-X2) =		1.1028			0.1290	
TABULAR VALUE FOR ALPHA =0.05, T-1 = 1		3.84			3.84	
THEREFORE CONCLUDE VARIANCES ARE		EQUAL			EQUAL	
Q(1-ALPHA) = DX/WSD X SQRT(N) =		2.1152			8.6183	
TABULAR VALUE FOR ALPHA =0.05, T,DF= 2,11		3.11			3.11	
THEREFORE CONCLUDE AVERAGES ARE		EQUAL			UNEQUAL	

$t_{0.95}$ = the 0.95 fractile of the t distribution corresponding to n-1 degrees of freedom

n = number of ratios in the sample.

A computer program was used to compute the reduced ratios. The results of these computations are shown in Table 36 for the H1025 condition and in Table 37 for the H1150 condition. Working curves, Figures 42 and 43, were drawn through 100 percent at room temperature not not higher than the computed reduced ratios (R) shown in Tables 36 and 37 for each temperature. Finished curves were prepared in MIL-HDBK-5 format as shown in Figures 45 and 46.

The compressive modulus of elasticity data in Table 26 and 27 as well as data from References 1 and 9 were employed to establish the effect of temperature on the compressive modulus. Individual average ratios of $\frac{\text{elevated temperature, } E_c}{\text{room temperature, } E_c}$ for the H1025 condition and for the H1150 condition are presented in Table 38. Since the compressive modulus is not expected to vary with heat treat condition, the data were combined with the overall average ratios at each temperature shown in Table 38. A working curve, Figure 44, was drawn through 100 percent at room temperature and not higher than the average percentage shown in Table 38.

Although the average ratios indicated 100 percent at 400 F and 96.2 at 700 F, the elevated temperature compressive modulus curve was drawn conservatively below these values based upon shape of elevated temperature compressive modulus curves for other similar precipitation hardening stainless steels. The finished curve prepared in MIL-HDBK-5 format is shown in Figure 47.

MIL-HDBK-5 currently contains longitudinal and long transverse compressive stress-strain and tangent-modulus curves at room temperature for the H1025 and H1150 conditions. In order to determine typical elevated temperature compressive stress-strain curves for the H1025 and H1150 conditions, the load-strain curves obtained from compression tests were used to determine the Ramberg-Osgood shape parameter, n, employing the graphical procedure described in Chapter 9, Section 9.3.2.4 of MIL-HDBK-5. The average Ramberg-Osgood parameter for each heat from Tables 26 and 27 as well as those from References 1 and 9 were utilized to determine an overall average shape parameter for each temperature and

TABLE 36. EFFECT OF TEMPERATURE ON CYS FOR 15-5PH BAR H1025 CONDITION

IDENTIFICATION	RT AVG	Percent R-T at Indicated Temperature 400F	700F	900F
HT.NO.1W0516 (B) L	150.3	86.9	78.0	66.7
HT.NO.1W0861 (C) L	162.0	87.9	79.2	66.1
HT.NO.4X0780 (E) L	161.9	87.2	78.4	67.3
HT.NO.4W0370 L REF 9	168.7	85.8	77.1	66.2
HT.NO.4W0370 LT REF 9	165.3	87.1	78.6	67.2
NUMBER R		5	5	5
AVG R		87.0	78.3	66.7
SUM R		434.8	391.4	333.5
SUMSQ R		37819.7	30639.3	22243.9
SDEV R		0.7678	0.7980	0.5430
SDEV RBAR		0.3433	0.3569	0.2428
PERCENT RT		86.2	77.4	66.1

TABLE 37.EFFECT OF TEMPERATURE ON CYS FOR 15-5PH BAR H1150 CONDITION

IDENTIFICATION	RT AVG	Percent R-T at Indicated Temperature 400F	700F	900F
HT.NO.1W0516 (B) L	115.6	96.5	89.4	78.5
HT.NO.4X0780 (E) L	121.7	93.2	85.0	75.7
HT.NO.3X0785 L REF 1	109.6	98.9	92.3	83.8
HT.NO.3W0523 L REF 1	111.4	98.4	89.9	82.5
HT.NO.3X0687 L REF 1	118.7	99.0	88.0	78.1
NUMBER R		5	5	5
AVG R		97.2	89.1	79.7
SUM R		486.0	445.6	398.5
SUMSQ R		47262.9	39737.8	31803.2
SDEV R		2.4549	2.3395	3.3384
SDEV RBAR		1.0979	1.0462	1.4930
PERCENT RT		94.6	85.7	76.2

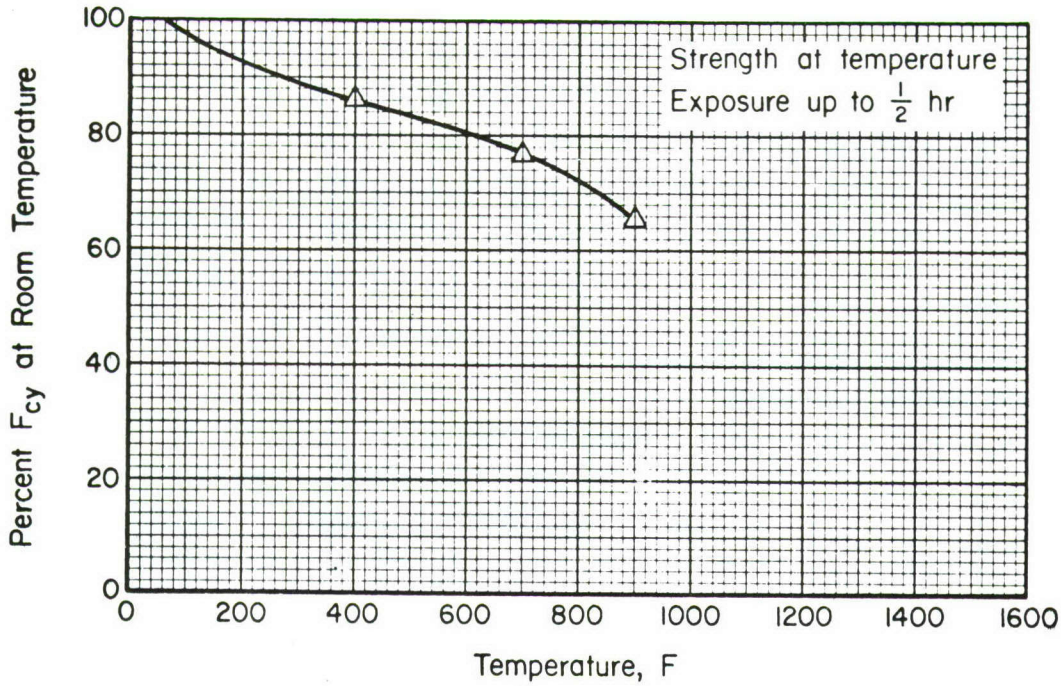

FIGURE 42. WORKING CURVE SHOWING EFFECT OF TEMPERATURE ON COMPRESSIVE YIELD STRENGTH (F_{cy}) OF 15-5PH (H1025) STAINLESS STEEL BAR

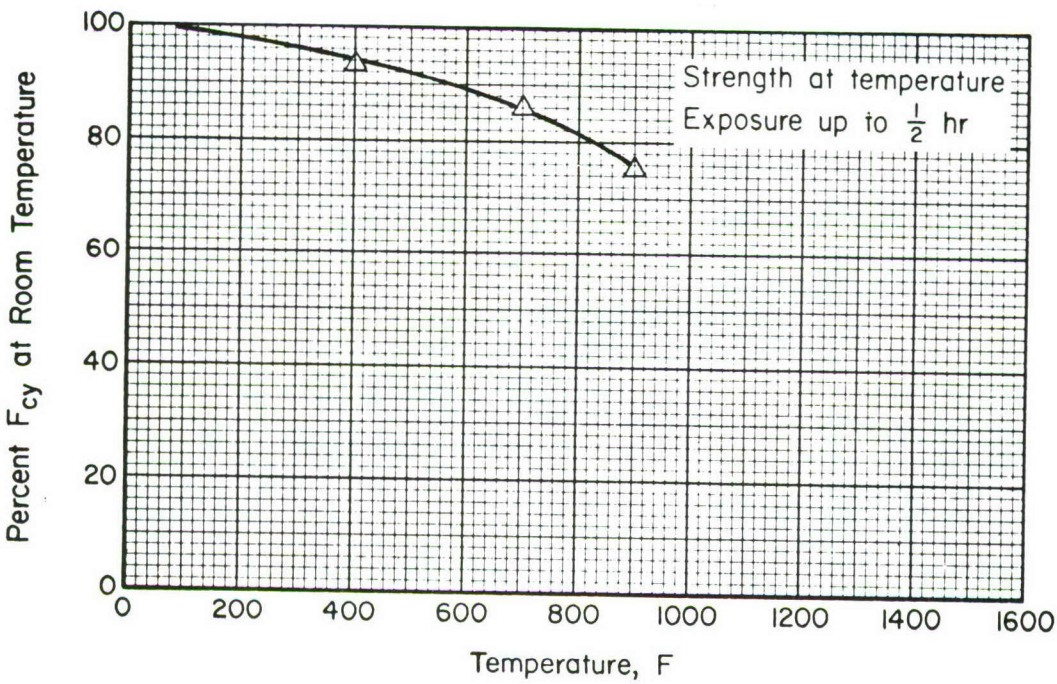

FIGURE 43. WORKING CURVE SHOWING EFFECT OF TEMPERATURE ON COMPRESSIVE YIELD STRENGTH (F_{cy}) OF 15-5PH (H1150) STAINLESS STEEL BAR

TABLE 38. EFFECT OF TEMPERATURE ON COMPRESSIVE MODULUS FOR 15-5PH BAR

IDENTIFICATION			RT AVG	Percent R-T at Indicated Temperature 400F	700F	900F
HT.NO.1W0516 (B) L		H1025	27.8	107.9	99.6	77.7
HT.NO.1W0861 (C) L		H1025	27.8	110.1	112.2	85.3
HT.NO.4X0780 (E) L		H1025	28.7	95.5	94.8	82.9
HT.NO.4W0370	L REF 9	H1025	30.2	95.4	91.7	80.8
HT.NO.4W0370	LT REF 9	H1025	30.3	95.4	92.7	80.9
HT.NO.1W0516 (B) L		H1150	26.3	105.3	104.6	81.0
HT.NO.4X0780 (E) L		H1150	26.5	104.5	100.8	91.3
HT.NO.3X0786	L REF 1	H1150	26.7	97.0	92.9	83.5
HT.NO.3W0523	L REF 1	H1150	27.5	95.3	86.9	82.2
HT.NO.3X0687	L REF 1	H1150	28.9	94.1	85.5	82.4
		NUMBER R		10	10	10
		AVG R		100.0	96.2	82.8

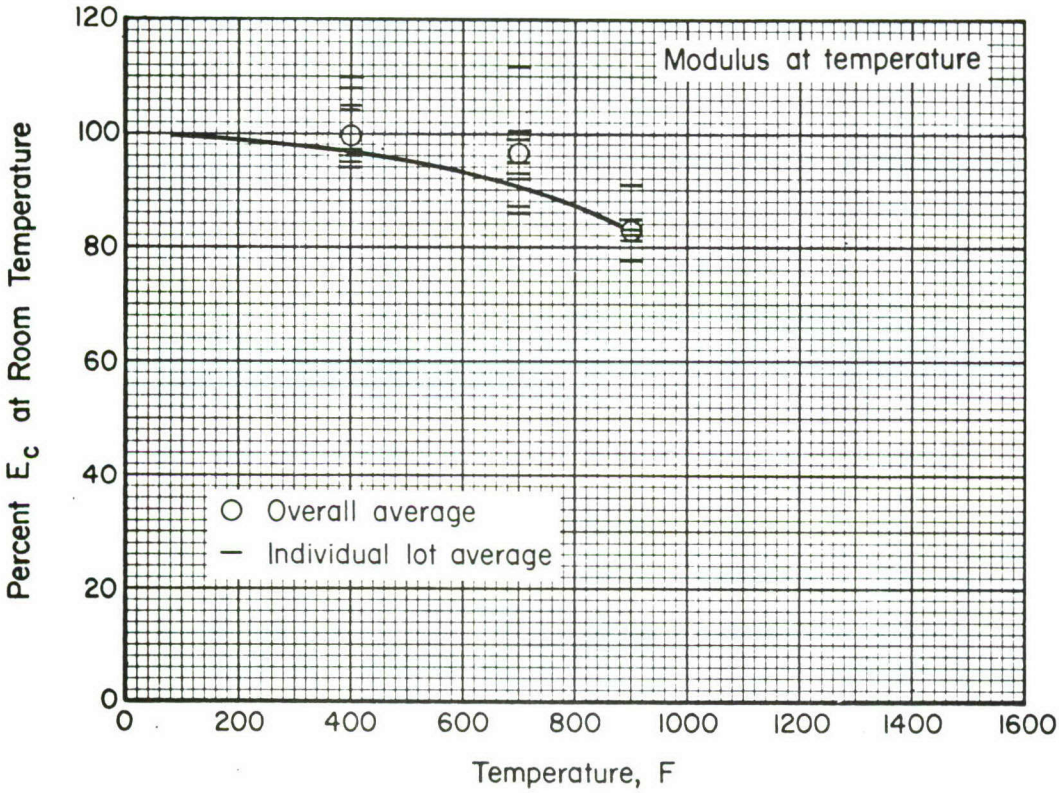

FIGURE 44. WORKING CURVE SHOWING EFFECT OF TEMPERATURE ON COMPRESSIVE MODULUS (E_c) of 15-5PH STAINLESS STEEL

grain direction as shown in Tables 39 and 40. A minimum of three heats were used for these determinations in accordance with the requirements of Section 9.3.2.2 in MIL-HDBK-5.

Using the Ramberg-Osgood equation,

$$e_{total} = e_{elastic} + e_{plastic}$$

$$e_{total} = \frac{f}{E} + kf^n$$

where e_{total} = total strain

f = stress

k = constant

E = modulus of elasticity

n = Ramberg-Osgood parameter,

since

$$e_{plastic} = kf^n$$

$$k = \frac{e_{plastic}}{f^n} = \frac{0.002}{TYS^n}$$

substituting

$$e_{total} = \frac{f}{E} + \frac{0.002f^n}{TYS^n} \quad .$$

A computer program was utilized to plot typical stress-strain curves using typical values for E_c, n, and CYS. For the H1025 condition, the typical compressive yield strength was computed as the product of the typical room temperature tensile yield strength, 165 ksi, from Reference 12 , the $\frac{CYS}{TYS}$ ratio of $\frac{143}{145}$ from MIL-HDBK-5 Table 2.5.6.0(c) and the percentage from the elevated temperature compressive yield strength curve in Figure 45. The typical compressive moduli were based on the typical room temperature compressive modulus from MIL-HDBK-5 Table 2.5.6.0(c)

---

(12) "Armco 15-5PH VAC CE Precipitation-Hardening Stainless Steel Bar and Wire", Armco Product Data Bulletin 5-21b (no date).

TABLE 39. DETERMINATION OF RAMBERG-OSGOOD PARAMETERS FOR LONGITUDINAL COMPRESSIVE STRESS-STRAIN CURVES FOR 15-5PH BAR H1025

Heat No.	Size, inches	Reference	n			
			RT	400 F	700 F	900 F
3X0786	5-1/2 rd.	(1)	21	--	--	--
1W0516	1-1/2 x 5	--	19	18	14	12
1W0861	1-1/2 x 7.7	--	20	16	8	8
4X0780	1-1/2 x 3	--	22	16	13	12
4W0370	2 x 6	(9)	27	22	15	11
Average			22	18	12	11

TABLE 40. DETERMINATION OF ROOM TEMPERATURE OF RAMBERG-OSGOOD PARAMETERS FOR LONG TRANSVERSE COMPRESSIVE STRESS-STRAIN CURVES FOR 15-5PH BAR H1025

Heat No.	Size, inches	Reference	n
3X0786	5-1/2 rd.	(1)	22
1W0516	1-1/2 x 5	(1)	20
1W0861	1-1/2 x 7.7	(1)	20
4W0370	2 x 6	(9)	19
Average			20

of 29.2 x 10^3 ksi and the percentage from the elevated temperature compressive modulus curve in Figure 47. The Ramberg-Osgood parameters were taken from Tables 39 and 40. The parameters used to construct the compressive yield strength curves for the H1025 condition are shown in Table 41.

Similarly, for the H1150 condition, the typical compressive yield strength was computed as the product of the typical room temperature tensile yield strength, 125 ksi, from Reference 12, the $\frac{CYS}{TYS}$ ratio of $\frac{99}{105}$ from MIL-HDBK-5 Table 2.5.6.0(c) and the percentage from the elevated temperature compressive yield curve in Figure 46. The typical compressive moduli were based on the typical room temperature compressive modulus from MIL-HDBK-5 Table 2.5.6.0(c) of 29.2 x 10^3 ksi and the percentage from the elevated temperature compressive modulus curve in Figure 47. The Ramberg-Osgood parameters were taken from Tables 42 and 43. The parameters used to construct the compressive yield strength curves for the H1150 condition are shown in Table 44.

Compressive tangent modulus curves were also constructed utilizing the above parameters and the following equation:

$$E_{tan} = \frac{1}{\frac{1}{E} + nKf^{n-1}}$$

where tangent modulus is the first derivative of stress with respect to strain, df/de. Compressive stress-strain and tangent modulus curves for both the H1025 and H1150 conditions are shown in Figures 48 and 49. Existing MIL-HDBK-5 Figure 2.5.6.1.6(b) has been replaced with new Figure 50.

Summary – Room temperature F_{bru} and F_{bry} values for H1150 condition as well as new bearing values for H1025 condition have been established. MIL-HDBK-5 Table 2.5.6.0(c) has been revised as shown in Table 45 to include these data. Elevated temperature compressive yield strength curves for the H1025 and H1150 conditions and elevated temperature tensile and compressive moduli have been constructed as shown in Figures 45 through 46. Room and elevated temperature longitudinal compressive stress-strain and tangent modulus curves have been constructed for H1025 and H1150 conditions, Figures 48 and 49. Room temperature long transverse compressive stress-strain and tangent modulus curves were also established in Figure 50.

TABLE 41. PARAMETERS FOR CONSTRUCTION OF TYPICAL COMPRESSIVE STRESS-STRAIN AND TANGENT MODULUS CURVES FOR 15-5PH H1025 CONDITION

Test Temperature, F	Compressive Yield Strength, ksi	Ramberg-Osgood Parameter, n	Compressive Modulus, ksi x 10^3
	Longitudinal		
RT	163	22	29.2
400	140	18	28.0
700	125	12	26.3
900	107	11	24.2
	Long Transverse		
RT	163	20	29.2

TABLE 42. DETERMINATION OF RAMBERG-OSGOOD PARAMETERS FOR LONGITUDINAL COMPRESSIVE STRESS-STRAIN CURVES FOR 15-5PH BAR H1150 CONDITION

Heat No.	Size, inches	Reference	n			
			RT	400 F	700 F	900 F
3X0786	5-1/2 rd.	(1)	5.9	5.4	5.8	8.3
1W0516	1-1/2 x 5	-	9.0	16.0	15.0	14.0
1W0861	1-1/2 x 7.7	(1)	9.6	-	-	-
4X0780	1-1/2 x 3	-	9.0	21.0	15.0	10.0
3W0523	5/8 x 2	(1)	8.6	8.5	6.3	5.6
3X0687	5/8 x 2	(1)	9.2	21.0	18.0	12.0
Average			8.5	14.4	12.0	10.0

TABLE 43. DETERMINATION OF ROOM TEMPERATURE OF RAMBERG-OSGOOD PARAMETER FOR LONG TRANSVERSE COMPRESSIVE STRESS-STRAIN CURVES FOR 15-5PH BAR H1150

Heat No.	Size, inches	Reference	n
3X0786	5-1/2 rd.	(1)	5.2
1W0516	1-1/2 x 5	(1)	10.0
1W0861	1-1/2 x 7.7	(1)	8.3
			7.8

TABLE 44. PARAMETERS FOR CONSTRUCTION OF TYPICAL COMPRESSIVE STRESS-STRAIN AND TANGENT MODULUS CURVES FOR 15-5PH BAR, H1150 CONDITION

Test Temperature, F	Compressive Yield Strength, ksi	Ramberg-Osgood Parameter, n	Compressive Modulus, ksi x 10^3
	Longitudinal		
RT	121	8.5	29.2
400	114	14	28.0
700	104	12	26.3
900	92	10	24.2
	Long Transverse		
RT	121	7.8	29.2

TABLE 45. PROPOSED MIL-HDBK-5 TABLE 2.5.6.0(c)

TABLE 2.5.6.0(c). *Design Mechanical and Physical Properties of 15-5 PH Stainless Steel* (Bars and Forgings)

Specification	AMS 5659						
Form	Bars and forgings						
Condition	H900	H925	H1025	H1075	H1100	H1150	H1150M
Thickness or diameter, in.	< 12	< 12	< 12	< 12	< 12	< 12	< 12
Basis	S	S[a]	S[a]	S[a]	S[a]	S[a]	S[a]
Mechanical properties:							
F_{tu}, ksi:							
L	190	170	155	145	140	135	115
T	190	170	155	145	140	135	115
F_{ty}, ksi:							
L	170	155	145	125	115	105	75
T	170	155	145	125	115	105	75
F_{cy}, ksi:							
L	...	...	143	...	...	99	...
T	...	...	143	...	...	99	...
F_{su}, ksi	...	...	97	...	...	85	...
F_{bru},[b] ksi:							
(e/D = 1.5)	...	...	263	...	...	230	...
(e/D = 2.0)	...	...	332	...	...	293	...
F_{bry},[b] ksi:							
(e/D = 1.5)	...	...	211	...	...	166	...
(e/D = 2.0)	...	...	250	...	...	201	...
e, percent:							
L	10	10	12	13	14	16	18
T	6	7	8	9	10	11	14
E, 10^3 ksi	28.5						
E_c, 10^3 ksi	29.2						
G, 10^3 ksi	11.2						
μ	0.272						
Physical properties:							
ω, lb/in.^{3}	0.283						
C, Btu/(lb)(F)	....						
K, Btu[(hr)(ft^2)(F)/ft]	See Figure 2.5.6.0						
α, 10^{-6}in./in./F	See Figure 2.5.6.0						

[a]Only the H900 condition is presently covered by AMS 5659. Properties for other conditions reflect producers guaranteed minimum tensile properties.

[b]Bearing values are "dry pin" values per Section 1.4.7.1.

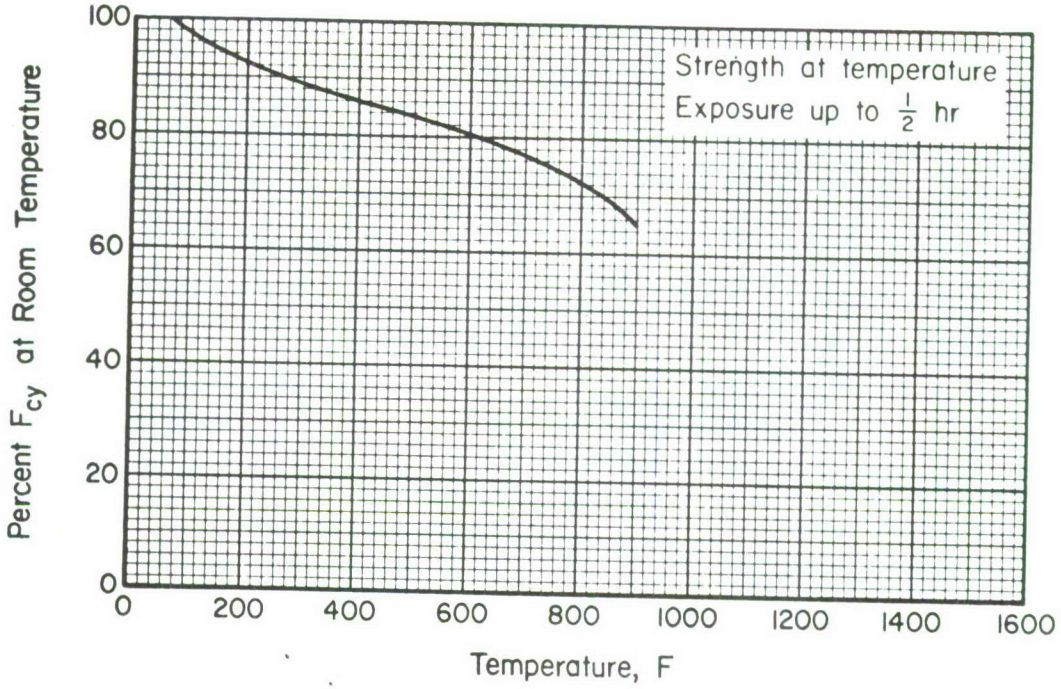

FIGURE 2.5.6.2.2. Effect of temperature on the compressive yield strength (F_{cy}) of 15-5PH (H1025) stainless steel bar.

FIGURE 45. PROPOSED MIL-HDBK-5 FIGURE 2.5.6.2.2.

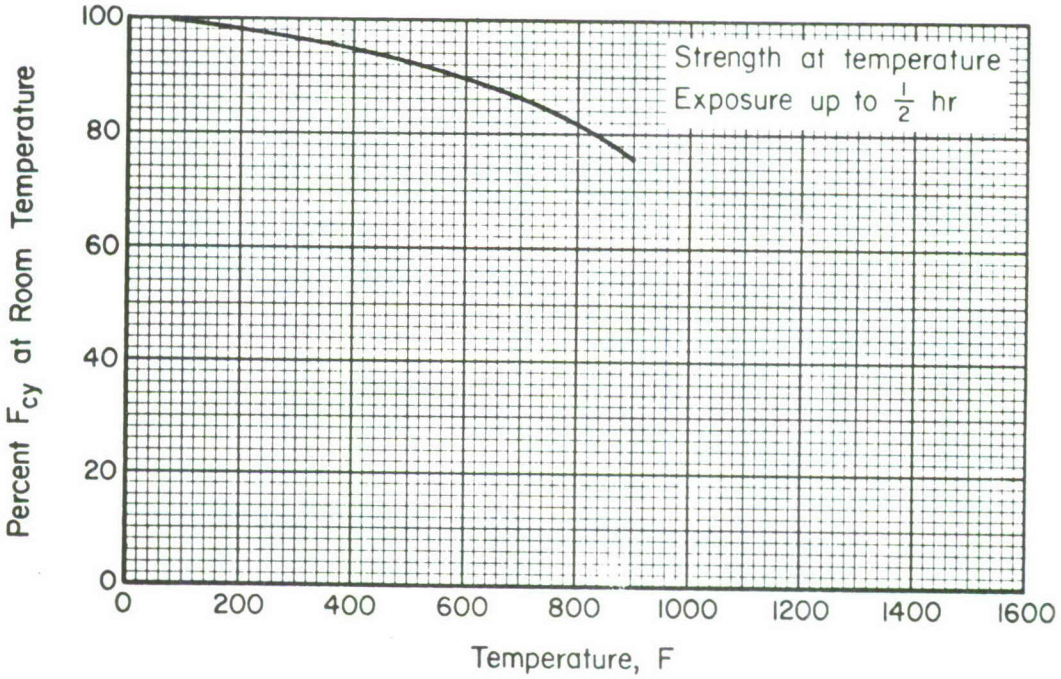

FIGURE 2.5.6.3.2. Effect of temperature on the compressive yield strength (F_{cy}) of 15-5PH (H1150) stainless steel bar.

FIGURE 46. PROPOSED MIL-HDBK-5 FIGURE 2.5.6.3.2.

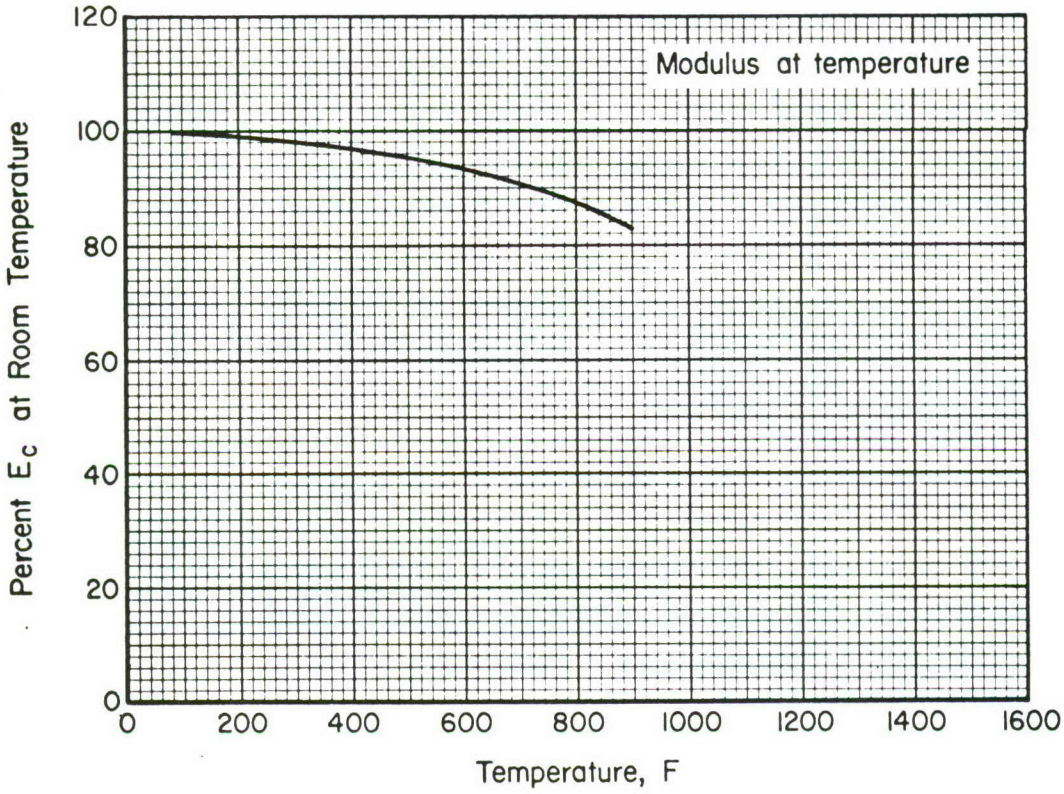

FIGURE 2.5.6.1.4. Effect of temperature on the tensile and compressive moduli (E and E_c) of 15-5PH stainless steel.

FIGURE 47. PROPOSED MIL-HDBK-5 FIGURE 2.5.6.1.4.

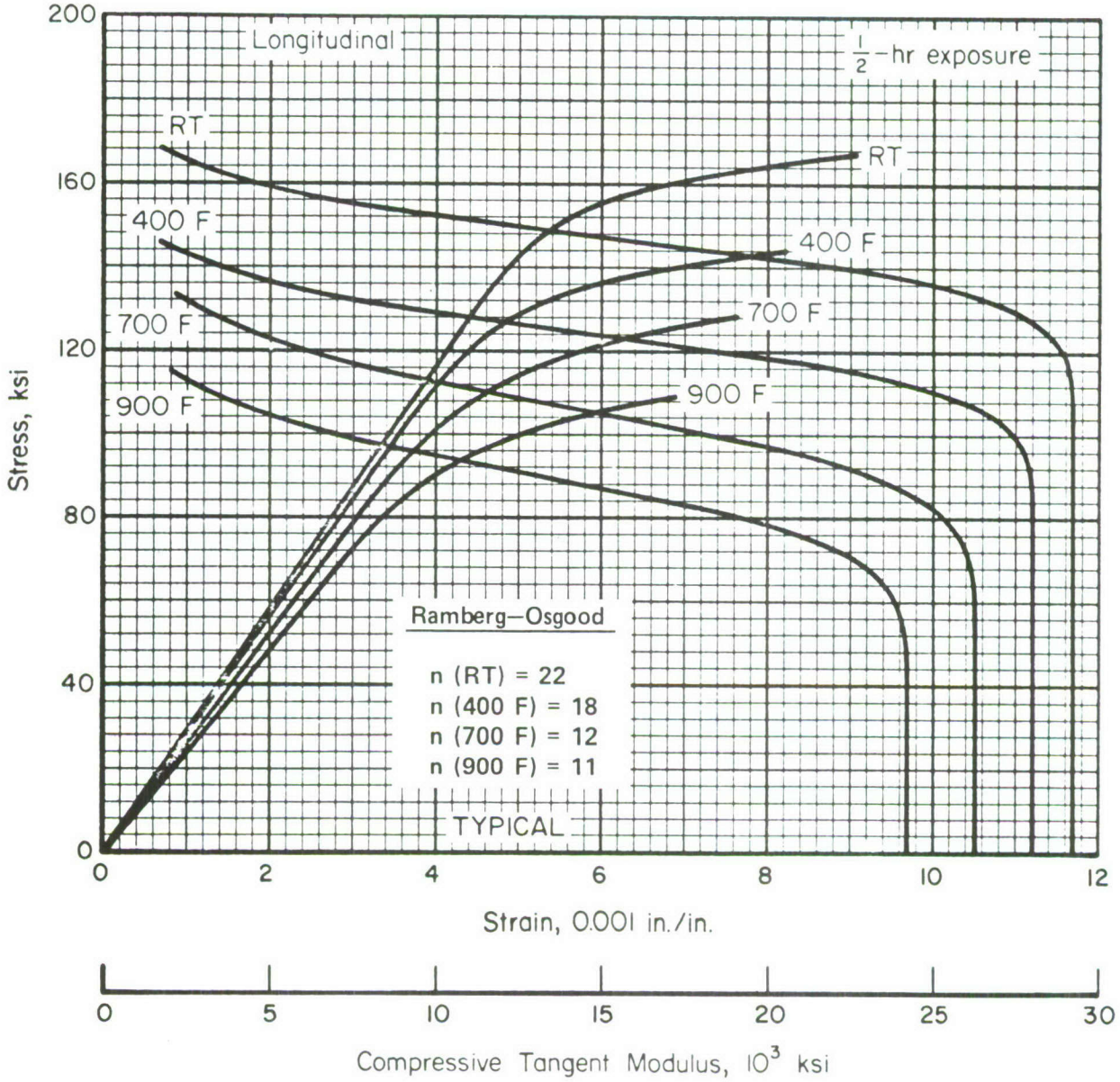

FIGURE 2.5.6.2.6(a). Typical compressive stress-strain and tangent-modulus curves at various temperatures for 15-5PH (H1025) stainless steel bar.

FIGURE 48. PROPOSED MIL-HDBK-5 FIGURE 2.5.6.2.6(a)

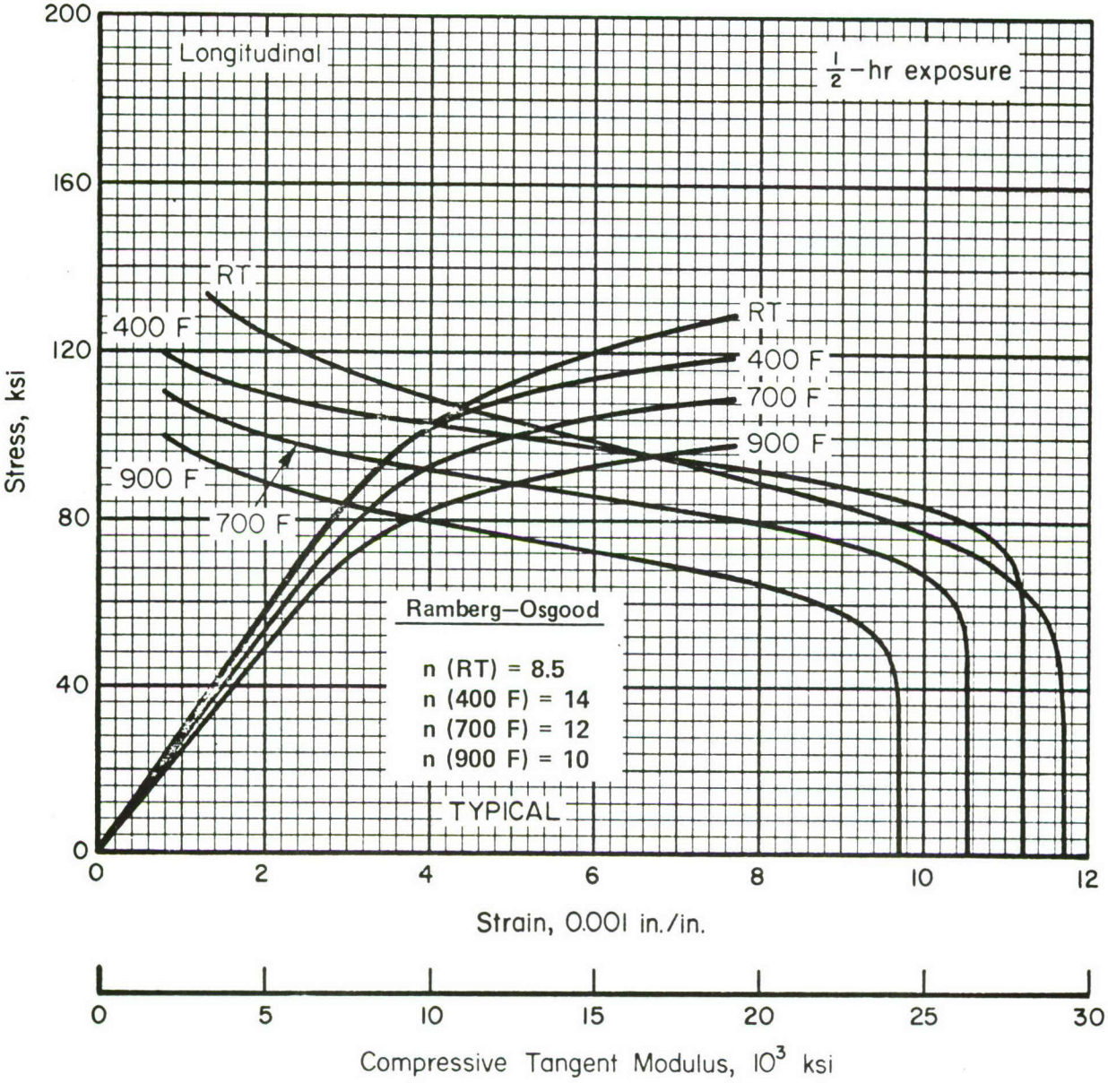

FIGURE 2.5.6.3.6(a). Typical compressive stress-strain and tangent-modulus curves at various temperatures for 15-5PH (H1150) stainless steel bar.

FIGURE 49. PROPOSED MIL-HDBK-5 FIGURE 2.5.6.3.6(a)

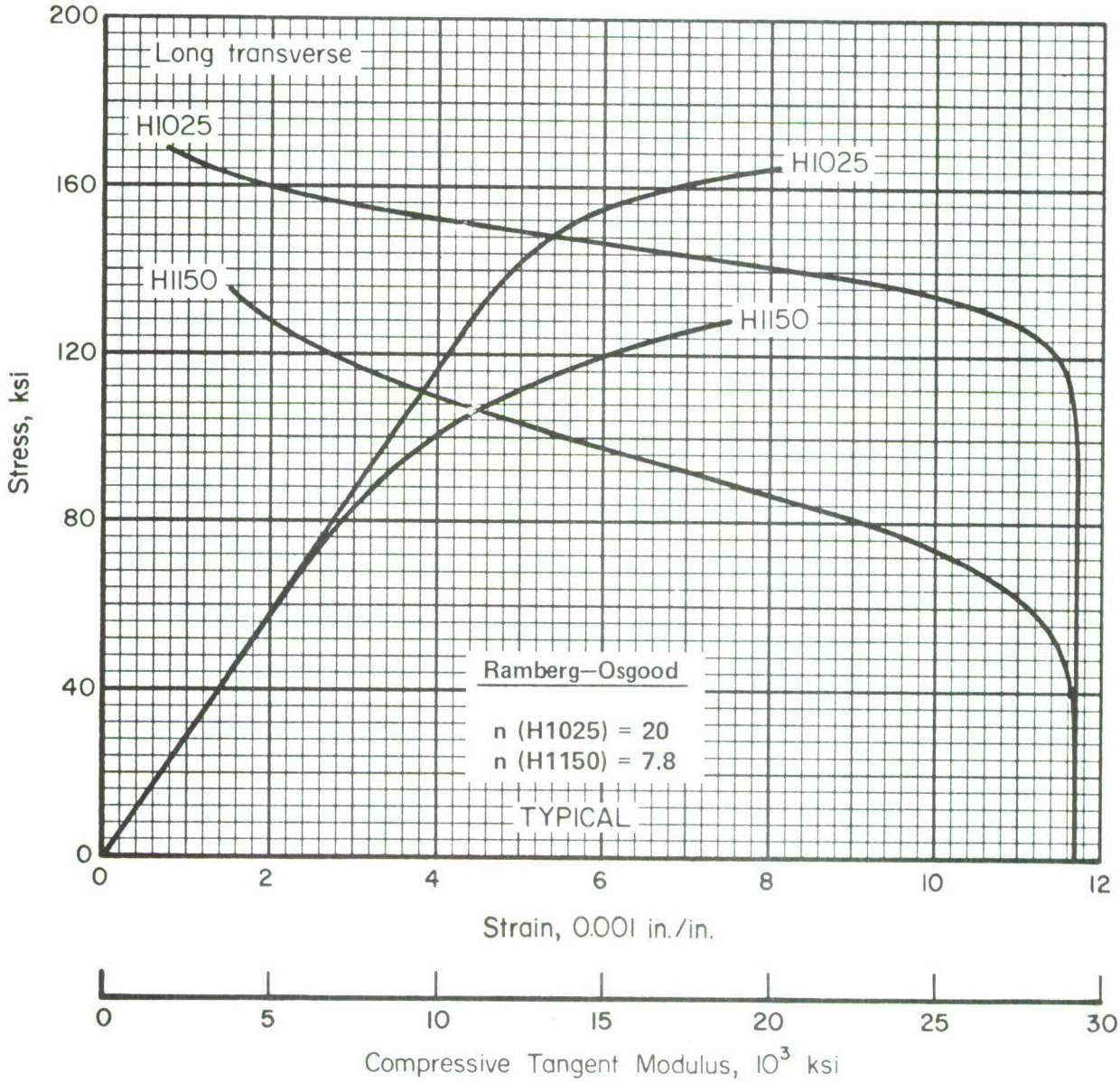

FIGURE 2.5.6.1.6(b). Typical compressive stress-strain and tangent-modulus curves at room temperature for various heat-treated conditions of 15-5PH stainless steel bar.

FIGURE 50. PROPOSED MIL-HDBK-5 FIGURE 2.5.6.1.6(b)

Threshold ΔK and Low da/dN Evaluations

Background—The presentation of fatigue crack growth rate data as ΔK versus da/dN requires the generation and presentation of threshold ΔK and low da/dN behavior data. These data should also span cyclic stress ratios, R, typical of fatigue loadings imposed on aerospace structures. In this initial program, three new aluminum alloys or heat treatments were selected for evaluation. These alloys were 7075-T7351, 7475-T7351, and 2124-T851. The generated data were to be presented in a form compatable with MIL-HDBK-5 guidelines for fatigue crack growth rate data presentation(13). In addition, the "tail-end" data points of the low da/dN behavior were to tie-in with the intermediate data for these alloys as presented in Reference 14.

Test Plan—The test plan and experimental matrix were constructed to evaluate low da/dN behavior at R ratios of 0.500, 0.250, and 0.100. The variation of threshold ΔK with R ratio was also to be evaluated. The following table describes the experimental variables of the test plan for seven specimens of each aluminum alloy.

TABLE 46. TEST PLAN

Specimen Numbers	R Ratio	Data Generated
1, 2, 3	0.500, 0.250, 0.100	ΔK_{th} and low da/dN
4	0.500, 0.250, 0.100	ΔK_{th} verification
5, 6, 7	0.500, 0.250, 0.100	Intermediate da/dN

(13) Item 74-14, "Guidelines for Presentation of Fatigue Crack Propagation Data", Proposal attached to 52nd MIL-HDBK-5 Meeting Agenda, April 1976.

(14) "Damage Tolerant Design Handbook", Battelle MCIC-HB-01.

Materials—The aluminum alloy 7075-T7351 plate was originally purchased from Alcoa as 7075-T7651. The material was aged to the T7351 condition. Specimens were fabricated from the remaining material used in another BCL program as reported in Reference 15. Aluminum alloy 7475 plate, as used in the F-16 lower wing skins, was received in the T7651 condition from General Dynamics. The 25 x 48 x 0.520-inch section was cut from Alcoa plate 170-096 and heat treated to the T7351 condition by aging at 350 F for 3½ hours. The 2124-T851 plate, as used in the F-16 wing carry-through bulkheads, was received in a section size of 36 x 16 x 5.5 inches from General Dynamics. The parent plate identification is Alcoa plate 448-131. All materials were supplied at no cost to the contract.

Specimen Configurations—Four specimen configurations were utilized in this experimental phase to generate da/dN data at the low and intermediate ranges. These specimen configurations are shown in Figures A-9 and A-10 of Appendix A. The specimen configurations were multiflawed through-the-thickness center crack panels. The two specimen widths of 6.0 inches and 4.0 inches were selected for low and intermediate da/dN testing in a 25 kip electrohydraulic fatigue machine. The 7075-T7351 and 7475-T7351 panels were of the configuration as shown in Figure A-9 with four cracks. The 2124-T851 panels were of the configurations as shown in Figure A-10 with three cracks. The cracks were initially sharp, diamond shaped flaws, 0.625 inches long and equally spaced at a distance to avoid interaction of fatigue crack growth behavior and associated crack tip stress fields.

The 7075-T7351 and 7475-T7351 panels were of LT direction, whereas the 2124-T851 panesl were of TL direction. The first four panels (0.500 inch thickness) of 2124-T851 for low da/dN testing were fabricated from the quarter thickness area of the original 5.5 inch thick plate. The three panels for intermediate da/dN testing were fabricated from the surface thickness area.

Fatigue Crack Propagation Results and Discussion—The fatigue crack propagation test results of each panel for each aluminum alloy are presented in tabular and graphical form. The crack-length-cycles data are presented in

---

(15) Feddersen, C. E., and Hyler, W. S., "Fracture and Fatigue-Crack-Propagation Characteristics of 7075-T7351 Aluminum Alloy Sheet and Plate", Battelle Report G-8902 to NADC, March 1970.

Appendix C. In each table is also shown the fatigue crack growth rate and stress intensity level calculations. Each table contains data for a given R ratio with both the low and intermediate rates. Data for 7075-T7351 are presented in Tables C-1, C-2, and C-3. The data for 7475-T7351 are presented in Tables C-4, C-5, and C-6. Tables C-7 through C-10 contain data for 2124-T851.

The crack-length-cycles data at each R ratio for each alloy were plotted. The behavior of each crack is shown in each plot. Fatigue crack growth rates at R = 0.500, 0.250, and 0.100 for 7075-T7351 are shown in Figures 51 through 54. The behavior curves for 7475-T7351 are shown in Figures 55 through 58. Figures 59 through 62 show the fatigue crack growth behavior for 2124-T851 at R = 0.500, 0.250, 0.100, and 0.070.

Fatigue crack propagation rates, at each R ratio for each alloy are presented in graphical form according to MIL-HDBK-5 guidelines of Reference 13. All data points have been presented in the unscreened form. Figures 63, 64, and 65 show the ΔK versus da/dN data for 7075-T7351. The data for 7475-T7351 are shown in Figures 66, 67, and 68. Figures 69, 70, and 71 show the ΔK versus da/dN data for 2124-T851 at R = 0.500, 0.250, and 0.100.

The stress intensity level of each crack was determined by the center-cracked formula with the secant finite width correction. That is,

$$\Delta K = \Delta\sigma\sqrt{\pi a}\,[\sec \frac{\pi a}{w}]^{\frac{1}{2}} \quad .$$

Corresponding plotted da/dN values were those determined from the three-point divided difference method. The curves in each set of data are the average behavior lines drawn through the data. No attempts were made to fit a fatigue crack growth rate equation to the rate behavior.

Composite plots of the low and intermediate da/dN data for each R ratio are presented in Figures 72, 73, and 74. The effect of the R ratio is less pronounced in the region of low da/dN.

The threshold ΔK determination was quite complex. At each R ratio the data was analyzed to determine the threshold ΔK for that test. A summary of the ΔK_{th} values are shown in Table 47. The method of selection of the

(13) Item 74-14, op.cit.

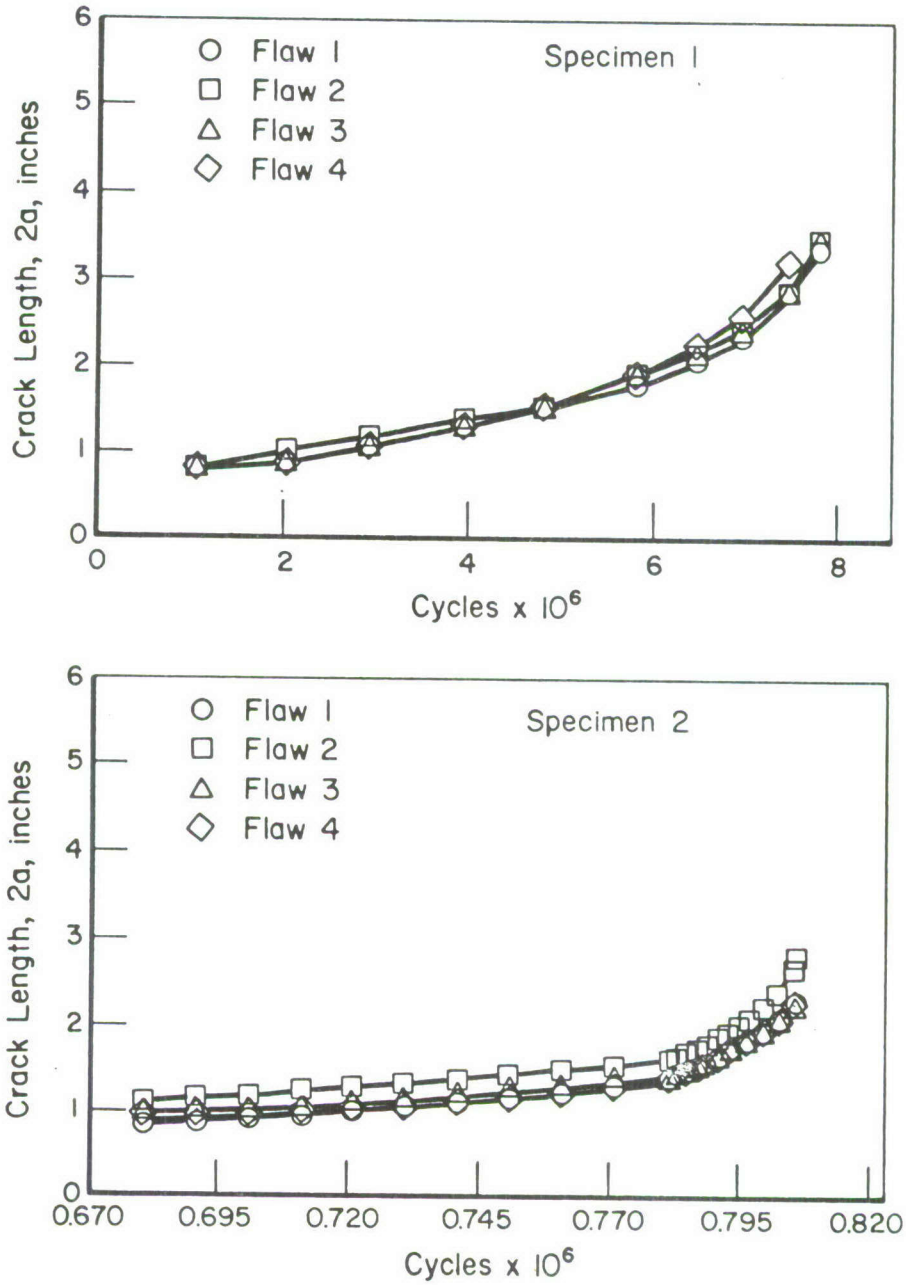

FIGURE 51. CRACK LENGTH-CYCLES BEHAVIOR FOR 7075-T7351 AT R = 0.500

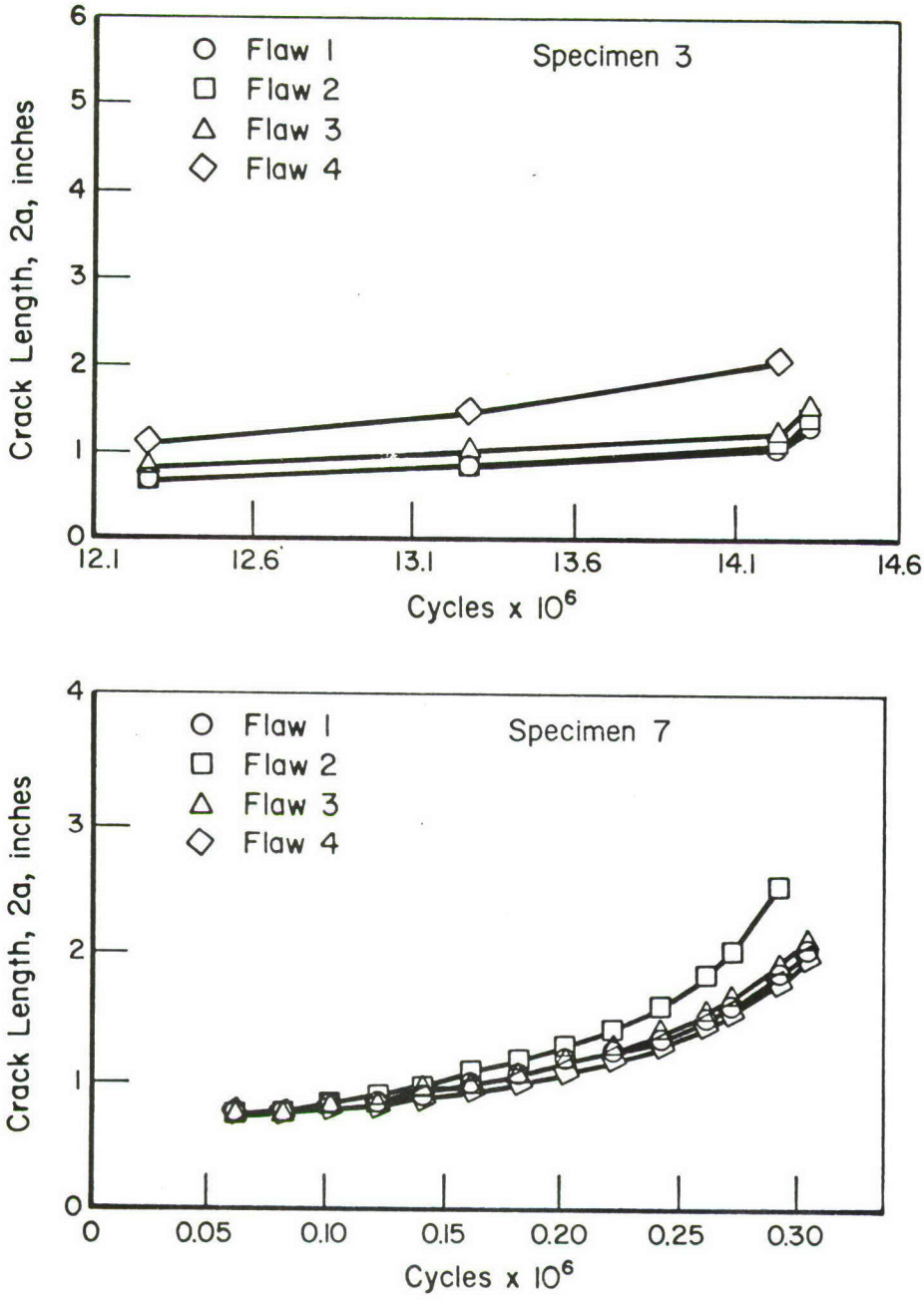

FIGURE 52. CRACK LENGTH-CYCLES BEHAVIOR FOR 7075-T7351 AT R = 0.250

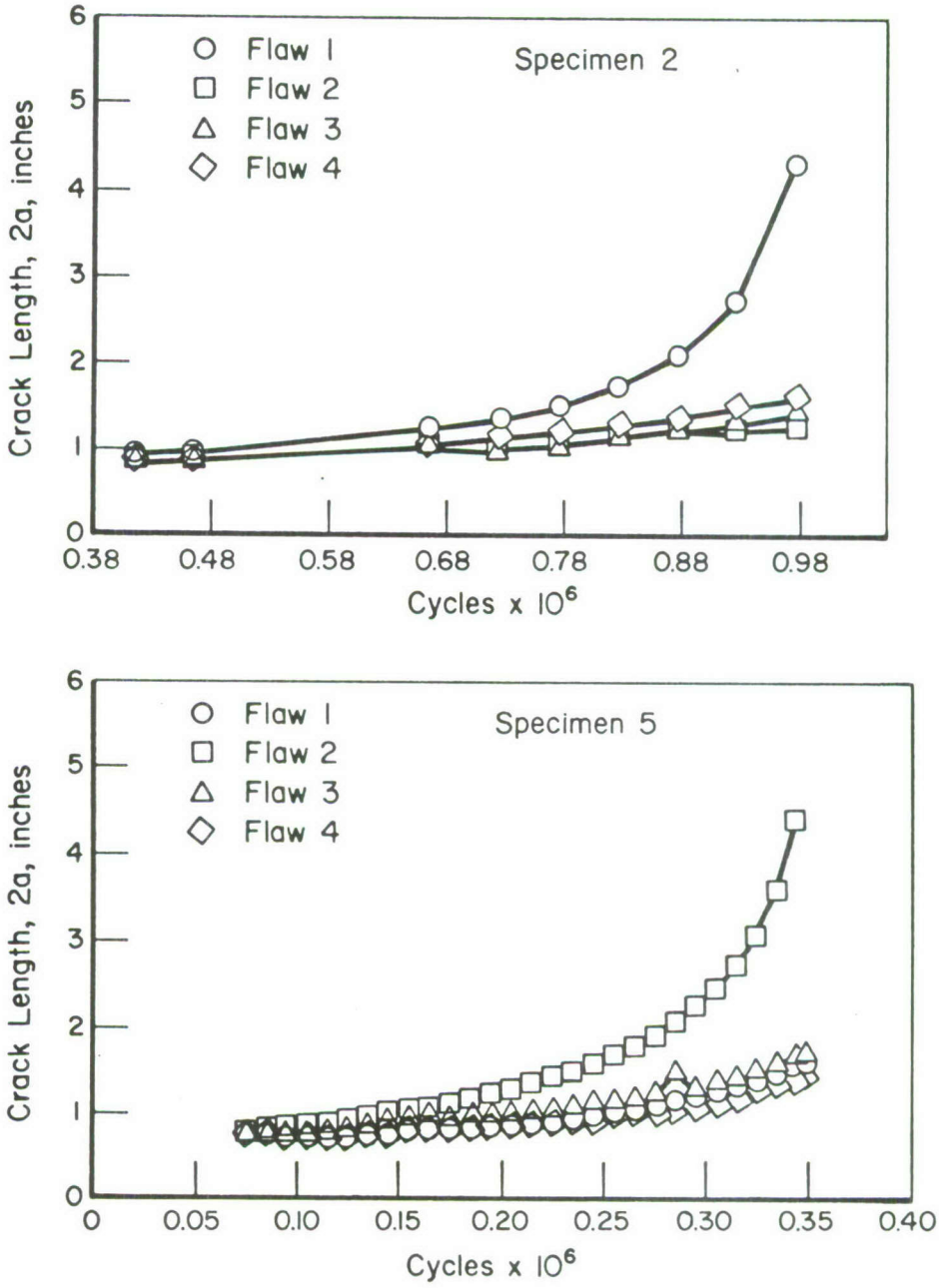

FIGURE 53. CRACK LENGTH-CYCLES BEHAVIOR FOR 7075-T7351 AT R = 0.100

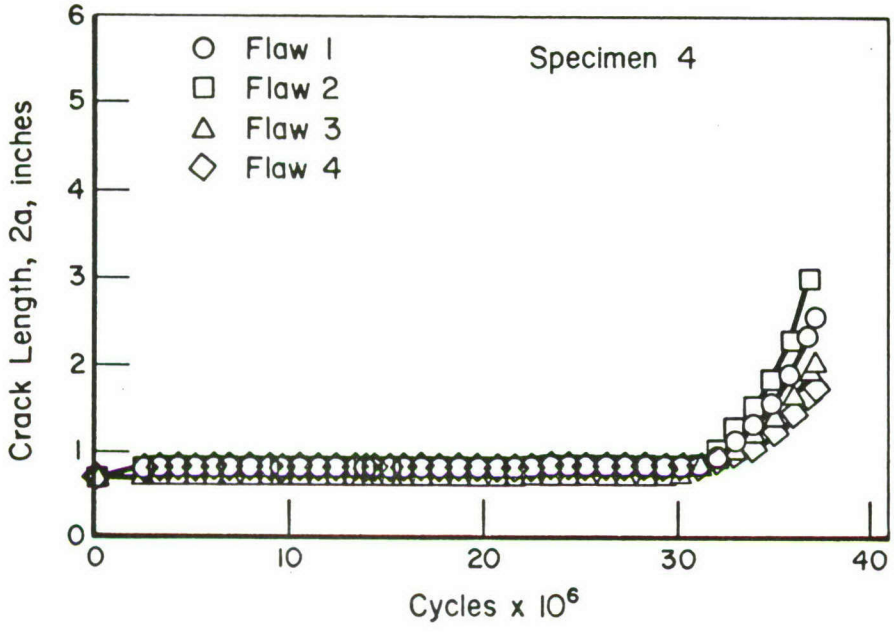

FIGURE 54. CRACK LENGTH-CYCLES BEHAVIOR FOR 7075-T7351 AT R = 0.500, 0.250, 0.100 (ADDITIONAL DATA)

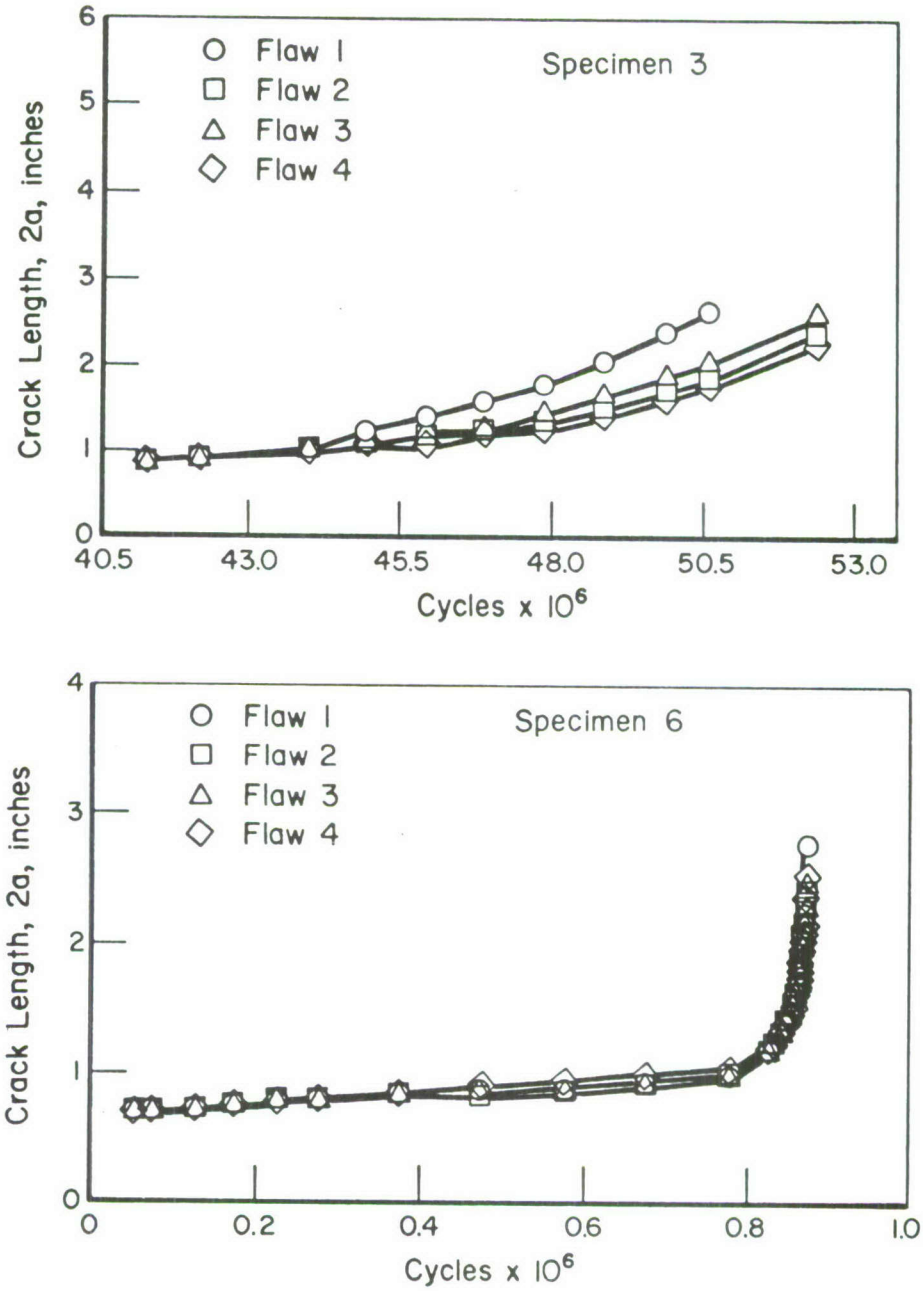

FIGURE 55. CRACK LENGTH-CYCLES BEHAVIOR FOR 7475-T7351 AT R = 0.500

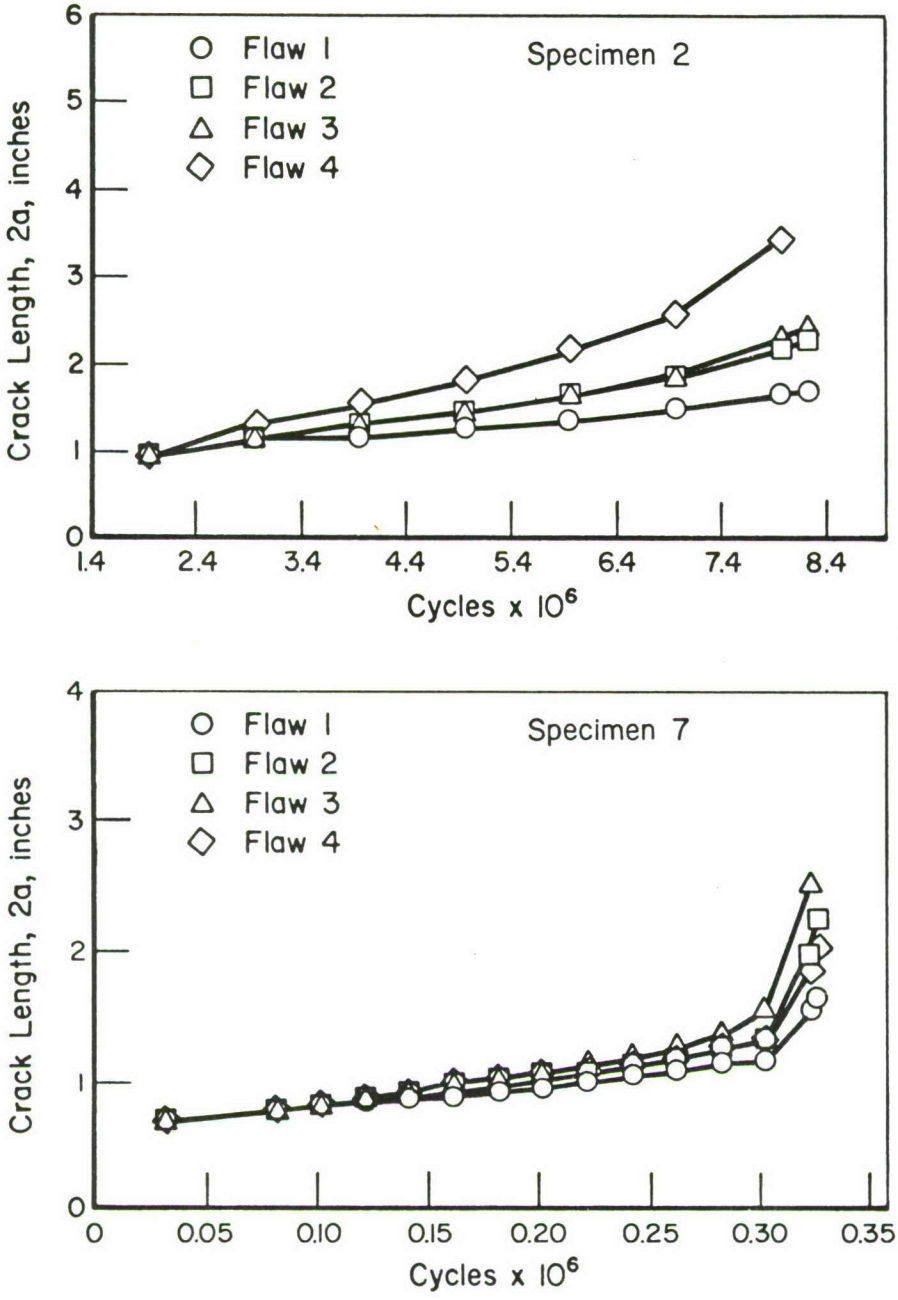

FIGURE 56. CRACK LENGTH-CYCLES BEHAVIOR FOR 7475-T7351 AT R = 0.250

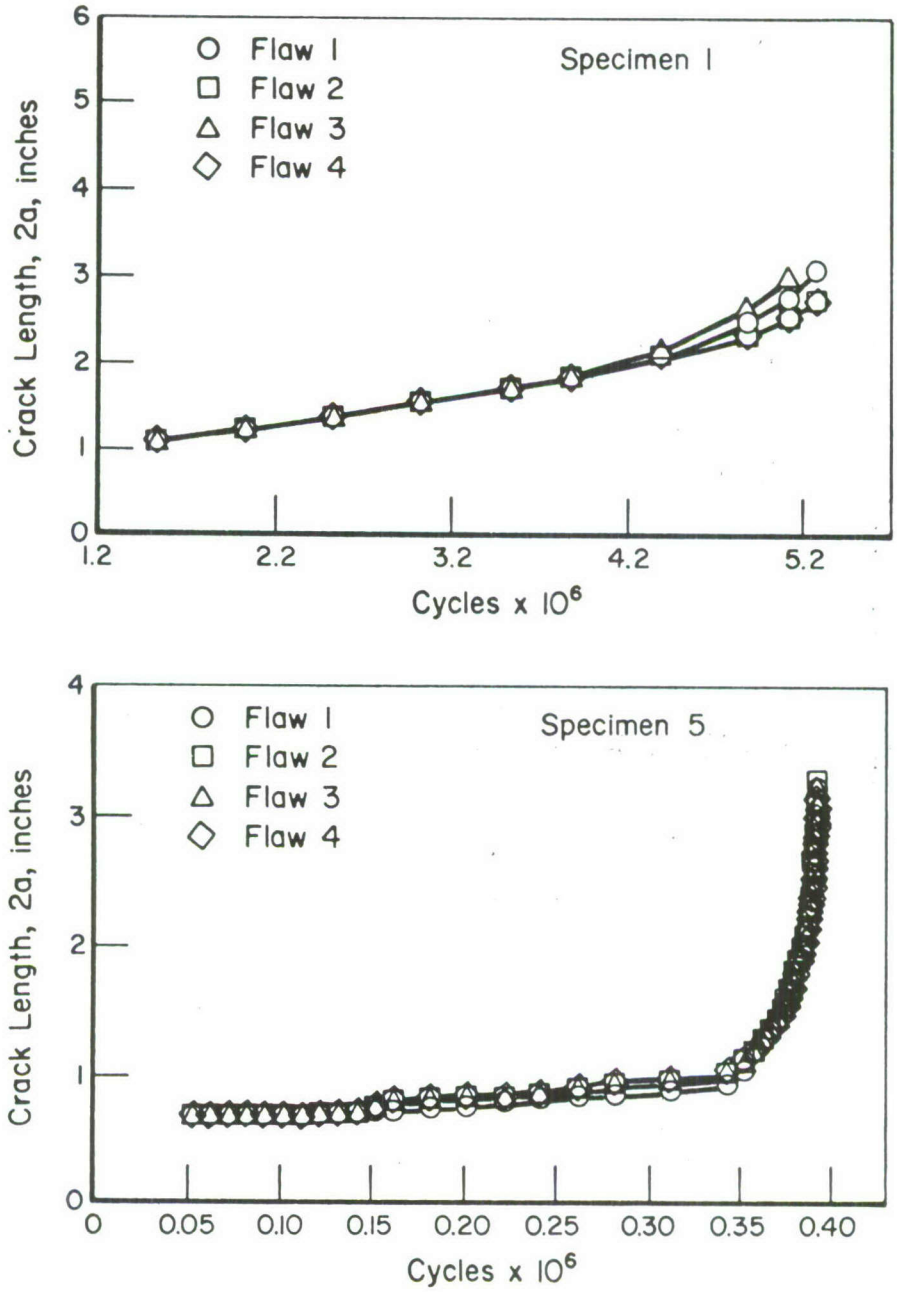

FIGURE 57. CRACK LENGTH-CYCLES BEHAVIOR FOR 7475-T7351 AT R = 0.100

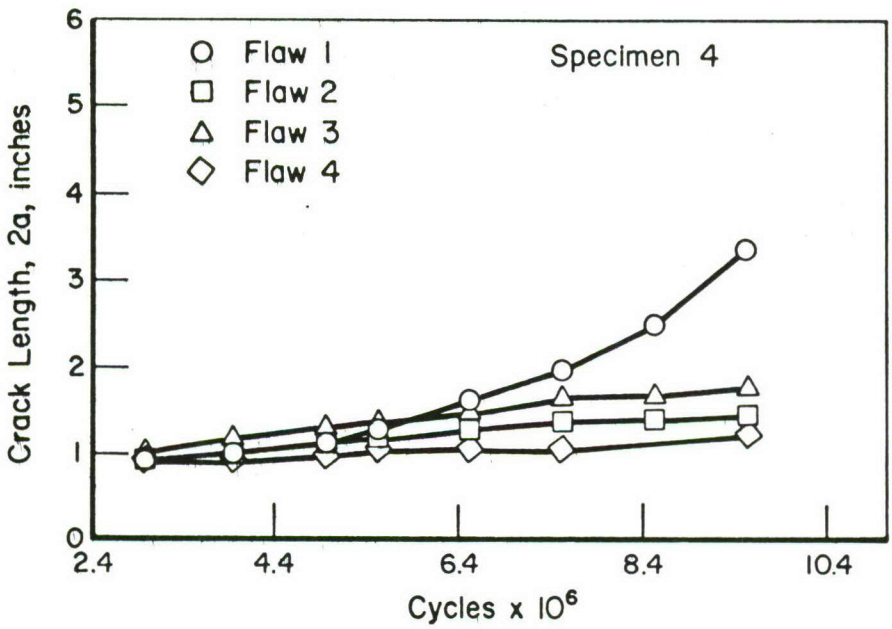

FIGURE 58. CRACK LENGTH-CYCLES BEHAVIOR FOR 7475-T7351 AT R = 0.100, 0.070, 0.250, 0.500 (ADDITIONAL DATA)

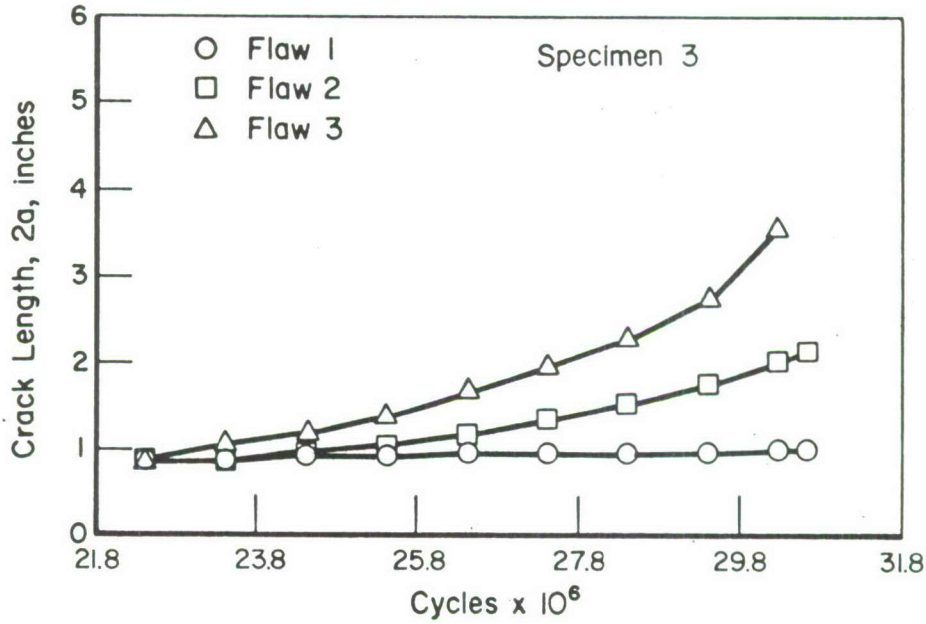

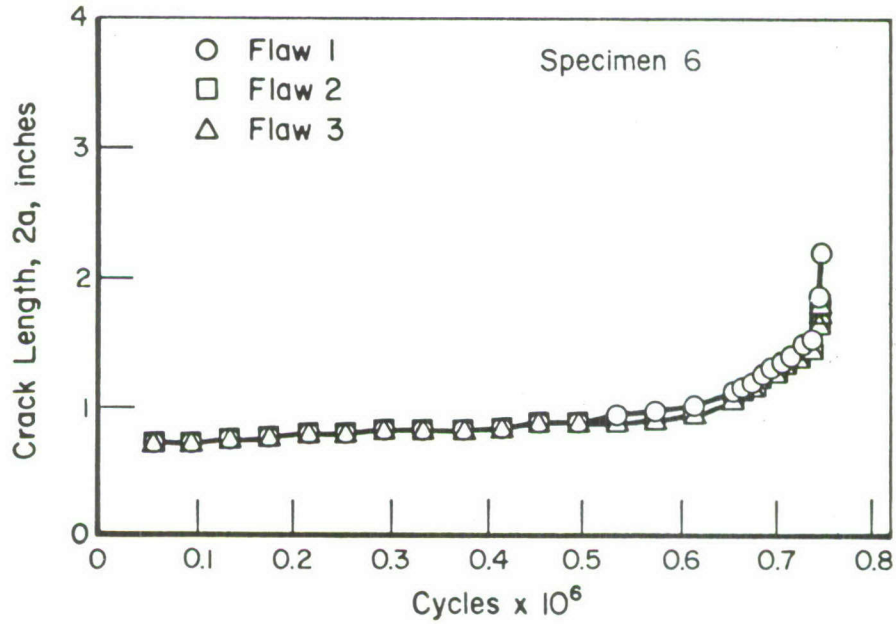

FIGURE 59. CRACK LENGTH-CYCLES BEHAVIOR FOR 2124-T851 AT R = 0.500

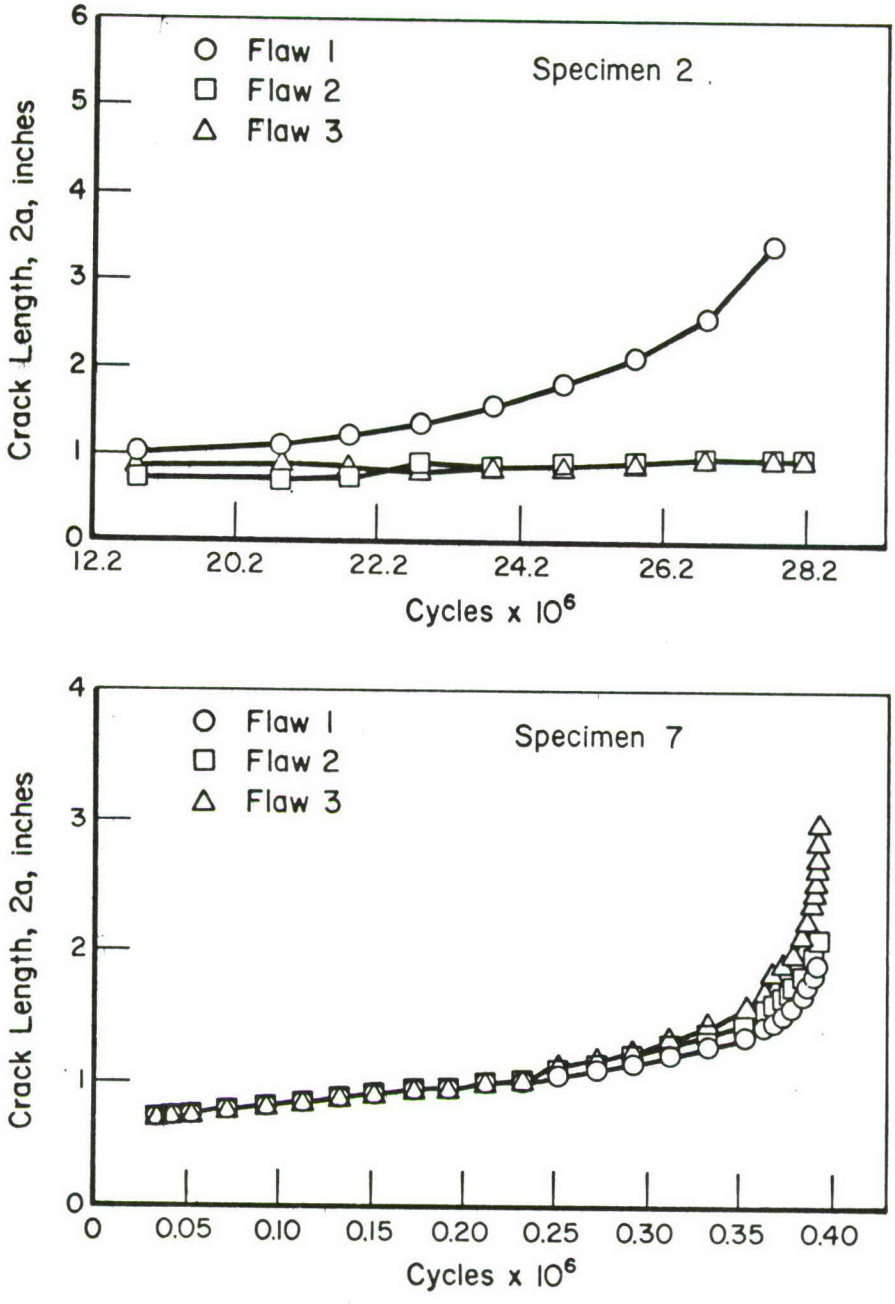

FIGURE 60. CRACK LENGTH-CYCLES BEHAVIOR FOR 2124-T851 AT R = 0.250

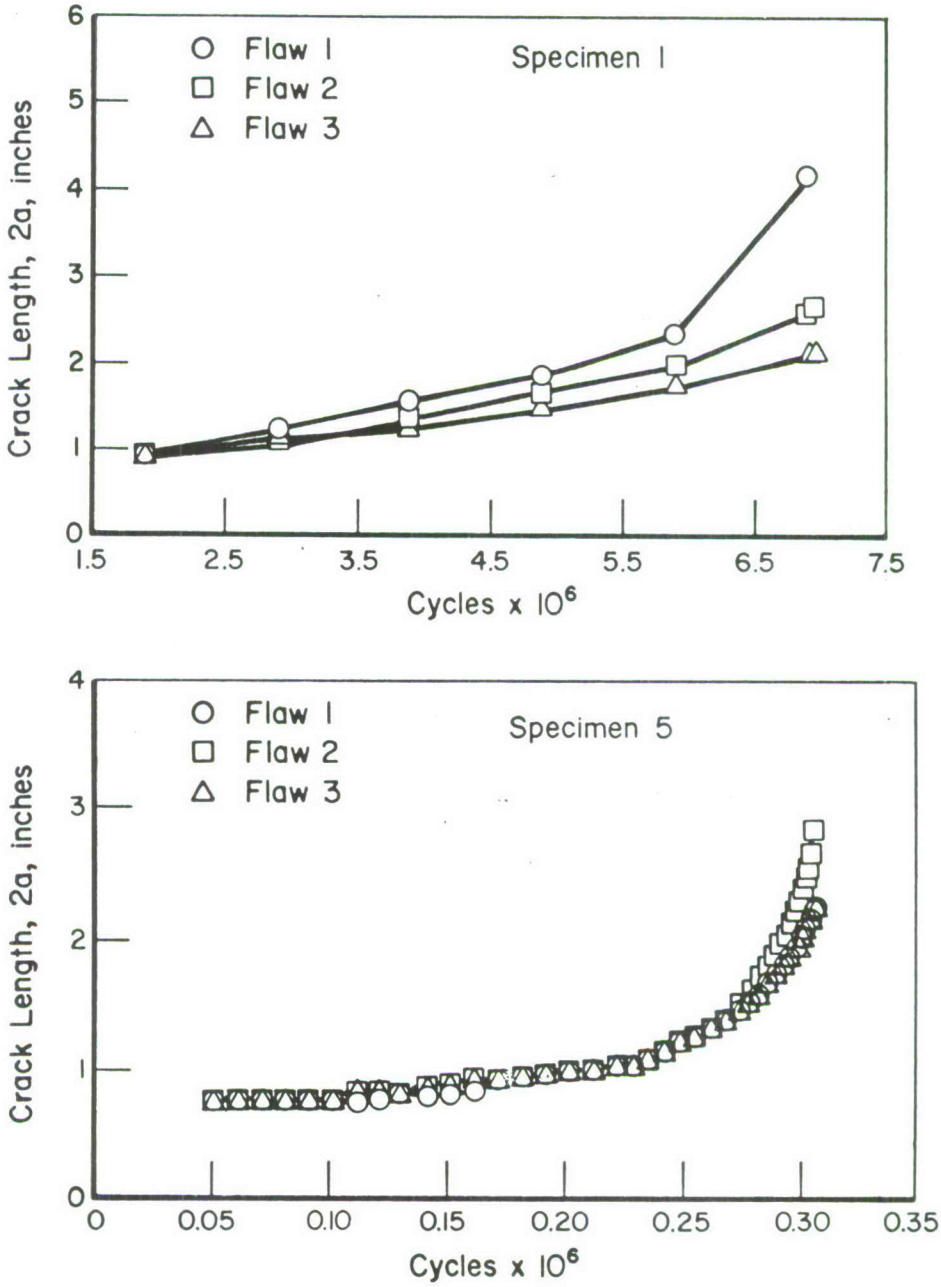

FIGURE 61. CRACK LENGTH-CYCLES BEHAVIOR FOR 2124-T851 AT R = 0.100

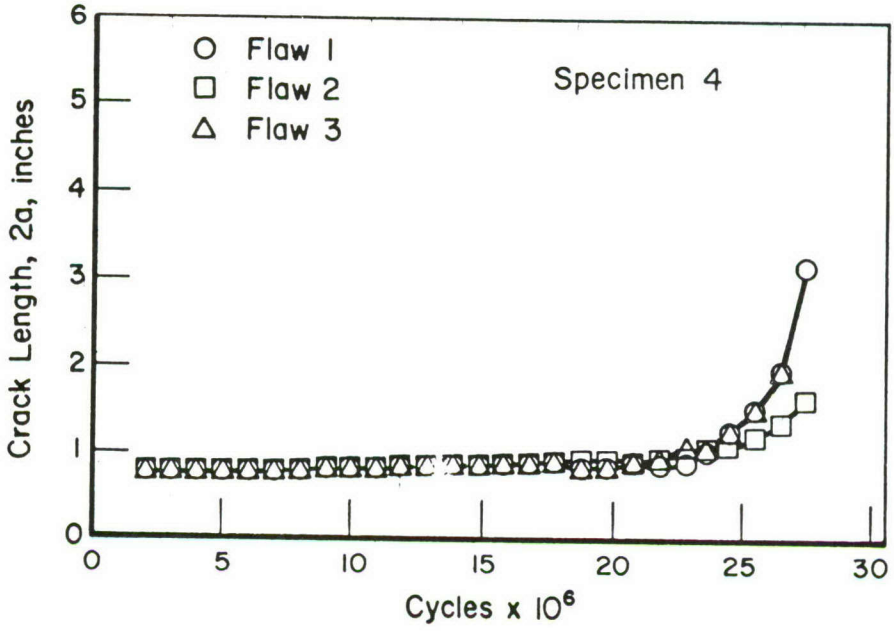

FIGURE 62. CRACK LENGTH-CYCLES BEHAVIOR FOR 2124-T851 AT R = 0.500, 0.250, 0.100 (ADDITIONAL DATA)

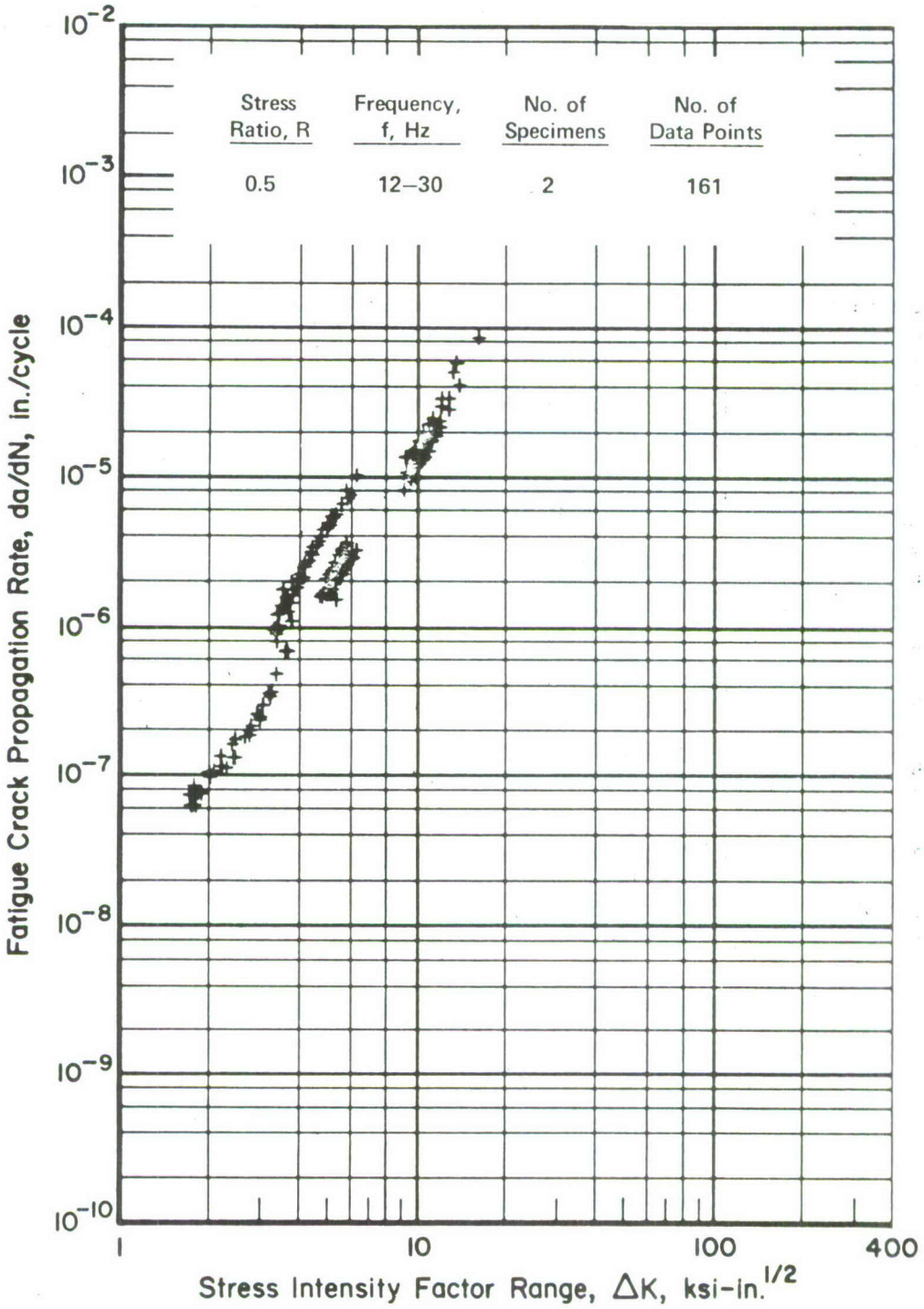

FIGURE 63. FATIGUE CRACK GROWTH RATE FOR 7075-T7351 AT R = 0.500

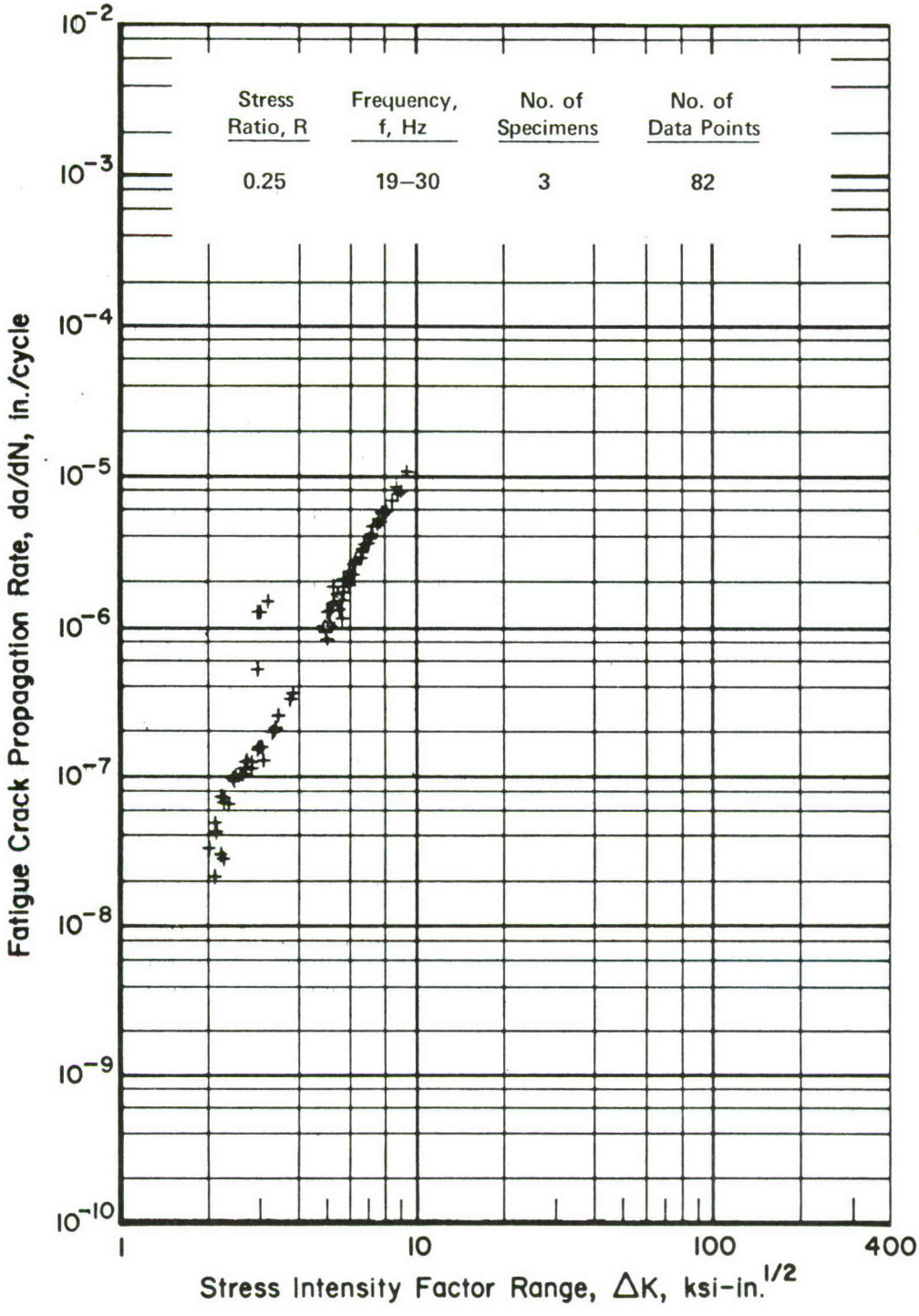

FIGURE 64. FATIGUE CRACK GROWTH RATE FOR 7075-T7351 AT R = 0.250

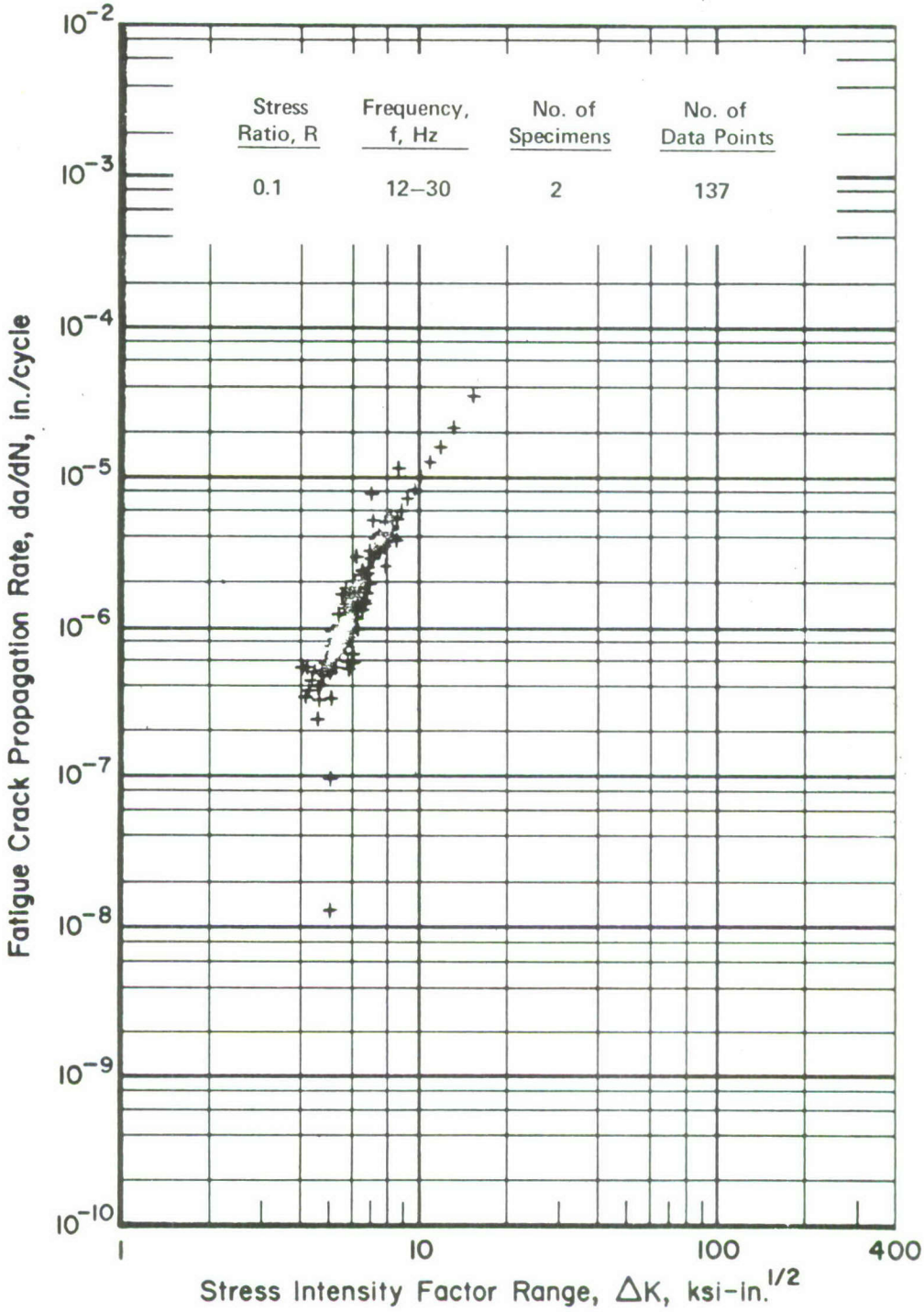

FIGURE 65. FATIGUE CRACK GROWTH RATE FOR 7075-T7351 AT R = 0.100

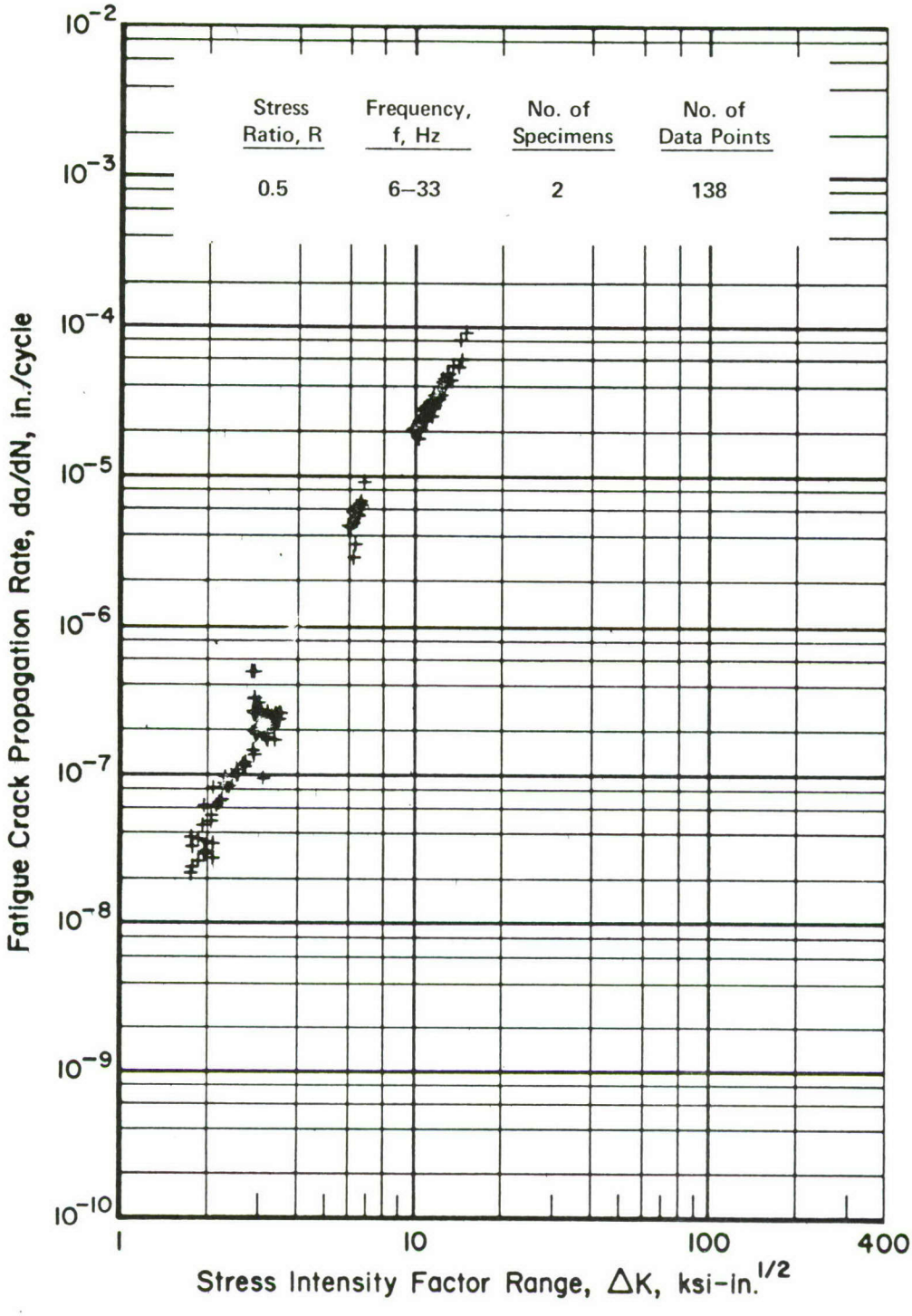

FIGURE 66. FATIGUE CRACK GROWTH RATE FOR 7475-T7351 AT R = 0.500

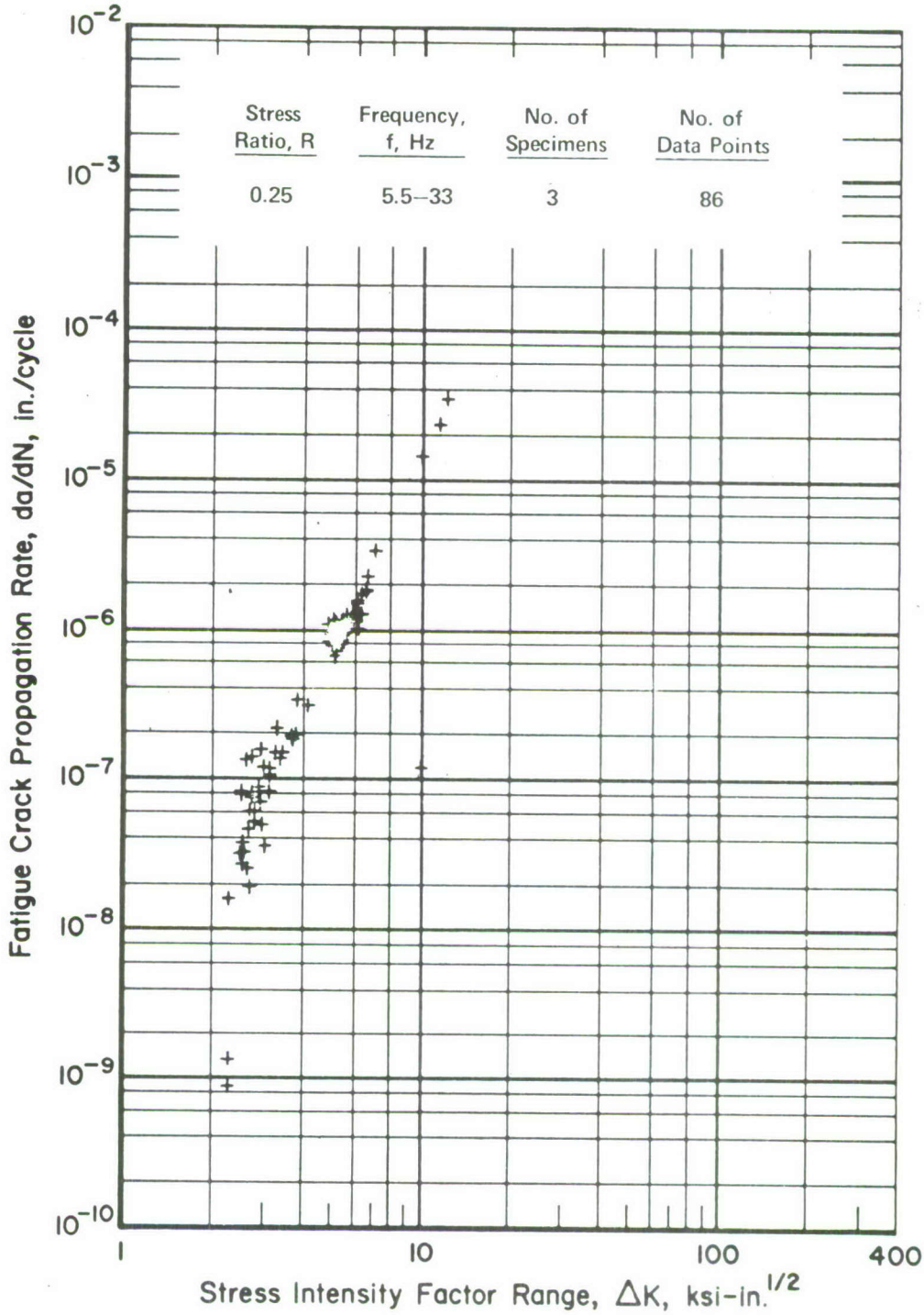

FIGURE 67. FATIGUE CRACK GROWTH RATE FOR 7475-T7351 AT R = 0.250

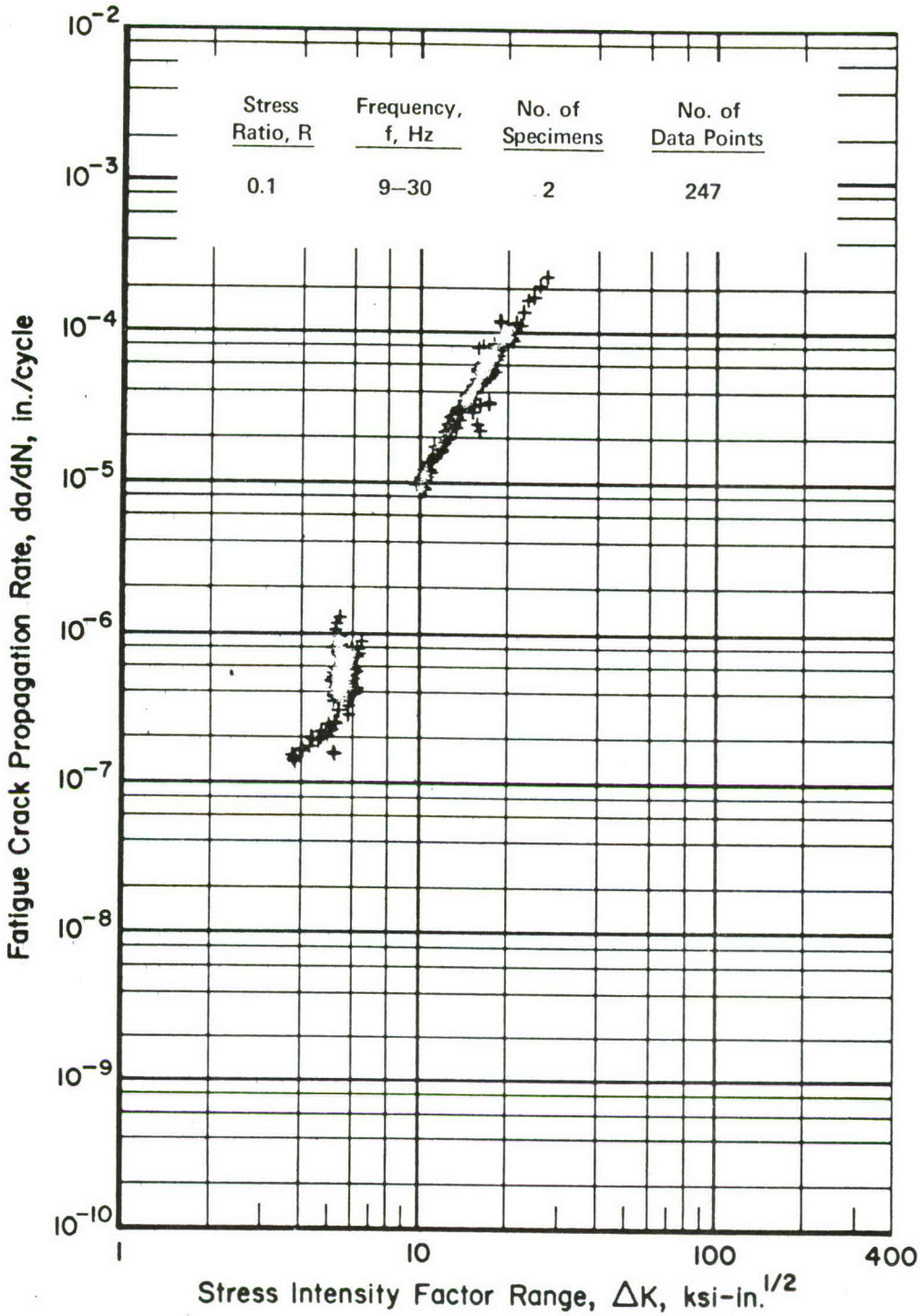

FIGURE 68. FATIGUE CRACK GROWTH RATE FOR 7475-T7351 AT R = 0.100

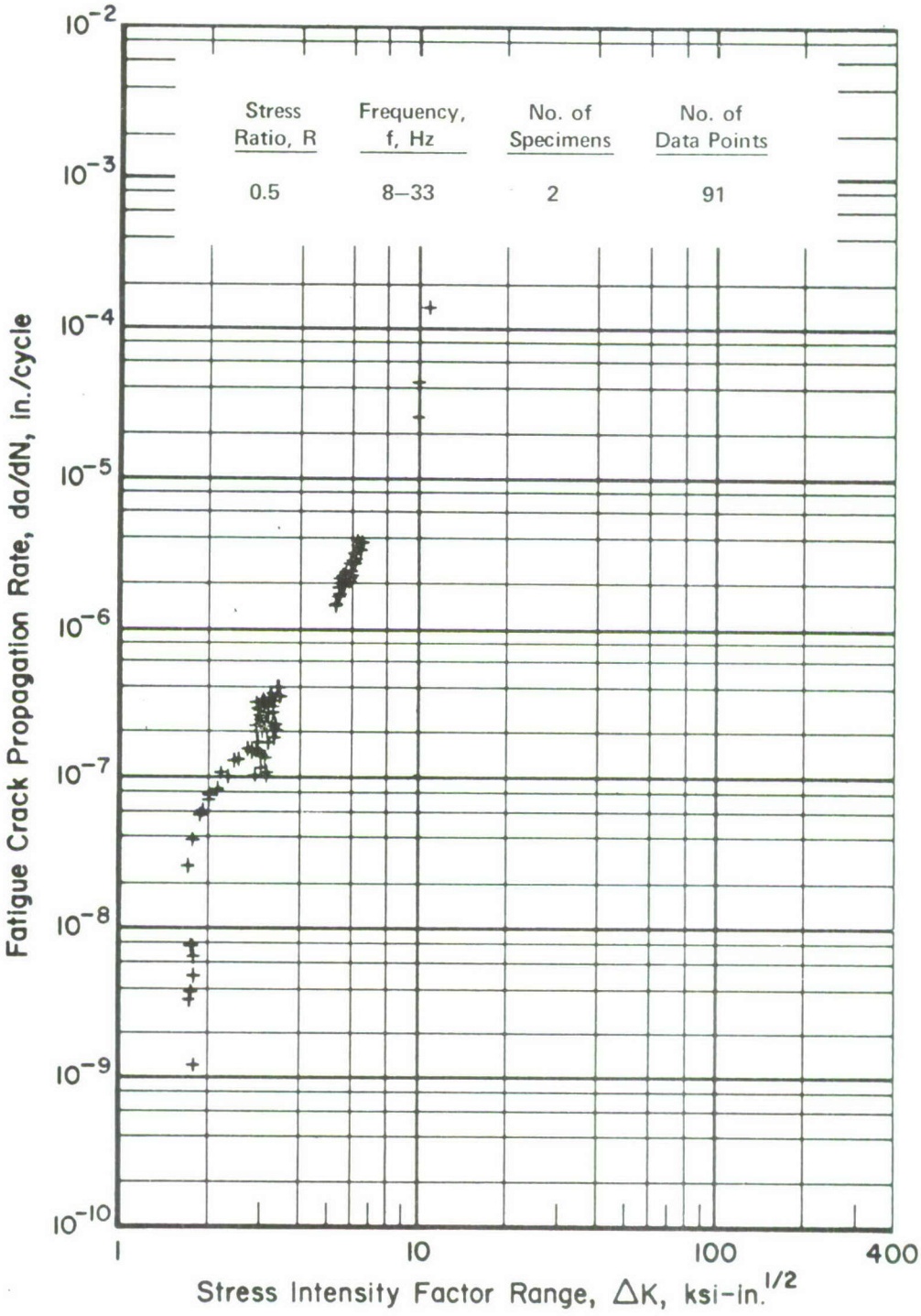

FIGURE 69. FATIGUE CRACK GROWTH RATE FOR 2124-T851 AT R = 0.500

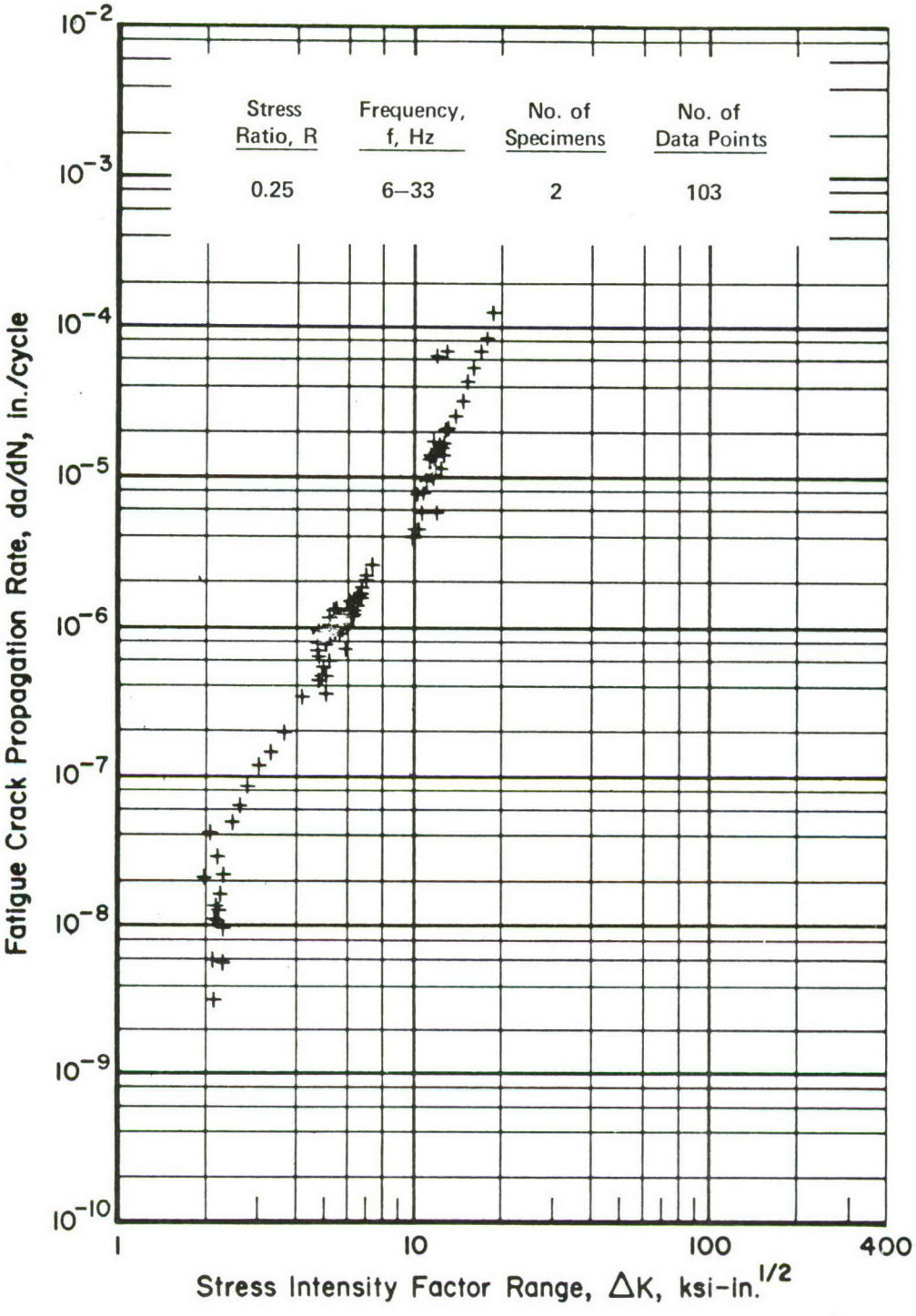

FIGURE 70. FATIGUE CRACK GROWTH RATE FOR 2124-T851 AT R = 0.250

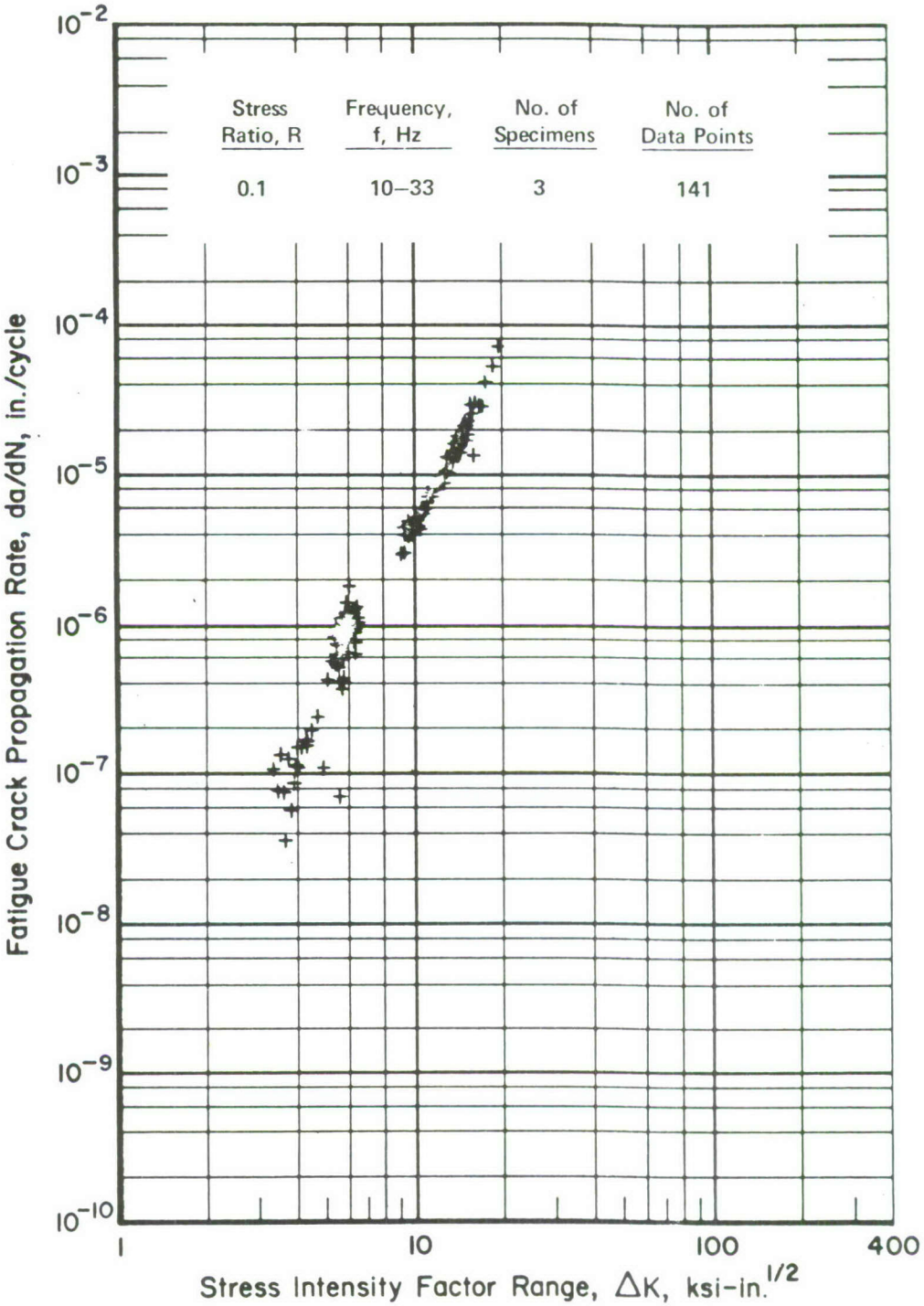

FIGURE 71. FATIGUE CRACK GROWTH RATE FOR 2124-T851 AT R = 0.100

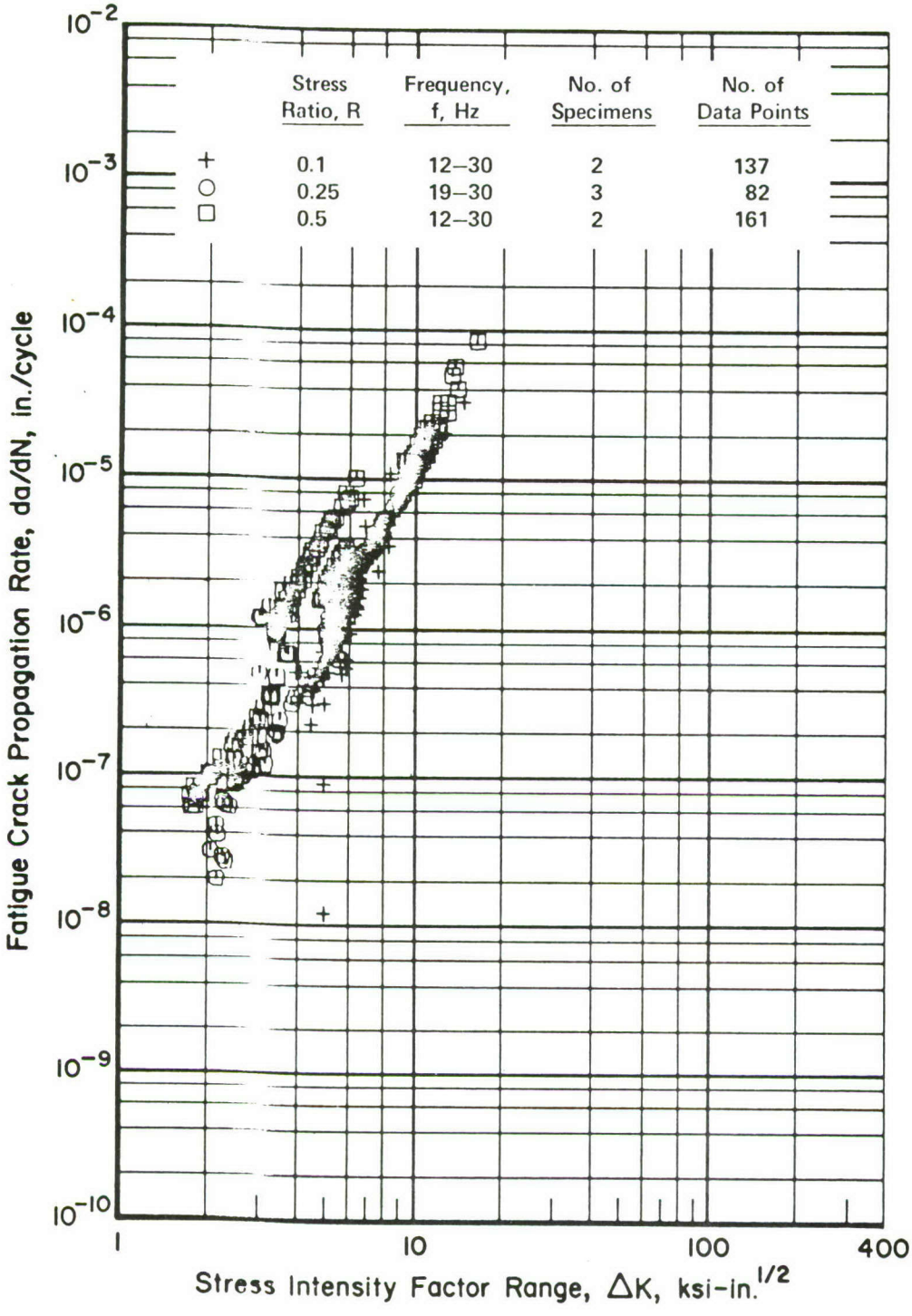

FIGURE 72. FATIGUE CRACK GROWTH RATE FOR 7075-T7351 AT VARIOUS R RATIOS

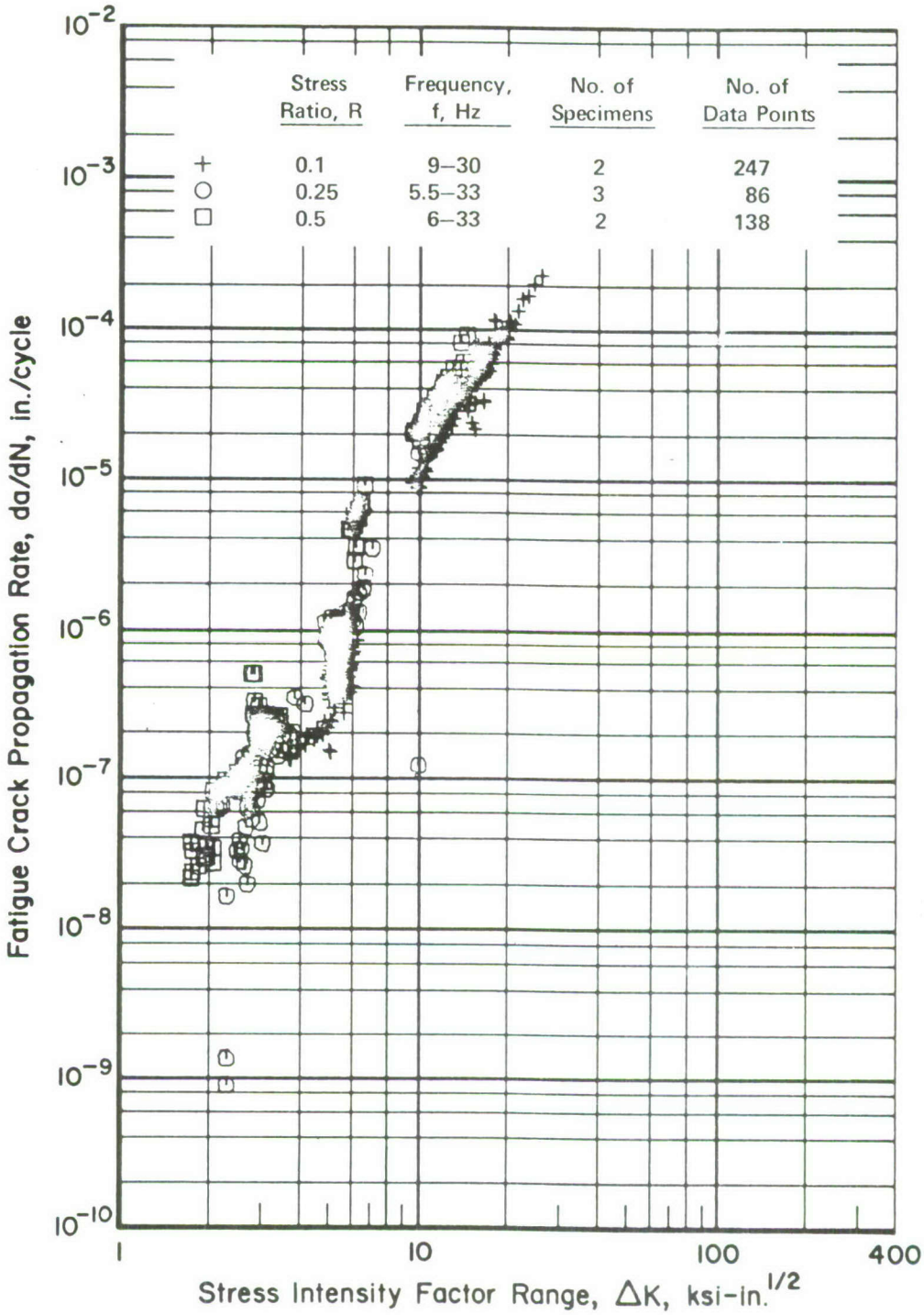

FIGURE 73. FATIGUE CRACK GROWTH RATE FOR 7475-T7351 AT VARIOUS R RATIOS

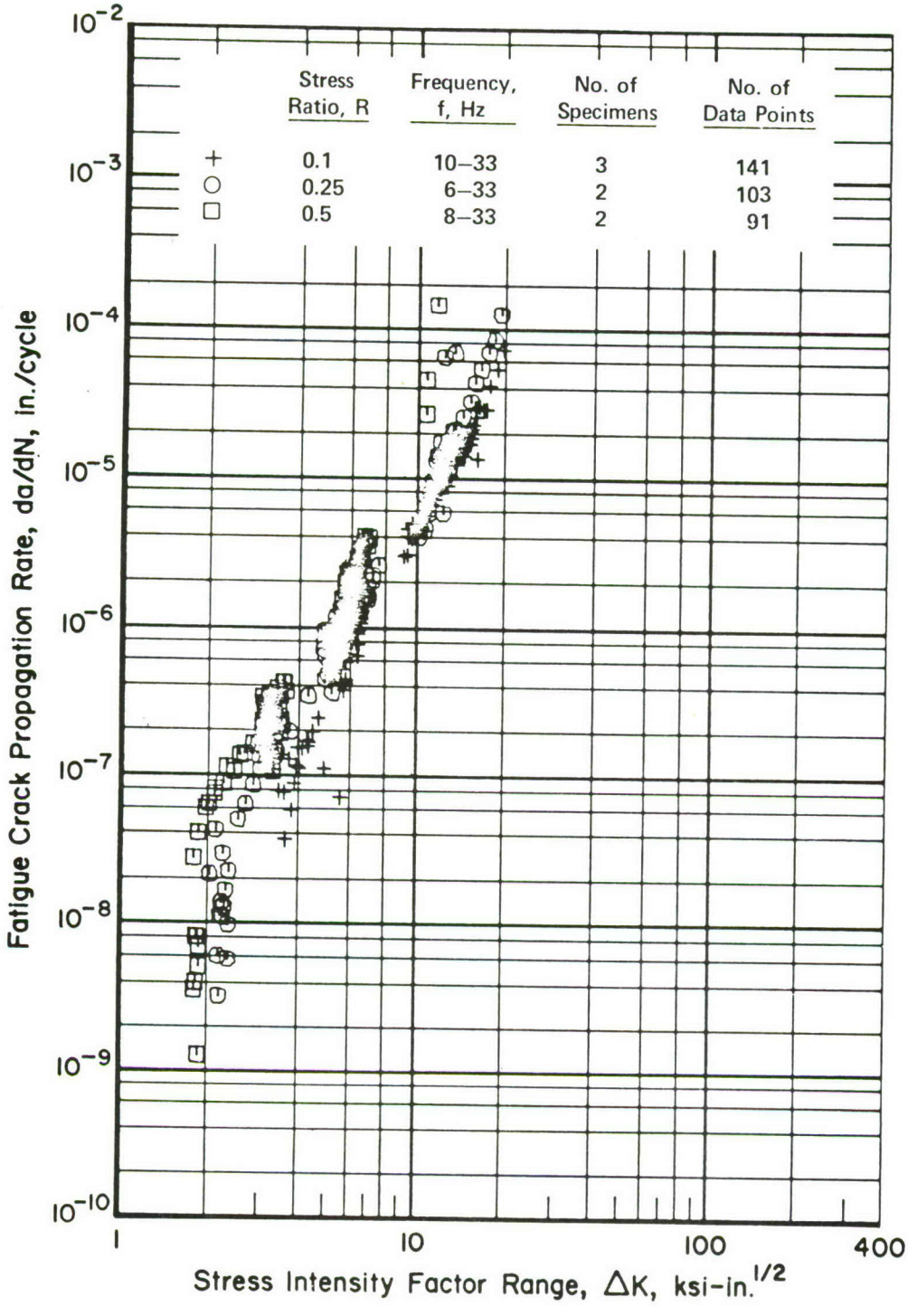

FIGURE 74. FATIGUE CRACK GROWTH RATE FOR 2124-T851 AT VARIOUS R RATIOS

TABLE 47. RESULTS OF THRESHOLD ΔK IN HUMID ENVIRONMENT

Alloy and Heat Treatment	R ratio	ΔK_{th} ksi$\sqrt{in}$	Type[a] Growth
7075-T7351	0.10	4.026	A
	0.10	2.008	C
	0.25	1.983	A
	0.25	1.665	C
	0.50	1.608	A
	0.50	1.110	C
7475-T7351	0.10	3.583	A
	0.25	2.397	A
	0.25	2.270	C
	0.50	1.709	A
	0.50	1.537	B
2124-T851	0.10	3.112	A
	0.10	3.520	A
	0.10	2.876	C
	0.25	1.952	A
	0.25	2.200	C
	0.50	1.703	A
	0.50	1.528	B
	0.50	1.399	C

[a] A = Lowest ΔK_{th} of multiple cracks during initial growth.

B = Lowest ΔK_{th} of multiple cracks which showed growth during prior cycling.

C = Lowest from verification specimen.

ΔK_{th} is described as follows. A type of growth either A, B, or C designation was given to the selected value of ΔK_{th}. The A designation indicates the ΔK_{th} value which was the lowest of the multiple cracks during the first panel test at a given R ratio. The B designation refers to the ΔK_{th} value which showed slight growth during the prior cycling at a lower maximum stress level. If growth did not occur, a B designation was omitted. The C designation refers to the ΔK_{th} value as determined by the fourth panel testing which was the verification or make-up test to further define the ΔK_{th} at a given R ratio. The ΔK_{th} values established by this selection are for a humid environment which could be affected slightly by the fatigue crack precracking in laboratory air. Therefore, the lower bound of ΔK_{th} data, at a given R ratio, should be selected as the ΔK_{th} in 95 percent or higher humidity environment.

A summary graph of the results for each alloy is presented in Figure 75. It has been shown in Reference 16 that ΔK_{th} versus R data can be fitted to $\Delta K = C(1 - R^2)$, where C is material and environmental dependent. The curves shown in Figure 75 are fitted to the lower bound ΔK_{th} value for each alloy.

Summary—Fatigue crack propagation data has been presented for three aluminum alloys, 7075-T7351, 7475-T7351, and 2124-T851, in 95 percent or higher humidity environment at R = 0.500, 0.250, and 0.100. Fatigue crack growth rate data were generated in the low rate region of propagation where da/dN = 10^{-9} to 10^{-6} inches/cycle and additional da/dN data were generated to fill the gap between the low da/dN data and the data in the Damage Tolerant Design Handbook. The resulting da/dN data covered a range from 10^{-9} to 10^{-4} inches/cycle. Threshold cyclic stress intensity levels, ΔK_{th}, were determined for each alloy and R ratio in 95 percent or higher humidity environment. An average fit of the lower bound of ΔK_{th} versus R was determined.

Recommendations—With this additional fatigue crack propagation data, it is recommended that complete ΔK-da/dN curves at various R ratios for 7075-T7351, 7475,T7351, and 2124-T851 be proposed for inclusion in MIL-HDBK-5.

---

(16) Grandt, A. F., and Gallagher, J. P., "Proposed Fracture Mechanics Criteria to Select Mechanical Fasteners for Long Service Lives", ASTM STP 559, 1974.

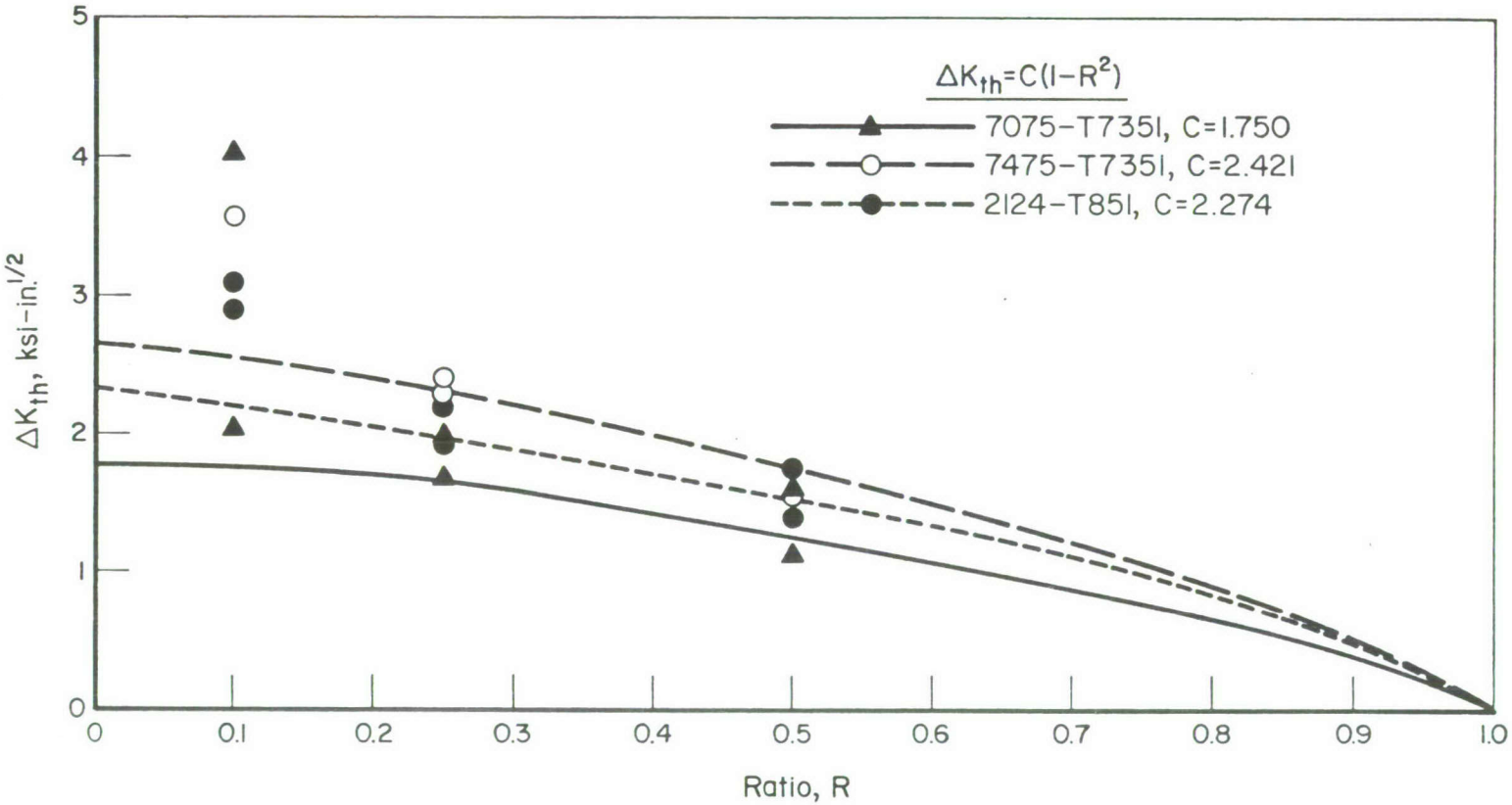

FIGURE 75. VARIATION OF THRESHOLD ΔK WITH R RATIO FOR ALUMINUM ALLOYS EVALUATED

APPENDIX A

SPECIMEN CONFIGURATIONS

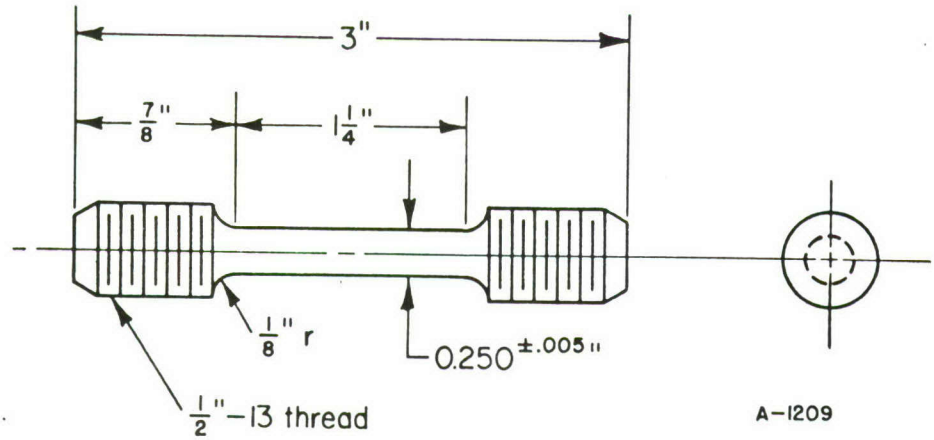

FIGURE A-1. SUBSIZE ROUND TENSILE SPECIMEN

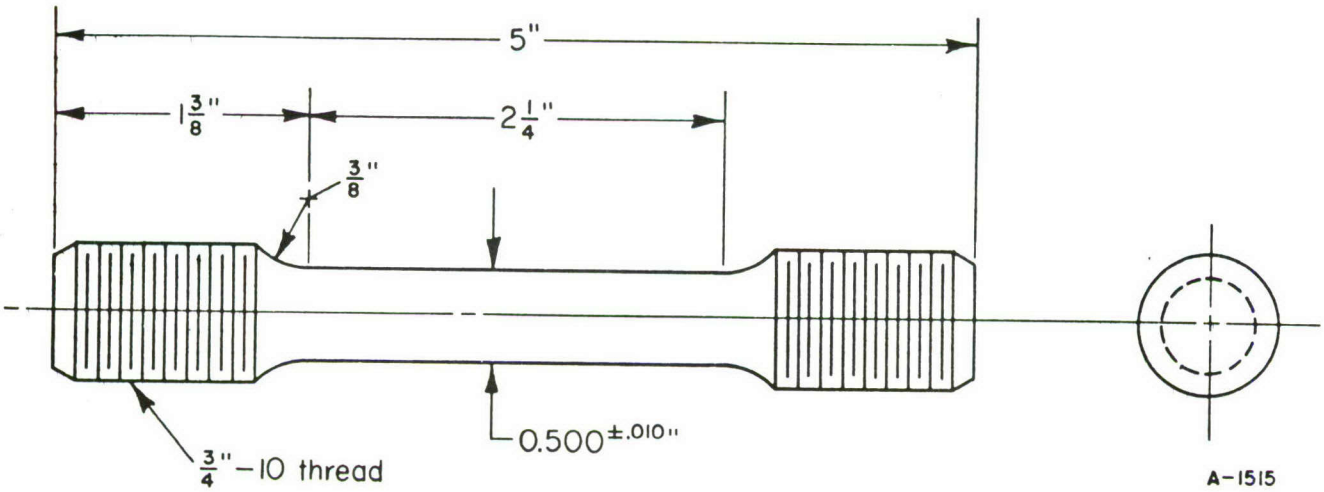

FIGURE A-2. ROUND TENSILE SPECIMEN

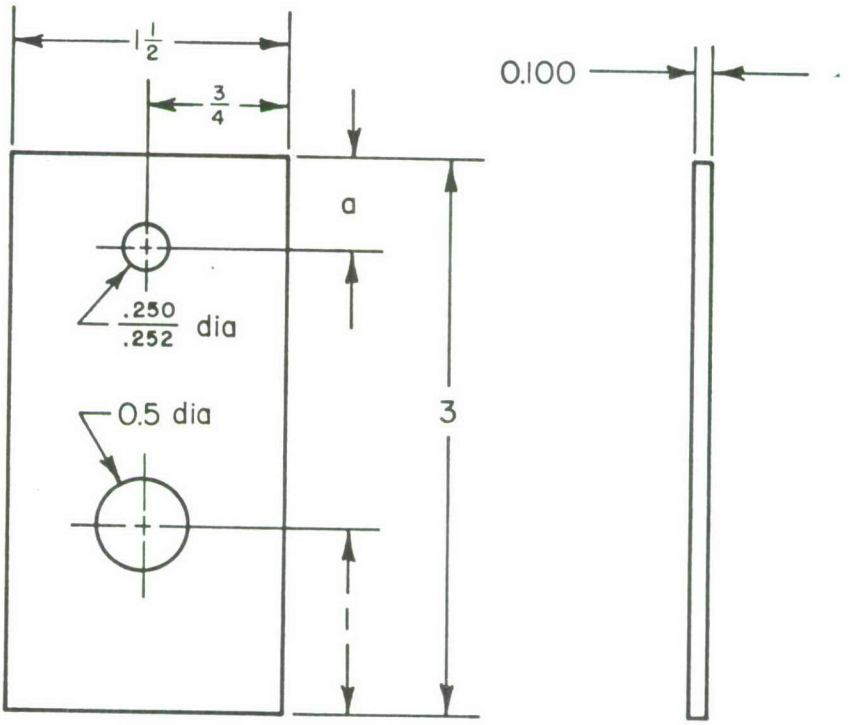

e/D of 1.5 a=.375
e/D of 2.0 a=.500

Note: All dimensions in inches

FIGURE A-3. BEARING SPECIMEN

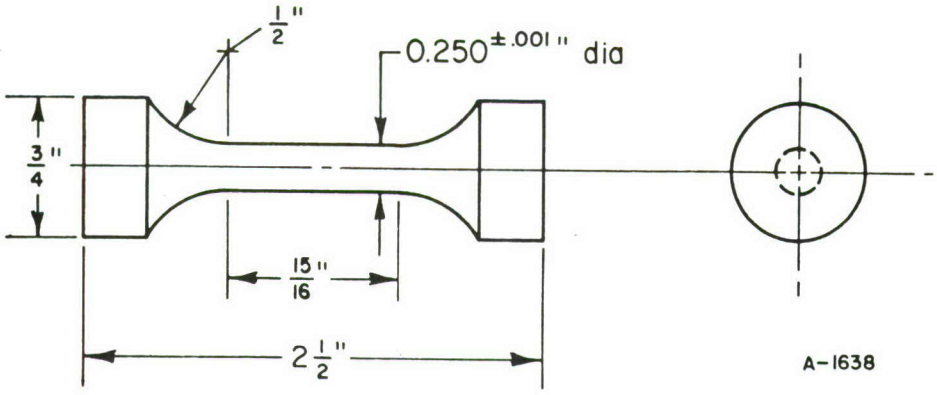

Note: Grind or machine ends of specimen so that ends of specimen shall be plane and perpendicular to the axis of the specimen within 0.25 degree. The ends shall be parallel within 0.0005".

FIGURE A-4. ROUND COMPRESSION SPECIMEN

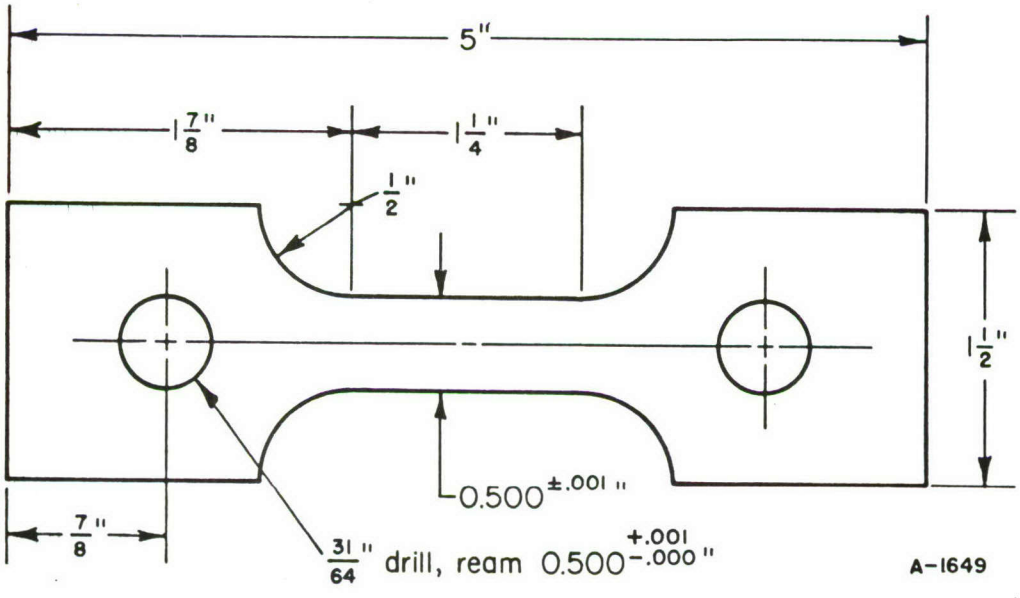

FIGURE A-5. SHEET TENSILE SPECIMEN — 1" GAGE LENGTH

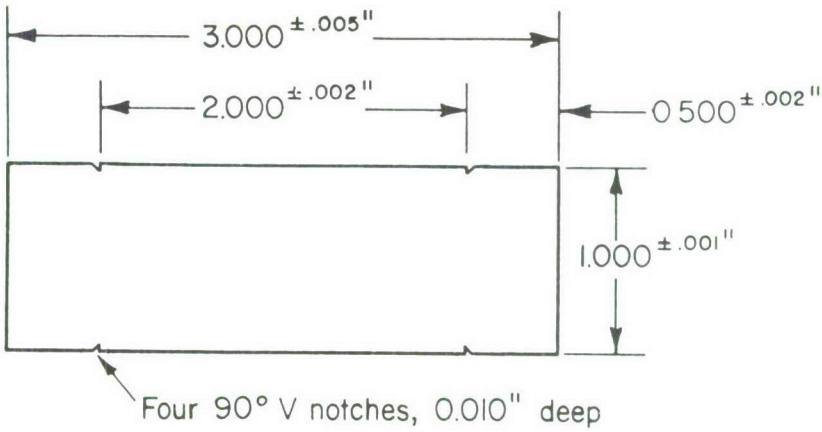

Notes: 1. Ends must be flat and parallel to within 0.0002".

2. Surface must be free from nicks and scratches.

A-1516

FIGURE A-6. SHEET COMPRESSION SPECIMEN

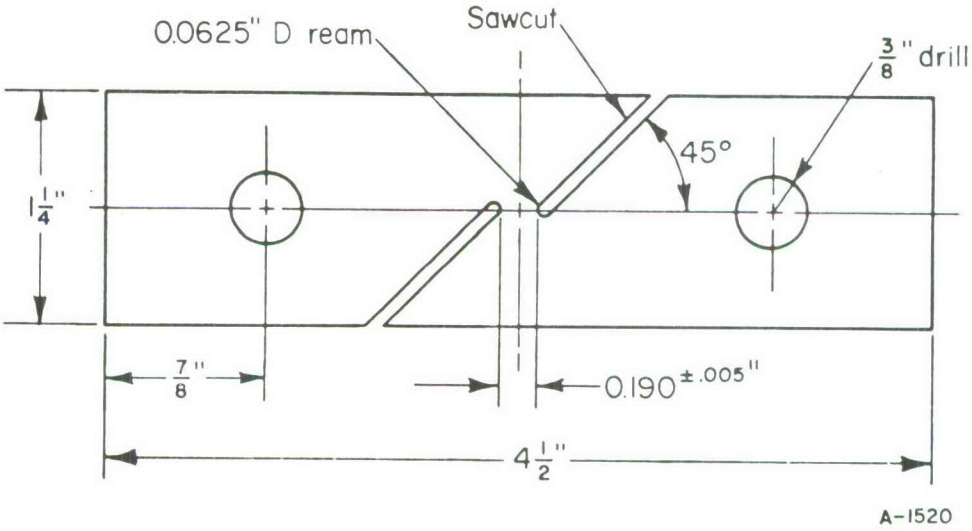

FIGURE A-7. SHEET SHEAR SPECIMEN

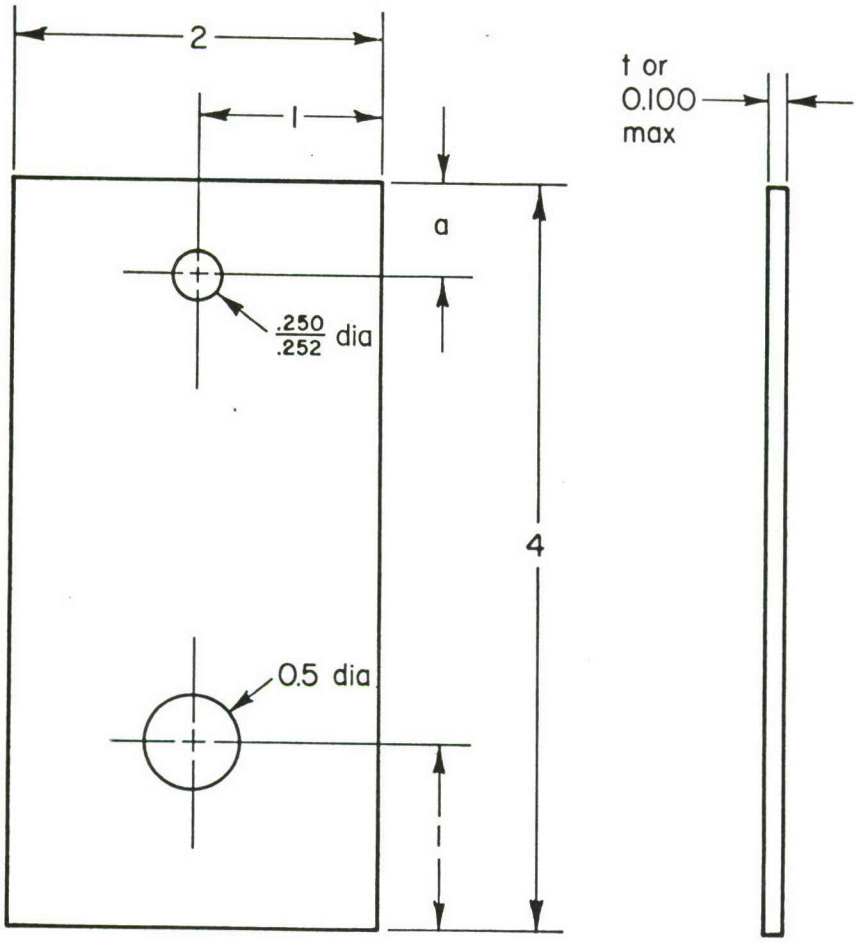

e/D of 1.5 a=.375
e/D of 2.0 a=.500

Note: All dimensions in inches

FIGURE A-8. SHEET BEARING SPECIMEN

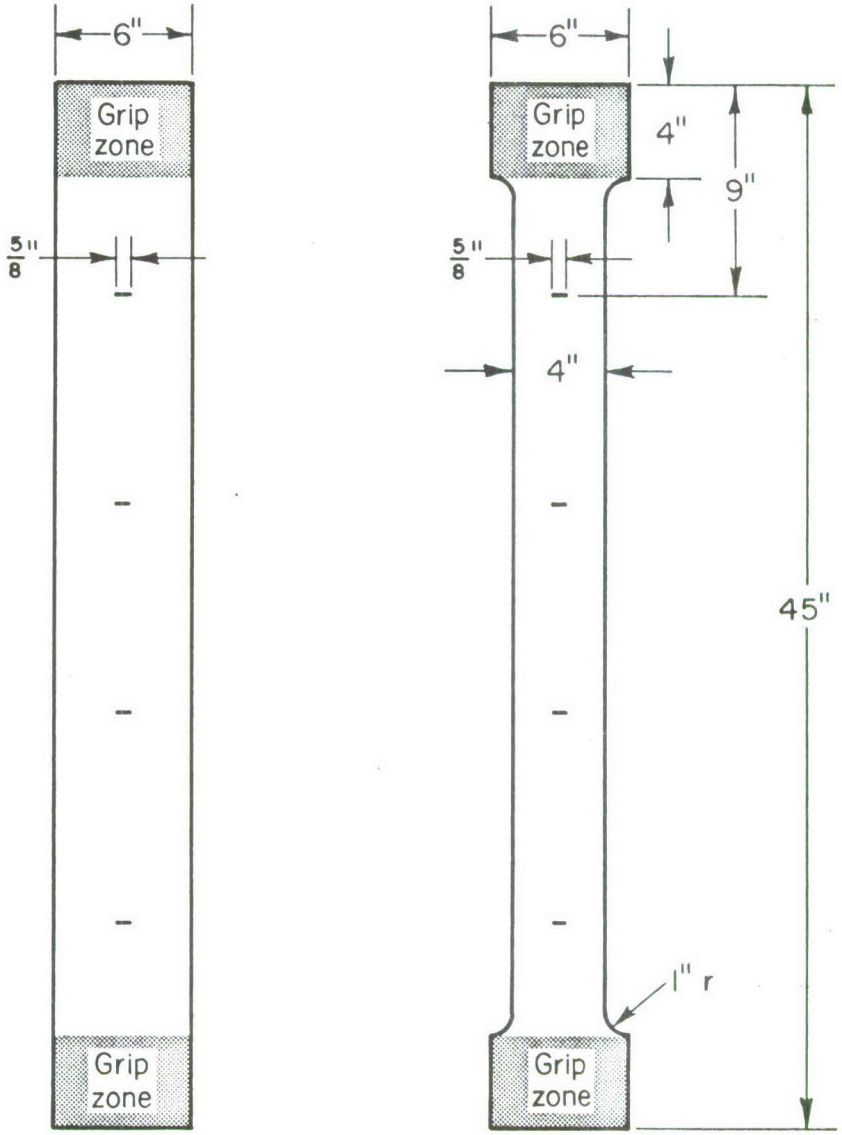

FIGURE A-9. MULTIFLAW CENTER-CRACK PANEL CONFIGURATIONS (45 INCHES LONG)

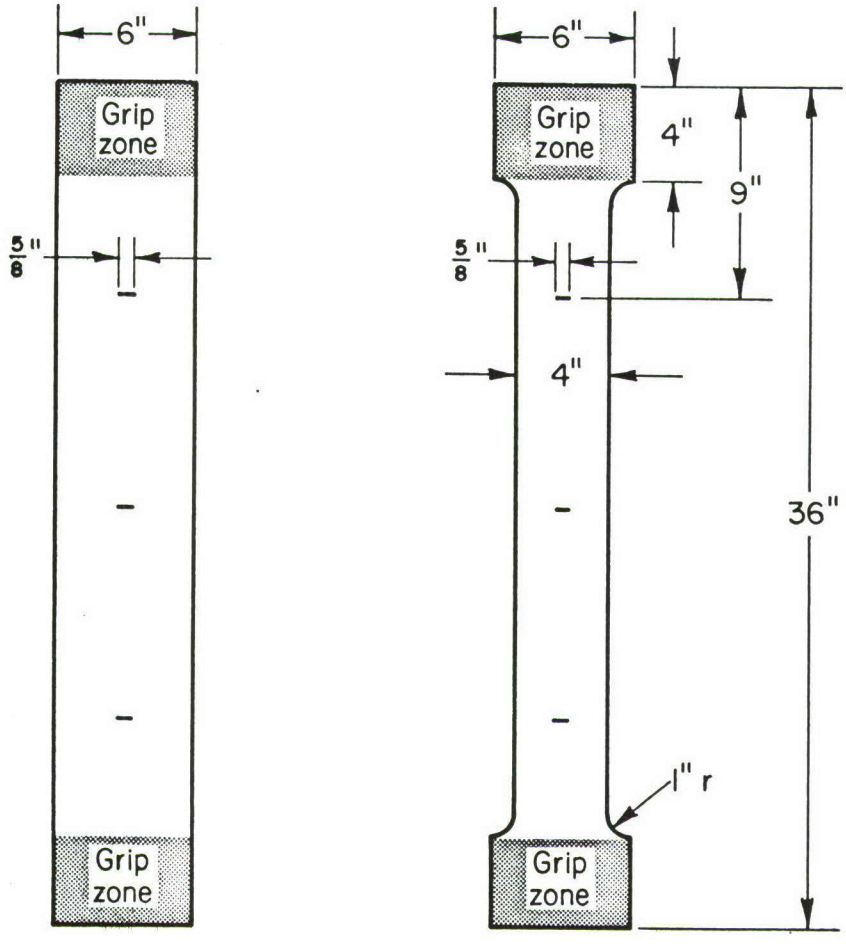

FIGURE A-10. MULTIFLAW CENTER-CRACK PANEL CONFIGURATIONS (36 INCHES LONG)

APPENDIX B

TEST PROCEDURES

Tension

Procedures used for tension testing were those recommended in ASTM Method E8 and E21. Depending on the material, the specimens were either the standard round or pin-loaded flat type as recommended in E8. Tensile tests were conducted using Baldwin Universal type testing machines. These machines are calibrated at frequent intervals in accordance with ASTM Method E4 to assure loading accuracy to within 0.2 percent. The machines are equipped with integral automatic strain pacers and autographic strain recorders.

The extensometers used conformed to ASTM E83 classification B1 having a sensitivity of 0.0001 in./in. The strain rate in the elastic region was mainteained at 0.005 in./in./min. After yielding occurred, the rate was increased to approximately 0.1 in./in./min until fracture. Ultimate strength, yield strength (0.2 percent offset), elongation, and reduction of area were determined. The yield strength and modulus of elasticity were determined from the load-strain curves. Tensile tests were conducted at room temperature only.

Compression

Procedures for conducting compression tests conformed to ASTM Method E9 along with the temperature control provisions of E21. Depending on the material, the specimens were either cylindrical or flat (sheet) type. Specimens tested at elevated temperatures in the Baldwin Universal testing machines were heated in standard wire-wound resistance-type furnaces. Each furnace was equipped with a Foxboro controller capable of maintaining the test temperature to within 5 F of the control temperature. Chromel-Alumel thermocouples were attached to the specimen gage section and used to monitor temperatures. For sheet specimens, thermocouples were approximately 1/16 inch from edge of specimen. Each specimen was soaked at temperature for about 20 minutes before being tested. Extensometry and strain rates were similar to those described in tension testing section.

The compressive yield strength (0.2 percent offset) and compressive modulus of elasticity were derived from the load-strain curves.

Shear

Single shear sheet-type specimens were used for shear tests, which were performed in a Baldwin Universal-type testing machine. Shear tests were conducted at room temperature only.

Bearing

Bearing tests were conducted in accordance with ASTM Method E238. All bearing tests were performed in electrohydraulic servocontrolled testing machines. The test setup is shown in Figure B-1. Extensometry has been removed for clarity. Deformation of the bearing hole was measured with a differential-transformer extensometer and recorded versus load with a conventional autographic recorder. The hardened steel bearing pin was rotated so that a new bearing surface was used for each specimen. Prior to testing, the pins, specimens, and fixture were ultrasonically cleaned in acetone. After cleaning, white gloves were used in the handling of pins, specimens, and fixtures. Bearing ultimate strength and bearing yield strength (2 percent of pin diameter offset) were determined from the load-strain curves. Bearing tests were conducted at room temperature only.

Precision Modulus

Compressive precision modulus (chord) tests were conducted at room temperature in accordance with ASTM Method E111 using flat (sheet) type compression specimens. These tests were conducted on specimens which were subsequently tested to determine compressive yield strength and compressive modulus of elasticity. A strain gage, micromeasurement type, was mounted on the two edges of the specimens. Loads were applied using a Baldwin Universal-type testing machine and strains from the two strain gages were measured over a 1/8-inch gage length. The average of the strain readings from the two gages were used in the calculations. Three runs were made on each specimen at two stress intervals. Specimen area calculations were based upon specimen measurements to the nearest 0.0001 inch. The average of at least three area measurements within the gage length was used for all calculations. In this manner the chord modulus were determined.

FIGURE B-1. BEARING TEST SETUP

Fatigue-Crack-Propagation

Each of the multiflawed center-cracked panels were precracked in room air environment at R = 0.0 prior to da/dN data generation. Fatigue cycling at a predetermined gross-area stress level was continued until cracks had initiated at all diamond shaped notches. Following precracking the high humidity environment of 95 percent relative humidity or higher was applied inside a plexiglas chamber. The high humidity was generated by passing heated air through a bubbling water reservoir. The fatigue crack growth testing was conducted at a cyclic frequency of 30 to 35 Hz for the low da/dN and 6 to 30 Hz for the intermediate da/dN. The maximum cyclic stress level was maintained constant with the R ratio changed to the test level of 0.10, 0.25, or 0.50. If fatigue crack growth did not occur within a reasonable number of cycles, the maximum cyclic stress level was increased in small increments, usually 250 psi, until the precrack started to grow. In some cases, the precrack started without an increase in stress level. This resulted in exceeding the threshold ΔK at that R ratio.

The fourth panel test of each alloy was designed as a catch-up or verification test of threshold ΔK. Based on data generated by the other panels, cycling stress levels were selected to measure threshold ΔK. These levels were below those previously tested at R = 0.50 Threshold levels were then determined at that maximum cyclic stress level at R = 0.50 followed by R = 0.25 and R = 0.10.

The 4-inch wide panels were utilized to generate da/dN data in the intermediate range. In order to cover the range of ΔK = 4.0 to 10.0 ksi$\sqrt{\text{in.}}$, the da/dN data at a given R ratio were generated in steps or increments with increasing stress ranges due to limiting load capacity of the machine and the panel crack size and width.

APPENDIX C

FATIGUE-CRACK-PROPAGATION DATA

TABLE C-1. FATIGUE-CRACK-PROPAGATION DATA FOR 7075-T7351 AT R = 0.500

SPECIMEN NO.= AL-1-1-.5 YIELD STRENGTH= 60.46 THICKNESS= 0.500 WIDTH= 6.000

SPECIMEN TYPE=CC, MAXIMUM STRESS OR LOAD= 3.000 STRESS RATIO= 0.500

BASIC DATA		DA/DN CALCULATIONS			DAMAGE PARAMETER	
A IN.	N CYCLES	SIMPLE SLOPE(A)	SIMPLE SLOPE(P)	THREE PT. DIV.DIFF.	KMAX	DELTA K
0.315	.		.E+00	.E+00	3.006	1.503
		0.9076E-07			3.216	1.608
0.406	1000000.		0.7410E-07	0.7410E-07	3.426	1.713
		0.5750E-07			3.550	1.775
0.464	2000000.		0.7435E-07	0.7637E-07	3.674	1.837
		0.9323E-07			3.844	1.922
0.547	2893000.		0.9757E-07	0.9711E-07	4.014	2.007
		0.1014E-06			4.211	2.105
0.648	3893000.		0.1130E-06	0.1149E-06	4.408	2.204
		0.1264E-06			4.611	2.306
0.757	4752000.		0.1316E-06	0.1309E-06	4.815	2.407
		0.1361E-06			5.066	2.533
0.893	5751000.		0.1647E-06	0.1802E-06	5.316	2.658
		0.2087E-06			5.566	2.783
1.028	6398000.		0.2428E-06	0.2528E-06	5.816	2.908
		0.2868E-06			6.089	3.044
1.171	6898000.		0.3560E-06	0.3560E-06	6.362	3.181
		0.4252E-06			6.794	3.397
1.384	7398000.		0.5877E-06	0.6706E-06	7.226	3.613
		0.8331E-06			7.874	3.937
1.666	7729000.		.E+00	.E+00	8.521	4.261
0.316	.		.E+00	.E+00	3.009	1.504
		0.1147E-06			3.271	1.636
0.431	1000000.		0.8367E-07	0.8367E-07	3.534	1.767
		0.5260E-07			3.645	1.823
0.483	2000000.		0.7322E-07	0.7569E-07	3.756	1.878
		0.9630E-07			3.929	1.965
0.569	2893000.		0.1073E-06	0.1061E-06	4.103	2.051
		0.1171E-06			4.327	2.164
0.686	3893000.		0.1112E-06	0.1102E-06	4.552	2.276
		0.1042E-06			4.719	2.360
0.776	4752000.		0.1370E-06	0.1324E-06	4.886	2.443
		0.1652E-06			5.190	2.595
0.941	5752000.		0.1789E-06	0.1864E-06	5.494	2.747
		0.2002E-06			5.735	2.668
1.071	6398000.		0.2257E-06	0.2331E-06	5.976	2.988
		0.2586E-06			6.225	3.112
1.200	6898000.		0.3403E-06	0.3403E-06	6.473	3.237
		0.4219E-06			6.903	3.454
1.411	7398000.		0.5960E-06	0.6849E-06	7.342	3.671
		0.8591E-06			8.025	4.013
1.695	7729000.		.E+00	.E+00	8.709	4.354
0.315	.		.E+00	.E+00	3.003	1.502
		0.1018E-06			3.238	1.619
0.417	1000000.		0.6265E-07	0.6265E-07	3.472	1.736
		0.2355E-07			3.523	1.762
0.440	2000000.		0.6604E-07	0.7119E-07	3.574	1.787
		0.1137E-06			3.783	1.892
0.541	2892000.		0.1011E-06	0.1024E-06	3.992	1.996
		0.8980E-07			4.168	2.084
0.631	3892000.		0.1109E-06	0.1144E-06	4.343	2.171
		0.1356E-06			4.562	2.281
0.748	4751000.		0.1672E-06	0.1626E-06	4.781	2.391
		0.1944E-06			5.139	2.570
0.942	5751000.		0.1971E-06	0.1966E-06	5.498	2.749
		0.2012E-06			5.740	2.870
1.072	6398000.		0.2346E-06	0.2444E-06	5.983	2.991
		0.2778E-06			6.250	3.125
1.211	6898000.		0.3580E-06	0.3530E-06	6.518	3.259
		0.4383E-06			6.973	3.486
1.430	7398000.		0.5969E-06	0.6778E-06	7.428	3.714
		0.8364E-06			8.101	4.050
1.707	7729000.		.E+00	.E+00	8.774	4.387

NOTE: Simple slope (A) - Slope between points and assigned to point.
Simple slope (P) - Slope between points and assigned to mid-point.
Three-point-divided difference - considers averaging of three adjacent points for rate calculation.

TABLE C-1. (CONTINUED)

BASIC DATA A IN.	N CYCLES	DA/DN CALCULATIONS SIMPLE SLOPE(A)	SIMPLE SLOPE(P)	THREE PT. DIV.DIFF.	DAMAGE PARAMETER KMAX	DELTA K
0.314	.		.E+00	.E+00	3.001	1.501
		0.1061E-06			3.250	1.625
0.422	1000000.		0.6285E-07	0.6285E-07	3.498	1.749
		0.1765E-07			3.536	1.768
0.440	2000000.		0.5795E-07	0.6283E-07	3.574	1.787
		0.1031E-06			3.764	1.882
0.532	2892000.		0.1029E-06	0.1029E-06	3.955	1.977
		0.1027E-06			4.155	2.078
0.635	3892000.		0.1286E-06	0.1329E-06	4.356	2.178
		0.1568E-06			4.612	2.306
0.771	4751000.		0.1725E-06	0.1706E-06	4.868	2.434
		0.1843E-06			5.208	2.604
0.956	5751000.		0.2027E-06	0.2128E-06	5.547	2.774
		0.2312E-06			5.827	2.914
1.105	6398000.		0.2767E-06	0.2900E-06	6.107	3.053
		0.3355E-06			6.435	3.218
1.273	6898000.		0.4701E-06	0.4701E-06	6.764	3.382
		0.6047E-06			7.430	3.715
1.575	7396000.		.E+00	.E+00	8.097	4.048

SPECIMEN NO.= AL-6-1A-.5 YIELD STRENGTH= 64.47 THICKNESS= 0.475 WIDTH= 6.000

SPECIMEN TYPE=CC, MAXIMUM STRESS OR LOAD= 8.000 STRESS RATIO= 0.500

0.437	680000.		.E+00	.E+00	9.500	4.750
		0.1725E-05			9.598	4.799
0.455	690000.		0.1575E-05	0.1575E-05	9.696	4.848
		0.1425E-05			9.775	4.888
0.469	700000.		0.1660E-05	0.1660E-05	9.855	4.928
		0.1895E-05			9.960	4.980
0.488	710000.		0.1745E-05	0.1745E-05	10.065	5.033
		0.1595E-05			10.153	5.076
0.504	720000.		0.1845E-05	0.1845E-05	10.240	5.120
		0.2095E-05			10.353	5.177
0.525	730000.		0.2262E-05	0.2262E-05	10.467	5.233
		0.2430E-05			10.596	5.298
0.549	740000.		0.2205E-05	0.2205E-05	10.726	5.363
		0.1980E-05			10.830	5.415
0.569	750000.		0.2530E-05	0.2530E-05	10.935	5.467
		0.3080E-05			11.095	5.547
0.600	760000.		0.3138E-05	0.3138E-05	11.255	5.628
		0.3195E-05			11.419	5.710
0.632	770000.		0.3440E-05	0.3440E-05	11.584	5.792
		0.3685E-05			11.770	5.885
0.668	780000.		.E+00	.E+00	11.957	5.979
0.510	680000.		.E+00	.E+00	10.308	5.154
		0.2685E-05			10.452	5.226
0.537	690000.		0.1875E-05	0.1875E-05	10.597	5.298
		0.1065E-05			10.653	5.327
0.547	700000.		0.1497E-05	0.1497E-05	10.710	5.355
		0.1930E-05			10.812	5.406
0.567	710000.		0.2168E-05	0.2167E-05	10.914	5.457
		0.2405E-05			11.039	5.520
0.591	720000.		0.2207E-05	0.2207E-05	11.165	5.582
		0.2010E-05			11.269	5.634
0.611	730000.		0.2562E-05	0.2562E-05	11.372	5.686
		0.3115E-05			11.532	5.766
0.642	740000.		0.2898E-05	0.2898E-05	11.691	5.846
		0.2680E-05			11.827	5.913
0.669	750000.		0.2828E-05	0.2828E-05	11.962	5.981
		0.2975E-05			12.112	6.056
0.699	760000.		0.2887E-05	0.2887E-05	12.261	6.131
		0.2800E-05			12.401	6.200
0.727	770000.		0.3192E-05	0.3192E-05	12.540	6.270
		0.3585E-05			12.718	6.359
0.762	780000.		.E+00	.E+00	12.896	6.448
0.469	680000.		.E+00	.E+00	9.854	4.927
		0.1650E-05			9.946	4.973
0.485	690000.		0.1657E-05	0.1657E-05	10.037	5.019
		0.1665E-05			10.129	5.064
0.502	700000.		0.1662E-05	0.1662E-05	10.220	5.110
		0.1660E-05			10.310	5.155

TABLE C-1. (CONTINUED)

BASIC DATA A IN.	N CYCLES	DA/DN CALCULATIONS SIMPLE SLOPE(A)	SIMPLE SLOPE(P)	THREE PT. DIV.DIFF.	DAMAGE PARAMETER KMAX	DELTA K
0.518	710000.		0.1748E-05	0.1748E-05	10.400	5.200
		0.1835E-05			10.498	5.249
0.537	720000.		0.1923E-05	0.1923E-05	10.597	5.298
		0.2010E-05			10.703	5.352
0.557	730000.		0.2150E-05	0.2150E-05	10.810	5.405
		0.2290E-05			10.930	5.465
0.580	740000.		0.2318E-05	0.2317E-05	11.050	5.525
		0.2345E-05			11.172	5.586
0.603	750000.		0.2370E-05	0.2370E-05	11.294	5.647
		0.2395E-05			11.417	5.708
0.627	760000.		0.2557E-05	0.2557E-05	11.540	5.770
		0.2720E-05			11.678	5.839
0.654	770000.		0.2805E-05	0.2805E-05	11.816	5.908
		0.2890E-05			11.962	5.981
0.683	780000.		.E+00	.E+00	12.108	6.054
0.415	680000.		.E+00	.E+00	9.239	4.620
		0.1855E-05			9.346	4.673
0.433	690000.		0.1565E-05	0.1565E-05	9.454	4.727
		0.1275E-05			9.527	4.763
0.446	700000.		0.1662E-05	0.1662E-05	9.599	4.800
		0.2050E-05			9.715	4.857
0.467	710000.		0.2095E-05	0.2095E-05	9.830	4.915
		0.2140E-05			9.949	4.974
0.488	720000.		0.2235E-05	0.2235E-05	10.068	5.034
		0.2330E-05			10.195	5.097
0.511	730000.		0.2368E-05	0.2368E-05	10.322	5.161
		0.2405E-05			10.451	5.226
0.535	740000.		0.2698E-05	0.2697E-05	10.581	5.290
		0.2990E-05			10.739	5.369
0.565	750000.		0.3027E-05	0.3027E-05	10.897	5.449
		0.3065E-05			11.057	5.529
0.596	760000.		0.3278E-05	0.3278E-05	11.217	5.608
		0.3490E-05			11.396	5.698
0.631	770000.		0.3565E-05	0.3565E-05	11.576	5.788
		0.3640E-05			11.761	5.880
0.667	780000.		.E+00	.E+00	11.945	5.973

SPECIMEN NO.= AL-6-1B-.5 YIELD STRENGTH= 64.47 THICKNESS= 0.475 WIDTH= 4.000
SPECIMEN TYPE=CC, MAXIMUM STRESS OR LOAD= 11.500 STRESS RATIO= 0.500

0.672	780400.		.E+00	.E+00	17.971	8.986
		0.6850E-05			18.031	9.016
0.679	781400.		0.9400E-05	0.8125E-05	18.091	9.045
		0.1067E-04			18.279	9.139
0.700	783400.		0.1056E-04	0.1056E-04	18.466	9.233
		0.1045E-04			18.651	9.325
0.721	785400.		0.9963E-05	0.9963E-05	18.836	9.418
		0.9475E-05			19.005	9.502
0.740	787400.		0.1189E-04	0.1189E-04	19.174	9.587
		0.1430E-04			19.431	9.716
0.769	789400.		0.1490E-04	0.1490E-04	19.689	9.844
		0.1550E-04			19.972	9.986
0.800	791400.		0.1530E-04	0.1530E-04	20.255	10.128
		0.1510E-04			20.536	10.268
0.830	793400.		0.1605E-04	0.1605E-04	20.817	10.409
		0.1700E-04			21.140	10.570
0.864	795400.		0.1821E-04	0.1781E-04	21.463	10.731
		0.1902E-04			22.023	11.011
0.921	798400.		0.2238E-04	0.2238E-04	22.582	11.291
		0.2573E-04			23.385	11.693
0.998	801400.		0.2933E-04	0.2933E-04	24.188	12.094
		0.3293E-04			25.313	12.657
1.097	804400.		0.3633E-04	0.4993E-04	26.439	13.220
		0.5333E-04			26.833	13.417
1.129	805000.		.E+00	.E+00	27.227	13.614
0.766	780400.		.E+00	.E+00	19.641	9.820
		0.9500E-05			19.727	9.863
0.776	781400.		0.1058E-04	0.1004E-04	19.813	9.907
		0.1112E-04			20.017	10.008
0.798	783400.		0.1206E-04	0.1206E-04	20.220	10.110
		0.1300E-04			20.462	10.231

TABLE C-1. (CONTINUED)

BASIC DATA A IN.	N CYCLES	DA/DN CALCULATIONS SIMPLE SLOPE(A)	SIMPLE SLOPE(P)	THREE PT. DIV.DIFF.	DAMAGE PARAMETER KMAX	DELTA K
0.824	785400.		0.1291E-04	0.1291E-04	20.703	10.351
		0.1282E-04			20.945	10.472
0.849	787400.		0.1355E-04	0.1355E-04	21.186	10.593
		0.1427E-04			21.461	10.730
0.878	789400.		0.1464E-04	0.1464E-04	21.735	10.867
		0.1500E-04			22.029	11.015
0.908	791400.		0.1726E-04	0.1726E-04	22.324	11.162
		0.1952E-04			22.718	11.359
0.947	793400.		0.1869E-04	0.1869E-04	23.113	11.556
		0.1785E-04			23.485	11.743
0.983	795400.		0.2271E-04	0.2109E-04	23.858	11.929
		0.2595E-04			24.720	12.360
1.061	798400.		0.2774E-04	0.2774E-04	25.581	12.791
		0.2953E-04			26.662	13.331
1.149	801400.		0.4084E-04	0.4084E-04	27.744	13.872
		0.5215E-04			30.029	15.015
1.306	804400.		0.5856E-04	0.8418E-04	32.315	16.158
		0.9058E-04			33.268	16.634
1.360	805000.		.E+00	.E+00	34.220	17.110
0.687	780400.		.E+00	.E+00	18.238	9.119
		0.9800E-05			18.324	9.162
0.697	781400.		0.1025E-04	0.1003E-04	18.411	9.205
		0.1047E-04			18.596	9.298
0.718	783400.		0.9537E-05	0.9537E-05	18.781	9.390
		0.8600E-05			18.934	9.467
0.735	785400.		0.9437E-05	0.9437E-05	19.087	9.543
		0.1028E-04			19.271	9.636
0.756	787400.		0.1149E-04	0.1149E-04	19.456	9.728
		0.1270E-04			19.686	9.843
0.781	789400.		0.1271E-04	0.1271E-04	19.916	9.958
		0.1272E-04			20.150	10.075
0.807	791400.		0.1352E-04	0.1352E-04	20.384	10.192
		0.1432E-04			20.651	10.326
0.835	793400.		0.1492E-04	0.1492E-04	20.919	10.459
		0.1553E-04			21.214	10.607
0.866	795400.		0.1675E-04	0.1634E-04	21.510	10.755
		0.1757E-04			22.027	11.014
0.919	798400.		0.1922E-04	0.1922E-04	22.544	11.272
		0.2087E-04			23.190	11.595
0.982	801400.		0.2347E-04	0.2347E-04	23.835	11.917
		0.2608E-04			24.700	12.350
1.060	804400.		0.2751E-04	0.3324E-04	25.565	12.782
		0.3467E-04			25.808	12.904
1.081	805000.		.E+00	.E+00	26.051	13.025
0.673	780400.		.E+00	.E+00	17.985	8.993
		0.1420E-04			18.110	9.055
0.687	781400.		0.1232E-04	0.1326E-04	18.234	9.117
		0.1137E-04			18.434	9.217
0.710	783400.		0.1331E-04	0.1331E-04	18.635	9.317
		0.1525E-04			18.906	9.453
0.740	785400.		0.1419E-04	0.1419E-04	19.177	9.589
		0.1313E-04			19.413	9.707
0.767	787400.		0.1466E-04	0.1466E-04	19.650	9.825
		0.1620E-04			19.946	9.973
0.799	789400.		0.1744E-04	0.1744E-04	20.242	10.121
		0.1867E-04			20.590	10.295
0.836	791400.		0.1981E-04	0.1981E-04	20.937	10.469
		0.2095E-04			21.338	10.669
0.878	793400.		0.2209E-04	0.2209E-04	21.739	10.869
		0.2322E-04			22.198	11.099
0.925	795400.		0.2476E-04	0.2425E-04	22.657	11.328
		0.2578E-04			23.464	11.732
1.002	798400.		0.3296E-04	0.3296E-04	24.271	12.136
		0.4013E-04			25.667	12.834
1.122	801400.		0.5726E-04	0.5726E-04	27.063	13.532
		0.7438E-04			30.378	15.189
1.346	804400.		.E+00	.E+00	33.694	16.847

TABLE C-2. FATIGUE-CRACK-PROPAGATION DATA FOR 7075-T7351 AT R = 0.250

SPECIMEN NO.= AL-4-1-.25 YIELD STRENGTH= 60.46 THICKNESS= 0.500 WIDTH= 6.000
SPECIMEN TYPE=CC, MAXIMUM STRESS OR LOAD= 2.500 STRESS RATIO= 0.250

BASIC DATA A IN.	N CYCLES	DA/DN CALCULATIONS SIMPLE SLOPE(A)	SIMPLE SLOPE(B)	THREE PT. DIV.DIFF.	DAMAGE PARAMETER KMAX	DELTA K
0.375	30076000.		.E+00	.E+00	2.738	2.054
		0.3427E-07			2.787	2.091
0.401	30842000.		0.4209E-07	0.4024E-07	2.837	2.127
		0.4916E-07			2.924	2.193
0.449	31845000.		0.6296E-07	0.6454E-07	3.011	2.258
		0.7944E-07			3.135	2.351
0.521	32752000.		0.8841E-07	0.8758E-07	3.259	2.444
		0.9653E-07			3.418	2.563
0.618	33752000.		0.1177E-06	0.1195E-06	3.576	2.682
		0.1467E-06			3.780	2.835
0.748	34675000.		0.1516E-06	0.1508E-06	3.984	2.988
		0.1818E-06			4.232	3.174
0.909	35675000.		0.1990E-06	0.2037E-06	4.481	3.361
		0.2415E-06			4.820	3.615
1.127	36877000.		0.2719E-06	0.3417E-06	5.160	3.870
		0.3771E-06			5.325	3.994
1.229	36851000.		.E+00	.E+00	5.491	4.118
0.384	30076000.		.E+00	.E+00	2.774	2.080
		0.5395E-07			2.850	2.137
0.425	30842000.		0.7465E-07	0.6973E-07	2.926	2.194
		0.9053E-07			3.084	2.313
0.516	31845000.		0.9291E-07	0.9316E-07	3.242	2.432
		0.9553E-07			3.385	2.539
0.603	32752000.		0.1107E-06	0.1089E-06	3.528	2.646
		0.1236E-06			3.723	2.792
0.727	33752000.		0.1426E-06	0.1441E-06	3.919	2.939
		0.1661E-06			4.150	3.113
0.877	34675000.		0.1901E-06	0.1881E-06	4.382	3.286
		0.2151E-06			4.715	3.536
1.092	35675000.		0.3021E-06	0.3115E-06	5.048	3.786
		0.3904E-06			5.658	4.244
1.452	36577000.		.E+00	.E+00	6.268	4.701
0.340	30076000.		.E+00	.E+00	2.663	1.952
		0.2702E-07			2.644	1.983
0.361	30842000.		0.3259E-07	0.3127E-07	2.684	2.013
		0.3684E-07			2.754	2.065
0.398	31845000.		0.4580E-07	0.4682E-07	2.824	2.118
		0.5584E-07			2.915	2.187
0.448	32752000.		0.6974E-07	0.6845E-07	3.007	2.255
		0.8285E-07			3.149	2.361
0.530	33752000.		0.9601E-07	0.9713E-07	3.290	2.468
		0.1178E-06			3.457	2.593
0.633	34675000.		0.1234E-06	0.1225E-06	3.624	2.718
		0.1501E-06			3.835	2.876
0.768	35675000.		0.1484E-06	0.1499E-06	4.046	3.035
		0.1952E-06			4.272	3.204
0.915	36577000.		0.1737E-06	0.1977E-06	4.496	3.374
		0.2042E-06			4.588	3.439
0.972	36851000.		.E+00	.E+00	4.674	3.505
0.388	30076000.		.E+00	.E+00	2.788	2.091
		0.0661E-08			2.801	2.101
0.395	30842000.		0.2417E-07	0.2051E-07	2.813	2.110
		0.3599E-07			2.879	2.159
0.431	31845000.		0.2940E-07	0.2870E-07	2.945	2.209
		0.2211E-07			2.981	2.236
0.451	32752000.		0.2727E-07	0.2679E-07	3.017	2.262
		0.3195E-07			3.072	2.304
0.483	33752000.		0.6084E-07	0.6325E-07	3.128	2.346
		0.9215E-07			3.271	2.453
0.568	34675000.		0.9977E-07	0.9918E-07	3.414	2.560
		0.1058E-06			3.585	2.689
0.675	35675000.		0.1173E-06	0.1184E-06	3.756	2.817
		0.1299E-06			3.937	2.953
0.791	36577000.		0.1270E-06	0.1225E-06	4.117	3.088
		0.1206E-06			4.168	3.126
0.824	36851000.		.E+00	.E+00	4.219	3.164

TABLE C-2. (CONTINUED)

SPECIMEN NO.= AL-3-1-.25 YIELD STRENGTH= 60.46 THICKNESS= 0.500 WIDTH= 6.000

SPECIMEN TYPE=CC, MAXIMUM STRESS OR LOAD= 3.000 STRESS RATIO= 0.250

BASIC DATA		DA/DN CALCULATIONS			DAMAGE PARAMETER	
A IN.	N CYCLES	SIMPLE SLOPE(A)	SIMPLE SLOPE(P)	THREE PT. DIV.DIFF.	KMAX	DELTA K
0.339	12255000.		.E+00	.E+00	3.117	2.338
		0.9615E-07			3.334	2.500
0.435	13256000.		0.1057E-06	0.1061E-06	3.551	2.663
		0.1156E-06			3.781	2.836
0.540	14322000.		0.2265E-06	0.1187E-05	4.011	3.009
		0.1293E-05			4.262	3.197
0.676	14322000.		.E+00	.E+00	4.513	3.385
0.327	12255000.		.E+00	.E+00	3.062	2.296
		0.9216E-07			3.273	2.455
0.419	13256000.		0.9956E-07	0.9978E-07	3.484	2.613
		0.1071E-06			3.700	2.775
0.523	14322000.		0.2187E-06	0.1184E-05	3.917	2.938
		0.1296E-05			4.170	3.127
0.652	14322000.		.E+00	.E+00	4.423	3.317
0.390	12255000.		.E+00	.E+00	3.354	2.516
		0.8926E-07			3.547	2.660
0.479	13256000.		0.1069E-06	0.1097E-06	3.739	2.804
		0.1293E-06			3.989	2.991
0.604	14322000.		0.2627E-06	0.1417E-05	4.238	3.179
		0.1590E-05			4.531	3.398
0.759	14322000.		.E+00	.E+00	4.824	3.618
0.524	12254000.		.E+00	.E+00	3.920	2.940
		0.0000E-06			3.921	2.941
0.524	12256000.		0.1804E-06	0.4997E-06	3.922	2.942
		0.1501E-06			4.271	3.203
0.704	13256000.		0.2400E-06	0.2421E-06	4.619	3.464
		0.3200E-06			5.196	3.869
0.996	14322000.		.E+00	.E+00	5.697	4.273

SPECIMEN NO.= AL-7-1-.25 YIELD STRENGTH= 54.47 THICKNESS= 0.475 WIDTH= 4.000

SPECIMEN TYPE=CC, MAXIMUM STRESS OR LOAD= 6.000 STRESS RATIO= 0.250

0.356	60000.		.E+00	.E+00	6.469	4.852
		0.9675E-06			6.564	4.923
0.375	80000.		0.8888E-06	0.8889E-06	6.658	4.993
		0.8100E-06			6.736	5.052
0.391	100000.		0.1019E-05	0.1319E-05	6.814	5.110
		0.1227E-05			6.930	5.197
0.416	120000.		0.1327E-05	0.1327E-05	7.046	5.285
		0.1427E-05			7.179	5.385
0.445	140000.		0.1561E-05	0.1561E-05	7.313	5.485
		0.1695E-05			7.469	5.602
0.478	160000.		0.1784E-05	0.1784E-05	7.625	5.719
		0.1872E-05			7.795	5.846
0.516	180000.		0.1794E-05	0.1794E-05	7.956	5.974
		0.1715E-05			8.121	6.090
0.550	200000.		0.2121E-05	0.2121E-05	8.275	6.207
		0.2528E-05			8.513	6.377
0.601	220000.		0.2741E-05	0.2741E-05	8.731	6.549
		0.2955E-05			8.998	6.749
0.660	240000.		0.3480E-05	0.3480E-05	9.266	6.949
		0.4005E-05			9.634	7.226
0.740	260000.		0.4277E-05	0.4548E-05	10.003	7.502
		0.4820E-05			10.230	7.673
0.788	270000.		0.5795E-05	0.5308E-05	10.458	7.843
		0.6282E-05			11.093	8.312
0.914	290000.		0.6839E-05	0.7187E-05	11.708	8.781
		0.7744E-05			12.226	9.169
1.009	302300.		.E+00	.E+00	12.744	9.558
0.366	60000.		.E+00	.E+00	6.572	4.929
		0.9275E-06			6.651	4.995
0.385	80000.		0.1182E-05	0.1182E-05	6.751	5.063
		0.1438E-05			6.887	5.165
0.414	100000.		0.1365E-05	0.1365E-05	7.024	5.268
		0.1293E-05			7.145	5.359

TABLE C-2. (CONTINUED)

BASIC DATA A IN.	N CYCLES	DA/DN CALCULATIONS SIMPLE SLOPE(A)	SIMPLE SLOPE(P)	THREE PT. DIV.DIFF.	DAMAGE PARAMETER KMAX	DELTA K
0.440	120000.		0.1584E-05	0.1584E-05	7.265	5.443
		0.1975E-05			7.439	5.573
0.477	140000.		0.2001E-05	0.2001E-05	7.611	5.703
		0.2127E-05			7.805	5.854
0.520	160000.		0.2204E-05	0.2204E-05	7.999	5.993
		0.2280E-05			8.204	6.153
0.565	180000.		0.2498E-05	0.2498E-05	8.410	6.308
		0.2715E-05			8.655	6.491
0.619	200000.		0.3030E-05	0.3030E-05	8.900	6.675
		0.3345E-05			9.204	6.903
0.686	220000.		0.3940E-05	0.3940E-05	9.507	7.131
		0.4535E-05			9.93[illegible]	7.447
0.777	240000.		0.5425E-05	0.5425E-05	10.352	7.764
		0.6315E-05			10.976	8.232
0.903	260000.		0.7172E-05	0.8028E-05	11.600	8.700
		0.8885E-05			12.077	9.057
0.992	270000.		0.1133E-04	0.1011E-04	12.554	9.415
		0.1255E-04			14.195	10.646
1.243	290000.		.E+00	.E+00	15.836	11.877
0.360	60000.		.E+00	.E+00	6.505	4.879
		0.9150E-06			6.594	4.946
0.378	80000.		0.9300E-06	0.9300E-06	6.683	5.012
		0.9450E-06			6.774	5.080
0.397	100000.		0.9762E-06	0.9762E-06	6.864	5.148
		0.1007E-05			6.959	5.220
0.417	120000.		0.1785E-05	0.1785E-05	7.055	5.291
		0.2562E-05			7.292	5.469
0.468	140000.		0.1449E-05	0.1449E-05	7.530	5.648
		0.3350E-06			7.561	5.671
0.475	160000.		0.1100E-05	0.1100E-05	7.592	5.694
		0.1865E-05			7.762	5.821
0.512	180000.		0.1996E-05	0.1996E-05	7.932	5.949
		0.2128E-05			8.124	6.093
0.555	200000.		0.2518E-05	0.2518E-05	8.316	6.237
		0.2908E-05			8.578	6.434
0.613	220000.		0.3125E-05	0.3125E-05	8.840	6.630
		0.3342E-05			9.143	6.857
0.680	240000.		0.3687E-05	0.3687E-05	9.447	7.085
		0.4032E-05			9.820	7.365
0.760	260000.		0.4420E-05	0.4808E-05	10.194	7.646
		0.5195E-05			10.442	7.832
0.812	270000.		0.5920E-05	0.5558E-05	10.690	8.018
		0.6282E-05			11.326	8.495
0.938	290000.		0.7070E-05	0.7562E-05	11.962	8.972
		0.8350E-05			12.536	9.402
1.041	302300.		.E+00	.E+00	13.110	9.832
0.344	60000.		.E+00	.E+00	6.355	4.766
		0.1160E-05			6.459	4.852
0.367	80000.		0.9712E-06	0.9712E-06	6.583	4.937
		0.7825E-06			6.658	4.994
0.383	100000.		0.7800E-06	0.7800E-06	6.734	5.051
		0.7775E-06			6.808	5.106
0.399	120000.		0.1231E-05	0.1231E-05	6.883	5.162
		0.1685E-05			7.041	5.281
0.432	140000.		0.1391E-05	0.1391E-05	7.200	5.400
		0.1098E-05			7.302	5.476
0.454	160000.		0.1260E-05	0.1260E-05	7.403	5.552
		0.1422E-05			7.534	5.650
0.483	180000.		0.1626E-05	0.1626E-05	7.664	5.748
		0.1830E-05			7.831	5.873
0.519	200000.		0.2066E-05	0.2066E-05	7.997	5.998
		0.2302E-05			8.205	6.154
0.565	220000.		0.2592E-05	0.2592E-05	8.413	6.310
		0.2883E-05			8.673	6.505
0.623	240000.		0.3354E-05	0.3354E-05	8.933	6.699
		0.3825E-05			9.281	6.961
0.700	260000.		0.4117E-05	0.4408E-05	9.629	7.222
		0.4700E-05			9.947	7.385
0.747	270000.		0.5320E-05	0.5910E-05	10.265	7.549
		0.5630E-05			10.608	7.956
0.859	290000.		0.6183E-05	0.6529E-05	11.151	8.364
		0.7081E-05			11.601	8.701
0.946	302300.		.E+00	.E+00	12.051	9.038

TABLE C-3. FATIGUE-CRACK-PROPAGATION DATA FOR 7075-T7351 AT R = 0.100

SPECIMEN NO.= AL-2-1-.1 YIELD STRENGTH= 60.46 THICKNESS= 0.500 WIDTH= 6.000

SPECIMEN TYPE=CC, MAXIMUM STRESS OR LOAD= 4.000 STRESS RATIO= 0.100

BASIC DATA		DA/DN CALCULATIONS			DAMAGE PARAMETER	
A IN.	N CYCLES	SIMPLE SLOPE(A)	SIMPLE SLOPE(P)	THREE PT. DIV.DIFF.	KMAX	DELTA K
0.317	.		.E+00	.E+00	4.021	3.619
		0.2723E-06			4.363	3.927
0.430	411700.		0.2904E-06	0.4218E-06	4.705	4.234
		0.4400E-06			4.768	4.291
0.451	461700.		0.6098E-06	0.4824E-06	4.830	4.347
		0.6522E-06			5.183	4.665
0.582	661700.		0.7285E-06	0.9063E-06	5.536	4.982
		0.9825E-06			5.688	5.119
0.641	721700.		0.1150E-05	0.1183E-05	5.839	5.255
		0.1351E-05			6.010	5.409
0.708	771700.		0.1748E-05	0.1748E-05	6.180	5.562
		0.2145E-05			6.445	5.800
0.816	821700.		0.2870E-05	0.2870E-05	6.710	6.039
		0.3596E-05			7.152	6.437
0.995	871700.		0.4943E-05	0.4942E-05	7.594	6.834
		0.6289E-05			8.407	7.566
1.310	921700.		0.1104E-04	0.1104E-04	9.221	8.299
		0.1580E-04			12.228	11.006
2.100	971700.		.E+00	.E+00	15.236	13.712
0.316	.		.E+00	.E+00	4.015	3.614
		0.1446E-06			4.202	3.782
0.376	411700.		0.1898E-06	0.5168E-06	4.389	3.950
		0.5620E-06			4.473	4.026
0.404	461700.		0.3770E-06	0.5158E-06	4.557	4.101
		0.3308E-06			4.746	4.272
0.470	661700.		0.3008E-06	0.2308E-06	4.936	4.442
		0.2008E-06			4.969	4.472
0.482	721700.		0.2955E-06	0.3144E-06	5.003	4.502
		0.4090E-06			5.059	4.553
0.503	771700.		0.4960E-06	0.4980E-06	5.115	4.603
		0.5870E-06			5.194	4.675
0.532	821700.		0.5530E-06	0.5530E-06	5.273	4.746
		0.5190E-06			5.342	4.808
0.558	871700.		0.4740E-06	0.4740E-06	5.411	4.870
		0.4290E-06			5.467	4.921
0.580	921700.		0.6210E-06	0.6210E-06	5.524	4.971
		0.8130E-06			5.629	5.066
0.620	971700.		.E+00	.E+00	5.734	5.160
0.316	.		.E+00	.E+00	4.010	3.609
		0.1562E-06			4.211	3.790
0.380	411700.		0.2001E-06	0.5181E-06	4.413	3.971
		0.5620E-06			4.496	4.047
0.408	461700.		0.3776E-06	0.5159E-06	4.580	4.122
		0.3315E-06			4.769	4.292
0.474	661700.		0.3471E-06	0.3836E-06	4.958	4.462
		0.3992E-06			5.024	4.522
0.498	721700.		0.3977E-06	0.3974E-06	5.090	4.581
		0.3960E-06			5.144	4.630
0.518	771700.		0.4515E-06	0.4515E-06	5.198	4.678
		0.5070E-06			5.266	4.739
0.543	821700.		0.5170E-06	0.5170E-06	5.333	4.800
		0.5270E-06			5.403	4.863
0.570	871700.		0.5910E-06	0.5910E-06	5.473	4.925
		0.6550E-06			5.558	5.002
0.603	921700.		0.6725E-06	0.6725E-06	5.643	5.079
		0.6900E-06			5.731	5.158
0.637	971700.		.E+00	.E+00	5.820	5.238
0.317	.		.E+00	.E+00	4.020	3.618
		0.1938E-06			4.267	3.841
0.397	411700.		0.2101E-06	0.3277E-06	4.515	4.063
		0.3440E-06			4.565	4.109
0.414	461700.		0.4062E-06	0.3595E-06	4.616	4.154
		0.4218E-06			4.854	4.368
0.499	661700.		0.4363E-06	0.4704E-06	5.092	4.582
		0.4850E-06			5.170	4.653
0.528	721700.		0.5473E-06	0.5597E-06	5.249	4.724
		0.6220E-06			5.332	4.799

TABLE C-3. (CONTINUED)

BASIC DATA A IN.	N CYCLES	DA/DN CALCULATIONS SIMPLE SLOPE(A)	SIMPLE SLOPE(P)	THREE PT. DIV.DIFF.	DAMAGE PARAMETER KMAX	DELTA K
0.559	771700.		0.7140E-06	0.7140E-06	5.414	4.873
		0.8060E-06			5.520	4.968
0.599	821700.		0.8085E-06	0.8085E-06	5.625	5.062
		0.8110E-06			5.729	5.156
0.640	871700.		0.9875E-06	0.9875E-06	5.833	5.250
		0.1164E-05			5.980	5.382
0.698	921700.		0.1234E-05	0.1234E-05	6.126	5.514
		0.1305E-05			6.288	5.660
0.763	971700.		.E+00	.E+00	6.451	5.805

SPECIMEN NO.= AL-5-1-.1 YIELD STRENGTH= 64.47 THICKNESS= 0.475 WIDTH= 6.000
SPECIMEN TYPE=CC, MAXIMUM STRESS OR LOAD= 5.500 STRESS RATIO= 0.100

0.313	72500.		.E+00	.E+00	5.491	4.942
		0.7000E-07			5.494	4.945
0.314	82500.		0.1250E-07	0.1250E-07	5.497	4.947
		-.4500E-07			5.495	4.946
0.313	92500.		0.9250E-07	0.9250E-07	5.493	4.944
		0.2300E-06			5.503	4.953
0.316	102500.		0.4850E-06	0.4850E-06	5.514	4.962
		0.7400E-06			5.547	4.992
0.323	112500.		0.6575E-06	0.6575E-06	5.580	5.022
		0.5750E-06			5.605	5.045
0.329	122500.		0.6450E-06	0.6450E-06	5.631	5.068
		0.7150E-06			5.662	5.096
0.336	132500.		0.5200E-06	0.5200E-06	5.693	5.124
		0.3250E-06			5.708	5.137
0.339	142500.		0.6625E-06	0.6625E-06	5.722	5.150
		1.0000E-06			5.765	5.188
0.349	152500.		0.8150E-06	0.8150E-06	5.808	5.227
		0.6300E-06			5.835	5.252
0.356	162500.		0.9700E-06	0.9700E-06	5.862	5.276
		0.1310E-05			5.918	5.326
0.369	172500.		0.9975E-06	0.9975E-06	5.973	5.376
		0.6850E-06			6.002	5.402
0.376	182500.		0.7300E-06	0.7300E-06	6.030	5.427
		0.7750E-06			6.063	5.456
0.383	192500.		0.9700E-06	0.9700E-06	6.095	5.485
		0.1165E-05			6.143	5.529
0.395	202500.		0.1412E-05	0.1412E-05	6.191	5.572
		0.1660E-05			6.258	5.632
0.412	212500.		0.1420E-05	0.1420E-05	6.325	5.693
		0.1180E-05			6.373	5.735
0.423	222500.		0.1652E-05	0.1652E-05	6.420	5.778
		0.2125E-05			6.504	5.853
0.445	232500.		0.1820E-05	0.1820E-05	6.587	5.929
		0.1515E-05			6.646	5.982
0.460	242500.		0.1350E-05	0.1350E-05	6.705	6.035
		0.1185E-05			6.751	6.076
0.472	252500.		0.1748E-05	0.1748E-05	6.796	6.117
		0.2310E-05			6.864	6.196
0.495	262500.		0.2315E-05	0.2315E-05	6.972	6.274
		0.2320E-05			7.058	6.352
0.518	272500.		0.1950E-05	0.1950E-05	7.145	6.431
		0.1580E-05			7.203	6.483
0.534	282500.		0.2243E-05	0.2243E-05	7.262	6.536
		0.2905E-05			7.368	6.631
0.563	292500.		0.2790E-05	0.2790E-05	7.473	6.726
		0.2675E-05			7.570	6.813
0.589	302500.		0.3000E-05	0.3000E-05	7.666	6.899
		0.3325E-05			7.784	7.005
0.623	312500.		0.3505E-05	0.3505E-05	7.901	7.111
		0.3685E-05			8.030	7.227
0.660	322500.		0.3918E-05	0.3917E-05	8.159	7.343
		0.4150E-05			8.303	7.472
0.701	332500.		0.4183E-05	0.4183E-05	8.446	7.601
		0.4215E-05			8.590	7.731
0.743	342500.		0.4686E-05	0.5392E-05	8.734	7.861
		0.5862E-05			8.814	7.933
0.767	346500.		.E+00	.E+00	8.894	8.005

TABLE C-3. (CONTINUED)

BASIC DATA A IN.	N CYCLES	DA/DN CALCULATIONS SIMPLE SLOPE(A)	SIMPLE SLOPE(P)	THREE PT. DIV.DIFF.	DAMAGE PARAMETER KMAX	DELTA K
0.350	72500.		.E+00	.E+00	5.813	5.231
		0.1930E-05			5.894	5.305
0.369	82500.		0.1628E-05	0.1628E-05	5.976	5.379
		0.1325E-05			6.032	5.429
0.382	92500.		0.1297E-05	0.1297E-05	6.087	5.478
		0.1270E-05			6.139	5.525
0.395	102500.		0.1432E-05	0.1432E-05	6.192	5.572
		0.1595E-05			6.256	5.631
0.411	112500.		0.1560E-05	0.1560E-05	6.321	5.689
		0.1525E-05			6.382	5.744
0.426	122500.		0.1570E-05	0.1570E-05	6.443	5.799
		0.1615E-05			6.507	5.856
0.442	132500.		0.1995E-05	0.1995E-05	6.570	5.913
		0.2375E-05			6.662	5.996
0.466	142500.		0.1798E-05	0.1798E-05	6.754	6.079
		0.1220E-05			6.801	6.121
0.478	152500.		0.1775E-05	0.1775E-05	6.848	6.163
		0.2330E-05			6.936	6.242
0.502	162500.		0.2327E-05	0.2327E-05	7.024	6.321
		0.2325E-05			7.110	6.399
0.525	172500.		0.2190E-05	0.2190E-05	7.197	6.477
		0.2055E-05			7.272	6.545
0.545	182500.		0.2435E-05	0.2435E-05	7.348	6.613
		0.2815E-05			7.450	6.705
0.574	192500.		0.2768E-05	0.2768E-05	7.552	6.797
		0.2720E-05			7.649	6.884
0.601	202500.		0.3105E-05	0.3105E-05	7.746	6.972
		0.3490E-05			7.869	7.082
0.636	212500.		0.3417E-05	0.3417E-05	7.992	7.193
		0.3345E-05			8.109	7.298
0.669	222500.		0.3473E-05	0.3473E-05	8.226	7.403
		0.3600E-05			8.350	7.515
0.705	232500.		0.3918E-05	0.3917E-05	8.474	7.627
		0.4235E-05			8.619	7.757
0.747	242500.		0.4532E-05	0.4532E-05	8.763	7.887
		0.4830E-05			8.927	8.035
0.796	252500.		0.5070E-05	0.5070E-05	9.091	8.182
		0.5310E-05			9.270	8.343
0.849	262500.		0.5852E-05	0.5852E-05	9.450	8.505
		0.6395E-05			9.665	8.699
0.913	272500.		0.7033E-05	0.7033E-05	9.881	8.893
		0.7670E-05			10.141	9.127
0.989	282500.		0.8107E-05	0.8107E-05	10.400	9.360
		0.8545E-05			10.694	9.624
1.075	292500.		0.9662E-05	0.9662E-05	10.987	9.888
		0.1078E-04			11.366	10.229
1.183	302500.		0.1216E-04	0.1216E-04	11.745	10.570
		0.1354E-04			12.242	11.018
1.318	312500.		0.1530E-04	0.1530E-04	12.740	11.466
		0.1707E-04			13.419	12.077
1.489	322500.		0.2098E-04	0.2098E-04	14.098	12.688
		0.2489E-04			15.246	13.721
1.738	332500.		0.3338E-04	0.3338E-04	16.393	14.754
		0.4188E-04			19.136	17.222
2.157	342500.		.E+00	.E+00	21.879	19.691
0.352	72500.		.E+00	.E+00	5.829	5.246
		0.1380E-05			5.888	5.299
0.366	82500.		0.9725E-06	0.9725E-06	5.947	5.352
		0.5650E-06			5.970	5.373
0.371	92500.		0.8800E-06	0.8800E-06	5.994	5.395
		0.1195E-05			6.044	5.439
0.383	102500.		0.1165E-05	0.1165E-05	6.094	5.484
		0.1135E-05			6.140	5.526
0.394	112500.		0.8450E-06	0.8450E-06	6.187	5.568
		0.5550E-06			6.210	5.589
0.400	122500.		0.5675E-06	0.5675E-06	6.232	5.609
		0.5800E-06			6.256	5.630
0.406	132500.		0.5075E-06	0.5075E-06	6.279	5.651
		0.4350E-06			6.297	5.667
0.410	142500.		0.8900E-06	0.8900E-06	6.315	5.683
		0.1345E-05			6.368	5.732

TABLE C-3. (CONTINUED)

BASIC DATA		DA/DN CALCULATIONS			DAMAGE PARAMETER	
A IN.	N CYCLES	SIMPLE SLOPE(A)	SIMPLE SLOPE(P)	THREE PT. DIV.DIFF.	KMAX	DELTA K
0.424	152500.		0.9300E-06	0.9300E-06	6.422	5.780
		0.5150E-06			6.443	5.798
0.429	162500.		0.6450E-06	0.6450E-06	6.463	5.817
		0.7750E-06			6.494	5.844
0.437	172500.		0.5525E-06	0.5525E-06	6.524	5.872
		0.3300E-06			6.537	5.884
0.440	182500.		0.6375E-06	0.6375E-06	6.550	5.895
		0.9450E-06			6.587	5.928
0.449	192500.		0.1138E-05	0.1138E-05	6.624	5.962
		0.1330E-05			6.676	6.008
0.463	202500.		0.9475E-06	0.9475E-06	6.727	6.054
		0.5650E-06			6.749	6.074
0.468	212500.		0.1285E-05	0.1285E-05	6.771	6.094
		0.2005E-05			6.847	6.162
0.488	222500.		0.1403E-05	0.1403E-05	6.923	6.231
		0.8000E-06			6.954	6.258
0.496	232500.		0.1270E-05	0.1270E-05	6.984	6.285
		0.1740E-05			7.049	6.344
0.514	242500.		0.1655E-05	0.1655E-05	7.114	6.402
		0.1570E-05			7.172	6.455
0.529	252500.		0.1663E-05	0.1663E-05	7.230	6.507
		0.1755E-05			7.294	6.565
0.547	262500.		0.1885E-05	0.1885E-05	7.359	6.623
		0.2015E-05			7.432	6.689
0.567	272500.		0.7605E-05	0.7605E-05	7.505	6.754
		0.1320E-04			7.968	7.172
0.699	282500.		0.2513E-05	0.2513E-05	8.432	7.589
		-.8170E-05			8.148	7.333
0.617	292500.		-.2763E-05	-.2763E-05	7.863	7.077
		0.2645E-05			7.956	7.161
0.644	302500.		0.3107E-05	0.3107E-05	8.049	7.244
		0.3570E-05			8.173	7.356
0.679	312500.		0.3383E-05	0.3383E-05	8.297	7.468
		0.3195E-05			8.407	7.566
0.711	322500.		0.3610E-05	0.3610E-05	8.517	7.665
		0.4025E-05			8.655	7.789
0.752	332500.		0.4347E-05	0.4347E-05	8.792	7.913
		0.4670E-05			8.950	8.055
0.798	342500.		0.4289E-05	0.3718E-05	9.109	8.198
		0.3337E-05			9.154	8.238
0.812	346500.		.E+00	.E+00	9.199	8.279
0.316	72500.		.E+00	.E+00	5.520	4.968
		-.4000E-07			5.518	4.966
0.316	82500.		-.2750E-07	-.2750E-07	5.516	4.964
		-.1500E-07			5.515	4.964
0.316	92500.		0.3200E-06	0.3200E-06	5.515	4.963
		0.6550E-06			5.544	4.989
0.322	102500.		0.5200E-06	0.5200E-06	5.573	5.016
		0.3850E-06			5.590	5.031
0.326	112500.		0.9075E-06	0.9075E-06	5.607	5.047
		0.1430E-05			5.670	5.103
0.341	122500.		0.8375E-06	0.8375E-06	5.733	5.159
		0.2450E-06			5.743	5.169
0.343	132500.		0.6550E-06	0.6550E-06	5.754	5.178
		0.1065E-05			5.800	5.220
0.354	142500.		0.8275E-06	0.8275E-06	5.846	5.261
		0.5900E-06			5.871	5.284
0.360	152500.		0.6525E-06	0.6525E-06	5.896	5.306
		0.7150E-06			5.926	5.333
0.367	162500.		0.8025E-06	0.8025E-06	5.956	5.361
		0.8900E-06			5.994	5.394
0.376	172500.		0.7700E-06	0.7700E-06	6.031	5.428
		0.6500E-06			6.058	5.452
0.382	182500.		0.7250E-06	0.7250E-06	6.085	5.476
		0.8000E-06			6.118	5.506
0.390	192500.		0.7225E-06	0.7225E-06	6.151	5.536
		0.6450E-06			6.177	5.560
0.396	202500.		0.8525E-06	0.8525E-06	6.204	5.583
		0.1060E-05			6.247	5.622
0.407	212500.		0.8300E-06	0.8300E-06	6.290	5.661
		0.6000E-06			6.314	5.683
0.413	222500.		0.1048E-05	0.1048E-05	6.338	5.704
		0.1495E-05			6.398	5.758

TABLE C-3. (CONTINUED)

BASIC DATA A IN.	N CYCLES	DA/DN CALCULATIONS SIMPLE SLOPE(A)	SIMPLE SLOPE(P)	THREE PT. DIV.DIFF.	DAMAGE PARAMETER KMAX	DELTA K
0.428	232500.		0.1358E-05	0.1358E-05	6.458	5.812
		0.1220E-05			6.506	5.855
0.440	242500.		0.1245E-05	0.1245E-05	6.554	5.898
		0.1270E-05			6.603	5.943
0.453	252500.		0.1125E-05	0.1125E-05	6.653	5.988
		0.9800E-06			6.691	6.022
0.463	262500.		0.1565E-05	0.1565E-05	6.729	6.056
		0.2150E-05			6.811	6.130
0.484	272500.		0.2153E-05	0.2153E-05	6.893	6.204
		0.2155E-05			6.974	6.277
0.506	282500.		0.1473E-05	0.1473E-05	7.055	6.350
		0.7900E-06			7.085	6.376
0.514	292500.		0.1388E-05	0.1388E-05	7.114	6.403
		0.1965E-05			7.188	6.469
0.534	302500.		0.2202E-05	0.2202E-05	7.261	6.535
		0.2420E-05			7.349	6.614
0.558	312500.		0.3135E-05	0.3135E-05	7.438	6.694
		0.3850E-05			7.576	6.818
0.596	322500.		0.3765E-05	0.3765E-05	7.714	6.943
		0.3680E-05			7.844	7.060
0.633	332500.		0.4005E-05	0.4005E-05	7.974	7.177
		0.4330E-05			8.125	7.313
0.676	342500.		0.4529E-05	0.4826E-05	8.276	7.448
		0.5025E-05			8.345	7.511
0.696	346500.		.E+00	.E+00	8.414	7.573

TABLE C-4. FATIGUE-CRACK-PROPAGATION DATA FOR 7475-T7351 AT R = 0.500

SPECIMEN NO.= AL-3-1-.5 YIELD STRENGTH= 57.00 THICKNESS= 0.530 WIDTH= 6.000
SPECIMEN TYPE=CC, MAXIMUM STRESS OR LOAD= 3.000 STRESS RATIO= 0.500

BASIC DATA		DA/DN CALCULATIONS			DAMAGE PARAMETER	
A IN.	N CYCLES	SIMPLE SLOPE(A)	SIMPLE SLOPE(P)	THREE PT. DIV.DIFF.	KMAX	DELTA K
0.414	41220000.		.E+00	.E+00	3.462	1.731
		0.1420E-07			3.489	1.745
0.427	42090000.		0.3363E-07	0.2364E-07	3.516	1.758
		0.4307E-07			3.678	1.839
0.504	43880000.		0.5412E-07	0.6324E-07	3.840	1.920
		0.7429E-07			3.985	1.993
0.577	44860000.		0.8240E-07	0.8224E-07	4.131	2.065
		0.9035E-07			4.305	2.152
0.667	45860000.		0.8839E-07	0.8825E-07	4.478	2.239
		0.8629E-07			4.629	2.314
0.747	46790000.		0.9712E-07	0.9537E-07	4.779	2.389
		0.1072E-06			4.977	2.488
0.854	47790000.		0.1173E-06	0.1174E-06	5.175	2.587
		0.1275E-06			5.407	2.704
0.981	48780000.		0.1473E-06	0.1471E-06	5.640	2.820
		0.1668E-06			5.954	2.977
1.147	49780000.		0.1709E-06	0.1725E-06	6.269	3.135
		0.1766E-06			6.520	3.260
1.275	50500000.		.E+00	.E+00	6.771	3.385
0.389	41220000.		.E+00	.E+00	3.352	1.675
		0.3385E-07			3.417	1.709
0.413	42090000.		0.4233E-07	0.3797E-07	3.483	1.741
		0.4645E-07			3.658	1.829
0.502	43880000.		0.3767E-07	0.3141E-07	3.833	1.917
		0.2163E-07			3.876	1.938
0.523	44860000.		0.3573E-07	0.3545E-07	3.919	1.960
		0.4955E-07			4.018	2.009
0.573	45860000.		0.2865E-07	0.2708E-07	4.116	2.058
		0.6193E-08			4.127	2.064
0.579	46790000.		0.3634E-07	0.3479E-07	4.139	2.069
		0.6555E-07			4.265	2.133
0.644	47790000.		0.6884E-07	0.6888E-07	4.392	2.196
		0.7217E-07			4.527	2.263
0.716	48780000.		0.8435E-07	0.8422E-07	4.661	2.331
		0.9640E-07			4.840	2.420
0.812	49780000.		0.1002E-06	0.1016E-06	5.019	2.509
		0.1054E-06			5.158	2.579
0.888	50500000.		0.1300E-06	0.1152E-06	5.298	2.649
		0.1338E-06			5.768	2.884
1.140	52300000.		.E+00	.E+00	6.239	3.119
0.392	41220000.		.E+00	.E+00	3.355	1.683
		0.3799E-07			3.438	1.719
0.425	42090000.		0.2771E-07	0.3299E-07	3.511	1.755
		0.2271E-07			3.597	1.799
0.466	43880000.		0.2471E-07	0.2537E-07	3.684	1.842
		0.2837E-07			3.742	1.871
0.494	44860000.		0.4601E-07	0.4566E-07	3.799	1.900
		0.6330E-07			3.927	1.963
0.557	45860000.		0.5383E-07	0.5312E-07	4.054	2.027
		0.4366E-07			4.134	2.067
0.598	46790000.		0.6459E-07	0.6312E-07	4.214	2.107
		0.8405E-07			4.374	2.187
0.682	47790000.		0.9585E-07	0.9597E-07	4.535	2.267
		0.1078E-06			4.733	2.367
0.789	48780000.		0.1078E-06	0.1078E-06	4.932	2.466
		0.1079E-06			5.131	2.565
0.896	49780000.		0.1181E-06	0.1220E-06	5.329	2.665
		0.1322E-06			5.505	2.752
0.992	50500000.		0.1451E-06	0.1374E-06	5.681	2.840
		0.1502E-06			6.200	3.100
1.262	52300000.		.E+00	.E+00	6.720	3.360
0.398	41220000.		.E+00	.E+00	3.391	1.696
		0.1805E-07			3.426	1.713
0.414	42090000.		0.2523E-07	0.2154E-07	3.461	1.730
		0.2872E-07			3.571	1.785
0.465	43880000.		0.3314E-07	0.3580E-07	3.681	1.840
		0.4122E-07			3.764	1.882

TABLE C-4. (CONTINUED)

BASIC DATA A IN.	N CYCLES	DA/DN CALCULATIONS SIMPLE SLOPE(A)	SIMPLE SLOPE(P)	THREE PT. DIV.DIFF.	DAMAGE PARAMETER KMAX	DELTA K
0.506	44860000.		0.2907E-07	0.2931E-07	3.848	1.924
		0.1715E-07			3.883	1.941
0.523	45860000.		0.2930E-07	0.3022E-07	3.917	1.959
		0.4237E-07			3.996	1.998
0.562	46790000.		0.4927E-07	0.4879E-07	4.074	2.037
		0.5570E-07			4.183	2.091
0.618	47780000.		0.6613E-07	0.6524E-07	4.291	2.145
		0.7667E-07			4.436	2.218
0.694	48780000.		0.8430E-07	0.8422E-07	4.580	2.290
		0.9195E-07			4.751	2.375
0.786	49780000.		0.9922E-07	0.1021E-06	4.921	2.461
		0.1094E-06			5.067	2.533
0.864	50500000.		0.1256E-06	0.1159E-06	5.212	2.606
		0.1320E-06			5.654	2.827
1.102	52300000.		.E+00	.E+00	6.096	3.048

SPECIMEN NO.= AL-6A-3-.5 YIELD STRENGTH= 57.0 THICKNESS= 0.528 WIDTH= 4.000
SPECIMEN TYPE=0.0, MAXIMUM STRESS OR LOAD= 5.500 STRESS RATIO= 0.500

0.322	40000.		.E+00	.E+00	5.617	2.808
		0.2200E-06			5.627	2.813
0.324	50000.		0.3200E-06	0.2700E-06	5.637	2.819
		0.3700E-06			5.671	2.836
0.331	70000.		0.2729E-06	0.3311E-06	5.706	2.853
		0.2760E-06			5.759	2.880
0.343	120000.		0.2140E-06	0.2140E-06	5.813	2.906
		0.1940E-06			5.857	2.928
0.353	170000.		0.3060E-06	0.3060E-06	5.901	2.950
		0.4180E-06			5.994	2.997
0.373	220000.		0.2385E-06	0.2385E-06	6.088	3.044
		0.5900E-07			6.101	3.050
0.376	270000.		0.1303E-06	0.9467E-07	6.114	3.057
		0.1660E-06			6.187	3.093
0.393	370000.		0.1825E-06	0.1825E-06	6.260	3.130
		0.1990E-06			6.346	3.173
0.413	470000.		0.2337E-06	0.2337E-06	6.433	3.216
		0.2585E-06			6.548	3.274
0.440	570000.		0.2585E-06	0.2585E-06	6.663	3.331
		0.2485E-06			6.768	3.384
0.465	670000.		0.2390E-06	0.2390E-06	6.873	3.437
		0.2295E-06			6.970	3.485
0.488	770000.		.E+00	.E+00	7.066	3.533
0.312	40000.		.E+00	.E+00	5.526	2.763
		0.5400E-06			5.551	2.776
0.317	50000.		0.4450E-06	0.4925E-06	5.577	2.788
		0.3975E-06			5.614	2.807
0.325	70000.		0.2279E-06	0.3296E-06	5.651	2.825
		0.1600E-06			5.687	2.844
0.337	120000.		0.1900E-06	0.1900E-06	5.724	2.862
		0.2200E-06			5.775	2.887
0.344	170000.		0.1875E-06	0.1875E-06	5.825	2.912
		0.1500E-06			5.860	2.930
0.352	220000.		0.2310E-06	0.2310E-06	5.895	2.948
		0.3700E-06			5.964	2.982
0.367	270000.		0.2227E-06	0.2648E-06	6.032	3.016
		0.1850E-06			6.113	3.056
0.385	370000.		0.1890E-06	0.1890E-06	6.193	3.096
		0.1975E-06			6.279	3.139
0.405	470000.		0.2065E-06	0.2065E-06	6.365	3.183
		0.2155E-06			6.458	3.229
0.427	570000.		0.2120E-06	0.2120E-06	6.551	3.275
		0.2350E-06			6.638	3.319
0.447	670000.		0.2377E-06	0.2377E-06	6.726	3.363
		0.2750E-06			6.840	3.420
0.474	770000.		.E+00	.E+00	6.954	3.477
0.326	40000.		.E+00	.E+00	5.657	2.828
		0.2900E-06			5.670	2.835
0.329	50000.		0.2267E-06	0.2583E-06	5.683	2.842
		0.1950E-06			5.701	2.851
0.333	70000.		0.2200E-06	0.2050E-06	5.719	2.860
		0.2700E-06			5.772	2.886

TABLE C-4. (CONTINUED)

BASIC DATA		DA/DN CALCULATIONS			DAMAGE PARAMETER	
A IN.	N CYCLES	SIMPLE SLOPE(A)	SIMPLE SLOPE(P)	THREE PT. DIV.DIFF.	KMAX	DELTA K
0.344	120000.		0.2653E-06	0.2653E-06	5.824	2.912
		0.3146E-06			5.892	2.946
0.359	170000.		0.2140E-06	0.2140E-06	5.960	2.980
		0.1270E-06			5.989	2.994
0.366	220000.		0.1990E-06	0.1990E-06	6.017	3.009
		0.2710E-06			6.077	3.039
0.379	270000.		0.2307E-06	0.2508E-06	6.138	3.069
		0.2195E-06			6.230	3.115
0.400	370000.		0.2650E-06	0.2650E-06	6.322	3.161
		0.3195E-06			6.460	3.230
0.432	470000.		0.2105E-06	0.2105E-06	6.598	3.299
		0.1715E-06			6.641	3.320
0.442	570000.		0.1717E-06	0.1717E-06	6.684	3.342
		0.2406E-06			6.787	3.393
0.466	670000.		0.2628E-06	0.2627E-06	6.889	3.444
		0.2835E-06			7.008	3.504
0.495	770000.		.E+00	.E+00	7.127	3.563
0.320	40000.		.E+00	.E+00	5.644	2.822
		0.6750E-06			5.635	2.818
0.327	50000.		0.3267E-06	0.5008E-06	5.667	2.833
		0.1525E-06			5.681	2.840
0.330	70000.		0.2636E-06	0.1969E-06	5.695	2.847
		0.3080E-06			5.765	2.883
0.345	120000.		0.2575E-06	0.2575E-06	5.836	2.918
		0.2070E-06			5.883	2.941
0.356	170000.		0.2140E-06	0.2140E-06	5.929	2.965
		0.2210E-06			5.979	2.989
0.367	220000.		0.2100E-06	0.2100E-06	6.028	3.014
		0.1990E-06			6.073	3.036
0.377	270000.		0.2380E-06	0.2187E-06	6.117	3.058
		0.2580E-06			6.230	3.115
0.403	370000.		0.2440E-06	0.2440E-06	6.343	3.171
		0.2700E-06			6.442	3.221
0.426	470000.		0.2473E-06	0.2472E-06	6.542	3.271
		0.2845E-06			6.654	3.327
0.452	570000.		0.2528E-06	0.2528E-06	6.767	3.383
		0.2410E-06			6.868	3.434
0.476	670000.		0.2620E-06	0.2620E-06	6.970	3.485
		0.2830E-06			7.088	3.544
0.504	770000.		.E+00	.E+00	7.207	3.603

SPECIMEN NO.= AL-68-1-.5 YIELD STRENGTH= 57.00 THICKNESS= 0.528 WIDTH= 4.000
SPECIMEN TYPE=CC, MAXIMUM STRESS OR LOAD= 8.000 STRESS RATIO= 0.500

0.633	820000.		.E+00	.E+00	11.674	5.837
		0.4795E-05			11.939	5.969
0.647	830000.		0.5057E-05	0.5718E-05	12.203	6.102
		0.6780E-05			12.397	6.198
0.679	835000.		0.5945E-05	0.5945E-05	12.591	6.295
		0.5510E-05			12.759	6.380
0.707	840000.		0.6545E-05	0.6545E-05	12.928	6.464
		0.7580E-05			13.162	6.581
0.745	845000.		0.9110E-05	0.9110E-05	13.397	6.698
		0.1064E-04			13.733	6.866
0.798	850000.		.E+00	.E+00	14.069	7.034
0.571	820000.		.E+00	.E+00	11.286	5.643
		0.3830E-05			11.516	5.758
0.609	830000.		0.4217E-05	0.4597E-05	11.746	5.873
		0.4980E-05			11.896	5.948
0.634	835000.		0.4625E-05	0.4625E-05	12.046	6.023
		0.4270E-05			12.175	6.087
0.656	840000.		0.4825E-05	0.4825E-05	12.304	6.152
		0.5780E-05			12.467	6.234
0.683	845000.		0.5605E-05	0.5605E-05	12.631	6.315
		0.6803E-05			12.809	6.405
0.712	850000.		.E+00	.E+00	12.988	6.494
0.589	820000.		.E+00	.E+00	11.502	5.751
		0.3905E-05			11.737	5.869
0.628	830000.		0.4223E-05	0.4542E-05	11.972	5.986
		0.4861E-05			12.119	6.059

TABLE C-4. (CONTINUED)

BASIC DATA		DA/DN CALCULATIONS			DAMAGE PARAMETER	
A IN.	N CYCLES	SIMPLE SLOPE(A)	SIMPLE SLOPE(P)	THREE PT. DIV.DIFF.	KMAX	DELTA K
0.653	835000.		0.5195E-05	0.5195E-05	12.266	6.133
		0.5520E-05			12.434	6.217
0.684	840000.		0.6265E-05	0.6265E-05	12.601	6.301
		0.7030E-05			12.816	6.408
0.715	845000.		0.6905E-05	0.6905E-05	13.030	6.515
		0.6810E-05			13.242	6.621
0.749	850000.		.E+00	.E+00	13.453	6.726
0.609	820000.		.E+00	.E+00	11.740	5.872
		0.4160E-05			11.991	5.996
0.651	830000.		0.3513E-05	0.2867E-05	12.242	6.121
		0.2220E-05			12.309	6.155
0.662	835000.		0.3540E-05	0.3540E-05	12.377	6.188
		0.4860E-05			12.524	6.262
0.686	840000.		0.5490E-05	0.5490E-05	12.672	6.336
		0.6120E-05			12.860	6.430
0.717	845000.		0.6375E-05	0.6375E-05	13.048	6.524
		0.6870E-05			13.253	6.627
0.750	850000.		.E+00	.E+00	13.459	6.730

SPECIMEN NO.= 4L-BC-4-.5 YIELD STRENGTH= 57.00 THICKNESS= 0.525 WIDTH= 4.000
SPECIMEN TYPE=CC, MAXIMUM STRESS OR LOAD= 11.500 STRESS RATIO= 0.500

0.799	851000.		.E+00	.E+00	20.234	10.117
		0.2185E-04			20.437	10.218
0.820	852000.		0.2357E-04	0.2357E-04	20.639	10.320
		0.2530E-04			20.877	10.439
0.846	853000.		0.2820E-04	0.2820E-04	21.115	10.558
		0.3110E-04			21.413	10.707
0.877	854000.		0.2920E-04	0.2920E-04	21.712	10.856
		0.2770E-04			21.979	10.990
0.904	855000.		0.2942E-04	0.2942E-04	22.246	11.123
		0.3155E-04			22.563	11.281
0.936	856000.		0.3415E-04	0.3415E-04	22.880	11.440
		0.3675E-04			23.259	11.630
0.972	857000.		0.3592E-04	0.3592E-04	23.639	11.820
		0.3510E-04			24.015	12.007
1.007	858000.		0.4277E-04	0.4277E-04	24.391	12.195
		0.5145E-04			24.955	12.478
1.059	859000.		0.4768E-04	0.4768E-04	25.520	12.760
		0.4490E-04			26.051	13.025
1.103	860000.		0.5508E-04	0.5508E-04	26.582	13.291
		0.6525E-04			27.416	13.705
1.168	861000.		0.7283E-04	0.8042E-04	28.239	14.119
		0.9800E-04			28.842	14.421
1.212	861500.		0.9800E-04	0.9133E-04	29.446	14.723
		0.1013E-03			31.909	15.955
1.364	863000.		.E+00	.E+00	34.372	17.186
0.722	851000.		.E+00	.E+00	18.846	9.423
		0.1915E-04			19.017	9.509
0.741	852000.		0.1985E-04	0.1985E-04	19.188	9.594
		0.2055E-04			19.373	9.686
0.761	853000.		0.2090E-04	0.2090E-04	19.557	9.779
		0.2125E-04			19.750	9.875
0.783	854000.		0.2045E-04	0.2045E-04	19.943	9.972
		0.1905E-04			20.124	10.062
0.802	855000.		0.1775E-04	0.1775E-04	20.304	10.152
		0.1585E-04			20.451	10.226
0.818	856000.		0.2040E-04	0.2040E-04	20.598	10.299
		0.2495E-04			20.837	10.416
0.843	857000.		0.2518E-04	0.2518E-04	21.067	10.533
		0.2540E-04			21.309	10.655
0.869	858000.		0.2342E-04	0.2342E-04	21.552	10.776
		0.2145E-04			21.760	10.880
0.890	859000.		0.2567E-04	0.2567E-04	21.969	10.984
		0.2990E-04			22.265	11.133
0.920	860000.		0.2503E-04	0.2503E-04	22.561	11.281
		0.2150E-04			22.765	11.383
0.940	861000.		0.2417E-04	0.2818E-04	22.969	11.485
		0.3220E-04			23.135	11.567
0.956	861500.		0.3203E-04	0.3214E-04	23.300	11.650
		0.3197E-04			23.908	11.904

TABLE C-4. (CONTINUED)

BASIC DATA		DA/DN CALCULATIONS			DAMAGE PARAMETER	
A IN.	N CYCLES	SIMPLE SLOPE(A)	SIMPLE SLOPE(P)	THREE PT. DIV.DIFF.	KMAX	DELTA K
1.004	863000.		0.3767E-04	0.3975E-04	24.317	12.158
		0.4545E-04			24.874	12.437
1.054	864100.		.E+00	.E+00	25.432	12.716
0.768	851000.		.E+00	.E+00	19.672	9.836
		0.2140E-04			19.867	9.934
0.789	852000.		0.2095E-04	0.2095E-04	20.062	10.031
		0.2050E-04			20.251	10.126
0.810	853000.		0.2205E-04	0.2265E-04	20.440	10.220
		0.2360E-04			20.661	10.330
0.833	854000.		0.2375E-04	0.2375E-04	20.881	10.440
		0.2390E-04			21.108	10.554
0.857	855000.		0.2335E-04	0.2335E-04	21.334	10.667
		0.2260E-04			21.554	10.777
0.880	856000.		0.2690E-04	0.2690E-04	21.774	10.887
		0.3100E-04			22.079	11.039
0.911	857000.		0.3045E-04	0.3045E-04	22.387	11.192
		0.2990E-04			22.685	11.343
0.941	858000.		0.3133E-04	0.3133E-04	22.987	11.493
		0.3270E-04			23.326	11.663
0.974	859000.		0.3235E-04	0.3230E-04	23.666	11.833
		0.3195E-04			24.006	12.003
1.005	860000.		0.3440E-04	0.3440E-04	24.347	12.174
		0.3695E-04			24.757	12.378
1.042	861000.		0.3907E-04	0.4118E-04	25.168	12.583
		0.4700E-04			25.414	12.707
1.064	862000.		0.5487E-04	0.4714E-04	25.662	12.831
		0.5867E-04			26.740	13.370
1.152	863000.		0.5485E-04	0.5346E-04	27.819	13.909
		0.4904E-04			28.556	14.278
1.207	864000.		.E+00	.E+00	29.293	14.647
0.770	851000.		.E+00	.E+00	19.711	9.856
		0.1910E-04			19.886	9.943
0.789	852000.		0.2148E-04	0.2148E-04	20.060	10.030
		0.2365E-04			20.280	10.140
0.813	853000.		0.2327E-04	0.2327E-04	20.500	10.250
		0.2270E-04			20.712	10.356
0.836	854000.		0.2402E-04	0.2402E-04	20.924	10.462
		0.2535E-04			21.165	10.583
0.861	855000.		0.2752E-04	0.2752E-04	21.406	10.703
		0.2970E-04			21.694	10.847
0.891	856000.		0.3018E-04	0.3007E-04	21.982	10.991
		0.3045E-04			22.263	11.142
0.921	857000.		0.3063E-04	0.3063E-04	22.568	11.293
		0.2960E-04			22.867	11.443
0.951	858000.		0.2962E-04	0.2962E-04	23.166	11.594
		0.2845E-04			23.465	11.742
0.979	859000.		0.3290E-04	0.3290E-04	23.762	11.891
		0.3735E-04			24.185	12.092
1.016	860000.		0.4465E-04	0.4465E-04	24.588	12.294
		0.5235E-04			25.180	12.590
1.069	861000.		0.4780E-04	0.4325E-04	25.773	12.886
		0.3870E-04			26.001	13.000
1.088	861500.		0.5215E-04	0.4318E-04	26.229	13.115
		0.5663E-04			27.301	13.651
1.173	863000.		0.5465E-04	0.5939E-04	28.373	14.187
		0.6141E-04			29.324	14.662
1.241	864100.		.E+00	.E+00	30.276	15.138

TABLE C-5. FATIGUE-CRACK-PROPAGATION DATA FOR 7475-T7351 AT R = 0.250

SPECIMEN NO.= AL-4-1-.25 YIELD STRENGTH= 57.00 THICKNESS= 0.530 WIDTH= 6.000
SPECIMEN TYPE=CC, MAXIMUM STRESS OR LOAD= 2.390 STRESS RATIO= 0.250

BASIC DATA A IN.	N CYCLES	DA/DN CALCULATIONS SIMPLE SLOPE(A)	SIMPLE SLOPE(P)	THREE PT. DIV.DIFF.	DAMAGE PARAMETER KMAX	DELTA K
0.556	4910000.		.E+00	.E+00	3.226	2.420
		0.1328E-06			3.342	2.506
0.630	5471000.		0.1387E-06	0.1361E-06	3.457	2.593
		0.1419E-06			3.669	2.752
0.772	6471000.		0.1600E-06	0.1500E-06	3.882	2.911
		0.1780E-06			4.143	3.107
0.950	7471000.		0.2204E-06	0.2204E-06	4.404	3.303
		0.2627E-06			4.801	3.601
1.213	8471000.		0.3466E-06	0.3466E-06	5.198	3.899
		0.4305E-06			5.960	4.470
1.644	9471000.		.E+00	.E+00	6.722	5.042
0.562	4910000.		.E+00	.E+00	3.246	2.435
		0.3360E-07			3.276	2.457
0.581	5471000.		0.3209E-07	0.3276E-07	3.305	2.479
		0.3125E-07			3.354	2.515
0.612	6471000.		0.3400E-07	0.3400E-07	3.402	2.551
		0.3675E-07			3.458	2.594
0.649	7471000.		0.2615E-07	0.2615E-07	3.514	2.636
		0.1555E-07			3.538	2.653
0.665	8471000.		0.1998E-07	0.1998E-07	3.561	2.671
		0.2440E-07			3.598	2.698
0.689	9471000.		.E+00	.E+00	3.634	2.726
0.627	4910000.		.E+00	.E+00	3.448	2.586
		0.6952E-07			3.507	2.630
0.666	5471000.		0.5852E-07	0.6335E-07	3.566	2.675
		0.5235E-07			3.645	2.733
0.719	6471000.		0.6255E-07	0.6255E-07	3.723	2.792
		0.7275E-07			3.830	2.873
0.791	7471000.		0.5040E-07	0.5040E-07	3.938	2.953
		0.2805E-07			3.979	2.984
0.820	8471000.		0.3693E-07	0.3692E-07	4.020	3.015
		0.4580E-07			4.087	3.066
0.865	9471000.		.E+00	.E+00	4.155	3.116
0.493	4910000.		.E+00	.E+00	3.026	2.269
		0.1604E-08			3.027	2.270
0.494	5471000.		0.1185E-08	0.1369E-08	3.029	2.272
		0.9500E-09			3.030	2.273
0.495	6471000.		0.9000E-09	0.9000E-09	3.032	2.274
		0.8500E-09			3.033	2.275
0.496	7471000.		0.3213E-07	0.1649E-07	3.035	2.276
		0.4777E-07			3.186	2.390
0.592	9471000.		.E+00	.E+00	3.338	2.504

SPECIMEN NO.= AL-2-1-.25 YIELD STRENGTH= 57.00 THICKNESS= 0.520 WIDTH= 6.000
SPECIMEN TYPE=CC, MAXIMUM STRESS OR LOAD= 2.500 STRESS RATIO= 0.250

0.483	1908000.		.E+00	.E+00	3.130	2.347
		0.7120E-07			3.250	2.437
0.554	2908000.		0.3872E-07	0.3872E-07	3.370	2.527
		0.6250E-08			3.380	2.535
0.561	3908000.		0.2802E-07	0.2802E-07	3.390	2.543
		0.4980E-07			3.471	2.604
0.610	4908000.		0.4765E-07	0.4765E-07	3.552	2.664
		0.4550E-07			3.625	2.719
0.656	5908000.		0.5375E-07	0.5375E-07	3.698	2.773
		0.6200E-07			3.795	2.846
0.718	6908000.		0.7277E-07	0.7277E-07	3.892	2.919
		0.8355E-07			4.021	3.016
0.802	7908000.		0.8387E-07	0.8479E-07	4.150	3.113
		0.8511E-07			4.184	3.138
0.824	8170000.		.E+00	.E+00	4.219	3.164
0.461	1908000.		.E+00	.E+00	3.051	2.288
		0.8740E-07			3.200	2.400
0.548	2908000.		0.8520E-07	0.8520E-07	3.348	2.511
		0.8300E-07			3.483	2.612

TABLE C-5. (CONTINUED)

BASIC DATA A IN.	N CYCLES	DA/DN CALCULATIONS SIMPLE SLOPE(A)	SIMPLE SLOPE(P)	THREE PT. DIV.DIFF.	DAMAGE PARAMETER KMAX	DELTA K
0.631	3908000.		0.7788E-07	0.7788E-07	3.618	2.714
		0.7275E-07			3.733	2.800
0.704	4908000.		0.8512E-07	0.8512E-07	3.848	2.886
		0.9750E-07			3.998	2.999
0.801	5908000.		0.1080E-06	0.1080E-06	4.149	3.112
		0.1185E-06			4.331	3.248
0.920	6908000.		0.1388E-06	0.1388E-06	4.513	3.384
		0.1591E-06			4.739	3.570
1.079	7908000.		0.1672E-06	0.1899E-06	5.006	3.755
		0.1979E-06			5.089	3.816
1.131	8170000.		.E+00	.E+00	5.171	3.878
0.467	1908000.		.E+00	.E+00	3.072	2.304
		0.7290E-07			3.197	2.397
0.540	2908000.		0.8065E-07	0.8065E-07	3.321	2.491
		0.8840E-07			3.465	2.599
0.628	3908000.		0.8262E-07	0.8262E-07	3.609	2.707
		0.7685E-07			3.730	2.797
0.705	4908000.		0.9097E-07	0.9097E-07	3.851	2.888
		0.1051E-06			4.014	3.010
0.810	5908000.		0.1207E-06	0.1207E-06	4.176	3.132
		0.1362E-06			4.395	3.289
0.946	6908000.		0.1539E-06	0.1539E-06	4.594	3.445
		0.1716E-06			4.852	3.645
1.118	7908000.		0.1794E-06	0.2014E-06	5.130	3.847
		0.2092E-06			5.218	3.913
1.173	8170000.		.E+00	.E+00	5.306	3.979
0.460	1908000.		.E+00	.E+00	3.049	2.286
		0.1680E-06			3.328	2.495
0.628	2908000.		0.1424E-06	0.1424E-06	3.608	2.706
		0.1168E-06			3.792	2.844
0.745	3908000.		0.1226E-06	0.1225E-06	3.975	2.981
		0.1283E-06			4.172	3.129
0.873	4908000.		0.1542E-06	0.1542E-06	4.369	3.277
		0.1801E-06			4.647	3.485
1.053	5908000.		0.1972E-06	0.1972E-06	4.925	3.694
		0.2142E-06			5.272	3.954
1.267	6908000.		0.3157E-06	0.3157E-06	5.618	4.214
		0.4171E-06			6.414	4.810
1.694	7908000.		.E+00	.E+00	7.210	5.407

SPECIMEN NO.= AL-7A-1-.2 YIELD STRENGTH= 57.00 THICKNESS= 0.523 WIDTH= 4.000
SPECIMEN TYPE=CC. MAXIMUM STRESS OR LOAD= 6.000 STRESS RATIO= 0.250

0.329	30000.		.E+00	.E+00	6.267	4.655
		0.7480E-06			6.392	4.794
0.367	80000.		0.7850E-06	0.8405E-06	6.577	4.933
		0.8775E-06			6.662	4.998
0.384	100000.		0.7888E-06	0.7888E-06	6.747	5.060
		0.7000E-06			6.813	5.110
0.398	120000.		0.6675E-06	0.6675E-06	6.880	5.160
		0.6350E-06			6.940	5.205
0.411	140000.		0.7187E-06	0.7187E-06	7.000	5.250
		0.8025E-06			7.076	5.307
0.427	160000.		0.8913E-06	0.8913E-06	7.151	5.363
		0.9600E-06			7.242	5.432
0.447	180000.		0.9350E-06	0.9350E-06	7.334	5.500
		0.8900E-06			7.416	5.562
0.465	200000.		0.9625E-06	0.9625E-06	7.498	5.623
		0.1035E-05			7.593	5.694
0.485	220000.		0.1067E-05	0.1067E-05	7.687	5.765
		0.9800E-06			7.777	5.832
0.505	240000.		0.1099E-05	0.1099E-05	7.866	5.899
		0.1218E-05			7.976	5.982
0.529	260000.		0.1165E-05	0.1165E-05	8.086	6.065
		0.1112E-05			8.187	6.142
0.552	280000.		0.1047E-05	0.1047E-05	8.287	6.215
		0.9625E-06			8.376	6.282
0.571	300000.		.E+00	.E+00	8.464	6.348

TABLE C-5. (CONTINUED)

BASIC DATA		DA/DN CALCULATIONS			DAMAGE PARAMETER	
A IN.	N CYCLES	SIMPLE SLOPE (A)	SIMPLE SLOPE (B)	THREE PT. DIV.DIFF.	KMAX	DELTA K
0.322	30000.		.E+00	.E+00	6.136	4.602
		0.1056E-05			6.397	4.798
0.375	80000.		0.1013E-05	0.9451E-06	6.658	4.994
		0.9050E-06			6.745	5.059
0.393	100000.		0.9500E-06	0.9500E-06	6.832	5.124
		0.9950E-06			6.920	5.190
0.413	120000.		0.9486E-06	0.9468E-06	7.021	5.266
		0.9025E-06			7.109	5.329
0.431	140000.		0.9100E-06	0.9100E-06	7.196	5.392
		0.9175E-06			7.275	5.456
0.450	160000.		0.8212E-06	0.8212E-06	7.356	5.520
		0.7250E-06			7.427	5.570
0.464	180000.		0.1065E-05	0.1065E-05	7.494	5.621
		0.1465E-05			7.623	5.717
0.492	200000.		0.1186E-05	0.1186E-05	7.751	5.813
		0.9675E-06			7.839	5.879
0.512	220000.		0.1215E-05	0.1215E-05	7.927	5.945
		0.1463E-05			8.059	6.044
0.541	240000.		0.1525E-05	0.1525E-05	8.192	6.144
		0.1507E-05			8.335	6.251
0.573	260000.		0.1762E-05	0.1762E-05	8.478	6.358
		0.1938E-05			8.652	6.489
0.611	280000.		0.1910E-05	0.1910E-05	8.827	6.620
		0.1862E-05			8.997	6.748
0.649	300000.		.E+00	.E+00	9.168	6.876
0.332	30000.		.E+00	.E+00	6.236	4.677
		0.1164E-05			6.506	4.879
0.388	80000.		0.1136E-05	0.1163E-05	6.776	5.082
		0.1215E-05			6.962	5.169
0.412	100000.		0.1151E-05	0.1151E-05	7.147	5.255
		0.1088E-05			7.109	5.332
0.434	120000.		0.7986E-06	0.7987E-06	7.211	5.408
		0.5100E-06			7.255	5.444
0.444	140000.		0.8650E-06	0.8650E-06	7.366	5.479
		0.1220E-05			7.426	5.564
0.468	160000.		0.1169E-05	0.1169E-05	7.531	5.645
		0.1118E-05			7.633	5.725
0.491	180000.		0.1110E-05	0.1110E-05	7.735	5.801
		0.1122E-05			7.835	5.877
0.513	200000.		0.1340E-05	0.1340E-05	7.936	5.952
		0.1577E-05			8.079	6.059
0.544	220000.		0.1624E-05	0.1624E-05	8.221	6.166
		0.1670E-05			8.372	6.279
0.578	240000.		0.1756E-05	0.1756E-05	8.522	6.391
		0.1843E-05			8.688	6.516
0.614	260000.		0.2346E-05	0.2346E-05	9.054	6.791
		0.2852E-05			9.112	6.834
0.671	280000.		0.3466E-05	0.3466E-05	9.371	7.028
		0.4063E-05			9.748	7.311
0.753	300000.		.E+00	.E+00	10.125	7.594
0.326	30000.		.E+00	.E+00	6.170	4.628
		0.7550E-06			6.358	4.768
0.364	80000.		0.9629E-06	0.1125E-05	6.545	4.909
		0.1272E-05			6.668	5.001
0.389	100000.		0.9750E-06	0.9750E-06	6.791	5.093
		0.8775E-06			6.855	5.141
0.403	120000.		0.8725E-06	0.8725E-06	6.920	5.190
		0.1067E-05			7.020	5.265
0.424	140000.		0.1161E-05	0.1161E-05	7.121	5.341
		0.1135E-05			7.226	5.420
0.447	160000.		0.1198E-05	0.1197E-05	7.332	5.499
		0.1260E-05			7.448	5.586
0.472	180000.		0.1277E-05	0.1277E-05	7.564	5.673
		0.1295E-05			7.683	5.762
0.498	200000.		0.1226E-05	0.1226E-05	7.801	5.851
		0.1156E-05			7.906	5.929
0.521	220000.		0.1281E-05	0.1281E-05	8.011	6.008
		0.1405E-05			8.138	6.103
0.549	240000.		0.1317E-05	0.1317E-05	8.265	6.198
		0.1230E-05			8.375	6.282

TABLE C-5. (CONTINUED)

BASIC DATA		DA/DN CALCULATIONS			DAMAGE PARAMETER	
A IN.	N CYCLES	SIMPLE SLOPE (A)	SIMPLE SLOPE (P)	THREE PT. DIV.DIFF.	KMAX	DELTA K
0.574	280000.		0.1324E-05	0.1324E-05	5.488	5.365
		0.1417E-05			5.614	5.461
0.602	280000.		0.1846E-05	0.1846E-05	5.742	5.556
		0.2275E-05			5.947	5.711
0.647	300000.		.E+00	.E+00	9.153	6.665

SPECIMEN NO.= AL-7-1B-.2 YIELD STRENGTH= 57.00 THICKNESS= 0.528 WIDTH= 4.000
SPECIMEN TYPE=CC. MAXIMUM STRESS OR LOAD= 8.000 STRESS RATIO= 0.250

0.571	300000.		.E+00	.E+00	11.288	8.464
		0.9032E-05			12.385	9.269
0.752	320000.		0.9994E-05	0.1452E-04	13.485	10.114
		0.1549E-04			13.629	10.371
0.606	323500.		.E+00	.E+00	14.172	10.629
0.649	300000.		.E+00	.E+00	12.223	9.168
		0.1564E-04			14.258	10.693
0.962	320000.		0.1911E-04	0.3548E-04	16.292	12.219
		0.3896E-04			17.353	13.015
1.098	323500.		.E+00	.E+00	18.414	13.811
0.753	299900.		.E+00	.E+00	13.500	10.125
		.E+00			13.500	10.125
0.753	300000.		0.2424E-04	0.1212E-06	13.500	10.125
		0.2436E-04			17.276	12.957
1.240	320000.		.E+00	.E+00	21.052	15.789
0.647	300000.		.E+00	.E+00	12.204	9.153
		0.1298E-04			13.806	10.354
0.899	320000.		0.1454E-04	0.2376E-04	15.407	11.555
		0.2571E-04			16.049	12.037
0.989	323500.		.E+00	.E+00	16.691	12.518

TABLE C-6. FATIGUE-CRACK-PROPAGATION DATA FOR 7475-T7351 AT R = 0.100

SPECIMEN NO.= AL-1-1-.1 YIELD STRENGTH= 57.00 THICKNESS= 0.520 WIDTH= 6.000
SPECIMEN TYPE=CC, MAXIMUM STRESS OR LOAD= 3.000 STRESS RATIO= 0.100

BASIC DATA		DA/DN CALCULATIONS			DAMAGE PARAMETER	
A IN.	N CYCLES	SIMPLE SLOPE(A)	SIMPLE SLOPE(P)	THREE PT. DIV.DIFF.	KMAX	DELTA K
0.517	1500000.		.E+00	.E+00	3.896	3.506
		0.1255E-06			4.021	3.619
0.580	2000000.		0.1398E-06	0.1398E-06	4.145	3.731
		0.1541E-06			4.294	3.864
0.657	2500000.		0.1609E-06	0.1609E-06	4.442	3.998
		0.1677E-06			4.599	4.139
0.741	3000000.		0.1967E-06	0.1963E-06	4.757	4.281
		0.2253E-06			4.957	4.470
0.855	3506000.		0.2191E-06	0.2163E-06	5.177	4.660
		0.2101E-06			5.313	4.782
0.929	3856000.		0.2214E-06	0.2180E-06	5.448	4.903
		0.2293E-06			5.661	5.095
1.043	4356000.		0.2973E-06	0.2973E-06	5.874	5.286
		0.3653E-06			6.225	5.603
1.226	4856000.		0.4222E-06	0.4863E-06	6.576	5.919
		0.5432E-06			6.837	6.153
1.354	5091000.		0.7514E-06	0.8589E-06	7.097	6.388
		0.1067E-05			7.463	6.717
1.519	5246000.		.E+00	.E+00	7.829	7.046
0.504	1500000.		.E+00	.E+00	3.842	3.458
		0.1393E-06			3.981	3.583
0.574	2000000.		0.1488E-06	0.1488E-06	4.120	3.708
		0.1584E-06			4.273	3.846
0.653	2500000.		0.1652E-06	0.1652E-06	4.426	3.983
		0.1720E-06			4.588	4.129
0.739	3000000.		0.1743E-06	0.1743E-06	4.749	4.274
		0.1766E-06			4.914	4.423
0.828	3506000.		0.1851E-06	0.1889E-06	5.079	4.571
		0.1974E-06			5.206	4.686
0.898	3856000.		0.2185E-06	0.2122E-06	5.333	4.800
		0.2332E-06			5.549	4.994
1.014	4356000.		0.2511E-06	0.2511E-06	5.765	5.188
		0.2690E-06			6.019	5.417
1.149	4856000.		0.3246E-06	0.3872E-06	6.274	5.645
		0.4428E-06			6.478	5.830
1.253	5091000.		0.5150E-06	0.5523E-06	6.683	6.014
		0.6245E-06			6.881	6.193
1.349	5246000.		.E+00	.E+00	7.080	6.372
0.522	1500000.		.E+00	.E+00	3.915	3.523
		0.1415E-06			4.055	3.649
0.593	2000000.		0.1429E-06	0.1429E-06	4.195	3.775
		0.1443E-06			4.333	3.900
0.665	2500000.		0.1644E-06	0.1644E-06	4.472	4.024
		0.1845E-06			4.644	4.180
0.757	3000000.		0.1933E-06	0.1932E-06	4.817	4.335
		0.2021E-06			5.005	4.505
0.860	3506000.		0.2128E-06	0.2176E-06	5.194	4.674
		0.2283E-06			5.341	4.807
0.939	3856000.		0.2474E-06	0.2417E-06	5.488	4.939
		0.2608E-06			5.731	5.158
1.070	4356000.		0.3558E-06	0.3558E-06	5.974	5.376
		0.4508E-06			6.414	5.773
1.295	4856000.		0.5641E-06	0.6918E-06	6.855	6.170
		0.8051E-06			7.263	6.536
1.484	5091000.		.E+00	.E+00	7.670	6.903
0.523	1500000.		.E+00	.E+00	3.917	3.526
		0.1376E-06			4.054	3.648
0.592	2000000.		0.1377E-06	0.1376E-06	4.190	3.771
		0.1377E-06			4.322	3.890
0.660	2500000.		0.1623E-06	0.1622E-06	4.454	4.009
		0.1868E-06			4.629	4.166
0.754	3000000.		0.1937E-06	0.1937E-06	4.804	4.324
		0.2006E-06			4.931	4.492
0.855	3506000.		0.1979E-06	0.1967E-06	5.178	4.661
		0.1940E-06			5.303	4.773
0.923	3856000.		0.2033E-06	0.2005E-06	5.428	4.885
		0.2098E-06			5.623	5.060

TABLE C-6. (CONTINUED)

BASIC DATA A IN.	N CYCLES	DA/DN CALCULATIONS SIMPLE SLOPE(A)	SIMPLE SLOPE(P)	THREE PT. DIV.DIFF.	DAMAGE PARAMETER KMAX	DELTA K
1.028	4356000.		0.2426E-06	0.2426E-06	5.817	5.235
		0.2754E-06			6.079	5.471
1.166	4856000.		0.2976E-06	0.3227E-06	6.341	5.706
		0.3449E-06			6.500	5.850
1.247	5091000.		0.3712E-06	0.3847E-06	6.660	5.994
		0.4110E-06			6.789	6.110
1.311	5246000.		.E+00	.E+00	6.918	6.227

SPECIMEN NO.= AL-6A-1-.1 YIELD STRENGTH= 57.00 THICKNESS= 0.500 WIDTH= 4.000
SPECIMEN TYPE=CC, MAXIMUM STRESS OF LOAD= 5.500 STRESS RATIO= 0.100

0.318	50000.		.E+00	.E+00	5.584	5.026
		0.1250E-06			5.590	5.031
0.319	60000.		0.2200E-06	0.2200E-06	5.596	5.036
		0.7150E-06			5.610	5.049
0.322	70000.		0.4625E-06	0.4625E-06	5.625	5.063
		0.6100E-06			5.653	5.088
0.329	80000.		0.3750E-06	0.3750E-06	5.682	5.113
		0.1400E-06			5.688	5.119
0.330	90000.		0.3450E-06	0.3450E-06	5.694	5.125
		0.5500E-06			5.720	5.148
0.335	100000.		0.4275E-06	0.4275E-06	5.745	5.171
		0.3100E-06			5.759	5.183
0.339	110000.		0.5650E-06	0.5650E-06	5.773	5.196
		0.8200E-06			5.811	5.229
0.347	120000.		0.5775E-06	0.5775E-06	5.848	5.263
		0.3700E-06			5.863	5.277
0.350	130000.		0.4800E-06	0.4800E-06	5.878	5.290
		0.6300E-06			5.906	5.316
0.356	140000.		0.3450E-06	0.3450E-06	5.935	5.341
		0.8100E-07			5.938	5.344
0.357	150000.		0.2975E-06	0.2975E-06	5.940	5.346
		0.5350E-06			5.964	5.368
0.362	160000.		0.5767E-06	0.5558E-06	5.988	5.389
		0.5975E-06			6.041	5.437
0.374	180000.		0.5475E-06	0.5475E-06	6.095	5.485
		0.4975E-06			6.179	5.525
0.384	200000.		0.5825E-06	0.5825E-06	6.183	5.564
		0.6675E-06			6.241	5.617
0.398	220000.		0.6137E-06	0.6137E-06	6.299	5.670
		0.5800E-06			6.346	5.713
0.409	240000.		0.5425E-06	0.5425E-06	6.397	5.757
		0.5250E-06			6.442	5.798
0.419	260000.		0.4267E-06	0.4263E-06	6.487	5.839
		0.7275E-06			6.518	5.864
0.426	280000.		0.4090E-06	0.3818E-06	6.544	5.889
		0.4075E-06			6.603	5.943
0.442	300000.		0.5787E-06	0.5783E-06	6.662	5.996
		0.6975E-06			6.751	6.076
0.461	320000.		.E+00	.E+00	6.839	6.155
0.318	50000.		.E+00	.E+00	5.578	5.021
		0.9700E-06			5.622	5.060
0.327	60000.		0.7975E-06	0.7975E-06	5.665	5.098
		0.6650E-06			5.698	5.126
0.333	70000.		0.3725E-06	0.3725E-06	5.726	5.154
		0.8000E-07			5.730	5.157
0.334	80000.		0.1550E-06	0.1550E-06	5.734	5.160
		0.2700E-06			5.744	5.170
0.337	90000.		0.4950E-06	0.4950E-06	5.755	5.179
		0.7600E-06			5.789	5.210
0.344	100000.		0.7300E-06	0.7300E-06	5.824	5.242
		0.7100E-06			5.856	5.270
0.351	110000.		0.7050E-06	0.7050E-06	5.887	5.299
		0.7100E-06			5.919	5.328
0.358	120000.		0.8325E-06	0.8325E-06	5.951	5.356
		0.9550E-06			5.994	5.395
0.368	130000.		0.7425E-06	0.7425E-06	6.037	5.433
		0.6700E-06			6.060	5.454
0.373	140000.		0.4050E-06	0.4050E-06	6.084	5.476
		0.2600E-06			6.096	5.487
0.376	150000.		0.4057E-06	0.4050E-06	6.109	5.498
		0.5300E-06			6.132	5.519

TABLE C-6. (CONTINUED)

BASIC DATA		DA/DN CALCULATIONS			DAMAGE PARAMETER	
A IN.	N CYCLES	SIMPLE SLOPE(A)	SIMPLE SLOPE(B)	THREE PT. DIV.DIFF.	KMAX	DELTA K
0.381	160000.		0.5267E-06	0.5283E-06	6.156	5.540
		0.5950E-06			6.222	5.582
0.392	180000.		0.5325E-06	0.5325E-06	6.248	5.623
		0.5400E-06			6.295	5.666
0.402	200000.		0.5400E-06	0.5400E-06	6.342	5.709
		0.5400E-06			6.389	5.750
0.413	220000.		0.6238E-06	0.6238E-06	6.436	5.792
		0.7775E-06			6.497	5.847
0.427	240000.		0.7900E-06	0.7900E-06	6.557	5.902
		0.8725E-06			6.632	5.969
0.445	260000.		0.7200E-06	0.7200E-06	6.776	6.036
		0.6675E-06			6.754	6.079
0.456	280000.		0.3810E-06	0.4212E-06	6.802	6.122
		0.2375E-06			6.828	6.145
0.462	300000.		0.7640E-06	0.7640E-06	6.854	6.168
		0.1725E-06			7.020	6.318
0.502	340000.		.E+00	.E+00	7.187	6.488
0.320	50000.		.E+00	.E+00	5.599	5.039
		0.2000E-07			5.598	5.038
0.319	60000.		0.4775E-06	0.4775E-06	5.597	5.037
		0.9750E-06			5.642	5.078
0.329	70000.		0.5000E-06	0.5000E-06	5.687	5.118
		0.2500E-07			5.688	5.119
0.329	80000.		0.3700E-06	0.3700E-06	5.689	5.120
		0.7150E-06			5.722	5.150
0.337	90000.		0.4975E-06	0.4975E-06	5.755	5.180
		0.2900E-06			5.768	5.191
0.339	100000.		0.1127E-05	0.1127E-05	5.781	5.203
		0.1975E-05			5.870	5.283
0.359	110000.		0.1248E-05	0.1248E-05	5.960	5.364
		0.5200E-06			5.983	5.385
0.364	120000.		0.6750E-06	0.6750E-06	6.006	5.405
		0.8700E-06			6.043	5.439
0.373	130000.		0.5400E-06	0.5400E-06	6.080	5.472
		0.2500E-06			6.091	5.482
0.375	140000.		0.5300E-06	0.5300E-06	6.102	5.492
		0.9000E-06			6.138	5.524
0.383	150000.		0.5450E-06	0.5450E-06	6.174	5.556
		0.2800E-06			6.186	5.567
0.386	160000.		0.6287E-06	0.4542E-06	6.198	5.579
		0.8125E-06			6.269	5.642
0.402	180000.		0.6625E-06	0.6625E-06	6.339	5.705
		0.4005E-06			6.374	5.736
0.410	200000.		0.2812E-06	0.2812E-06	6.408	5.768
		0.1600E-06			6.422	5.780
0.413	220000.		0.5317E-06	0.5317E-06	6.436	5.793
		0.9125E-06			6.514	5.862
0.431	240000.		0.7350E-06	0.7350E-06	6.591	5.932
		0.6750E-06			6.634	5.971
0.442	260000.		0.5313E-06	0.5313E-06	6.678	6.010
		0.5550E-06			6.725	6.052
0.453	280000.		0.6090E-06	0.5910E-06	6.772	6.095
		0.6450E-06			6.854	6.168
0.472	300000.		0.7254E-06	0.7258E-06	6.935	6.242
		0.8175E-06			7.036	6.333
0.496	320000.		.E+00	.E+00	7.138	6.424
0.315	50000.		.E+00	.E+00	5.557	5.002
		0.2100E-06			5.567	5.011
0.317	60000.		0.4800E-06	0.4800E-06	5.577	5.019
		0.7500E-06			5.612	5.051
0.325	70000.		0.5000E-06	0.5000E-06	5.647	5.082
		0.2500E-06			5.658	5.093
0.327	80000.		0.1575E-06	0.1575E-06	5.670	5.103
		0.8500E-07			5.673	5.106
0.328	90000.		0.5300E-06	0.5300E-06	5.676	5.108
		0.9900E-06			5.722	5.150
0.338	100000.		0.1043E-05	0.1043E-05	5.767	5.191
		0.1700E-05			5.817	5.235
0.343	110000.		0.8250E-06	0.8250E-06	5.867	5.280
		0.5600E-06			5.892	5.303

TABLE C-6. (CONTINUED)

BASIC DATA		DA/DN CALCULATIONS			DAMAGE PARAMETER	
A IN.	N CYCLES	SIMPLE SLOPE(A)	SIMPLE SLOPE(B)	THREE PT. DIV.DIFF.	KMAX	DELTA K
0.354	120000.		0.9250E-06	0.9250E-06	5.917	5.326
		0.1290E-05			5.975	5.378
0.367	130000.		0.8250E-06	0.8250E-06	6.033	5.430
		0.7600E-06			6.049	5.444
0.371	140000.		0.5875E-06	0.5875E-06	6.065	5.458
		0.8150E-06			6.101	5.491
0.379	150000.		0.4825E-06	0.4825E-06	6.137	5.523
		0.1570E-06			6.144	5.529
0.381	160000.		0.5950E-06	0.3725E-06	6.150	5.535
		0.8175E-06			6.222	5.600
0.397	180000.		0.6575E-06	0.6575E-06	6.294	5.664
		0.4975E-06			6.337	5.703
0.407	200000.		0.5000E-06	0.5000E-06	6.380	5.742
		0.5125E-06			6.424	5.781
0.417	220000.		0.4625E-06	0.4625E-06	6.467	5.820
		0.4225E-06			6.503	5.853
0.425	240000.		0.5400E-06	0.5400E-06	6.540	5.886
		0.6575E-06			6.596	5.936
0.439	260000.		0.5638E-06	0.5638E-06	6.652	5.987
		0.4700E-06			6.692	6.023
0.448	280000.		0.3900E-06	0.4167E-06	6.732	6.059
		0.3767E-06			6.775	6.097
0.458	310000.		0.5425E-06	0.5425E-06	6.818	6.136
		0.7483E-06			6.912	6.221
0.480	340000.		.E+00	.E+00	7.007	6.306

SPECIMEN NO.= AL-5B-1-.1 YIELD STRENGTH= 57.00 THICKNESS= 0.500 WIDTH= 4.000
SPECIMEN TYPE=CC, MAXIMUM STRESS OR LOAD= 7.500 STRESS RATIO= 0.100

0.510	350000.		.E+00	.E+00	9.888	8.900
		0.7550E-05			10.314	9.283
0.585	360000.		0.8052E-05	0.9558E-05	10.740	9.666
		0.1006E-04			10.882	9.794
0.610	362500.		0.1057E-04	0.1057E-04	11.024	9.921
		0.1108E-04			11.180	10.062
0.638	365000.		0.1125E-04	0.1125E-04	11.336	10.203
		0.1142E-04			11.498	10.349
0.667	367500.		0.1148E-04	0.1148E-04	11.661	10.494
		0.1154E-04			11.825	10.643
0.696	370000.		0.1316E-04	0.1347E-04	11.990	10.791
		0.1495E-04			12.163	10.946
0.726	372000.		0.1669E-04	0.1669E-04	12.335	11.102
		0.1843E-04			12.551	11.296
0.762	374000.		0.1671E-04	0.1614E-04	12.766	11.489
		0.1443E-04			12.894	11.605
0.784	375500.		0.1612E-04	0.1612E-04	13.023	11.720
		0.1780E-04			13.183	11.865
0.811	377000.		0.2018E-04	0.2137E-04	13.343	12.009
		0.2375E-04			13.488	12.139
0.834	378000.		0.2406E-04	0.2400E-04	13.633	12.269
		0.2453E-04			13.783	12.405
0.859	379000.		0.2642E-04	0.2642E-04	13.933	12.540
		0.2860E-04			14.113	12.702
0.887	380000.		0.2712E-04	0.2712E-04	14.294	12.864
		0.2565E-04			14.459	13.013
0.913	381000.		0.2700E-04	0.2700E-04	14.624	13.162
		0.2835E-04			14.811	13.330
0.941	382000.		0.3036E-04	0.3035E-04	14.997	13.497
		0.3275E-04			15.216	13.694
0.974	383000.		0.3350E-04	0.3465E-04	15.435	13.891
		0.3540E-04			15.559	14.007
0.992	383500.		0.3650E-04	0.3650E-04	15.683	14.115
		0.3720E-04			15.814	14.233
1.011	384000.		0.3715E-04	0.3715E-04	15.945	14.351
		0.3710E-04			16.079	14.471
1.029	384500.		0.3770E-04	0.3770E-04	16.212	14.591
		0.3850E-04			16.353	14.718
1.048	385000.		0.3935E-04	0.3936E-04	16.493	14.844
		0.4030E-04			16.645	14.980
1.068	385500.		0.3925E-04	0.3905E-04	16.796	15.116
		0.3470E-04			16.822	15.140
1.071	385600.		0.3125E-04	0.3125E-04	16.848	15.163
		0.2850E-04			16.870	15.183

TABLE C-6. (CONTINUED)

BASIC DATA		DA/DN CALCULATIONS			DAMAGE PARAMETER	
A IN.	N CYCLES	SIMPLE SLOPE(A)	SIMPLE SLOPE(P)	THREE PT. DIV.DIFF.	KMAX	DELTA K
1.074	385700.		0.3505E-04	0.3850E-04	16.891	15.202
		0.4800E-04			16.929	15.236
1.078	386800.		0.4495E-04	0.4450E-04	16.966	15.269
		0.4700E-04			16.997	15.297
1.087	386900.		0.4725E-04	0.4725E-04	17.028	15.325
		0.4800E-04			17.070	15.363
1.089	386000.		0.5217E-04	0.5363E-04	17.112	15.401
		0.5190E-04			17.317	15.585
1.114	386500.		0.5267E-04	0.5613E-04	17.522	15.770
		0.5700E-04			17.568	15.811
1.120	386600.		0.6200E-04	0.5950E-04	17.614	15.853
		0.6450E-04			17.720	15.948
1.133	386800.		0.6087E-04	0.6087E-04	17.825	16.043
		0.5725E-04			17.920	16.128
1.145	387000.		0.5439E-04	0.5438E-04	18.016	16.214
		0.5100E-04			18.102	16.292
1.155	387200.		0.5300E-04	0.5300E-04	18.189	16.370
		0.5400E-04			18.283	16.454
1.166	387400.		0.5162E-04	0.5162E-04	18.376	16.538
		0.4870E-04			18.461	16.615
1.175	387600.		0.5662E-04	0.5662E-04	18.545	16.691
		0.6450E-04			18.659	16.793
1.188	387800.		0.6225E-04	0.6225E-04	18.773	16.896
		0.6100E-04			18.881	16.993
1.200	388000.		0.5550E-04	0.5550E-04	18.980	17.090
		0.5100E-04			19.083	17.174
1.211	388200.		0.6025E-04	0.6625E-04	19.176	17.258
		0.6950E-04			19.306	17.375
1.224	388400.		0.7650E-04	0.8350E-04	19.435	17.492
		0.9100E-04			19.521	17.569
1.233	388500.		.E+00	.E+00	19.607	17.647
0.547	350000.		.E+00	.E+00	10.313	9.282
		0.7485E-05			10.734	9.661
0.622	360000.		0.7824E-05	0.6841E-05	11.156	10.041
		0.9180E-05			11.286	10.157
0.645	362500.		0.8880E-05	0.8880E-05	11.416	10.274
		0.6580E-05			11.536	10.384
0.667	365000.		0.1061E-04	0.1061E-04	11.659	10.493
		0.1264E-04			11.840	10.656
0.698	367500.		0.1130E-04	0.1130E-04	12.021	10.819
		0.9980E-05			12.164	10.948
0.723	370000.		0.1367E-04	0.1459E-04	12.308	11.077
		0.1830E-04			12.522	11.270
0.760	372000.		0.1596E-04	0.1596E-04	12.735	11.462
		0.1760E-04			12.897	11.607
0.787	374000.		0.1514E-04	0.1565E-04	13.058	11.753
		0.1717E-04			13.213	11.892
0.813	375000.		0.1765E-04	0.1765E-04	13.368	12.031
		0.1913E-04			13.534	12.181
0.840	377000.		0.2066E-04	0.2192E-04	13.700	12.330
		0.2445E-04			13.852	12.467
0.864	378000.		0.2365E-04	0.2365E-04	14.004	12.604
		.2265E-04			14.149	12.734
0.887	379000.		0.2375E-04	0.2375E-04	14.293	12.864
		0.2485E-04			14.452	13.006
0.912	380000.		.2285E-04	0.2285E-04	14.610	13.149
		0.2395E-04			14.748	13.273
0.933	381000.		0.2580E-04	0.2580E-04	14.885	13.396
		0.3165E-04			15.091	13.581
0.963	382000.		0.3165E-04	0.3165E-04	15.296	13.766
		0.3205E-04			15.522	13.970
0.996	383000.		0.3497E-04	0.3722E-04	15.747	14.173
		0.3980E-04			15.887	14.299
1.016	383500.		0.3375E-04	0.3375E-04	16.027	14.425
		0.2800E-04			16.129	14.516
1.030	384000.		0.3300E-04	0.3300E-04	16.232	14.607
		0.3400E-04			16.366	14.732
1.040	384500.		0.4315E-04	0.4315E-04	16.509	14.858
		0.4970E-04			16.691	15.022
1.073	385000.		0.4370E-04	0.4370E-04	16.877	15.186
		0.3910E-04			17.024	15.322
1.093	385500.		0.3608E-04	0.2402E-04	17.175	15.458
		0.2800E-04			17.192	15.473

TABLE C-6. (CONTINUED)

BASIC DATA		GAZDN CALCULATIONS			DAMAGE PARAMETER	
A IN.	N CYCLES	SIMPLE SLOPE(A)	SIMPLE SLOPE(P)	THREE PT. DIV.DIFF.	KMAX	DELTA K
1.095	385600.		0.5591E-04	0.8850E-04	17.218	15.487
		0.9100E-04			17.279	15.551
1.104	385700.		0.7775E-04	0.7775E-04	17.350	15.615
		0.6550E-04			17.407	15.662
1.110	385800.		0.3250E-04	0.3250E-04	17.455	15.709
		-0.5000E-06			17.454	15.709
1.111	385900.		0.2175E-04	0.2175E-04	17.454	15.709
		0.4470E-04			17.489	15.740
1.115	386000.		0.4117E-04	0.4343E-04	17.525	15.772
		0.4960E-04			17.690	15.921
1.135	386500.		0.4650E-04	0.7010E-04	17.856	16.070
		0.7600E-04			17.919	16.127
1.142	386600.		0.8217E-04	0.7908E-04	17.982	16.184
		0.8525E-04			18.126	16.314
1.160	386800.		0.5917E-04	0.5913E-04	18.270	16.443
		0.5700E-04			18.327	16.494
1.166	387000.		0.4900E-04	0.4900E-04	18.384	16.545
		0.6500E-04			18.497	16.647
1.179	387200.		0.5850E-04	0.5850E-04	18.610	16.749
		0.5200E-04			18.703	16.832
1.190	387400.		0.5375E-04	0.5375E-04	18.795	16.915
		0.5500E-04			18.895	17.005
1.201	387600.		0.5150E-04	0.5150E-04	18.995	17.095
		0.4750E-04			19.082	17.174
1.210	387800.		0.5562E-04	0.5562E-04	19.169	17.252
		0.6375E-04			19.267	17.359
1.223	388000.		0.7013E-04	0.7013E-04	19.406	17.466
		0.7650E-04			19.552	17.597
1.238	388200.		0.7763E-04	0.7763E-04	19.698	17.728
		0.7975E-04			19.851	17.866
1.254	388400.		0.7150E-04	0.6425E-04	20.005	18.005
		0.5700E-04			20.062	18.056
1.260	388500.		.E+00	.E+00	20.119	18.107
0.557	350000.		.E+00	.E+00	10.418	9.376
		0.8705E-05			10.869	9.782
0.637	360000.		0.8290E-05	0.9153E-05	11.320	10.188
		0.9440E-05			11.454	10.308
0.660	362500.		0.1066E-04	0.1066E-04	11.588	10.429
		0.1188E-04			11.757	10.581
0.690	365000.		0.1207E-04	0.1207E-04	11.927	10.734
		0.1218E-04			12.102	10.892
0.721	367500.		0.1466E-04	0.1466E-04	12.277	11.050
		0.1714E-04			12.528	11.275
0.763	370000.		0.1582E-04	0.1549E-04	12.778	11.500
		0.1472E-04			12.948	11.652
0.792	372000.		0.1775E-04	0.1775E-04	13.119	11.803
		0.2137E-04			13.377	12.036
0.834	374000.		0.2124E-04	0.1988E-04	13.632	12.268
		0.1890E-04			13.806	12.426
0.863	375500.		0.2190E-04	0.2190E-04	13.981	12.583
		0.2510E-04			14.219	12.797
0.900	377000.		0.2524E-04	0.2536E-04	14.457	13.011
		0.2560E-04			14.624	13.161
0.926	378000.		0.2581E-04	0.2580E-04	14.790	13.311
		0.2800E-04			14.967	13.467
0.952	379000.		0.2857E-04	0.2857E-04	15.136	13.622
		0.3116E-04			15.348	13.814
0.983	380000.		0.3770E-04	0.3370E-04	15.561	14.005
		0.3545E-04			15.811	14.230
1.018	381000.		0.3752E-04	0.3752E-04	16.061	14.455
		0.3980E-04			16.352	14.717
1.056	382000.		0.4127E-04	0.4127E-04	16.643	14.978
		0.4295E-04			16.974	15.276
1.101	383000.		0.4317E-04	0.4326E-04	17.304	15.574
		0.4404E-04			17.478	15.731
1.123	383500.		0.4945E-04	0.4945E-04	17.652	15.887
		0.5530E-04			17.882	16.094
1.150	384000.		0.4981E-04	0.4985E-04	18.112	16.301
		0.4620E-04			18.302	16.472
1.172	384500.		0.5550E-04	0.5555E-04	18.491	16.642
		0.6890E-04			18.790	16.911
1.206	385000.		0.6828E-04	0.6835E-04	19.089	17.180
		0.6900E-04			19.418	17.475

TABLE C-6. (CONTINUED)

BASIC DATA		DA/DN CALCULATIONS			DAMAGE PARAMETER	
A IN.	N CYCLES	SIMPLE SLOPE(A)	SIMPLE SLOPE(P)	THREE PT. DIV.DIFF.	KMAX	DELTA K
1.241	385000.		0.6837E-04	0.5327E-04	19.744	17.770
		0.5000E-04			19.797	17.817
1.245	385500.		0.7225E-04	0.7225E-04	19.841	17.857
		0.9400E-04			19.934	17.941
1.255	385700.		0.8050E-04	0.8050E-04	20.027	18.024
		0.2050E-04			20.053	18.048
1.258	385800.		0.8875E-04	0.8875E-04	20.080	18.072
		0.1410E-03			20.191	18.172
1.269	385900.		0.1158E-03	0.1158E-03	20.303	18.273
		0.1200E-03			20.427	18.384
1.281	386000.		0.9242E-04	0.1149E-03	20.550	18.495
		0.8690E-04			21.018	18.917
1.324	386500.		0.8825E-04	0.9465E-04	21.487	19.338
		0.9550E-04			21.595	19.435
1.334	386600.		0.1096E-03	0.1022E-03	21.703	19.533
		0.1158E-03			21.974	19.777
1.357	386800.		0.1078E-03	0.1036E-03	22.245	20.021
		0.9150E-04			22.469	20.222
1.375	387000.		0.1066E-03	0.1066E-03	22.692	20.423
		0.1097E-03			22.972	20.675
1.397	387200.		0.1151E-03	0.1151E-03	23.252	20.927
		0.1265E-03			23.575	21.218
1.421	387400.		0.1084E-03	0.1084E-03	23.899	21.509
		0.9625E-04			24.170	21.753
1.441	387600.		0.1352E-03	0.1352E-03	24.442	21.998
		0.1742E-03			24.967	22.470
1.475	387800.		0.1620E-03	0.1620E-03	25.492	22.943
		0.1407E-03			25.983	23.385
1.505	388000.		0.1703E-03	0.1703E-03	26.474	23.827
		0.1908E-03			27.162	24.446
1.544	388200.		0.2022E-03	0.2022E-03	27.850	25.065
		0.2137E-03			28.723	25.851
1.586	388400.		0.2227E-03	0.2316E-03	29.596	26.636
		0.2415E-03			30.144	27.130
1.610	388500.		.E+00	.E+00	30.692	27.623
0.528	350000.		.E+00	.E+00	10.092	9.082
		0.8250E-05			10.556	9.501
0.610	360000.		0.8744E-05	0.1027E-04	11.021	9.919
		0.1072E-04			11.173	10.055
0.637	362500.		0.1195E-04	0.1195E-04	11.324	10.192
		0.1318E-04			11.511	10.360
0.670	365000.		0.1340E-04	0.1340E-04	11.698	10.528
		0.1362E-04			11.893	10.704
0.704	367500.		0.1418E-04	0.1418E-04	12.088	10.879
		0.1474E-04			12.301	11.071
0.741	370000.		0.1530E-04	0.1544E-04	12.515	11.264
		0.1610E-04			12.707	11.433
0.773	372000.		0.1742E-04	0.1742E-04	12.891	11.602
		0.1885E-04			13.117	11.805
0.811	374000.		0.1879E-04	0.1823E-04	13.343	12.008
		0.1777E-04			13.505	12.155
0.837	375500.		0.1882E-04	0.1882E-04	13.668	12.301
		0.1987E-04			13.853	12.468
0.867	377000.		0.2212E-04	0.2325E-04	14.038	12.634
		0.2550E-04			14.200	12.780
0.893	378000.		0.2715E-04	0.2715E-04	14.361	12.925
		0.2980E-04			14.548	13.093
0.921	379000.		0.3063E-04	0.3065E-04	14.734	13.261
		0.3250E-04			14.950	13.455
0.954	380000.		0.3163E-04	0.3160E-04	15.166	13.649
		0.3700E-04			15.376	13.838
0.985	381000.		0.3347E-04	0.3349E-04	15.586	14.027
		0.3655E-04			15.842	14.259
1.021	382000.		0.3755E-04	0.3755E-04	16.099	14.489
		0.3785E-04			16.377	14.739
1.059	383000.		0.3510E-04	0.3835E-04	16.655	14.990
		0.2700E-04			16.745	15.070
1.071	383500.		0.3500E-04	0.3500E-04	16.834	15.151
		0.4600E-04			17.017	15.312
1.094	384000.		0.4700E-04	0.4700E-04	17.197	15.473
		0.4700E-04			17.382	15.644
1.117	384500.		0.4900E-04	0.4900E-04	17.571	15.814
		0.4200E-04			17.744	15.970

TABLE C-6. (CONTINUED)

BASIC DATA		DA/DN CALCULATIONS			DAMAGE PARAMETER	
A IN.	N CYCLES	SIMPLE SLOPE(A)	SIMPLE SLOPE(P)	THREE PT. DIV.DIFF.	KMAX	DELTA K
1.139	[illegible]	[illegible]	[illegible]	[illegible]	17.917	16.175
		[illegible]			18.120	16.308
1.163	[illegible]		[illegible]	[illegible]	[illegible]	16.491
		[illegible]			[illegible]	16.528
1.167	[illegible]		[illegible]	[illegible]	[illegible]	16.564
		[illegible]			18.462	16.616
1.174	[illegible]		[illegible]	[illegible]	[illegible]	16.667
		[illegible]			[illegible]	16.728
1.182	[illegible]		[illegible]	[illegible]	[illegible]	16.748
		[illegible]			[illegible]	16.818
1.185	[illegible]		[illegible]	[illegible]	[illegible]	[illegible]
		[illegible]			[illegible]	16.872
1.188	[illegible]		[illegible]	[illegible]	[illegible]	16.893
		[illegible]			19.386	17.177
1.227	[illegible]		[illegible]	[illegible]	[illegible]	[illegible]
		[illegible]			19.464	17.517
1.229	[illegible]		[illegible]	[illegible]	19.526	17.574
		[illegible]			19.652	17.686
1.242	[illegible]		[illegible]	[illegible]	19.777	17.799
		[illegible]			19.913	17.922
1.256	[illegible]		[illegible]	[illegible]	[illegible]	18.045
		[illegible]			20.188	18.169
1.270	[illegible]		[illegible]	[illegible]	20.325	18.293
		[illegible]			20.495	18.445
1.286	[illegible]		[illegible]	[illegible]	[illegible]	18.587
		[illegible]			20.868	18.761
1.305	[illegible]		[illegible]	[illegible]	21.072	18.965
		[illegible]			21.253	19.128
1.322	[illegible]		[illegible]	[illegible]	21.474	19.291
		[illegible]			21.620	19.458
1.335	[illegible]		[illegible]	[illegible]	21.807	19.626
		[illegible]			22.057	19.851
1.359	[illegible]		[illegible]	[illegible]	22.307	20.076
		[illegible]			22.492	20.243
1.375	[illegible]		[illegible]	[illegible]	22.677	20.410
		[illegible]			22.792	20.513
1.384	[illegible]		[illegible]	[illegible]	22.906	20.615

TABLE C-7. FATIGUE-CRACK-PROPAGATION DATA FOR 2124-T851 AT R = 0.500

SPECIMEN NO.= AL-3-1-.5 YIELD STRENGTH= 53.20 THICKNESS= 0.500 WIDTH= 6.000
SPECIMEN TYPE=CC, MAXIMUM STRESS OR LOAD= 3.000 STRESS RATIO= 0.500

BASIC DATA A IN.	N CYCLES	DA/DN CALCULATIONS SIMPLE SLOPE(A)	SIMPLE SLOPE(P)	THREE PT. DIV.DIFF.	DAMAGE PARAMETER KMAX	DELTA K
0.422	22360000.		.E+00	.E+00	3.495	1.748
		0.3100E-08			3.502	1.751
0.425	23360000.		0.3450E-08	0.3450E-08	3.509	1.754
		0.3900E-08			3.517	1.758
0.429	24360000.		0.3900E-08	0.3900E-08	3.525	1.763
		0.4000E-08			3.534	1.767
0.433	25360000.		0.7975E-08	0.7975E-08	3.542	1.771
		0.1175E-07			3.568	1.784
0.444	26360000.		0.7850E-08	0.7850E-08	3.593	1.796
		0.3950E-08			3.601	1.801
0.449	27360000.		0.1250E-08	0.1250E-08	3.610	1.805
		-.1450E-08			3.606	1.803
0.447	28360000.		.E+00	-.6617E-23	3.603	1.802
		0.1450E-08			3.606	1.803
0.449	29360000.		0.4574E-08	0.5001E-08	3.610	1.805
		0.8125E-08			3.625	1.812
0.456	30240000.		0.7540E-08	0.6696E-08	3.640	1.820
		0.6111E-08			3.645	1.822
0.458	30600000.		.E+00	.E+00	3.649	1.825
0.392	22360000.		.E+00	.E+00	3.362	1.681
		0.1940E-07			3.405	1.703
0.411	23360000.		0.2642E-07	0.2642E-07	3.448	1.724
		0.3345E-07			3.520	1.760
0.444	24360000.		0.3345E-07	0.3345E-07	3.593	1.795
		0.4545E-07			3.688	1.844
0.490	25360000.		0.5823E-07	0.5822E-07	3.783	1.892
		0.7130E-07			3.926	1.963
0.561	26360000.		0.7395E-07	0.7395E-07	4.069	2.035
		0.7690E-07			4.219	2.109
0.639	27360000.		0.8710E-07	0.8710E-07	4.368	2.184
		0.9730E-07			4.551	2.275
0.735	28360000.		0.1048E-06	0.1048E-06	4.734	2.367
		0.1123E-06			4.942	2.471
0.847	29360000.		0.1329E-06	0.1356E-06	5.149	2.574
		0.1562E-06			5.402	2.701
0.985	30240000.		0.1559E-06	0.1555E-06	5.656	2.828
		0.1553E-06			5.760	2.880
1.041	30600000.		.E+00	.E+00	5.864	2.932
0.441	22360000.		.E+00	.E+00	3.578	1.789
		0.6900E-07			3.722	1.861
0.510	23360000.		0.6207E-07	0.6207E-07	3.866	1.933
		0.5515E-07			3.976	1.988
0.565	24360000.		0.7817E-07	0.7817E-07	4.086	2.043
		0.1012E-06			4.281	2.141
0.666	25360000.		0.1122E-06	0.1122E-06	4.476	2.239
		0.1232E-06			4.706	2.353
0.790	26360000.		0.1350E-06	0.1350E-06	4.936	2.468
		0.1468E-06			5.206	2.603
0.936	27360000.		0.1613E-06	0.1613E-06	5.477	2.738
		0.1759E-06			5.805	2.903
1.112	28360000.		0.2087E-06	0.2087E-06	6.134	3.067
		0.2415E-06			6.616	3.308
1.354	29360000.		0.3427E-06	0.3565E-06	7.098	3.549
		0.4577E-06			8.073	4.037
1.757	30240000.		.E+00	.E+00	9.048	4.524

SPECIMEN NO.= AL-6A-1-.5 YIELD STRENGTH= 53.20 THICKNESS= 0.500 WIDTH= 4.000
SPECIMEN TYPE=CC, MAXIMUM STRESS OR LOAD= 3.500 STRESS RATIO= 0.500

0.334	50000.		.E+00	.E+00	5.729	2.864
		0.3750E-06			5.797	2.898
0.349	90000.		0.2287E-06	0.2238E-06	5.865	2.933
		0.8200E-07			5.880	2.940
0.352	130000.		0.1569E-06	0.1569E-06	5.895	2.948
		0.2312E-06			5.937	2.968
0.361	170000.		0.1756E-06	0.1756E-06	5.978	2.989
		0.1200E-06			6.000	3.000

TABLE C-7. (CONTINUED)

BASIC DATA		DA/DN CALCULATIONS			DAMAGE PARAMETER	
A IN.	N CYCLES	SIMPLE SLOPE(A)	SIMPLE SLOPE(P)	THREE PT. DIV.DIFF.	KMAX	DELTA K
0.366	210000.		0.2919E-06	0.2919E-06	6.021	3.011
		0.4638E-06			6.103	3.052
0.385	250000.		0.3269E-06	0.3269E-06	6.186	3.093
		0.1900E-06			6.219	3.109
0.392	290000.		0.3431E-06	0.3431E-06	6.252	3.126
		0.4902E-06			6.339	3.169
0.412	330000.		0.2762E-06	0.2762E-06	6.425	3.212
		0.5625E-07			6.435	3.217
0.414	370000.		0.1769E-06	0.1769E-06	6.444	3.222
		0.2975E-06			6.496	3.248
0.426	410000.		0.3362E-06	0.3362E-06	6.547	3.273
		0.3750E-06			6.611	3.305
0.441	450000.		0.2810E-06	0.2810E-06	6.675	3.337
		0.1850E-06			6.706	3.353
0.449	490000.		0.3394E-06	0.3394E-06	6.738	3.369
		0.4937E-06			6.821	3.411
0.463	530000.		0.4119E-06	0.4119E-06	6.904	3.452
		0.7000E-06			6.960	3.480
0.482	570000.		0.4181E-06	0.4181E-06	7.015	3.508
		0.5062E-06			7.100	3.550
0.502	610000.		.E+00	.E+00	7.184	3.592
0.339	50000.		.E+00	.E+00	5.780	2.890
		0.1125E-06			5.800	2.900
0.344	90000.		0.1056E-06	0.1056E-06	5.821	2.910
		0.9875E-07			5.839	2.919
0.348	130000.		0.2075E-06	0.2075E-06	5.857	2.928
		0.7183E-06			5.914	2.957
0.360	170000.		0.2969E-06	0.2969E-06	5.971	2.985
		0.2775E-06			6.020	3.010
0.371	210000.		0.2494E-06	0.2494E-06	6.070	3.035
		0.2212E-06			6.109	3.054
0.380	250000.		0.2538E-06	0.2538E-06	6.148	3.074
		0.2862E-06			6.198	3.099
0.392	290000.		0.3169E-06	0.3169E-06	6.249	3.124
		0.3475E-06			6.309	3.155
0.406	330000.		0.2075E-06	0.2075E-06	6.370	3.185
		0.6750E-07			6.382	3.191
0.408	370000.		0.1044E-06	0.1044E-06	6.393	3.197
		0.1412E-06			6.418	3.209
0.414	410000.		0.3078E-06	0.3078E-06	6.442	3.221
		0.4875E-06			6.522	3.261
0.433	450000.		0.3750E-06	0.3750E-06	6.602	3.301
		0.2508E-06			6.651	3.325
0.444	490000.		0.2225E-06	0.2225E-06	6.699	3.350
		0.1812E-06			6.726	3.363
0.450	530000.		0.1900E-06	0.1900E-06	6.754	3.377
		0.2198E-06			6.791	3.395
0.459	570000.		0.2119E-06	0.2119E-06	6.828	3.414
		0.2500E-06			6.862	3.431
0.467	610000.		.E+00	.E+00	6.897	3.448
0.340	50000.		.E+00	.E+00	5.783	2.892
		0.2212E-06			5.823	2.912
0.343	90000.		0.3306E-06	0.3306E-06	5.864	2.932
		0.4400E-06			5.943	2.971
0.366	130000.		0.2669E-06	0.2669E-06	6.022	3.011
		0.9375E-07			6.038	3.019
0.370	170000.		0.1206E-06	0.1206E-06	6.055	3.028
		0.1475E-06			6.081	3.041
0.376	210000.		0.1475E-06	0.1475E-06	6.108	3.054
		0.1475E-06			6.134	3.067
0.382	250000.		0.2675E-06	0.2675E-06	6.160	3.080
		0.3875E-06			6.228	3.114
0.397	290000.		0.2463E-06	0.2463E-06	6.296	3.148
		0.1000E-06			6.314	3.157
0.401	330000.		0.1406E-06	0.1406E-06	6.332	3.166
		0.1762E-06			6.363	3.181
0.408	370000.		0.1125E-06	0.1125E-06	6.393	3.197
		0.4875E-07			6.402	3.201
0.411	410000.		0.2188E-06	0.2187E-06	6.410	3.205
		0.2588E-06			6.477	3.239
0.426	450000.		0.3513E-06	0.3513E-06	6.544	3.272
		0.3187E-06			6.598	3.299

TABLE C-7. (CONTINUED)

BASIC DATA		DA/DN CALCULATIONS			DAMAGE PARAMETER	
A IN.	N CYCLES	SIMPLE SLOPE(A)	SIMPLE SLOPE (P)	THREE PT. DIV.DIFF.	KMAX	DELTA K
0.438	430000.		0.3162E-06	0.3100E-06	6.651	3.326
		0.3762E-06			6.703	3.352
0.451	530000.		0.2106E-06	0.2106E-06	6.755	3.378
		0.1112E-06			6.775	3.387
0.455	570000.		0.2344E-06	0.2344E-06	6.794	3.397
		0.3538E-06			6.854	3.427
0.489	610000.		.E+00	.E+00	6.914	3.457

SPECIMEN NO.= AL-69-0-.5 YIELD STRENGTH= 63.20 THICKNESS= 0.500 WIDTH= 4.000
SPECIMEN TYPE=CC, MAXIMUM STRESS OF LOAD= 8.000 STRESS RATIO= 0.500

0.546	650000.		.E+00	.E+00	10.986	5.493
		0.1775E-05			11.067	5.533
0.560	660000.		0.1762E-05	0.1762E-05	11.147	5.573
		0.2196E-05			11.278	5.639
0.581	670000.		0.2345E-05	0.2345E-05	11.410	5.705
		0.2501E-05			11.560	5.780
0.607	680000.		0.2253E-05	0.2253E-05	11.710	5.855
		0.2015E-05			11.831	5.916
0.627	690000.		0.2112E-05	0.2112E-05	11.952	5.976
		0.2220E-05			12.086	6.043
0.649	700000.		0.2332E-05	0.2332E-05	12.220	6.110
		0.2445E-05			12.368	6.184
0.677	710000.		0.2823E-05	0.2823E-05	12.516	6.258
		0.3200E-05			12.712	6.356
0.705	720000.		0.3570E-05	0.3940E-05	12.907	6.454
		0.4310E-05			13.040	6.520
0.727	725000.		0.3425E-05	0.3425E-05	13.173	6.587
		0.2540E-05			13.252	6.626
0.739	730000.		0.3850E-05	0.3850E-05	13.331	6.665
		0.5160E-05			13.492	6.746
0.765	735000.		.E+00	.E+00	13.654	6.827
0.523	650000.		.E+00	.E+00	10.701	5.351
		0.1370E-05			10.781	5.391
0.536	660000.		0.1487E-05	0.1487E-05	10.861	5.431
		0.1645E-05			10.960	5.480
0.552	670000.		0.1947E-05	0.1947E-05	11.059	5.530
		0.2203E-05			11.194	5.597
0.575	680000.		0.2058E-05	0.2058E-05	11.330	5.665
		0.1869E-05			11.442	5.721
0.593	690000.		0.1962E-05	0.1962E-05	11.554	5.777
		0.2102E-05			11.677	5.839
0.614	700000.		0.2308E-05	0.2308E-05	11.801	5.901
		0.2595E-05			11.955	5.978
0.640	710000.		0.2773E-05	0.2773E-05	12.109	6.055
		0.2900E-05			12.290	6.145
0.669	720000.		0.2957E-05	0.2917E-05	12.471	6.236
		0.2893E-05			12.559	6.279
0.684	725000.		0.3280E-05	0.3280E-05	12.647	6.323
		0.3630E-05			12.759	6.380
0.702	730000.		0.3695E-05	0.3695E-05	12.872	6.436
		0.3710E-05			12.986	6.493
0.721	735000.		.E+00	.E+00	13.100	6.550
0.521	650000.		.E+00	.E+00	10.686	5.343
		0.1370E-05			10.766	5.383
0.535	660000.		0.1458E-05	0.1458E-05	10.846	5.423
		0.1895E-05			10.942	5.471
0.550	670000.		0.1705E-05	0.1705E-05	11.037	5.518
		0.1825E-05			11.147	5.573
0.569	680000.		0.2237E-05	0.2237E-05	11.258	5.628
		0.2600E-05			11.415	5.708
0.595	690000.		0.2275E-05	0.2275E-05	11.575	5.787
		0.1900E-05			11.689	5.844
0.614	700000.		0.2465E-05	0.2465E-05	11.803	5.902
		0.3170E-05			11.986	5.993
0.645	710000.		0.2248E-05	0.2248E-05	12.168	6.084
		0.1465E-05			12.257	6.128
0.659	720000.		0.1390E-05	0.2515E-05	12.346	6.173
		0.3140E-05			12.438	6.219

TABLE C-7. (CONTINUED)

BASIC DATA		DA/DN CALCULATIONS			DAMAGE PARAMETER	
A IN.	N CYCLES	SIMPLE SLOPE(A)	SIMPLE SLOPE(P)	THREE PT. DIV.DIFF.	KMAX	DELTA K
0.674	725000.		0.2780E-05	0.2780E-05	12.530	6.265
		0.2505E-05			12.637	6.314
0.687	730000.		0.2390E-05	0.2590E-05	12.684	6.342
		0.3480E-05			12.790	6.395
0.704	735000.		.E+00	.E+00	12.896	6.448

SPECIMEN NO.= AL-60-1-.5 YIELD STRENGTH= 63.20 THICKNESS= 0.500 WIDTH= 4.000
SPECIMEN TYPE=CC, MAXIMUM STRESS OR LOAD= 11.500 STRESS RATIO= 0.500

0.765	735000.		.E+00	.E+00	19.627	9.814
		0.3002E-04			21.049	10.525
0.915	740000.		0.5226E-04	0.1412E-03	22.471	11.236
		0.1634E-03			24.239	12.120
1.079	741000.		.E+00	.E+00	26.007	13.004
0.721	735000.		.E+00	.E+00	18.831	9.416
		0.1933E-04			19.704	9.852
0.817	740000.		0.2661E-04	0.2612E-04	20.577	10.288
		0.2756E-04			20.835	10.418
0.845	741000.		.E+00	.E+00	21.093	10.547
0.704	735000.		.E+00	.E+00	18.538	9.269
		0.2190E-04			19.527	9.763
0.814	740000.		0.2633E-04	0.4403E-04	20.516	10.258
		0.4845E-04			20.974	10.487
0.862	741000.		.E+00	.E+00	21.431	10.715

TABLE C-8. FATIGUE-CRACK-PROPAGATION DATA FOR 2124-T851 AT R = 0.250

SPECIMEN NO.= AL-2-1-.25 YIELD STRENGTH= 63.20 THICKNESS= 0.500 WIDTH= 6.000
SPECIMEN TYPE=CC, MAXIMUM STRESS OR LOAD= 2.500 STRESS RATIO= 0.250

BASIC DATA A IN.	N CYCLES	DA/DN CALCULATIONS SIMPLE SLOPE(A)	SIMPLE SLOPE(P)	THREE PT. DIV.DIFF.	DAMAGE PARAMETER KMAX	DELTA K
0.479	19760000.		.E+00	.E+00	3.115	2.336
		0.2308E-07			3.197	2.398
0.527	20760000.		0.3599E-07	0.4875E-07	3.279	2.459
		0.6077E-07			3.376	2.532
0.586	21730000.		0.6246E-07	0.6241E-07	3.473	2.605
		0.6410E-07			3.576	2.682
0.650	22730000.		0.8338E-07	0.8397E-07	3.679	2.759
		0.1039E-06			3.841	2.881
0.754	23730000.		0.1165E-06	0.1165E-06	4.003	3.002
		0.1292E-06			4.202	3.151
0.883	24730000.		0.1424E-06	0.1425E-06	4.400	3.300
		0.1557E-06			4.638	3.479
1.037	25720000.		0.1923E-06	0.1919E-06	4.876	3.657
		0.2295E-06			5.244	3.933
1.266	26720000.		0.3306E-06	0.3349E-06	5.613	4.210
		0.4370E-06			6.413	4.810
1.685	27680000.		.E+00	.E+00	7.214	5.410
0.335	19760000.		.E+00	.E+00	2.583	1.937
		0.5175E-08			2.603	1.952
0.345	20760000.		0.1268E-07	0.2064E-07	2.624	1.968
		0.2814E-07			2.676	2.007
0.372	21730000.		0.4193E-07	0.4152E-07	2.729	2.047
		0.5530E-07			2.831	2.124
0.428	22730000.		0.1257E-07	0.1258E-07	2.934	2.200
		-.3015E-07			2.879	2.159
0.398	23730000.		-.1248E-07	-.1248E-07	2.824	2.118
		0.5200E-08			2.833	2.125
0.403	24730000.		0.1035E-07	0.1101E-07	2.843	2.132
		0.1677E-07			2.873	2.155
0.413	25720000.		0.2884E-07	0.2872E-07	2.904	2.178
		0.4080E-07			2.976	2.232
0.460	26720000.		0.2265E-07	0.2190E-07	3.049	2.287
		0.3750E-08			3.056	2.292
0.464	27680000.		-.5071E-08	-.1550E-07	3.062	2.296
		-.2432E-07			3.043	2.282
0.453	28120000.		.E+00	.E+00	3.024	2.268
0.395	19760000.		.E+00	.E+00	2.815	2.112
		0.2675E-08			2.825	2.119
0.401	20760000.		0.2912E-08	0.3165E-08	2.835	2.126
		0.3402E-08			2.841	2.131
0.404	21730000.		-.1599E-08	-.1449E-08	2.847	2.136
		-.6450E-08			2.836	2.127
0.398	22730000.		0.5800E-08	0.5800E-08	2.824	2.118
		0.1805E-07			2.857	2.143
0.416	23730000.		0.1325E-07	0.1325E-07	2.890	2.167
		0.8450E-08			2.905	2.179
0.424	24730000.		0.1070E-07	0.1073E-07	2.921	2.190
		0.1298E-07			2.944	2.208
0.437	25720000.		0.1621E-07	0.1617E-07	2.967	2.225
		0.1940E-07			3.001	2.251
0.456	26720000.		0.9949E-08	0.9555E-08	3.036	2.277
		0.1042E-08			3.036	2.277
0.456	27680000.		0.2643E-08	0.5643E-08	3.036	2.277
		0.8182E-08			3.042	2.282
0.460	28120000.		.E+00	.E+00	3.049	2.287

SPECIMEN NO.= AL-7A-1-.2 YIELD STRENGTH= 63.20 THICKNESS= 0.500 WIDTH= 4.000
SPECIMEN TYPE=CC, MAXIMUM STRESS OR LOAD= 6.000 STRESS RATIO= 0.250

0.335	30000.		.E+00	.E+00	6.250	4.694
		0.4400E-06			6.282	4.711
0.339	40000.		0.6800E-06	0.6800E-06	6.304	4.728
		0.9150E-06			6.349	4.762
0.348	50000.		0.9600E-06	0.9375E-06	6.395	4.796
		0.9825E-06			6.491	4.868
0.368	70000.		0.9025E-06	0.9025E-06	6.587	4.940
		0.8225E-06			6.667	5.000

TABLE C-8. (CONTINUED)

BASIC DATA		DA/DN CALCULATIONS			DAMAGE PARAMETER	
A IN.	N CYCLES	SIMPLE SLOPE(A)	SIMPLE SLOPE(P)	THREE PT. DIV.DIFF.	KMAX	DELTA K
0.384	90000.		0.4625E-06	0.4625E-06	6.746	5.060
		0.1025E-06			6.756	5.067
0.386	100000.		0.3563E-06	0.3563E-06	6.766	5.074
		0.6100E-06			6.824	5.118
0.393	130000.		0.5800E-06	0.5800E-06	6.882	5.162
		0.9500E-06			6.934	5.201
0.410	150000.		0.1021E-05	0.1021E-05	6.986	5.240
		0.1495E-05			7.126	5.345
0.440	170000.		0.1315E-05	0.1315E-05	7.266	5.449
		0.1107E-05			7.371	5.528
0.462	190000.		0.1132E-05	0.1132E-05	7.476	5.607
		0.1128E-05			7.579	5.685
0.485	210000.		0.9400E-06	0.9400E-06	7.683	5.762
		0.7525E-06			7.751	5.813
0.500	230000.		0.7100E-06	0.7100E-06	7.820	5.865
		0.6675E-06			7.880	5.910
0.513	250000.		0.1009E-05	0.1009E-05	7.941	5.956
		0.1750E-05			8.063	6.047
0.540	270000.		0.1157E-05	0.1157E-05	8.185	6.139
		0.9600E-06			8.272	6.204
0.559	290000.		0.1291E-05	0.1291E-05	8.359	6.269
		0.1018E-05			8.505	6.379
0.592	310000.		0.1560E-05	0.1560E-05	8.651	6.488
		0.1972E-05			8.786	6.590
0.622	330000.		0.1539E-05	0.1539E-05	8.920	6.691
		0.1975E-05			9.064	6.798
0.653	350000.		.E+00	.E+00	9.207	6.905
0.335	30000.		.E+00	.E+00	6.259	4.694
		0.8400E-06			6.301	4.726
0.343	40000.		0.6275E-06	0.6275E-06	6.343	4.757
		0.4150E-06			6.364	4.773
0.347	50000.		0.4617E-06	0.4383E-06	6.384	4.788
		0.4850E-06			6.432	4.824
0.357	70000.		0.4675E-06	0.4675E-06	6.460	4.860
		0.4500E-06			6.524	4.893
0.366	90000.		0.5337E-06	0.5337E-06	6.568	4.926
		0.6175E-06			6.628	4.971
0.378	110000.		-.4227E-07	0.1037E-05	6.687	5.016
		0.1010E-05			6.784	5.088
0.399	130000.		0.1131E-05	0.1131E-05	6.881	5.161
		0.1253E-05			6.999	5.249
0.424	150000.		0.1289E-05	0.1289E-05	7.117	5.338
		0.1325E-05			7.240	5.430
0.450	170000.		0.1009E-05	0.1009E-05	7.364	5.523
		0.8925E-06			7.427	5.571
0.464	190000.		0.8888E-06	0.8888E-06	7.491	5.618
		0.1095E-05			7.591	5.693
0.486	210000.		0.1140E-05	0.1140E-05	7.690	5.768
		0.1195E-05			7.799	5.849
0.509	230000.		0.1307E-05	0.1307E-05	7.908	5.931
		0.1400E-05			8.036	6.027
0.538	250000.		0.1281E-05	0.1281E-05	8.164	6.123
		0.1142E-05			8.265	6.201
0.561	270000.		0.1185E-05	0.1185E-05	8.371	6.278
		0.1228E-05			8.481	6.361
0.585	290000.		0.1534E-05	0.1534E-05	8.592	6.444
		0.1840E-05			8.758	6.568
0.622	310000.		0.1807E-05	0.1807E-05	8.924	6.693
		0.1775E-05			9.084	6.813
0.658	330000.		0.2036E-05	0.2036E-05	9.245	6.934
		0.2248E-05			9.455	7.091
0.704	350000.		.E+00	.E+00	9.665	7.249
0.333	30000.		.E+00	.E+00	6.243	4.682
		0.6400E-06			6.275	4.706
0.339	40000.		0.7625E-06	0.7625E-06	6.307	4.730
		0.8800E-06			6.351	4.763
0.348	50000.		0.8917E-06	0.8883E-06	6.395	4.796
		0.8950E-06			6.483	4.862
0.366	70000.		0.9212E-06	0.9212E-06	6.571	4.928
		0.9475E-06			6.662	4.997

TABLE C-8. (CONTINUED)

BASIC DATA		DA/DN CALCULATIONS			DAMAGE PARAMETER	
A IN.	N CYCLES	SIMPLE SLOPE (A)	SIMPLE SLOPE (B)	THREE PT. DIV.DIFF.	KMAX	DELTA K
0.385	960000.		0.7562E-06	0.7562E-06	6.754	5.065
		0.5650E-06			6.808	5.106
0.396	1100000.		0.8387E-06	0.8387E-06	6.862	5.146
		0.1112E-05			6.967	5.225
0.419	1300000.		0.9663E-06	0.9663E-06	7.072	5.304
		0.8200E-06			7.149	5.362
0.435	1500000.		0.9100E-06	0.9100E-06	7.225	5.419
		1.0000E-06			7.318	5.489
0.455	1700000.		0.1175E-05	0.1175E-05	7.411	5.558
		0.1780E-05			7.535	5.651
0.482	1900000.		0.1139E-05	0.1139E-05	7.659	5.744
		.9275E-06			7.743	5.807
0.501	2100000.		0.1129E-05	0.1129E-05	7.828	5.871
		0.1380E-05			7.948	5.961
0.527	2300000.		0.1471E-05	0.1471E-05	8.069	6.052
		0.1513E-05			8.214	6.161
0.560	2500000.		0.1502E-05	0.1502E-05	8.360	6.270
		0.1397E-05			8.485	6.364
0.587	2700000.		0.1764E-05	0.1764E-05	8.611	6.458
		0.1775E-05			8.731	6.548
0.614	2900000.		0.1664E-05	0.1664E-05	8.851	6.639
		0.1992E-05			9.032	6.774
0.654	3100000.		0.2174E-05	0.2174E-05	9.212	6.909
		0.2759E-05			9.427	7.070
0.701	3300000.		0.2541E-05	0.2541E-05	9.642	7.232
		0.2708E-05			9.898	7.422
0.756	3500000.		.E+00	.E+00	10.149	7.612

SPECIMEN NO.= AL-78-1-.2 YIELD STRENGTH= 67.00 THICKNESS= 0.50 WIDTH= 4.000
SPECIMEN TYPE=CC, MAXIMUM STRESS OF LOAD= 8.000 STRESS RATIO= 0.250

0.700	360000.		.E+00	.E+00	12.844	9.633
		0.4130E-05			12.971	9.728
0.721	365000.		0.3975E-05	0.3975E-05	13.098	9.823
		0.3820E-05			13.216	9.912
0.740	370000.		0.4460E-05	0.4460E-05	13.334	10.001
		0.5100E-05			13.494	10.121
0.765	375000.		0.7585E-05	0.7585E-05	13.654	10.240
		0.1007E-04			13.975	10.481
0.816	380000.		0.8913E-05	0.7757E-05	14.296	10.722
		0.8610E-05			14.404	10.803
0.832	382500.		0.9290E-05	0.9290E-05	14.511	10.883
		0.1198E-04			14.709	11.031
0.862	385000.		0.1226E-04	0.1257E-04	14.906	11.180
		0.1205E-04			14.993	11.245
0.875	386000.		0.1377E-04	0.1377E-04	15.080	11.310
		0.1500E-04			15.178	11.384
0.890	387000.		0.1325E-04	0.1325E-04	15.276	11.457
		0.1200E-04			15.359	11.519
0.901	388000.		0.1447E-04	0.1693E-04	15.441	11.581
		0.1202E-04			15.508	11.631
0.911	388500.		0.1350E-04	0.1350E-04	15.575	11.681
		0.7600E-05			15.601	11.701
0.915	389000.		0.1115E-04	0.1115E-04	15.627	11.720
		0.1470E-04			15.679	11.759
0.922	389500.		0.2473E-04	0.2287E-04	15.770	11.797
		0.7200E-04			15.791	11.835
0.931	389600.		.E+00	.E+00	15.832	11.874
0.748	360000.		.E+00	.E+00	13.439	10.079
		0.5580E-05			13.614	10.210
0.776	365000.		0.4440E-05	0.4440E-05	13.788	10.342
		0.3300E-05			13.894	10.421
0.793	370000.		0.5695E-05	0.5695E-05	13.999	10.499
		0.8900E-05			14.261	10.695
0.833	375000.		0.9205E-05	0.9205E-05	14.522	10.891
		0.1032E-04			14.868	11.149
0.885	380000.		0.1019E-04	0.1007E-04	15.209	11.407
		0.9945E-05			15.379	11.535
0.909	382500.		0.1136E-04	0.1136E-04	15.550	11.662
		0.1278E-04			15.774	11.830

TABLE C-8. (CONTINUED)

BASIC DATA		DA/DN CALCULATIONS			DAMAGE PARAMETER	
A IN.	N CYCLES	SIMPLE SLOPE(A)	SIMPLE SLOPE(P)	THREE PT. DIV.DIFF.	KMAX	DELTA K
0.941	395000.		0.1373E-04	0.1515E-04	15.998	11.998
		0.1610E-04			16.113	12.085
0.957	396000.		0.1610E-04	0.1610E-04	16.228	12.171
		0.1610E-04			16.345	12.259
0.974	397000.		0.1550E-04	0.1550E-04	16.462	12.347
		0.1490E-04			16.572	12.429
0.988	398000.		0.1567E-04	0.1643E-04	16.682	12.512
		0.1720E-04			16.746	12.560
0.997	398500.		0.1765E-04	0.1365E-04	16.811	12.608
		0.1100E-04			16.849	12.636
1.002	399000.		0.2045E-04	0.2045E-04	16.887	12.665
		0.3080E-04			17.003	12.753
1.017	399500.		0.3792E-04	0.6638E-04	17.120	12.840
		0.7350E-04			17.177	12.883
1.025	399600.		.E+00	.E+00	17.237	12.925
0.828	360000.		.E+00	.E+00	14.457	10.843
		0.1585E-04			14.989	11.241
0.907	365000.		0.9760E-05	0.9760E-05	15.520	11.640
		0.3670E-05			15.648	11.736
0.926	370000.		0.5730E-05	0.5730E-05	15.775	11.831
		0.7790E-05			16.053	12.040
0.965	375000.		0.1106E-04	0.1106E-04	16.331	12.248
		0.1474E-04			16.871	12.653
1.036	380000.		0.1749E-04	0.2063E-04	17.411	13.058
		0.2778E-04			17.891	13.419
1.096	382500.		0.2499E-04	0.2499E-04	18.372	13.779
		0.2626E-04			19.945	14.959
1.161	385000.		0.2877E-04	0.3163E-04	19.518	14.639
		0.3780E-04			19.835	14.876
1.195	386000.		0.4237E-04	0.4237E-04	20.152	15.114
		0.5095E-04			20.662	15.496
1.246	387000.		0.5258E-04	0.5258E-04	21.171	15.878
		0.5420E-04			21.763	16.322
1.300	388000.		0.6090E-04	0.6760E-04	22.355	16.766
		0.7470E-04			22.795	17.096
1.337	388500.		0.8256E-04	0.8255E-04	23.236	17.427
		0.9595E-04			23.820	17.865
1.383	389000.		0.1234E-03	0.1234E-03	24.405	18.304
		0.1559E-03			25.555	19.166
1.461	389500.		.E+00	.E+00	26.706	20.029

TABLE C-9. FATIGUE-CRACK-PROPAGATION DATA FOR 2124-T851 AT R = 0.100

SPECIMEN NO.= AL-1-1-.1 YIELD STRENGTH= 63.20 THICKNESS= 0.500 WIDTH= 6.000
SPECIMEN TYPE=CC, MAXIMUM STRESS OR LOAD= 2.750 STRESS RATIO= 0.100

BASIC DATA A IN.	N CYCLES	DA/DN CALCULATIONS SIMPLE SLOPE(A)	SIMPLE SLOPE(P)	THREE PT. DIV.DIFF.	DAMAGE PARAMETER KMAX	DELTA K
0.479	1876000.		.E+00	.E+00	3.427	3.084
		0.1171E-06			3.642	3.278
0.596	2876000.		0.1354E-06	0.1358E-06	3.857	3.471
		0.1541E-06			4.119	3.707
0.747	3856000.		0.1553E-06	0.1553E-06	4.381	3.943
		0.1564E-06			4.646	4.181
0.904	4856000.		0.2001E-06	0.2003E-06	4.910	4.419
		0.2439E-06			5.327	4.794
1.147	5852000.		0.5756E-06	0.5743E-06	5.744	5.170
		0.9060E-06			7.930	7.137
2.053	6852000.		.E+00	.E+00	10.115	9.104
0.439	1876000.		.E+00	.E+00	3.272	2.945
		0.9830E-07			3.458	3.112
0.537	2876000.		0.1089E-06	0.1090E-06	3.644	3.280
		0.1195E-06			3.853	3.468
0.654	3856000.		0.1284E-06	0.1282E-06	4.062	3.655
		0.1371E-06			4.297	3.867
0.792	4856000.		0.1552E-06	0.1553E-06	4.531	4.078
		0.1733E-06			4.823	4.341
0.964	5852000.		0.2423E-06	0.2420E-06	5.114	4.603
		0.3109E-06			5.561	5.095
1.275	6852000.		0.3143E-06	0.3796E-06	6.209	5.588
		0.3830E-06			6.244	5.620
1.294	6902000.		.E+00	.E+00	6.280	5.652
0.459	1876000.		.E+00	.E+00	3.348	3.013
		0.1090E-06			3.551	3.196
0.567	2876000.		0.7924E-07	0.7864E-07	3.754	3.379
		0.4888E-07			3.840	3.456
0.615	3856000.		0.7778E-07	0.7720E-07	3.925	3.532
		0.1061E-06			4.109	3.698
0.721	4856000.		0.1141E-06	0.1142E-06	4.293	3.864
		0.1222E-06			4.499	4.050
0.843	5852000.		0.1560E-06	0.1559E-06	4.706	4.235
		0.1997E-06			5.027	4.524
1.033	6852000.		0.1858E-06	0.1109E-06	5.348	4.814
		0.1070E-06			5.358	4.822
1.038	6902000.		.E+00	.E+00	5.367	4.830

SPECIMEN NO.= AL-4-1-.1 YIELD STRENGTH= 63.20 THICKNESS= 0.500 WIDTH= 6.000
SPECIMEN TYPE=CC, MAXIMUM STRESS OR LOAD= 3.000 STRESS RATIO= 0.100

0.514	23410000.		.E+00	.E+00	3.881	3.493
		0.1197E-06			4.088	3.679
0.619	24230000.		0.1164E-06	0.1168E-06	4.296	3.866
		0.1135E-06			4.510	4.059
0.733	25230000.		0.1680E-06	0.1680E-06	4.724	4.252
		0.2226E-06			5.135	4.622
0.955	25230000.		0.4243E-06	0.4372E-06	5.546	4.991
		0.6388E-06			6.774	6.096
1.556	27230000.		.E+00	.E+00	8.002	7.202
0.510	23410000.		.E+00	.E+00	3.864	3.478
		0.2864E-07			3.915	3.524
0.535	24290000.		0.3733E-07	0.3581E-07	3.966	3.569
		0.4610E-07			4.057	3.651
0.581	25230000.		0.5915E-07	0.5915E-07	4.148	3.733
		0.7220E-07			4.287	3.859
0.653	25230000.		0.1088E-06	0.1112E-06	4.426	3.984
		0.1478E-06			4.686	4.217
0.792	27230000.		.E+00	.E+00	4.945	4.451

TABLE C-9. (CONTINUED)

BASIC DATA A IN.	N CYCLES	DA/DN CALCULATIONS SIMPLE SLOPE(A)	SIMPLE SLOPE(P)	THREE PT. DIV.DIFF.	DAMAGE PARAMETER KMAX	DELTA K
0.553	23410000.		.E+00	.E+00	4.039	3.635
		0.6506E-07			4.151	3.736
0.611	24230000.		0.9090E-07	0.8780E-07	4.263	3.837
		0.1136E-06			4.479	4.031
0.724	25290000.		0.1739E-06	0.1739E-06	4.694	4.224
		0.2342E-06			5.126	4.613
0.959	26290000.		.E+00	.E+00	5.558	5.002

SPECIMEN NO.= AL-FA-1-.1 YIELD STRENGTH= 63.20 THICKNESS= 0.500 WIDTH= 4.000
SPECIMEN TYPE=CC, MAXIMUM STRESS OR LOAD= 5.500 STRESS RATIO= 0.100

0.341	50000.		.E+00	.E+00	5.797	5.217
		0.9150E-06			5.839	5.255
0.350	60000.		0.8550E-06	0.8550E-06	5.880	5.292
		0.7950E-06			5.916	5.324
0.358	70000.		0.6375E-06	0.6375E-06	5.952	5.357
		0.4800E-06			5.973	5.376
0.367	80000.		0.7425E-06	0.7425E-06	5.995	5.395
		0.1000E-05			6.040	5.436
0.373	90000.		0.5175E-06	0.5175E-06	6.084	5.476
		0.3000E-07			6.086	5.477
0.373	100000.		0.7250E-07	0.7250E-07	6.087	5.478
		0.1150E-06			6.092	5.483
0.375	110000.		0.4175E-06	0.4175E-06	6.097	5.488
		0.7250E-06			6.129	5.516
0.382	120000.		0.1140E-05	0.1140E-05	6.161	5.545
		0.1550E-05			6.229	5.606
0.397	130000.		0.8625E-06	0.8625E-06	6.298	5.668
		0.1050E-06			6.305	5.674
0.399	140000.		0.4275E-06	0.4275E-06	6.312	5.681
		0.6300E-06			6.342	5.708
0.406	150000.		0.6575E-06	0.6575E-06	6.372	5.735
		0.6250E-06			6.399	5.759
0.412	160000.		0.1440E-05	0.1440E-05	6.426	5.784
		0.2255E-05			6.523	5.871
0.435	170000.		0.1847E-05	0.1847E-05	6.620	5.958
		0.1440E-05			6.681	6.013
0.449	180000.		0.1213E-05	0.1213E-05	6.742	6.068
		0.9850E-06			6.784	6.106
0.459	190000.		0.7975E-06	0.7975E-06	6.826	6.143
		0.6100E-06			6.851	6.166
0.465	200000.		0.7775E-06	0.7775E-06	6.877	6.189
		0.6450E-06			6.917	6.225
0.475	210000.		0.1342E-05	0.1342E-05	6.957	6.261
		0.1750E-05			7.029	6.327
0.492	220000.		.E+00	.E+00	7.102	6.392
0.344	50000.		.E+00	.E+00	5.827	5.244
		0.4250E-06			5.846	5.261
0.349	60000.		0.5450E-06	0.5450E-06	5.865	5.279
		0.6650E-06			5.895	5.306
0.355	70000.		0.5475E-06	0.5475E-06	5.925	5.333
		0.4300E-06			5.945	5.350
0.360	80000.		0.9825E-06	0.9825E-06	5.964	5.368
		0.1935E-05			6.032	5.429
0.375	90000.		0.8350E-06	0.8350E-06	6.101	5.491
		0.1750E-06			6.107	5.496
0.376	100000.		0.8700E-06	0.8700E-06	6.113	5.502
		0.1605E-05			6.183	5.565
0.392	110000.		0.1028E-05	0.1028E-05	6.254	5.629
		0.4500E-06			6.274	5.646
0.397	120000.		0.5900E-06	0.5900E-06	6.293	5.664
		0.7700E-06			6.325	5.693
0.404	130000.		0.1215E-05	0.1215E-05	6.357	5.721
		0.1700E-05			6.430	5.787
0.421	140000.		0.1083E-05	0.1083E-05	6.504	5.853
		0.4650E-06			6.524	5.871
0.426	150000.		0.6625E-06	0.6625E-06	6.544	5.889
		0.8650E-06			6.580	5.922
0.434	160000.		0.9400E-06	0.9400E-06	6.617	5.956
		0.1120E-05			6.661	5.995

TABLE C-9. FATIGUE-CRACK-PROPAGATION DATA FOR 2124-T851 AT R = 0.100

SPECIMEN NO.= AL-1-1-.1 YIELD STRENGTH= 63.20 THICKNESS= 0.500 WIDTH= 6.000
SPECIMEN TYPE=CC, MAXIMUM STRESS OR LOAD= 2.750 STRESS RATIO= 0.100

BASIC DATA A IN.	N CYCLES	DA/DN CALCULATIONS SIMPLE SLOPE(A)	SIMPLE SLOPE(P)	THREE PT. DIV.DIFF.	DAMAGE PARAMETER KMAX	DELTA K
0.479	1876000.		.E+00	.E+00	3.427	3.084
		0.1171E-06			3.642	3.278
0.596	2876000.		0.1354E-06	0.1358E-06	3.857	3.471
		0.1541E-06			4.119	3.707
0.747	3856000.		0.1553E-06	0.1553E-06	4.381	3.943
		0.1564E-06			4.646	4.181
0.904	4856000.		0.2001E-06	0.2003E-06	4.910	4.419
		0.2439E-06			5.327	4.794
1.147	5852000.		0.5736E-06	0.5743E-06	5.744	5.170
		0.9060E-06			7.930	7.137
2.053	6852000.		.E+00	.E+00	10.115	9.104
0.439	1876000.		.E+00	.E+00	3.272	2.945
		0.9830E-07			3.458	3.112
0.537	2876000.		0.1088E-06	0.1090E-06	3.644	3.280
		0.1195E-06			3.853	3.468
0.654	3856000.		0.1284E-06	0.1282E-06	4.062	3.655
		0.1371E-06			4.297	3.867
0.792	4856000.		0.1552E-06	0.1553E-06	4.531	4.078
		0.1733E-06			4.823	4.341
0.964	5852000.		0.2423E-06	0.2420E-06	5.114	4.603
		0.3109E-06			5.561	5.095
1.275	6852000.		0.3143E-06	0.3796E-06	6.209	5.588
		0.3830E-06			6.244	5.620
1.294	6902000.		.E+00	.E+00	6.280	5.652
0.459	1876000.		.E+00	.E+00	3.348	3.013
		0.1090E-06			3.551	3.196
0.567	2876000.		0.7924E-07	0.7864E-07	3.754	3.379
		0.4888E-07			3.840	3.455
0.615	3856000.		0.7778E-07	0.7720E-07	3.925	3.532
		0.1061E-06			4.109	3.698
0.721	4856000.		0.1141E-06	0.1142E-06	4.233	3.864
		0.1222E-06			4.499	4.050
0.843	5852000.		0.1560E-06	0.1559E-06	4.706	4.235
		0.1997E-06			5.027	4.524
1.033	6852000.		0.1858E-06	0.1103E-06	5.348	4.814
		0.1070E-06			5.358	4.822
1.039	6902000.		.E+00	.E+00	5.367	4.830

SPECIMEN NO.= AL-4-1-.1 YIELD STRENGTH= 63.20 THICKNESS= 0.500 WIDTH= 6.000
SPECIMEN TYPE=CC, MAXIMUM STRESS OR LOAD= 3.000 STRESS RATIO= 0.100

0.514	23410000.		.E+00	.E+00	3.881	3.493
		0.1197E-06			4.088	3.679
0.619	24290000.		0.1164E-06	0.1168E-06	4.296	3.866
		0.1135E-06			4.510	4.059
0.733	25290000.		0.1680E-06	0.1680E-06	4.724	4.252
		0.2226E-06			5.135	4.622
0.955	25290000.		0.4243E-06	0.4372E-06	5.546	4.991
		0.6388E-06			6.774	6.096
1.556	27230000.		.E+00	.E+00	8.002	7.202
0.510	23410000.		.E+00	.E+00	3.864	3.478
		0.2864E-07			3.915	3.524
0.535	24290000.		0.3733E-07	0.3581E-07	3.966	3.569
		0.4610E-07			4.057	3.651
0.581	25290000.		0.5915E-07	0.5915E-07	4.148	3.733
		0.7220E-07			4.287	3.859
0.653	25290000.		0.1088E-06	0.1112E-06	4.426	3.984
		0.1478E-06			4.686	4.217
0.792	27230000.		.E+00	.E+00	4.945	4.451

TABLE C-9. (CONTINUED)

BASIC DATA A IN.	N CYCLES	DA/DN CALCULATIONS SIMPLE SLOPE(A)	SIMPLE SLOPE(P)	THREE PT. DIV.DIFF.	DAMAGE PARAMETER KMAX	DELTA K
0.553	23410000.		.E+00	.E+00	4.039	3.635
		0.6506E-07			4.151	3.736
0.611	24230000.		0.9090E-07	0.8780E-07	4.263	3.837
		0.1136E-06			4.479	4.031
0.724	25290000.		0.1739E-06	0.1739E-06	4.694	4.224
		0.2342E-06			5.126	4.613
0.959	26290000.		.E+00	.E+00	5.558	5.002

SPECIMEN NO.= AL-5A-1-.1 YIELD STRENGTH= 63.20 THICKNESS= 0.500 WIDTH= 4.000
SPECIMEN TYPE=CC, MAXIMUM STRESS OR LOAD= 5.500 STRESS RATIO= 0.100

0.341	50000.		.E+00	.E+00	5.797	5.217
		0.9150E-06			5.839	5.255
0.350	60000.		0.8550E-06	0.8550E-06	5.880	5.292
		0.7950E-06			5.916	5.324
0.358	70000.		0.6375E-06	0.6375E-06	5.952	5.357
		0.4800E-06			5.973	5.376
0.367	80000.		0.7425E-06	0.7425E-06	5.995	5.395
		0.1000E-05			6.040	5.436
0.373	90000.		0.5175E-06	0.5175E-06	6.084	5.476
		0.7500E-07			6.086	5.477
0.373	100000.		0.7250E-07	0.7250E-07	6.087	5.478
		0.1150E-06			6.092	5.483
0.375	110000.		0.4175E-06	0.4175E-06	6.097	5.488
		0.7250E-06			6.129	5.516
0.382	120000.		0.1140E-05	0.1140E-05	6.161	5.545
		0.1560E-05			6.229	5.606
0.397	130000.		0.8625E-06	0.8625E-06	6.298	5.668
		0.1050E-06			6.305	5.674
0.399	140000.		0.4275E-06	0.4275E-06	6.312	5.681
		0.6300E-06			6.342	5.708
0.406	150000.		0.6575E-06	0.6575E-06	6.372	5.735
		0.6250E-06			6.399	5.759
0.412	160000.		0.1440E-05	0.1440E-05	6.426	5.784
		0.2255E-05			6.523	5.871
0.435	170000.		0.1847E-05	0.1847E-05	6.620	5.958
		0.1440E-05			6.681	6.013
0.449	180000.		0.1213E-05	0.1213E-05	6.742	6.068
		0.9850E-06			6.784	6.106
0.459	190000.		0.7975E-06	0.7975E-06	6.826	6.143
		0.8100E-06			6.851	6.166
0.465	200000.		0.7775E-06	0.7775E-06	6.877	6.189
		0.9450E-06			6.917	6.225
0.475	210000.		0.1342E-05	0.1342E-05	6.957	6.261
		0.1750E-05			7.029	6.327
0.492	220000.		.E+00	.E+00	7.102	6.392
0.344	50000.		.E+00	.E+00	5.827	5.244
		0.4250E-06			5.846	5.261
0.349	60000.		0.5450E-06	0.5450E-06	5.865	5.279
		0.6650E-06			5.895	5.306
0.355	70000.		0.5475E-06	0.5475E-06	5.925	5.333
		0.4300E-06			5.945	5.350
0.360	80000.		0.9825E-06	0.9825E-06	5.964	5.368
		0.1535E-05			6.032	5.429
0.375	90000.		0.8350E-06	0.8350E-06	6.101	5.491
		0.1750E-06			6.107	5.496
0.376	100000.		0.8700E-06	0.8700E-06	6.113	5.502
		0.1605E-05			6.183	5.565
0.392	110000.		0.1028E-05	0.1028E-05	6.254	5.629
		0.4500E-06			6.274	5.646
0.397	120000.		0.5900E-06	0.5900E-06	6.293	5.664
		0.7700E-06			6.325	5.693
0.404	130000.		0.1215E-05	0.1215E-05	6.357	5.721
		0.1700E-05			6.430	5.787
0.421	140000.		0.1083E-05	0.1083E-05	6.504	5.853
		0.4650E-06			6.524	5.871
0.426	150000.		0.6625E-06	0.6625E-06	6.544	5.889
		0.8600E-06			6.586	5.922
0.434	160000.		0.9400E-06	0.9400E-06	6.617	5.956
		0.1020E-05			6.661	5.995

TABLE C-9. (CONTINUED)

BASIC DATA		DA/DN CALCULATIONS			DAMAGE PARAMETER	
A IN.	N CYCLES	SIMPLE SLOPE(A)	SIMPLE SLOPE(P)	THREE PT. DIV.DIFF.	KMAX	DELTA K
0.445	170000.		0.1098E-05	0.1098E-05	6.704	6.034
		0.1170E-05			6.754	6.079
0.456	180000.		0.1220E-05	0.1220E-05	6.804	6.123
		0.1265E-05			6.857	6.171
0.469	190000.		0.9450E-06	0.9450E-06	6.910	6.219
		0.6710E-06			6.937	6.243
0.475	200000.		0.1138E-05	0.1138E-05	6.963	6.267
		0.1450E-05			7.072	6.329
0.492	210000.		0.1055E-05	0.1055E-05	7.101	6.391
		0.4800E-06			7.120	6.408
0.496	220000.		.E+00	.E+00	7.139	6.426
0.347	50000.		.E+00	.E+00	5.851	5.266
		0.7350E-06			5.884	5.296
0.354	60000.		0.6300E-06	0.6300E-06	5.917	5.326
		0.5250E-06			5.941	5.347
0.360	70000.		0.7525E-06	0.7525E-06	5.964	5.368
		0.9800E-06			6.008	5.407
0.370	80000.		0.8750E-06	0.8750E-06	6.052	5.447
		0.7700E-06			6.086	5.478
0.377	90000.		0.6125E-06	0.6125E-06	6.120	5.508
		0.4550E-06			6.140	5.526
0.382	100000.		0.1028E-05	0.1027E-05	6.161	5.544
		0.1600E-05			6.231	5.608
0.398	110000.		0.9550E-06	0.9550E-06	6.301	5.671
		0.7700E-06			6.315	5.684
0.401	120000.		0.4400E-06	0.4400E-06	6.330	5.697
		0.5500E-06			6.357	5.718
0.407	130000.		0.9650E-06	0.9650E-06	6.377	5.740
		0.1380E-05			6.437	5.793
0.420	140000.		0.8900E-06	0.8900E-06	6.498	5.847
		0.7700E-06			6.514	5.862
0.424	150000.		0.7900E-06	0.7900E-06	6.531	5.878
		0.1180E-05			6.581	5.923
0.436	160000.		0.8525E-06	0.8525E-06	6.632	5.969
		0.8200E-06			6.654	5.989
0.441	170000.		0.1170E-05	0.1170E-05	6.678	6.009
		0.1955E-05			6.753	6.078
0.460	180000.		0.1275E-05	0.1275E-05	6.830	6.147
		0.7750E-06			6.861	6.175
0.467	190000.		0.6400E-06	0.6400E-06	6.892	6.203
		0.5125E-06			6.915	6.224
0.472	200000.		0.8975E-06	0.8975E-06	6.938	6.244
		0.1250E-05			6.991	6.291
0.485	210000.		0.1132E-05	0.1132E-05	7.043	6.339
		0.1125E-05			7.088	6.377
0.495	220000.		.E+00	.E+00	7.128	6.415

SPECIMEN NO.= AL-59-1-.1 YIELD STRENGTH= 63.20 THICKNESS= 0.500 WIDTH= 4.000
SPECIMEN TYPE=CC, MAXIMUM STRESS OR LOAD= 7.500 STRESS RATIO= 0.100

0.499	225000.		.E+00	.E+00	9.770	8.793
		0.2480E-05			9.840	8.856
0.512	230000.		0.3030E-05	0.3030E-05	9.910	8.919
		0.3660E-05			10.012	9.011
0.530	235000.		0.4525E-05	0.4525E-05	10.114	9.102
		0.5450E-05			10.267	9.241
0.557	240000.		0.4935E-05	0.4935E-05	10.421	9.379
		0.4800E-05			10.545	9.491
0.579	245000.		0.4550E-05	0.4550E-05	10.670	9.603
		0.4680E-05			10.802	9.721
0.602	250000.		0.4655E-05	0.4655E-05	10.933	9.840
		0.4670E-05			11.064	9.958
0.626	255000.		0.4640E-05	0.4640E-05	11.195	10.075
		0.4450E-05			11.326	10.194
0.649	260000.		0.4435E-05	0.4435E-05	11.458	10.312
		0.4220E-05			11.578	10.420
0.672	265000.		0.5565E-05	0.5565E-05	11.698	10.528
		0.6910E-05			11.895	10.706
0.705	270000.		0.6760E-05	0.6760E-05	12.093	10.884
		0.6910E-05			12.285	11.056

TABLE C-9. (CONTINUED)

BASIC DATA		DA/DN CALCULATIONS			DAMAGE PARAMETER	
A IN.	N CYCLES	SIMPLE SLOPE(A)	SIMPLE SLOPE(P)	THREE PT. DIV.DIFF.	KMAX	DELTA K
0.778	275000.		0.7690E-05	0.7690E-05	12.476	11.228
		0.8770E-05			12.774	11.461
0.781	280000.		0.8920E-05	0.9070E-05	12.992	11.693
		0.9220E-05			13.170	11.817
0.805	282500.		0.8780E-05	0.8780E-05	13.268	11.942
		0.8340E-05			13.395	12.055
0.825	285000.		0.8820E-05	0.8820E-05	13.521	12.169
		0.9700E-05			13.664	12.298
0.849	287500.		0.9880E-05	0.9880E-05	13.807	12.427
		0.1746E-04			13.971	12.574
0.875	290000.		0.1307E-04	0.1307E-04	14.134	12.721
		0.1568E-04			14.386	12.947
0.914	292500.		0.1757E-04	0.1757E-04	14.637	13.173
		0.1146E-04			14.828	13.347
0.943	295000.		0.1334E-04	0.1617E-04	15.015	13.513
		0.1875E-04			15.138	13.622
0.961	296000.		0.1810E-04	0.1810E-04	15.257	13.732
		0.1795E-04			15.380	13.842
0.979	297000.		0.1542E-04	0.1542E-04	15.503	13.953
		0.1390E-04			15.597	14.033
0.991	298000.		0.1618E-04	0.1607E-04	15.682	14.114
		0.1395E-04			15.818	14.236
1.011	299000.		0.2147E-04	0.2143E-04	15.954	14.358
		0.2760E-04			16.124	14.512
1.034	300000.		0.2007E-04	0.2007E-04	16.295	14.665
		0.1655E-04			16.417	14.775
1.051	301000.		0.2137E-04	0.2137E-04	16.539	14.885
		0.2620E-04			16.737	15.063
1.077	302000.		0.2915E-04	0.2915E-04	16.935	15.242
		0.3210E-04			17.186	15.468
1.109	303000.		0.2650E-04	0.1343E-04	17.438	15.694
		0.7833E-05			17.457	15.711
1.112	303300.		.E+00	.E+00	17.476	15.728
0.515	225000.		.E+00	.E+00	9.942	8.948
		0.2860E-05			10.023	9.021
0.529	230000.		0.4020E-05	0.4020E-05	10.104	9.094
		0.5180E-05			10.250	9.225
0.555	235000.		0.4800E-05	0.4800E-05	10.396	9.357
		0.4420E-05			10.521	9.469
0.577	240000.		0.4670E-05	0.4670E-05	10.645	9.581
		0.4920E-05			10.784	9.705
0.602	245000.		0.5000E-05	0.5005E-05	10.922	9.830
		0.5390E-05			11.066	9.959
0.627	250000.		0.5300E-05	0.5300E-05	11.209	10.088
		0.5510E-05			11.365	10.229
0.654	255000.		0.5735E-05	0.5735E-05	11.521	10.369
		0.5980E-05			11.691	10.522
0.684	260000.		0.5990E-05	0.5990E-05	11.861	10.675
		0.6200E-05			12.034	10.830
0.714	265000.		0.7185E-05	0.7185E-05	12.207	10.986
		0.8500E-05			12.450	11.205
0.756	270000.		0.8450E-05	0.8450E-05	12.693	11.424
		0.8500E-05			12.947	11.652
0.799	275000.		0.8800E-05	0.8800E-05	13.201	11.881
		0.9300E-05			13.477	12.129
0.844	280000.		0.8973E-05	0.8897E-05	13.752	12.377
		0.8420E-05			13.890	12.501
0.866	282500.		0.1037E-04	0.1037E-04	14.027	12.624
		0.1192E-04			14.216	12.794
0.896	285000.		0.1293E-04	0.1293E-04	14.405	12.964
		0.1394E-04			14.632	13.169
0.931	287500.		0.1453E-04	0.1453E-04	14.859	13.373
		0.1612E-04			15.112	13.601
0.969	290000.		0.1673E-04	0.1673E-04	15.366	13.830
		0.1874E-04			15.687	14.118
1.014	292500.		0.1897E-04	0.1897E-04	16.007	14.407
		0.1907E-04			16.368	14.731
1.063	295000.		0.2081E-04	0.2264E-04	16.728	15.055
		0.2745E-04			16.911	15.220
1.087	296000.		0.2537E-04	0.2553E-04	17.093	15.384
		0.2700E-04			17.309	15.578

TABLE C-9. (CONTINUED)

BASIC DATA		DA/DN CALCULATIONS			DAMAGE PARAMETER	
A IN.	N CYCLES	SIMPLE SLOPE(A)	SIMPLE SLOPE(P)	THREE PT. DIV.DIFF.	KMAX	DELTA K
1.115	237000.		0.3010E-04	0.3010E-04	17.524	15.771
		0.3210E-04			17.795	16.016
1.148	238000.		0.2885E-04	0.2885E-04	18.067	16.260
		0.2470E-04			18.278	16.450
1.172	239000.		0.2848E-04	0.2848E-04	18.496	16.641
		0.3205E-04			18.777	16.900
1.205	3.0000.		0.4185E-04	0.4185E-04	19.085	17.158
		0.5145E-04			19.555	17.599
1.256	3.1000.		0.5705E-04	0.5705E-04	20.045	18.040
		0.5460E-04			20.614	18.553
1.311	3.2000.		0.7238E-04	0.7238E-04	21.184	19.066
		0.9110E-04			22.284	20.038
1.401	303000.		.E+00	.E+00	23.344	21.009
0.514	225000.		.E+00	.E+00	9.937	8.943
		0.1920E-05			9.991	8.992
0.524	230000.		0.3065E-05	0.3065E-05	10.045	9.041
		0.4210E-05			10.164	9.148
0.545	235000.		0.4045E-05	0.4045E-05	10.283	9.255
		0.3880E-05			10.392	9.353
0.564	240000.		0.3960E-05	0.3960E-05	10.502	9.451
		0.4040E-05			10.615	9.554
0.584	245000.		0.4005E-05	0.4005E-05	10.729	9.656
		0.3970E-05			10.841	9.757
0.604	250000.		0.4085E-05	0.4085E-05	10.953	9.857
		0.4230E-05			11.071	9.964
0.625	255000.		0.4580E-05	0.4580E-05	11.189	10.071
		0.4960E-05			11.330	10.197
0.650	260000.		0.5330E-05	0.5330E-05	11.470	10.323
		0.5700E-05			11.632	10.469
0.678	265000.		0.5945E-05	0.5945E-05	11.794	10.615
		0.6190E-05			11.972	10.775
0.709	270000.		0.6600E-05	0.6600E-05	12.150	10.935
		0.7010E-05			12.353	11.118
0.744	275000.		0.7190E-05	0.7190E-05	12.557	11.301
		0.7730E-05			12.774	11.496
0.781	280000.		0.8120E-05	0.8870E-05	12.991	11.692
		0.9620E-05			13.175	11.822
0.805	282500.		0.9750E-05	0.9750E-05	13.279	11.951
		0.9850E-05			13.429	12.086
0.830	285000.		0.9900E-05	0.9900E-05	13.579	12.241
		0.9930E-05			13.732	12.359
0.855	287500.		0.1070E-04	0.1070E-04	13.886	12.497
		0.1140E-04			14.066	12.659
0.884	290000.		0.1305E-04	0.1305E-04	14.247	12.822
		0.1420E-04			14.482	13.034
0.920	292500.		0.1214E-04	0.1214E-04	14.718	13.246
		0.9660E-05			14.878	13.390
0.944	295000.		0.1140E-04	0.1415E-04	15.037	13.534
		0.1505E-04			15.145	13.630
0.960	296000.		0.1480E-04	0.1482E-04	15.252	13.727
		0.1370E-04			15.345	13.811
0.974	297000.		0.1400E-04	0.1400E-04	15.479	13.895
		0.1400E-04			15.538	13.984
0.989	298000.		0.1397E-04	0.1398E-04	15.637	14.073
		0.1745E-04			15.731	14.158
1.002	299000.		0.1872E-04	0.1872E-04	15.825	14.243
		0.2200E-04			15.997	14.397
1.026	300000.		0.2210E-04	0.2210E-04	16.169	14.552
		0.2080E-04			16.317	14.685
1.046	301000.		0.1675E-04	0.1675E-04	16.465	14.818
		0.1770E-04			16.564	14.907
1.059	302000.		0.1857E-04	0.1857E-04	16.663	14.997
		0.2705E-04			16.845	15.160
1.083	303000.		0.2546E-04	0.2922E-04	17.027	15.324
		0.3783E-04			17.099	15.389
1.092	303300.		.E+00	.E+00	17.171	15.454

TABLE C-10. FATIGUE-CRACK-PROPAGATION DATA FOR 2124-T851 AT R = 0.070

SPECIMEN NO.= AL-4-1-A YIELD STRENGTH= 57.00 THICKNESS= 0.500 WIDTH= 6.000
SPECIMEN TYPE=CC. MAXIMUM STRESS OR LOAD= 2.390 STRESS RATIO= 0.070

BASIC DATA		DA/DN CALCULATIONS			DAMAGE PARAMETER	
A IN.	N CYCLES	SIMPLE SLOPE(A)	SIMPLE SLOPE(P)	THREE PT. DIV.DIFF.	KMAX	DELTA K
0.453	2950000.		.E+00	.E+00	2.892	2.689
		.E+00			2.892	2.689
0.453	2951000.		0.4021E-07	0.4193E-10	2.892	2.689
		0.4025E-07			2.956	2.749
0.492	3910000.		0.5242E-07	0.5193E-07	3.020	2.809
		0.6410E-07			3.123	2.905
0.556	4910000.		.E+00	.E+00	3.226	3.000
0.437	2950000.		.E+00	.E+00	2.837	2.639
		.E+00			2.837	2.639
0.437	2951000.		0.6661E-07	0.6946E-10	2.837	2.639
		0.6668E-07			2.944	2.738
0.501	3910000.		0.6391E-07	0.6402E-07	3.050	2.837
		0.6125E-07			3.148	2.928
0.562	4910000.		.E+00	.E+00	3.246	3.019
0.481	2950000.		.E+00	.E+00	2.985	2.776
		.E+00			2.985	2.776
0.481	2951000.		0.8687E-07	0.9059E-10	2.985	2.776
		0.8697E-07			3.119	2.900
0.564	3910000.		0.7473E-07	0.7523E-07	3.253	3.025
		0.6300E-07			3.350	3.116
0.627	4910000.		.E+00	.E+00	3.448	3.207
0.451	2950000.		.E+00	.E+00	2.884	2.682
		.E+00			2.884	2.682
0.451	2951000.		0.1937E-07	0.2020E-10	2.884	2.682
		0.1940E-07			2.916	2.712
0.470	3910000.		0.2169E-07	0.2160E-07	2.947	2.741
		0.2390E-07			2.986	2.777
0.493	4910000.		.E+00	.E+00	3.026	2.814

REFERENCES

(1) Ruff, P. E., "Determination of Selected MIL-HDBK-5 Design Allowable Properties for Five Aerospace Materials", AFML-TR-75-58, Battelle's Columbus Laboratories, May, 1975.

(2) Item 71-22, "Haynes Alloy No. 188", Status Report (Handout) presented at the 44th MIL-HDBK-5 Meeting, October 1972.

(3) Deel, O. L., and Mindlin, H., "Engineering Data on New Aerospace Structural Materials", AFML-TR-249, Battelle's Columbus Laboratories, December 1971.

(4) Unpublished data from J. W. Tackett, Stellite to R. J. Favor, Battelle, dated March 23, 1972. (MIL-HDBK-5 Source M-101).

(5) Rutkosky, F. A., "Evaluation of Candidate Heat Shield Materials for Shuttle Vehicle", Report LR 7765-4024, Rockwell International Space Division, Spetember 1970. (MIL-HDBK-5 Source M-149).

(6) Stellite Division Technical Bulletin F-30.361B, "Haynes Alloy No. 188".

(7) Unpublished data from J. Tackett, Stellite Division (MIL-HDBK-5 Source M-357).

(8) Item 75-6, "Elevated Temperature Curves for 15-5PH Bar", 49th MIL-HDBK-5 Meeting Handout Proposal, April 1975.

(9) Deel, O. L., and Mindlin, H., "Engineering Data on New Aerospace Structural Materials", AFML-TR-72-196, Volume II, September 1972.

(10) Item 75-22, "Additional Data for Custom 455 Bar", Proposal attached to 51st Meeting Agenda, April 1976.

(11) Item 75-23, "Custom 450 Bar", Proposal attached to 51st Meeting Agenda, April 1976.

(12) "Armco 15-5PH VAC CE Precipitation-Hardening Stainless Steel Bar and Wire", Armco Product Data Bulletin 5-21b (no date).

(13) Item 74-14, "Guidelines for Presentation of Fatigue Crack Propagation Data", Proposal attached to 52nd MIL-HDBK-5 Meeting Agenda, April 1976.

(14) "Damage Tolerant Design Handbook", Battelle MCIC-HB-01.

(15) Feddersen, C. E., and Hyler, W. S., "Fracture and Fatigue-Crack-Propagation Characteristics of 7075-T7351 Aluminum Alloy Sheet and Plate", Battelle Report G-8902 to NADC, March 1970.

(16) Grandt, A. F., and Gallagher, J. P., "Proposed Fracture Mechanics Criteria to Select Mechanical Fasteners for Long Service Lives", ASTM STP 559, 1974.