Report No. CG-D-8-76

(13)

ADA021499

CALM WATER EQUILIBRIUM, DIRECTIONAL STABILITY AND STEADY TURNING CONDITIONS FOR RECREATIONAL PLANING CRAFT

FINAL REPORT

DDC
RECEIVED
FEB 26 1976
C

OCTOBER 1975

Document is available to the public through the National Technical Information Service, Springfield, Virginia 22161

White Section
Buff Section
JUSTIFICATION
BY
DISTRIBUTION/AVAILABILITY CODES
AVAIL. and/or SPECIAL
A

Prepared for

DEPARTMENT OF TRANSPORTATION
UNITED STATES COAST GUARD
Office of Research and Development
Washington, D.C. 20590

C1 - A

Technical Report Documentation Page

1. Report No. USCG-D-8-75	2. Government Accession No.	3. Recipient's Catalog No.
4. Title and Subtitle: Calm Water Equilibrium, Directional Stability and Steady Turning Conditions for Recreational Planing Craft.		5. Report Date: October 1975
		6. Performing Organization Code
7. Author(s): Charles J. Henry		8. Performing Organization Report No. SIT-DL-75-1851
9. Performing Organization Name and Address: Stevens Institute of Technology, Davidson Laboratory, Castle Point Station, Hoboken, N. J. 07030		10. Work Unit No. (TRAIS) CG-75231.4, DL-4201
		11. Contract or Grant No. DOT-CG-43152-A
12. Sponsoring Agency Name and Address: Department of Transportation, United States Coast Guard, Washington, D. C. 20590		13. Type of Report and Period Covered: Final Report
		14. Sponsoring Agency Code: G-DST-2

15. Supplementary Notes

The U. S. Coast Guard Research and Development's technical representative for the work performed herein was W. J. Blanton.

16. Abstract

Measurements of steady, symmetric and non-symmetric planing forces and moments on a series of prismatic hulls are tabulated and discussed. An analytical representation of the forces and moments due to an outboard engine is derived. Curve fits of the data together with the outboard engine representation are used to predict: (a) straight course equilibrium conditions; (b) directional stability of these equilibrium conditions with roll fixed; and (c) steady turning equilibrium conditions. A comparison is made between these calculated results and measured turning diameter of a typical full-scale recreational planing craft.

17. Key Words: Planing Craft, Stability, Control, Recreational, Boats	18. Distribution Statement: This document is available to the public through the National Technical Information Service, Springfield, Virginia 22161.

19. Security Classif. (of this report)	20. Security Classif. (of this page)	21. No. of Pages	22. Price
Unclassified	Unclassified	219	

Form DOT F 1700.7 (8-72) Reproduction of completed page authorized

9 JAN 1976

The work reported herein was accomplished for the U. S. Coast Guard's Office of Research and Development, Marine Safety Technology Division, as part of its program in Recreational Boating Safety.

The contents of this report reflect the views of Stevens Institute of Technology, Hoboken, New Jersey, who are responsible for the facts and the accuracy of the data presented herein. The contents do not necessarily reflect the official views or policy of the Coast Guard. This report does not constitute a standard, specification or regulation.

W. D. MARKLE, JR.
Captain, U. S. Coast Guard
Chief, Marine Safety Technology Division
Office of Research and Development
U. S. Coast Guard Headquarters
Washington, D. C. 20590

C 2

7602232

240

DOT USCG

CALM WATER EQUILIBRIUM, DIRECTIONAL STABILITY AND STEADY TURNING CONDITIONS FOR RECREATIONAL PLANING CRAFT

OCTOBER 1975

240

76C2232

Spine Copy

DAVIDSON LABORATORY

Report SIT-DL-75-1851

October 1975

CALM WATER EQUILIBRIUM, DIRECTIONAL STABILITY AND STEADY TURNING CONDITIONS FOR RECREATIONAL PLANING CRAFT

by Charles J. Henry

Prepared for

Department of Transportation
United States Coast Guard
Office of Research and Development
Under Contract No. DOT-CG-43152-A
DL Project 4209/390

ABSTRACT

Measurements of steady, symmetric and non-symmetric planing forces and moments on a series of prismatic hulls are tabulated and discussed. An analytical representation of the forces and moments due to an outboard engine is derived. Curve fits of the data together with the outboard engine representation are used to predict (a) straight course equilibrium conditions, (b) directional stability of these equilibrium conditions with roll fixed, and (c) steady turning equilibrium conditions. A comparison is made between these calculated results and measured turning diameter of a typical full-scale recreational planing craft.

KEYWORDS

Planing Craft
Marine Craft Design
Hydrodynamics of Planing Surfaces
Stability and Control

TABLE OF CONTENTS

ABSTRACT ii

INTRODUCTION 1

EXPERIMENTAL PROGRAM 3

PROPULSION AND CONTROL SYSTEM 8

ANALYTICAL PROGRAM 10

DISCUSSION OF RESULTS 13

CONCLUSIONS AND RECOMMENDATIONS 18

REFERENCES 21

TABLE 1: Range of Test Parameters. 22

NOMENCLATURE 23

FIGURES

APPENDICES

A Tabulation of Data.

B Empirical Fitting Functions and Transformations.

C Coefficients of Least Squared Fits.

D Propulsion and Control System.

E Applications.

INTRODUCTION

At the present time, safety regulations for recreational planing craft include intact buoyancy and maximum loading requirements based on hydrostatic equilibrium and stability, together with maximum safe horsepower limit based on a formula involving several boat dimensions. These regulations do not take account of dynamic response capability of the boat while underway. The relationship between parameters describing the hull, engine and load and boat dynamics underway can be studied by means of a reliable simulator for recreational planing craft. Once developed, this simulator could be used to study the relationship between boat parameters and the risk of accidents while underway, then with the resultant understanding of dynamic effects, a rational powering safety regulation can be developed. At the same time, the information generated while developing and using this recreational planing craft simulator, can be published in a form which would be of great use to designers.

In order to simulate recreational planing craft, an anlytical representation is required for the various forces and moments acting on the craft. Presently, available planing force formulations for a wide range of Froude No. include only those for steady symmetric chines-wetted planing as described in References 1, 2 and 3. Attempts to extend these formulations to unsteady symmetric planing have not been successful. As an initial step, therefore, the objective of the present study was to extend the planing force formulation to steady, symmetric and non-symmetric planing conditions typical for recreational planing craft and to utilize the resulting empirical formulation to predict some important operational characteristics.

An experimental program was carried out to acquire the hydrodynamic planing force data for steady, symmetric and non-symmetric planing conditions with prismatic models having deadrises of 10, 15 and 20 degrees. The emphasis of the study was on the so-called "chines dry" planing conditions typical for recreational planing craft operation. This contrasts

with the chines wetted planing conditions typical for more heavily loaded commercial and military planing craft, for which extensive data already exist. (For example, Refs. 1 and 2.) The resulting data are tabulated in Appendix A in dimensionless form. To obtain the desired empirical formulation for the hydrodynamic forces, these data were curve fitted using the procedure described herein giving the results presented in Appendices B and C. An analytical representation of the forces and moments applied by an outboard motor was derived as shown in Appendix D. Finally in Appendix E the resulting empirical model of a recreational planing craft was utilized to predict (a) straight course equilibrium conditions, (b) fixed roll directional stability for these equilibrium conditions, and (c) steady turning equilibrium conditions. The straight course equilibrium conditions are tabulated and can be used by recreational craft designers.

The results obtained are discussed herein and recommendations are made for continued effort to achieve the long-term objective of developing a reliable simulator for recreational planing craft.

This work was sponsored by the U.S. Coast Guard under Contract No. DOT-CG-43152-A, Davidson Laboratory Project 4209/390.

EXPERIMENTAL PROGRAM

Previous experimental studies of hydrodynamic forces acting on planing hulls deal with parameter ranges typical of military and commercial craft which are generally much more heavily loaded than recreational planing craft. Furthermore, these studies have concentrated on steady symmetric planing conditions with chines wetted due to the loading. References 1, 2 and 3 are typical examples of previous studies leading to empirical formulations for steady symmetric planing forces with chines wetted. In References 4 and 5, non-symmetrical planing conditions have been considered but the range of speed coefficient and trim angle is much larger than those for recreational planing craft. Many attempts have been presented for describing the unsteady symmetrical planing forces in terms of combined theoretical and empirical results but these derivations have failed to be verified for a significant range of parameters. The measurements reported in Reference 4 show that the two sides of a prismatic planing surface cannot be treated independently as half of an equivalent symmetrical planing surface, so that empirical formulations based on this assumption, such as in Reference 10, do not agree with measurements.

For the long-term objective of the present work, a representation of the hydrodynamic forces is required for non-symmetric and non-steady chines dry planing typical for recreational planing craft. As a first step in fulfilling this requirement, an experimental program has been carried out to extend the definition of the hydrodynamic forces on planing hulls to non-symmetric, steady planing conditions. More precisely, the objective of this experimental program is to define the steady hydrodynamic drag, side and heave forces, and roll, pitch and yaw moments acting on planing hulls as a function of draft, roll, trim, speed, sideslip and turning rate.

Three prismatic models were constructed with deadrises of 10, 15 and 20 degrees, as shown in Figure 1. Bulkheads at the bow and stern and two intermediate locations maintained shape integrity. The chines and hawser

were made sharp to insure separation of flow. The keel was also not rounded or flattened since in cross flows the sharp corner at model scale Reynolds Numbers should be more representative of typical keel sections at full-scale Reynolds Numbers.

Inside the models, a pitch-roll gimbal was mounted with the roll axis as near the keel as possible and with the pitch axis just above the roll axis. A sketch of the support apparatus, including the pitch-roll gimbal, is shown in Figure 1. Roll angles can be set at intervals of 2.5 degrees up to 30 degrees in either direction. Pitch angles can be set at intervals of 1 degree from 0 to 10 degrees up by the bow.

As shown in Figure 1, a force and moment balance is mounted above the pitch-roll gimbal. Before each test phase, the balance was mounted on a calibration setup and five outputs were calibrated, viz., drag and side forces as well as roll, pitch and yaw moments. The balance was mounted on a free-to-heave apparatus which allowed the model-gimbal-balance system to move vertically. Unloading weights pushed up on the free-to-heave apparatus and the amount of these weights was adjusted to give the desired vertical load. The vertical motion of the free-to-heave apparatus was measured in each test to define the draft of the model. The entire apparatus was supported on a yaw adjustment device where the yaw angle was continuously adjustable and could be set accurately by means of a protractor.

Since the balance moved with the model in yaw, but not in pitch and roll, and since the measured moments are referred to the balance center, a transformation is required to obtain forces and moments in hull coordinates from measured forces and moments. The tabulated measured results and the curve fits of the data are in "balance coordinates" which are defined as follows. The longitudinal force axis (X_S) is horizontal, in the centerline plane of the hull at zero roll, and is positive forward. The side force axis (Y_S) is horizontal, normal to the centerline plane of the hull at zero roll and is positive to starboard. The vertical force axis (Z_S) is vertical and is positive down. The roll (K_S), pitch (M_S) and yaw (N_S) moments are moment components about the X_S, Y_S and Z_S axes, respectively, positive in the right-hand sense. The origin of the balance coordinates is at the center of the balance. These axes are shown in

Figure 1.

Tests were conducted on straight course over a range of speed in Davidson Laboratory Tank No.3 and in circular paths for a range of speed and radius in DL Tank No.2. In this way the desired information was generated as measured values of speed, draft, drag and side force and roll, pitch and yaw moment, for set values of vertical load, radius, and roll, trim and sideslip angles.

In setting up the test program, the boat configurations, dimensions, and speeds tabulated in the full-scale test program in Reference 6 were considered representative of the range of parameters for recreational planing craft. Since the objectives of the present study go beyond equilibrium conditions, the range of trim and vertical loads was increased so that a wide range of drafts would be covered. Because of this extended range of load and since recreational craft are lightly loaded to begin with, the range of parameters covered in this study deals predominantly with chines dry planing conditions where the stagnation line intersects the transom. As a result, a few of the heavier load conditions tested here fall in the range of lightly loaded conditions tested previously for commercial and military craft, while the middle to lightly loaded range tested here is not comparable to previous test results or empirical formulations. The test program covered the range of parameters shown in Table 1. Because of the large number of set parameters and the limited resources of this study, it was not possible to conduct a systematic variation of set parameters with adequate coverage. Alternatively, a random selection of combinations of set parameters was derived. In addition, short series of tests were carried out varying only one parameter at a time and one combination of parameters was repeated several times for each hull, at each radius in the circular course tests.

In each run the transducer outputs were integrated over the time required to traverse a preselected test run length and the corresponding time was also measured. Each integrated output was divided by time, the signal level corresponding to zero physical units was subtracted and the results were multiplied by calibration constants to obtain measured results. The test run length divided by measured time gave the speed for

each run. Signal levels corresponding to zero physical units were obtained prior to each run. The resulting data which include air drag have been tabulated in Appendix A in dimensionless form. Measurements of forces and moments acting on the model at various speeds in air were obtained but have not been analyzed or subtracted from corresponding measurements because of their relatively small magnitudes and because prototype craft do indeed experience air drag.

In analyzing the planing data, the six force and moment components: drag, side and vertical force and roll, pitch and yaw moment in balance coordinates. were treated as functions of six parameters: longitudinal and sideslip velocity components in body axes, draft at the transom-keel intersection (measured normal to the water surface), roll, trim and turning rate. This assumed functional relationship was approximated by a Taylor Series expansion up to third order terms. Port and starboard symmetry was assumed and terms not satisfying this requirement were dropped. The resulting expressions for each force and moment component are listed in Appendix B, together with all necessary transformations. The coefficients in the resulting fitting functions were obtained by the least squared error technique for each of the six force and moment components and are listed in Appendix C.

The following procedure was used in applying the least squared error technique to each force or moment component. First, obviously erroneous data points were deleted. Secondly, the least squared error coefficients were calculated. Thirdly, the deviation of every measured point from the resulting fitted expression was calculated as well as the mean deviation and root mean squared deviation of all data points used to obtain the coefficients. Outlying data points were then deleted and steps 2 and 3 were repeated. This procedure was continued until the low order coefficients in the fit and the overall statistics of the fit stabilized. Finally, the resulting expressions were corrected for centrifugal force and moment effects on the experimental apparatus below the balance, as described in Appendix B. The predicted force and moment components using the empirical fit are listed for each data point in Appendix A. Points not included in the final coefficient estimates have been marked with an

asterisk. The forces and moments inaccuracies introduced by transformations would not influence the values of coefficients. If desired, the most practical way to obtain the corresponding empirical fit in hull coordinates would be to generate a hull coordinate data set using the balance coordinate expressions, then fit the hull coordinate data.

PROPULSION AND CONTROL SYSTEM

Recreational planing craft of the type considered in this study are propelled by outboard engines, where directional control is affected by turning the propeller thrust vector relative to the hull and speed control is affected by throttle setting. This propulsive and control system can be characterized by (a) defining the geometric relationship between the thrust direction and the hull, (b) defining the relationship between propeller thrust, torque, inflow speed and rpm, (c) defining the relationship between engine rpm and torque, and (d) defining the relationship between rudder geometry, inflow speed and rudder forces. The relationships used in this study are given in Appendix D.

In defining the relationship between thrust direction and hull coordinates, it was assumed that the propeller thrust acts along the propeller axis and that the side and vertical force components acting on the propeller can be ignored. Previous investitigations have shown that a propeller operating in an inclined flow does develop a force normal to the propeller axis, with magnitude proportional to the angle of flow inclination. But the angle of inclination between the propeller inflow velocity and the propeller axis is quite small for the case of steady planing conditions. Accordingly, the propeller thrust direction is determined geometrically by the location of the tilt pin axis relative to the hull coordinate system, the tilt angle of the motor, the turning axis location, the engine turning angle and the location of the propeller axis. These geometric relationships are described in detail in Appendix D.

The relationship between propeller inflow speed, rpm thrust and torque is assumed to be given by the propeller charts given in Reference 7. The propeller inflow speed is taken as the component along the propeller axis of the velocity relative to still water, of a point on the propeller axis at the center of the propeller. Possible effects of propeller cavitation or ventilation have been ignored in this initial study as well as any hydrodynamic interactions between the propeller, rudder and hull.

The engine torque-rpm relationship was obtained from a least squared error curve fit of measured data supplied by one outboard engine manufacturer for six different models at full throttle. These data and curve fit are shown in Figure 2 in dimensionless form to preserve the propriety of the data.

With these relationships, the propeller rpm for engine-propeller torque equilibrium can be determined, the thrust magnitude for this rpm can then be calculated. Combining this thrust magnitude with the thrust direction given by geometrical relations yields the forces and moments in hull coordinates given in Appendix D for the outboard propeller.

The side force and drag forces on the rudder, which moves with the lower unit of the outboard motor, were evaluated using finite aspect ratio wing theory. The span length used to calculate the aspect ratio was the distance from the ventilation plate to the lower tip of the rudder and the area used was the projected side area of the lower unit below the ventilation plate. Thus, no account was taken of the free water surface which normally is a fraction of an inch above the ventilation plate. At this time, the combined effect of the ventilation plate and the free surface on the rudder force cannot be evaluated or estimated from available data. The rudder angle of attack and relative speed through water were evaluated in a plane normal to the engine turn axis, using the velocity components normal to and parallel to the rudder centerline plane, at the rudder area centroid. The rudder lift and drag were assumed to act normal to the engine turn axis as well as normal to and parallel to the component of the relative fluid velocity normal to the engine turn axis. The rudder drag force includes profile drag and induced drag.

ANALYTICAL PROGRAM

The equations of motion together with various kinematical relationships and transformations as derived for example in Reference 8, form the basis of the mathematical model of a recreational planing craft. To this basis must be added the analytical relationships for the forces and moments acting on the craft. In this study we are concerned with hydrodynamic forces acting on a planing hull due to its steady motion through the water and hydrodynamic forces acting on the lower unit of the outboard engine. The data obtained led to empirical expressions for all hydrodynamic force and moment components acting on the hull for symmetric and non-symmetric steady planing conditions as given in Appendices B and C. In addition, an analytical representation of the hydrodynamic forces acting on the propeller-rudder of the outboard motor has been derived in Appendix D.

With the results obtained in this study, the mathematical model of a recreational planing craft with an outboard motor can be utilized to analyze straight course equilibrium conditions, straight course directional stability with roll fixed, and steady turning equilibrium conditions. The detailed analyses which give these results are derived in Appendix E.

Straight Course Equilibrium

Straight course values of trim and draft for heave force and pitch moment equilibrium were evaluated for a range of values of speed, load and longitudinal and vertical center of gravity positions. In this calculation, the pitch moment due to propeller thrust was ignored but this approximation does not significantly affect the predicted results for no engine tilt. The results listed in Tables E-1 through E-24 can be used to find equilibrium trim and draft of a recreational planing craft as follows: First, find the appropriate table for the deadrise and estimated center of gravity location relative to the keel-transom intersection. Then enter the table at the desired speed and load to find the estimated trim and draft at equilibrium. The corresponding effective horsepower required at this

equilibrium condition has also been calculated. Since this is based on model tests which were not corrected for the difference between model and prototype Reynolds Number, this effective horsepower estimate should be higher than actually required. A sample calculation is carried out in Appendix E.

Straight Course Directional Stability

Also shown in Tables E-1 through E-24 are directional stability roots for small perturbations from each equilibrium condition. A root with positive real part indicates an unstable response while a negative real part is stable. Complex roots mean the predicted response is oscillatory while real roots imply an exponential response. The system considered in this analysis includes sideslip and yaw, while surge, heave, roll and trim are held fixed as are the steering and throttle controls. For the calculation of directional stability indices, ignoring surge, heave and pitch is a good approximation since these motions are not strongly coupled with sideslip, roll and yaw in the linearized system of equations. However, roll motions are coupled with sideslip and yaw motions and this degree of freedom is expected to have an effect on directional stability. The degree of dynamic roll stability may, in fact, be very significant in judging safety. Unfortunately at this time there is no way to estimate the hydrodynamic forces and moments due to roll motion perturbations since these are in the non-steady category which has not yet been treated in any available literature. Additional work in this area is deemed imperative.

The contribution of the rudder to controls-fixed directional stability has been included in Tables E-1 through E-24 but any contribution due to propeller side force has been neglected. The latter assumption should be verified. Added inertia terms were also neglected and this assumption would be verified as part of the recommended program described subsequently.

Steady Turning

Steady turning equilibrium conditions can be calculated from the six equations of motion together with the constraints of zero vertical velocity and propeller-engine torque equilibrium. The hydrodynamic forces on the

hull can be evaluated using the results presented in Appendices B and C while the propeller and rudder forces can be evaluated using the results shown in Appendix D. The detailed analysis of turning equilibrium conditions is described in Appendix E. These equations were also used to calculate straight course equilibrium conditions. The results were found to be in agreement with corresponding results obtained from Tables E-1 through E-24 which show that the contribution of propeller forces to straight course equilibrium conditions can be ignored.

DISCUSSION OF RESULTS

The results obtained in this study include:

1. measured forces and moments for symmetric and non-symmetric steady planing of prismatic hulls over a range of parameters of interest for recreational planing craft;
2. an empirical planing force formulation based on least squared error curve fits of the measured data together with a Taylor Series expansion up to third order terms, with the assumption that the centerline plane of the hull is a plane of symmetry;
3. derivation of the equations describing the propulsion and control characteristics of an outboard motor with attached rudder, assuming engine-propeller torque equilibrium;
4. utilization of the empirical planing force formulation to evaluate straight course equilibrium conditions;
5. utilization of the empirical planing force formulation to evaluate directional stability with fixed roll, at the straight course equilibrium conditions, and
6. utilization of the empirical planing force formulation to evaluate steady turning equilibrium conditions.

The dimensionless, measured forces and moments are described and listed in Appendix A, together with the corresponding attitude and velocity parameters. The empirical planing force formulation as obtained from curve fitting these data is shown in Appendices B and C and the corresponding predicted values are listed together with the data in Appendix A. The overall mean error between the measured values and the corresponding predicted values are listed at the bottom of each table in Appendix A as well as the standard deviation of the error. The mean error is seen to be generally two or more orders of magnitude less than the maximum value of each measured force or moment component while the standard deviation is generally one or more orders of magnitude less than the maximum measured

value. The low value of standard deviation indicates that the fit is relatively good. However, the mean error should in principle be zero and in practice should be several orders of magnitude smaller than the listed values. In addition, a cursory glance at the straight course data, $\omega'=0$ compared with the circular course data, $\omega'\neq 0$, shows that the fitting error appears to be greater generally for the straight course data. On the other hand, the results obtained using the empirical planing force formulation evaluated here, in the three applications discussed below, yield reasonable results and correctly predict expected trends. In view of (a) the mean fitting error, and (b) the apparent difference in fitting error between straight course and circular course data, together with the conflicting evidence, (c) the small value of standard deviation of the fitting error, and (d) correct prediction of trends and reasonable values obtained in the applications, it is suggested that the curve fits obtained in this study are generally correct in describing the trends of the forces and moments due to planing but that some additional data analysis effort may yield an improved formulation which will give even more consistent results.

In describing the forces and moments due to an outboard motor, several assumptions were made which should be verified by experimental measurements. First of all, it was assumed that the side force and vertical force acting on the propeller due to inflow inclination are negligible. This assumption is appropriate for the purposes of this initial investigation since the angle of flow inclination is small for steady planing conditions. However, for the final objective of a recreational planing craft simulator, lateral forces on the propeller should be studied further. For example, the propeller vertical force may contribute to pitch damping, and the side force to roll damping. Secondly, in treating the side force and drag on the rudder, finite aspect ratio wing theory was used here, assuming that the ventilation plate was a wing tip. In reality the ventilation plate and the free water surface, generally a fraction of an inch above the ventilation plate, will have conflicting effects on rudder side force. Finally, no ventilation or cavitation effects are included in the outboard representation used here. Both of these phenomenon can have

significant steady effects and possibly catastrophic transient effects. Accordingly, it is recommended that further study and development are needed to extend the outboard formulation used here to include additional significant effects.

The evaluation of straight course equilibrium conditions using the empirical planing force formulation presented here is described in Appendix E and an extensive tabulation of results is listed in Tables E-1 through E-24. An illustrative design problem is also stated and solved in Appendix E using the tabulated equilibrium conditions. This example shows the potential usefulness of the results of this effort to the recreational planing craft designer. Once a consistent and validated curve fit of these data is obtained, a graphical presentation of corresponding results can be prepared so that the designers can estimate straight course equilibrium conditions quickly and reliably. In fact, the conditions listed here do fairly well in comparison with full-scale measured results presented in Reference 9, and in comparison with corresponding predictions with validated symmetrical planing formulations for the more heavily loaded conditions of this study. Furthermore, the trends of various equilibrium parameters observed in Tables E-1 through E-24 agree with expectations based on previous experience. Consequently, the present results are adequate for engineering estimations of straight course equilibrium conditions.

By considering the response to small perturbations from straight course equilibrium with throttle and steering fixed, the dynamic stability of the equilibrium conditions can be analyzed. For this case, the six motion components can be divided into a pair of three component systems and the cross coupling between the systems usually can be ignored. The pair of three component systems are surge, heave and pitch angle on one hand, and sideslip angle, roll angle and yaw rate, on the other hand. In studying the former system, the well-known phenomenon of porpoising can be investigated, while in the latter system, directional stability can be analyzed. In either case, since transient motions are involved, the forces due to non-steady planing must be available. At the present time, there are no applicable formulations for most of the unsteady force and moment

components. The empirical planing force formulation presented here however does include the effects of sideslip angle and yaw rate but not the effects of non-steady roll motions. With this formulation, the directional stability can be analyzed for the simplified case of fixed roll, i.e., perturbations in roll motion are ignored. The resulting predictions of directional stability indices should show general trends correctly but roll motions are expected to have some influence on directional stability measures. Dynamic roll motion stability may in fact have significant influence on safety. For illustration purposes and to investigate trends, the fixed roll directional stability was analyzed for each of the straight course equilibrium conditions listed in Tables E-1 through E-24. The analysis procedure is described in Appendix E, and the resulting directional stability roots are listed next to each equilibrium condition. The predicted trends of d ectional stability appear reasonable; however, the large number of unstable conditions for 10 and 15 degrees of deadrise does not seem reasonable. It should be noted here that stability conditions are more sensitive to high order terms in the empirical fit than equilibrium conditions, and that these higher order terms would be more sensitive in turn to small inconsistencies in the data set or fitting procedure. Consequently, improvement in stability prediction reliability can be anticipated as the result of the additional data analysis effort suggested previously. Furthermore, additional experimental information is required to extend the empirical planing force formulation to non-steady planing conditions so that the stability of the pair of three component systems listed above can be analyzed. Once a reliable and consistent empirical planing formulation is obtained, the stability margins can be shown in the same graphs or tables as the straight course equilibrium conditions, so that recreational planing craft designers will be able to use the results readily.

The evaluation of steady turning equilibrium conditions is described and illustrated in Appendix E, and the results of a series of calculations are listed in Table E-26. The trends of predicted turning conditions with engine turn angle appear reasonable. It was attempted to compare predicted turning conditions with corresponding full-scale measurements described in Reference 9. However, solutions to the equilibrium equations could not be

obtained for engine turn angles greater than 4 to 5 degrees. Since the numerical procedure used to solve the full set of equations depends on higher order coefficients in the empirical fit, as did stability conditions, small inconsistencies in the data or data fitting procedure could be the source of the problem in obtaining solutions for larger engine turn angles. Consequently, several simplified calculations were carried out to judge whether or not the empirical planing force formulation together with some full-scale measured results gave reasonable turning characteristics. For the 5000 rpm, slow turn described in Reference 9, the sideslip angle required to obtain side force equilibrium was estimated. Using the empirical results for the hull side force and roll moment, together with the measured turning radius and straight course speed, the sideslip angle and roll angle required to obtain side force and roll moment equilibrium were -8 degrees and -7 degrees, respectively. The propeller and rudder forces were estimated using the expressions in Appendix D, together with the measured engine turn angle. Both of these results seem reasonable. (The value of zero degrees roll angle reported in Reference 9 does not seem reasonable for this turn.)

The trend of the predicted turning radius listed in Table E-26, if continued, yields a tighter turn than reported in Ref. 9. Ventilation of the rudder (partial, if not complete) could account for this potential discrepancy. Consequently, the need for a study of outboard ventilation suggested previously, is reinforced. Small waves such as seen in the photograph in Reference 9 could also tend to increase turning radius so that the potential discrepancy, if the trend in predicted turning radius is continued, could be explained by ventilation or waves.

CONCLUSIONS AND RECOMMENDATIONS

Measured forces and moments for symmetric and non-symmetric steady planing conditions for lightly loaded planing surfaces typical of recreational craft were curve fitted to obtain an empirical planing force formulation which was then utilized in three applications. A moderate degree of confidence can be given to this empirical planing force formulation since (a) the standard deviation of the curve fitting error is one or more orders of magnitude less than the maximum force or moment component, (b) all expected trends of predicted values in the applications were obtained, and (c) the values of the predicted straight course equilibrium conditions agree with values predicted by a validated symmetric planing force formulation and with measured full-scale values. On the other hand, the need for additional effort in data analysis to obtain even greater reliability and consistency is indicated by (a) the mean fitting error of two orders of magnitude less than the maximum force or moment component is considered not sufficiently small, and (b) the mean fitting error of the straight course data is different than that of the circular course data.

The empirical planing force formulation for steady planing conditions was utilized to predict straight course equilibrium conditions over a wide range of parameters and the results were tabulated in a useful form for the planing recreational craft designer. These results were found to be in agreement with corresponding full-scale measurements and with corresponding predictions using a validated symmetric planing force formulation.

The empirical planing force formulation for steady planing conditions was used to analyze the directional stability with fixed roll for the straight course equilibrium conditions and the results were tabulated with each condition. The trends of the predicted stability measures are in agreement with expected behavior but, for low deadrise and reasonable longitudinal center of gravity positions, the predicted values of the stability measures seem to be too unstable.

The empirical planing force formulation for steady planing conditions was used to analyze the steady turning equilibrium conditions. The trends of predicted conditions are in agreement with expected behavior. However reasonable solutions to the complicated turning equilibrium equations could be obtained only for engine turn angles up to 4 to 5 degrees. Simplified calculations using elements of the empirical planing force formulation together with results from full-scale measurements gave reasonable results.

Based on these observations and conclusions, it is recommended that continued effort is needed to develop a planing recreational craft simulator which can be used to study safety related problems and which can generate substantial useful design information for these craft. In particular, the following specific programs are recommended:

1) Continued analysis of the available steady, symmetric and non-symmetric data, leading to final expressions for the empirical planing formulation for symmetric and non-symmetric steady planing, together with publication of design charts for predicting straight course equilibrium conditions, directional stability at each condition and steady turning equilibrium conditions.

2) Initiate non-steady planing tests with one degree of freedom to develop equipment and data analysis procedures and to obtain first estimates of some of the non-steady planing force terms such as heave, pitch, and roll velocity dependent forces and moments. Apply results to prediction of directional stability including roll motions and to the prediction of porpoising stability.

3) Continued effort in full-scale verification of predicted results with the development of a reliable instrumentation package which would sense and record essential parameters such as speed, side-slip, angular velocity components, accelerations, rpm and engine turn angle.

4) Measurement of thrust and torque for typical outboard propellers

to verify the use of available propeller charts including cavitation inception.

5) Measurement of forces normal to an outboard propeller shaft due to inclined inflow to the lower unit, together with observations of ventilation inception with particular attention to the relative position of ventilation plate and keel. Also, estimation of the potential significance of hydrodynamic interactions between propeller and rudder, propeller and hull and between the free surface and lower unit of outboard.

With the results of this program, a reliable simulator for planing recreational craft can be developed which can be utilized to make detailed studies of safety related problems, for a wide class of planing recreational craft. The simulator as well as each phase of the recommended program will also generate substantial advancement of the state-of-the-art for the design of planing recreational craft, in the form of detailed design information easily usable by designers.

REFERENCES

1. Savitsky, D., "Hydrodynamic Des gn of Planing Hulls," Davidson Laboratory Report 1000, December 1963.

2. Brown, P.W., "An Experimental and Theoretical Study of Planing Surfaces with Trim Flaps," Davidson Laboratory Report SIT-DL-71-1463, April 1971.

3. Brown, P.W., "An Analysis of the Forces and Moments on Re-Entrant Vee-Step Planing Surfaces," Davidson Laboratory Letter Report 1142, May 1966.

4. Savitsky, D., Prowse, R.E. and Lueders, D.H., "High-Speed Hydrodynamic Characteristics of a Flat Plate and 20° Dead-Rise Surface in Unsymmetrical Planing Conditions," NACA Technical Note 4187, June 1958.

5. Smiley, R.F., "A Theoretical and Experimental Investigation of the Effects of Yaw on Pressures, Forces and Moments During Seaplane Landings and Planing," NACA Technical Note 2817, 1952.

6. White, R.W., Bowman, J.O. and Patrick, S.L., " — Standards Analysis — Powering/Performance Evaluation Using Test Course Methods," Volume I - Research Reports," Preliminary, Wyle Laboratories, March 1974.

7. Gawn, R.W. and Burrill, L.C., "Effects of Cavitation on the Performance of a Series of 16 inch Model Propellers," Transactions, The Institution of Naval Architects, 1957.

8. Strumpf, A., "Equations of Motion of a Submerged Body with Varying Mass," Davidson Laboratory Report 771, May 1960.

9. Smith, B. and Bowman, J., "Performance Tests on 17' Outboard Boat During Various Radius Turns at Different Speeds," Wyle Laboratories, Marine Technology Staff, Technical Brief 75-5, May 1975.

10. Hsu, C.C., "On the Motions of High Speed Planing Craft," Hydronautics, Inc., Technical Report 603-1, May 1967.

TABLE 1

RANGE OF TEST PARAMETERS

Model Beam = 9 inches

	Parameter	Range Minimum	Range Maximum
speed coefficient	C_V	2.	6.
trim angle	θ	2.	6.
load coefficient	C_Δ	0.076	1.22
roll angle	φ	$-1.3\beta_H$	$1.3\beta_H$
drift angle	β_o	-20°	20°
turning rate	ω'	0	0.23

NOMENCLATURE

A_R	aspect ratio of rudder up to ventilation plate
$B_{Xj}, B_{Yj}, B_{Zj}, B_{Kj}, B_{Mj}, B_{Nj}$	least squared error coefficients listed in Appendix C
b_1, b_2, b_3	coefficients defining engine torque in Appendix D
B	beam of hull at chine
BAR	blade area ratio
C_V	speed coefficient $= V/\sqrt{gB}$
C_Δ	load coefficient $= W/\rho g B^3$
$C_{\Delta a}$	load coefficient of model and apparatus effecting centrifugal force at force balance
C_{LR}	rudder lift coefficient
C_{DR}	rudder drag coefficient
C_{DoR}	rudder profile drag coefficient
D_P	propeller diameter
EHP	effective horsepower
f_j, g_j	fitting functions listed in Appendix B
g	gravitational constant
HP_{ER}	rated horsepower of engine
J_P	propeller advance coefficient $= V_{PA}/n_P D_P$
K_T	propeller thrust coefficient $= T_P/\rho n_P^2 D_P^4$
K_Q	propeller torque coefficient $= Q_P/\rho n_P^2 D_P^5$
L_R, R_R	rudder lift force and drag force
n_E	engine speed in revolutions per second
n_{ER}	engine speed at rated power

n_P	propeller speed in revolutions per second
N_{FR}, D_{FR}	rudder normal force and tangential force
p, q, r	rotational velocity components in hull coordinates
Q_E	engine torque
Q_{ER}	engine torque at rated power
R	radius to balance in circular course tests
R_x, R_y, R_z	radii of gyration of vehicle about hull axes
S_R	rudder area
T_P, Q_P	propeller thrust and torque
u, v, w	rectilinear velocity components in hull coordinates
V	steady planing speed
V_{PA}	propeller inflow speed
V_{RA}, V_{RN}	relative fluid velocity components parallel and normal to rudder
W	weight of vehicles
x_a, z_a	coordinates of center of gravity of apparatus effecting centrifugal force at force balance in balance coordinates
x_G, y_G, z_G	coordinates of center of gravity in hull coordinates
x_R, y_R, z_R	coordinates of point of application of rudder forces in hull coordinates
x_{RS}, y_{RS}, z_{RS}	coordinates of balance center in hull coordinates
z_T	draft at transom-keel intersection
X, Y, Z, K, M, N	force and moment components with subscripts denoting the following: G: forces and moments due to gravity in hull coordinates H: forces and moments due to hull planing in hull coordinates P: forces and moments due to propeller in hull coordinates R: forces and moments due to rudder in hull coordinates S: forces and moments due to hull planing in balance coordinates
α	hull angle of attack, between x-axis of hull coordinates and projection of hull velocity in centerline plane.
α_R	rudder angle of attack defined in Appendix D

β	sideslip angle, between hull velocity and hull centerline plane
β_o	drift angle in horizontal plane between projection of hull velocity and projection of x-axis of hull coordinates
β_H	deadrise angle shown in Figure 1
γ_E	gear ratio of engine speed to propeller speed
ζ_o	measured displacement of free-to-heave apparatus
η_E	transmission efficiency
θ	pitch angle
θ_P	tilt angle of outboard
$\xi_R, \zeta_S, \zeta_P, \zeta_R$	dimensions used in transformation from balance coordinates to hull coordinates used in Appendix B
ξ_{RP}, ζ_{RP}	dimensions defining point of application of rudder forces used in Appendix D
ξ_{TA}, ζ_{TA}	dimensions defining point of application of propeller thrust used in Appendix D
ξ_{TP}, ζ_{TP}	dimensions defining location of outboard tilt pin used in Appendix D
ρ	fluid density
φ	roll angle
ψ_P	engine turn angle
ω_E	engine speed in radians per second
ω_{ER}	engine speed at rated power
ω_P	propeller speed in radians per second

<u>Coordinate Systems</u> (See Figure 1)

Balance Coordinates:

x_S	horizontal, in centerline plane of hull at zero roll, positive forward
y_S	horizontal, normal to centerline plane of hull at zero roll, positive to starboard

z_S vertical, normal to calm water surface, positive down

Hull Coordinates:

x_H parallel to baseline, in centerline plane of hull, positive forward

y_H normal to centerline plane, positive to starboard

z_H normal to keel, in centerline plane of hull, positive down

origin at transom-keel intersection

Non-Dimensionalizing Factors:

Quantity:	Dimensions	Divide By:
Length	L	B
Force	F	$\frac{1}{2}\rho g B^3$
Time	T	$\sqrt{g/B}$
Moment or Torque	FL	$\frac{1}{2}\rho g B^4$
Rectilinear speed	L/T	$\sqrt{gB}$
Rotational speed	1/T	$\sqrt{B/g}$
Power	FL/T	$\frac{1}{2}\rho g B^3\sqrt{gB}$

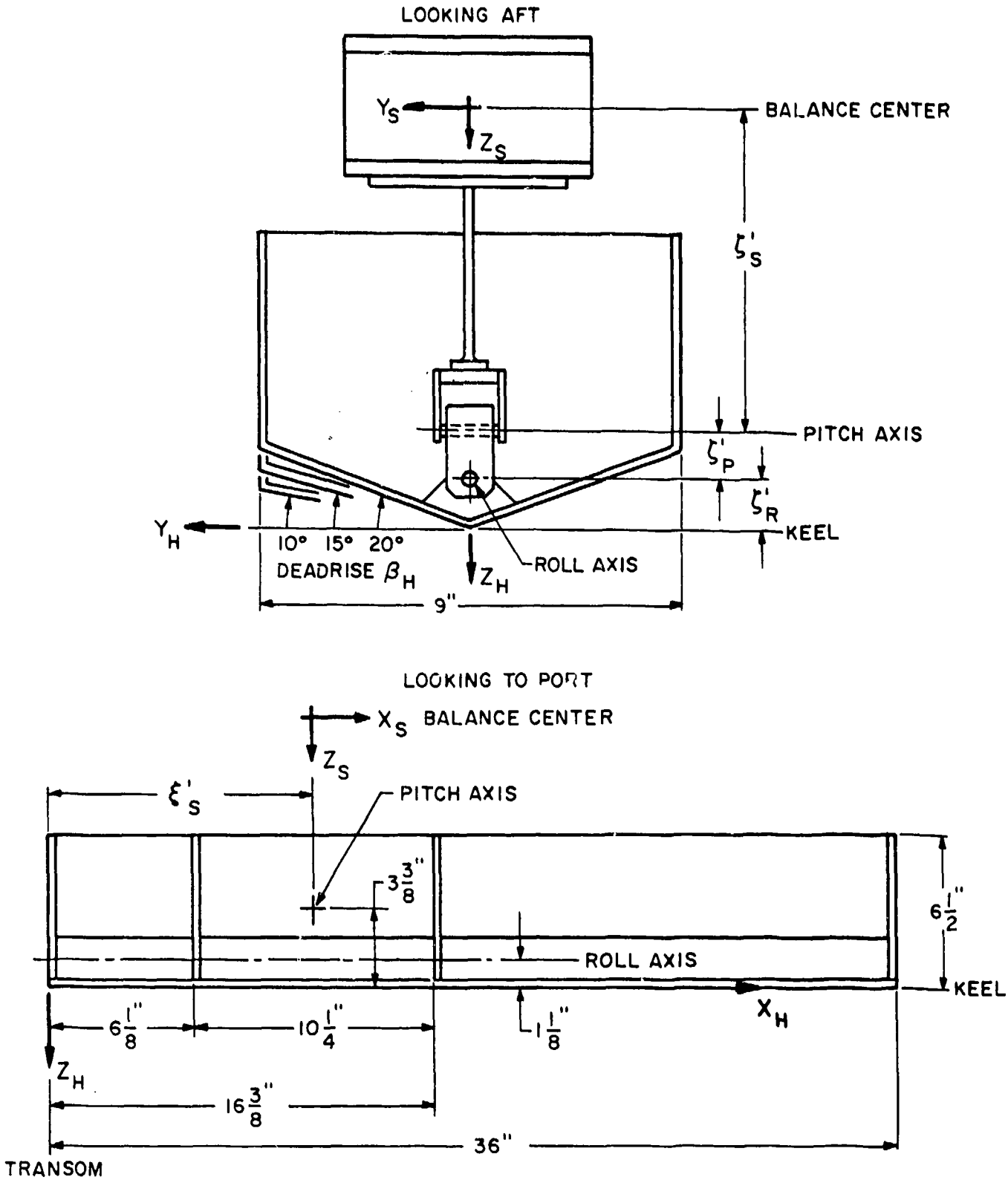

FIG. 1. SCHEMATIC DRAWING OF EXPERIMENTAL SETUP SHOWING BALANCE AXES AND HULL AXES.

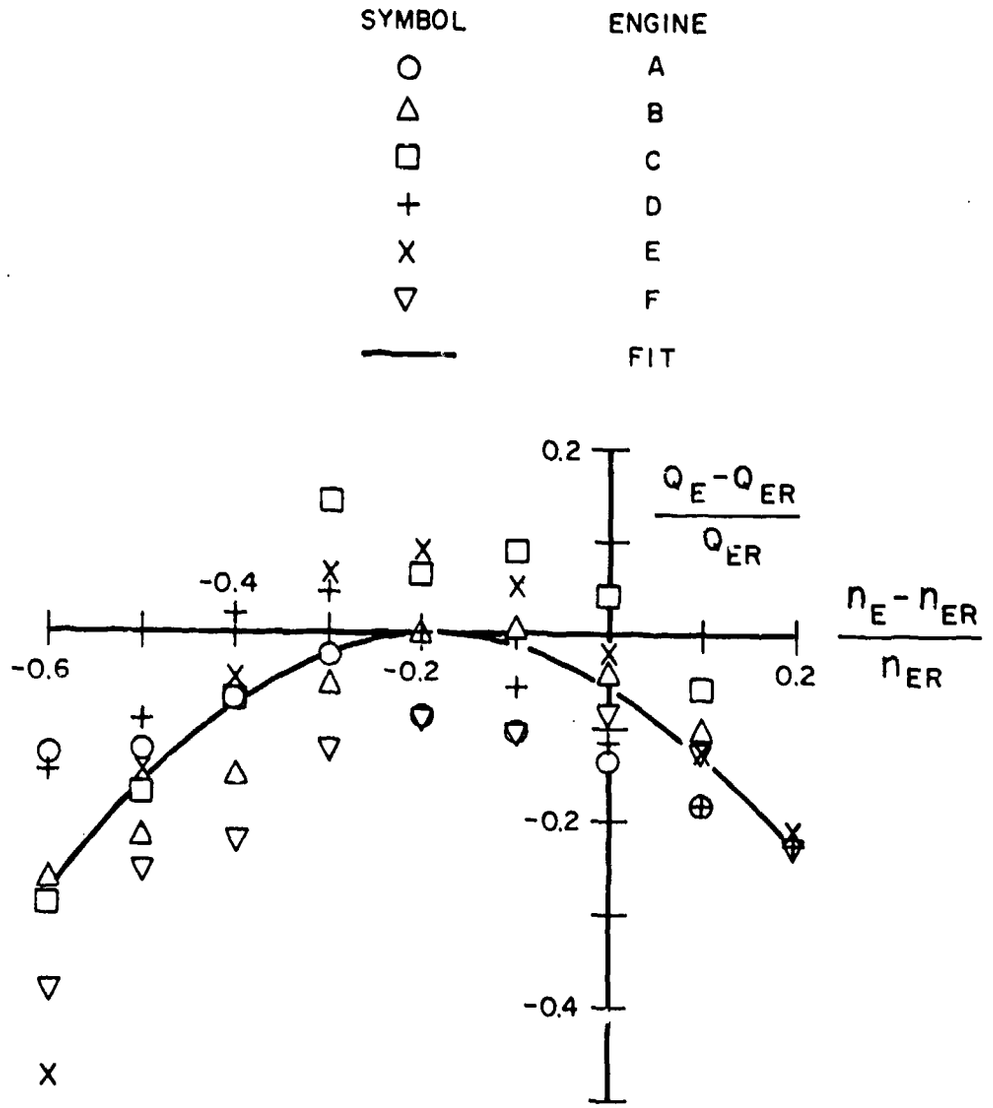

FIG. 2. DIMENSIONLESS TORQUE-RPM RELATION FOR SIX OUTBOARD ENGINES AND FITTED FUNCTION

APPENDIX A

TABULATION OF DATA

The measured forces and moments on three prismatic planing hulls obtained in this study for symmetric and non-symmetric steady planing conditions are tabulated here in dimensionless form. The force and moment components are presented in balance coordinates which can be transformed to hull coordinates using the transformations presented in Appendix B. Each component is tabulated separately for each deadrise and the data for symmetric planing conditions has also been separated from that for the non-symmetric conditions. The drag values are based on model Reynolds number and must be corrected for full-scale Reynolds number when applied to prototype.

Tables A-1 through A-3 give the measured longitudinal force component in balance coordinates in dimensionless form for symmetric, steady planing conditions while Tables A-4 through A-6 list the corresponding vertical force and Tables A-7 through A-9 show the pitch moment. Also shown for each case are the predicted results using the least squared error regression curves described in Appendices B and C. At the bottom of each table the mean error and standard deviation are listed for each predicted column for all data points. It is seen that the standard deviation of the fit is at least two orders of magnitude lower than the maximum value of the force or moment component in each table.

The measured forces and moments for non-symmetric steady planing conditions are listed in Tables A-10 through A-27 for the three deadrise values, together with the corresponding predicted values using the empirical fits described in Appendices B and C. As in the symmetric planing conditions, it is seen that the standard deviation of the error for the all term fit is at least two orders of magnitude lower than the maximum value of the corresponding data points. Again the mean error in the straight course data seems somewhat larger than that for the circular

course data. Consequently, in any continued analysis of these data, it would seem fruitful to analyze the circular course data separately and to look for a small consistent error in the straight course data.

NOMENCLATURE

FOR TABLES A-1 THROUGH A-27

BETA	deadrise angle of hull as shown in Figure 1
CV	dimensionless speed coefficient = $V/\sqrt{gB}$ where, V = resultant horizontal velocity magnitude g = gravitational constant B = beam
PHI	roll angle of hull coordinate system as defined in Reference 8, where the x-axis in this study is taken along the keel line, the y-axis is to starboard and the z-axis downward
PSI	yaw angle of hull coordinates as defined in Reference 8
THETA	pitch angle of hull coordinates as defined in Reference 8
W	dimensionless turning rate about vertical = $\omega\sqrt{B/g}$ where, ω = turning rate about vertical
ZT	dimensionless draft at transom-keel intersection, $ZT=z_T/B$, where, z_T = draft at transom-keel intersection
FORCE COMPONENTS	tabulated in dimensionless form relative to balance coordinates as defined in Appendix B, where the non-dimensionalizing factor is $\frac{1}{2}\rho g B^3$ where, ρ = fluid density
MOMENT COMPONENTS	tabulated in dimensionless form relative to balance coordinates as defined in Appendix B, where the non-dimensionalizing factor is $\frac{1}{2}\rho g B^4$

TABLE A-1

MEASURED, PREDICTED AND FITTED LONGITUDINAL FORCE
BETA=10.DEG

RUN	CV	THETA	ZT	MEASURED	FITTED
2	4.00	2.60	.048	-0.0467	-0.0606
14	4.00	1.60	.062	-0.0798	-0.1032
15	4.00	3.70	.039	-0.0401	-0.0488
16	4.00	4.70	.036	-0.0391	-0.0534
17	4.00	5.70	.032	-0.0426	-0.0552
18	4.00	2.60	.038	-0.0349	-0.0480
19	4.00	2.60	.061	-0.0617	-0.0790
21	4.00	1.60	.048	-0.0648	-0.0817
23	4.00	1.60	.049	-0.0617	-0.0833
25	4.00	2.70	.101	-0.1244	-0.1354
26	4.00	2.70	.159	-0.1989	-0.2252
27	4.00	2.70	.170	-0.2117	-0.2430*
29	2.00	2.60	.083	-0.0227	-0.0403*
30	3.00	2.60	.057	-0.0263	-0.0490*
31	5.00	2.60	.040	-0.0562	-0.0719
32	6.00	2.60	.035	-0.0778	-0.0848

MEAN ERROR= 0.0171
STANDARD DEVIATION= 0.0063

TABLE A-2

MEASURED, PREDICTED AND FITTED LONGITUDINAL FORCE
BETA=15.DEG

RUN	CV	THETA	ZT	MEASURED	FITTED
142	4.00	2.60	.063	-0.0587	-0.0756
147	4.00	3.60	.058	-0.0473	-0.0582
148	4.00	3.60	.061	-0.0509	-0.0618
149	4.00	3.60	.076	-0.0687	-0.0810
150	4.00	3.60	.113	-0.1192	-0.1292
151	4.00	3.60	.163	-0.1795	-0.1979
152	4.00	3.70	.216	-0.2389	-0.2719*
154	3.00	3.60	.077	-0.0339	-0.0534
155	5.00	3.60	.051	-0.0690	-0.0805
156	6.00	3.60	.043	-0.0919	-0.1077
163	4.00	4.60	.058	-0.0406	-0.05[illegible]5
164	4.00	5.60	.056	-0.0390	-0.05[illegible]8
173	4.00	6.60	.055	-0.0433	-0.0534
				MEAN ERROR=	0.0157
				STANDARD DEVIATION=	0.0060

TABLE A-3

MEASURED, PREDICTED AND FITTED LØNGITUDINAL FØRCE
BETA=20.DEG

RUN	CV	THETA	ZT	MEASURED	FITTED
319	4.00	3.60	.095	-0.0737	-0.0923
320	2.00	3.60	.152	-0.0311	-0.0402
321	2.00	3.70	.151	-0.0280	-0.0403
322	3.00	3.60	.113	-0.0462	-0.0732*
323	5.00	3.60	.076	-0.0935	-0.1040
324	6.00	3.70	.067	-0.1235	-0.1616
325	4.00	3.60	.075	-0.0499	-0.0640
333	4.00	3.60	.153	-0.1550	-0.1721
335	5.00	3.60	.183	-0.3089	-0.3433
336	4.00	3.60	.200	-0.2146	-0.2425
338	4.00	4.60	.076	-0.0504	-0.0640
339	4.00	2.60	.105	-0.0999	-0.1272
347	6.00	5.60	.059	-0.0996	-0.1679*
348	4.00	5.60	.074	-0.0479	-0.0680
350	4.00	6.70	.068	-0.0448	-0.0705*

MEAN ERRØR= 0.0243
STANDARD DEVIATIØN= 0.0145

TABLE A-4

MEASURED, PREDICTED AND FITTED VERTICAL FORCE
BETA=10.DEG

RUN	CV	THETA	ZT	MEASURED	FITTED
2	4.00	2.60	.048	-0.1521	-0.1998
14	4.00	1.60	.062	-0.1521	-0.2933*
15	4.00	3.70	.039	-0.1521	-0.1775
16	4.00	4.70	.036	-0.1521	-0.2062
17	4.00	5.70	.032	-0.1521	-0.2206
18	4.00	2.60	.038	-0.0761	-0.1290*
19	4.00	2.60	.061	-0.3042	-0.2989
21	4.00	1.60	.048	-0.1521	-0.1966
23	4.00	1.60	.049	-0.1521	-0.2039
25	4.00	2.70	.101	-0.6085	-0.5957
26	4.00	2.70	.159	-0.9127	-1.0103
27	4.00	2.70	.170	-0.9127	-1.0881
29	2.00	2.60	.083	-0.1521	-0.1828
30	3.00	2.60	.057	-0.1521	-0.1772
31	5.00	2.60	.040	-0.1521	-0.1649
32	6.00	2.60	.035	-0.1521	-0.0208*

MEAN ERROR= 0.0424
STANDARD DEVIATION= 0.0655

TABLE A-5

MEASURED, PREDICTED AND FITTED VERTICAL FORCE
BETA=15.DEG

RUN	CV	THETA	ZT	MEASURED	FITTED
142	4.00	2.60	.063	-0.1521	-0.1698
147	4.00	3.60	.058	-0.1521	-0.1790 *
148	4.00	3.60	.061	-0.0761	-0.2024
149	4.00	3.60	.076	-0.3042	-0.3231
150	4.00	3.60	.113	-0.6085	-0.6053
151	4.00	3.60	.163	-0.9127	-0.9544
152	4.00	3.70	.216	-1.2169	-1.2799
154	3.00	3.60	.077	-0.1521	-0.1725
155	5.00	3.60	.051	-0.1521	-0.2136
156	6.00	3.60	.043	-0.1521	-0.1281 *
163	4.00	4.60	.058	-0.1521	-0.2529 *
164	4.00	5.60	.056	-0.1521	-0.2887 *
173	4.00	6.60	.055	-0.1521	-0.2722

MEAN ERROR= 0.0544
STANDARD DEVIATION= 0.0501

TABLE A-6

MEASURED, PREDICTED AND FITTED VERTICAL FORCE
BETA=20.DEG

RUN	CV	THETA	ZT	MEASURED	FITTED
319	4.00	3.60	.095	-0.1521	-0.3053 *
320	2.00	3.60	.152	-0.1521	-0.3040 *
321	2.00	3.70	.151	-0.1521	-0.2996 *
322	3.00	3.60	.113	-0.1521	-0.2840 *
323	5.00	3.60	.076	-0.1521	-0.2273
324	6.00	3.70	.067	-0.1521	-0.1538
325	4.00	3.60	.075	-0.0761	-0.1771 *
333	4.00	3.60	.153	-0.6085	-0.6759
335	5.00	3.60	.183	-1.2169	-1.1882
336	4.00	3.60	.200	-0.9127	-0.9954
338	4.00	4.60	.076	-0.1521	-0.2413
339	4.00	2.60	.105	-0.1521	-0.3397 *
347	6.00	5.60	.059	-0.1521	-0.2080
348	4.00	5.60	.074	-0.1521	-0.2721 *
350	4.00	6.70	.068	-0.1521	-0.2218

MEAN ERROR= 0.0937
STANDARD DEVIATION= 0.0562

TABLE A-7

MEASURED, PREDICTED AND FITTED PITCH MØMENT
BETA=10.DEG

RUN	CV	THETA	ZT	MEASURED	FITTED
2	4.00	2.60	.048	-0.2439	-0.2394
14	4.00	1.60	.062	-0.2254	-0.1629
15	4.00	3.70	.039	-0.2498	-0.2620
16	4.00	4.70	.036	-0.2435	-0.2927
17	4.00	5.70	.032	-0.2837	-0.3153
18	4.00	2.60	.038	-0.1627	-0.2195
19	4.00	2.60	.061	-0.3384	-0.2465
21	4.00	1.60	.048	-0.2046	-0.2023
23	4.00	1.60	.049	-0.1993	-0.2001
25	4.00	2.70	.101	-0.2975	-0.1673*
26	4.00	2.70	.159	0.2296	0.2462
27	4.00	2.70	.170	0.4182	0.3650
29	2.00	2.60	.083	-0.1180	-0.1272
30	3.00	2.60	.057	-0.1630	-0.1884
31	5.00	2.60	.040	-0.2229	-0.2650
32	6.00	2.60	.035	-0.2685	-0.2528

MEAN ERRØR= -0.0027
STANDARD DEVIATION= 0.0511

TABLE A-8

MEASURED, PREDICTED AND FITTED PITCH MØMENT
BETA=15.DEG

RUN	CV	THETA	ZT	MEASURED	FITTED
142	4.00	2.60	.063	-0.2333	-0.2144
147	4.00	3.60	.058	-0.2427	-0.2394
148	4.00	3.60	.061	-0.2606	-0.2532
149	4.00	3.60	.076	-0.3703	-0.3103
150	4.00	3.60	.113	-0.5111	-0.3460*
151	4.00	3.60	.163	-0.2391	-0.1712
152	4.00	3.70	.216	0.2710	0.2327
154	3.00	3.60	.077	-0.2191	-0.2413
155	5.00	3.60	.051	-0.2955	-0.2666
156	6.00	3.60	.043	-0.3104	-0.2827
163	4.00	4.60	.058	-0.2492	-0.2914
164	4.00	5.60	.056	-0.2556	-0.3328
173	4.00	6.60	.055	-0.3114	-0.3786

MEAN ERRØR= -0.0102
STANDARD DEVIATION= 0.0622

TABLE A-9

MEASURED, PREDICTED AND FITTED PITCH MOMENT
BETA=20. DEG

RUN	CV	THETA	ZT	MEASURED	FITTED
319	4.00	3.60	.095	-0.2806	-0.2976
320	2.00	3.60	.152	-0.1396	-0.1538
321	2.00	3.70	.151	-0.1373	-0.1586
322	3.00	3.60	.113	-0.2152	-0.2416
323	5.00	3.60	.076	-0.3135	-0.3191
324	6.00	3.70	.067	-0.3472	-0.3906
325	4.00	3.60	.075	-0.2036	-0.2346
333	4.00	3.60	.153	-0.4382	-0.2913*
335	5.00	3.60	.183	-0.4429	-0.2281*
336	4.00	3.60	.200	-0.1856	-0.1087
338	4.00	4.60	.076	-0.2521	-0.3055
339	4.00	2.60	.105	-0.2620	-0.2471
347	6.00	5.60	.059	-0.3525	-0.5026*
348	4.00	5.60	.074	-0.2633	-0.3475
350	4.00	6.70	.068	-0.2803	-0.3120

MEAN ERROR= 0.0017
STANDARD DEVIATION= 0.0863

TABLE A-10

MEASURED AND FITTED LONGITUDINAL FORCE
BETA=10.DEG

RUN	CV	W	PHI	THETA	PSI	ZT	MEASURED	FITTED
3	4.00	.000	2.1	2.60	0.0	.043	-0.0468	-0.0557
5	4.00	.000	4.6	2.50	0.0	.035	-0.0451	-0.0493
6	4.00	.000	7.2	2.60	0.0	.139	-0.1943	-0.2092
7	4.00	.000	9.7	2.50	0.0	.020	-0.0503	-0.0440
8	4.00	.000	12.2	2.40	0.0	.011	-0.0503	-0.0444
1	4.00	.000	4.7	2.50	5.0	.028	-0.0433	-0.0411
9	4.00	.000	0.0	2.60	-5.0	.046	-0.0478	-0.0590
10	4.00	.000	0.0	2.60	5.0	.046	-0.0465	-0.0593
11	4.00	.000	0.0	2.60	10.0	.048	-0.0461	-0.0638
12	4.00	.000	0.1	2.60	15.0	.047	-0.0461	-0.0680
13	4.00	.000	0.1	2.60	20.0	.046	-0.0435	-0.0726*
24	4.00	.000	5.1	2.80	0.0	.039	-0.0364	-0.0533
34	5.00	.000	2.4	2.40	-5.0	.076	-0.1521	-0.1595
36	2.00	.000	7.4	5.50	-5.0	.287	-0.1350	-0.1451
37	3.00	.000	5.0	4.50	20.0	.058	-0.0387	-0.0749*
40	4.00	.000	12.4	4.50	20.0	.007	-0.0447	-0.0864*
41	3.00	.000	5.0	4.50	20.0	.031	-0.0109	-0.0668*
42	2.00	.000	10.0	4.50	20.0	.079	-0.0274	-0.0492*
43	2.00	.000	10.0	4.50	20.0	.056	-0.0176	-0.0487*
44	5.00	.000	7.4	4.50	20.0	.019	-0.0408	-0.0901*
45	2.00	.000	12.4	4.50	20.0	.124	-0.0633	-0.0598
46	3.00	.000	10.0	3.50	20.0	.110	-0.1100	-0.0997
47	4.00	.000	10.0	2.50	20.0	.042	-0.0652	-0.0784
48	4.00	.000	0.1	6.50	20.0	.111	-0.1873	-0.1810
49	6.00	.000	9.9	2.40	20.0	.034	-0.1282	-0.1254
50	4.00	.000	4.9	5.60	20.0	.243	-0.2839	-0.3011
51	3.00	.000	0.0	5.50	20.0	.059	-0.0413	-0.0756*
52	4.00	.000	7.5	2.50	20.0	.056	-0.0834	-0.0892
53	4.00	.000	2.4	3.50	20.0	.112	-0.1437	-0.1501
54	3.00	.000	2.5	5.50	20.0	.033	-0.0133	-0.0708*
55	5.00	.000	0.1	6.50	10.0	.045	-0.1107	-0.1118
56	2.00	.000	10.0	4.60	10.0	.030	-0.0087	-0.0436*
57	4.00	.000	5.0	2.50	10.0	.036	-0.0369	-0.0533
58	3.00	.000	12.5	6.50	10.0	-.005	-0.0112	-0.0429*
59	4.00	.000	2.5	3.60	5.0	.040	-0.0377	-0.0517
60	4.00	.000	2.5	3.60	5.0	.029	-0.0276	-0.0401
61	4.00	.000	5.1	3.50	5.0	.043	-0.0496	-0.0591
62	3.00	.000	0.0	2.50	5.0	.054	-0.0314	-0.0487*
63	5.00	.000	2.5	2.50	5.0	.035	-0.0534	-0.0631
64	3.00	.000	9.9	2.60	5.0	.013	-0.0148	-0.0341*
65	4.00	.000	5.0	2.60	5.0	.039	-0.0383	-0.0545
66	5.00	.000	5.0	6.60	5.0	.022	-0.0538	-0.0616
67	3.00	.000	9.9	6.60	5.0	.020	-0.0287	-0.0417
68	6.00	.000	12.4	5.70	5.0	-.006	-0.0517	-0.0551
69	3.00	.000	-5.1	6.60	5.0	.240	-0.2094	-0.2063
70	6.00	.000	-5.1	5.70	5.0	.016	-0.0547	-0.0577
71	6.00	.000	7.4	5.60	5.0	.012	-0.0609	-0.0619
72	4.00	.000	12.4	5.60	5.0	.102	-0.1933	-0.1927
73	2.00	.000	0.0	5.60	5.0	.060	-0.0111	-0.0513*
74	4.00	.000	2.4	3.60	5.0	.041	-0.0389	-0.0527

TABLE A-10 (cont'd)

MEASURED AND FITTED LONGITUDINAL FORCE
BETA=10.DEG

RUN	CV	W	PHI	THETA	PSI	ZT	MEASURED	FITTED
76	5.00	.000	2.4	5.60	0.0	.026	-0.0493	-0.0599
77	2.00	.000	4.9	5.70	0.0	.329	-0.1625	-0.1474
78	6.00	.000	7.5	5.70	0.0	.015	-0.0683	-0.0680
79	3.00	.000	12.4	5.60	0.0	.112	-0.1045	-0.1133
80	3.00	.000	12.4	5.60	0.0	.247	-0.2218	-0.2174
81	4.00	.000	12.4	4.60	0.0	.117	-0.1813	-0.1934
82	4.00	.000	4.9	6.60	0.0	.099	-0.1751	-0.1590
83	3.00	.000	-5.1	6.60	0.0	.049	-0.0489	-0.0544*
84	3.00	.000	2.4	2.60	0.0	.044	-0.0211	-0.0422
85	4.00	.000	7.4	2.60	-5.0	.026	-0.0417	-0.0457
87	2.00	.000	4.9	2.60	-5.0	.135	-0.0525	-0.0625
88	4.00	.000	4.9	2.60	-5.0	.061	-0.0729	-0.0843
89	2.00	.000	7.4	5.70	-5.0	.285	-0.1344	-0.1463
90	6.00	.000	7.5	6.70	-5.0	.014	-0.0789	-0.0649*
91	2.00	.000	0.0	4.60	-5.0	.119	-0.0305	-0.0581
92	5.00	.000	0.0	3.60	-5.0	.037	-0.0569	-0.0641
93	6.00	.000	9.9	3.50	-5.0	.110	-0.3830	-0.3781
94	6.00	.000	9.9	4.60	-5.0	.078	-0.2927	-0.2839
95	6.00	.000	10.0	5.60	-5.0	.002	-0.0703	-0.0490
97	4.00	.000	9.9	5.60	-5.0	.037	-0.0563	-0.0751
98	5.00	.000	9.9	5.50	-5.0	.097	-0.2577	-0.2456
99	3.00	.000	0.1	6.60	-5.0	.142	-0.1275	-0.1408
100	4.00	.000	4.9	6.60	-5.0	.034	-0.0621	-0.0564
101	4.00	.000	2.4	3.50	5.0	.039	-0.0396	-0.0505
102	6.00	.000	9.9	2.50	0.0	.105	-0.3777	-0.3763
103	3.00	.000	-5.1	2.50	10.0	.122	-0.0942	-0.1054
105	5.00	.000	10.0	3.50	10.0	.013	-0.0595	-0.0523
106	4.00	.000	5.0	3.50	10.0	.045	-0.0460	-0.0644
107	3.00	.000	7.4	6.50	10.0	.158	-0.1643	-0.1717*
108	4.00	.000	12.5	6.60	10.0	****	-0.0256	-0.0508*
109	2.00	.000	-5.1	6.60	10.0	.057	-0.0141	-0.0347*
110	3.00	.000	2.4	6.50	10.0	.077	-0.0740	-0.0855
111	3.00	.000	-5.1	5.60	10.0	.135	-0.1039	-0.1194*
112	3.00	.000	12.5	5.60	10.0	.006	-0.0211	-0.0565*
113	4.00	.000	2.4	3.60	5.0	.038	-0.0306	-0.0496*
114	4.00	.000	0.0	3.50	15.0	.042	-0.0297	-0.0612*
115	4.00	.000	12.5	3.60	15.0	.001	-0.0352	-0.0517
116	3.00	.000	7.4	2.60	15.0	.139	-0.1301	-0.1253*
117	4.00	.000	7.4	2.50	15.0	.030	-0.0348	-0.0550
118	3.00	.000	5.0	2.50	15.0	.067	-0.0427	-0.0609*
119	3.00	.000	2.4	2.50	15.0	.057	-0.0269	-0.0549*
120	6.00	.000	2.4	2.50	15.0	.069	-0.1990	-0.2007
121	3.00	.000	0.0	2.60	15.0	.172	-0.1502	-0.1569
126	6.00	.000	4.9	2.50	20.0	.065	-0.1804	-0.1948
127	4.00	.000	5.0	2.60	20.0	.137	-0.2151	-0.1938
128	6.00	.000	12.5	5.50	20.0	.022	-0.1997	-0.1939
129	2.00	.000	12.5	6.60	0.0	.057	-0.0214	-0.0198
130	5.00	.000	6.6	****	7.5	****	-0.0497	-0.0436
131	6.00	.000	-5.0	6.70	0.0	.022	-0.0732	-0.0791
132	3.00	.000	9.9	3.60	0.0	.148	-0.1208	-0.1244

TABLE A-10 (cont'd)

MEASURED AND FITTED LØNGITUDINAL FØRCE
BETA=10.DEG

RUN	CV	W	PHI	THETA	PSI	ZT	MEASURED	FITTED
133	4.00	.000	7.4	3.60	5.0	.145	-0.1923	-0.2048
134	3.00	.000	9.9	3.70	5.0	.224	-0.1872	-0.1992
135	4.00	.000	2.4	3.60	5.0	.040	-0.0339	-0.0515*
138	4.00	.000	-5.0	5.60	20.0	.221	-0.2709	-0.2631
139	4.00	.000	-5.1	3.60	5.0	.044	-0.0500	-0.0590
1	1.97	.049	0.0	3.00	0.0	.057	-0.0352	-0.0340
2	1.98	.050	0.0	3.00	0.0	.058	-0.0341	-0.0340
3	3.15	.079	0.0	3.00	0.0	.029	-0.0466	-0.0335
4	4.01	.100	0.0	3.00	0.0	.022	-0.0719	-0.0317*
6	5.30	.133	0.0	3.00	0.0	.033	-0.0816	-0.0817
8	6.00	.150	0.0	3.00	0.0	.032	-0.1475	-0.1119
10	3.01	.075	-2.5	3.00	0.0	.042	-0.0487	-0.0402
9	3.12	.078	5.0	3.00	0.0	.038	-0.0501	-0.0324
11	3.02	.076	-5.0	3.00	0.0	.037	-0.0508	-0.0409
12	2.95	.074	-7.5	3.00	0.0	.033	-0.0408	-0.0404
13	2.98	.075	-10.0	3.00	0.0	.032	-0.0526	-0.0427
14	2.96	.074	-12.5	3.00	0.0	.026	-0.0531	-0.0411
15	2.95	.074	0.0	2.00	0.0	.064	-0.0703	-0.0599
16	2.99	.075	0.0	4.00	0.0	.047	-0.0444	-0.0430
19	2.72	.068	0.0	5.00	0.0	.041	-0.0469	-0.0463
20	2.68	.067	0.0	5.00	0.0	.041	-0.0472	-0.0463
21	3.14	.079	0.0	6.00	0.0	.033	-0.0582	-0.0460
22	2.01	.050	-7.5	6.00	0.0	.089	-0.0552	-0.0484
23	2.98	.074	0.0	3.00	0.0	.025	-0.0359	-0.0327
24	2.97	.074	0.0	3.00	0.0	.072	-0.0722	-0.0525
25	2.46	.062	0.0	3.00	0.0	.151	-0.1103	-0.0921
26	3.46	.087	0.0	3.00	0.0	.103	-0.1418	-0.1026
27	2.96	.074	0.0	3.00	0.0	.127	-0.1197	-0.0982
28	2.93	.073	0.0	3.00	0.0	.181	-0.1726	-0.1516
30	4.49	.112	0.0	3.00	0.0	.193	-0.1951	-0.3340*
31	5.03	.126	0.0	3.00	0.0	.115	-0.2893	-0.2562
32	3.15	.079	0.0	3.00	-5.0	.055	-0.1050	-0.1048
34	3.07	.077	-2.5	3.00	-5.0	.054	-0.0995	-0.1028
35	5.82	.146	0.0	3.00	-5.0	.049	-0.3385	-0.3480
36	5.77	.144	-12.5	6.00	-5.0	.008	-0.3244	-0.3281
37	4.91	.123	5.0	2.00	-5.0	.040	-0.2172	-0.2331
38	2.87	.072	-10.0	4.00	-5.0	.157	-0.1950	-0.1855
39	5.96	.149	-12.5	5.00	-5.0	.045	-0.4551	-0.4782
40	3.00	.075	0.0	3.00	-10.0	.135	-0.1438	-0.2154
41	6.02	.150	-7.5	5.00	-10.0	.025	-0.5512	-0.5541
42	2.95	.074	-2.5	2.00	-10.0	.057	-0.1472	-0.1622*
43	5.21	.130	-5.0	2.00	-10.0	.022	-0.4213	-0.3948
46	3.09	.077	-5.0	2.00	-10.0	.092	-0.2154	-0.2117
47	3.14	.079	-2.5	3.00	-5.0	.036	-0.1025	-0.0967
48	3.09	.077	0.0	3.00	-15.0	.041	-0.2166	-0.2078
56	5.23	.131	-5.0	3.00	-15.0	.060	-0.6685	-0.6343
57	5.19	.130	-5.0	2.00	-15.0	.027	-0.5691	-0.5584
58	5.12	.128	-12.5	5.00	-15.0	.027	-0.6474	-0.6037
59	3.05	.076	0.0	3.00	-20.0	.048	-0.2627	-0.2625
60	4.17	.104	-12.5	6.00	-20.0	-.007	-0.4713	-0.4707

TABLE A-10 (cont'd)

MEASURED AND FITTED LØNGITUDINAL FØRCE
BETA=10.DEG

RUN	CV	W	PHI	THETA	PSI	ZT	MEASURED	FITTED
62	5.18	.129	5.0	3.00	-20.0	.022	-0.6827	-0.6725
65	4.10	.102	-2.5	6.00	-20.0	.033	-0.4541	-0.4583
66	6.15	.154	-10.0	5.00	-20.0	.004	-1.0546	-0.9641*
67	2.11	.053	-7.5	2.00	-20.0	.046	-0.1367	-0.1495
69	4.05	.101	-5.0	5.00	-20.0	.047	-0.4818	-0.4737
70	3.01	.075	-7.5	2.00	-20.0	.076	-0.3202	-0.2959
71	3.00	.075	0.0	3.00	5.0	.038	0.0126	0.0152
72	6.08	.152	-5.0	3.00	5.0	.057	-0.0546	-0.0292
74	5.05	.126	-10.0	3.00	5.0	.108	-0.1740	-0.1678
75	6.03	.151	-2.5	5.00	5.0	.047	-0.0193	0.0149*
76	5.05	.126	-2.5	2.00	5.0	.038	0.0313	0.0377
77	5.05	.126	-10.0	5.00	5.0	.031	0.0077	0.0112
78	4.02	.101	-7.5	5.00	5.0	.008	0.0469	0.0511
79	2.04	.051	-10.0	3.00	5.0	.016	-0.0095	-0.0085
80	5.33	.133	-2.5	3.00	0.0	.061	-0.1948	-0.1633
82	3.87	.097	-2.5	2.00	0.0	.099	-0.1909	-0.1521
83	3.02	.075	-2.5	3.00	-5.0	.038	-0.0967	-0.0923
418	1.85	.069	0.0	3.00	0.0	.060	-0.0292	-0.0302
419	2.96	.111	0.0	3.00	0.0	.044	-0.0479	-0.0352
420	3.95	.148	0.0	3.00	0.0	.033	-0.0649	-0.0464
421	5.02	.188	0.0	3.00	0.0	.025	-0.0864	-0.0753
422	6.09	.228	0.0	3.00	0.0	.022	-0.0905	-0.1349
423	3.86	.145	0.0	3.00	0.0	.028	-0.0552	-0.0391
424	3.91	.146	0.0	3.00	0.0	.045	-0.0795	-0.0593
425	3.96	.148	0.0	3.00	0.0	.067	-0.1101	-0.0892
426	4.03	.151	0.0	3.00	0.0	.117	-0.1951	-0.1688
427	4.01	.150	0.0	3.00	0.0	.158	-0.2431	-0.2292
428	3.99	.150	5.0	3.00	0.0	.027	-0.0572	-0.0343
429	4.02	.151	-2.5	3.00	0.0	.031	-0.0659	-0.0534
430	3.99	.150	-5.0	3.00	0.0	.027	-0.0653	-0.0564
431	4.01	.150	-7.5	3.00	0.0	.017	-0.0604	-0.0558
432	4.00	.150	-10.0	3.00	0.0	.011	-0.0634	-0.0615
433	4.01	.150	-12.5	3.00	0.0	.006	-0.0656	-0.0712
434	3.99	.150	-12.5	3.00	5.0	.007	0.0607	0.0630
435	4.00	.150	-12.5	3.00	-5.0	-.002	-0.1926	-0.1972
436	4.02	.151	-12.5	3.00	-10.0	-.004	-0.3331	-0.3348
438	3.97	.149	0.0	3.00	5.0	.032	0.0716	0.0885
440	4.01	.150	0.0	3.00	-5.0	.035	-0.2025	-0.1891
441	4.00	.150	0.0	3.00	-10.0	.036	-0.3408	-0.3287
443	3.98	.149	0.0	3.00	-15.0	.040	-0.4717	-0.4670
444	3.98	.149	0.0	3.00	-20.0	.035	-0.5886	-0.5989
445	3.98	.149	0.0	2.00	0.0	.036	-0.0757	-0.0630
446	3.98	.149	0.0	4.00	0.0	.032	-0.0642	-0.0489
448	4.02	.151	0.0	5.00	0.0	.025	-0.0576	-0.0488
449	4.03	.151	0.0	6.00	0.0	.024	-0.0606	-0.0495
451	1.81	.068	-10.0	4.00	5.0	.132	-0.0369	-0.0062*
452	4.01	.150	-2.5	3.00	-5.0	.043	-0.2161	-0.2068
455	4.91	.184	5.0	4.00	-20.0	.131	-1.0887	-1.0982
456	4.90	.184	-7.5	4.00	5.0	.099	-0.0572	-0.0638
457	2.92	.109	-2.5	3.00	-5.0	.043	-0.1183	-0.1128

TABLE A-10 (cont'd)

MEASURED AND FITTED LONGITUDINAL FORCE
BETA=10. DEG

RUN	CV	W	PHI	THETA	PSI	ZT	MEASURED	FITTED
458	4.00	.150	-7.5	6.00	0.0	.010	-0.0553	-0.0418
459	5.96	.224	0.0	2.00	-5.0	.025	-0.3905	-0.4547*
460	5.01	.188	-10.0	5.00	0.0	.045	-0.1646	-0.1891
463	4.02	.151	-12.5	3.00	5.0	.110	-0.0972	-0.0879
465	5.97	.224	0.0	2.00	5.0	.090	-0.0718	-0.0660
466	5.97	.224	-12.5	5.00	-20.0	.011	-1.3841	-1.3932
467	4.00	.150	-7.5	6.00	0.0	.011	-0.0387	-0.0432
469	5.05	.189	5.0	4.00	-10.0	.083	-0.6263	-0.6342
470	3.01	.113	-2.5	3.00	0.0	.131	-0.1132	-0.1086
471	2.99	.112	-2.5	3.00	-5.0	.047	-0.1218	-0.1195
473	4.96	.186	-5.0	6.00	-20.0	.024	-0.9145	-0.9326
475	4.97	.186	-2.5	2.00	-20.0	.086	-1.1013	-1.0858
476	4.97	.186	5.0	3.00	0.0	.031	-0.0872	-0.0751
483	1.98	.074	-10.0	6.00	-5.0	.168	-0.1311	-0.1315
484	2.91	.109	-2.5	2.00	0.0	.089	-0.0965	-0.0816
485	3.01	.113	0.0	6.00	-20.0	.133	-0.4568	-0.4368
487	3.93	.148	-10.0	2.00	-5.0	.097	-0.3622	-0.3420
488	3.00	.113	-2.5	3.00	-5.0	.043	-0.1233	-0.1185
489	4.13	.155	-5.0	2.00	5.0	.112	-0.1210	-0.0704*
490	6.08	.228	-5.0	2.00	5.0	.081	-0.0751	-0.0973
491	4.10	.154	-7.5	3.00	-5.0	.075	-0.2988	-0.2891
492	4.04	.152	0.0	3.00	0.0	.028	-0.0507	-0.0429
494	3.18	.119	-2.5	4.00	-5.0	.140	-0.3454	-0.2163*
496	6.07	.228	5.0	5.00	-15.0	.074	-1.2208	-1.2348
499	6.05	.227	-10.0	5.00	-15.0	.001	-1.0668	-1.0590
500	4.08	.153	-5.0	6.00	-5.0	.015	-0.1965	-0.1875
502	3.09	.116	-12.5	4.00	0.0	.105	-0.1339	-0.1119
503	3.10	.116	-2.5	4.00	-15.0	.053	-0.3043	-0.3031
505	3.03	.114	-2.5	5.00	5.0	.161	-0.0682	-0.0560
506	3.02	.113	-2.5	3.00	-5.0	.041	-0.1216	-0.1184
507	3.01	.113	-5.0	2.00	5.0	.092	-0.0448	-0.0151*
508	2.99	.112	-5.0	5.00	-10.0	.104	-0.2709	-0.2543
512	2.01	.075	-7.5	6.00	-10.0	.220	-0.2012	-0.2123
513	5.15	.193	-10.0	5.00	-10.0	.042	-0.6486	-0.6448
514	5.10	.191	-12.5	2.00	-10.0	-.016	-0.5050	-0.5260
795	3.00	.225	0.0	3.00	0.0	.055	-0.0168	-0.0278*
796	2.99	.224	5.0	3.00	0.0	.047	-0.0140	-0.0084
797	3.01	.226	-2.5	3.00	0.0	.056	-0.0201	-0.0361*
798	3.00	.225	-5.0	3.00	0.0	.051	-0.0187	-0.0404*
799	3.01	.226	-7.5	3.00	0.0	.046	-0.0203	-0.0452*
800	3.00	.225	-10.0	3.00	0.0	.039	-0.0235	-0.0477*
801	3.00	.225	-12.5	3.00	0.0	.033	-0.0269	-0.0506*
802	2.99	.224	0.0	3.00	5.0	.054	0.1337	0.1295
803	2.99	.224	0.0	3.00	-5.0	.068	-0.1849	-0.1928
804	2.98	.223	0.0	3.00	-10.0	.072	-0.3355	-0.3487
805	2.99	.224	0.0	3.00	-15.0	.075	-0.4964	-0.5086
806	3.00	.225	0.0	3.00	-20.0	.069	-0.6411	-0.6580
807	3.00	.225	0.0	2.00	0.0	.067	-0.0388	-0.0504
808	2.97	.223	0.0	4.00	0.0	.058	-0.0181	-0.0289*
809	3.00	.225	0.0	5.00	0.0	.053	-0.0206	-0.0327*

TABLE A-10 (cont'd)

MEASURED AND FITTED LONGITUDINAL FORCE
BETA=10.DEG

RUN	CV	W	PHI	THETA	PSI	ZT	MEASURED	FITTED
810	2.99	.224	0.0	6.00	0.0	056	-0.0301	-0.0357*
811	3.00	.225	0.0	3.00	0.0	.051	-0.0138	-0.0255*
812	3.00	.225	0.0	3.00	0.0	.082	-0.0395	-0.0469
813	3.00	.225	0.0	3.00	0.0	.130	-0.0853	-0.0929
815	2.01	.151	0.0	3.00	0.0	.104	-0.0306	-0.0220
816	2.51	.188	-2.5	3.00	0.0	.069	-0.0216	-0.0247
817	3.01	.226	0.0	6.00	-20.0	.036	-0.6627	-0.6565
818	3.02	.226	5.0	6.00	-5.0	.175	-0.2889	-0.2954
819	3.02	.226	-2.5	6.00	5.0	.211	-0.0104	-0.0137
820	2.03	.152	0.0	4.00	-10.0	.205	-0.2204	-0.2392
821	3.01	.226	-12.5	3.00	-10.0	.017	-0.3291	-0.3574
822	3.01	.226	-2.5	3.00	-5.0	.065	-0.1865	-0.2022
823	2.02	.152	-12.5	3.00	-10.0	.093	-0.1800	-0.1700
824	2.52	.189	-10.0	3.00	5.0	.111	0.0438	0.0474
825	2.01	.150	-5.0	3.00	-15.0	.112	-0.2461	-0.2511
826	2.48	.186	-12.5	6.00	-10.0	.190	-0.3599	-0.3715
827	2.48	.186	-12.5	5.00	5.0	.281	-0.0975	-0.0788
828	2.99	.224	0.0	3.00	-5.0	.084	-0.1954	-0.2053
829	1.99	.149	5.0	6.00	-10.0	.287	-0.2719	-0.2666
830	2.00	.150	-5.0	3.00	-10.0	.076	-0.1598	-0.1622
831	2.50	.187	-2.5	5.00	-20.0	.248	-0.5949	-0.6048
832	2.99	.224	-2.5	3.00	-5.0	.065	-0.1859	-0.1995
833	1.96	.147	-5.0	6.00	-5.0	.263	-0.1925	-0.2106
834	2.95	.221	5.0	5.00	0.0	.063	-0.0319	-0.0308
835	2.96	.222	-5.0	6.00	0.0	.034	-0.0144	-0.0202
836	1.98	.148	-12.5	3.00	-20.0	.019	-0.2856	-0.2890
839	2.06	.155	5.0	4.00	0.0	.192	-0.0841	-0.0648
840	2.03	.153	-7.5	3.00	5.0	.088	0.0411	0.0529
841	2.98	.223	0.0	5.00	-20.0	.219	-0.8062	-0.7950
842	2.99	.224	-7.5	6.00	-15.0	.031	-0.4930	-0.4822
845	2.98	.223	5.0	6.00	-10.0	.174	-0.4549	-0.4390
846	3.01	.226	-2.5	3.00	-5.0	.053	-0.1883	-0.1931
847	2.54	.190	-7.5	5.00	0.0	.242	-0.1729	-0.1658
848	3.01	.226	-10.0	5.00	0.0	.204	-0.1843	-0.2041
849	2.55	.191	0.0	5.00	-5.0	.046	-0.1328	-0.1320
850	2.54	.191	-2.5	4.00	-15.0	.180	-0.4584	-0.4558
851	2.08	.156	0.0	5.00	5.0	.038	0.0642	0.0512
852	2.53	.190	5.0	6.00	-20.0	.212	-0.5566	-0.5628
853	2.05	.154	-5.0	8.00	-15.0	.288	-0.4201	-0.4051
855	3.01	.226	-5.0	2.00	5.0	.074	0.0823	0.0817
856	2.53	.190	-12.5	4.00	-10.0	.182	-0.3671	-0.3789
857	3.00	.225	-2.5	3.00	-5.0	.049	-0.1836	-0.1896
858	2.99	.224	-5.0	4.00	0.0	.157	-0.1170	-0.1325
859	2.53	.190	-5.0	6.00	-5.0	.169	-0.2238	-0.2280
861	2.54	.190	-12.5	4.00	-5.0	.209	-0.2746	-0.2898
862	2.97	.223	-12.5	5.00	-20.0	.057	-0.6950	-0.6693*
863	3.00	.225	-5.0	4.00	-5.0	.026	-0.8141	-0.1808*

MEAN ERROR= -0.0111
STANDARD DEVIATION= 0.0925

TABLE A-11

MEASURED AND FITTED LONGITUDINAL FORCE
BETA=15.DEG

RUN	CV	W	PHI	THETA	PSI	ZT	MEASURED	FITTED
141	4.00	.000	5.0	3.60	5.0	.050	-0.0443	-0.0525
143	3.00	.000	4.7	2.60	0.0	.053	-0.0232	-0.0461*
144	6.00	.000	14.8	3.00	0.0	.149	-0.5141	-0.5047
145	4.00	.000	4.8	3.60	0.0	.050	-0.0458	-0.0525
146	4.00	.000	-5.2	3.60	0.0	.050	-0.0460	-0.0531
153	2.00	.000	-2.1	3.60	0.0	.114	-0.0230	-0.0551*
157	4.00	.000	9.8	3.60	0.0	.035	-0.0413	-0.0447
158	4.00	.000	14.7	3.60	0.0	.014	-0.0378	-0.0377
159	3.00	.000	14.7	3.60	0.0	.169	-0.1457	-0.1437
160	4.00	.000	19.8	3.60	0.0	-.005	-0.0427	-0.0415
161	4.00	.000	19.8	4.60	0.0	.155	-0.2309	-0.2428
162	4.00	.000	19.7	4.60	0.0	.162	-0.2295	-0.2521
165	2.00	.000	4.7	5.60	0.0	.371	-0.1526	-0.1520
166	6.00	.000	9.7	5.60	0.0	.029	-0.0788	-0.0966
167	3.00	.000	19.7	5.60	0.0	.161	-0.1316	-0.1503
168	3.00	.000	19.7	5.60	0.0	.280	-0.2487	-0.2418
169	2.00	.000	19.7	6.60	0.0	.067	-0.0226	-0.0271
170	5.00	.000	9.7	6.60	0.0	.030	-0.0552	-0.0619
171	4.00	.000	9.7	6.60	0.0	.147	-0.2050	-0.1872
172	3.00	.000	-5.3	6.60	0.0	.082	-0.0516	-0.0585
174	6.00	.000	-5.2	6.60	0.0	.039	-0.0827	-0.1016
175	4.00	.000	4.7	3.60	5.0	.061	-0.0406	-0.0665*
185	4.00	.000	4.7	3.60	5.0	.046	-0.0285	-0.0480*
186	4.00	.000	-0.3	3.60	5.0	.065	-0.0390	-0.0686*
187	3.00	.000	-5.3	3.60	5.0	.119	-0.0547	-0.0879*
189	5.00	.000	-0.3	2.50	5.0	.063	-0.0693	-0.1236*
191	4.00	.000	9.8	3.60	5.0	.173	-0.2115	-0.2285
192	4.00	.000	9.7	3.60	5.0	.177	-0.2109	-0.2327
193	3.00	.000	14.7	3.70	5.0	.250	-0.2057	-0.2188
194	3.00	.000	14.7	3.60	5.0	.017	-0.0126	-0.0243*
195	3.00	.000	14.7	1.60	5.0	.048	-0.0391	-0.0692*
196	6.00	.000	-5.2	5.60	5.0	.035	-0.0609	-0.0873
197	6.00	.000	9.7	5.60	5.0	.026	-0.0689	-0.0924
198	6.00	.000	19.8	5.60	5.0	-.016	-0.0644	-0.0835
199	2.00	.000	-0.3	5.60	5.0	.101	-0.0167	-0.0493*
200	2.00	.000	-5.3	5.60	5.0	.257	-0.0813	-0.1057
201	4.00	.000	19.8	5.60	5.0	.139	-0.2280	-0.2308
202	5.00	.000	14.7	6.60	5.0	.010	-0.0469	-0.0604
203	5.00	.000	4.7	6.60	5.0	.036	-0.0556	-0.0578
204	5.00	.000	4.8	6.60	5.0	.037	-0.0568	-0.0594
205	3.00	.000	-5.3	6.60	5.0	.279	-0.2072	-0.2072
206	4.00	.000	4.7	3.60	5.0	.055	-0.0435	-0.0584
207	4.00	.000	-0.3	3.60	-5.0	.063	-0.0422	-0.0655*
208	6.00	.000	14.7	3.60	-5.0	.155	-0.4923	-0.4956
210	5.00	.000	-0.3	2.50	-5.0	.103	-0.1821	-0.2077
211	4.00	.000	4.7	2.60	-5.0	.094	-0.0929	-0.1247
212	2.00	.000	4.7	2.60	-5.0	.162	-0.0502	-0.0903*
213	4.00	.000	9.8	2.60	-5.0	.043	-0.0414	-0.0684*
214	2.00	.000	-0.3	4.60	-5.0	.170	-0.0388	-0.0734*
215	6.00	.000	14.8	4.60	-5.0	.126	-0.3905	-0.3911

TABLE A-11 (cont'd)

MEASURED AND FITTED LONGITUDINAL FORCE
BETA=15.DEG

RUN	CV	W	PHI	THETA	PSI	ZT	MEASURED	FITTED
216	5.00	.000	14.7	5.50	-5.0	.150	-0.3226	-0.3059
218	3.00	.000	9.7	5.60	-5.0	.242	-0.1791	-0.1786
219	4.00	.000	9.7	5.60	-5.0	.045	-0.0565	-0.0557
220	6.00	.000	14.8	5.60	-5.0	.007	-0.0629	-0.0772
221	6.00	.000	14.8	6.60	-5.0	.005	-0.0718	-0.0639
222	4.00	.000	9.7	6.60	-5.0	.044	-0.0603	-0.0505
223	3.00	.000	19.7	6.60	10.0	-.009	-0.0149	-0.0111
224	4.00	.000	19.7	6.60	10.0		-0.0347	-0.0351
225	2.00	.000	-5.3	6.60	10.0	.104	-0.0206	-0.0457*
226	3.00	.000	4.7	6.60	10.0	.117	-0.0890	-0.0912
227	5.00	.000	-0.3	6.50	10.0	.070	-0.1204	-0.1074
228	3.00	.000	14.8	6.60	10.0	.191	-0.2050	-0.1773
231	3.00	.000	19.8	4.60	10.0	.179	-0.1845	-0.1677
232	5.00	.000	14.7	4.50	10.0	.035	-0.1138	-0.1021
233	2.00	.000	14.7	4.60	10.0	.037	-0.0051	-0.0245*
234	4.00	.000	4.8	3.60	5.0	.054	-0.0435	-0.0583
235	5.00	.000	4.8	3.50	10.0	.118	-0.2258	-0.2188
238	3.00	.000	9.7	3.60	10.0	.240	-0.1846	-0.1996
239	4.00	.000	9.8	3.60	10.0	.059	-0.0616	-0.0766
240	5.00	.000	8.6	3.50	10.0	.020	-0.0692	-0.0407
241	3.00	.000	4.8	3.60	10.0	.131	-0.0658	-0.0986
242	4.00	.000	-0.3	3.60	10.0	.064	-0.0438	-0.0702*
243	4.00	.000	9.7	2.60	10.0	.050	-0.0443	-0.0719*
244	3.00	.000	19.7	5.60	10.0	-.004	-0.0223	-0.0250
245	3.00	.000	-4.9	5.50	10.0	.180	-0.1040	-0.1269
246	5.00	.000	-5.2	5.50	15.0	.077	-0.1295	-0.1198
247	3.00	.000	-0.3	5.60	15.0	.165	-0.0997	-0.1171
248	5.00	.000	14.8	5.50	15.0	.029	-0.1080	-0.0985
249	6.00	.000	14.7	5.60	15.0	.016	-0.0894	-0.1037
250	5.00	.000	-0.3	5.50	15.0	.044	-0.0496	-0.0619
251	2.00	.000	4.7	6.60	15.0	.091	-0.0155	-0.0460*
252	6.00	.000	3.9	6.60	15.0	.026	-0.0774	-0.0483
253	3.00	.000	19.7	6.60	15.0	.018	-0.0457	-0.0463
254	4.00	.000	-5.3	6.60	15.0	.150	-0.1786	-0.1600
255	6.00	.000	-5.3	4.60	15.0	.067	-0.1377	-0.1606
256	3.00	.000	14.7	4.60	15.0	.094	-0.0783	-0.0893
257	5.00	.000	9.8	4.50	15.0	.077	-0.1493	-0.1492
258	3.00	.000	4.7	4.60	15.0	.266	-0.2028	-0.1984
260	4.00	.000	-0.3	4.60	15.0	.230	-0.2642	-0.2654
261	4.00	.000	-0.3	4.60	15.0	.049	-0.0290	-0.0530*
262	3.00	.000	9.8	4.60	15.0	.056	-0.0226	-0.0522*
263	6.00	.000	9.8	4.60	15.0	.033	-0.0925	-0.1005
264	4.00	.000	-0.3	3.60	15.0	.069	-0.0432	-0.0806*
265	6.00	.000	19.8	3.60	15.0	-.009	-0.0904	-0.0775
266	4.00	.000	9.8	2.60	15.0	.053	-0.0486	-0.0794*
267	3.00	.000	9.8	2.60	15.0	.095	-0.0504	-0.0891*
268	3.00	.000	4.7	2.60	15.0	.089	-0.0364	-0.0817*
270	3.00	.000	4.8	2.50	15.0	.099	-0.2680	-0.2937
271	6.00	.000	4.8	2.50	15.0	.097	-0.2793	-0.2876
275	4.00	.000	9.8	2.50	15.0	.117	-0.1634	-0.1704

TABLE A-11 (cont'd)

MEASURED AND FITTED LONGITUDINAL FORCE
BETA=15.DEG

RUN	CV	W	PHI	THETA	PSI	ZT	MEASURED	FITTED
276	4.00	.000	4.8	3.60	5.0	.058	-0.0456	-0.0624
277	4.00	.000	-0.3	3.60	20.0	.068	-0.0458	-0.0868
277	3.00	.000	14.7	3.50	20.0	.049	-0.0377	-0.0565*
279	4.00	.000	4.8	3.50	20.0	.133	-0.1629	-0.1667
280	6.00	.000	4.8	2.50	20.0	.100	-0.2734	-0.2947
281	5.00	.000	4.8	2.50	20.0	.168	-0.3614	-0.3529
282	6.00	.000	14.7	2.50	20.0	.028	-0.1313	-0.1332
283	4.00	.000	14.7	2.50	20.0	.034	-0.0568	-0.0725
286	4.00	.000	14.7	2.50	20.0	.020	-0.0325	-0.0545*
286	3.00	.000	9.7	4.50	20.0	.043	-0.0144	-0.0481*
287	3.00	.000	9.7	4.50	20.0	.075	-0.0420	-0.0704*
288	4.00	.000	19.8	4.50	20.0	****	-0.0457	-0.0520*
289	2.00	.000	14.7	4.50	20.0	.098	-0.0273	-0.0555*
290	2.00	.000	19.8	4.60	20.0	.136	-0.0695	-0.0705
294	3.00	.000	-0.3	5.50	20.0	.090	-0.0511	-0.0680
295	3.00	.000	-0.3	5.60	20.0	.056	-0.0179	-0.0447*
296	4.00	.000	-0.3	6.60	20.0	.046	-0.0328	-0.0384
297	4.00	.000	4.7	3.60	5.0	.059	-0.0536	-0.0640
298	4.00	.000	4.8	1.60	5.0	.082	-0.1076	-0.1350
299	4.00	.000	14.7	1.60	5.0	.038	-0.0703	-0.0892
300	5.00	.000	-0.3	1.50	15.0	.051	-0.2088	-0.1463
109	2.35	.059	0.0	3.00	0.0	.069	-0.0349	-0.0419
110	2.92	.073	0.0	3.00	0.0	.060	-0.0461	-0.0415
111	3.88	.097	0.0	3.00	0.0	.052	-0.0675	-0.0514
112	4.95	.124	0.0	3.00	0.0	.045	-0.0852	-0.0774
113	6.02	.150	0.0	3.00	0.0	.037	-0.1650	-0.1164
114	2.87	.072	0.0	3.00	0.0	.049	-0.0429	-0.0329
115	3.02	.076	0.0	3.00	0.0	.081	-0.0639	-0.0598
116	3.01	.075	0.0	3.00	0.0	.155	-0.1337	-0.1236
117	2.82	.071	0.0	3.00	0.0	.156	-0.1175	-0.1138
119	4.03	.101	0.0	3.00	0.0	.181	-0.2564	-0.2466
120	3.03	.076	5.0	3.00	0.0	.059	-0.0561	-0.0408
121	3.02	.075	-5.0	3.00	0.0	.056	-0.0490	-0.0447
122	2.87	.072	-10.0	3.00	0.0	.052	-0.0514	-0.0472
123	2.89	.072	-15.0	3.00	0.0	.046	-0.0642	-0.0536
124	3.05	.076	-20.0	3.00	0.0	.040	-0.0809	-0.0702
125	3.06	.076	0.0	3.00	5.0	.058	0.0054	0.0110*
127	3.01	.075	0.0	3.00	-10.0	.067	-0.1504	-0.1559
128	3.03	.076	0.0	3.00	-15.0	.066	-0.2008	-0.2134
129	3.01	.075	0.0	3.00	-20.0	.055	-0.2419	-0.2594
130	2.99	.075	0.0	2.00	0.0	.066	-0.0621	-0.0633
131	3.02	.075	0.0	4.00	0.0	.063	-0.0440	-0.0403
132	3.06	.076	0.0	5.00	0.0	.054	-0.0421	-0.0352
133	3.06	.076	0.0	6.00	0.0	.057	-0.0565	-0.0380
136	4.04	.101	-5.0	3.00	0.0	.095	-0.1380	-0.1236
137	6.09	.152	-15.0	5.00	-10.0	.003	-0.5789	-0.5578
138	6.05	.151	-20.0	6.00	-5.0	****	-0.4290	-0.3781
139	4.02	.100	-20.0	6.00	-20.0	****	-0.4132	-0.4393
140	5.00	.125	5.0	3.00	-20.0	.022	-0.6081	-0.6216
141	4.99	.125	5.0	3.00	-20.0	.021	-0.6186	-0.6176

TABLE A-11 (cont'd)

MEASURED AND FITTED LONGITUDINAL FORCE
BETA=15.DEG

RUN	CV	W	PHI	THETA	PSI	ZT	MEASURED	FITTED
142	2.91	.073	-5.0	3.00	-5.0	.056	-0.0930	-0.0919
143	1.65	.041	-10.0	6.00	0.0	.153	-0.0521	-0.0628
144	3.79	.095	-10.0	3.00	-20.0	.093	-0.4857	-0.4515
145	4.76	.119	5.0	2.00	-5.0	.045	-0.2229	-0.2206
147	3.87	.097	-5.0	6.00	-20.0	.026	-0.3901	-0.3781
149	[illegible]	[illegible]	-10.0	3.00	5.0	.097	-0.1550	-0.1255
150	3.94	.098	-15.0	4.00	-5.0	.093	-0.2698	-0.2386
151	2.95	.074	-10.0	2.00	-10.0	.105	-0.2213	-0.2065
154	4.78	.120	-5.0	3.00	-5.0	.032	-0.1908	-0.1884
156	3.00	.075	0.0	2.00	-10.0	.053	-0.1521	-0.1591
157	3.02	.076	-5.0	6.00	-15.0	.050	-0.2137	-0.2013
158	3.99	.100	-5.0	6.00	-15.0	.040	-0.3409	-0.3277
160	2.40	.060	-10.0	2.00	-20.0	.044	-0.1721	-0.1818
161	6.18	.154	5.0	3.00	-20.0	.044	-1.1230	-1.0160*
162	6.21	.155	5.0	3.00	-20.0	.040	-1.0429	-1.0137
163	6.18	.154	-10.0	2.00	-15.0	.004	-0.7509	-0.7338
164	4.38	.110	-10.0	5.00	-20.0	.041	-0.5427	-0.5255
165	3.23	.081	-10.0	2.00	-20.0	.082	-0.3625	-0.3392
166	2.15	.054	-10.0	4.00	-15.0	.037	-0.1068	-0.1118
167	2.64	.066	-5.0	3.00	-5.0	.065	-0.0847	-0.0856
168	5.65	.141	-5.0	5.00	5.0	.073	-0.0352	-0.0029*
169	4.72	.118	-5.0	2.00	-10.0	.052	-0.3601	-0.3649
170	5.81	.145	5.0	3.00	-5.0	.040	-0.3326	-0.3051
171	4.74	.118	0.0	2.00	5.0	.064	-0.0171	0.0020*
173	5.91	.148	-5.0	3.00	0.0	.077	-0.2854	-0.2380
174	4.83	.121	-20.0	5.00	5.0	.045	-0.0214	-0.0599*
175	6.04	.151	-20.0	5.00	-5.0	.020	-0.4892	-0.4608
177	3.75	.094	-10.0	5.00	5.0	.013	0.0423	0.0508
178	2.96	.074	-5.0	3.00	-5.0	.048	-0.0931	-0.0878
180	3.18	.079	-15.0	4.00	-10.0	.111	-0.2433	-0.2318
181	5.11	.128	-5.0	2.00	-15.0	.046	-0.5709	-0.5682
182	2.15	.054	-15.0	3.00	5.0	.002	0.0078	0.0056
183	4.91	.123	-20.0	5.00	-15.0	.012	-0.5812	-0.5604
184	5.08	.127	5.0	4.00	0.0	.071	-0.1704	-0.1269
527	1.82	.068	0.0	3.00	0.0	.112	-0.0337	-0.0534*
528	2.87	.108	0.0	3.00	0.0	.076	-0.0548	-0.0491
529	3.87	.145	0.0	3.00	0.0	.052	-0.0680	-0.0484
530	4.98	.187	0.0	3.00	0.0	.043	-0.0810	-0.0782
531	5.97	.224	0.0	3.00	0.0	.037	-0.0945	-0.1282
532	2.96	.111	0.0	3.00	0.0	.052	-0.0285	-0.0317
533	2.97	.111	0.0	3.00	0.0	.104	-0.0844	-0.0752
534	2.96	.111	0.0	3.00	0.0	.154	-0.1197	-0.1190
536	3.98	.149	0.0	3.00	0.0	.146	-0.2045	-0.1892
537	3.97	.149	0.0	3.00	0.0	.195	-0.2963	-0.2664
538	2.96	.111	5.0	3.00	0.0	.075	-0.0621	-0.0476
539	2.96	.111	-5.0	3.00	0.0	.074	-0.0618	-0.0556
540	3.00	.112	-10.0	3.00	0.0	.063	-0.0631	-0.0578
541	2.97	.111	-15.0	3.00	0.0	.044	-0.0657	-0.0563
542	2.98	.112	-20.0	3.00	0.0	.019	-0.0571	-0.0557
543	2.98	.112	0.0	3.00	5.0	.074	0.0214	0.0257

TABLE A-11 (cont'd)

MEASURED AND FITTED LØNGITUDINAL FØRCE
BETA=15.DEG

RUN	CV	W	PHI	THETA	PSI	ZT	MEASURED	FITTED
544	2.98	.112	0.0	3.00	5.0	.078	-0.1312	-0.1309
545	2.99	.112	0.0	3.00	-10.0	.079	-0.2101	-0.2111
546	2.97	.112	0.0	3.00	-20.0	.057	-0.3377	-0.3509
547	2.99	.112	0.0	3.00	-15.0	.084	-0.2872	-0.2950
548	2.97	.111	0.0	2.00	0.0	.080	-0.0778	-0.0718
549	2.98	.112	0.0	4.00	0.0	.060	-0.0411	-0.0354
550	2.97	.112	0.0	5.00	0.0	.059	-0.0503	-0.0361
551	3.01	.113	0.0	6.00	0.0	.055	-0.0491	-0.0349
552	1.90	.071	-15.0	4.00	5.0	.136	-0.0336	-0.0261
553	4.03	.151	-5.0	3.00	-5.0	.064	-0.2279	-0.2221
555	5.98	.224	5.0	4.00	-20.0	.064	-1.3781	-1.3905
556	4.99	.187	-10.0	4.00	5.0	.136	-0.1088	-0.0904
558	3.99	.150	-15.0	6.00	0.0	.003	-0.0572	-0.0664
559	3.00	.113	-5.0	3.00	-5.0	.071	-0.1347	-0.1325
560	6.00	.225	0.0	2.00	-5.0	.051	-0.4762	-0.5061
561	5.00	.188	-15.0	5.00	0.0	.065	-0.1945	-0.2197
564	6.01	.225	-20.0	3.00	5.0	.054	-0.0273	-0.0701*
566	6.01	.225	0.0	3.00	5.0	.086	0.0231	0.0298
567	6.00	.225	-20.0	5.00	-20.0	****	-1.4092	-1.4219
568	3.98	.149	-10.0	6.00	0.0	.014	-0.0461	-0.0476
569	3.97	.149	5.0	4.00	-10.0	.169	-0.5085	-0.4791
570	2.99	.112	-5.0	3.00	0.0	.146	-0.2365	-0.1174*
571	4.97	.186	-5.0	6.00	-20.0	.049	-0.9344	-0.9518
572	3.00	.112	-5.0	3.00	-5.0	.071	-0.1359	-0.1319
573	5.95	.223	-5.0	2.00	-20.0	.082	-1.4975	-1.4976
577	4.97	.186	5.0	3.00	-20.0	.106	-1.0436	-1.0559
579	1.99	.075	-15.0	6.00	-5.0	.186	-0.1372	-0.1305
580	2.96	.111	0.0	6.00	-20.0	.191	-0.4686	-0.4374
581	6.00	.225	-20.0	2.00	0.0	****	-0.1691	-0.2105
583	5.95	.223	-15.0	2.00	-5.0	.050	-0.5889	-0.5932
585	6.01	.225	-10.0	3.00	-5.0	.058	-0.5327	-0.5631
586	2.96	.111	-5.0	3.00	-5.0	.072	-0.1098	-0.1295
588	3.91	.147	-5.0	3.00	-5.0	.125	-0.3186	-0.2925
593	4.03	.151	-10.0	6.00	-5.0	.021	-0.2057	-0.2000
594	2.97	.111	-20.0	4.00	0.0	.138	-0.1544	-0.1388
595	3.01	.113	0.0	4.00	-15.0	.104	-0.3123	-0.3081
596	2.03	.076	-5.0	5.00	5.0	.276	-0.1068	-0.0772
598	3.01	.113	-10.0	5.00	-10.0	.128	-0.2952	-0.2692
599	3.02	.113	-5.0	3.00	-5.0	.073	-0.1371	-0.1352
600	2.01	.075	-10.0	6.00	-10.0	.254	-0.2083	-0.1914
601	5.02	.188	-20.0	5.00	-10.0	.026	-0.6272	-0.6427
602	5.05	.189	-20.0	2.00	-10.0	****	-0.5001	-0.4963
603	3.05	.114	-15.0	5.00	-15.0	.036	-0.3104	-0.3056
604	5.99	.225	-10.0	4.00	-15.0	.052	-1.1381	-1.1386
618	1.92	.144	0.0	3.00	0.0	.093	-0.0263	-0.0346
619	2.99	.224	0.0	3.00	0.0	.070	-0.0298	-0.0292
620	2.50	.188	0.0	3.00	0.0	.078	-0.0274	-0.0283
621	3.07	.230	0.0	3.00	0.0	.050	-0.0162	-0.0115
622	3.06	.230	0.0	3.00	0.0	.086	-0.0473	-0.0480
623	3.05	.228	0.0	3.00	0.0	.136	-0.0842	-0.1001

TABLE A-11 (cont'd)

MEASURED AND FITTED LONGITUDINAL FORCE
BETA=15.DEG

RUN	CV	W	PHI	THETA	PSI	ZT	MEASURED	FITTED
625	3.01	.226	5.0	3.00	0.0	.061	-0.0273	-0.0126
626	2.99	.224	-5.0	3.00	0.0	.066	-0.0362	-0.0369
627	3.01	.226	-10.0	3.00	0.0	.049	-0.0297	-0.0380
628	3.00	.225	-15.0	3.00	0.0	.028	-0.0284	-0.0403
629	3.01	.226	-20.0	3.00	0.0	.003	-0.0242	-0.0462
630	2.98	.223	0.0	3.00	5.0	.063	0.1267	0.1295
631	2.97	.223	0.0	3.00	-5.0	.070	-0.1811	-0.1826
632	2.96	.222	0.0	3.00	-10.0	.071	-0.3287	-0.3336
633	2.97	.223	0.0	3.00	-15.0	.072	-0.4744	-0.4876
634	2.97	.223	0.0	3.00	-20.0	.053	-0.6102	-0.6223
635	2.97	.223	0.0	2.00	0.0	.062	-0.0394	-0.0315
636	2.98	.223	0.0	4.00	0.0	.060	-0.0285	-0.0209
637	2.98	.223	0.0	5.00	0.0	.053	-0.0260	-0.0210
638	2.98	.223	0.0	6.00	0.0	.048	-0.0281	-0.0218
639	2.47	.185	0.0	6.00	-20.0	.058	-0.4332	-0.4356
640	2.48	.186	5.0	6.00	-5.0	.232	-0.2334	-0.2490
641	2.96	.222	-5.0	3.00	-5.0	.108	-0.2289	-0.2262
642	2.48	.186	-5.0	6.00	5.0	.275	-0.0726	-0.0615
643	1.97	.148	0.0	4.00	-10.0	.206	-0.2113	-0.2191
644	2.50	.187	-20.0	3.00	-10.0	****	-0.2300	-0.2290
645	1.99	.149	-20.0	3.00	-10.0	.069	-0.1844	-0.1702
646	2.96	.222	-5.0	3.00	-5.0	.061	-0.1875	-0.1822
660	2.99	.224	-15.0	3.00	5.0	.071	0.0776	0.0776
661	1.99	.150	-5.0	3.00	-15.0	.106	-0.2435	-0.2516
662	2.99	.224	-20.0	6.00	-10.0	.108	-0.4567	-0.4823
665	2.51	.188	0.0	3.00	-5.0	.092	-0.1524	-0.1483
667	3.00	.225	5.0	6.00	-10.0	.181	-0.4510	-0.4541
668	2.00	.150	-5.0	3.00	-10.0	.066	-0.1644	-0.1656
670	2.99	.224	-5.0	5.00	-20.0	.158	-0.7585	-0.7429
671	2.51	.188	5.0	5.00	0.0	.043	-0.0245	0.0032*
672	2.99	.224	-5.0	3.00	-5.0	.056	-0.1907	-0.1818
673	1.99	.149	-5.0	6.00	-5.0	.255	-0.1913	-0.1883
674	2.50	.188	5.0	5.00	0.0	.091	-0.0461	-0.0337
675	2.50	.188	-5.0	6.00	0.0	.037	-0.0230	-0.0176
676	1.99	.149	-20.0	3.00	-20.0	****	-0.2777	-0.2689
678	1.99	.149	-10.0	3.00	5.0	.079	0.0318	0.0312
681	2.51	.188	-10.0	6.00	-15.0	.034	-0.3514	-0.3608
682	2.50	.187	5.0	6.00	-10.0	.256	-0.3585	-0.3735
683	2.97	.223	-5.0	3.00	-5.0	.075	-0.1877	-0.1965
685	2.99	.224	-15.0	6.00	0.0	.229	-0.2115	-0.2279
686	2.50	.188	-15.0	8.00	0.0	.279	-0.2239	-0.2294
688	2.99	.224	0.0	5.00	-15.0	.185	-0.5974	-0.6060
689	2.00	.150	0.0	5.00	5.0	.077	0.0490	0.0427
690	3.00	.225	5.0	6.00	-20.0	.124	-0.7100	-0.6938
691	2.02	.152	-5.0	8.00	-15.0	.342	-0.4088	-0.4116
693	2.46	.185	-10.0	2.00	5.0	.086	0.0485	0.0437
694	2.96	.222	-[illegible].0	4.00	-10.0	.124	-0.4394	-0.4444
695	2.96	.222	[illegible].0	3.00	-5.0	.073	-0.1856	-0.1940
697	2.47	.185	-10.0	6.00	0.0	.224	-0.1337	-0.1480
698	2.99	.224	-10.0	6.00	-5.0	.134	-0.2763	-0.2949

TABLE A-11 (cont'd)

MEASURED AND FITTED LONGITUDINAL FORCE
DELTA=15.DEG

RUN	CV	F	PHI	THETA	PSI	ZT	MEASURED	FITTED
699	3.00	.225	5.0	8.00	-10.0	.222	-0.5112	-0.5160
700	3.00	.225	-20.0	4.00	-5.0	.177	-0.3419	-0.3414
701	2.48	.186	-20.0	5.00	-20.0	.087	-0.5149	-0.5163

MEAN ERRØR= 0.0019
STANDARD DEVIATIØN= 0.0021

TABLE A-12

MEASURED AND FITTED LONGITUDINAL FORCE
BETA=20.DEG

RUN	CV	W	PHI	THETA	PSI	ZT	MEASURED	FITTED
316	4.00	.000	4.8	3.70	5.0	.086	-0.0591	-0.0825
317	4.00	.000	4.7	3.70	5.0	.088	-0.0648	-0.0847
318	4.00	.000	4.7	3.60	0.0	.131	-0.0632	-0.1438*
326	4.00	.000	4.7	3.60	0.0	.116	-0.1053	-0.1234
328	4.00	.000	9.7	3.70	0.0	.070	-0.0552	-0.0690
329	4.00	.000	14.7	3.70	0.0	.047	-0.0432	-0.0547
330	4.00	.000	19.8	3.[illegible]	0.0	.025	-0.0418	-0.0480
331	4.00	.000	27.2	3.60	0.0	-.006	-0.0457	-0.0494
332	3.00	.000	19.7	3.60	0.0	.191	-0.1529	-0.1577
337	4.00	.000	27.3	4.70	0.0	.179	-0.2764	-0.2845
340	3.00	.000	4.7	2.60	0.0	.098	-0.0437	-0.0771*
342	6.00	.000	19.8	3.70	0.0	.141	-0.4405	-0.4917
344	3.00	.000	27.3	5.70	0.0	.281	-0.2530	-0.2429
345	3.00	.000	27.3	5.60	0.0	.173	-0.1460	-0.1680
349	5.00	.000	4.8	5.60	0.0	.053	-0.0525	-0.0758
351	6.00	.000	-5.3	6.70	0.0	.051	-0.0930	-0.1920*
353	2.00	.000	27.2	6.70	0.0	.068	-0.0272	-0.0470*
354	3.00	.000	-5.3	6.60	0.0	.110	-0.0585	-0.0840
355	4.00	.000	9.8	6.70	0.0	.186	-0.2425	-0.2172
356	3.00	.000	-0.3	6.70	-5.0	.236	-0.1564	-0.1675
357	4.00	.000	9.7	6.70	-5.0	.069	-0.0731	-0.0818
358	4.00	.000	9.7	6.70	-5.0	.060	-0.0793	-0.0705
359	4.00	.000	9.7	6.70	-5.0	.061	-0.0785	-0.0713
362	4.00	.000	9.7	5.60	-5.0	.065	-0.0757	-0.0663
364	3.00	.000	14.7	5.70	-5.0	.266	-0.2075	-0.1845
365	5.00	.000	19.8	5.60	-5.0	.170	-0.3824	-0.3423
366	6.00	.000	19.8	4.70	-5.0	.132	-0.4341	-0.4359
368	4.00	.000	9.7	2.60	-5.0	.109	-0.1063	-0.1402
369	2.00	.000	9.7	2.60	-5.0	.172	-0.0509	-0.0487
370	4.00	.000	14.7	2.60	-5.0	.045	-0.0553	-0.0579
371	5.00	.000	4.7	2.60	-5.0	.145	-0.2568	-0.2956
374	5.00	.000	-0.3	3.60	-5.0	.069	-0.0877	-0.0894
375	5.00	.000	-0.3	3.60	-5.0	.067	-0.0828	-0.0844
376	4.00	.000	-0.3	3.60	-5.0	.087	-0.0706	-0.0794
377	4.00	.000	4.7	3.60	5.0	.061	-0.0640	-0.0765
378	4.00	.000	4.8	3.60	5.0	.064	-0.0536	-0.0541
379	4.00	.000	-0.3	3.60	5.0	.084	-0.0688	-0.0761
380	3.00	.000	-5.3	3.60	5.0	.148	-0.0710	-0.0973
381	3.00	.000	-0.3	2.60	5.0	.117	-0.0544	-0.0906*
382	5.00	.000	4.7	2.60	5.0	.076	-0.1174	-0.1291
383	3.00	.000	19.7	2.60	5.0	.028	-0.0258	-0.0496*
385	5.00	.000	14.8	2.60	5.0	.153	-0.3709	-0.3662
387	6.00	.000	4.8	2.60	5.0	.151	-0.4624	-0.4366
388	3.00	.000	-5.2	6.70	5.0	.310	-0.2266	-0.2219
389	5.00	.000	9.7	6.60	5.0	.040	-0.0733	-0.0899
395	4.00	.000	27.4	5.60	5.0	.176	-0.2840	-0.2966
396	4.00	.000	4.8	3.60	5.0	.081	-0.0586	-0.0764
397	4.00	.000	-0.2	3.60	10.0	.084	-0.0551	-0.0738
398	3.00	.000	-5.3	3.60	10.0	.146	-0.0646	-0.0914
399	4.00	.000	9.8	3.60	10.0	.087	-0.0945	-0.0980

TABLE A-12 (cont'd)

MEASURED AND FITTED LONGITUDINAL FORCE
BETA=20.DEG

RUN	CV	W	PHI	THETA	PSI	ZT	MEASURED	FITTED
400	5.00	.000	19.7	3.60	10.0	.019	-0.0738	-0.0622
401	4.00	.000	14.8	3.60	10.0	.163	-0.2198	-0.2249
402	3.00	.000	14.7	6.60	10.0	.223	-0.1953	-0.1880
403	3.00	.000	4.7	6.60	10.0	.152	-0.1106	-0.1167
[illegible]	5.00	.000	-0.3	6.60	10.0	.091	-0.1525	-0.1623*
405	2.00	.000	-5.3	6.60	10.0	.120	-0.0263	-0.0551
[illegible]	4.00	.000	27.3	6.60	10.0	-.027	-0.0444	-0.0453
407	3.00	.000	27.2	6.60	10.0	-.025	-0.0164	-0.0194
408	2.00	.000	19.7	4.60	10.0	.038	-0.0068	-0.0321
409	4.00	.000	9.7	2.60	10.0	.063	-0.0597	-0.0761
410	3.00	.000	27.3	5.60	10.0	-.016	-0.0310	-0.0413
411	3.00	.000	-5.2	5.60	10.0	.211	-0.1346	-0.1333
412	3.00	.000	-5.3	5.60	10.0	.212	-0.1307	-0.1336
413	5.00	.000	-5.2	5.50	15.0	.089	-0.1326	-0.1352
414	3.00	.000	-0.3	5.60	15.0	.201	-0.1192	-0.1278
415	5.00	.000	19.7	5.50	15.0	.028	-0.1142	-0.1161
417	5.00	.000	-0.3	5.50	15.0	.057	-0.0730	-0.0822
419	6.00	.000	27.2	3.60	15.0	-.048	-0.0625	0.0159
420	4.00	.000	14.8	2.60	15.0	.056	-0.0649	-0.0834
421	3.00	.000	4.8	2.60	15.0	.109	-0.0482	-0.0822
422	3.00	.000	9.8	2.60	15.0	.152	-0.0747	-0.1283
423	4.00	.000	14.8	2.60	15.0	.130	-0.1925	-0.1996
424	6.00	.000	4.8	2.60	15.0	.125	-0.3826	-0.3719
427	5.00	.000	14.8	4.50	15.0	.077	-0.1684	-0.1609
428	4.00	.000	4.8	4.60	15.0	.215	-0.2523	-0.2393
429	4.00	.000	-0.2	4.70	15.0	.290	-0.3268	-0.3276
430	6.00	.000	-5.2	4.60	15.0	.080	-0.1736	-0.1971
431	3.00	.000	14.8	4.60	15.0	.135	-0.0913	-0.1118
432	5.00	.000	14.8	4.60	15.0	.033	-0.0579	-0.0746
433	3.00	.000	14.7	4.60	15.0	.056	-0.0237	-0.0593
434	4.00	.000	-0.3	4.60	15.0	.063	-0.0243	-0.0468
435	2.00	.000	4.7	6.70	15.0	.123	-0.0209	-0.0624
436	6.00	.000	9.7	6.70	15.0	.041	-0.0896	-0.2005
437	3.00	.000	27.2	6.60	15.0	.001	-0.0462	-0.0544
438	4.00	.000	-5.2	6.60	15.0	.185	-0.2047	-0.1943
439	4.00	.000	-0.3	6.60	20.0	.051	-0.0321	-0.0576
440	3.00	.000	4.7	5.60	20.0	.075	-0.0201	-0.0587
443	6.00	.000	27.2	5.50	20.0	-.013	-0.1914	-0.1722
445	2.00	.000	27.3	4.60	20.0	.138	-0.0770	-0.0633
446	4.00	.000	27.2	4.60	20.0	-.025	-0.0379	-0.0412
447	2.00	.000	19.8	4.60	20.0	.112	-0.0352	-0.0506
448	3.00	.000	4.7	4.60	20.0	.115	-0.0565	-0.0746
449	3.00	.000	9.7	4.60	20.0	.065	-0.0179	-0.0549*
450	4.00	.000	-0.3	3.60	20.0	.085	-0.0572	-0.0683
451	3.00	.000	19.7	3.60	20.0	.057	-0.0420	-0.0700*
453	6.00	.000	9.8	3.60	20.0	.119	-0.3235	-0.3373
454	4.00	.000	9.8	3.60	20.0	.190	-0.2369	-0.2362
455	6.00	.000	19.7	2.60	20.0	.032	-0.1389	-0.1487
456	4.00	.000	14.8	2.60	20.0	.072	-0.0882	-0.1057
457	4.00	.000	19.8	1.60	20.0	.014	-0.0250	-0.0547*

TABLE A-12 (cont'd)

MEASURED AND FITTED LONGITUDINAL FORCE
BETA=20. DEG

RUN	CV	W	PHI	THETA	PSI	ZT	MEASURED	FITTED
459	4.00	.000	4.8	3.60	5.0	.077	-0.0650	-0.0718
211	2.07	.052	0.0	3.00	0.0	.106	-0.0435	-0.0316
212	2.96	.074	0.0	3.00	0.0	.079	-0.0625	-0.0506
213	3.92	.098	0.0	3.00	0.0	.070	-0.0924	-0.0641
214	5.00	.125	0.0	3.00	0.0	.056	-0.1137	-0.0790
215	5.96	.149	0.0	3.00	0.0	.047	-0.1931	-0.1315
216	2.94	.074	0.0	3.00	0.0	.069	-0.0554	-0.0434
217	3.01	.075	0.0	3.00	0.0	.106	-0.0898	-0.0728
218	3.02	.075	0.0	3.00	0.0	.146	-0.1315	-0.1068
219	3.97	.099	0.0	3.00	0.0	.122	-0.1732	-0.1423
220	4.00	.100	0.0	3.00	0.0	.147	-0.2135	-0.1846
221	5.00	.125	0.0	3.00	0.0	.120	-0.2584	-0.2349
222	4.95	.124	0.0	3.00	0.0	.146	-0.3214	-0.2934
223	5.96	.149	0.0	3.00	0.0	.116	-0.4409	-0.3685
224	3.00	.075	5.0	3.00	0.0	.074	-0.0574	-0.0479
225	2.97	.074	-5.0	3.00	0.0	.074	-0.0579	-0.0503
226	2.99	.075	-10.0	3.00	0.0	.069	-0.0628	-0.0532
227	2.99	.075	-15.0	3.00	0.0	.060	-0.0648	-0.0568
228	2.97	.074	-20.0	3.00	0.0	.048	-0.0700	-0.0606
229	2.95	.074	-27.5	3.00	0.0	.029	-0.0843	-0.0730
230	2.98	.074	0.0	3.00	5.0	.079	-0.0092	0.0045*
231	2.98	.074	0.0	3.00	-5.0	.078	-0.1066	-0.1052
232	2.94	.073	0.0	3.00	-10.0	.079	-0.1483	-0.1541
233	3.02	.075	0.0	3.00	-15.0	.078	-0.2083	-0.2135
234	3.01	.075	0.0	3.00	-20.0	.088	-0.2615	-0.2678
235	2.98	.075	0.0	2.00	0.0	.088	-0.0851	-0.0792
236	3.00	.075	0.0	4.00	0.0	.078	-0.0569	-0.0450
237	3.01	.075	0.0	5.00	0.0	.081	-0.0657	-0.0493
238	2.97	.074	0.0	6.00	0.0	.065	-0.0494	-0.0417
239	4.90	.123	5.0	2.00	0.0	.123	-0.3208	-0.2859
240	4.00	.100	-5.0	3.00	0.0	.125	-0.1737	-0.1533
241	5.99	.150	-15.0	5.00	-10.0	.014	-0.5463	-0.5505
242	5.99	.150	-27.5	6.00	-5.0	-.038	-0.3773	-0.3901
243	3.97	.099	-27.5	6.00	-20.0	-.046	-0.4025	-0.4112
244	2.99	.075	-5.0	3.00	-5.0	.077	-0.1105	-0.1093
245	4.91	.123	5.0	3.00	-20.0	.056	-0.6164	-0.6304
246	1.74	.044	-15.0	6.00	0.0	.155	-0.0444	-0.0558
247	3.90	.098	-10.0	2.00	-20.0	.111	-0.5371	-0.5317
248	4.96	.124	5.0	2.00	-5.0	.059	-0.2494	-0.2664
250	3.99	.100	-5.0	6.00	-20.0	.058	-0.4113	-0.4306
252	6.05	.151	-10.0	3.00	5.0	.105	-0.1637	-0.1435
254	3.98	.099	-20.0	4.00	-5.0	.104	-0.2828	-0.2617
255	2.99	.075	-10.0	3.00	-10.0	.136	-0.2189	-0.2156
256	2.97	.074	-5.0	3.00	-5.0	.079	-0.1100	-0.1095
259	5.02	.125	-20.0	4.00	5.0	.135	-0.1838	-0.1628
261	3.00	.075	-5.0	2.00	-10.0	.067	-0.1620	-0.1755
262	4.01	.100	-5.0	6.00	-15.0	.059	-0.3351	-0.3434
263	2.10	.053	-15.0	2.00	-20.0	.055	-0.1336	-0.1393
264	6.06	.152	5.0	3.00	-20.0	.052	-0.9788	-0.9944
265	6.09	.152	-15.0	2.00	-15.0	.027	-0.7971	-0.8277

TABLE A-12 (cont'd)

MEASURED AND FITTED LONGITUDINAL FORCE
BETA=20.DEG

RUN	CV	W	PHI	THETA	PSI	ZT	MEASURED	FITTED
266	4.00	.100	-10.0	5.00	-20.0	.086	-0.4888	-0.4806
267	4.93	.123	-15.0	2.00	-20.0	.063	-0.7445	-0.7495
268	2.98	.074	-5.0	3.00	-5.0	.078	-0.1086	-0.1091
269	2.03	.051	-15.0	4.00	-15.0	.069	-0.1034	-0.1101
270	5.97	.149	-5.0	5.00	5.0	.095	-0.5378	-0.0867*
271	4.95	.124	-10.0	2.00	-10.0	.056	-0.4095	-0.4289
272	5.93	.148	0.0	3.00	-5.0	.067	-0.4270	-0.4054
273	5.00	.125	-5.0	2.00	5.0	.069	-0.0112	0.0115*
274	5.95	.149	-5.0	3.00	0.0	.099	-0.3609	-0.3147
275	4.97	.124	-20.0	5.00	5.0	.040	-0.0083	0.0074*
276	5.98	.150	-25.0	5.00	-5.0	.031	-0.5135	-0.5063
278	5.62	.140	5.0	6.00	-15.0	.104	-0.7983	-0.7842
279	2.75	.069	-5.0	3.00	-5.0	.093	-0.0945	-0.1042
280	3.69	.092	-15.0	5.00	5.0	.021	0.0351	0.0482
282	4.09	.102	-20.0	4.00	-10.0	.083	-0.3625	-0.3521
283	4.92	.123	-10.0	2.00	-15.0	.066	-0.5281	-0.5893
284	2.06	.052	-20.0	3.00	5.0	.062	-0.0147	-0.0000*
285	4.84	.121	-25.0	5.00	-15.0	.025	-0.5561	-0.5765
312	2.26	.085	0.0	3.00	0.0	.095	-0.0519	-0.0332
313	3.20	.120	0.0	3.00	0.0	.084	-0.0706	-0.0572
314	4.29	.161	0.0	3.00	0.0	.055	-0.0706	-0.0523
315	5.24	.196	0.0	3.00	0.0	.046	-0.0864	-0.0860
316	6.14	.230	0.0	3.00	0.0	.037	-0.1024	-0.1607*
317	3.12	.117	0.0	3.00	0.0	.063	-0.0474	-0.0370
318	3.01	.113	0.0	3.00	0.0	.125	-0.0982	-0.0850
320	4.16	.155	0.0	3.00	0.0	.125	-0.1916	-0.1682
321	4.05	.152	0.0	3.00	0.0	.125	-0.1774	-0.1596
324	4.99	.187	0.0	3.00	0.0	.129	-0.2730	-0.2768
325	4.99	.187	0.0	3.00	0.0	.152	-0.3251	-0.3379
326	3.01	.113	5.0	3.00	0.0	.078	-0.0546	-0.0472
327	3.01	.113	-5.0	3.00	0.0	.081	-0.0565	-0.0534
328	2.99	.112	-10.0	3.00	0.0	.071	-0.0514	-0.0516
329	3.01	.113	-15.0	3.00	0.0	.051	-0.0507	-0.0482
330	3.02	.113	-20.0	3.00	0.0	.044	-0.0600	-0.0578
331	2.99	.112	-27.5	3.00	0.0	.021	-0.0694	-0.0690
332	2.95	.111	0.0	3.00	5.0	.041	0.0409	0.0631
333	3.05	.114	0.0	3.00	-5.0	.092	-0.1393	-0.1445
334	2.81	.106	0.0	3.00	-10.0	.097	-0.1827	-0.1985
335	2.81	.105	0.0	3.00	-15.0	.098	-0.2492	-0.2668
336	2.83	.106	0.0	3.00	-20.0	.068	-0.2969	-0.3194
337	2.87	.107	0.0	2.00	0.0	.105	-0.0905	-0.0851
338	2.90	.109	0.0	4.00	0.0	.078	-0.0444	-0.0392
341	3.06	.115	0.0	5.00	0.0	.081	-0.0568	-0.0458
346	1.90	.071	-20.0	4.00	5.0	.136	-0.0304	0.0059*
347	4.06	.152	-5.0	3.00	-5.0	.086	-0.2523	-0.2529
348	4.97	.186	5.0	4.00	-20.0	.086	-0.9381	-0.9866
349	4.99	.187	-15.0	4.00	5.0	.175	-0.1788	-0.1666
350	3.01	.113	-5.0	3.00	-5.0	.087	-0.1380	-0.1429
351	4.05	.152	-15.0	6.00	0.0	.019	-0.0728	-0.0546
352	5.94	.223	0.0	2.00	-5.0	.040	-0.4091	-0.4919

TABLE A-12 (cont'd)

MEASURED AND FITTED LONGITUDINAL FORCE
BETA=20. DEG

RUN	CV	W	PHI	THETA	PSI	ZT	MEASURED	FITTED
353	4.99	.187	-20.0	5.00	0.0	.072	-0.2229	-0.2298
355	5.00	.187	-20.0	5.00	0.0	.079	-0.2097	-0.2446
359	4.00	.150	-25.0	5.00	5.0	.098	-0.0564	-0.0495
360	4.00	.150	0.0	4.00	5.0	.209	-0.1367	-0.1152
361	5.99	.225	-25.0	5.00	-20.0	-.011	-1.3448	-1.4595
362	4.01	.150	-15.0	6.00	0.0	.016	-0.0450	-0.0489
363	4.04	.152	5.0	4.00	-10.0	.192	-0.5170	-0.5175
364	4.03	.151	-5.0	3.00	0.0	.129	-0.1817	-0.1669
365	2.97	.111	-5.0	3.00	-5.0	.091	-0.1172	-0.1419
366	4.97	.187	-10.0	6.00	-20.0	.055	-0.9101	-0.9888
370	5.52	.207	-5.0	3.00	-20.0	.090	-1.5010	-1.3153*
371	5.02	.188	5.0	3.00	0.0	.069	-0.1308	-0.1323
372	2.99	.112	5.0	2.00	-20.0	.094	-0.3698	-0.3889
373	1.97	.074	-20.0	6.00	-5.0	.187	-0.1299	-0.1211
374	2.92	.109	-20.0	6.00	-5.0	.105	-0.1827	-0.1914
376	5.00	.187	-5.0	2.00	0.0	.071	-0.1693	-0.1689
378	4.02	.151	0.0	6.00	-20.0	.126	-0.6711	-0.6786
379	6.01	.225	-20.0	2.00	0.0	.004	-0.1318	-0.1445
380	4.97	.187	-20.0	2.00	-5.0	.082	-0.5108	-0.5046
381	2.99	.112	-5.0	3.00	-5.0	.082	-0.1325	-0.1365
384	5.95	.223	-10.0	3.00	5.0	.094	0.0053	-0.0366*
386	4.85	.182	-15.0	3.00	-5.0	.092	-0.4253	-0.4347
387	5.12	.192	-5.0	3.00	-5.0	.114	-0.4726	-0.5020
390	6.10	.229	5.0	5.00	-15.0	.089	-1.1607	-1.2670
395	4.23	.158	-10.0	6.00	-5.0	.038	-0.2120	-0.2191
396	3.19	.119	-27.5	4.00	0.0	.128	-0.1688	-0.1562
397	3.15	.118	-5.0	4.00	-15.0	.097	-0.3123	-0.3297
398	4.10	.154	-5.0	5.00	5.0	.137	-0.0628	-0.0118*
399	3.07	.115	-5.0	3.00	-5.0	.061	-0.1227	-0.1265
402	6.06	.227	-10.0	2.00	5.0	.040	0.1548	0.1355
403	3.11	.117	-10.0	5.00	-10.0	.151	-0.3052	-0.2879
404	2.98	.112	-15.0	6.00	-10.0	.135	-0.2949	-0.2797
405	4.04	.151	-20.0	5.00	-10.0	.090	-0.4711	-0.4607
702	2.99	.224	0.0	3.00	0.0	.093	-0.0498	-0.0375
703	1.98	.149	0.0	3.00	0.0	.123	-0.0382	-0.0080*
704	2.49	.187	0.0	3.00	0.0	.103	-0.0364	-0.0227
705	3.01	.226	0.0	3.00	0.0	.071	-0.0275	-0.0177
706	2.99	.224	0.0	3.00	0.0	.115	-0.0651	-0.0595
707	2.99	.224	0.0	3.00	0.0	.176	-0.1163	-0.1250
709	3.01	.226	5.0	3.00	0.0	.085	-0.0390	-0.0294
710	3.01	.226	-5.0	3.00	0.0	.091	-0.0448	-0.0418
711	3.01	.226	-10.0	3.00	0.0	.076	-0.0477	-0.0370
712	3.00	.225	-15.0	3.00	0.0	.057	-0.0373	-0.0329
713	3.00	.225	-20.0	3.00	0.0	.028	-0.0279	-0.0260
714	3.00	.225	-27.5	3.00	0.0	.006	-0.0384	-0.0428
715	3.01	.226	0.0	3.00	5.0	.088	0.1123	0.1353
716	3.00	.225	0.0	3.00	-5.0	.099	-0.1920	-0.2100
717	3.01	.225	0.0	3.00	-10.0	.099	-0.3378	-0.3738
718	3.01	.225	0.0	3.00	-15.0	.103	-0.4888	-0.5353
719	3.01	.226	0.0	3.00	-20.0	.104	-0.6345	-0.6909

TABLE A-12 (cont'd)

MEASURED AND FITTED LONGITUDINAL FORCE
BETA=20.DEG

RUN	CV	W	PHI	THETA	PSI	ZT	MEASURED	FITTED
720	3.01	.226	0.0	2.00	0.0	.090	-0.0543	-0.0584
721	3.02	.226	0.0	4.00	0.0	.100	-0.0409	-0.0371
722	3.00	.225	0.0	5.00	0.0	.094	-0.0404	-0.0323
723	3.01	.226	0.0	6.00	0.0	.089	-0.0408	-0.0331
724	2.53	.190	0.0	6.00	-20.0	.084	-0.4509	-0.4502
726	2.53	.189	5.0	8.00	-5.0	.256	-0.2607	-0.2630
728	2.99	.224	-5.0	3.00	-5.0	.165	-0.2629	-0.2793
730	2.99	.224	-5.0	6.00	5.0	.267	-0.0464	-0.0405
731	1.95	.147	0.0	5.00	-10.0	.249	-0.2164	-0.1971
732	2.49	.187	-27.5	3.00	-10.0	-.010	-0.2271	-0.2541
733	3.00	.225	-5.0	3.00	-5.0	.100	-0.1964	-0.2182
735	1.97	.148	-27.5	3.00	-10.0	.079	-0.1813	-0.1631
736	3.00	.225	-20.0	3.00	5.0	.094	0.0719	0.0964
737	3.00	.225	-27.5	6.00	-10.0	.141	-0.4840	-0.5066
738	1.99	.149	-10.0	3.00	-15.0	.137	-0.2365	-0.2343
741	2.48	.186	0.0	3.00	-5.0	.132	-0.1512	-0.1548
743	2.53	.190	5.0	8.00	-10.0	.273	-0.3700	-0.3799
744	2.04	.153	-10.0	3.00	-10.0	.092	-0.1546	-0.1632
746	3.01	.226	-5.0	5.00	-20.0	.242	-0.7686	-0.7866
747	3.01	.226	-5.0	3.00	-5.0	.086	-0.1782	-0.2064
749	3.07	.230	-10.0	6.00	-5.0	.166	-0.2789	-0.2945
750	2.57	.193	5.0	5.00	0.0	.129	-0.0436	-0.0370
751	2.57	.193	-10.0	6.00	0.0	.067	-0.0229	-0.0285
752	2.07	.155	-27.5	3.00	-20.0	-.018	-0.2878	-0.3225
754	2.00	.150	5.0	6.00	0.0	.257	-0.0927	-0.0877
755	2.14	.160	-15.0	3.00	5.0	.120	0.1204	0.0665
757	2.51	.188	0.0	8.00	-20.0	.339	-0.6315	-0.6390
758	2.51	.189	-15.0	6.00	-15.0	.062	-0.3413	-0.3742
759	2.51	.188	5.0	6.00	-10.0	.280	-0.3621	-0.3554
760	3.00	.225	-5.0	3.00	-5.0	.094	-0.1813	-0.2118
761	3.00	.225	-15.0	5.00	0.0	.257	-0.1982	-0.2007
763	2.51	.188	-20.0	7.00	0.0	.301	-0.2111	-0.2121
764	2.99	.224	0.0	5.00	-5.0	.103	-0.1849	-0.1981
765	2.99	.224	-5.0	5.00	-15.0	.183	-0.5575	-0.5820
766	2.02	.151	0.0	5.00	5.0	.372	-1.0166	-0.1020*
769	2.51	.188	-10.0	8.00	-15.0	.234	-0.4983	-0.4853
771	3.00	.225	-10.0	2.00	5.0	.107	0.0847	0.0901
772	3.00	.225	-25.0	5.00	-10.0	.151	-0.4637	-0.4827
773	2.98	.224	-5.0	3.00	-5.0	.103	-0.1896	-0.2166
774	2.49	.186	-10.0	4.00	0.0	.251	-0.1329	-0.1223
775	2.98	.224	-10.0	6.00	-5.0	.176	-0.2767	-0.2858
777	2.49	.187	5.0	8.00	-10.0	.330	-0.4087	-0.4205
780	2.97	.223	-25.0	6.00	-5.0	.212	-0.3483	-0.3710
781	2.48	.186	-25.0	5.00	-20.0	.104	-0.5112	-0.5209

MEAN ERROR= -0.0129
STANDARD DEVIATION= 0.1385

TABLE A-13

MEASURED AND FITTED VERTICAL FORCE
BETA=10.DEG

RUN	CV	W	PHI	THETA	PSI	ZT	MEASURED	FITTED
3	4.00	.000	2.1	2.60	0.0	.043	-0.1521	-0.1724
5	4.00	.000	4.6	2.50	0.0	.035	-0.1521	-0.1297
6	4.00	.000	7.2	2.60	0.0	.139	-0.1521	-0.9152*
7	4.00	.000	9.7	2.50	0.0	.020	-0.1521	-0.1062
8	4.00	.000	12.2	2.40	0.0	.011	-0.1521	-0.1119
1	4.00	.000	4.7	2.50	5.0	.028	-0.1521	-0.0930
9	4.00	.000	0.0	2.60	-5.0	.046	-0.1521	-0.1871
10	4.00	.000	0.0	2.60	5.0	.046	-0.1521	-0.1892
11	4.00	.000	0.0	2.60	10.0	.048	-0.1521	-0.2034
12	4.00	.000	0.1	2.60	15.0	.047	-0.1521	-0.2069
13	4.00	.000	0.1	2.60	20.0	.046	-0.1521	-0.1956
24	4.00	.000	5.1	2.80	0.0	.039	-0.1521	-0.1726
34	5.00	.000	2.4	2.40	-5.0	.076	-0.6085	-0.5349
36	2.00	.000	7.4	5.50	-5.0	.287	-0.9127	-0.9485
37	3.00	.000	5.0	4.50	20.0	.058	-0.3042	-0.3605
40	4.00	.000	12.4	4.50	20.0	.007	-0.3042	-0.3279
41	3.00	.000	5.0	4.50	20.0	.031	-0.0761	-0.2147*
42	2.00	.000	10.0	4.50	20.0	.079	-0.3042	-0.3429
43	2.00	.000	10.0	4.50	20.0	.056	-0.0761	-0.2882*
44	5.00	.000	7.4	4.50	20.0	.019	-0.0761	-0.3751*
45	2.00	.000	12.4	4.50	20.0	.124	-0.6085	-0.5609
46	3.00	.000	10.0	3.50	20.0	.110	-0.3042	-0.7646*
47	4.00	.000	10.0	2.50	20.0	.042	-0.0761	-0.3813*
48	4.00	.000	0.1	6.50	20.0	.111	-0.0761	-1.1093*
49	6.00	.000	9.9	2.40	20.0	.034	-0.6085	-0.6560
50	4.00	.000	4.9	5.60	20.0	.243	-0.9127	-2.0319*
51	3.00	.000	0.0	5.50	20.0	.059	-0.3042	-0.2657
52	4.00	.000	7.5	2.50	20.0	.056	-0.3042	-0.4423
53	4.00	.000	2.4	3.50	20.0	.112	-0.9127	-0.8386
54	3.00	.000	2.5	5.50	20.0	.033	-0.0761	-0.1945*
55	5.00	.000	0.1	6.50	10.0	.045	-0.6085	-0.6217
56	2.00	.000	10.0	4.60	10.0	.030	-0.0761	-0.2011*
57	4.00	.000	5.0	2.50	10.0	.036	-0.1521	-0.1717
58	3.00	.000	12.5	6.50	10.0	-.005	-0.0761	-0.1052
59	4.00	.000	2.5	3.60	5.0	.040	-0.1521	-0.1997
60	4.00	.000	2.5	3.60	5.0	.029	-0.0761	-0.1146
61	4.00	.000	5.1	3.50	5.0	.043	-0.3042	-0.2583
62	3.00	.000	0.0	2.50	5.0	.054	-0.1[illegible]	-0.1629
63	5.00	.000	2.5	2.50	5.0	.035	-0.1521	-0.1272
64	3.00	.000	9.9	2.60	5.0	.013	-0.0761	-0.0924
65	4.00	.000	5.0	2.60	5.0	.039	-0.1521	-0.1822
66	5.00	.000	5.0	6.60	5.0	.022	-0.1521	-0.2639*
67	3.00	.000	9.9	6.60	5.0	.020	-0.0761	-0.1998*
68	6.00	.000	12.4	5.70	5.0	-.006	-0.0761	0.0596*
69	3.00	.000	-5.1	6.60	5.0	.240	-1.2169	-1.1211
70	6.00	.000	-5.1	5.70	5.0	.016	-0.0761	0.0219*
71	6.00	.000	7.4	5.60	5.0	.012	-0.0761	-0.0590
72	4.00	.000	12.4	5.60	5.0	.102	-1.2169	-1.2807
73	2.00	.000	0.0	5.60	5.0	.060	-0.1521	-0.2228
74	4.00	.000	2.4	3.60	5.0	.041	-0.1521	-0.2069

TABLE A-13 (cont'd)

MEASURED AND FITTED VERTICAL FORCE
BETA=10.DEG

RUN	CV	W	PHI	THETA	PSI	ZT	MEASURED	FITTED
76	5.00	.000	2.4	5.60	0.0	.026	-0.0761	-0.1938*
77	2.00	.000	4.9	5.70	0.0	.329	-1.2169	-1.1777
78	6.00	.000	7.5	5.70	0.0	.015	-0.1521	-0.0632
79	3.00	.000	12.4	5.60	0.0	.112	-0.6085	-0.6852
80	3.00	.000	12.4	5.60	0.0	.247	-1.2169	-1.1582
81	4.00	.000	12.4	4.60	0.0	.117	-0.9127	-1.0549
82	4.00	.000	4.9	6.60	0.0	.099	-1.2169	-1.0982
83	3.00	.000	-5.1	6.60	0.0	.049	-0.3042	-0.3249
84	3.00	.000	2.4	2.60	0.0	.044	-0.0761	-0.1315*
85	4.00	.000	7.4	2.60	-5.0	.026	-0.1521	-0.0909
87	2.00	.000	4.9	2.60	-5.0	.135	-0.3042	-0.3534
88	4.00	.000	4.9	2.60	-5.0	.061	-0.3042	-0.2965
89	2.00	.000	7.4	5.70	-5.0	.285	-0.9127	-0.9092
90	6.00	.000	7.5	6.70	-5.0	.014	-0.1521	-0.0423*
91	2.00	.000	0.0	4.60	-5.0	.119	-0.3042	-0.3277
92	5.00	.000	0.0	3.60	-5.0	.037	-0.1521	-0.1947
93	6.00	.000	9.9	3.50	-5.0	.110	-1.2169	-1.3096
94	6.00	.000	9.9	4.60	-5.0	.078	-1.2169	-1.1530
95	6.00	.000	10.0	5.60	-5.0	.002	-0.0761	0.1469*
97	4.00	.000	9.9	5.60	-5.0	.037	-0.3042	-0.3031
98	5.00	.000	9.9	5.50	-5.0	.097	-1.2169	-1.2413
99	3.00	.000	0.1	6.60	-5.0	.142	-0.9127	-0.9573
100	4.00	.000	4.9	6.60	-5.0	.034	-0.3042	-0.2591
101	4.00	.000	2.4	3.50	5.0	.039	-0.1521	-0.1892
102	6.00	.000	9.9	2.50	0.0	.105	-1.2169	-1.1994
103	3.00	.000	-5.1	2.50	10.0	.122	-0.3042	-0.4216
105	5.00	.000	10.0	3.50	10.0	.013	-0.3042	-0.1672
106	4.00	.000	5.0	3.50	10.0	.045	-0.3042	-0.2990
107	3.00	.000	7.4	6.50	10.0	.158	-1.2169	-1.2653
108	4.00	.000	12.5	6.60	10.0	-.006	-0.1521	-0.1085
109	2.00	.000	-5.1	6.60	10.0	.057	-0.1521	-0.1381
110	3.00	.000	2.4	6.50	10.0	.077	-0.6085	-0.5676
111	3.00	.000	-5.1	5.60	10.0	.135	-0.6085	-0.6257
112	3.00	.000	12.5	5.60	10.0	.006	-0.1521	-0.2030
113	4.00	.000	2.4	3.60	5.0	.038	-0.1521	-0.1846
114	4.00	.000	0.0	3.50	15.0	.042	-0.1521	-0.1935
115	4.00	.000	12.5	3.60	15.0	.001	-0.0761	-0.1405*
116	3.00	.000	7.4	2.60	15.0	.139	-0.9127	-0.8166
117	4.00	.000	7.4	2.50	15.0	.030	-0.1521	-0.1894
118	3.00	.000	5.0	2.50	15.0	.067	-0.3042	-0.2685
119	3.00	.000	2.4	2.50	15.0	.057	-0.1521	-0.1890
120	6.00	.000	2.4	2.50	15.0	.069	-0.9127	-0.7840
121	3.00	.000	0.0	2.60	15.0	.172	-0.9127	-0.8713
126	6.00	.000	4.9	2.50	20.0	.065	-0.9127	-0.9859
127	4.00	.000	5.0	2.60	20.0	.137	-1.2169	-1.1261
128	6.00	.000	12.5	5.50	20.0	.022	-1.2169	-1.1835
129	2.00	.000	12.5	6.60	0.0	.057	-0.1521	-0.1555
130	5.00	.000	6.6	****	7.5	-.181	-0.1521	-0.1323
131	6.00	.000	-5.0	6.70	0.0	.022	-0.1521	-0.2279
132	3.00	.000	9.9	3.60	0.0	.148	-0.6085	-0.6831

TABLE A-13 (cont'd)

MEASURED AND FITTED VERTICAL FORCE
BETA=10.DEG

RUN	CV	W	PHI	THETA	PSI	ZT	MEASURED	FITTED
133	4.00	.000	7.4	3.60	5.0	.145	-1.2169	-1.1174
134	3.00	.000	9.9	3.70	5.0	.224	-1.2169	-1.2959
135	4.00	.000	2.4	3.60	5.0	.040	-0.1521	-0.1978
138	4.00	.000	-5.0	5.60	20.0	.221	-0.9127	-1.0321
139	4.00	.000	-5.1	3.60	5.0	.044	-0.3042	-0.2097
1	1.97	.049	0.0	3.00	0.0	.057	-0.1521	-0.1395
2	1.98	.050	0.0	3.00	0.0	.058	-0.1521	-0.1392
3	3.15	.079	0.0	3.00	0.0	.029	-0.1521	-0.0806
4	4.01	.100	0.0	3.00	0.0	.022	-0.1521	-0.0419*
6	5.30	.133	0.0	3.00	0.0	.033	-0.1521	-0.2045
8	6.00	.150	0.0	3.00	0.0	.032	-0.1521	-0.2067
10	3.01	.075	-2.5	3.00	0.0	.042	-0.1521	-0.1336
9	3.12	.078	5.0	3.00	0.0	.038	-0.1521	-0.0934
11	3.02	.076	-5.0	3.00	0.0	.037	-0.1521	-0.1319
12	2.95	.074	-7.5	3.00	0.0	.033	-0.1521	-0.1283
13	2.98	.075	-10.0	3.00	0.0	.032	-0.1521	-0.1430
14	2.96	.074	-12.5	3.00	0.0	.026	-0.1521	-0.1374
15	2.95	.074	0.0	2.00	0.0	.064	-0.1521	-0.1965
16	2.99	.075	0.0	4.00	0.0	.047	-0.1521	-0.1637
19	2.72	.068	0.0	5.00	0.0	.041	-0.1521	-0.1690
20	2.68	.067	0.0	5.00	0.0	.041	-0.1521	-0.1695
21	3.14	.079	0.0	6.00	0.0	.033	-0.1521	-0.1767
22	2.01	.050	-7.5	6.00	0.0	.089	-0.3042	-0.2664
23	2.98	.074	[illegible]	3.00	0.0	.025	-0.0761	-0.0742
24	2.97	.074	0.0	3.00	0.0	.072	-0.3042	-0.2340
25	2.46	.062	0.0	3.00	0.0	.151	-0.6085	-0.5795
26	3.46	.087	0.0	3.00	0.0	.103	-0.6085	-0.5135
27	2.96	.074	0.0	3.00	0.0	.127	-0.6085	-0.5389
28	2.93	.073	0.0	3.00	0.0	.181	-0.9127	-0.9061
30	4.49	.112	0.0	3.00	0.0	.193	-0.9127	-1.4121*
31	5.03	.126	0.0	3.00	0.0	.115	-1.2169	-1.0676
32	3.15	.079	0.0	3.00	-5.0	.055	-0.1521	-0.1837
34	3.07	.077	-2.5	3.00	-5.0	.054	-0.1521	-0.1962
35	5.82	.146	0.0	3.00	-5.0	.049	-0.3042	-0.4546
36	5.77	.144	-12.5	6.00	-5.0	.008	-0.3042	-0.3588
37	4.91	.123	5.0	2.00	-5.0	.040	-0.1521	-0.2278
38	2.87	.072	-10.0	4.00	-5.0	.157	-0.9127	-0.8787
39	5.96	.149	-12.5	5.00	-5.0	.045	-1.2169	-1.2137
40	3.00	.075	0.0	3.00	-10.0	.135	-0.1521	-0.6051*
41	6.02	.150	-7.5	5.00	-10.0	.025	-0.0761	-0.4387*
42	2.95	.074	-2.5	2.00	-10.0	.057	-0.0761	-0.2155*
43	5.21	.130	-5.0	2.00	-10.0	.022	-0.1521	-0.1657
46	3.09	.077	-5.0	2.00	-10.0	.092	-0.6085	-0.4691
47	3.14	.079	-2.5	3.00	-5.0	.036	-0.1521	-0.1251
48	3.09	.077	0.0	3.00	-15.0	.041	-0.1521	-0.1101
56	5.23	.131	-5.0	3.00	-15.0	.060	-1.2169	-0.7704*
57	5.19	.130	-5.0	2.00	-15.0	.027	-0.1521	-0.2854*
58	5.12	.128	-12.5	5.00	-15.0	.027	-1.2169	-0.7543*
59	3.05	.076	0.0	3.00	-20.0	.048	-0.1521	-0.1173
60	4.17	.104	-12.5	6.00	-20.0	-.007	-0.0761	-0.0382

TABLE A-13 (cont'd)

MEASURED AND FITTED VERTICAL FORCE
BETA=10.DEG

RUN	CV	W	PHI	THETA	PSI	ZT	MEASURED	FITTED
62	5.18	.129	5.0	3.00	-20.0	.022	-0.0761	-0.0894
65	4.10	.102	-2.5	6.00	-20.0	.033	-0.0761	-0.1922*
66	6.15	.154	-10.0	5.00	-20.0	.004	-0.1521	-0.1699
67	2.11	.053	-7.5	2.00	-20.0	.046	-0.1521	-0.2124
69	4.05	.101	-5.0	5.00	-20.0	.047	-0.6085	-0.4595
70	3.01	.075	-7.5	2.00	-20.0	.076	-0.9127	-0.4519*
71	3.00	.075	0.0	3.00	5.0	.038	-0.1521	-0.1043
72	6.08	.152	-5.0	3.00	5.0	.057	-0.9127	-0.7913
74	5.05	.126	-10.0	3.00	5.0	.108	-0.9127	-1.2249*
75	6.03	.151	-2.5	5.00	5.0	.047	-1.2169	-0.8320*
76	5.05	.126	-2.5	2.00	5.0	.038	-0.3042	-0.2641
77	5.05	.126	-10.0	5.00	5.0	.031	-0.6085	-0.5105
78	4.02	.101	-7.5	5.00	5.0	.008	-0.0761	0.0150*
79	2.04	.051	-10.0	3.00	5.0	.016	-0.0761	-0.1169
80	5.33	.133	-2.5	3.00	0.0	.061	-0.9127	-0.6030*
82	3.87	.097	-2.5	2.00	0.0	.099	-0.6085	-0.6015
83	3.02	.075	-2.5	3.00	-5.0	.038	-0.1521	-0.1303
418	1.85	.069	0.0	3.00	0.0	.060	-0.1521	-0.1298
419	2.96	.111	0.0	3.00	0.0	.044	-0.1521	-0.1144
420	3.95	.148	0.0	3.00	0.0	.033	-0.1521	-0.1405
421	5.02	.188	0.0	3.00	0.0	.025	-0.1521	-0.2009
422	6.09	.228	0.0	3.00	0.0	.022	-0.1521	-0.2924*
423	3.86	.145	0.0	3.00	0.0	.028	-0.0761	-0.0961
424	3.91	.146	0.0	3.00	0.0	.045	-0.3042	-0.2287
425	3.96	.148	0.0	3.00	0.0	.067	-0.6085	-0.4074*
426	4.03	.151	0.0	3.00	0.0	.117	-0.9127	-0.8310
427	4.01	.150	0.0	3.00	0.0	.158	-1.2169	-1.1262
428	3.99	.150	5.0	3.00	0.0	.027	-0.1521	-0.0892
429	4.02	.151	-2.5	3.00	0.0	.031	-0.1521	-0.1632
430	3.99	.150	-5.0	3.00	0.0	.027	-0.1521	-0.1662
431	4.01	.150	-7.5	3.00	0.0	.017	-0.1521	-0.1402
432	4.00	.150	-10.0	3.00	0.0	.011	-0.1521	-0.1606
433	4.01	.150	-12.5	3.00	0.0	.006	-0.1521	-0.2081
434	3.99	.150	-12.5	3.00	5.0	.007	-0.1521	-0.2000
435	4.00	.150	-12.5	3.00	-5.0	-.002	-0.1521	-0.1386
436	4.02	.151	-12.5	3.00	-10.0	-.004	-0.1521	-0.1146
438	3.97	.149	0.0	3.00	5.0	.032	-0.1521	-0.1410
440	4.01	.150	0.0	3.00	-5.0	.035	-0.1521	-0.1570
441	4.00	.150	0.0	3.00	-10.0	.036	-0.1521	-0.1604
443	3.98	.149	0.0	3.00	-15.0	.040	-0.1521	-0.1780
444	3.98	.149	0.0	3.00	-20.0	.035	-0.1521	-0.1281
445	3.98	.149	0.0	2.00	0.0	.036	-0.1521	-0.1555
446	3.98	.149	0.0	4.00	0.0	.032	-0.1521	-0.1767
448	4.02	.151	0.0	5.00	0.0	.025	-0.1521	-0.1573
449	4.03	.151	0.0	6.00	0.0	.024	-0.1521	-0.1847
451	1.81	.068	-10.0	4.00	5.0	.132	-0.3042	-0.1624
452	4.01	.150	-2.5	3.00	-5.0	.043	-0.3042	-0.2620
455	4.91	.184	5.0	4.00	-20.0	.131	-0.6085	-1.0976*
456	4.90	.184	-7.5	4.00	5.0	.099	-1.2169	-1.2696
457	2.92	.109	-2.5	3.00	-5.0	.043	-0.1521	-0.1391

TABLE A-13 (cont'd)

MEASURED AND FITTED VERTICAL FORCE
BETA=10.DEG

RUN	CV	W	PHI	THETA	PSI	ZT	MEASURED	FITTED
458	4.00	.150	-7.5	6.00	0.0	.010	-0.1521	-0.0083*
459	5.96	.224	0.0	2.00	-5.0	.025	-0.1521	-0.2859*
460	5.01	.188	-10.0	5.00	0.0	.045	-0.9127	-0.8653
463	4.02	.151	-12.5	3.00	5.0	.110	-0.6085	-0.9482*
465	5.97	.224	0.0	2.00	5.0	.090	-1.2169	-1.2669
466	5.97	.224	-12.5	5.00	-20.0	.011	-1.2169	-0.5896*
467	4.00	.150	-7.5	6.00	0.0	.011	-0.0761	-0.0215*
469	5.05	.189	5.0	4.00	-10.0	.083	-0.9127	-0.8726
470	3.01	.113	-2.5	3.00	0.0	.131	-0.6085	-0.[illegible]46
471	2.99	.112	-2.5	3.00	-5.0	.047	-0.1521	-0.[illegible]82
473	4.96	.186	-5.0	6.00	-20.0	.024	-0.1521	-0.2163
475	4.97	.186	-2.5	2.00	-20.0	.086	-1.2169	-1.1197
476	4.97	.186	5.0	3.00	0.0	.031	-0.3042	-0.2594
483	1.98	.074	-10.0	6.00	-5.0	.168	-0.6085	-0.6349
484	2.91	.109	-2.5	2.00	0.0	.089	-0.3042	-0.3304
485	3.01	.113	0.0	6.00	-20.0	.133	-0.9127	-0.6960*
487	3.93	.148	-10.0	2.00	-5.0	.097	-0.9127	-0.9377
488	3.00	.113	-2.5	3.00	-5.0	.043	-0.1521	-0.1453
489	4.13	.155	-5.0	2.00	5.0	.112	-0.9127	-0.8508
490	6.08	.228	-5.0	2.00	5.0	.081	-0.9127	-1.3747*
491	4.10	.154	-7.5	3.00	-5.0	.075	-0.9127	-0.7029*
492	4.04	.152	0.0	3.00	0.0	.028	-0.0761	-0.1093
494	3.18	.119	-2.5	4.00	-5.0	.140	-0.9127	-0.7850
496	6.07	.228	5.0	5.00	-15.0	.074	-1.2169	-1.1946
499	6.05	.227	-10.0	5.00	-15.0	.001	-0.0761	-0.0737
500	4.08	.153	-5.0	6.00	-5.0	.015	-0.0761	-0.0522
502	3.09	.116	-12.5	4.00	0.0	.105	-0.6085	-0.5906
503	3.10	.116	-2.5	4.00	-15.0	.053	-0.3042	-0.2192
505	3.03	.114	-2.5	5.00	5.0	.161	-0.9127	-0.8546
506	3.02	.113	-2.5	3.00	-5.0	.041	-0.1521	-0.1370
507	3.01	.113	-5.0	2.00	5.0	.092	-0.3042	-0.3507
508	2.99	.112	-5.0	5.00	-10.0	.104	-0.9127	-0.6363
512	2.01	.075	-7.5	6.00	-10.0	.220	-0.9127	-0.9900
513	5.15	.193	-10.0	5.00	-10.0	.042	-1.2169	-0.8918*
514	5.10	.191	-12.5	2.00	-10.0	-.016	-0.0761	-0.0667
795	3.00	.225	0.0	3.00	0.0	.055	-0.1521	-0.1163
796	2.99	.224	5.0	3.00	0.0	.047	-0.1521	-0.0081*
797	3.01	.226	-2.5	3.00	0.0	.056	-0.1521	-0.1560
798	3.00	.225	-5.0	3.00	0.0	.051	-0.1521	-0.1663
799	3.01	.226	-7.5	3.00	0.0	.046	-0.1521	-0.1786
800	3.00	.225	-10.0	3.00	0.0	.039	-0.1521	-0.1805
801	3.00	.225	-12.5	3.00	0.0	.033	-0.1521	-0.1882
802	2.99	.224	0.0	3.00	5.0	.054	-0.1521	-0.0936
803	2.99	.224	0.0	3.00	-5.0	.068	-0.1521	-0.1896
804	2.98	.223	0.0	3.00	-10.0	.072	-0.1521	-0.2074
805	2.99	.224	0.0	3.00	-15.0	.075	-0.1521	-0.2177
806	3.00	.225	0.0	3.00	-20.0	.069	-0.1521	-0.1677
807	3.00	.225	0.0	2.00	0.0	.067	-0.1521	-0.1695
808	2.97	.223	0.0	4.00	0.0	.058	-0.1521	-0.1645
809	3.00	.225	0.0	5.00	0.0	.053	-0.1521	-0.2004

TABLE A-13 (cont'd)

MEASURED AND FITTED VERTICAL FORCE
BETA=10.DEG

RUN	CV	W	PHI	THETA	PSI	ZT	MEASURED	FITTED
810	2.99	.224	0.0	6.00	0.0	.056	-0.1521	-0.2823
811	3.00	.225	0.0	3.00	0.0	.051	-0.0761	-0.0969
812	3.00	.225	0.0	3.00	0.0	.082	-0.3042	-0.2675
813	3.00	.225	0.0	3.00	0.0	.130	-0.6085	-0.6012
815	2.01	.151	0.0	3.00	0.0	.104	-0.1521	-0.1621
816	2.51	.188	-2.5	3.00	0.0	.069	-0.1521	-0.1206
817	3.01	.226	0.0	6.00	-20.0	.066	-0.0761	-0.1062
818	3.02	.226	5.0	6.00	-5.0	.175	-0.9127	-1.0134
819	3.02	.226	-2.5	6.00	5.0	.211	-1.2169	-1.2805
820	2.03	.152	0.0	4.00	-10.0	.205	-0.6085	-0.8205
821	3.01	.226	-12.5	3.00	-10.0	.017	-0.0761	-0.1782
822	3.01	.226	-2.5	3.00	-5.0	.065	-0.1521	-0.2308
823	2.02	.152	-12.5	3.00	-10.0	.093	-0.3042	-0.2665
824	2.52	.189	-10.0	3.00	5.0	.111	-0.3042	-0.3078
825	2.01	.150	-5.0	3.00	-15.0	.112	-0.3042	-0.3464
826	2.48	.186	-12.5	6.00	-10.0	.190	-1.2169	-1.1867
827	2.48	.186	-12.5	5.00	5.0	.281	-1.2169	-1.1153
828	2.99	.224	0.0	3.00	-5.0	.084	-0.3042	-0.2833
829	1.99	.149	5.0	6.00	-10.0	.287	-0.9127	-0.8552
830	2.00	.150	-5.0	3.00	-10.0	.076	-0.0761	-0.1593
831	2.50	.187	-2.5	5.00	-20.0	.248	-1.2169	-1.3507
832	2.99	.224	-2.5	3.00	-5.0	.065	-0.1521	-0.2261
833	1.96	.147	-5.0	6.00	-5.0	.263	-0.9127	-1.0658
834	2.95	.221	5.0	5.00	0.0	.063	-0.3042	-0.2534
835	2.96	.222	-5.0	6.00	0.0	.034	-0.0761	-0.0694
836	1.98	.148	-12.5	3.00	-20.0	.019	-0.0761	-0.1695
839	2.06	.155	5.0	4.00	0.0	.192	-0.6085	-0.6212
840	2.03	.153	-7.5	3.00	5.0	.088	-0.1521	-0.0821
841	2.98	.223	0.0	5.00	-20.0	.219	-1.2169	-1.1895
842	2.99	.224	-7.5	6.00	-15.0	.031	-0.0761	-0.0385
845	2.98	.223	5.0	6.00	-10.0	.174	-0.9127	-0.8568
846	3.01	.226	-2.5	3.00	-5.0	.053	-0.1521	-0.1583
847	2.54	.190	-7.5	5.00	0.0	.242	-1.2169	-1.1937
848	3.01	.226	-10.0	5.00	0.0	.204	-1.2169	-1.2913
849	2.55	.191	0.0	5.00	-5.0	.046	-0.1521	-0.0667
850	2.54	.191	-2.5	4.00	-15.0	.180	-0.9127	-0.9114
851	2.08	.156	0.0	5.00	5.0	.038	-0.0761	-0.0709
852	2.53	.190	5.0	6.00	-20.0	.212	-0.6085	-0.5490
853	2.05	.154	-5.0	8.00	-15.0	.288	-1.2169	-1.1789
855	3.01	.226	-5.0	2.00	5.0	.074	-0.3042	-0.2716
856	2.53	.190	-12.5	4.00	-10.0	.182	-1.2169	-1.2037
857	3.00	.225	-2.5	3.00	-5.0	.049	-0.1521	-0.1381
858	2.99	.224	-5.0	4.00	0.0	.157	-0.9127	-0.8977
859	2.53	.190	-5.0	6.00	-5.0	.169	-0.9127	-0.8704
861	2.54	.190	-12.5	4.00	-5.0	.209	-1.2169	-1.2790
862	2.97	.223	-12.5	5.00	-20.0	.057	-0.9127	-0.4631
863	3.00	.225	-5.0	4.00	-5.0	.026	-0.0761	-0.0419

MEAN ERROR= 0.0022
STANDARD DEVIATION= 0.0944

TABLE A-14

MEASURED AND FITTED VERTICAL FORCE
BETA=15.DEG

RUN	CV	W	PHI	THETA	PSI	ZT	MEASURED	FITTED
141	4.00	.000	5.0	3.60	5.0	.050	-0.1521	-0.1654
143	3.00	.000	4.7	2.60	0.0	.053	-0.0761	-0.0533
144	6.00	.000	14.8	3.00	0.0	.149	-1.2169	-1.0412
145	4.00	.000	4.8	3.60	0.0	.050	-0.1521	-0.1363
146	4.00	.000	-5.2	3.60	0.0	.050	-0.1521	-0.1395
153	2.00	.000	-2.1	3.60	0.0	.114	-0.1521	-0.2003
157	4.00	.000	9.8	3.60	0.0	.035	-0.1521	-0.0778*
158	4.00	.000	14.7	3.60	0.0	.014	-0.1521	-0.0469*
159	3.00	.000	14.7	3.60	0.0	.169	-0.6085	-0.7424
160	4.00	.000	19.8	3.60	0.0	-.005	-0.1521	-0.1307
161	4.00	.000	19.8	4.60	0.0	.155	-0.9127	-1.0123
162	4.00	.000	19.7	4.60	0.0	.162	-0.9127	-1.0360
165	2.00	.000	4.7	5.60	0.0	.371	-1.2169	-1.2178
166	6.00	.000	9.7	5.60	0.0	.029	-0.1521	-0.0581
167	3.00	.000	19.7	5.60	0.0	.161	-0.6085	-0.9639*
168	3.00	.000	19.7	5.60	0.0	.280	-1.2169	-1.1134*
169	2.00	.000	19.7	6.60	0.0	.067	-0.1521	-0.7129
170	5.00	.000	9.7	6.60	0.0	.030	-0.1521	-0.1420
171	4.00	.000	9.7	6.60	0.0	.147	-1.2169	-1.1247
172	3.00	.000	-5.3	6.60	0.0	.082	-0.3042	-0.3460
174	6.00	.000	-5.2	6.60	0.0	.039	-0.1521	-0.1361*
175	4.00	.000	4.7	3.60	5.0	.061	-0.1521	-0.2572*
185	4.00	.000	4.7	3.60	5.0	.046	-0.0761	-0.1339
186	4.00	.000	-0.3	3.60	5.0	.065	-0.1521	-0.2420
187	3.00	.000	-5.3	3.60	5.0	.119	-0.3042	-0.3721*
189	5.00	.000	-0.3	2.50	5.0	.063	-0.1521	-0.2590*
191	4.00	.000	9.8	3.60	5.0	.173	-1.2169	-1.1517
192	4.00	.000	9.7	3.60	5.0	.177	-1.2169	-1.1703
193	3.00	.000	14.7	3.70	5.0	.250	-1.2169	-1.3105
194	3.00	.000	14.7	3.60	5.0	.017	-0.0761	-0.1926*
195	3.00	.000	14.7	1.60	5.0	.048	-0.0761	-0.3157*
196	6.00	.000	-5.2	5.60	5.0	.035	-0.0761	-0.2409*
197	6.00	.000	9.7	5.60	5.0	.026	-0.0761	-0.0964*
198	6.00	.000	19.8	5.60	5.0	-.016	-0.0761	0.4122
199	2.00	.000	-0.3	5.60	5.0	.101	-0.1521	-0.1728
200	2.00	.000	-5.3	5.60	5.0	.257	-0.6085	-0.7096
201	4.00	.000	19.8	5.60	5.0	.139	-1.2169	-1.3202*
202	5.00	.000	14.7	6.60	5.0	.010	-0.0761	-0.0398*
203	5.00	.000	4.7	6.60	5.0	.036	-0.1521	-0.2313
204	5.00	.000	4.8	6.60	5.0	.037	-0.1521	-0.2419
205	3.00	.000	-5.3	6.60	5.0	.279	-1.2169	-1.2178
206	4.00	.000	4.7	3.60	5.0	.055	-0.1521	-0.2038
207	4.00	.000	-0.3	3.60	-5.0	.063	-0.1521	-0.2269
208	6.00	.000	14.7	3.60	-5.0	.155	-1.2169	-0.8961
210	5.00	.000	-0.3	2.50	-5.0	.103	-0.6085	-0.6348
211	4.00	.000	4.7	2.60	-5.0	.094	-0.3042	-0.3575
212	2.00	.000	4.7	2.60	-5.0	.162	-0.3042	-0.4229
213	4.00	.000	9.8	2.60	-5.0	.043	-0.1521	-0.0227*
214	2.00	.000	-0.3	4.60	-5.0	.170	-0.3042	-0.4126
215	6.00	.000	14.8	4.60	-5.0	.126	-1.2169	-0.9500

TABLE A-14 (cont'd)

MEASURED AND FITTED VERTICAL FORCE
BETA=15.DEG

RUN	CV	W	PHI	THETA	PSI	ZT	MEASURED	FITTED
216	5.00	.000	14.7	5.50	-5.0	.150	-1.2169	-1.1467
218	3.00	.000	9.7	5.60	-5.0	.242	-0.9127	-0.9781*
219	4.00	.000	9.7	5.60	-5.0	.045	-0.3042	-0.3057
220	6.00	.000	14.8	5.60	-5.0	.007	-0.0761	-0.0452
221	6.00	.000	14.8	6.60	-5.0	.005	-0.1521	-0.0516
222	4.00	.000	9.7	6.60	-5.0	.044	-0.3042	-0.3371
223	3.00	.000	19.7	6.60	10.0	-.009	-0.0761	-0.4465
224	4.00	.000	19.7	6.60	10.0	-.014	-0.1521	-0.2314
225	2.00	.000	-5.3	6.60	10.0	.104	-0.1521	-0.2030
226	3.00	.000	4.7	6.60	10.0	.117	-0.6085	-0.7184
227	5.00	.000	-0.3	6.50	10.0	.070	-0.6085	-0.9117
228	3.00	.000	14.8	6.60	10.0	.191	-1.2169	-1.4478
231	3.00	.000	19.8	4.60	10.0	.179	-1.2169	-1.3666
232	5.00	.000	14.7	4.50	10.0	.035	-0.6085	-0.4730
233	2.00	.000	14.7	4.60	10.0	.037	-0.0761	-0.4336
234	4.00	.000	4.8	3.60	5.0	.054	-0.1521	-0.2034
235	5.00	.000	4.8	3.50	10.0	.118	-1.2169	-0.9855*
238	3.00	.000	9.7	3.60	10.0	.240	-1.2169	-1.3539
239	4.00	.000	9.8	3.60	10.0	.059	-0.3042	-0.4008
240	5.00	.000	8.6	3.50	10.0	.020	-0.3042	-0.0295*
241	3.00	.000	4.8	3.60	10.0	.131	-0.3042	-0.5663*
242	4.00	.000	-0.3	3.60	10.0	.064	-0.1521	-0.2455
243	4.00	.000	9.7	2.60	10.0	.050	-0.1521	-0.2167
244	3.00	.000	19.7	5.60	10.0	-.003	-0.1521	-0.5165
245	3.00	.000	-4.9	5.50	10.0	.180	-0.6085	-0.7786
246	5.00	.000	-5.2	5.50	15.0	.077	-0.6085	-1.0970
247	3.00	.000	-0.3	5.60	15.0	.165	-0.6085	-0.8626
248	5.00	.000	14.8	5.50	15.0	.029	-0.6085	-0.8017
249	6.00	.000	14.7	5.60	15.0	.016	-0.3042	-0.7098
250	5.00	.000	-0.3	5.50	15.0	.044	-0.1521	-0.8166*
251	2.00	.000	4.7	6.60	15.0	.091	-0.1521	-0.2915*
252	6.00	.000	3.9	6.60	15.0	.026	-0.1521	-1.1331*
253	3.00	.000	19.7	6.60	15.0	.018	-0.3042	-0.7924
254	4.00	.000	-5.3	6.60	15.0	.150	-0.9127	-1.3441
255	6.00	.000	-5.3	4.60	15.0	.067	-0.6085	-1.0255*
256	3.00	.000	14.7	4.60	15.0	.094	-0.6085	-0.8811*
257	5.00	.000	9.8	4.50	15.0	.077	-0.9127	-1.0843
258	3.00	.000	4.7	4.60	15.0	.266	-1.2169	-1.4337
260	4.00	.000	-0.3	4.60	15.0	.230	-1.2169	-1.4260
261	4.00	.000	-0.3	4.60	15.0	.049	-0.0761	-0.3644
262	3.00	.000	9.8	4.60	15.0	.056	-0.1521	-0.4326
263	6.00	.000	9.8	4.60	15.0	.033	-0.1521	-0.7247
264	4.00	.000	-0.3	3.60	15.0	.069	-0.1521	-0.2949
265	6.00	.000	19.8	3.60	15.0	-.009	-0.0761	0.1500
266	4.00	.000	9.8	2.60	15.0	.053	-0.1521	-0.2585
267	3.00	.000	9.8	2.60	15.0	.095	-0.3042	-0.4874
268	3.00	.000	4.7	2.60	15.0	.089	-0.1521	-0.2681*
270	6.00	.000	4.8	2.50	15.0	.099	-0.9127	-0.7432
271	6.00	.000	4.8	2.50	15.0	.097	-0.9127	-0.7213
275	4.00	.000	9.8	2.50	15.0	.117	-0.9127	-0.7962

TABLE A-14 (cont'd)

MEASURED AND FITTED VERTICAL FORCE
BETA=15.DEG

RUN	CV	W	PHI	THETA	PSI	ZT	MEASURED	FITTED
276	4.00	.000	4.8	3.60	5.0	.058	-0.1521	-0.2306
277	4.00	.000	-0.3	3.60	20.0	.068	-0.1521	-0.3050
277	3.00	.000	14.7	3.50	20.0	.049	-0.3042	-0.5633
279	4.00	.000	4.8	3.50	20.0	.133	-0.9127	-0.9165
280	6.00	.000	4.8	2.50	20.0	.100	-0.9127	-0.6852
281	5.00	.000	4.8	2.50	20.0	.168	-1.2169	-1.1079
282	6.00	.000	14.7	2.50	20.0	.028	-0.6085	-0.1020
283	4.00	.000	14.7	2.50	20.0	.034	-0.3042	-0.2693
286	4.00	.000	14.7	2.50	20.0	.020	-0.0761	-0.1341*
286	3.00	.000	9.7	4.50	20.0	.043	-0.3042	-0.4359
287	3.00	.000	9.7	4.50	20.0	.075	-0.3042	-0.6428
288	4.00	.000	19.8	4.50	20.0	-.004	-0.3042	-0.5841
289	2.00	.000	14.7	4.50	20.0	.098	-0.3042	-0.7574
290	2.00	.000	19.8	4.60	20.0	.136	-0.6085	-1.2118
294	3.00	.000	-0.3	5.50	20.0	.090	-0.3042	-0.5661
295	3.00	.000	-0.3	5.60	20.0	.056	-0.0761	-0.4113
296	4.00	.000	-0.3	6.60	20.0	.046	-0.0761	-1.0028*
297	4.00	.000	4.7	3.60	5.0	.059	-0.1521	-0.2408
298	4.00	.000	4.8	1.60	5.0	.082	-0.1521	-0.3565*
299	4.00	.000	14.7	1.60	5.0	.038	-0.1521	-0.1796
300	5.00	.000	-0.3	1.50	15.0	.051	-0.1521	0.1940
109	2.35	.059	0.0	3.00	0.0	.069	-0.1521	-0.0751
110	2.92	.073	0.0	3.00	0.0	.060	-0.1521	-0.0684
111	3.88	.097	0.0	3.00	0.0	.052	-0.1521	-0.1120
112	4.95	.124	0.0	3.00	0.0	.045	-0.1521	-0.1659
113	6.02	.150	0.0	3.00	0.0	.037	-0.1521	-0.1309
114	2.87	.072	0.0	3.00	0.0	.049	-0.0761	-0.0080*
115	3.02	.076	0.0	3.00	0.0	.081	-0.3042	-0.1943
116	3.01	.075	0.0	3.00	0.0	.155	-0.6085	-0.6256
117	2.82	.071	0.0	3.00	0.0	.156	-0.9127	-0.5803*
119	4.03	.101	0.0	3.00	0.0	.181	-1.2169	-1.10[illegible]6
120	3.03	.076	5.0	3.00	0.0	.059	-0.1521	-0.0850
121	3.02	.075	-5.0	3.00	0.0	.056	-0.1521	-0.0934
122	2.87	.072	-10.0	3.00	0.0	.052	-0.1521	-0.1587
123	2.89	.072	-15.0	3.00	0.0	.046	-0.1521	-0.2833
124	3.05	.076	-20.0	3.00	0.0	.040	-0.1521	-0.4637
125	3.06	.076	0.0	3.00	5.0	.058	-0.1521	-0.0549*
127	3.01	.075	0.0	3.00	-10.0	.067	-0.1521	-0.1072
128	3.03	.076	0.0	3.00	-15.0	.066	-0.1521	-0.0880
129	3.01	.075	0.0	3.00	-20.0	.055	-0.1521	-0.0087*
130	2.99	.075	0.0	2.00	0.0	.066	-0.1521	-0.1279
131	3.02	.075	0.0	4.00	0.0	.063	-0.1521	-0.1223
132	3.06	.076	0.0	5.00	0.0	.054	-0.1521	-0.1202
133	3.06	.076	0.0	6.00	0.0	.057	-0.1521	-0.1643
136	4.04	.101	-5.0	3.00	0.0	.095	-0.6085	-0.5043
137	6.09	.152	-15.0	5.00	-10.0	.003	-0.0761	-0.3759*
138	6.05	.151	-20.0	6.00	-5.0	-.018	-0.3042	0.2366
139	4.02	.100	-20.0	6.00	-20.0	-.022	-0.0761	-0.9276*
140	5.00	.125	5.0	3.00	-20.0	.022	-0.0761	-0.0657
141	4.99	.125	5.0	3.00	-20.0	.021	-0.0761	-0.0600

TABLE A-14 (cont'd)

MEASURED AND FITTED VERTICAL FORCE
BETA=15.DEG

RUN	CV	W	PHI	THETA	PSI	ZT	MEASURED	FITTED
142	2.91	.073	-5.0	3.00	-5.0	.056	-0.1521	-0.1159
143	1.65	.041	-10.0	6.00	0.0	.153	-0.3042	-0.3937*
144	3.79	.095	-10.0	3.00	-20.0	.093	-1.2169	-0.7781*
145	4.76	.119	5.0	2.00	-5.0	.045	-0.1521	-0.0446
147	3.87	.097	-5.0	6.00	-20.0	.026	-0.0761	-1.0053*
148	5.86	.146	-10.0	3.00	5.0	.097	-0.9127	-0.7029
150	3.94	.093	-15.0	4.00	-5.0	.093	-0.9127	-0.8423
151	2.95	.074	-10.0	2.00	-10.0	.105	-0.6085	-0.5525
154	4.73	.120	-5.0	3.00	-5.0	.032	-0.1521	-0.0944
156	3.00	.075	0.0	2.00	-10.0	.053	-0.0761	0.0030
157	3.02	.076	-5.0	6.00	-15.0	.050	-0.1521	-0.5167
158	3.99	.100	-5.0	6.00	-15.0	.040	-0.1521	-0.8468*
160	2.40	.060	-10.0	2.00	-20.0	.044	-0.1521	-0.2377
161	6.18	.154	5.0	3.00	-20.0	.044	-1.2169	-0.5571*
162	6.21	.155	5.0	3.00	-20.0	.040	-1.2169	-0.5427*
163	6.18	.154	-10.0	2.00	-15.0	.004	-0.6085	0.3334*
164	4.33	.110	-10.0	5.00	-20.0	.041	-0.6085	-1.2429
165	3.23	.081	-10.0	2.00	-20.0	.082	-0.9127	-0.3970*
166	2.15	.054	-10.0	4.00	-15.0	.037	-0.1521	-0.2826
167	2.64	.066	-5.0	3.00	-5.0	.065	-0.1521	-0.1427
168	5.65	.141	-5.0	5.00	5.0	.073	-1.2169	-0.6427*
169	4.72	.118	-5.0	2.00	-10.0	.052	-0.1521	-0.1810*
170	5.81	.145	5.0	3.00	-5.0	.040	-0.3042	-0.1969
171	4.74	.118	0.0	2.00	5.0	.064	-0.3042	-0.2700
173	5.91	.148	-5.0	3.00	0.0	.077	-0.9127	-0.6335*
174	4.83	.121	-20.0	5.00	5.0	.045	-0.6085	-0.5469
175	6.04	.151	-20.0	5.00	-5.0	.020	-1.2169	-0.3960*
177	3.75	.094	-10.0	5.00	5.0	.013	-0.0761	0.0195*
178	2.96	.074	-5.0	3.00	-5.0	.048	-0.1521	-0.0745*
180	3.18	.079	-15.0	4.00	-10.0	.111	-0.9127	-0.9366
181	5.11	.128	-5.0	2.00	-15.0	.046	-0.1521	-0.0753*
182	2.15	.054	-15.0	3.00	5.0	.002	-0.0761	-0.2681*
183	4.91	.123	-20.0	5.00	-15.0	.012	-1.2169	-0.9723*
184	5.08	.127	5.0	4.00	0.0	.071	-0.9127	-0.5230*
527	1.82	.068	0.0	3.00	0.0	.112	-0.1521	-0.1961
528	2.87	.108	0.0	3.00	0.0	.076	-0.1521	-0.1545
529	3.87	.145	0.0	3.00	0.0	.052	-0.1521	-0.1331
530	4.98	.187	0.0	3.00	0.0	.043	-0.1521	-0.2110
531	5.97	.224	0.0	3.00	0.0	.037	-0.1521	-0.2509*
532	2.96	.111	0.0	3.00	0.0	.052	-0.0761	-0.0331
533	2.97	.111	0.0	3.00	0.0	.104	-0.3042	-0.3327
534	2.96	.111	0.0	3.00	0.0	.154	-0.6085	-0.6281
536	3.98	.149	0.0	3.00	0.0	.146	-0.9127	-0.8947
537	3.97	.149	0.0	3.00	0.0	.195	-1.2169	-1.2417
538	2.96	.111	5.0	3.00	0.0	.075	-0.1521	-0.1626
539	2.96	.111	-5.0	3.00	0.0	.074	-0.1521	-0.2019
540	3.00	.112	-10.0	3.00	0.0	.063	-0.1521	-0.2386
541	2.97	.111	-15.0	3.00	0.0	.044	-0.1521	-0.2988
542	2.98	.112	-20.0	3.00	0.0	.019	-0.1521	-0.4394
543	2.98	.112	0.0	3.00	5.0	.074	-0.1521	-0.1433

TABLE A-14 (cont'd)

MEASURED AND FITTED VERTICAL FORCE
BETA=15.DEG

RUN	CV	W	PHI	THETA	PSI	ZT	MEASURED	FITTED
544	2.98	.112	0.0	3.00	-5.0	.078	-0.1521	-0.1873
545	2.99	.112	0.0	3.00	-10.0	.079	-0.1521	-0.1859
546	2.97	.112	0.0	3.00	-20.0	.057	-0.1521	-0.0359*
547	2.99	.112	0.0	3.00	-15.0	.084	-0.1521	-0.1879
548	2.97	.111	0.0	2.00	0.0	.080	-0.1521	-0.2150
549	2.98	.112	0.0	4.00	0.0	.060	-0.1521	-0.1140
550	2.97	.112	0.0	5.00	0.0	.059	-0.1521	-0.1500
551	3.01	.113	0.0	6.00	0.0	.055	-0.1521	-0.1564
552	1.90	.071	-15.0	4.00	5.0	.136	-0.3042	-0.4200*
553	4.03	.151	-5.0	3.00	-5.0	.064	-0.3042	-0.3594
555	5.98	.224	5.0	4.00	-20.0	.064	-0.6085	-1.7804*
556	4.99	.187	-10.0	4.00	5.0	.136	-1.2169	-1.0934
558	3.99	.150	-15.0	6.00	0.0	.003	-0.1521	-0.1285
559	3.00	.113	-5.0	3.00	-5.0	.071	-0.1521	-0.2308
560	6.00	.225	0.0	2.00	-5.0	.051	-0.1521	-0.3947*
561	5.00	.188	-15.0	5.00	0.0	.065	-0.9127	-0.7889
564	6.01	.225	-20.0	3.00	5.0	.054	-0.6085	-0.4243*
566	6.01	.225	0.0	3.00	5.0	.086	-1.2169	-0.8216*
567	6.00	.225	-20.0	5.00	-20.0	-.008	-1.2169	-1.7460
568	3.98	.149	-10.0	6.00	0.0	.014	-0.0761	-0.0607
569	3.97	.149	5.0	4.00	-10.0	.169	-0.9127	-0.9982
570	2.99	.112	-5.0	3.00	0.0	.146	-0.6085	-0.6281
571	4.97	.186	-5.0	6.00	-20.0	.049	-0.1521	-2.3951*
572	3.00	.112	-5.0	3.00	-5.0	.071	-0.1521	-0.2279
573	5.95	.223	-5.0	2.00	-20.0	.082	-1.2169	-0.5268
577	4.97	.186	5.0	3.00	-20.0	.106	-0.0761	-0.5684*
579	1.99	.075	-15.0	6.00	-5.0	.186	-0.6085	-0.8893
580	2.96	.111	0.0	6.00	-20.0	.191	-0.9127	-1.3414
581	6.00	.225	-20.0	2.00	0.0	-.006	-0.3042	0.1773
583	5.95	.223	-15.0	2.00	-5.0	.050	-0.9127	-0.5679
585	6.01	.225	-10.0	3.00	-5.0	.058	-0.9127	-0.7600
586	2.96	.111	-5.0	3.00	-5.0	.072	-0.1521	-0.2264
588	3.91	.147	-5.0	3.00	-5.0	.125	-0.9127	-0.8175
593	4.03	.151	-10.0	6.00	-5.0	.021	-0.0761	-0.2975*
594	2.97	.111	-20.0	4.00	0.0	.138	-0.6085	-0.8733
595	3.01	.113	0.0	4.00	-15.0	.104	-0.3042	-0.4563
596	2.03	.076	-5.0	5.00	5.0	.276	-0.9127	-0.8509
598	3.01	.113	-10.0	5.00	-10.0	.128	-0.9127	-0.9790
599	3.02	.113	-5.0	3.00	-5.0	.073	-0.1521	-0.2445
600	2.01	.075	-10.0	6.00	-10.0	.254	-0.9127	-1.1278
601	5.02	.188	-20.0	5.00	-10.0	.026	-1.2169	-1.0106
602	5.05	.189	-20.0	2.00	-10.0	-.030	-0.0761	0.3188
603	3.05	.114	-15.0	5.00	-15.0	.036	-0.3042	-0.7680
604	5.99	.225	-10.0	4.00	-15.0	.052	-1.2169	-1.5670
618	1.92	.144	0.0	3.00	0.0	.093	-0.1521	-0.1479
619	2.99	.224	0.0	3.00	0.0	.070	-0.1521	-0.1929
620	2.50	.188	0.0	3.00	0.0	.078	-0.1521	-0.1500
621	3.07	.230	0.0	3.00	0.0	.050	-0.0761	-0.0836
622	3.06	.230	0.0	3.00	0.0	.086	-0.3042	-0.3187
623	3.05	.228	0.0	3.00	0.0	.136	-0.6085	-0.6479

TABLE A-14 (cont'd)

MEASURED AND FITTED VERTICAL FORCE
BETA=15.DEG

RUN	CV	W	PHI	THETA	PSI	ZT	MEASURED	FITTED
625	3.01	.226	5.0	3.00	0.0	.061	-0.1521	-0.1228
626	2.99	.224	-5.0	3.00	0.0	.066	-0.1521	-0.2366
627	3.01	.226	-10.0	3.00	0.0	.049	-0.1521	-0.2512
628	3.00	.225	-15.0	3.00	0.0	.028	-0.1521	-0.3084
629	3.01	.226	-20.0	3.00	0.0	.003	-0.1521	-0.4517
630	2.98	.223	0.0	3.00	5.0	.063	-0.1521	-0.1186
631	2.97	.223	0.0	3.00	-5.0	.070	-0.1521	-0.2077
632	2.96	.222	0.0	3.00	-10.0	.071	-0.1521	-0.2079
633	2.97	.223	0.0	3.00	-15.0	.072	-0.1521	-0.2039
634	2.97	.223	0.0	3.00	-20.0	.053	-0.1521	-0.0966
635	2.97	.223	0.0	2.00	0.0	.062	-0.1521	-0.1533
636	2.98	.223	0.0	4.00	0.0	.060	-0.1521	-0.1664
637	2.98	.223	0.0	5.00	0.0	.053	-0.1521	-0.1692
638	2.98	.223	0.0	6.00	0.0	.048	-0.1521	-0.1593
639	2.47	.185	0.0	6.00	-20.0	.058	-0.0761	-0.6378*
640	2.48	.186	5.0	6.00	-5.0	.232	-0.9127	-0.9926
641	2.96	.222	-5.0	3.00	-5.0	.108	-0.6085	-0.5491
642	2.48	.186	-5.0	6.00	5.0	.275	-1.2169	-1.1628
643	1.97	.148	0.0	4.00	-10.0	.206	-0.6085	-0.6314
644	2.50	.187	-20.0	3.00	-10.0	-.010	-0.0761	-0.6343*
645	1.99	.149	-20.0	3.00	-10.0	.069	-0.3042	-0.8895
646	2.96	.222	-5.0	3.00	-5.0	.061	-0.1521	-0.2427
660	2.99	.224	-15.0	3.00	5.0	.071	-0.3042	-0.4153
661	1.99	.150	-5.0	3.00	-15.0	.106	-0.3042	-0.3325
662	2.99	.224	-20.0	6.00	-10.0	.108	-1.2169	-1.6672
665	2.51	.188	0.0	3.00	-5.0	.092	-0.3042	-0.2279
667	3.00	.225	5.0	6.00	-10.0	.181	-0.9127	-1.1893
668	2.00	.150	-5.0	3.00	-10.0	.066	-0.0761	-0.1749*
670	2.99	.224	-5.0	5.00	-20.0	.158	-1.2169	-1.5126
671	2.51	.188	5.0	5.00	0.0	.043	-0.1521	-0.0361*
672	2.99	.224	-5.0	3.00	-5.0	.056	-0.1521	-0.2196
673	1.99	.149	-5.0	6.00	-5.0	.255	-0.9127	-0.9978
674	2.50	.188	5.0	5.00	0.0	.091	-0.3042	-0.2766
675	2.50	.188	-5.0	6.00	0.0	.037	-0.0761	-0.0440*
676	1.99	.149	-20.0	3.00	-20.0	-.023	-0.0761	-0.8780*
678	1.99	.149	-10.0	3.00	5.0	.079	-0.1521	-0.2304
681	2.51	.188	-10.0	6.00	-15.0	.034	-0.0761	-0.6251*
682	2.50	.187	5.0	6.00	-10.0	.256	-0.9127	-1.0892
683	2.97	.223	-5.0	3.00	-5.0	.075	-0.1521	-0.3377*
685	2.99	.224	-15.0	6.00	0.0	.229	-1.2169	-1.5333
686	2.50	.188	-15.0	8.00	0.0	.279	-1.2169	-1.4095
688	2.99	.224	0.0	5.00	-15.0	.185	-0.9127	-1.2696
689	2.00	.150	0.0	5.00	5.0	.077	-0.0761	-0.0643
690	3.00	.225	5.0	6.00	-20.0	.124	-0.6085	-1.2499
691	2.02	.152	-5.0	8.00	-15.0	.342	-1.2169	-1.5901
693	2.46	.185	-10.0	2.00	5.0	.086	-0.3042	-0.3370
694	2.96	.222	-20.0	4.00	-10.0	.124	-1.2169	-1.4560
695	2.96	.222	-5.0	3.00	-5.0	.073	-0.1521	-0.3236*
697	2.47	.185	-10.0	6.00	0.0	.224	-0.9127	-1.1260
698	2.99	.224	-10.0	6.00	-5.0	.134	-0.9127	-1.1521

TABLE A-14 (cont'd)

MEASURED AND FITTED VERTICAL FORCE
BETA=15.DEG

RUN	CV	W	PHI	THETA	PSI	ZT	MEASURED	FITTED
699	3.00	.225	5.0	8.00	-10.0	.222	-1.2169	-1.6539
700	3.00	.225	-20.0	4.00	-5.0	.177	-1.2169	-1.5264
701	2.48	.186	-20.0	5.00	-20.0	.087	-0.9127	-1.5827

MEAN ERROR= 0.4721
STANDARD DEVIATION= 0.1493

TABLE A-15

MEASURED AND FITTED VERTICAL FØRCE
BETA=20.DEG

RUN	CV	W	PHI	THETA	PSI	ZT	MEASURED	FITTED
316	4.00	.000	4.8	3.70	5.0	.086	-0.1521	-0.2888*
317	4.00	.000	4.7	3.70	5.0	.088	-0.1521	-0.2991*
318	4.00	.000	4.7	3.60	0.0	.131	-0.1521	-0.5361*
326	4.00	.000	4.7	3.60	0.0	.116	-0.3042	-0.4424
328	4.00	.000	9.7	3.70	0.0	.070	-0.1521	-0.1936
329	4.00	.000	14.7	3.70	0.0	.047	-0.1521	-0.1281
330	4.00	.000	19.8	3.60	0.0	.025	-0.1521	-0.1085
331	4.00	.000	27.2	3.60	0.0	-.006	-0.1521	-0.2024
332	3.00	.000	19.7	3.60	0.0	.191	-0.6085	-0.5763
337	4.00	.000	27.3	4.70	0.0	.179	-0.9127	-1.0416*
340	3.00	.000	4.7	2.60	0.0	.098	-0.0761	-0.2172
342	6.00	.000	19.8	3.70	0.0	.141	-1.2169	-1.3201*
344	3.00	.000	27.3	5.70	0.0	.281	-1.2169	-0.9351
345	3.00	.000	27.3	5.60	0.0	.173	-0.6085	-0.6832*
349	5.00	.000	4.8	5.60	0.0	.053	-0.0761	-0.1746
351	6.00	.000	-5.3	6.70	0.0	.051	-0.1521	-0.1.643
353	2.00	.000	27.2	6.70	0.0	.068	-0.1521	-0.1397
354	3.00	.000	-5.3	6.60	0.0	.110	-0.3042	-0.3555
355	4.00	.000	9.8	6.70	0.0	.186	-1.2169	-1.1585
356	3.00	.000	-0.3	6.70	-5.0	.236	-0.9127	-1.0116
357	4.00	.000	9.7	6.70	-5.0	.069	-0.3042	-0.2850
358	4.00	.000	9.7	6.70	-5.0	.060	-0.3042	-0.2262
359	4.00	.000	9.7	6.70	-5.0	.061	-0.3042	-0.2302
362	4.00	.000	9.7	5.60	-5.0	.065	-0.3042	-0.2473
364	3.00	.000	14.7	5.70	-5.0	.266	-0.9127	-0.7846
365	5.00	.000	19.8	5.60	-5.0	.170	-1.2169	-1.1761
366	6.00	.000	19.8	4.70	-5.0	.132	-1.2169	-1.1488
368	4.00	.000	9.7	2.60	-5.0	.109	-0.3042	-0.2935
369	2.00	.000	9.7	2.60	-5.0	.172	-0.3042	-0.3166*
370	4.00	.000	14.7	2.60	-5.0	.045	-0.1521	-0.0014
371	5.00	.000	4.7	2.60	-5.0	.145	-0.6085	-0.7322
374	5.00	.000	-0.3	3.60	-5.0	.069	-0.1521	-0.1873
375	5.00	.000	-0.3	3.60	-5.0	.067	-0.1521	-0.1685*
376	4.00	.000	-0.3	3.70	-5.0	.087	-0.1521	-0.2589*
377	4.00	.000	4.7	3.60	5.0	.081	-0.1521	-0.2521*
378	4.00	.000	4.8	3.60	5.0	.064	-0.0761	-0.1505
379	4.00	.000	-0.3	3.60	5.0	.084	-0.1521	-0.2327
380	3.00	.000	-5.3	3.60	5.0	.148	-0.3042	-0.3851
381	3.00	.000	-0.3	2.60	5.0	.117	-0.1521	-0.3004*
382	5.00	.000	4.7	2.60	5.0	.076	-0.1521	-0.2270
383	3.00	.000	19.7	2.60	5.0	.028	-0.0761	-0.0129*
385	5.00	.000	14.8	2.60	5.0	.153	-1.2169	-1.1435
387	6.00	.000	4.8	2.60	5.0	.151	-1.2169	-1.1806
388	3.00	.000	-5.2	6.70	5.0	.310	-1.2169	-1.2403
389	5.00	.000	9.7	6.60	5.0	.040	-0.1521	-0.1695
395	4.00	.000	27.4	5.60	5.0	.176	-1.2169	-1.4757*
396	4.00	.000	4.8	3.60	5.0	.081	-0.1521	-0.2518*
397	4.00	.000	-0.2	3.60	10.0	.084	-0.1521	-0.2279
398	3.00	.000	-5.3	3.60	10.0	.146	-0.3042	-0.2993
399	4.00	.000	9.8	3.60	10.0	.087	-0.3042	-0.4076

TABLE A-15 (cont'd)

MEASURED AND FITTED VERTICAL FØRCE
BETA=20.DEG

RUN	CV	W	PHI	THETA	PSI	ZT	MEASURED	FITTED
400	5.00	.000	19.7	3.60	10.0	.019	-0.3042	-0.1894
401	4.00	.000	14.8	3.60	10.0	.163	-1.2169	-1.0699
402	3.00	.000	14.7	6.60	10.0	.223	-1.2169	-1.2637
403	3.00	.000	4.7	6.60	10.0	.152	-0.6085	-0.6449
404	5.00	.000	[illegible].3	6.60	10.0	.091	-0.6085	-0.6388
405	2.00	.000	-5.3	6.60	1[illegible].0	.120	-0.1521	-0.1196
406	4.00	.000	27.3	6.60	10.0	-.027	-0.1521	-0.2065
407	3.00	.000	27.2	6.60	10.0	-.025	-0.0761	-0.0850
408	2.00	.000	19.7	4.60	10.0	.038	-0.0761	-0.0408
409	4.00	.000	9.7	2.60	10.0	.063	-0.1521	-0.1949
410	3.00	.000	27.3	5.60	10.0	-.016	-0.1521	-0.1796
411	3.00	.000	-5.2	5.60	10.0	.211	-0.6085	-0.6381
412	3.00	.000	-5.3	5.60	10.0	.212	-0.6085	-0.6373
413	5.00	.000	-5.2	5.50	15.0	.089	-0.6085	-0.5611
414	3.00	.000	-0.3	5.60	15.0	.201	-0.6085	-0.6523
415	5.00	.000	19.7	5.50	15.0	.028	-0.6085	-0.5878
417	5.00	.000	-0.3	5.50	15.0	.057	-0.1521	-0.4310*
419	6.00	.000	27.2	3.60	15.0	-.048	-0.0761	0.2086*
420	4.00	.000	14.8	2.60	15.0	.056	-0.1521	-0.2944*
421	3.00	.000	4.8	2.60	15.0	.109	-0.1521	-0.2969*
422	3.00	.000	9.8	2.60	15.0	.152	-0.3042	-0.6315*
423	4.00	.000	14.8	2.60	15.0	.130	-0.9127	-0.8545
424	6.00	.000	4.8	2.60	15.0	.125	-0.9127	-0.9195
427	5.00	.000	14.8	4.50	15.0	.077	-0.9127	-0.8196
428	4.00	.000	4.8	4.60	15.0	.215	-1.2169	-1.1669
429	4.00	.000	-0.2	4.70	15.0	.290	-1.2169	-1.2764
430	6.00	.000	-5.2	4.60	15.0	.080	-0.6085	-0.6173
431	3.00	.000	14.8	4.60	15.0	.135	-0.6085	-0.7094
432	5.00	.000	14.8	4.60	15.0	.033	-0.1521	-0.4148*
433	3.00	.000	14.7	4.60	15.0	.056	-0.1521	-0.2822*
434	4.00	.000	-0.3	4.60	15.0	.063	-0.0761	-0.2172*
435	2.00	.000	4.7	6.70	15.0	.123	-0.1521	-0.2334
436	6.00	.000	9.7	6.70	15.0	.041	-0.1521	-0.6641*
437	3.00	.000	27.2	6.60	15.0	.001	-0.3042	-0.2535
438	4.00	.000	-5.2	6.60	15.0	.185	-0.9127	-0.8218
439	4.00	.000	-0.3	5.60	20.0	.051	-0.0761	-0.3523*
440	3.00	.000	4.7	5.60	20.0	.075	-0.0761	-0.2698*
443	6.00	.000	27.2	5.50	20.0	-.013	-1.2169	-0.7467*
445	2.00	.000	27.3	4.60	20.0	.138	-0.6085	-0.5877
446	4.00	.000	27.2	4.60	20.0	-.025	-0.3042	-0.2326
447	2.00	.000	19.8	4.60	20.0	.112	-0.3042	-0.4140
448	3.00	.000	4.7	4.60	20.0	.115	-0.3042	-0.3743
449	3.00	.000	9.7	4.60	20.0	.065	-0.0761	-0.2825*
450	4.00	.000	-0.3	3.60	20.0	.085	-0.1521	-0.2070
451	3.00	.000	19.7	3.60	20.0	.057	-0.3042	-0.3588
453	6.00	.000	9.8	3.60	20.0	.119	-1.2169	-1.3134
454	4.00	.000	9.8	3.60	20.0	.190	-1.2169	-1.1446
455	6.00	.000	19.7	2.60	20.0	.032	-0.6085	-0.6147
456	4.00	.000	14.8	2.60	20.0	.072	-0.3042	-0.4684
457	4.00	.000	19.8	1.60	20.0	.014	-0.0761	-0.0787

TABLE A-15 (cont'd)

MEASURED AND FITTED VERTICAL FØRCE
BETA=20.DEG

RUN	CV	W	PHI	THETA	PSI	ZT	MEASURED	FITTED
459	4.00	.000	4.8	3.60	5.0	.077	-0.1521	-0.2307
211	2.07	.052	0.0	3.00	0.0	.106	-0.1521	-0.1573
212	2.96	.074	0.0	3.00	0.0	.079	-0.1521	-0.1159
213	3.92	.098	0.0	3.00	0.0	.070	-0.1521	-0.1423
214	5.00	.125	0.0	3.00	0.0	.056	-0.1521	-0.1140
215	5.96	.149	0.0	3.00	0.0	.047	-0.1521	-0.0865
216	2.94	.074	0.0	3.00	0.0	.069	-0.0761	-0.0726
217	3.01	.075	0.0	3.00	0.0	.106	-0.3042	-0.2461
218	3.02	.075	0.0	3.00	0.0	.146	-0.6085	-0.4494
219	3.97	.099	0.0	3.00	0.0	.122	-0.6085	-0.4834
220	4.00	.100	0.0	3.00	0.0	.147	-0.9127	-0.6669*
221	5.00	.125	0.0	3.00	0.0	.120	-0.9127	-0.7035*
222	4.95	.124	0.0	3.00	0.0	.146	-1.2169	-0.9413*
223	5.96	.149	0.0	3.00	0.0	.116	-1.2169	-0.9300*
224	3.00	.075	5.0	3.00	0.0	.074	-0.1521	-0.0748
225	2.97	.074	-5.0	3.00	0.0	.074	-0.1521	-0.1196
226	2.99	.075	-10.0	3.00	0.0	.069	-0.1521	-0.1264
227	2.99	.075	-15.0	3.00	0.0	.060	-0.1521	-0.1266
228	2.97	.074	-20.0	3.00	0.0	.048	-0.1521	-0.1244
229	2.95	.074	-27.5	3.00	0.0	.029	-0.1521	-0.1631
230	2.98	.074	0.0	3.00	5.0	.079	-0.1521	-0.1067
231	2.98	.074	0.0	3.00	-5.0	.078	-0.1521	-0.1187
232	2.94	.073	0.0	3.00	-10.0	.079	-0.1521	-0.1107
233	3.02	.075	0.0	3.00	-15.0	.078	-0.1521	-0.1004
234	3.01	.075	0.0	3.00	-20.0	.088	-0.1521	-0.1029
235	2.98	.075	0.0	2.00	0.0	.088	-0.1521	-0.1927
236	3.00	.075	0.0	4.00	0.0	.078	-0.1521	-0.1320
237	3.01	.075	0.0	5.00	0.0	.081	-0.1521	-0.1758
238	2.97	.074	0.0	6.00	0.0	.065	-0.1521	-0.0962
239	4.90	.123	5.0	2.00	0.0	.123	-0.6085	-0.7018
240	4.00	.100	-5.0	3.00	0.0	.125	-0.6085	-0.5386
241	5.99	.150	-15.0	5.00	-10.0	.014	-0.0761	-0.2330*
242	5.99	.150	-27.5	6.00	-5.0	-.038	-0.3042	-0.2706
243	3.97	.099	-27.5	6.00	-20.0	-.046	-0.0761	-0.0[illegible]87
244	2.99	.075	-5.0	3.00	-5.0	.077	-0.1521	-0.1[illegible]46
245	4.91	.123	5.0	3.00	-20.0	.056	-0.0761	-0.1907*
246	1.74	.044	-15.0	6.00	0.0	.155	-0.3042	-0.2674
247	3.90	.098	-10.0	2.00	-20.0	.111	-1.2169	-0.7074*
248	4.96	.124	5.0	2.00	-5.0	.059	-0.1521	-0.1077
250	3.99	.100	-5.0	6.00	-20.0	.058	-0.0761	-0.4145*
252	6.05	.151	-10.0	3.00	5.0	.105	-0.9127	-0.7888
254	3.98	.099	-20.0	4.00	-5.0	.104	-0.9127	-0.7681
255	2.99	.075	-10.0	3.00	-10.0	.136	-0.6085	-0.5703
256	2.97	.074	-5.0	3.00	-5.0	.079	-0.1521	-0.1699
259	5.02	.125	-20.0	4.00	5.0	.135	-0.9127	-0.9113
261	3.00	.075	-5.0	2.00	-10.0	.067	-0.076[illegible]	-0.1565*
262	4.01	.100	-5.0	6.00	-15.0	.059	-0.1521	-0.3432*
263	2.10	.053	-15.0	2.00	-20.0	.055	-0.1521	-0.1803
264	6.06	.152	5.0	3.00	-20.0	.052	-1.2169	-0.5751*
265	6.09	.152	-15.0	2.00	-15.0	.027	-0.3042	-0.451[illegible]

TABLE 15 (Cont'd)

MEASURED AND FITTED VERTICAL FØRCE
BETA=20.DEG

RUN	CV	W	PHI	THETA	PSI	ZT	MEASURED	FITTED
266	4.00	.100	-10.0	5.00	-20.0	.086	-0.6085	-0.7065
267	4.93	.123	-15.0	2.00	-20.0	.063	-0.9127	-0.7536
268	2.98	.074	-5.0	3.00	-5.0	.078	-0.1521	-0.1664
269	2.03	.051	-15.0	4.00	-15.0	.069	-0.1521	-0.1815 *
270	5.97	.149	-5.0	5.00	5.0	.095	-1.2169	-0.8641 *
271	4.95	.124	-10.0	2.00	-10.0	.056	-0.1521	-0.3477 *
272	5.93	.148	0.0	3.00	-5.0	.067	-0.3042	-0.3624
273	5.00	.125	-5.0	2.00	5.0	.069	-0.3042	-0.1901
274	5.95	.149	-5.0	3.00	0.0	.099	-0.9127	-0.7429
275	4.97	.124	-20.0	5.00	5.0	.040	-0.6085	-0.5580 *
276	5.98	.150	-25.0	5.00	-5.0	.031	-1.2169	-0.8744 *
278	5.62	.140	5.0	6.00	-15.0	.104	-1.2169	-1.0228
279	2.75	.069	-5.0	3.00	-5.0	.093	-0.1521	-0.2129 *
280	3.69	.092	-15.0	5.00	5.0	.021	-0.0761	-0.1384
282	4.09	.102	-20.0	4.00	-10.0	.083	-0.9127	-0.7768 *
283	4.92	.123	-10.0	2.00	-15.0	.066	-0.1521	-0.5194 *
284	2.06	.052	-20.0	3.00	5.0	.062	-0.0761	0.0431 *
285	4.84	.121	-25.0	5.00	-15.0	.025	-1.2169	-0.7876
312	2.26	.085	0.0	3.00	0.0	.095	-0.1521	-0.1172
313	3.20	.120	0.0	3.00	0.0	.084	-0.1521	-0.1526
314	4.29	.161	0.0	3.00	0.0	.055	-0.1521	-0.1035
315	5.24	.196	0.0	3.00	0.0	.046	-0.1521	-0.1674 *
316	6.14	.230	0.0	3.00	0.0	.037	-0.1521	-0.2562
317	3.12	.117	0.0	3.00	0.0	.063	-0.0761	-0.0435
318	3.01	.113	0.0	3.00	0.0	.125	-0.3042	-0.3366
320	4.16	.156	0.0	3.00	0.0	.125	-0.6085	-0.6048
321	4.05	.152	0.0	3.00	0.0	.125	-0.6085	-0.5781
324	4.99	.187	0.0	3.00	0.0	.129	-0.9127	-0.9376
325	4.99	.187	0.0	3.00	0.0	.152	-1.2169	-1.1806
326	3.01	.113	5.0	3.00	0.0	.078	-0.1521	-0.0752
327	3.01	.113	-5.0	3.00	0.0	.081	-0.1521	-0.1567
328	2.99	.112	-10.0	3.00	0.0	.071	-0.1521	-0.1445
329	3.01	.113	-15.0	3.00	0.0	.051	-0.1521	-0.1127
330	3.02	.113	-20.0	3.00	0.0	.044	-0.1521	-0.1481
331	2.99	.112	-27.5	3.00	0.0	.021	-0.1521	-0.1978 *
332	2.95	.111	0.0	3.00	5.0	.041	-0.1521	0.0666
333	3.05	.114	0.0	3.00	-5.0	.092	-0.1521	-0.1810
334	2.81	.106	0.0	3.00	-10.0	.097	-0.1521	-0.1729
335	2.81	.105	0.0	3.00	-15.0	.098	-0.1521	-0.1547 *
336	2.83	.106	0.0	3.00	-20.0	.068	-0.1521	-0.0200 *
337	2.87	.107	0.0	2.00	0.0	.105	-0.1521	-0.2642
338	2.90	.109	0.0	4.00	0.0	.078	-0.1521	-0.1114
341	3.06	.115	0.0	5.00	0.0	.081	-0.1521	-0.1712 *
346	1.90	.071	-20.0	4.00	5.0	.136	-0.3042	-0.0776
347	4.06	.152	-5.0	3.00	-5.0	.086	-0.3042	-0.3845
348	4.97	.186	5.0	4.00	-20.0	.086	-0.6085	-0.5289
349	4.99	.187	-15.0	4.00	5.0	.175	-1.2169	-1.2978
350	3.01	.113	-5.0	3.00	-5.0	.087	-0.1521	-0.2191
351	4.05	.152	-15.0	6.00	0.0	.019	-0.1521	-0.1838
352	5.94	.223	0.0	2.00	-5.0	.040	-0.1521	-0.2769 *

TABLE A-15 (cont'd)

MEASURED AND FITTED VERTICAL FØRCE
BETA=20. DEG

RUN	CV	W	PHI	THETA	PSI	ZT	MEASURED	FITTED
353	4.99	.187	-20.0	5.00	0.0	.072	-0.9127	-0.9255
355	5.00	.187	-20.0	5.00	0.0	.079	-0.9127	-0.9858
359	4.00	.150	-25.0	5.00	5.0	.098	-0.6085	-0.7365
360	4.00	.150	0.0	4.00	5.0	.209	-1.2169	-1.1441
361	5.99	.225	-25.0	5.00	-20.0	-.011	-1.2169	-0.8047*
362	4.01	.150	-15.0	6.00	0.0	.016	-0.0761	-0.1578*
363	4.04	.152	5.0	4.00	-10.0	.192	-0.9127	-0.9020
364	4.03	.151	-5.0	3.00	0.0	.129	-0.6085	-0.6329
365	2.97	.111	-5.0	3.00	-5.0	.091	-0.1521	-0.2314
366	4.97	.187	-10.0	6.00	-20.0	.055	-0.1521	-0.8710*
370	5.52	.207	-5.0	3.00	-20.0	.090	-1.2169	-1.0957
371	5.02	.188	5.0	3.00	0.0	.069	-0.3042	-0.3457
372	2.99	.112	5.0	2.00	-20.0	.094	-0.0761	0.0194*
373	1.97	.074	-20.0	6.00	-5.0	.187	-0.6085	-0.5663
374	2.92	.109	-20.0	6.00	-5.0	.105	-0.6085	-0.6050
376	5.00	.187	-5.0	2.00	0.0	.071	-0.3042	-0.3911
378	4.02	.151	0.0	6.00	-20.0	.126	-0.9127	-0.6911*
379	6.01	.225	-20.0	2.00	0.0	.004	-0.3042	-0.2660
380	4.97	.187	-20.0	2.00	-5.0	.082	-0.9127	-0.9467
381	2.99	.112	-5.0	3.00	-5.0	.082	-0.1521	-0.1880
384	5.95	.223	-10.0	3.00	5.0	.094	-0.9127	-0.9421
386	4.85	.182	-15.0	3.00	-5.0	.092	-0.9127	-0.8711
387	5.12	.192	-5.0	3.00	-5.0	.114	-0.9127	-0.9649
390	6.10	.229	5.0	5.00	-15.0	.089	-1.2169	-1.2763
395	4.23	.158	-10.0	6.00	-5.0	.038	-0.0761	-0.2135*
396	3.19	.119	-27.5	4.00	0.0	.128	-0.6085	-0.6067
397	3.15	.118	-5.0	4.00	-15.0	.097	-0.3042	-0.3399
398	4.10	.154	-5.0	5.00	5.0	.137	-0.9127	-0.7490
399	3.07	.115	-5.0	3.00	-5.0	.061	-0.1521	-0.0919
402	6.06	.227	-10.0	2.00	5.0	.040	-0.3042	-0.3300
403	3.11	.117	-10.0	5.00	-10.0	.151	-0.9127	-0.7671
404	2.98	.112	-15.0	6.00	-10.0	.135	-0.9127	-0.7866
405	4.04	.151	-20.0	5.00	-10.0	.090	-1.2169	-0.9647*
702	2.99	.224	0.0	3.00	0.0	.093	-0.1521	-0.1279
703	1.98	.142	0.0	3.00	0.0	.123	-0.1521	-0.1281
704	2.49	.187	0.0	3.00	0.0	.103	-0.1521	-0.0897
705	3.01	.226	0.0	3.00	0.0	.071	-0.0761	-0.0058*
706	2.99	.224	0.0	3.00	0.0	.115	-0.3042	-0.2640
707	2.99	.224	0.0	3.00	0.0	.176	-0.6085	-0.6604
709	3.01	.226	5.0	3.00	0.0	.085	-0.1521	-0.0218*
710	3.01	.226	-5.0	3.00	0.0	.091	-0.1521	-0.1894
711	3.01	.226	-10.0	3.00	0.0	.076	-0.1521	-0.1754
712	3.00	.225	-15.0	3.00	0.0	.057	-0.1521	-0.1516
713	3.00	.225	-20.0	3.00	0.0	.028	-0.1521	-0.1142
714	3.00	.225	-27.5	3.00	0.0	.006	-0.1521	-0.2257
715	3.01	.226	0.0	3.00	5.0	.088	-0.1521	-0.0757
716	3.00	.225	0.0	3.00	-5.0	.099	-0.1521	-0.1843
717	3.01	.225	0.0	3.00	-10.0	.099	-0.1521	-0.1866
718	3.01	.225	0.0	3.00	-15.0	.103	-0.1521	-0.1901
719	3.01	.226	0.0	3.00	-20.0	.104	-0.1521	-0.1621

TABLE A-15 (cont'd)

MEASURED AND FITTED VERTICAL FØRCE
BETA=20.DEG

RUN	CV	W	PHI	THETA	PSI	ZT	MEASURED	FITTED
720	3.01	.226	0.0	2.00	0.0	.090	-0.1521	-0.1529
721	3.02	.226	0.0	4.00	0.0	.100	-0.1521	-0.1883
722	3.00	.225	0.0	5.00	0.0	.094	-0.1521	-0.1773
723	3.01	.226	0.0	6.00	0.0	.089	-0.1521	-0.1621 *
724	2.53	.190	0.0	6.00	-20.0	.084	-0.0761	0.0484
726	2.53	.189	5.0	8.00	-5.0	.256	-0.9127	-0.9313
728	2.99	.224	-5.0	3.00	-5.0	.165	-0.6085	-0.7233
730	2.99	.224	-5.0	6.00	5.0	.267	-1.2169	-1.2077
731	1.95	.147	0.0	5.00	-10.0	.249	-0.6085	-0.5950
732	2.49	.187	-27.5	3.00	-10.0	-.010	-0.0761	-0.0781 *
733	3.00	.225	-5.0	3.00	-5.0	.100	-0.1521	-0.2933
735	1.97	.148	-27.5	3.00	-10.0	.079	-0.3042	-0.2556
736	3.00	.225	-20.0	3.00	5.0	.094	-0.3042	-0.2573
737	3.00	.225	-27.5	6.00	-10.0	.141	-1.2169	-1.2712
738	1.99	.149	-10.0	3.00	-15.0	.137	-0.3042	-0.4283
741	2.48	.186	0.0	3.00	-5.0	.132	-0.3042	-0.2551
743	2.53	.190	5.0	8.00	-10.0	.273	-0.9127	-0.9345 *
744	2.04	.153	-10.0	3.00	-10.0	.092	-0.0761	-0.1811
746	3.01	.226	-5.0	5.00	-20.0	.242	-1.2169	-1.2642
747	3.01	.226	-5.0	3.00	-5.0	.086	-0.1521	-0.2068
749	3.07	.230	-10.0	6.00	-5.0	.166	-0.9127	-0.9089
750	2.57	.193	5.0	5.00	0.0	.129	-0.3042	-0.2038
751	2.57	.193	-10.0	6.00	0.0	.067	-0.0761	-0.0576 *
752	2.07	.155	-27.5	3.00	-20.0	-.018	-0.0761	0.0320
754	2.00	.150	5.0	6.00	0.0	.257	-0.6085	-0.6249
755	2.14	.160	-15.0	3.00	5.0	.120	-0.1521	-0.1283
757	2.51	.188	0.0	8.00	-20.0	.339	-1.2169	-1.2536 *
758	2.51	.189	-15.0	6.00	-15.0	.062	-0.0761	-0.1974
759	2.51	.188	5.0	6.00	-10.0	.280	-0.9127	-0.8315 *
760	3.00	.225	-5.0	3.00	-5.0	.094	-0.1521	-0.2533
761	3.00	.225	-15.0	5.00	0.0	.257	-1.2169	-1.2610
763	2.51	.183	-20.0	7.00	0.0	.301	-1.2169	-1.1969
764	2.99	.224	0.0	5.00	-5.0	.103	-0.1521	-0.2310
765	2.99	.224	-5.0	5.00	-15.0	.183	-0.9127	-0.8904 *
766	2.02	.151	0.0	5.00	5.0	.372	-0.0761	-1.0326
769	2.51	.188	-10.0	8.00	-15.0	.234	-1.2169	-1.1944
771	3.00	.225	-10.0	2.00	5.0	.107	-0.3042	-0.2740
772	3.00	.225	-25.0	5.00	-10.0	.151	-1.2169	-1.2098 *
773	2.98	.224	-5.0	3.00	-5.0	.103	-0.1521	-0.3031
774	2.49	.186	-10.0	4.00	0.0	.251	-0.9127	-0.8983
775	2.98	.224	-10.0	6.00	-5.0	.176	-0.9127	-0.9282
777	2.49	.187	5.0	8.00	-10.0	.330	-1.2169	-1.1784 *
780	2.97	.223	-25.0	6.00	-5.0	.212	-1.2169	-1.4072
781	2.48	.186	-25.0	5.00	-20.0	.104	-0.9127	-0.8096

MEAN ERRØR= 0.0360
STANDARD DEVIATIØN= 0.1573

TABLE A-16

MEASURED AND FITTED PITCH MØMENT
BETA=10.DEG

RUN	CV	W	PHI	THETA	PSI	ZT	MEASURED	FITTED
3	4.00	.000	2.1	2.60	0.0	.043	-0.2400	-0.2350
5	4.00	.000	4.6	2.50	0.0	.035	-0.2480	-0.2274
6	4.00	.000	7.2	2.60	0.0	.139	0.1059	0.1381
7	4.00	.000	9.7	2.50	0.0	.020	-0.2467	-0.2507
8	4.00	.000	12.2	2.40	0.0	.011	-0.2331	-0.2870
1	4.00	.000	4.7	2.50	5.0	.028	-0.2411	-0.2155
9	4.00	.000	0.0	2.60	-5.0	.046	-0.2439	-0.2375
10	4.00	.000	0.0	2.60	5.0	.046	-0.2394	-0.2380
11	4.00	.000	0.0	2.60	10.0	.048	-0.2383	-0.2420
12	4.00	.000	0.1	2.60	15.0	.047	-0.2375	-0.2413
13	4.00	.000	0.1	2.60	20.0	.046	-0.2328	-0.2294
24	4.00	.000	5.1	2.80	0.0	.039	-0.2044	-0.2481
34	5.00	.000	2.4	2.40	-5.0	.076	-0.4721	-0.2921*
36	2.00	.000	7.4	5.50	-5.0	.287	-0.0067	0.3943*
37	3.00	.000	5.0	4.50	20.0	.058	-0.3425	-0.3335
40	4.00	.000	12.4	4.50	20.0	.007	-0.4050	-0.4294
41	3.00	.000	5.0	4.50	20.0	.031	-0.1142	-0.2045*
42	2.00	.000	10.0	4.50	20.0	.079	-0.2564	-0.2589
43	2.00	.000	10.0	4.50	20.0	.056	-0.2030	-0.2349
44	5.00	.000	7.4	4.50	20.0	.019	-0.2070	-0.5756*
45	2.00	.000	12.4	4.50	20.0	.124	-0.2623	-0.1974
46	3.00	.000	10.0	3.50	20.0	.110	-0.3763	-0.2504*
47	4.00	.000	10.0	2.50	20.0	.042	-0.4192	-0.3542
48	4.00	.000	0.1	6.50	20.0	.111	-1.0277	-0.9911
49	6.00	.000	9.9	2.40	20.0	.034	-0.7851	-0.7987
50	4.00	.000	4.9	5.60	20.0	.243	0.2145	-0.4103*
51	3.00	.000	0.0	5.50	20.0	.059	-0.3816	-0.3092
52	4.00	.000	7.5	2.50	20.0	.056	-0.4647	-0.3194*
53	4.00	.000	2.4	3.50	20.0	.112	-0.5002	-0.3576*
54	3.00	.000	2.5	5.50	20.0	.033	-0.1404	-0.2065
55	5.00	.000	0.1	6.50	10.0	.045	-0.8163	-0.8045
56	2.00	.000	10.0	4.60	10.0	.030	-0.1328	-0.1395
57	4.00	.000	5.0	2.50	10.0	.036	-0.1957	-0.2512
58	3.00	.000	12.5	6.50	10.0	-.005	-0.1332	-0.1554
59	4.00	.000	2.5	3.60	5.0	.040	-0.2228	-0.2769
60	4.00	.000	2.5	3.60	5.0	.029	-0.1335	-0.2150*
61	4.00	.000	5.1	3.50	5.0	.043	-0.3650	-0.3115
62	3.00	.000	0.0	2.50	5.0	.054	-0.1712	-0.1832
63	5.00	.000	2.5	2.50	5.0	.035	-0.2217	-0.2571
64	3.00	.000	9.9	2.60	5.0	.013	-0.1170	-0.1919*
65	4.00	.000	5.0	2.60	5.0	.039	-0.2067	-0.2517
66	5.00	.000	5.0	6.60	5.0	.022	-0.2733	-0.4266*
67	3.00	.000	9.9	6.60	5.0	.020	-0.3041	-0.2685
68	6.00	.000	12.4	5.70	5.0	-.006	-0.1966	-0.0591*
69	3.00	.000	-5.1	6.60	5.0	.240	-0.1981	-0.1286
70	6.00	.000	-5.1	5.70	5.0	.016	-0.1947	-0.2439
71	6.00	.000	7.4	5.60	5.0	.012	-0.1860	-0.2786*
72	4.00	.000	12.4	5.60	5.0	.102	-0.8876	-0.8720
73	2.00	.000	0.0	5.60	5.0	.060	-0.1758	-0.1991
74	4.00	.000	2.4	3.60	5.0	.041	-0.2303	-0.2814

TABLE A-16 (cont'd)

MEASURED AND FITTED PITCH MØMENT
BETA=10.DEG

RUN	CV	W	PHI	THETA	PSI	ZT	MEASURED	FITTED
76	5.00	.000	2.4	5.60	0.0	.026	-0.1887	-0.3449*
77	2.00	.000	4.9	5.70	0.0	.329	0.1908	0.3475*
78	6.00	.000	7.5	5.70	0.0	.015	-0.2884	-0.2646
79	3.00	.000	12.4	5.60	0.0	.112	-0.4103	-0.4212
80	3.00	.000	12.4	5.60	0.0	.247	0.0654	0.4309*
81	4.00	.000	12.4	4.60	0.0	.117	-0.4867	-0.5161
82	4.00	.000	4.9	6.60	0.0	.099	-1.1119	-0.9627*
83	3.00	.000	-5.1	6.60	0.0	.049	-0.4079	-0.3874
84	3.00	.000	2.4	2.60	0.0	.044	-0.1149	-0.1856*
85	4.00	.000	7.4	2.60	-5.0	.026	-0.2117	-0.2194
87	2.00	.000	4.9	2.60	-5.0	.135	-0.0726	0.0620*
88	4.00	.000	4.9	2.60	-5.0	.061	-0.3013	-0.2456
89	2.00	.000	7.4	5.70	-5.0	.285	-0.0217	0.3686*
90	6.00	.000	7.5	6.70	-5.0	.014	-0.2861	-0.2926
91	2.00	.000	0.0	4.60	-5.0	.119	-0.1890	-0.2173
92	5.00	.000	0.0	3.60	-5.0	.037	-0.2457	-0.3298
93	6.00	.000	9.9	3.50	-5.0	.110	-0.5516	-0.7715*
94	6.00	.000	9.9	4.60	-5.0	.078	-1.0115	-1.0695
95	6.00	.000	10.0	5.60	-5.0	.002	-0.1683	-0.0190*
97	4.00	.000	9.9	5.60	-5.0	.037	-0.4179	-0.3855
98	5.00	.000	9.9	5.50	-5.0	.097	-0.9770	-1.0305
99	3.00	.000	0.1	6.60	-5.0	.142	-0.5872	-0.6407
100	4.00	.000	4.9	6.60	-5.0	.034	-0.4414	-0.3878
101	4.00	.000	2.4	3.50	5.0	.039	-0.1985	-0.2683
102	6.00	.000	9.9	2.50	0.0	.105	-0.2529	-0.3938*
103	3.00	.000	-5.1	2.50	10.0	.122	-0.0706	0.0935*
105	5.00	.000	10.0	3.50	10.0	.013	-0.3862	-0.3273
106	4.00	.000	5.0	3.50	10.0	.045	-0.3703	-0.3385
107	3.00	.000	7.4	6.50	10.0	.158	-0.6062	-0.6549
108	4.00	.000	12.5	6.60	10.0	-.006	-0.2266	-0.2280*
109	2.00	.000	-5.1	6.60	10.0	.057	-0.1838	-0.1582
110	3.00	.000	2.4	6.50	10.0	.077	-0.6328	-0.5585
111	3.00	.000	-5.1	5.60	10.0	.135	-0.3783	-0.3815
112	3.00	.000	12.5	5.60	10.0	.006	-0.2270	-0.2269
113	4.00	.000	2.4	3.60	5.0	.038	-0.2097	-0.2669
114	4.00	.000	0.0	3.50	15.0	.042	-0.2050	-0.2742
115	4.00	.000	12.5	3.60	15.0	.001	-0.2662	-0.2785
116	3.00	.000	7.4	2.60	15.0	.139	0.1986	0.1095
117	4.00	.000	7.4	2.50	15.0	.030	-0.2073	-0.2779
118	3.00	.000	5.0	2.50	15.0	.067	-0.2583	-0.1783
119	3.00	.000	2.4	2.50	15.0	.057	-0.1703	-0.1694
120	6.00	.000	2.4	2.50	15.0	.069	-0.8764	-0.6815*
121	3.00	.000	0.0	2.60	15.0	.172	0.2694	0.3655
126	6.00	.000	4.9	2.50	20.0	.065	-0.8722	-0.8687
127	4.00	.000	5.0	2.60	20.0	.137	0.1227	0.0094*
128	6.00	.000	12.5	5.50	20.0	.022	-1.4173	-1.4234
129	2.00	.000	12.5	6.60	0.0	.057	-0.1887	-0.2259
130	5.00	.000	6.6	****	7.5	-.181	-0.2645	-0.2537
131	6.00	.000	-5.0	6.70	0.0	.022	-0.2786	-0.4816*
132	3.00	.000	9.9	3.60	0.0	.148	-0.1112	0.0525*

TABLE A-16 (cont'd)

MEASURED AND FITTED PITCH MØMENT
BETA=10.DEG

RUN	CV	W	PHI	THETA	PSI	ZT	MEASURED	FITTED
133	4.00	.000	7.4	3.60	5.0	.145	-0.1557	-0.1819
134	3.00	.000	9.9	3.70	5.0	.224	0.6193	0.6002
135	4.00	.000	2.4	3.60	5.0	.040	-0.2126	-0.2756*
138	4.00	.000	-5.0	5.60	20.0	.221	0.0392	-0.1468
139	4.00	.000	-5.1	3.60	5.0	.044	-0.3703	-0.2821
1	1.97	.049	0.0	3.00	0.0	.057	-0.1265	-0.1384
2	1.98	.050	0.0	3.00	0.0	.058	-0.1231	-0.1395*
3	3.15	.079	0.0	3.00	0.0	.029	-1.0258	-0.1540
4	4.01	.100	0.0	3.00	0.0	.022	-0.1859	-0.1615
6	5.30	.133	0.0	3.00	0.0	.033	-0.2765	-0.2951
8	6.00	.150	0.0	3.00	0.0	.032	-0.3355	-0.3239
10	3.01	.075	-2.5	3.00	0.0	.042	-0.1719	-0.1835
9	3.12	.073	5.0	3.00	0.0	.038	-0.1888	-0.1921
11	3.02	.076	-5.0	3.00	0.0	.037	-0.1763	-0.1798
12	2.95	.074	-7.5	3.00	0.0	.033	-0.1785	-0.1738
13	2.98	.075	-10.0	3.00	0.0	.032	-0.1681	-0.1953
14	2.96	.074	-12.5	3.00	0.0	.026	-0.1554	-0.2062
15	2.95	.074	0.0	2.00	0.0	.064	-0.1675	-0.1559
16	2.99	.075	0.0	4.00	0.0	.047	-0.2200	-0.2170
19	2.72	.068	0.0	5.00	0.0	.041	-0.2557	-0.1923
20	2.68	.067	0.0	5.00	0.0	.041	-0.2508	-0.1901
21	3.14	.079	0.0	6.00	0.0	.033	-0.2863	-0.2331
22	2.01	.050	-7.5	6.00	0.0	.089	-0.2615	-0.2800
23	2.98	.074	0.0	3.00	0.0	.025	-0.0941	-0.1286
24	2.97	.074	0.0	3.00	0.0	.072	-0.2471	-0.2005
25	2.46	.062	0.0	3.00	0.0	.151	0.0795	0.0720
26	3.46	.087	0.0	3.00	0.0	.103	-0.1814	-0.1786*
27	2.96	.074	0.0	3.00	0.0	.127	-0.0043	-0.0406*
28	2.93	.073	0.0	3.00	0.0	.181	0.4390	0.2998*
30	4.49	.112	0.0	3.00	0.0	.193	-0.3932	0.4358*
31	5.03	.126	0.0	3.00	0.0	.115	-0.4065	-0.3549
32	3.15	.079	0.0	3.00	-5.0	.055	-0.2401	-0.2674
34	3.07	.077	-2.5	3.00	-5.0	.054	-0.2419	-0.2668
35	5.82	.146	0.0	3.00	-5.0	.049	-0.6677	-0.5840
36	5.77	.144	-12.5	6.00	-5.0	.008	-0.8830	-0.8656
37	4.91	.123	5.0	2.00	-5.0	.040	-0.3708	-0.3584
38	2.87	.072	-10.0	4.00	-5.0	.157	-0.1347	-0.1142
39	5.96	.149	-12.5	5.00	-5.0	.045	-1.5612	-1.4807*
40	3.00	.075	0.0	3.00	-10.0	.135	-0.2594	-0.1056*
41	6.02	.150	-7.5	5.00	-10.0	.025	-0.8718	-1.0676*
42	2.95	.074	-2.5	2.00	-10.0	.057	-0.2207	-0.2694
43	5.21	.130	-5.0	2.00	-10.0	.022	-0.5358	-0.5248*
46	3.09	.077	-5.0	2.00	-10.0	.092	-0.1102	-0.1775*
47	3.14	.079	-2.5	3.00	-5.0	.036	-0.2444	-0.2374
48	3.09	.077	0.0	3.00	-15.0	.041	-0.3289	-0.3223*
56	5.23	.131	-5.0	3.00	-15.0	.060	-1.4362	-0.9909*
57	5.19	.130	-5.0	2.00	-15.0	.027	-0.7027	-0.7144*
58	5.12	.128	-12.5	5.00	-15.0	.027	-1.7423	-1.3500*
59	3.05	.076	0.0	3.00	-20.0	.048	-0.3975	-0.3570
60	4.17	.104	-12.5	6.00	-20.0	-.007	-0.7773	-0.7923

TABLE A-16 (cont'd)

MEASURED AND FITTED PITCH MØMENT
BETA=10.DEG

RUN	CV	W	PHI	THETA	PSI	ZT	MEASURED	FITTED
62	5.18	.129	5.0	3.00	-20.0	.022	-0.8021	-0.7522
65	4.10	.102	-2.5	6.00	-20.0	.033	-0.7043	-0.7951
66	6.15	.154	-10.0	5.00	-20.0	.004	-1.5378	-1.4785
67	2.11	.053	-7.5	2.00	-20.0	.046	-0.2271	-0.2373*
69	4.05	.101	-5.0	5.00	-20.0	.047	-1.0879	-0.9221
70	3.01	.075	-7.5	2.00	-20.0	.076	-0.3185	-0.3274
71	3.00	.075	0.0	3.00	5.0	.038	-0.1155	-0.1147
72	6.08	.152	-5.0	3.00	5.0	.057	-0.6194	-0.6054*
74	5.05	.126	-10.0	3.00	5.0	.108	-0.1045	-0.4162*
75	6.03	.151	-2.5	5.00	5.0	.047	-1.2614	-0.8119*
76	5.05	.126	-2.5	2.00	5.0	.038	-0.2348	-0.1937
77	5.05	.126	-10.0	5.00	5.0	.031	-0.5945	-0.5517*
78	4.02	.101	-7.5	5.00	5.0	.008	-0.1048	-0.0108*
79	2.04	.051	-10.0	3.00	5.0	.016	-0.0566	-0.0061*
80	5.33	.133	-2.5	3.00	0.0	.061	-0.8295	-0.4941*
82	3.87	.097	-2.5	2.00	0.0	.099	-0.0184	-0.0445*
83	3.02	.075	-2.5	3.00	-5.0	.038	-0.2174	-0.2310
418	1.85	.069	0.0	3.00	0.0	.060	-0.1114	-0.1315
419	2.96	.111	0.0	3.00	0.0	.044	-0.2056	-0.1808
420	3.95	.148	0.0	3.00	0.0	.033	-0.2504	-0.2238
421	5.02	.188	0.0	3.00	0.0	.025	-0.2408	-0.2568
422	6.09	.228	0.0	3.00	0.0	.022	-0.2481	-0.2911
423	3.86	.145	0.0	3.00	0.0	.028	-0.1717	-0.1944
424	3.91	.146	0.0	3.00	0.0	.045	-0.3584	-0.2656*
425	3.96	.148	0.0	3.00	0.0	.067	-0.4600	-0.3063*
426	4.03	.151	0.0	3.00	0.0	.117	-0.0853	-0.1961*
427	4.01	.150	0.0	3.00	0.0	.158	0.4823	0.0872
428	3.99	.150	5.0	3.00	0.0	.027	-0.2705	-0.2016
429	4.02	.151	-2.5	3.00	0.0	.031	-0.2477	-0.2390
430	3.99	.150	-5.0	3.00	0.0	.027	-0.3052	-0.2421
431	4.01	.150	-7.5	3.00	0.0	.017	-0.2684	-0.2247
432	4.00	.150	-10.0	3.00	0.0	.011	-0.2611	-0.2428
433	4.01	.150	-12.5	3.00	0.0	.006	-0.2630	-0.2891
434	3.99	.150	-12.5	3.00	5.0	.007	-0.1283	-0.1517
435	4.00	.150	-12.5	3.00	-5.0	-.002	-0.3949	-0.3599
436	4.02	.151	-12.5	3.00	-10.0	-.004	-0.5452	-0.4790
438	3.97	.149	0.0	3.00	5.0	.032	-0.1128	-0.1062
440	4.01	.150	0.0	3.00	-5.0	.035	-0.3566	-0.3552
441	4.00	.150	0.0	3.00	-10.0	.036	-0.4612	-0.4791
443	3.98	.149	0.0	3.00	-15.0	.040	-0.5922	-0.6069
444	3.98	.149	0.0	3.00	-20.0	.035	-0.7297	-0.7008
445	3.98	.149	0.0	2.00	0.0	.036	-0.1804	-0.2303
446	3.98	.149	0.0	4.00	0.0	.032	-0.2906	-0.2474
448	4.02	.151	0.0	5.00	0.0	.025	-0.2535	-0.2245
449	4.03	.151	0.0	6.00	0.0	.024	-0.2706	-0.2629*
451	1.81	.068	-10.0	4.00	5.0	.132	-0.1024	0.0611
452	4.01	.150	-2.5	3.00	-5.0	.043	-0.4833	-0.4116*
455	4.91	.184	5.0	4.00	-20.0	.131	-0.6883	-1.1331*
456	4.90	.184	-7.5	4.00	5.0	.099	-0.4641	-0.7235*
457	2.92	.109	-2.5	3.00	-5.0	.043	-0.2554	-0.2562

TABLE A-16 (cont'd)

MEASURED AND FITTED PITCH MØMENT
BETA=10.DEG

RUN	CV	W	PHI	THETA	PSI	ZT	MEASURED	FITTED
458	4.00	.150	-7.5	6.00	0.0	.010	-0.2979	-0.2138
459	5.96	.224	0.0	2.00	-5.0	.025	-0.4356	-0.4747
460	5.01	.188	-10.0	5.00	0.0	.045	-0.9124	-0.9596
463	4.02	.151	-12.5	3.00	5.0	.110	-0.0373	-0.1393*
465	5.97	.224	0.0	2.00	5.0	.090	0.0738	-0.2532*
466	5.97	.224	-12.5	5.00	-20.0	.011	-2.5029	-2.1212*
467	4.00	.150	-7.5	6.00	0.0	.011	-0.1664	-0.2279
469	5.05	.189	5.0	4.00	-10.0	.083	-0.9535	-0.8996
470	3.01	.113	-2.5	3.00	0.0	.131	0.0059	-0.0311*
471	2.99	.112	-2.5	3.00	-5.0	.047	-0.2761	-0.2734
473	4.96	.186	-5.0	6.00	-20.0	.024	-1.1278	-1.3888*
475	4.97	.186	-2.5	2.00	-20.0	.086	-0.9896	-1.0559
476	4.97	.186	5.0	3.00	0.0	.031	-0.3896	-0.2566*
483	1.98	.074	-10.0	6.00	-5.0	.168	-0.2375	-0.2391
484	2.91	.109	-2.5	2.00	0.0	.089	-0.0765	-0.0675
485	3.01	.113	0.0	6.00	-20.0	.133	-0.7557	-0.8179
487	3.93	.148	-10.0	2.00	-5.0	.097	-0.0787	-0.2496*
488	3.00	.113	-2.5	3.00	-5.0	.043	-0.2610	-0.2677
489	4.13	.155	-5.0	2.00	5.0	.112	0.1807	0.1292
490	6.08	.228	-5.0	2.00	5.0	.081	-0.0185	-0.4686*
491	4.10	.154	-7.5	3.00	-5.0	.075	-0.6135	-0.5516
492	4.04	.152	0.0	3.00	0.0	.028	-0.1790	-0.2051
494	3.18	.119	-2.5	4.00	-5.0	.140	-0.1924	-0.3248*
496	6.07	.228	5.0	5.00	-15.0	.074	-1.9056	-1.6821*
499	6.05	.227	-10.0	5.00	-15.0	.001	-1.2515	-1.2978
500	4.08	.153	-5.0	6.00	-5.0	.015	-0.3465	-0.3809
502	3.09	.116	-12.5	4.00	0.0	.105	-0.2636	-0.2866
503	3.10	.116	-2.5	4.00	-15.0	.053	-0.5560	-0.5087
505	3.03	.114	-2.5	5.00	5.0	.161	-0.1227	-0.2432*
506	3.02	.113	-2.5	3.00	-5.0	.041	-0.2644	-0.2641
507	3.01	.113	-5.0	2.00	5.0	.092	0.0009	0.0525*
508	2.99	.112	-5.0	5.00	-10.0	.104	-0.6479	-0.6508
512	2.01	.075	-7.5	6.00	-10.0	.220	-0.1289	-0.2101*
513	5.15	.193	-10.0	5.00	-10.0	.042	-1.6565	-1.4059*
514	5.10	.191	-12.5	2.00	-10.0	-.016	-0.5553	-0.6036
795	3.00	.225	0.0	3.00	0.0	.055	-0.1908	-0.1982
796	2.99	.224	5.0	3.00	0.0	.047	-0.1498	-0.1966
797	3.01	.226	-2.5	3.00	0.0	.056	-0.2016	-0.2008
798	3.00	.225	-5.0	3.00	0.0	.051	-0.1868	-0.1956
799	3.01	.226	-7.5	3.00	0.0	.046	-0.1822	-0.1939
800	3.00	.225	-10.0	3.00	0.0	.039	-0.1732	-0.1890
801	3.00	.225	-12.5	3.00	0.0	.033	-0.1643	-0.1937
802	2.99	.224	0.0	3.00	5.0	.054	-0.0435	-0.0305
803	2.99	.224	0.0	3.00	-5.0	.068	-0.3657	-0.3620
804	2.98	.223	0.0	3.00	-10.0	.072	-0.4807	-0.5091
805	2.99	.224	0.0	3.00	-15.0	.075	-0.6101	-0.6566
806	3.00	.225	0.0	3.00	-20.0	.069	-0.7997	-0.7947
807	3.00	.225	0.0	2.00	0.0	.067	-0.1496	-0.1492
808	2.97	.223	0.0	4.00	0.0	.058	-0.2548	-0.2483
809	3.00	.225	0.0	5.00	0.0	.053	-0.2773	-0.2933

TABLE A-16 (cont'd)

MEASURED AND FITTED PITCH MØMENT
BETA=10.DEG

RUN	CV	W	PHI	THETA	PSI	ZT	MEASURED	FITTED
810	2.99	.224	0.0	6.00	0.0	.056	-0.3571	-0.3761
811	3.00	.225	0.0	3.00	0.0	.051	-0.1458	-0.1933
812	3.00	.225	0.0	3.00	0.0	.082	-0.2316	-0.1952
813	3.00	.225	0.0	3.00	0.0	.130	-0.0538	-0.0425
815	2.01	.151	0.0	3.00	0.0	.104	-0.1012	-0.0941
816	2.51	.188	-2.5	3.00	0.0	.069	-0.1694	-0.1471
817	3.01	.226	0.0	6.00	-20.0	.066	-0.9759	-0.9670
818	3.02	.226	5.0	6.00	-5.0	.175	-0.4322	-0.4408
819	3.02	.226	-2.5	6.00	5.0	.211	-0.0469	-0.2253*
820	2.03	.152	0.0	4.00	-10.0	.205	-0.0521	-0.0920*
821	3.01	.226	-12.5	3.00	-10.0	.017	-0.4644	-0.4967
822	3.01	.226	-2.5	3.00	-5.0	.065	-0.3720	-0.3760
823	2.02	.152	-12.5	3.00	-10.0	.093	-0.2425	-0.1772
824	2.52	.189	-10.0	3.00	5.0	.111	-0.0352	0.1493*
825	2.01	.150	-5.0	3.00	-15.0	.112	-0.2863	-0.3231
826	2.48	.186	-12.5	6.00	-10.0	.190	-0.4462	-0.6351*
827	2.48	.186	-12.5	5.00	5.0	.281	0.1753	0.7749*
828	2.99	.224	0.0	3.00	-5.0	.084	-0.3535	-0.3509
829	1.99	.149	5.0	6.00	-10.0	.287	-0.0679	0.1890*
830	2.00	.150	-5.0	3.00	-10.0	.076	-0.2558	-0.2704
831	2.50	.187	-2.5	5.00	-20.0	.248	-0.0371	-0.4556*
832	2.99	.224	-2.5	3.00	-5.0	.065	-0.3866	-0.3721
833	1.96	.147	-5.0	6.00	-5.0	.263	-0.0734	-0.0992
834	2.95	.221	5.0	5.00	0.0	.063	-0.3277	-0.2878
835	2.96	.222	-5.0	6.00	0.0	.034	-0.2557	-0.2796
836	1.98	.148	-12.5	3.00	-20.0	.019	-0.3775	-0.3158
839	2.06	.155	5.0	4.00	0.0	.192	0.0678	0.1298*
840	2.03	.153	-7.5	3.00	5.0	.088	-0.0361	0.0606*
841	2.98	.223	0.0	5.00	-20.0	.219	-0.2335	-0.6755*
842	2.99	.224	-7.5	6.00	-15.0	.031	-0.7687	-0.8367
845	2.98	.223	5.0	6.00	-10.0	.174	-0.5082	-0.5327
846	3.01	.226	-2.5	3.00	-5.0	.053	-0.3743	-0.3628
847	2.54	.190	-7.5	5.00	0.0	.242	0.1454	0.1167
848	3.01	.226	-10.0	5.00	0.0	.204	-0.0051	-0.1914*
849	2.55	.191	0.0	5.00	-5.0	.046	-0.3410	-0.2950
850	2.54	.191	-2.5	4.00	-15.0	.180	-0.1436	-0.4135*
851	2.08	.156	0.0	5.00	5.0	.038	-0.0627	0.0066*
852	2.53	.190	5.0	6.00	-20.0	.212	-0.3779	-0.3398
853	2.05	.154	-5.0	8.00	-15.0	.288	-0.3018	-0.2769
855	3.01	.226	-5.0	2.00	5.0	.074	0.0272	0.0690*
856	2.53	.190	-12.5	4.00	-10.0	.182	0.0022	-0.2095*
857	3.00	.225	-2.5	3.00	-5.0	.049	-0.3724	-0.3546
858	2.99	.224	-5.0	4.00	0.0	.157	-0.0237	-0.1702*
859	2.53	.190	-5.0	6.00	-5.0	.169	-0.3624	-0.5734*
861	2.54	.190	-12.5	4.00	-5.0	.209	0.1236	0.1428
862	2.97	.223	-12.5	5.00	-20.0	.057	-1.2734	-1.2213
863	3.00	.225	-5.0	4.00	-5.0	.026	-0.3002	-0.2988

MEAN ERRØR= 0.0170
STANDARD DEVIATIØN= 0.1568

TABLE A-17

MEASURED AND FITTED PITCH MØMENT
BETA=15.DEG

RUN	CV	W	PHI	THETA	PSI	ZT	MEASURED	FITTED
141	4.00	.000	5.0	3.60	5.0	.050	-0.2375	-0.2248
143	3.00	.000	4.7	2.60	0.0	.053	-0.1227	-0.1451
144	6.00	.000	14.8	3.00	0.0	.149	0.1003	-0.1342*
145	4.00	.000	4.8	3.60	0.0	.050	-0.2396	-0.2169
146	4.00	.000	-5.2	3.60	0.0	.050	-0.2467	-0.2199
153	2.00	.000	-2.1	3.60	0.0	.114	-0.1449	-0.2032
157	4.00	.000	9.8	3.60	0.0	.035	-0.2512	-0.1868
158	4.00	.000	14.7	3.60	0.0	.014	-0.2506	-0.1714
159	3.00	.000	14.7	3.60	0.0	.169	-0.0617	0.0416*
160	4.00	.000	19.8	3.60	0.0	-.005	-0.2519	-0.2575
161	4.00	.000	19.8	4.60	0.0	.155	-0.2261	-0.2932
162	4.00	.000	19.7	4.60	0.0	.162	-0.2440	-0.2288
165	2.00	.000	4.7	5.60	0.0	.371	0.2066	0.2261
166	6.00	.000	9.7	5.60	0.0	.029	-0.3344	-0.3047
167	3.00	.000	19.7	5.60	0.0	.161	-0.2815	-0.2940
168	3.00	.000	19.7	5.60	0.0	.280	0.0973	0.7929*
169	2.00	.000	19.7	6.60	0.0	.067	-0.2003	-0.3125
170	5.00	.000	9.7	6.60	0.0	.030	-0.3008	-0.3308*
171	4.00	.000	9.7	6.60	0.0	.147	-0.8982	-0.8136
172	3.00	.000	-5.3	6.60	0.0	.082	-0.4194	-0.4282
174	6.00	.000	-5.2	6.60	0.0	.039	-0.3517	-0.3581
175	4.00	.000	4.7	3.60	5.0	.061	-0.2495	-0.2812
185	4.00	.000	4.7	3.60	5.0	.046	-0.1568	-0.2027
186	4.00	.000	-0.3	3.60	5.0	.065	-0.2429	-0.2756
187	3.00	.000	-5.3	3.60	5.0	.119	-0.2293	-0.2481
189	5.00	.000	-0.3	2.50	5.0	.063	-0.2604	-0.3044
191	4.00	.000	9.8	3.60	5.0	.173	-0.0922	-0.1060
192	4.00	.000	9.7	3.60	5.0	.177	-0.1014	-0.0830
193	3.00	.000	14.7	3.70	5.0	.250	0.6273	0.6154
194	3.00	.000	14.7	3.60	5.0	.017	-0.1492	-0.1387
195	3.00	.000	14.7	1.60	5.0	.048	-0.1314	-0.1438
196	6.00	.000	-5.2	5.60	5.0	.035	-0.2410	-0.2994
197	6.00	.000	9.7	5.60	5.0	.026	-0.2231	-0.2740
198	6.00	.000	19.8	5.60	5.0	-.016	-0.2472	-0.2192
199	2.00	.000	-0.3	5.60	5.0	.101	-0.1982	-0.2217
200	2.00	.000	-5.3	5.60	5.0	.257	-0.1356	-0.0906*
201	4.00	.000	19.8	5.60	5.0	.139	-0.6296	-0.7426
202	5.00	.000	14.7	6.60	5.0	.010	-0.2279	-0.2822
203	5.00	.000	4.7	6.60	5.0	.036	-0.3090	-0.2858
204	5.00	.000	4.8	6.60	5.0	.037	-0.3131	-0.2969
205	3.00	.000	-5.3	6.60	5.0	.279	-0.1197	-0.1096
206	4.00	.000	4.7	3.60	5.0	.055	-0.2397	-0.2500
207	4.00	.000	-0.3	3.60	-5.0	.063	-0.2462	-0.2666
208	6.00	.000	14.7	3.60	-5.0	.155	-0.1470	-0.1653*
210	5.00	.000	-0.3	2.50	-5.0	.103	-0.5451	-0.3114
211	4.00	.000	4.7	2.60	-5.0	.094	-0.2999	-0.2438
212	2.00	.000	4.7	2.60	-5.0	.162	-0.0699	-0.0488
213	4.00	.000	9.8	2.60	-5.0	.043	-0.2461	-0.1885
214	2.00	.000	-0.3	4.60	-5.0	.170	-0.1696	-0.2271
215	6.00	.000	14.8	4.60	-5.0	.126	-0.7053	-0.6957

TABLE A-17 (cont'd)

MEASURED AND FITTED PITCH MØMENT
BETA=15.DEG

RUN	CV	W	PHI	THETA	PSI	ZT	MEASURED	FITTED
216	5.00	.000	14.7	5.50	-5.0	.150	-0.6777	-0.6373*
218	3.00	.000	9.7	5.60	-5.0	.242	-0.1283	0.0239*
219	4.00	.000	9.7	5.60	-5.0	.045	-0.4594	-0.3435
220	6.00	.000	14.8	5.60	-5.0	.007	-0.2613	-0.3487
221	6.00	.000	14.8	6.60	-5.0	.005	-0.3574	-0.3397
222	4.00	.000	9.7	6.60	-5.0	.044	-0.4921	-0.4041
223	3.00	.000	19.7	6.60	10.0	-.009	-0.2009	-0.2514
224	4.00	.000	19.7	6.60	10.0	-.014	-0.3119	-0.2429
225	2.00	.000	-5.3	6.60	10.0	.104	-0.2122	-0.1949
226	3.00	.000	4.7	6.60	10.0	.117	-0.6270	-0.5662*
227	5.00	.000	-0.3	6.50	10.0	.070	-0.8317	-0.6364
228	3.00	.000	14.8	6.60	10.0	.191	-0.5410	-0.5808*
231	3.00	.000	19.8	4.60	10.0	.179	-0.0379	-0.1320*
232	5.00	.000	14.7	4.50	10.0	.035	-0.7332	-0.4971*
233	2.00	.000	14.7	4.60	10.0	.037	-0.1298	-0.1548
234	4.00	.000	4.8	3.60	5.0	.054	-0.2282	-0.2497
235	5.00	.000	4.8	3.50	10.0	.118	-0.8876	-0.4728*
238	3.00	.000	9.7	3.60	10.0	.240	0.5252	0.2798*
239	4.00	.000	9.8	3.60	10.0	.059	-0.3770	-0.3525
240	5.00	.000	8.6	3.50	10.0	.020	-0.4321	-0.1443*
241	3.00	.000	4.8	3.60	10.0	.131	-0.1767	-0.2884
242	4.00	.000	-0.3	3.60	10.0	.064	-0.2405	-0.2787*
243	4.00	.000	9.7	2.60	10.0	.050	-0.2532	-0.2634
244	3.00	.000	19.7	5.60	10.0	-.003	-0.2368	-0.2630
245	3.00	.000	-4.9	5.50	10.0	.180	-0.3021	-0.3351
246	5.00	.000	-5.2	5.50	15.0	.077	-0.9213	-0.6393*
247	3.00	.000	-0.3	5.60	15.0	.165	-0.4002	-0.4246
248	5.00	.000	14.8	5.50	15.0	.029	-0.7938	-0.5145*
249	6.00	.000	14.7	5.60	15.0	.016	-0.5066	-0.4730
250	5.00	.000	-0.3	5.50	15.0	.044	-0.2876	-0.3620
251	2.00	.000	4.7	6.60	15.0	.091	-0.2087	-0.1863
252	6.00	.000	3.9	6.60	15.0	.026	-0.3107	-0.3105
253	3.00	.000	19.7	6.60	15.0	.018	-0.4184	-0.4544
254	4.00	.000	-5.3	6.60	15.0	.150	-0.7226	-0.6958
255	6.00	.000	-5.3	4.60	15.0	.067	-0.8496	-0.7701
256	3.00	.000	14.7	4.60	15.0	.094	-0.4702	-0.4597
257	5.00	.000	9.8	4.50	15.0	.077	-0.9602	-0.6913*
258	3.00	.000	4.7	4.60	15.0	.266	0.3267	0.1471*
260	4.00	.000	-0.3	4.60	15.0	.230	0.0466	0.0901*
261	4.00	.000	-0.3	4.60	15.0	.049	-0.1921	-0.2416
262	3.00	.000	9.8	4.60	15.0	.056	-0.2363	-0.2780
263	6.00	.000	9.8	4.60	15.0	.033	-0.2945	-0.5285*
264	4.00	.000	-0.3	3.60	15.0	.069	-0.2568	-0.3050
265	6.00	.000	19.8	3.60	15.0	-.009	-0.4188	-0.4275
266	4.00	.000	9.8	2.60	15.0	.053	-0.2430	-0.3053
267	3.00	.000	9.8	2.60	15.0	.095	-0.2523	-0.2597
268	3.00	.000	4.7	2.60	15.0	.089	-0.2019	-0.2322
270	6.00	.000	4.8	2.50	15.0	.099	-0.8529	-0.7250*
271	6.00	.000	4.8	2.50	15.0	.097	-0.8546	-0.7299*
275	4.00	.000	9.8	2.50	15.0	.117	-0.4130	-0.3363

TABLE A-17 (cont'd)

MEASURED AND FITTED PITCH MOMENT
BETA=15.DEG

RUN	CV	W	PHI	THETA	PSI	ZT	MEASURED	FITTED
276	4.00	.000	4.8	3.60	5.0	.058	-0.2466	-0.2662
277	4.00	.000	-0.3	3.60	20.0	.068	-0.2662	-0.3061
277	3.00	.000	14.7	3.50	20.0	.049	-0.3197	-0.2952
279	4.00	.000	4.8	3.50	20.0	.133	-0.5162	-0.4095*
280	6.00	.000	4.8	2.50	20.0	.100	-0.8935	-0.9198
281	5.00	.000	4.8	2.50	20.0	.168	0.2786	-0.2065*
282	6.00	.000	14.	2.50	20.0	.028	-0.7198	-0.8439*
283	4.00	.000	14.7	2.50	20.0	.034	-0.3713	-0.3310
286	4.00	.000	14.7	2.50	20.0	.020	-0.2372	-0.2418
286	3.00	.000	9.7	4.50	20.0	.043	-0.1585	-0.1990
287	3.00	.000	9.7	4.50	20.0	.075	-0.3474	-0.3482
288	4.00	.000	19.8	4.50	20.0	-.004	-0.4258	-0.2560*
289	2.00	.000	14.7	4.50	20.0	.098	-0.2495	-0.2435
290	2.00	.000	19.8	4.60	20.0	.136	-0.2265	-0.1666
294	3.00	.000	-0.3	5.50	20.0	.090	-0.3832	-0.3094
295	3.00	.000	-0.3	5.60	20.0	.056	-0.1669	-0.1592
296	4.00	.000	-0.3	6.60	20.0	.046	-0.2038	-0.2551
297	4.00	.000	4.7	3.60	5.0	.059	-0.2681	-0.2720
298	4.00	.000	4.8	1.60	5.0	.082	-0.2252	-0.2020
299	4.00	.000	14.7	1.60	5.0	.038	-0.2037	-0.2268
300	5.00	.000	-0.3	1.50	15.0	.051	-0.3942	-0.3673
109	2.35	.059	0.0	3.00	0.0	.069	-0.1120	-0.1621
110	2.92	.073	0.0	3.00	0.0	.060	-0.1469	-0.1662
111	3.88	.097	0.0	3.00	0.0	.052	-0.2260	-0.1965
112	4.95	.124	0.0	3.00	0.0	.045	-0.2918	-0.2682
113	6.02	.150	0.0	3.00	0.0	.037	-0.3893	-0.3819
114	2.87	.072	0.0	3.00	0.0	.049	-0.1179	-0.1269
115	3.02	.076	0.0	3.00	0.0	.081	-0.2434	-0.2170
116	3.01	.075	0.0	3.00	0.0	.155	0.0147	-0.1188*
117	2.82	.071	0.0	3.00	0.0	.156	-0.0003	-0.1176*
119	4.03	.101	0.0	3.00	0.0	.181	0.4397	0.0933*
120	3.03	.076	5.0	3.00	0.0	.059	-0.2007	-0.1794
121	3.02	.075	-5.0	3.00	0.0	.056	-0.2025	-0.1611
122	2.87	.072	-10.0	3.00	0.0	.052	-0.1662	-0.1545
123	2.89	.072	-15.0	3.00	0.0	.046	-0.1552	-0.1760
124	3.05	.076	-20.0	3.00	0.0	.040	-0.1506	-0.2585*
125	3.06	.076	0.0	3.00	5.0	.058	-0.1040	-0.1110
127	3.01	.075	0.0	3.00	-10.0	.067	-0.2525	-0.2858
128	3.03	.076	0.0	3.00	-15.0	.066	-0.3200	-0.3300
129	3.01	.075	0.0	3.00	-20.0	.055	-0.3994	-0.3400
130	2.99	.075	0.0	2.00	0.0	.066	-0.0549	-0.1463*
131	3.02	.075	0.0	4.00	0.0	.063	-0.2026	-0.2145
132	3.06	.076	0.0	5.00	0.0	.054	-0.1997	-0.2085
133	3.06	.076	0.0	6.00	0.0	.057	-0.2755	-0.2596
136	4.04	.101	-5.0	3.00	0.0	.095	-0.3547	-0.3088
137	6.09	.152	-15.0	5.00	-10.0	.003	-1.0072	-0.9831
138	6.05	.151	-20.0	6.00	-5.0	-.018	-0.9063	-0.8828
139	4.02	.100	-20.0	6.00	-20.0	-.022	-0.6866	-0.6968
140	5.00	.125	5.0	3.00	-20.0	.022	-0.6637	-0.9002*
141	4.99	.125	5.0	3.00	-20.0	.021	-0.7066	-0.8912*

TABLE A-17 (cont'd)

MEASURED AND FITTED PITCH MOMENT
BETA=15.DEG

RUN	CV	W	PHI	THETA	PSI	ZT	MEASURED	FITTED
142	2.91	.073	-5.0	3.00	-5.0	.056	-0.2193	-0.2122
143	1.65	.041	-10.0	6.00	0.0	.153	-0.1571	-0.1565
144	3.79	.095	-10.0	3.00	-20.0	.093	-0.9466	-0.6944*
145	4.76	.119	5.0	2.00	-5.0	.045	-0.3421	-0.3702
147	3.87	.097	-5.0	6.00	-20.0	.026	-0.5976	-0.5338
148	5.86	.146	-10.0	3.00	5.0	.097	-0.2077	-0.5094*
150	3.94	.098	-15.0	4.00	-5.0	.093	-0.5311	-0.6158
151	2.95	.074	-10.0	2.00	-10.0	.105	-0.0958	-0.2160*
154	4.78	.120	-5.0	3.00	-5.0	.032	-0.3333	-0.3342
156	3.00	.075	0.0	2.00	-10.0	.053	-0.2027	-0.2223
157	3.02	.076	-5.0	6.00	-15.0	.050	-0.4438	-0.4052
158	3.99	.100	-5.0	6.00	-15.0	.040	-0.6029	-0.6139
160	2.40	.060	-10.0	2.00	-20.0	.044	-0.2686	-0.2504
161	6.18	.154	5.0	3.00	-20.0	.044	-1.9841	-1.7346*
162	6.21	.155	5.0	3.00	-20.0	.040	-1.9283	-1.7495*
163	6.18	.154	-10.0	2.00	-15.0	.004	-0.6953	-1.2146*
164	4.38	.110	-10.0	5.00	-20.0	.041	-1.1258	-0.9378*
165	3.23	.081	-10.0	2.00	-20.0	.082	-0.4067	-0.4408
166	2.15	.054	-10.0	4.00	-15.0	.037	-0.2051	-0.1953
167	2.64	.066	-5.0	3.00	-5.0	.065	-0.1882	-0.2109
168	5.65	.141	-5.0	5.00	5.0	.073	-1.0763	-0.5797*
169	4.72	.118	-5.0	2.00	-10.0	.052	-0.4699	-0.5435
170	5.81	.145	5.0	3.00	-5.0	.040	-0.6292	-0.5817
171	4.74	.118	0.0	2.00	5.0	.064	-0.2015	-0.1808
173	5.91	.148	-5.0	3.00	0.0	.077	-0.8220	-0.5832*
174	4.83	.121	-20.0	5.00	5.0	.045	-0.4189	-0.8651*
175	6.04	.151	-20.0	5.00	-5.0	.020	-1.4943	-1.3565*
177	3.75	.094	-10.0	5.00	5.0	.013	-0.0912	0.0122*
178	2.96	.074	-5.0	3.00	-5.0	.048	-0.1927	-0.1889
180	3.18	.079	-15.0	4.00	-10.0	.111	-0.5299	-0.5030
181	5.11	.128	-5.0	2.00	-15.0	.046	-0.6681	-0.8482*
182	2.15	.054	-15.0	3.00	5.0	.002	-0.0409	0.0230*
183	4.91	.123	-20.0	5.00	-15.0	.012	-1.5942	-1.2210*
184	5.08	.127	5.0	4.00	0.0	.071	-0.8155	-0.4606*
527	1.82	.068	0.0	3.00	0.0	.112	-0.0950	-0.1606*
528	2.87	.108	0.0	3.00	0.0	.076	-0.1965	-0.1937
529	3.87	.145	0.0	3.00	0.0	.052	-0.2347	-0.2099
530	4.98	.187	0.0	3.00	0.0	.043	-0.2708	-0.3266
531	5.97	.224	0.0	3.00	0.0	.037	-0.3112	-0.5221*
532	2.96	.111	0.0	3.00	0.0	.052	-0.1315	-0.1382
533	2.97	.111	0.0	3.00	0.0	.104	-0.2103	-0.2163
534	2.96	.111	0.0	3.00	0.0	.154	0.0134	-0.1055*
536	3.98	.149	0.0	3.00	0.0	.146	-0.0005	-0.1519*
537	3.97	.149	0.0	3.00	0.0	.195	0.5571	0.2261*
538	2.96	.111	5.0	3.00	0.0	.075	-0.1887	-0.2044
539	2.96	.111	-5.0	3.00	0.0	.074	-0.2052	-0.1921
540	3.00	.112	-10.0	3.00	0.0	.063	-0.1880	-0.1810
541	2.97	.111	-15.0	3.00	0.0	.044	-0.1689	-0.1752
542	2.98	.112	-20.0	3.00	0.0	.019	-0.1539	-0.2161
543	2.98	.112	0.0	3.00	5.0	.074	-0.1545	-0.1235

TABLE A-17 (cont'd)

MEASURED AND FITTED PITCH MØMENT
BETA=15.DEG

RUN	CV	W	PHI	THETA	PSI	ZT	MEASURED	FITTED
544	2.98	.112	0.0	3.00	-5.0	.073	-0.2864	-0.2748
545	2.99	.112	0.0	3.00	-10.0	.079	-0.3455	-0.3427
546	2.97	.112	0.0	3.00	-20.0	.057	-0.5041	-0.4360
547	2.99	.112	0.0	3.00	-15.0	.084	-0.4052	-0.4056
548	2.97	.111	0.0	2.00	0.0	.080	-0.1484	-0.1474
549	2.98	.112	0.0	4.00	0.0	.060	-0.2184	-0.2036
550	2.97	.112	0.0	5.00	0.0	.059	-0.2777	-0.2323
551	3.01	.113	0.0	6.00	0.0	.055	-0.3020	-0.2531*
552	1.90	.071	-15.0	4.00	5.0	.136	-0.0894	0.0623
553	4.03	.151	-5.0	3.00	-5.0	.064	-0.4918	-0.4309*
555	5.98	.224	5.0	4.00	-20.0	.064	-1.9044	-2.0884*
556	4.99	.187	-10.0	4.00	5.0	.136	-0.1867	-0.4102
558	3.99	.150	-15.0	6.00	0.0	.003	-0.4067	-0.3653
559	3.00	.113	-5.0	3.00	-5.0	.071	-0.2848	-0.2764*
560	6.00	.225	0.0	2.00	-5.0	.051	-0.6242	-0.8870*
561	5.00	.188	-15.0	5.00	0.0	.065	-0.7946	-1.0154*
564	6.01	.225	-20.0	3.00	5.0	.054	-0.1600	-1.0694*
566	6.01	.225	0.0	3.00	5.0	.086	-0.7283	-0.4928*
567	6.00	.225	-20.0	5.00	-20.0	-.008	-2.7085	-2.4815
568	3.98	.149	-10.0	6.00	0.0	.014	-0.2743	-0.2438
569	3.97	.149	5.0	4.00	-10.0	.169	-0.2275	-0.2653*
570	2.99	.112	-5.0	3.00	0.0	.146	-0.0208	-0.1123*
571	4.97	.186	-5.0	6.00	-20.0	.049	-1.3481	-1.6153
572	3.00	.112	-5.0	3.00	-5.0	.071	-0.2791	-0.2752
573	5.95	.223	-5.0	2.00	-20.0	.082	-1.9351	-1.9319*
577	4.97	.186	5.0	3.00	-20.0	.106	-0.7246	-1.0836*
579	1.99	.075	-15.0	6.00	-5.0	.186	-0.2352	-0.1991
580	2.96	.111	0.0	6.00	-20.0	.191	-0.5185	-0.5550*
581	6.00	.225	-20.0	2.00	0.0	-.006	-0.3873	-0.9120*
583	5.95	.223	-15.0	2.00	-5.0	.050	-0.6993	-1.1543
585	6.01	.225	-10.0	3.00	-5.0	.058	-1.1041	-1.1287
586	2.96	.111	-5.0	3.00	-5.0	.072	-0.2776	-0.2713
588	3.91	.147	-5.0	3.00	-5.0	.125	-0.3448	-0.3575
593	4.03	.151	-10.0	6.00	-5.0	.021	-0.4811	-0.4879
594	2.97	.111	-20.0	4.00	0.0	.138	-0.1185	-0.1094
595	3.01	.113	0.0	4.00	-15.0	.104	-0.4968	-0.4808
596	2.03	.076	-5.0	5.00	5.0	.276	0.0985	0.0810
598	3.01	.113	-10.0	5.00	-10.0	.128	-0.6541	-0.6102
599	3.02	.113	-5.0	3.00	-5.0	.073	-0.2843	-0.2812*
600	2.01	.075	-10.0	6.00	-10.0	.254	-0.0808	-0.1902
601	5.02	.188	-20.0	5.00	-10.0	.026	-1.5415	-1.5474
602	5.05	.189	-20.0	2.00	-10.0	-.030	-0.6962	-0.7221
603	3.05	.114	-15.0	5.00	-15.0	.036	-0.6580	-0.6373*
604	5.99	.225	-10.0	4.00	-15.0	.052	-2.1114	-1.9305
618	1.92	.144	0.0	3.00	0.0	.073	-0.0879	-0.1152
619	2.99	.224	0.0	3.00	0.0	.070	-0.1550	-0.1690
620	2.50	.188	0.0	3.00	0.0	.078	-0.1232	-0.1323*
621	3.07	.230	0.0	3.00	0.0	.050	-0.0888	-0.1390
622	3.06	.230	0.0	3.00	0.0	.086	-0.2170	-0.1884
623	3.05	.228	0.0	3.00	0.0	.136	-0.0823	-0.0945

TABLE A-17 (cont'd)

MEASURED AND FITTED PITCH MØMENT
BETA=15.DEG

RUN	CV	W	PHI	THETA	PSI	ZT	MEASURED	FITTED
625	3.01	.226	5.0	3.00	0.0	.061	-0.1595	-0.1728
626	2.99	.224	-5.0	3.00	0.0	.066	-0.1699	-0.1562
627	3.01	.226	-10.0	3.00	0.0	.049	-0.1598	-0.1363
628	3.00	.225	-15.0	3.00	0.0	.028	-0.1487	-0.1303
629	3.01	.226	-20.0	3.00	0.0	.003	-0.1360	-0.1756
630	2.98	.223	0.0	3.00	5.0	.063	-0.0191	-0.0017*
631	2.97	.223	0.0	3.00	-5.0	.070	-0.2862	-0.3126
632	2.96	.222	0.0	3.00	-10.0	.071	-0.4039	-0.4486
633	2.97	.223	0.0	3.00	-15.0	.072	-0.5345	-0.5809
634	2.97	.223	0.0	3.00	-20.0	.053	-0.7671	-0.7192
635	2.97	.223	0.0	2.00	0.0	.062	-0.0974	-0.0896
636	2.98	.223	0.0	4.00	0.0	.060	-0.2019	-0.2120
637	2.98	.223	0.0	5.00	0.0	.053	-0.2194	-0.2405
638	2.98	.223	0.0	6.00	0.0	.048	-0.2362	-0.2670
639	2.47	.185	0.0	6.00	-20.0	.058	-0.5429	-0.5813
640	2.48	.186	5.0	6.00	-5.0	.232	-0.1693	-0.1359
641	2.96	.222	-5.0	3.00	-5.0	.108	-0.3290	-0.2811
642	2.48	.186	-5.0	6.00	5.0	.275	0.1262	0.0515*
643	1.97	.148	0.0	4.00	-10.0	.206	-0.0607	-0.0743
644	2.50	.187	-20.0	3.00	-10.0	-.010	-0.3341	-0.3275
645	1.99	.149	-20.0	3.00	-10.0	.069	-0.1979	-0.1417
646	2.96	.222	-5.0	3.00	-5.0	.061	-0.3079	-0.3027
660	2.99	.224	-15.0	3.00	5.0	.071	0.0057	0.0304*
661	1.99	.150	-5.0	3.00	-15.0	.106	-0.2908	-0.2813
66[illegible]	2.99	.224	-20.0	6.00	-10.0	.108	-0.9002	-1.1697*
665	2.51	.188	0.0	3.00	-5.0	.092	-0.2129	-0.2344
667	3.00	.225	5.0	6.00	-10.0	.181	-0.4627	-0.4943
668	2.00	.150	-5.0	3.00	-10.0	.066	-0.2219	-0.2274
670	2.99	.224	-5.0	5.00	-20.0	.158	-0.7886	-0.7935
671	2.51	.188	5.0	5.00	0.0	.043	-0.1885	-0.1039
672	2.99	.224	-5.0	3.00	-5.0	.056	-0.3174	-0.3030
673	1.99	.149	-5.0	6.00	-5.0	.255	-0.0886	-0.1725*
674	2.50	.188	5.0	5.00	0.0	.091	-0.2237	-0.2489
675	2.50	.188	-5.0	6.00	0.0	.037	-0.1837	-0.1307
676	1.99	.149	-20.0	3.00	-20.0	-.023	-0.3678	-0.3544
678	1.99	.149	-10.0	3.00	5.0	.079	-0.0268	0.0489*
681	2.51	.188	-10.0	6.00	-15.0	.034	-0.5295	-0.6007
682	2.50	.187	5.0	6.00	-10.0	.256	-0.2027	-0.0111*
683	2.97	.223	-5.0	3.00	-5.0	.075	-0.3090	-0.3155
685	2.99	.224	-15.0	6.00	0.0	.229	-0.2123	-0.1645
686	2.50	.188	-15.0	8.00	0.0	.279	-0.3299	-0.3611
688	2.99	.224	0.0	5.00	-15.0	.185	-0.5370	-0.4624
689	2.00	.150	0.0	5.00	5.0	.077	-0.0778	-0.0608
690	3.00	.225	5.0	6.00	-20.0	.124	-1.0224	-0.8255*
691	2.02	.152	-5.0	8.00	-15.0	.342	-0.2144	-0.3934*
693	2.46	.185	-10.0	2.00	5.0	.086	-0.0070	0.1579*
694	2.96	.222	-20.0	4.00	-10.0	.124	-0.5366	-0.5280
695	2.96	.222	-5.0	3.00	-5.0	.073	-0.3077	-0.3138
697	2.47	.185	-10.0	6.00	0.0	.224	-0.1812	-0.2001
698	2.99	.224	-10.0	6.00	-5.0	.134	-0.7414	-0.7866

TABLE A-17 (cont'd)

MEASURED AND FITTED PITCH MØMENT
BETA=15.DEG

RUN	CV	W	PHI	THETA	PSI	ZT	MEASURED	FITTED
699	3.00	.225	5.0	8.00	-10.0	.222	-0.7089	-0.6948
700	3.00	.225	-20.0	4.00	-5.0	.177	-0.2130	0.0300*
701	2.48	.186	-20.0	5.00	-20.0	.087	-0.8531	-0.8816

MEAN ERRØR= -0.0762
STANDARD DEVIATIØN= 0.1192

DATA FILE

TABLE A-18

MEASURED AND FITTED PITCH MØMENT
BETA=20.DEG

RUN	CV	W	PHI	THETA	PSI	ZT	MEASURED	FITTED
316	4.00	.000	4.8	3.70	5.0	.086	-0.2579	-0.3012
317	4.00	.000	4.7	3.70	5.0	.088	-0.2570	-0.3059
318	4.00	.000	4.7	3.60	0.0	.131	-0.2629	-0.3210
326	4.00	.000	4.7	3.60	0.0	.116	-0.3902	-0.3246
328	4.00	.000	9.7	3.70	0.0	.070	-0.2676	-0.2534
329	4.00	.000	14.7	3.70	0.0	.047	-0.2636	-0.2107
330	4.00	.000	19.8	3.60	0.0	.025	-0.2811	-0.1975
331	4.00	.000	27.2	3.60	0.0	-.006	-0.2546	-0.2900 *
332	3.00	.000	19.7	3.60	0.0	.191	-0.0092	0.1269
337	4.00	.000	27.3	4.70	0.0	.179	-0.0715	-0.0944
340	3.00	.000	4.7	2.60	0.0	.098	-0.1555	-0.1928
342	6.00	.000	19.8	3.70	0.0	.141	-0.3005	-0.5464 *
344	3.00	.000	27.3	5.70	0.0	281	0.1502	0.8080 *
345	3.00	.000	27.3	5.60	0.0	.173	-0.2005	-0.1289
349	5.00	.000	4.8	5.60	0.0	.053	-0.2234	-0.3338 *
351	6.00	.000	-5.3	6.70	0.0	.051	-0.3626	-0.4812 *
353	2.00	.000	27.2	6.70	0.0	.068	-0.1777	-0.2073
354	3.00	.000	-5.3	6.60	0.0	.110	-0.4030	-0.3837
355	4.00	.000	9.8	6.70	0.0	.186	-0.8032	-0.6015 *
356	3.00	.000	-0.3	6.70	-5.0	.236	-0.4295	-0.4303
357	4.00	.000	9.7	6.70	-5.0	.069	-0.4614	-0.3314 *
358	4.00	.000	9.7	6.70	-5.0	.060	-0.4572	-0.2654 *
359	4.00	.000	9.7	6.70	-5.0	.061	-0.4601	-0.2700 *
362	4.00	.000	9.7	5.60	-5.0	.065	-0.4333	-0.3041 *
364	3.00	.000	14.7	5.70	-5.0	.266	-0.0626	0.1431
365	5.00	.000	19.8	5.60	-5.0	.170	-0.4498	-0.5065 *
366	6.00	.000	19.8	4.70	-5.0	.132	-0.5586	-0.7361
368	4.00	.000	9.7	2.60	-5.0	.109	-0.2191	-0.2275 *
369	2.00	.000	9.7	2.60	-5.0	.172	-0.0494	-0.0094 *
370	4.00	.000	14.7	2.60	-5.0	.045	-0.2658	-0.1308
371	5.00	.000	4.7	2.60	-5.0	.145	-0.2833	-0.2630
374	5.00	.000	-0.3	3.60	-5.0	.069	-0.3068	-0.3051
375	5.00	.000	-0.3	3.60	-5.0	.067	-0.3081	-0.2933
376	4.00	.000	-0.3	3.70	-5.0	.087	-0.2909	-0.2871
377	4.00	.000	4.7	3.60	5.0	.081	-0.2847	-0.2784
378	4.00	.000	4.8	3.60	5.0	.064	-0.2159	-0.2130
379	4.00	.000	-0.3	3.60	5.0	.084	-0.2853	-0.2698
380	3.00	.000	-5.3	3.60	5.0	.148	-0.2093	-0.2106
381	3.00	.000	-0.3	2.60	5.0	.117	-0.1811	-0.2013
382	5.00	.000	4.7	2.60	5.0	.076	-0.3142	-0.2770
383	3.00	.000	19.7	2.60	5.0	.028	-0.1655	-0.1442
385	5.00	.000	14.8	2.60	5.0	.153	0.0590	-0.2377 *
387	6.00	.000	4.8	2.60	5.0	.151	-0.5328	-0.3668 *
388	3.00	.000	-5.2	6.70	5.0	.310	-0.0798	-0.0420
389	5.00	.000	9.7	6.60	5.0	.040	-0.3241	-0.3446
395	4.00	.000	27.4	5.60	5.0	.176	-0.2408	-0.4159 *
396	4.00	.000	4.8	3.60	5.0	.081	-0.2733	-0.2783
397	4.00	.000	-0.2	3.60	10.0	.084	-0.2705	-0.2753
398	3.00	.000	-5.3	3.60	10.0	.146	-0.1922	-0.1937
399	4.00	.000	9.8	3.60	10.0	.087	-0.3687	-0.3588

TABLE A-18 (cont'd)

MEASURED AND FITTED PITCH MØMENT
BETA=20.DEG

RUN	CV	W	PHI	THETA	PSI	ZT	MEASURED	FITTED	*
400	5.00	.000	19.7	3.60	10.0	.019	-0.4737	-0.3668	*
401	4.00	.000	14.8	3.60	10.0	.163	-0.2664	-0.2952	
402	3.00	.000	14.7	6.60	10.0	.223	-0.4636	-0.4348	
403	3.00	.000	4.7	6.60	10.0	.152	-0.5929	-0.5250	*
404	5.00	.000	-0.3	6.60	10.0	.091	-0.8299	-0.6958	
405	2.00	.000	-5.3	6.60	10.0	.120	-0.2098	-0.1598	
406	4.00	.000	27.3	6.60	10.0	-.027	-0.3044	-0.3230	
407	3.00	.000	27.2	6.60	10.0	-.025	-0.1822	-0.1548	
408	2.00	.000	19.7	4.60	10.0	.038	-0.1305	-0.1006	
409	4.00	.000	9.7	2.60	10.0	.063	-0.1935	-0.2147	
410	3.00	.000	27.3	5.60	10.0	-.016	-0.2656	-0.2931	
411	3.00	.000	-5.2	5.60	10.0	.211	-0.2567	-0.2890	
412	3.00	.000	-5.3	5.60	10.0	.212	-0.2524	-0.2861	*
413	5.00	.000	-5.2	5.50	15.0	.089	-0.7890	-0.6413	
414	3.00	.000	-0.3	5.60	15.0	.201	-0.3158	-0.3695	
415	5.00	.000	19.7	5.50	15.0	.028	-0.8089	-0.7595	*
417	5.00	.000	-0.3	5.50	15.0	.057	-0.3302	-0.4872	*
419	6.00	.000	27.2	3.60	15.0	-.048	-0.1797	-0.2948	
420	4.00	.000	14.8	2.60	15.0	.056	-0.2638	-0.2740	
421	3.00	.000	4.8	2.60	15.0	.109	-0.1851	-0.1995	
422	3.00	.000	9.8	2.60	15.0	.152	-0.2176	-0.1588	
423	4.00	.000	14.8	2.60	15.0	.130	-0.2691	-0.3117	
424	6.00	.000	4.8	2.60	15.0	.125	-0.7605	-0.7274	*
427	5.00	.000	14.8	4.50	15.0	.077	-0.9228	-0.7838	
428	4.00	.000	4.8	4.60	15.0	.215	-0.2833	-0.3041	*
429	4.00	.000	-0.2	4.70	15.0	.290	0.4770	0.2603	
430	6.00	.000	-5.2	4.60	15.0	.080	-0.8541	-0.8427	
431	3.00	.000	14.8	4.60	15.0	.135	-0.4272	-0.3994	*
432	5.00	.000	14.8	4.60	15.0	.033	-0.2933	-0.5288	
433	3.00	.000	14.7	4.60	15.0	.056	-0.2345	-0.2742	
434	4.00	.000	-0.3	4.60	15.0	.063	-0.1950	-0.2512	
435	2.00	.000	4.7	6.70	15.0	.123	-0.2169	-0.2254	*
436	6.00	.000	9.7	6.70	15.0	.041	-0.3615	-0.9171	
437	3.00	.000	27.2	6.60	15.0	.001	-0.4360	-0.4467	
438	4.00	.000	-5.2	6.60	15.0	.185	-0.6305	-0.5993	
439	4.00	.000	-0.3	6.60	20.0	.051	-0.2264	-0.2129	
440	3.00	.000	4.7	5.60	20.0	.075	-0.1825	-0.2368	*
443	6.00	.000	27.2	5.50	20.0	-.013	-1.4481	-1.2968	
445	2.00	.000	27.3	4.60	20.0	.138	-0.1144	-0.1114	
446	4.00	.000	27.2	4.60	20.0	-.025	-0.4240	-0.4546	
447	2.00	.000	19.8	4.60	20.0	.112	-0.2229	-0.2139	
448	3.00	.000	4.7	4.60	20.0	.115	-0.3603	-0.3231	
449	3.00	.000	9.7	4.60	20.0	.065	-0.1655	-0.2349	
450	4.00	.000	-0.3	3.60	20.0	.085	-0.2977	-0.2876	
451	3.00	.000	19.7	3.60	20.0	.057	-0.3283	-0.3109	
453	6.00	.000	9.8	3.60	20.0	.119	-1.1551	-1.1710	
454	4.00	.000	9.8	3.60	20.0	.190	-0.2876	-0.3064	*
455	6.00	.000	19.7	2.60	20.0	.032	-0.7097	-0.8218	
456	4.00	.000	14.8	2.60	20.0	.072	-0.3487	-0.3407	
457	4.00	.000	19.8	1.60	20.0	.014	-0.1598	-0.1447	

TABLE A-18 (cont'd)

MEASURED AND FITTED PITCH MØMENT
BETA=20.DEG

RUN	CV	W	PHI	THETA	PSI	ZT	MEASURED	FITTED
459	4.00	.000	4.8	3.60	5.0	.077	-0.2832	-0.2667
211	2.07	.052	0.0	3.00	0.0	.106	-0.0992	-0.1385
212	2.96	.074	0.0	3.00	0.0	.079	-0.1521	-0.1554
213	3.92	.098	0.0	3.00	0.0	.070	-0.2333	-0.1944
214	5.00	.125	0.0	3.00	0.0	.056	-0.2895	-0.2281
215	5.96	.149	0.0	3.00	0.0	.047	-0.3853	-0.3130
216	2.94	.074	0.0	3.00	0.0	.069	-0.1272	-0.1261
217	3.01	.075	0.0	3.00	0.0	.106	-0.2064	-0.2059
218	3.02	.075	0.0	3.00	0.0	.146	-0.1713	-0.1927
219	3.97	.099	0.0	3.00	0.0	.122	-0.3405	-0.2848
220	4.00	.100	0.0	3.00	0.0	.147	-0.1936	-0.2554
221	5.00	.125	0.0	3.00	0.0	.120	-0.5343	-0.3992*
222	4.95	.124	0.0	3.00	0.0	.146	-0.2826	-0.3492
223	5.96	.149	0.0	3.00	0.0	.116	-0.8505	-0.5667*
224	3.00	.075	5.0	3.00	0.0	.074	-0.1558	-0.1458
225	2.97	.074	-5.0	3.00	0.0	.074	-0.1524	-0.1471
226	2.99	.075	-10.0	3.00	0.0	.069	-0.1751	-0.1466
227	2.99	.075	-15.0	3.00	0.0	.060	-0.2245	-0.1525
228	2.97	.074	-20.0	3.00	0.0	.048	-0.1454	-0.1760
229	2.95	.074	-27.5	3.00	0.0	.029	-0.1360	-0.2942*
230	2.98	.074	0.0	3.00	5.0	.079	-0.1128	-0.1125
231	2.98	.074	0.0	3.00	-5.0	.078	-0.1854	-0.1944
232	2.94	.073	0.0	3.00	-10.0	.079	-0.2218	-0.2213
233	3.02	.075	0.0	3.00	-15.0	.078	-0.2764	-0.2555
234	3.01	.075	0.0	3.00	-20.0	.088	-0.3136	-0.2939
235	2.98	.075	0.0	2.00	0.0	.088	-0.1174	-0.1863*
236	3.00	.075	0.0	4.00	0.0	.078	-0.1953	-0.1788
237	3.01	.075	0.0	5.00	0.0	.081	-0.2612	-0.2261
238	2.97	.074	0.0	6.00	0.0	.065	-0.2192	-0.1437
239	4.90	.123	5.0	2.00	0.0	.123	-0.1430	-0.3250*
240	4.00	.100	-5.0	3.00	0.0	.125	-0.2790	-0.2769
241	5.99	.150	-15.0	5.00	-10.0	.014	-0.7777	-0.9051*
242	5.99	.150	-27.5	6.00	-5.0	-.038	-0.9335	-0.7926*
243	3.97	.099	-27.5	6.00	-20.0	-.046	-0.6932	-0.6580
244	2.99	.075	-5.0	3.00	-5.0	.077	-0.1968	-0.2058
245	4.91	.123	5.0	3.00	-20.0	.056	-0.6897	-0.7863
246	1.74	.044	-15.0	6.00	0.0	.155	-0.1504	-0.1846
247	3.90	.098	-10.0	2.00	-20.0	.111	-0.7443	-0.5999*
248	4.96	.124	5.0	2.00	-5.0	.059	-0.3546	-0.3696
250	3.99	.100	-5.0	6.00	-20.0	.058	-0.5798	-0.6171
252	6.05	.151	-10.0	3.00	5.0	.105	-0.1958	-0.3756*
254	3.98	.099	-20.0	4.00	-5.0	.104	-0.4174	-0.5568*
255	2.99	.075	-10.0	3.00	-10.0	.136	-0.2646	-0.2927
256	2.97	.074	-5.0	3.00	-5.0	.079	-0.1935	-0.2079
259	5.02	.125	-20.0	4.00	5.0	.135	0.0194	-0.3304*
261	3.00	.075	-5.0	2.00	-10.0	.067	-0.1772	-0.2317
262	4.01	.100	-5.0	6.00	-15.0	.059	-0.5368	-0.5543
263	2.10	.053	-15.0	2.00	-20.0	.055	-0.1824	-0.1922
264	6.06	.152	5.0	3.00	-20.0	.052	-1.0941	-1.5473*
265	6.09	.152	-15.0	2.00	-15.0	.027	-0.9915	-1.0961

TABLE A-18 (cont'd)

MEASURED AND FITTED PITCH MOMENT
BETA=20.DEG

RUN	CV	W	PHI	THETA	PSI	ZT	MEASURED	FITTED
266	4.00	.100	-10.0	5.00	-20.0	.086	-1.0076	-0.8793*
267	4.93	.123	-15.0	2.00	-20.0	.063	-1.0194	-0.9627
268	2.98	.074	-5.0	3.00	-5.0	.078	-0.1852	-0.2062
269	2.03	.051	-15.0	4.00	-15.0	.069	-0.2069	-0.1873*
270	5.97	.149	-5.0	5.00	5.0	.095	-1.5204	-0.6728*
271	4.95	.124	-10.0	2.00	-10.0	.056	-0.2832	-0.5297
272	5.93	.148	0.0	3.00	-5.0	.067	-0.6657	-0.6588
273	5.00	.125	-5.0	2.00	5.0	.069	-0.1696	-0.1025*
274	5.95	.149	-5.0	3.00	0.0	.099	-0.7600	-0.5435
275	4.97	.124	-20.0	5.00	5.0	.040	-0.4955	-0.4697*
276	5.98	.150	-25.0	5.00	-5.0	.031	-1.3758	-1.2675*
278	5.62	.140	5.0	6.00	-15.0	.104	-1.7829	-1.4121
279	2.75	.069	-5.0	3.00	-5.0	.093	-0.1686	-0.2136
280	3.69	.092	-15.0	5.00	5.0	.021	-0.0806	-0.0356
282	4.09	.102	-20.0	4.00	-10.0	.083	-0.7326	-0.7244*
283	4.92	.123	-10.0	2.00	-15.0	.066	-0.5640	-0.7461
284	2.06	.052	-20.0	3.00	5.0	.062	-0.0596	-0.0513*
285	4.84	.121	-25.0	5.00	-15.0	.025	-1.4676	-1.2803
312	2.26	.085	0.0	3.00	0.0	.095	-0.1188	-0.1313
313	3.20	.120	0.0	3.00	0.0	.084	-0.1719	-0.1800
314	4.29	.161	0.0	3.00	0.0	.055	-0.1680	-0.1788
315	5.24	.196	0.0	3.00	0.0	.046	-0.2047	-0.2735*
316	6.14	.230	0.0	3.00	0.0	.037	-0.2170	-0.4334
317	3.12	.117	0.0	3.00	0.0	.063	-0.1119	-0.1109
318	3.01	.113	0.0	3.00	0.0	.125	-0.2034	-0.2053
320	4.16	.156	0.0	3.00	0.0	.125	-0.3788	-0.3226
321	4.05	.152	0.0	3.00	0.0	.125	-0.3561	-0.3091
324	4.99	.187	0.0	3.00	0.0	.129	-0.5104	-0.4569
325	4.99	.187	0.0	3.00	0.0	.152	-0.3294	-0.4020
326	3.01	.113	5.0	3.00	0.0	.078	-0.1461	-0.1533
327	3.01	.113	-5.0	3.00	0.0	.081	-0.1240	-0.1625
328	2.99	.112	-10.0	3.00	0.0	.071	-0.1600	-0.1464
329	3.01	.113	-15.0	3.00	0.0	.051	-0.1635	-0.1284
330	3.02	.113	-20.0	3.00	0.0	.044	-0.1553	-0.1724*
331	2.99	.112	-27.5	3.00	0.0	.021	-0.1420	-0.2958*
332	2.95	.111	0.0	3.00	5.0	.041	-0.0029	0.0551
333	3.05	.114	0.0	3.00	-5.0	.092	-0.2250	-0.2481
334	2.81	.106	0.0	3.00	-10.0	.097	-0.2572	-0.2748
335	2.81	.105	0.0	3.00	-15.0	.098	-0.3077	-0.3131
336	2.83	.106	0.0	3.00	-20.0	.068	-0.2803	-0.2579*
337	2.87	.107	0.0	2.00	0.0	.105	-0.1128	-0.1872
338	2.90	.109	0.0	4.00	0.0	.078	-0.1625	-0.1647
341	3.06	.115	0.0	5.00	0.0	.081	-0.2377	-0.2299*
346	1.90	.071	-20.0	4.00	5.0	.136	-0.0824	0.0436
347	4.06	.152	-5.0	3.00	-5.0	.086	-0.4083	-0.4108
348	4.97	.186	5.0	4.00	-20.0	.086	-1.2403	-1.3009*
349	4.99	.187	-15.0	4.00	5.0	.175	0.1987	-0.1203
350	3.01	.113	-5.0	3.00	-5.0	.087	-0.2179	-0.2460
351	4.05	.152	-15.0	6.00	0.0	.019	-0.2673	-0.2492*
352	5.94	.223	0.0	2.00	-5.0	.040	-0.4115	-0.6746

TABLE A-18 (cont'd)

MEASURED AND FITTED PITCH MOMENT
BETA=20.DEG

RUN	CV	W	PHI	THETA	PSI	ZT	MEASURED	FITTED
353	4.99	.187	-20.0	5.00	0.0	.072	-0.7129	-0.8613*
355	5.00	.187	-20.0	5.00	0.0	.079	-0.6554	-0.8792*
359	4.00	.150	-25.0	5.00	5.0	.098	-0.1948	-0.5226*
360	4.00	.150	0.0	4.00	5.0	.209	0.2053	-0.0266*
361	5.99	.225	-25.0	5.00	-20.0	-.011	-2.4763	-2.2604*
362	4.01	.150	-15.0	6.00	0.0	.016	-0.1945	-0.2111
363	4.04	.152	5.0	4.00	-10.0	.192	-0.1711	-0.4975*
364	4.03	.151	-5.0	3.00	0.0	.129	-0.2928	-0.2901
365	2.97	.111	-5.0	3.00	-5.0	.091	-0.2162	-0.2472
366	4.97	.187	-10.0	6.00	-20.0	.055	-1.1119	-1.5075*
370	5.52	.207	-5.0	3.00	-20.0	.090	-1.7805	-1.8520
371	5.02	.188	5.0	3.00	0.0	.069	-0.3529	-0.3928
372	2.99	.112	5.0	2.00	-20.0	.094	-0.3640	-0.3784
373	1.97	.074	-20.0	6.00	-5.0	.187	-0.2213	-0.2081
374	2.92	.109	-20.0	6.00	-5.0	.105	-0.4734	-0.6085*
376	5.00	.187	-5.0	2.00	0.0	.071	-0.2688	-0.2988
378	4.02	.151	0.0	6.00	-20.0	.126	-1.2185	-1.0320*
379	6.01	.225	-20.0	2.00	0.0	.004	-0.3748	-0.2481*
380	4.97	.187	-20.0	2.00	-5.0	.082	-0.2200	-0.5822*
381	2.99	.112	-5.0	3.00	-5.0	.082	-0.2135	-0.2309
384	5.95	.223	-10.0	3.00	5.0	.094	-0.2436	-0.3895*
386	4.85	.182	-15.0	3.00	-5.0	.092	-0.6041	-0.6601
387	5.12	.192	-5.0	3.00	-5.0	.114	-0.7709	-0.7261
390	6.10	.229	5.0	5.00	-15.0	.089	-2.0056	-2.0142
395	4.23	.158	-10.0	6.00	-5.0	.038	-0.4074	-0.4454*
396	3.19	.119	-27.5	4.00	0.0	.128	-0.0719	-0.1993
397	3.15	.118	-5.0	4.00	-15.0	.097	-0.4595	-0.4669
398	4.10	.154	-5.0	5.00	5.0	.137	-0.5012	-0.4227
399	3.07	.115	-5.0	3.00	-5.0	.061	-0.1710	-0.1759
402	6.06	.227	-10.0	2.00	5.0	.040	-0.0739	-0.0788
403	3.11	.117	-10.0	5.00	-10.0	.151	-0.6332	-0.5697
404	2.98	.112	-15.0	6.00	-10.0	.135	-0.6906	-0.6877
405	4.04	.151	-20.0	5.00	-10.0	.090	-0.9857	-0.9883
702	2.99	.224	0.0	3.00	0.0	.093	-0.1467	-0.1476
703	1.98	.149	0.0	3.00	0.0	.123	-0.0921	-0.0801
704	2.49	.187	0.0	3.00	0.0	.103	-0.1124	-0.1055
705	3.01	.226	0.0	3.00	0.0	.071	-0.0946	-0.0981
706	2.99	.224	0.0	3.00	0.0	.115	-0.1923	-0.1714
707	2.99	.224	0.0	3.00	0.0	.176	-0.0317	-0.0898*
709	3.01	.226	5.0	3.00	0.0	.085	-0.1500	-0.1356
710	3.01	.226	-5.0	3.00	0.0	.091	-0.1520	-0.1483
711	3.01	.226	-10.0	3.00	0.0	.076	-0.1654	-0.1291
712	3.00	.225	-15.0	3.00	0.0	.057	-0.1571	-0.1170
713	3.00	.225	-20.0	3.00	0.0	.028	-0.1385	-0.1144
714	3.00	.225	-27.5	3.00	0.0	.006	-0.1405	-0.2748*
715	3.01	.226	0.0	3.00	5.0	.088	-0.0034	-0.0087*
716	3.00	.225	0.0	3.00	-5.0	.099	-0.2652	-0.2865
717	3.01	.225	0.0	3.00	-10.0	.099	-0.3880	-0.4063
718	3.01	.225	0.0	3.00	-15.0	.103	-0.5050	-0.5203
719	3.01	.226	0.0	3.00	-20.0	.104	-0.6063	-0.6181

TABLE A-18 (cont'd)

MEASURED AND FITTED PITCH MØMENT
BETA=20.DEG

RUN	CV	W	PHI	THETA	PSI	ZT	MEASURED	FITTED
720	3.01	.226	0.0	2.00	0.0	.090	-0.1033	-0.1426
721	3.02	.226	0.0	4.00	0.0	.100	-0.1988	-0.2125
722	3.00	.225	0.0	5.00	0.0	.094	-0.2291	-0.2518
723	3.01	.226	0.0	6.00	0.0	.089	-0.2572	-0.2710
724	2.53	.190	0.0	6.00	-20.0	.084	-0.5912	-0.2916 *
726	2.53	.189	5.0	8.00	-5.0	.256	-0.4159	-0.4165
728	2.99	.224	-5.0	3.00	-5.0	.165	-0.2403	-0.2517
730	2.99	.224	-5.0	6.00	5.0	.267	0.0070	-0.0399 *
731	1.95	.147	0.0	5.00	-10.0	.249	-0.1662	-0.1801
732	2.49	.187	-27.5	3.00	-10.0	-.010	-0.3327	-0.3884
733	3.00	.225	-5.0	3.00	-5.0	.100	-0.2743	-0.2976
735	1.97	.148	-27.5	3.00	-10.0	.079	-0.1730	-0.1875
736	3.00	.225	-20.0	3.00	5.0	.094	0.0169	0.0302
737	3.00	.225	-27.5	6.00	-10.0	.141	-0.7554	-0.9976 *
738	1.99	.149	-10.0	3.00	-15.0	.137	-0.2827	-0.2257
741	2.48	.186	0.0	3.00	-5.0	.132	-0.2102	-0.2036
743	2.53	.190	5.0	8.00	-10.0	.273	-0.4365	-0.4476
744	2.04	.153	-10.0	3.00	-10.0	.092	-0.1966	-0.1841
746	3.01	.226	-5.0	5.00	-20.0	.242	-0.4124	-0.7366 *
747	3.01	.226	-5.0	3.00	-5.0	.086	-0.1740	-0.2759 *
749	3.07	.230	-10.0	6.00	-5.0	.166	-0.6895	-0.6803
750	2.57	.193	5.0	5.00	0.0	.129	-0.2234	-0.2099
751	2.57	.193	-10.0	6.00	0.0	.067	-0.1791	-0.1920
752	2.07	.155	-27.5	3.00	-20.0	-.018	-0.3367	-0.3991
754	2.00	.150	5.0	6.00	0.0	.257	-0.1395	-0.1455
755	2.14	.160	-15.0	3.00	5.0	.120	0.0162	0.0700 *
757	2.51	.188	0.0	8.00	-20.0	.339	-0.3583	-0.6419 *
758	2.51	.189	-15.0	6.00	-15.0	.062	-0.4857	-0.5176
759	2.51	.188	5.0	6.00	-10.0	.280	-0.1810	-0.2221
760	3.00	.225	-5.0	3.00	-5.0	.094	-0.2777	-0.2878
761	3.00	.225	-15.0	5.00	0.0	.257	0.0057	0.1511 *
763	2.51	.188	-20.0	7.00	0.0	.301	-0.1738	0.1187 *
764	2.99	.224	0.0	5.00	-5.0	.103	-0.3757	-0.3798
765	2.99	.224	-5.0	5.00	-15.0	.183	-0.7271	-0.7264
766	2.02	.151	0.0	5.00	5.0	.372	0.4033	0.4192
769	2.51	.188	-10.0	8.00	-15.0	.234	-0.8239	-0.8548
771	3.00	.225	-10.0	2.00	5.0	.107	0.0735	0.0740
772	3.00	.225	-25.0	5.00	-10.0	.151	-0.5956	-0.6948
773	2.98	.224	-5.0	3.00	-5.0	.103	-0.2708	-0.2951
774	2.49	.186	-10.0	4.00	0.0	.251	0.1088	0.2149 *
775	2.98	.224	-10.0	6.00	-5.0	.176	-0.6459	-0.6397
777	2.49	.187	5.0	8.00	-10.0	.330	-0.3009	-0.3314
780	2.97	.223	-25.0	6.00	-5.0	.212	-0.3900	-0.3809
781	2.48	.186	-25.0	5.00	-20.0	.104	-0.7515	-0.8094

MEAN ERRØR= 0.0122
STANDARD DEVIATIØN= 0.1056

TABLE A-19

MEASURED AND FITTED SIDE FORCE
BETA=10.DEG

RUN	CV	W	PHI	THETA	PSI	ZT	MEASURED	FITTED
3	4.00	.000	2.1	2.60	0.0	.043	0.0085	0.0090
5	4.00	.000	4.6	2.50	0.0	.035	0.0082	0.0103
6	4.00	.000	7.2	2.60	0.0	.139	0.0864	0.0753
7	4.00	.000	9.7	2.50	0.0	.020	0.0182	0.0213
8	4.00	.000	12.2	2.40	0.0	.011	0.0222*	0.0327
1	4.00	.000	4.7	2.50	5.0	.028	0.0242	0.0237
2	4.00	.000	0.1	2.60	0.0	.048	0.0095	0.0068
9	4.00	.000	0.0	2.60	-5.0	.046	-0.0101*	-0.0166
10	4.00	.000	0.0	2.60	5.0	.046	0.0271	0.0302
11	4.00	.000	0.0	2.60	10.0	.048	0.0468	0.0529
12	4.00	.000	0.1	2.60	15.0	.047	0.0663	0.0681
13	4.00	.000	0.1	2.60	20.0	.046	0.0841	0.0705
14	4.00	.000	0.1	1.60	0.0	.062	0.0102	0.0068
15	4.00	.000	0.0	3.70	0.0	.039	0.0084	0.0067
16	4.00	.000	0.0	4.70	0.0	.036	0.0078	0.0067
17	4.00	.000	0.0	5.70	0.0	.032	0.0078	0.0067
18	4.00	.000	0.0	2.60	0.0	.038	0.0073	0.0067
19	4.00	.000	0.1	2.60	0.0	.061	0.0099	0.0069
21	4.00	.000	0.0	1.60	0.0	.048	0.0082	0.0067
23	4.00	.000	0.0	1.60	0.0	.049	0.0076	0.0067
24	4.00	.000	5.1	2.80	0.0	.039	0.0150	0.0147
25	4.00	.000	0.1	2.70	0.0	.101	0.0133*	0.0072
26	4.00	.000	0.1	2.70	0.0	.159	0.0124	0.0077
27	4.00	.000	0.1	2.70	0.0	.170	0.0130*	0.0078
29	2.00	.000	0.0	2.60	0.0	.083	0.0063	0.0067
30	3.00	.000	0.0	2.60	0.0	.057	0.0069	0.0067
31	5.00	.000	0.0	2.60	0.0	.040	0.0102	0.0067
32	6.00	.000	0.0	2.60	0.0	.035	0.0124*	0.0067
34	5.00	.000	2.4	2.40	-5.0	.076	-0.0350*	-0.0667
36	2.00	.000	7.4	5.50	-5.0	.287	-0.0576*	-0.0987
37	3.00	.000	5.0	4.50	20.0	.058	0.0739	0.0745
40	4.00	.000	12.4	4.50	20.0	.007	0.0604*	0.1780
41	3.00	.000	5.0	4.50	20.0	.031	0.0243*	0.0503
42	2.00	.000	10.0	4.50	20.0	.079	0.0734	0.0827
43	2.00	.000	10.0	4.50	20.0	.056	0.0462*	0.0736
44	5.00	.000	7.4	4.50	20.0	.019	0.0658	0.0633
45	2.00	.000	12.4	4.50	20.0	.124	0.1688	0.1754
46	3.00	.000	10.0	3.50	20.0	.110	0.3068	0.2782
47	4.00	.000	10.0	2.50	20.0	.042	0.1281	0.1688
48	4.00	.000	0.1	6.50	20.0	.111	0.2391	0.2497
49	6.00	.000	9.9	2.40	20.0	.034	0.2067	0.1790
50	4.00	.000	4.9	5.60	20.0	.243	1.3425	1.3152
51	3.00	.000	0.0	5.50	20.0	.059	0.0656	0.0425
52	4.00	.000	7.5	2.50	20.0	.056	0.1642	0.1663
53	4.00	.000	2.4	3.50	20.0	.112	0.3105	0.3409
54	3.00	.000	2.5	5.50	20.0	.033	0.0314	0.0342
55	5.00	.000	0.1	6.50	10.0	.045	0.0635	0.0636
56	2.00	.000	10.0	4.60	10.0	.030	0.0161*	0.0533
57	4.00	.000	5.0	2.50	10.0	.036	0.0275*	0.0507
58	3.00	.000	12.5	6.50	10.0	-.005	0.0160*	0.1274

TABLE A-19 (cont'd)

MEASURED AND FITTED SIDE FORCE
BETA=10.DEG

RUN	CV	W	PHI	THETA	PSI	ZT	MEASURED	FITTED
59	4.00	.000	2.5	3.60	5.0	.040	0.0146*	0.0305
60	4.00	.000	2.5	3.60	5.0	.029	0.0099*	0.0228
61	4.00	.000	5.1	3.50	5.0	.043	0.0237*	0.0449
62	3.00	.000	0.0	2.50	5.0	.054	0.0173	0.0233
63	5.00	.000	2.5	2.50	5.0	.035	0.0209*	0.0317
64	3.00	.000	9.9	2.60	5.0	.013	0.0083*	0.0373
65	4.00	.000	5.0	2.60	5.0	.039	0.0107*	0.0365
66	5.00	.000	5.0	6.60	5.0	.022	0.0212*	0.0358
67	3.00	.000	9.9	6.60	5.0	.020	0.0341*	0.0629
68	6.00	.000	12.4	5.70	5.0	-.006	0.0378	0.0469
69	3.00	.000	-5.1	6.60	5.0	.240	0.0198*	0.1442
70	6.00	.000	-5.1	5.70	5.0	.016	0.0253*	0.0093
71	6.00	.000	7.4	5.60	5.0	.012	0.0191*	0.0289
72	4.00	.000	12.4	5.60	5.0	.102	0.2321	0.2250
73	2.00	.000	0.0	5.60	5.0	.060	0.0137	0.0098
74	4.00	.000	2.4	3.60	5.0	.041	0.0227	0.0309
76	5.00	.000	2.4	5.60	0.0	.026	0.0125	0.0123
77	2.00	.000	4.9	5.70	0.0	.329	0.0392	0.0405
78	6.00	.000	7.5	5.70	0.0	.015	0.0004*	0.0185
79	3.00	.000	12.4	5.60	0.0	.112	0.1046	0.1013
80	3.00	.000	12.4	5.60	0.0	.247	0.1880	0.1762
81	4.00	.000	12.4	4.60	0.0	.117	0.1775	0.1410
82	4.00	.000	4.9	6.60	0.0	.099	0.0898*	0.0386
83	3.00	.000	-5.1	6.60	0.0	.049	0.0041*	-0.0064
84	3.00	.000	2.4	2.60	0.0	.044	0.0024*	0.0062
85	4.00	.000	7.4	2.60	-5.0	.026	-0.0125*	-0.0062
87	2.00	.000	4.9	2.60	-5.0	.135	-0.0184*	-0.0290
88	4.00	.000	4.9	2.60	-5.0	.061	-0.0215	-0.0208
89	2.00	.000	7.4	5.70	-5.0	.285	-0.0551*	-0.0964
90	6.00	.000	7.5	6.70	-5.0	.014	-0.0277*	0.0005
91	2.00	.000	0.0	4.60	-5.0	.119	-0.0042*	-0.0108
92	5.00	.000	0.0	3.60	-5.0	.037	-0.0181	-0.0169
93	6.00	.000	9.9	3.50	-5.0	.110	-0.0497*	-0.1112
94	6.00	.000	9.9	4.60	-5.0	.078	0.0144*	-0.0534
95	6.00	.000	10.0	5.60	-5.0	.002	-0.0177*	0.0056
97	4.00	.000	9.9	5.60	-5.0	.037	-0.0099*	0.0204
98	5.00	.000	9.9	5.50	-5.0	.097	0.0614*	-0.0261
99	3.00	.000	0.1	6.60	-5.0	.142	-0.0195*	-0.0505
100	4.00	.000	4.9	6.60	-5.0	.034	-0.0080*	0.0037
101	4.00	.000	2.4	3.50	5.0	.039	0.0171*	0.0296
102	6.00	.000	9.9	2.50	0.0	.105	0.1410	0.1204
103	3.00	.000	-5.1	2.50	10.0	.122	0.1264	0.1170
105	5.00	.000	10.0	3.50	10.0	.013	0.0448*	0.0740
106	4.00	.000	5.0	3.50	10.0	.045	0.0524	0.0689
107	3.00	.000	7.4	6.50	10.0	.158	0.2103	0.2152
108	4.00	.000	12.5	6.60	10.0	-.006	0.0349*	0.1294
109	2.00	.000	-5.1	6.60	10.0	.057	0.0157	0.0135
110	3.00	.000	2.4	6.50	10.0	.077	0.0657	0.0470
111	3.00	.000	-5.1	5.60	10.0	.135	0.0796	0.0974
112	3.00	.000	12.5	5.60	10.0	.006	0.0236*	0.1236

TABLE A-19 (cont'd)

MEASURED AND FITTED SIDE FORCE
BETA=10.DEG

RUN	CV	W	PHI	THETA	PSI	ZT	MEASURED	FITTED
113	4.00	.000	2.4	3.60	5.0	.038	0.0209	0.0288
114	4.00	.000	0.0	3.50	15.0	.042	0.0524	0.0525
115	4.00	.000	12.5	3.60	15.0	.001	0.0400*	0.1356
116	3.00	.000	7.4	2.60	15.0	.139	0.2775	0.2911
117	4.00	.000	7.4	2.50	15.0	.030	0.0491*	0.0758
118	3.00	.000	5.0	2.50	15.0	.067	0.0796	0.0826
119	3.00	.000	2.4	2.50	15.0	.057	0.0475	0.0564
120	6.00	.000	2.4	2.50	15.0	.069	0.2704	0.2890
121	3.00	.000	0.0	2.60	15.0	.172	0.3721	0.3446
126	6.00	.000	4.9	2.50	20.0	.065	0.3229	0.3297
127	4.00	.000	5.0	2.60	20.0	.137	0.5450	0.5506
128	6.00	.000	12.5	5.50	20.0	.022	0.2217	0.2221
129	2.00	.000	12.5	6.60	0.0	.057	0.0231*	0.0497
130	5.00	.000	6.6	****	7.5	-.181	0.0033*	-0.1856
131	6.00	.000	-5.0	6.70	0.0	.022	-0.0015	-0.0019
132	3.00	.000	9.9	3.60	0.0	.148	0.0752	0.0826
133	4.00	.000	7.4	3.60	5.0	.145	0.1929	0.2369
134	3.00	.000	9.9	3.70	5.0	.224	0.2241*	0.3234
135	4.00	.000	2.4	3.60	5.0	.040	0.0158*	0.0301
138	4.00	.000	-5.0	5.60	20.0	.221	1.0989*	0.9670
139	4.00	.000	-5.1	3.60	5.0	.044	0.0186	0.0186
1	1.97	.049	0.0	3.00	0.0	.057	0.2562	0.2636
2	1.98	.050	0.0	3.00	0.0	.058	0.2610	0.2662
3	3.15	.079	0.0	3.00	0.0	.029	0.6588	0.6581
4	4.01	.100	0.0	3.00	0.0	.022	1.0600	1.0576
6	5.30	.133	0.0	3.00	0.0	.033	1.8350	1.8497
8	6.00	.150	0.0	3.00	0.0	.032	2.3791	2.3773
10	3.01	.075	-2.5	3.00	0.0	.042	0.5943	0.5992
9	3.12	.078	5.0	3.00	0.0	.038	0.6447	0.6464
11	3.02	.076	-5.0	3.00	0.0	.037	0.7775*	0.6027
12	2.95	.074	-7.5	3.00	0.0	.033	0.5746	0.5703
13	2.98	.075	-10.0	3.00	0.0	.032	0.5741	0.5705
14	2.96	.074	-12.5	3.00	0.0	.026	0.5522	0.5445
15	2.95	.074	0.0	2.00	0.0	.064	0.5679	0.5731
16	2.99	.075	0.0	4.00	0.0	.047	0.5847	0.5895
19	2.72	.068	0.0	5.00	0.0	.041	0.4933	0.4912
20	2.68	.067	0.0	5.00	0.0	.041	0.4768	0.4770
21	3.14	.079	0.0	6.00	0.0	.033	0.6556	0.6553
22	2.01	.050	-7.5	6.00	0.0	.089	0.2440	0.2560
23	2.98	.074	0.0	3.00	0.0	.025	0.5919	0.5899
24	2.97	.074	0.0	3.00	0.0	.072	0.5843	0.5757
25	2.46	.062	0.0	3.00	0.0	.151	0.4027	0.3917
26	3.46	.087	0.0	3.00	0.0	.103	0.7997	0.7799
27	2.96	.074	0.0	3.00	0.0	.127	0.5782	0.5665
28	2.93	.073	0.0	3.00	0.0	.181	0.5709	0.5576
30	4.49	.112	0.0	3.00	0.0	.193	1.3192	1.3329
31	5.03	.126	0.0	3.00	0.0	.115	1.6998	1.6609
32	3.15	.079	0.0	3.00	-5.0	.055	0.6368	0.6290
34	3.07	.077	-2.5	3.00	-5.0	.054	0.6030	0.5976
35	5.82	.146	0.0	3.00	-5.0	.049	2.2071	2.1692

TABLE A-19 (cont'd)

MEASURED AND FITTED SIDE FØRCE
BETA=10.DEG

RUN	CV	W	PHI	THETA	PSI	ZT	MEASURED	FITTED
36	5.77	.144	-12.5	6.00	-5.0	.008	2.1530	2.1498
37	4.91	.123	5.0	2.00	-5.0	.040	1.5511	1.5413
38	2.87	.072	-10.0	4.00	-5.0	.157	0.3882	0.3599
39	5.96	.149	-12.5	5.00	-5.0	.045	2.1908	2.1885
40	3.00	.075	0.0	3.00	-10.0	.135	0.5497*	0.4288
41	6.02	.150	-7.5	5.00	-10.0	.025	2.2902	2.2821
42	2.95	.074	-2.5	2.00	-10.0	.057	0.5318	0.5286
43	5.21	.130	-5.0	2.00	-10.0	.022	1.7189	1.7250
46	3.09	.077	-5.0	2.00	-10.0	.092	0.5096	0.5133
47	3.14	.079	-2.5	3.00	-5.0	.036	0.6346	0.6378
48	3.09	.077	0.0	3.00	-15.0	.041	0.5655	0.5686
56	5.23	.131	-5.0	3.00	-15.0	.060	1.5033	1.4943
57	5.19	.130	-5.0	2.00	-15.0	.027	1.6242	1.6337
58	5.12	.128	-12.5	5.00	-15.0	.027	1.4597	1.4363
59	3.05	.076	0.0	3.00	-20.0	.048	0.5100	0.5217
60	4.17	.104	-12.5	6.00	-20.0	-.007	0.8708	0.8834
62	5.18	.129	5.0	3.00	-20.0	.022	1.5902	1.5855
65	4.10	.102	-2.5	6.00	-20.0	.033	0.9768	0.9741
66	6.15	.154	-10.0	5.00	-20.0	.004	2.2523	2.2566
67	2.11	.053	-7.5	2.00	-20.0	.046	0.2156	0.2474
69	4.05	.101	-5.0	5.00	-20.0	.047	0.8860	0.8874
70	3.01	.075	-7.5	2.00	-20.0	.076	0.3250*	0.4070
71	3.00	.075	0.0	3.00	5.0	.038	0.6041	0.6032
72	6.08	.152	-5.0	3.00	5.0	.057	2.5081	2.4889
74	5.05	.126	-10.0	3.00	5.0	.108	1.7411	1.7289
75	6.03	.151	-2.5	5.00	5.0	.047	2.4835	2.4510
76	5.05	.126	-2.5	2.00	5.0	.038	1.7194	1.6837
77	5.05	.126	-10.0	5.00	5.0	.031	1.6877	1.6768
78	4.02	.101	-7.5	5.00	5.0	.008	1.0803	1.0677
79	2.04	.051	-10.0	3.00	5.0	.016	0.2931	0.3018
80	5.33	.133	-2.5	3.00	0.0	.061	1.9165	1.8586
82	3.87	.097	-2.5	2.00	0.0	.099	0.9849	0.9634
83	3.02	.075	-2.5	3.00	-5.0	.038	0.5946	0.5883
418	1.85	.069	0.0	3.00	0.0	.060	0.3322	0.3438
419	2.96	.111	0.0	3.00	0.0	.044	0.8528	0.8601
420	3.95	.148	0.0	3.00	0.0	.033	1.5250	1.5264
421	5.02	.188	0.0	3.00	0.0	.025	2.4884	2.4782
422	6.09	.228	0.0	3.00	0.0	.022	3.6423	3.6609
423	3.86	.145	0.0	3.00	0.0	.023	1.4559	1.4628
424	3.91	.146	0.0	3.00	0.0	.045	1.4838	1.4916
425	3.96	.148	0.0	3.00	0.0	.067	1.5493	1.5275
426	4.03	.151	0.0	3.00	0.0	.117	1.5870	1.5812
427	4.01	.150	0.0	3.00	0.0	.158	1.5763	1.5718
428	3.99	.150	5.0	3.00	0.0	.027	1.5600	1.5693
429	4.02	.151	-2.5	3.00	0.0	.031	1.5786	1.5797
430	3.99	.150	-5.0	3.00	0.0	.027	1.5544	1.5616
431	4.01	.150	-7.5	3.00	0.0	.017	1.5650	1.5754
432	4.00	.150	-10.0	3.00	0.0	.011	1.5503	1.5666
433	4.01	.150	-12.5	3.00	0.0	.006	1.5456	1.5597
434	3.99	.150	-12.5	3.00	5.0	.007	1.5617	1.5673

TABLE A-19 (cont'd)

MEASURED AND FITTED SIDE FØRCE
BETA=10.DEG

RUN	CV	W	PHI	THETA	PSI	ZT	MEASURED	FITTED
435	4.00	.150	-12.5	3.00	-5.0	-.002	1.5386	1.5249
436	4.02	.151	-12.5	3.00	-10.0	-.004	1.5209	1.4881
438	3.97	.149	0.0	3.00	5.0	.032	1.5525	1.5469
440	4.01	.150	0.0	3.00	-5.0	.035	1.5439	1.5498
441	4.00	.150	0.0	3.00	-10.0	.036	1.4917	1.5034
443	3.98	.149	0.0	3.00	-15.0	.040	1.4231	1.4297
444	3.98	.149	0.0	3.00	-20.0	.035	1.3771	1.3824
445	3.98	.149	0.0	2.00	0.0	.036	1.5439	1.5538
446	3.98	.149	0.0	4.00	0.0	.032	1.5562	1.5571
448	4.02	.151	0.0	5.00	0.0	.025	1.5857	1.5960
449	4.03	.151	0.0	6.00	0.0	.024	1.5929	1.6130
451	1.81	.068	-10.0	4.00	5.0	.132	0.3358	0.3301
452	4.01	.150	-2.5	3.00	-5.0	.043	1.5401	1.5412
455	4.91	.184	5.0	4.00	-20.0	.131	1.2519*	1.5600
456	4.90	.184	-7.5	4.00	5.0	.099	2.3036*	2.4092
457	2.92	.109	-2.5	3.00	-5.0	.043	0.8104	0.8231
458	4.00	.150	-7.5	6.00	0.0	.010	1.5568	1.5718
459	5.96	.224	0.0	2.00	-5.0	.025	1.8315*	3.4688
460	5.01	.188	-10.0	5.00	0.0	.045	2.3901	2.4344
463	4.02	.151	-12.5	3.00	5.0	.110	1.5995	1.5652
465	5.97	.224	0.0	2.00	5.0	.090	3.5771	3.6344
466	5.97	.224	-12.5	5.00	-20.0	.011	3.0490	3.0481
467	4.00	.150	-7.5	6.00	0.0	.011	1.5807	1.5733
469	5.05	.189	5.0	4.00	-10.0	.083	2.2624	2.2962
470	3.01	.113	-2.5	3.00	0.0	.131	0.8553	0.8629
471	2.99	.112	-2.5	3.00	-5.0	.047	0.8531	0.8620
473	4.96	.186	-5.0	6.00	-20.0	.024	2.1864	2.1692
475	4.97	.186	-2.5	2.00	-20.0	.086	1.8166	1.8197
476	4.97	.186	5.0	3.00	0.0	.031	2.4257	2.4258
483	1.98	.074	-10.0	6.00	-5.0	.168	0.2859	0.2994
484	2.91	.109	-2.5	2.00	0.0	.089	0.8173	0.8244
485	3.01	.113	0.0	6.00	-20.0	.133	0.6064	0.6250
487	3.93	.148	-10.0	2.00	-5.0	.097	1.3241	1.3423
488	3.00	.113	-2.5	3.00	-5.0	.043	0.8658	0.8701
489	4.13	.155	-5.0	2.00	5.0	.112	1.7391	1.7299
490	6.08	.228	-5.0	2.00	5.0	.081	3.7408	3.7275
491	4.10	.154	-7.5	3.00	-5.0	.075	1.5079	1.5289
492	4.04	.152	0.0	3.00	0.0	.028	1.6040	1.6037
494	3.18	.119	-2.5	4.00	-5.0	.140	0.9106	0.8741
496	6.07	.228	5.0	5.00	-15.0	.074	3.2019	3.1986
499	6.05	.227	-10.0	5.00	-15.0	.001	3.4356	3.4328
500	4.08	.153	-5.0	6.00	-5.0	.015	1.6107	1.6263
502	3.09	.116	-12.5	4.00	0.0	.105	0.8229	0.8390
503	3.10	.116	-2.5	4.00	-15.0	.053	0.8475	0.8562
505	3.03	.114	-2.5	5.00	5.0	.161	0.8924	0.9556
506	3.02	.113	-2.5	3.00	-5.0	.041	0.8684	0.8804
507	3.01	.113	-5.0	2.00	5.0	.092	0.9052	0.9125
508	2.99	.112	-5.0	5.00	-10.0	.104	0.7436	0.7536
512	2.01	.075	-7.5	6.00	-10.0	.220	0.2251	0.2007
513	5.15	.193	-10.0	5.00	-10.0	.042	2.3818	2.4159

TABLE A-19 (cont'd)

MEASURED AND FITTED SIDE FØRCE
BETA=10.DEG

RUN	CV	W	PHI	THETA	PSI	ZT	MEASURED	FITTED
514	5.10	.191	-12.5	2.00	-10.0	-.016	2.4699	2.5077
795	3.00	.225	0.0	3.00	0.0	.055	1.7423	1.7391
796	2.99	.224	5.0	3.00	0.0	.047	1.7446	1.7421
797	3.01	.226	-2.5	3.00	0.0	.056	1.7344	1.7492
798	3.00	.225	-5.0	3.00	0.0	.051	1.7388	1.7401
799	3.01	.226	-7.5	3.00	0.0	.046	1.7467	1.7521
800	3.00	.225	-10.0	3.00	0.0	.039	1.7282	1.7331
801	3.00	.225	-12.5	3.00	0.0	.033	1.7217	1.7201
802	2.99	.224	0.0	3.00	5.0	.054	1.7475	1.7349
803	2.99	.224	0.0	3.00	-5.0	.068	1.7098	1.6974
804	2.98	.223	0.0	3.00	-10.0	.072	1.6521	1.6339
805	2.99	.224	0.0	3.00	-15.0	.075	1.6036	1.5829
806	3.00	.225	0.0	3.00	-20.0	.069	1.5444	1.5282
807	3.00	.225	0.0	2.00	0.0	.067	1.7389	1.7410
808	2.97	.223	0.0	4.00	0.0	.058	1.7166	1.7072
809	3.00	.225	0.0	5.00	0.0	.053	1.7471	1.7402
810	2.99	.224	0.0	6.00	0.0	.056	1.7313	1.7290
811	3.00	.225	0.0	3.00	0.0	.051	1.7427	1.7441
812	3.00	.225	0.0	3.00	0.0	.082	1.7355	1.7306
813	3.00	.225	0.0	3.00	0.0	.130	1.7293	1.7160
815	2.01	.151	0.0	3.00	0.0	.104	0.7746	0.7803
816	2.51	.188	-2.5	3.00	0.0	.069	1.2151	1.2229
817	3.01	.226	0.0	6.00	-20.0	.066	1.5786	1.5810
818	3.02	.226	5.0	6.00	-5.0	.175	1.6827 *	1.6797
819	3.02	.226	-2.5	6.00	5.0	.211	1.7457	1.8770
820	2.03	.152	0.0	4.00	-10.0	.205	0.6277	0.6144
821	3.01	.226	-12.5	3.00	-10.0	.017	1.7058	1.6679
822	3.01	.226	-2.5	3.00	-5.0	.065	1.7269	1.7192
823	2.02	.152	-12.5	3.00	-10.0	.093	0.6801	0.6951
824	2.52	.189	-10.0	3.00	5.0	.111	1.2235	1.2209
825	2.01	.150	-5.0	3.00	-15.0	.112	0.6645	0.6826
826	2.48	.186	-12.5	6.00	-10.0	.190	0.8937	0.8776
827	2.48	.186	-12.5	5.00	5.0	.281	1.2508	1.2680
828	2.99	.224	0.0	3.00	-5.0	.084	1.6927	1.6799
829	1.99	.149	5.0	6.00	-10.0	.287	0.5056	0.5001
830	2.00	.150	-5.0	3.00	-10.0	.076	0.7271	0.7538
831	2.50	.187	-2.5	5.00	-20.0	.248	0.5080	0.5106
832	2.99	.224	-2.5	3.00	-5.0	.065	1.6971	1.7002
833	1.96	.147	-5.0	6.00	-5.0	.263	0.6099	0.6023
834	2.95	.221	5.0	5.00	0.0	.063	1.7243	1.6955
835	2.96	.222	-5.0	6.00	0.0	.034	1.7256	1.7067
836	1.98	.148	-12.5	3.00	-20.0	.019	0.6740	0.6477
839	2.06	.155	5.0	4.00	0.0	.192	0.8187	0.8140
840	2.03	.153	-7.5	3.00	5.0	.088	0.8044 *	0.8199
841	2.98	.223	0.0	5.00	-20.0	.219	0.8232	0.9760
842	2.99	.224	-7.5	6.00	-15.0	.031	1.6334	1.6111
845	2.98	.223	5.0	6.00	-10.0	.174	1.4724	1.5199
846	3.01	.226	-2.5	3.00	-5.0	.053	1.7353	1.7348
847	2.54	.190	-7.5	5.00	0.0	.242	1.1488 *	1.1795
848	3.01	.226	-10.0	5.00	0.0	.204	1.5472	1.6471

TABLE A-19 (cont'd)

MEASURED AND FITTED SIDE FØRCE
BETA=10.DEG

RUN	CV	W	PHI	THETA	PSI	ZT	MEASURED	FITTED
849	2.55	.191	0.0	5.00	-5.0	.046	1.2464	1.2537
850	2.54	.191	-2.5	4.00	-15.0	.180	0.8884	0.9187
851	2.08	.156	0.0	5.00	5.0	.038	0.8402	0.8491
852	2.53	.190	5.0	6.00	-20.0	.212	0.5840 *	0.7676
853	2.05	.154	-5.0	8.00	-15.0	.288	0.4339	0.4074
855	3.01	.226	-5.0	2.00	5.0	.074	1.7616	1.7693
856	2.53	.190	-12.5	4.00	-10.0	.182	0.9102	0.8975
857	3.00	.225	-2.5	3.00	-5.0	.049	1.7218	1.7285
858	2.99	.224	-5.0	4.00	0.0	.157	1.6800	1.6747
859	2.53	.190	-5.0	6.00	-5.0	.169	1.1408	1.1326
861	2.54	.190	-12.5	4.00	-5.0	.209	0.9987	0.9792
862	2.97	.223	-12.5	5.00	-20.0	.057	1.3532	1.3872
863	3.00	.225	-5.0	4.00	-5.0	.026	0.5568 *	1.7433

MEAN ERRØR= -0.1071
STANDARD DEVIATIØN= 0.3157

TABLE A-20

MEASURED AND FITTED SIDE FORCE
BETA=15.DEG

RUN	CV	W	PHI	THETA	PSI	ZT	MEASURED	FITTED
141	4.00	.000	5.0	3.60	5.0	.050	0.0306*	0.0124
142	4.00	.000	-0.3	2.60	0.0	.063	0.0121*	-0.0153
143	3.00	.000	4.7	2.60	0.0	.053	0.0074*	-0.0197
144	6.00	.000	14.8	3.00	0.0	.149	0.2005	0.1560
145	4.00	.000	4.8	3.60	0.0	.050	0.0087*	-0.0140
146	4.00	.000	-5.2	3.60	0.0	.050	0.0129*	-0.0166
147	4.00	.000	-0.3	3.60	0.0	.058	0.0104*	-0.0154
148	4.00	.000	-0.3	3.60	0.0	.061	0.0112*	-0.0154
149	4.00	.000	-0.3	3.60	0.0	.076	0.0116*	-0.0157
150	4.00	.000	-0.3	3.60	0.0	.113	0.0113*	-0.0163
151	4.00	.000	-0.3	3.60	0.0	.163	0.0129*	-0.0170
152	4.00	.000	-0.3	3.70	0.0	.216	0.0117*	-0.0175
153	2.00	.000	-2.1	3.60	0.0	.114	0.0051*	-0.0121
154	3.00	.000	-0.3	3.60	0.0	.077	0.0077*	-0.0151
155	5.00	.000	-0.3	3.60	0.0	.051	0.0135*	-0.0158
156	6.00	.000	-0.3	3.60	0.0	.043	0.0132*	-0.0163
157	4.00	.000	9.8	3.60	0.0	.035	0.0086*	-0.0187
158	4.00	.000	14.7	3.60	0.0	.014	0.0134*	-0.0317
159	3.00	.000	14.7	3.60	0.0	.169	0.0596	0.0405
160	4.00	.000	19.8	3.60	0.0	-.005	0.0234*	-0.0459
161	4.00	.000	19.8	4.60	0.0	.155	0.1665	0.1585
162	4.00	.000	19.7	4.60	0.0	.162	0.1736	0.1644
163	4.00	.000	-0.3	4.60	0.0	.058	0.0087*	-0.0157
164	4.00	.000	-0.3	5.60	0.0	.056	0.0083*	-0.0160
165	2.00	.000	4.7	5.60	0.0	.371	0.0374*	-0.0051
166	6.00	.000	9.7	5.60	0.0	.029	0.0094*	0.0520
167	3.00	.000	19.7	5.60	0.0	.161	0.1088	0.1175
168	3.00	.000	19.7	5.60	0.0	.280	0.1732	0.1889
169	2.00	.000	19.7	6.60	0.0	.067	0.0265*	-0.0256
170	5.00	.000	9.7	6.60	0.0	.030	0.0157*	0.0393
171	4.00	.000	9.7	6.60	0.0	.147	0.1360	0.0929
172	3.00	.000	-5.3	6.60	0.0	.082	0.0148*	-0.0269
173	4.00	.000	-0.3	6.60	0.0	.055	0.0093*	-0.0164
174	6.00	.000	-5.2	6.60	0.0	.039	0.0098*	-0.0707
175	4.00	.000	4.7	3.60	5.0	.061	0.0338	0.0289
185	4.00	.000	4.7	3.60	5.0	.046	0.0254*	0.0068
186	4.00	.000	-0.3	3.60	5.0	.065	0.0349	0.0263
187	3.00	.000	-5.3	3.60	5.0	.119	0.0452	0.0477
189	5.00	.000	-0.3	2.50	5.0	.063	0.0447*	0.0643
191	4.00	.000	9.8	3.60	5.0	.173	0.2603	0.2465
192	4.00	.000	9.7	3.60	5.0	.177	0.2589	0.2508
193	3.00	.000	14.7	3.70	5.0	.250	0.2992	0.2655
194	3.00	.000	14.7	3.60	5.0	.017	0.0178*	-0.0260
195	3.00	.000	14.7	1.60	5.0	.048	0.0256*	0.0556
196	6.00	.000	-5.2	5.60	5.0	.035	0.0357*	-0.0465
197	6.00	.000	9.7	5.60	5.0	.026	0.0315*	0.0523
198	6.00	.000	19.8	5.60	5.0	-.016	0.0396	0.0426
199	2.00	.000	-0.3	5.60	5.0	.101	0.0211*	0.0042
200	2.00	.000	-5.3	5.60	5.0	.257	0.0532	0.0559
201	4.00	.000	19.8	5.60	5.0	.139	0.3649	0.3522

TABLE A-20 (cont'd)

MEASURED AND FITTED SIDE FØRCE
BETA=15.DEG

RUN	CV	W	PHI	THETA	PSI	ZT	MEASURED	FITTED
202	5.00	.000	14.7	6.60	5.0	.010	0.0253*	0.0695
203	5.00	.000	4.7	6.60	5.0	.036	0.0341	0.0310
204	5.00	.000	4.8	6.60	5.0	.037	0.0308*	0.0331
205	3.00	.000	-5.3	6.60	5.0	.279	0.0554	0.0941
206	4.00	.000	4.7	3.60	5.0	.055	0.0267	0.0193
207	4.00	.000	-0.3	3.60	-5.0	.063	-0.0170*	-0.0542
208	6.00	.000	14.7	3.60	-5.0	.155	-0.2395	-0.1917
210	5.00	.000	-0.3	2.50	-5.0	.103	-0.1039*	-0.1728
211	4.00	.000	4.7	2.60	-5.0	.094	-0.0412*	-0.1041
212	2.00	.000	4.7	2.60	-5.0	.162	-0.0193*	-0.0813
213	4.00	.000	9.8	2.60	-5.0	.043	-0.0081*	-0.0634
214	2.00	.000	-0.3	4.60	-5.0	.170	-0.0139*	-0.0630
215	6.00	.000	14.8	4.60	-5.0	.126	-0.1005	-0.0918
216	5.00	.000	14.7	5.50	-5.0	.150	-0.0420	-0.0560
218	3.00	.000	9.7	5.60	-5.0	.242	-0.0394*	-0.0963
219	4.00	.000	9.7	5.60	-5.0	.045	-0.0131*	-0.0313
220	6.00	.000	14.8	5.60	-5.0	.007	-0.0009*	0.0397
221	6.00	.000	14.8	6.60	-5.0	.005	-0.0125*	0.0610
222	4.00	.000	9.7	6.60	-5.0	.044	-0.0167*	-0.0263
223	3.00	.000	19.7	6.60	10.0	-.009	0.0274*	0.0011
224	4.00	.000	19.7	6.60	10.0	-.014	0.0412	0.0405
225	2.00	.000	-5.3	6.60	10.0	.104	0.0315	0.0398
226	3.00	.000	4.7	6.60	10.0	.117	0.1154	0.1163
227	5.00	.000	-0.3	6.50	10.0	.070	0.1151	0.0967
228	3.00	.000	14.8	6.60	10.0	.191	0.3800	0.3698
231	3.00	.000	19.8	4.60	10.0	.179	0.4462	0.3987
232	5.00	.000	14.7	4.50	10.0	.035	0.0976	0.1170
233	2.00	.000	14.7	4.60	10.0	.037	0.0195*	-0.0267
234	4.00	.000	4.8	3.60	5.0	.054	0.0267	0.0192
235	5.00	.000	4.8	3.50	10.0	.1[illegible]8	0.3345	0.3364
238	3.00	.000	9.7	3.60	10.0	.240	0.3635	0.3838
239	4.00	.000	9.8	3.60	10.0	.059	0.0680	0.0903
240	5.00	.000	8.6	3.50	10.0	.020	0.0515*	-0.0228
241	3.00	.000	4.8	3.60	10.0	.131	0.1088	0.1435
242	4.00	.000	-0.3	3.60	10.0	.064	0.0640	0.0635
243	4.00	.000	9.7	2.60	10.0	.050	0.0561*	0.0816
244	3.00	.000	19.7	5.60	10.0	-.003	0.0352*	-0.0075
245	3.00	.000	-4.9	5.50	10.0	.180	0.1457	0.1616
246	5.00	.000	-5.2	5.50	15.0	.077	0.2083	0.1725
247	3.00	.000	-0.3	5.60	15.0	.165	0.2074	0.2328
248	5.00	.000	14.8	5.50	15.0	.029	0.1088	0.1293
249	6.00	.000	14.7	5.60	15.0	.016	0.0858	0.0705
250	5.00	.000	-0.3	5.50	15.0	.044	0.0881*	0.0237
251	2.00	.000	4.7	6.60	15.0	.091	0.0416	0.0359
252	6.00	.000	3.9	6.60	15.0	.026	0.0870*	-0.0296
253	3.00	.000	19.7	6.60	15.0	.018	0.0694*	0.1097
254	4.00	.000	-5.3	6.60	15.0	.150	0.2899	0.3103
255	6.00	.000	-5.3	4.60	15.0	.067	0.2039	0.1888
256	3.00	.000	14.7	4.60	15.0	.094	0.1909	0.1935
257	5.00	.000	9.8	4.50	15.0	.077	0.2519	0.2773

TABLE A-20 (cont'd)

MEASURED AND FITTED SIDE FORCE
BETA=15.DEG

RUN	CV	W	PHI	THETA	PSI	ZT	MEASURED	FITTED
258	3.00	.000	4.7	4.60	15.0	.266	0.5347	0.5338
260	4.00	.000	-0.3	4.60	15.0	.230	0.6739	0.6726
261	4.00	.000	-0.3	4.60	15.0	.049	0.0561*	0.0308
262	3.00	.000	9.8	4.60	15.0	.056	0.0457	0.0402
263	6.00	.000	9.8	4.60	15.0	.033	0.0955*	0.0435
264	4.00	.000	-0.3	3.60	15.0	.069	0.0892	0.1139
265	6.00	.000	19.8	3.60	15.0	-.009	0.0940*	-0.0235
266	4.00	.000	9.8	2.60	15.0	.053	0.0787*	0.1282
267	3.00	.000	9.8	2.60	15.0	.095	0.1376	0.1826
268	3.00	.000	4.7	2.60	15.0	.089	0.0996	0.1340
270	6.00	.000	4.8	2.50	15.0	.099	0.5475	0.5761
271	6.00	.000	4.8	2.50	15.0	.097	0.5266	0.5592
275	4.00	.000	9.8	2.50	15.0	.117	0.4025	0.4126
276	4.00	.000	4.8	3.60	5.0	.058	0.0294	0.0241
277	4.00	.000	-0.3	3.60	20.0	.068	0.1236	0.1418
277	3.00	.000	14.7	3.50	20.0	.049	0.0963	0.1029
279	4.00	.000	4.8	3.50	20.0	.133	0.5099	0.4814
280	6.00	.000	4.8	2.50	20.0	.100	0.7260	0.7315
281	5.00	.000	4.8	2.50	20.0	.168	1.2512*	1.0867
282	6.00	.000	14.7	2.50	20.0	.028	0.1978	0.1660
283	4.00	.000	14.7	2.50	20.0	.034	0.1082	0.1415
286	4.00	.000	14.7	2.50	20.0	.020	0.0571*	0.0639
286	3.00	.000	9.7	4.50	20.0	.043	0.0420	0.0095
287	3.00	.000	9.7	4.50	20.0	.075	0.1099	0.1081
288	4.00	.000	19.8	4.50	20.0	-.004	0.0638*	0.0311
289	2.00	.000	14.7	4.50	20.0	.098	0.1058	0.1037
290	2.00	.000	19.8	4.60	20.0	.136	0.2482	0.2498
294	3.00	.000	-0.3	5.50	20.0	.090	0.1267	0.1110
295	3.00	.000	-0.3	5.60	20.0	.056	0.0601*	0.0337
296	4.00	.000	-0.3	6.60	20.0	.046	0.0690	0.0622
297	4.00	.000	4.7	3.60	5.0	.059	0.0286	0.0260
298	4.00	.000	4.8	1.60	5.0	.082	0.0525*	0.0924
299	4.00	.000	14.7	1.60	5.0	.038	0.0346*	0.0673
300	5.00	.000	-0.3	1.50	15.0	.051	0.3336*	0.2153
109	2.35	.059	0.0	3.00	0.0	.069	0.3564	0.3592
110	2.92	.073	0.0	3.00	0.0	.060	0.5560	0.5589
111	3.88	.097	0.0	3.00	0.0	.052	0.9785	0.9867
112	4.95	.124	0.0	3.00	0.0	.045	1.5965	1.6218
113	6.02	.150	0.0	3.00	0.0	.037	2.3683	2.4151
114	2.87	.072	0.0	3.00	0.0	.049	0.5312	0.5395
115	3.02	.076	0.0	3.00	0.0	.081	0.5854	0.5951
116	3.01	.075	0.0	3.00	0.0	.155	0.5901	0.5858
117	2.82	.071	0.0	3.00	0.0	.156	0.5166	0.5154
119	4.03	.101	0.0	3.00	0.0	.181	1.0613	1.0632
120	3.03	.076	5.0	3.00	0.0	.059	0.5987	0.5984
121	3.02	.075	-5.0	3.00	0.0	.056	0.5959	0.5992
122	2.87	.072	-10.0	3.00	0.0	.052	0.5350	0.5421
123	2.89	.072	-15.0	3.00	0.0	.046	0.5265	0.5423
124	3.05	.076	-20.0	3.00	0.0	.040	0.5782	0.5796
125	3.06	.076	0.0	3.00	5.0	.058	0.6235	0.6296

TABLE A-20 (cont'd)

MEASURED AND FITTED SIDE FØRCE
BETA=15.DEG

RUN	CV	W	PHI	THETA	PSI	ZT	MEASURED	FITTED
127	3.01	.075	0.0	3.00	-10.0	.067	0.5218	0.5261
128	3.03	.076	0.0	3.00	-15.0	.066	0.4907	0.4912
129	3.01	.075	0.0	3.00	-20.0	.055	0.4602	0.4788
130	2.99	.075	0.0	2.00	0.0	.066	0.5775	0.5876
131	3.02	.075	0.0	4.00	0.0	.063	0.5833	0.5939
132	3.06	.076	0.0	5.00	0.0	.054	0.6048	0.6109
133	3.06	.076	0.0	6.00	0.0	.057	0.6081	0.6114
136	4.04	.101	-5.0	3.00	0.0	.095	1.0313	1.0564
137	6.09	.152	-15.0	5.00	-10.0	.003	2.3311	2.3760
138	6.05	.151	-20.0	6.00	-5.0	-.018	2.3088	2.3519
139	4.02	.100	-20.0	6.00	-20.0	-.022	0.9206	0.8983
140	5.00	.125	5.0	3.00	-20.0	.022	1.4357	1.4728
141	4.99	.125	5.0	3.00	-20.0	.021	1.4322	1.4686
142	2.91	.073	-5.0	3.00	-5.0	.056	0.5343	0.5346
143	1.65	.041	-10.0	6.00	0.0	.153	0.1533	0.1617
144	3.79	.095	-10.0	3.00	-20.0	.093	0.4371	0.4870
145	4.76	.119	5.0	2.00	-5.0	.045	1.4341	1.4337
147	3.87	.097	-5.0	6.00	-20.0	.026	0.8477	0.8957
148	5.86	.146	-10.0	3.00	5.0	.097	2.3495	2.3925
150	3.94	.098	-15.0	4.00	-5.0	.093	0.8105	0.8217
151	2.95	.074	-10.0	2.00	-10.0	.105	0.3982	0.3693
154	4.78	.120	-5.0	3.00	-5.0	.032	1.4490	1.4847
156	3.00	.075	0.0	2.00	-10.0	.053	0.5299	0.5262
157	3.02	.076	-5.0	6.00	-15.0	.050	0.5077	0.5245
158	3.99	.100	-5.0	6.00	-15.0	.040	0.9102	0.9436
160	2.40	.060	-10.0	2.00	-20.0	.044	0.2694	0.2770
161	6.18	.154	5.0	3.00	-20.0	.044	2.0359	2.0660
162	6.21	.155	5.0	3.00	-20.0	.040	2.0655	2.1241
163	6.18	.154	-10.0	2.00	-15.0	.004	2.3004	2.4070
164	4.38	.110	-10.0	5.00	-20.0	.041	0.9948	1.0278
165	3.23	.081	-10.0	2.00	-20.0	.082	0.2611	0.3366
166	2.15	.054	-10.0	4.00	-15.0	.037	0.2561	0.2979
167	2.64	.066	-5.0	3.00	-5.0	.065	0.4262	0.4321
168	5.65	.141	-5.0	5.00	5.0	.073	2.1459	2.1579
169	4.72	.118	-5.0	2.00	-10.0	.052	1.3042	1.2906
170	5.81	.145	5.0	3.00	-5.0	.040	2.1435	2.2155
171	4.74	.118	0.0	2.00	5.0	.064	1.5122	1.5490
173	5.91	.148	-5.0	3.00	0.0	.077	2.2818	2.2995
174	4.83	.121	-20.0	5.00	5.0	.045	1.5351	1.5508
175	6.04	.151	-20.0	5.00	-5.0	.020	2.1315	2.2045
177	3.75	.094	-10.0	5.00	5.0	.013	-0.2455 *	0.9435
178	2.96	.074	-5.0	3.00	-5.0	.048	0.5412	0.5587
180	3.18	.079	-15.0	4.00	-10.0	.111	0.4228	0.3996
181	5.11	.128	-5.0	2.00	-15.0	.046	1.5016 *	1.4299
182	2.15	.054	-15.0	3.00	5.0	.002	0.3009	0.3411
183	4.91	.123	-20.0	5.00	-15.0	.012	1.2205	1.2759
184	5.08	.127	5.0	4.00	0.0	.071	1.6655	1.7331
527	1.82	.068	0.0	3.00	0.0	.112	0.3257	0.3[illegible]38
528	2.87	.108	0.0	3.00	0.0	.076	0.8086	0.8119
529	3.87	.145	0.0	3.00	0.0	.052	1.4502	1.4807

TABLE A-20 (cont'd)

MEASURED AND FITTED SIDE FORCE
BETA=15.DEG

RUN	CV	W	PHI	THETA	PSI	ZT	MEASURED	FITTED
530	4.98	.187	0.0	3.00	0.0	.043	2.3953	2.4541
531	5.97	.224	0.0	3.00	0.0	.037	3.4632	3.5541
532	2.96	.111	0.0	3.00	0.0	.052	0.8427	0.8667
533	2.97	.111	0.0	3.00	0.0	.104	0.8407	0.8642
534	2.96	.111	0.0	3.00	0.0	.154	0.8385	0.8536
536	3.98	.149	0.0	3.00	0.0	.146	1.5240	1.5565
537	3.97	.149	0.0	3.00	0.0	.195	1.5623	1.5495
538	2.96	.111	5.0	3.00	0.0	.075	0.8364	0.8598
539	2.96	.111	-5.0	3.00	0.0	.074	0.8368	0.8589
540	3.00	.112	-10.0	3.00	0.0	.063	0.8566	0.8781
541	2.97	.111	-15.0	3.00	0.0	.044	0.8310	0.8613
542	2.98	.112	-20.0	3.00	0.0	.019	0.8259	0.8603
543	2.98	.112	0.0	3.00	5.0	.074	0.8756	0.8986
544	2.98	.112	0.0	3.00	-5.0	.078	0.7969	0.8338
545	2.99	.112	0.0	3.00	-10.0	.079	0.7623	0.7847
546	2.97	.112	0.0	3.00	-20.0	.057	0.6960	0.7326
547	2.99	.112	0.0	3.00	-15.0	.084	0.7049	0.7167
548	2.97	.111	0.0	2.00	0.0	.080	0.8398	0.8736
549	2.98	.112	0.0	4.00	0.0	.060	0.8475	0.8755
550	2.97	.112	0.0	5.00	0.0	.059	0.8450	0.8689
551	3.01	.113	0.0	6.00	0.0	.055	0.8650	0.8946
552	1.90	.071	-15.0	4.00	5.0	.136	0.3709*	0.3912
553	4.03	.151	-5.0	3.00	-5.0	.064	0.2336*	1.5305
555	5.98	.224	5.0	4.00	-20.0	.064	2.8715	2.9134
556	4.99	.187	-10.0	4.00	5.0	.136	2.3772*	2.5556
558	3.99	.150	-15.0	6.00	0.0	.003	1.5328	1.5858
559	3.00	.113	-5.0	3.00	-5.0	.071	0.8223	0.8464
560	6.00	.225	0.0	2.00	-5.0	.051	3.3728	3.4717
561	5.00	.188	-15.0	5.00	0.0	.065	2.2481	2.3708
564	6.01	.225	-20.0	3.00	5.0	.054	3.5427	3.6089
566	6.01	.225	0.0	3.00	5.0	.086	3.5901	3.6938
567	6.00	.225	-20.0	5.00	-20.0	-.008	2.9609	3.0301
568	3.98	.149	-10.0	6.00	0.0	.014	1.5224	1.5760
569	3.97	.149	5.0	4.00	-10.0	.169	1.1105	1.2115
570	2.99	.112	-5.0	3.00	0.0	.146	0.8312	0.8584
571	4.97	.186	-5.0	6.00	-20.0	.049	2.0491	2.0806
572	3.00	.112	-5.0	3.00	-5.0	.071	0.8158	0.8445
573	5.95	.223	-5.0	2.00	-20.0	.082	2.3595	2.4407
577	4.97	.186	5.0	3.00	-20.0	.106	1.5460	1.6447
579	1.99	.075	-15.0	6.00	-5.0	.186	0.2451	0.2394
580	2.96	.111	0.0	6.00	-20.0	.191	0.3478	0.3847
581	6.00	.225	-20.0	2.00	0.0	-.006	3.4145	3.5259
583	5.95	.223	-15.0	2.00	-5.0	.050	3.1955	3.2507
585	6.01	.225	-10.0	3.00	-5.0	.058	3.3150	3.3960
586	2.96	.111	-5.0	3.00	-5.0	.072	0.7957	0.8224
588	3.91	.147	-5.0	3.00	-5.0	.125	1.3063	1.3471
593	4.03	.151	-10.0	6.00	-5.0	.021	1.5242	1.5763
594	2.97	.111	-20.0	4.00	0.0	.138	0.7504	0.7454
595	3.01	.113	0.0	4.00	-15.0	.104	0.6959	0.6978
596	2.03	.076	-5.0	5.00	5.0	.276	0.4616	0.4707

TABLE A-20 (cont'd)

MEASURED AND FITTED SIDE FØRCE
BETA=15.DEG

RUN	CV	W	PHI	THETA	PSI	ZT	MEASURED	FITTED
598	3.01	.113	-10.0	5.00	-10.0	.128	0.6266	0.6627
599	3.02	.113	-5.0	3.00	-5.0	.073	0.8304	0.8518
600	2.01	.075	-10.0	6.00	-10.0	.254	0.1752	0.1500
601	5.02	.188	-20.0	5.00	-10.0	.026	2.1164	2.1587
602	5.05	.189	-20.0	2.00	-10.0	-.030	2.3567	2.4265
603	3.05	.114	-15.0	5.00	-15.0	.036	0.7605	0.7729
604	5.99	.225	-10.0	4.00	-15.0	.052	3.0583	3.0873
618	1.92	.144	0.0	3.00	0.0	.093	0.6970	0.7297
619	2.99	.224	0.0	3.00	0.0	.070	1.7081	1.7479
620	2.50	.188	0.0	3.00	0.0	.078	1.1957	1.2290
621	3.07	.230	0.0	3.00	0.0	.050	1.8069	1.8423
622	3.06	.230	0.0	3.00	0.0	.086	1.7861	1.8249
623	3.05	.228	0.0	3.00	0.0	.136	1.7688	1.7952
625	3.01	.226	5.0	3.00	0.0	.061	1.7335	1.7717
626	2.99	.224	-5.0	3.00	0.0	.066	1.7198	1.7426
627	3.01	.226	-10.0	3.00	0.0	.049	1.7298	1.7554
628	3.00	.225	-15.0	3.00	0.0	.028	1.7169	1.7410
629	3.01	.226	-20.0	3.00	0.0	.003	1.7125	1.7397
630	2.98	.223	0.0	3.00	5.0	.063	1.7095	1.7364
631	2.97	.223	0.0	3.00	-5.0	.070	1.6494	1.6949
632	2.96	.222	0.0	3.00	-10.0	.071	1.5855	1.6294
633	2.97	.223	0.0	3.00	-15.0	.072	1.5229	1.5611
634	2.97	.223	0.0	3.00	-20.0	.053	1.4849	1.5446
635	2.97	.223	0.0	2.00	0.0	.062	1.6896	1.7387
636	2.98	.223	0.0	4.00	0.0	.060	1.6962	1.7282
637	2.98	.223	0.0	5.00	0.0	.053	1.7002	1.7278
638	2.98	.223	0.0	6.00	0.0	.048	1.7005	1.7316
639	2.47	.185	0.0	6.00	-20.0	.058	1.0236	1.0587
640	2.48	.186	5.0	6.00	-5.0	.232	1.0744	1.0851
641	2.96	.222	-5.0	3.00	-5.0	.108	1.5813	1.6186
642	2.48	.186	-5.0	6.00	5.0	.275	1.1719	1.2269
643	1.97	.148	0.0	4.00	-10.0	.206	0.5848	0.6006
644	2.50	.187	-20.0	3.00	-10.0	-.010	1.1481	1.1544
645	1.99	.149	-20.0	3.00	-10.0	.069	0.6385	0.6189
646	2.96	.222	-5.0	3.00	-5.0	.061	1.6380	1.6773
660	2.99	.224	-15.0	3.00	5.0	.071	1.7025	1.7424
661	1.99	.150	-5.0	3.00	-15.0	.106	0.6321	0.6680
662	2.99	.224	-20.0	6.00	-10.0	.108	1.2473	1.3057
665	2.51	.188	0.0	3.00	-5.0	.092	1.1617	1.1992
667	3.00	.225	5.0	6.00	-10.0	.181	1.4438	1.5266
668	2.00	.150	-5.0	3.00	-10.0	.066	0.7182	0.7684
670	2.99	.224	-5.0	5.00	-20.0	.158	1.1389	1.2114
671	2.51	.188	5.0	5.00	0.0	.043	1.2104	1.2270
672	2.99	.224	-5.0	3.00	-5.0	.056	1.6703	1.7173
673	1.99	.149	-5.0	6.00	-5.0	.255	0.6309	0.6278
674	2.50	.188	5.0	5.00	0.0	.091	0.6825*	1.2104
675	2.50	.188	-5.0	6.00	0.0	.037	1.2035	1.2404
676	1.99	.149	-20.0	3.00	-20.0	-.023	0.6701	0.7066
678	1.99	.149	-10.0	3.00	5.0	.079	0.7651	0.8096
681	2.51	.188	-10.0	6.00	-15.0	.034	1.1089	1.1486

TABLE A-20 (cont'd)

MEASURED AND FITTED SIDE FØRCE
BETA=15.DEG

RUN	CV	W	PHI	THETA	PSI	ZT	MEASURED	FITTED
682	2.50	.187	5.0	6.00	-10.0	.256	0.9101	0.9576
683	2.97	.223	-5.0	3.00	-5.0	.075	1.6642	1.6660
685	2.99	.224	-15.0	6.00	0.0	.229	1.4102	1.5103
686	2.50	.188	-15.0	8.00	0.0	.279	0.9182	0.9199
688	2.99	.224	0.0	5.00	-15.0	.185	1.3061	1.3269
689	2.00	.150	0.0	5.00	5.0	.077	0.7780	0.7864
690	3.00	.225	5.0	6.00	-20.0	.124	1.3795	1.3880
691	2.02	.152	-5.0	8.00	-15.0	.342	0.3305	0.3214
693	2.46	.185	-10.0	2.00	5.0	.086	1.1727	1.2260
694	2.96	.222	-20.0	4.00	-10.0	.124	1.2395	1.2719
695	2.96	.222	-5.0	3.00	-5.0	.073	1.6440	1.6629
697	2.47	.185	-10.0	6.00	0.0	.224	1.0554	1.0707
698	2.99	.224	-10.0	6.00	-5.0	.134	1.5291	1.5522
699	3.00	.225	5.0	8.00	-10.0	.222	1.4467	1.4910
700	3.00	.225	-20.0	4.00	-5.0	.177	1.3237	1.3777
701	2.48	.186	-20.0	5.00	-20.0	.087	0.7470	0.7496

MEAN ERRØR= -0.0265
STANDARD DEVIATIØN= 0.0270

TABLE A-21

MEASURED AND FITTED SIDE FORCE
BETA=20. DEG

RUN	CV	W	PHI	THETA	PSI	ZT	MEASURED	FITTED
316	4.00	.000	4.8	3.70	5.0	.086	0.0496	0.0451
317	4.00	.000	4.7	3.70	5.0	.088	0.0542	0.0480
318	4.00	.000	4.7	3.60	0.0	.131	0.0123	-0.0174*
319	4.00	.000	-0.3	3.60	0.0	.095	0.0166	-0.0270*
320	2.00	.000	-0.3	3.60	0.0	.152	0.0077	-0.0266*
321	2.00	.000	-0.3	3.70	0.0	.151	0.0076	-0.0265*
322	3.00	.000	-0.3	3.60	0.0	.113	0.0089	-0.0267*
323	5.00	.000	-0.3	3.60	0.0	.076	0.0138	-0.0273*
324	6.00	.000	-0.3	3.70	0.0	.067	0.0153	-0.0278*
325	4.00	.000	-0.3	3.60	0.0	.075	0.0106	-0.0268*
326	4.00	.000	4.7	3.60	0.0	.116	0.0144	-0.0201*
328	4.00	.000	9.7	3.70	0.0	.070	0.0032	-0.0255*
329	4.00	.000	14.7	3.70	0.0	.047	0.0048	-0.0248*
330	4.00	.000	19.8	3.60	0.0	.025	0.0160	-0.0166*
331	4.00	.000	27.2	3.60	0.0	-.006	0.0275	0.0239
332	3.00	.000	19.7	3.60	0.0	.191	0.0410	0.0875*
333	4.00	.000	-0.3	3.60	0.0	.153	0.0145	-0.0277*
335	5.00	.000	-0.3	3.60	0.0	.183	0.0066	-0.0285*
336	4.00	.000	-0.3	3.60	0.0	.200	0.0124	-0.0282*
337	4.00	.000	27.3	4.70	0.0	.179	0.1196	0.2583*
338	4.00	.000	-0.3	4.60	0.0	.076	0.0057	-0.0270*
339	4.00	.000	-0.3	2.60	0.0	.105	0.0051	-0.0270*
340	3.00	.000	4.7	2.60	0.0	.098	0.0031	-0.0323*
342	6.00	.000	19.8	3.70	0.0	.141	0.1848	0.1393
344	3.00	.000	27.3	5.70	0.0	.281	0.1052	0.3079*
345	3.00	.000	27.3	5.60	0.0	.173	0.0723	0.2133*
347	6.00	.000	-0.3	5.60	0.0	.059	0.0235	-0.0291*
348	4.00	.000	-0.3	5.60	0.0	.074	0.0128	-0.0273*
349	5.00	.000	4.8	5.60	0.0	.053	0.0132	-0.0085*
350	4.00	.000	-0.3	6.70	0.0	.068	0.0107	-0.0277*
351	6.00	.000	-5.3	6.70	0.0	.051	0.0263	-0.0795*
353	2.00	.000	27.2	6.70	0.0	.068	0.0207	0.0145
354	3.00	.000	-5.3	6.60	0.0	.110	0.0169	-0.0320*
355	4.00	.000	9.8	6.70	0.0	.186	0.0998	0.0469*
356	3.00	.000	-0.3	6.70	-5.0	.236	-0.0920	-0.1862*
357	4.00	.000	9.7	6.70	-5.0	.069	-0.0304	-0.0582*
358	4.00	.000	9.7	6.70	-5.0	.060	-0.0238	-0.0510*
359	4.00	.000	9.7	6.70	-5.0	.061	-0.0200	-0.0514*
362	4.00	.000	9.7	5.60	-5.0	.065	-0.0237	-0.0603*
364	3.00	.000	14.7	5.70	-5.0	.266	-0.1196	-0.1270
365	5.00	.000	19.8	5.60	-5.0	.170	-0.2110	-0.1608
366	6.00	.000	19.8	4.70	-5.0	.132	-0.2184	-0.1880
368	4.00	.000	9.7	2.60	-5.0	.109	-0.0591	-0.1477*
369	2.00	.000	9.7	2.60	-5.0	.172	-0.0272	-0.0872*
370	4.00	.000	14.7	2.60	-5.0	.045	-0.0096	-0.0868*
371	5.00	.000	4.7	2.60	-5.0	.145	-0.1495	-0.2821*
374	5.00	.000	-0.3	3.60	-5.0	.069	-0.0387	-0.0951*
375	5.00	.000	-0.3	3.60	-5.0	.067	-0.0395	-0.0898*
376	4.00	.000	-0.3	3.70	-5.0	.087	-0.0397	-0.0969*
377	4.00	.000	4.7	3.60	5.0	.081	0.0507	0.0371

TABLE A-21 (cont'd)

MEASURED AND FITTED SIDE FØRCE
BETA=20.DEG

RUN	CV	W	PHI	THETA	PSI	ZT	MEASURED	FITTED
378	4.00	.000	4.8	3.60	5.0	.064	0.0363	0.0085 *
379	4.00	.000	-0.3	3.60	5.0	.084	0.0611	0.0397
380	3.00	.000	-5.3	3.60	5.0	.148	0.0780	0.0675
381	3.00	.000	-0.3	2.60	5.0	.117	0.0641	0.0495
382	5.00	.000	4.7	2.60	5.0	.076	0.0728	0.0792
383	3.00	.000	19.7	2.60	5.0	.028	0.0207	-0.0139 *
385	5.00	.000	14.8	2.60	5.0	.153	0.3629	0.3692
387	6.00	.000	4.8	2.60	5.0	.151	0.3746	0.3877
388	3.00	.000	-5.2	6.70	5.0	.310	0.1143	0.1550
389	5.00	.000	9.7	6.60	5.0	.040	0.0232	0.0480 *
395	4.00	.000	27.4	5.60	5.0	.176	0.6101	0.5447
396	4.00	.000	4.8	3.60	5.0	.081	0.0512	0.0369
397	4.00	.000	-0.2	3.60	10.0	.084	0.1034	0.1054
398	3.00	.000	-5.3	3.60	10.0	.146	0.1440	0.1637
399	4.00	.000	9.8	3.60	10.0	.087	0.0831	0.1459 *
400	5.00	.000	19.7	3.60	10.0	.019	0.0496	0.0636
401	4.00	.000	14.8	3.60	10.0	.163	0.4902	0.4681
402	3.00	.000	14.7	6.60	10.0	.223	0.4020	0.4015
403	3.00	.000	4.7	6.60	10.0	.152	0.1746	0.1711
404	5.00	.000	-0.3	6.60	10.0	.091	0.1840	0.1766
405	2.00	.000	-5.3	6.60	10.0	.120	0.0524	0.0557
406	4.00	.000	27.3	6.60	10.0	-.027	0.0526	0.1262 *
407	3.00	.000	27.2	6.60	10.0	-.025	0.0338	[illegible].0426
408	2.00	.000	19.7	4.60	10.0	.038	0.0201	-0.0428 *
409	4.00	.000	9.7	2.60	10.0	.063	0.0656	0.0782
410	3.00	.000	27.3	5.60	10.0	-.016	0.0430	0.0424
411	3.00	.000	-5.2	5.60	10.0	.211	0.2206	0.2370
412	3.00	.000	-5.3	5.60	10.0	.212	0.2209	0.2376
413	5.00	.000	-5.2	5.50	15.0	.089	0.2873	0.2712
414	3.00	.000	-0.3	5.60	15.0	.201	0.3481	0.3565
415	5.00	.000	19.7	5.50	15.0	.028	0.1111	0.1870 *
417	5.00	.000	-0.3	5.50	15.0	.057	0.1235	0.0811
419	6.00	.000	27.2	3.60	15.0	-.048	0.0639	-0.1932 *
420	4.00	.000	14.8	2.60	15.0	.056	0.1045	0.1575 *
421	3.00	.000	4.8	2.60	15.0	.109	0.1676	0.1744
422	3.00	.000	9.8	2.60	15.0	.152	0.2435	0.3376 *
423	4.00	.000	14.8	2.60	15.0	.130	0.5697	0.5404
424	6.00	.000	4.8	2.60	15.0	.125	0.8731	0.9026
427	5.00	.000	14.8	4.50	15.0	.077	0.3131	0.3578
428	4.00	.000	4.8	4.60	15.0	.215	0.7305	0.7461
429	4.00	.000	-0.2	4.70	15.0	.290	1.1766	1.0497 *
430	6.00	.000	-5.2	4.60	15.0	.080	0.3226	0.3340
431	3.00	.000	14.8	4.60	15.0	.135	0.2788	0.2917
432	5.00	.000	14.8	4.60	15.0	.033	0.0664	0.0723
433	3.00	.000	14.7	4.60	15.0	.056	0.0550	0.0481
434	4.00	.000	-0.3	4.60	15.0	.063	0.0944	0.0663
435	2.00	.000	4.7	6.70	15.0	.123	0.0732	0.0676
436	6.00	.000	9.7	6.70	15.0	.041	0.1021	0.1190
437	3.00	.000	27.2	6.60	15.0	.001	0.0761	0.1702 *
438	4.00	.000	-5.2	6.60	15.0	.185	0.5139	0.5345

TABLE A-21 (cont'd)

MEASURED AND FITTED SIDE FØRCE
BETA=20.DEG

RUN	CV	W	PHI	THETA	PSI	ZT	MEASURED	FITTED
439	4.00	.000	-0.3	6.60	20.0	.051	0.0868	0.0846
440	3.00	.000	4.7	5.60	20.0	.075	0.0902	0.0787
443	6.00	.000	27.2	5.50	20.0	-.013	0.2486	0.2302*
445	2.00	.000	27.3	4.60	20.0	.138	0.3098	0.4225
446	4.00	.000	27.2	4.60	20.0	-.025	0.0795	0.0732
447	2.00	.000	19.8	4.60	20.0	.112	0.1502	0.1755
448	3.00	.000	4.7	4.60	20.0	.115	0.2364	0.2063
449	3.00	.000	9.7	4.60	20.0	.065	0.0830	0.0554
450	4.00	.000	-0.3	3.60	20.0	.085	0.2344	0.2497
451	3.00	.000	19.7	3.60	20.0	.057	0.1380	0.1705
453	6.00	.000	9.8	3.60	20.0	.119	1.0838	1.0623
454	4.00	.000	9.8	3.60	20.0	.190	1.0960	0.9299*
455	6.00	.000	19.7	2.60	20.0	.032	0.2110	0.3312*
456	4.00	.000	14.8	2.60	20.0	.072	0.2788	0.3205
457	4.00	.000	19.8	1.60	20.0	.014	0.0488	0.1029*
459	4.00	.000	4.8	3.60	5.0	.077	0.0439	0.0310
211	2.07	.052	0.0	3.00	0.0	.106	0.2649	0.2551
212	2.96	.074	0.0	3.00	0.0	.079	0.5424	0.5353
213	3.92	.098	0.0	3.00	0.0	.070	0.9555	0.9542
214	5.00	.125	0.0	3.00	0.0	.056	1.5583	1.5660
215	5.96	.149	0.0	3.00	0.0	.047	2.2594	2.2491
216	2.94	.074	0.0	3.00	0.0	.069	0.5381	0.5281
217	3.01	.075	0.0	3.00	0.0	.106	0.5613	0.5570
218	3.02	.075	0.0	3.00	0.0	.146	0.5684	0.5585
219	3.97	.099	0.0	3.00	0.0	.122	0.9735	0.9753
220	4.00	.100	0.0	3.00	0.0	.147	0.9974	0.9879
221	5.00	.125	0.0	3.00	0.0	.120	1.5415	1.5575
222	4.95	.124	0.0	3.00	0.0	.146	1.5315	1.5190
223	5.96	.149	0.0	3.00	0.0	.116	2.2380	2.2245
224	3.00	.075	5.0	3.00	0.0	.074	0.5526	0.5411
225	2.97	.074	-5.0	3.00	0.0	.074	0.5572	0.5516
226	2.99	.075	-10.0	3.00	0.0	.069	0.5645	0.5684
227	2.99	.075	-15.0	3.00	0.0	.060	0.5551	0.5715
228	2.97	.074	-20.0	3.00	0.0	.048	0.5352	0.5588
229	2.95	.074	-27.5	3.00	0.0	.029	0.5215	0.5061
230	2.98	.074	0.0	3.00	5.0	.079	0.5882	0.5717
231	2.98	.074	0.0	3.00	-5.0	.078	0.5120	0.5064
232	2.94	.073	0.0	3.00	-10.0	.079	0.4534	0.4486
233	3.02	.075	0.0	3.00	-15.0	.078	0.4199	0.4219
234	3.01	.075	0.0	3.00	-20.0	.088	0.3015	0.3284
235	2.98	.075	0.0	2.00	0.0	.088	0.5548	0.5494
236	3.00	.075	0.0	4.00	0.0	.078	0.5595	0.5490
237	3.01	.075	0.0	5.00	0.0	.081	0.5676	0.5578
238	2.97	.074	0.0	6.00	0.0	.065	0.5517	0.5488
239	4.90	.123	5.0	2.00	0.0	.123	1.5111	1.5265
240	4.00	.100	-5.0	3.00	0.0	.125	0.9847	0.9802
241	5.99	.150	-15.0	5.00	-10.0	.014	2.1832	2.2123
242	5.99	.150	-27.5	6.00	-5.0	-.038	2.1501	2.1493
243	3.97	.099	-27.5	6.00	-20.0	-.046	0.8487	0.8527
244	2.99	.075	-5.0	3.00	-5.0	.077	0.5186	0.5171

TABLE A-21 (cont'd)

MEASURED AND FITTED SIDE FORCE
BETA=20.DEG

RUN	CV	W	PHI	THETA	PSI	ZT	MEASURED	FITTED
245	4.91	.123	5.0	3.00	-20.0	.056	1.1198	1.0851
246	1.74	.044	-15.0	6.00	0.0	.155	0.1756	0.1839
247	3.90	.098	-10.0	2.00	-20.0	.111	0.0355	0.2964*
248	4.96	.124	5.0	2.00	-5.0	.059	1.4599	1.4698
250	3.99	.100	-5.0	6.00	-20.0	.058	0.7667	0.7531
252	6.05	.151	-10.0	3.00	5.0	.105	2.4590	2.4783
254	3.98	.099	-20.0	4.00	-5.0	.104	0.7736	0.7646
255	2.99	.075	-10.0	3.00	-10.0	.136	0.3386	0.3298
256	2.97	.074	-5.0	3.00	-5.0	.079	0.5146	0.5109
259	5.02	.125	-20.0	4.00	5.0	.135	1.7003	1.7068
261	3.00	.075	-5.0	2.00	-10.0	.067	0.4881	0.4828
262	4.01	.100	-5.0	6.00	-15.0	.059	0.8444	0.8438
263	2.10	.053	-15.0	2.00	-20.0	.055	0.1707	0.1815
264	6.06	.152	5.0	3.00	-20.0	.052	1.7126	1.6946
265	6.09	.152	-15.0	2.00	-15.0	.027	2.0185	2.0191
266	4.00	.100	-10.0	5.00	-20.0	.086	0.5749	0.5720
267	4.93	.123	-15.0	2.00	-20.0	.063	0.8090	0.8506
268	2.98	.074	-5.0	3.00	-5.0	.078	0.5138	0.5128
269	2.03	.051	-15.0	4.00	-15.0	.069	0.1941	0.2104
270	5.97	.149	-5.0	5.00	5.0	.095	2.0709	2.3222*
271	4.95	.124	-10.0	2.00	-10.0	.056	1.3569	1.3281
272	5.95	.148	0.0	3.00	-5.0	.067	2.1125	2.1108
273	5.00	.125	-5.0	2.00	5.0	.069	1.6507	1.6585
274	5.95	.149	-5.0	3.00	0.0	.099	2.2643	2.2060
275	4.97	.124	-20.0	5.00	5.0	.040	1.5923	1.5483
276	5.98	.150	-25.0	5.00	-5.0	.031	1.9838	1.9941
278	5.62	.140	5.0	6.00	-15.0	.104	1.3980	1.3872
279	2.75	.069	-5.0	3.00	-5.0	.093	0.4456	0.4249
280	3.69	.092	-15.0	5.00	5.0	.021	0.8778	0.8738
282	4.09	.102	-20.0	4.00	-10.0	.083	0.7795	0.7216
283	4.92	.123	-10.0	2.00	-15.0	.066	1.2233	1.0969*
284	2.06	.052	-20.0	3.00	5.0	.062	0.2806	0.3154*
285	4.84	.121	-25.0	5.00	-15.0	.025	1.1558	1.0709
312	2.26	.085	0.0	3.00	0.0	.095	0.4683	0.4711
313	3.20	.120	0.0	3.00	0.0	.084	0.9530	0.9514
314	4.29	.161	0.0	3.00	0.0	.055	1.7325	1.7241
315	5.24	.196	0.0	3.00	0.0	.046	2.5880	2.5804
316	6.14	.230	0.0	3.00	0.0	.037	3.5489	3.5622
317	3.12	.117	0.0	3.00	0.0	.063	0.9094	0.9021
318	3.01	.113	0.0	3.00	0.0	.125	0.8335	0.8413
320	4.16	.156	0.0	3.00	0.0	.125	1.5891	1.6085
321	4.05	.152	0.0	3.00	0.0	.125	1.5267	1.5300
324	4.99	.187	0.0	3.00	0.0	.129	2.2923	2.3151
325	4.99	.187	0.0	3.00	0.0	.152	2.3103	2.3037
326	3.01	.113	5.0	3.00	0.0	.078	0.8424	0.8391
327	3.01	.113	-5.0	3.00	0.0	.081	0.8487	0.8514
328	2.99	.112	-10.0	3.00	0.0	.071	0.8465	0.8468
329	3.01	.113	-15.0	3.00	0.0	.051	0.8482	0.8682
330	3.02	.113	-20.0	3.00	0.0	.044	0.8358	0.8666
331	2.99	.112	-27.5	3.00	0.0	.021	0.8083	0.8184

TABLE A-21 (cont'd)

MEASURED AND FITTED SIDE FORCE
BETA=20. DEG

RUN	CV	W	PHI	THETA	PSI	ZT	MEASURED	FITTED
332	2.95	.111	0.0	3.00	5.0	.041	0.8317	0.7943
333	3.05	.114	0.0	3.00	-5.0	.092	0.8106	0.8118
334	2.81	.106	0.0	3.00	-10.0	.097	0.6326	0.6285
335	2.81	.105	0.0	3.00	-15.0	.098	0.5603	0.5595
336	2.83	.106	0.0	3.00	-20.0	.068	0.5799	0.5862
337	2.87	.107	0.0	2.00	0.0	.105	0.7594	0.7722
338	2.90	.109	0.0	4.00	0.0	.078	0.7798	0.7794
341	3.06	.115	0.0	5.00	0.0	.081	0.8698	0.8712
346	1.90	.071	-20.0	4.00	5.0	.136	0.3638	0.3774
347	4.06	.152	-5.0	3.00	-5.0	.086	1.4462	1.4453
348	4.97	.186	5.0	4.00	-20.0	.086	1.6951	1.6133 *
349	4.99	.187	-15.0	4.00	5.0	.175	2.4595	2.4868
350	3.01	.113	-5.0	3.00	-5.0	.087	0.7995	0.7996
351	4.05	.152	-15.0	6.00	0.0	.019	1.5435	1.5473
352	5.94	.223	-0.0	2.00	-5.0	.040	3.2620	3.2892
353	4.99	.187	-20.0	5.00	0.0	.072	2.1786	2.2309
355	5.00	.187	-20.0	5.00	0.0	.079	2.2013	2.2355
359	4.00	.150	-25.0	5.00	5.0	.098	1.5355	1.5326
360	4.00	.150	0.0	4.00	5.0	.209	1.6505	1.6828
361	5.99	.225	-25.0	5.00	-20.0	-.011	2.9348	2.9057
362	4.01	.150	-15.0	6.00	0.0	.016	1.5144	1.5152
363	4.04	.152	5.0	4.00	-10.0	.192	1.0204	1.0229
364	4.03	.151	-5.0	3.00	0.0	.129	1.4898	1.4951
365	2.97	.111	-5.0	3.00	-5.0	.091	0.7706	0.7747
366	4.97	.187	-10.0	6.00	-20.0	.055	1.9684	1.8154 *
370	5.52	.207	-5.0	3.00	-20.0	.090	1.7890	1.8361
371	5.02	.188	5.0	3.00	0.0	.069	2.3686	2.3861
372	2.99	.112	5.0	2.00	-20.0	.094	0.5017	0.5175
373	1.97	.074	-20.0	6.00	-5.0	.187	0.2374	0.2176
374	2.92	.109	-20.0	6.00	-5.0	.105	0.6882	0.6683
376	5.00	.187	-5.0	2.00	0.0	.071	2.3546	2.3457
378	4.02	.151	0.0	6.00	-20.0	.126	0.8694	0.8767
379	6.01	.225	-20.0	2.00	0.0	.004	3.3995	3.4206
380	4.97	.187	-20.0	2.00	-5.0	.082	2.0494	2.0667
381	2.99	.112	-5.0	3.00	-5.0	.082	0.7873	0.7926
384	5.95	.223	-10.0	3.00	5.0	.094	3.4555	3.4309
386	4.85	.182	-15.0	3.00	-5.0	.092	2.0087	1.9869
387	5.12	.192	-5.0	3.00	-5.0	.114	2.2275	2.2136
390	6.10	.229	5.0	5.00	-15.0	.089	2.8433	2.8384
395	4.23	.158	-10.0	6.00	-5.0	.038	1.6378	1.6478
396	3.19	.119	-27.5	4.00	0.0	.128	0.8534	0.8081
397	3.15	.118	-5.0	4.00	-15.0	.097	0.7044	0.7130
398	4.10	.154	-5.0	5.00	5.0	.137	1.6412	1.6564
399	3.07	.115	-5.0	3.00	-5.0	.061	0.8476	0.8596
402	6.06	.227	-10.0	2.00	5.0	.040	3.5093	3.4850
403	3.11	.117	-10.0	5.00	-10.0	.151	0.6090	0.6383
404	2.98	.112	-15.0	6.00	-10.0	.135	0.5595	0.5789
405	4.04	.151	-20.0	5.00	-10.0	.090	1.1725	1.1717
702	2.99	.224	0.0	3.00	0.0	.093	1.6427	1.6413
703	1.98	.149	0.0	3.00	0.0	.123	0.7154	0.7389

TABLE A-21 (cont'd)

MEASURED AND FITTED SIDE FØRCE
BETA=20.DEG

RUN	CV	W	PHI	THETA	PSI	ZT	MEASURED	FITTED
704	2.49	.187	0.0	3.00	0.0	.103	1.1362	1.1481
705	3.01	.226	0.0	3.00	0.0	.071	1.6779	1.6579
706	2.99	.224	0.0	3.00	0.0	.115	1.6353	1.6492
707	2.99	.224	0.0	3.00	0.0	.176	1.6487	1.6403
709	3.01	.226	5.0	3.00	0.0	.085	1.6595	1.6812
710	3.01	.226	-5.0	3.00	0.0	.091	1.6723	1.6622
711	3.01	.226	-10.0	3.00	0.0	.076	1.6706	1.6573
712	3.00	.225	-15.0	3.00	0.0	.057	1.6630	1.6511
713	3.00	.225	-20.0	3.00	0.0	.028	1.6587	1.6617
714	3.00	.225	-27.5	3.00	0.0	.006	1.6349	1.6482
715	3.01	.226	0.0	3.00	5.0	.088	1.7039	1.6868
716	3.00	.225	0.0	3.00	-5.0	.099	1.6033	1.6031
717	3.01	.225	0.0	3.00	-10.0	.099	1.5355	1.5296
718	3.01	.225	0.0	3.00	-15.0	.103	1.4291	1.4204
719	3.01	.226	0.0	3.00	-20.0	.104	1.2802	1.2950
720	3.01	.226	0.0	2.00	0.0	.090	1.6821	1.6808
721	3.02	.226	0.0	4.00	0.0	.100	1.6706	1.6666
722	3.00	.225	0.0	5.00	0.0	.094	1.6567	1.6540
723	3.01	.226	0.0	6.00	0.0	.089	1.6766	1.6826
724	2.53	.190	0.0	6.00	-20.0	.084	1.0008	0.9981
726	2.53	.189	5.0	8.00	-5.0	.256	1.0827	1.0719
728	2.99	.224	-5.0	3.00	-5.0	.165	1.5275	1.4956
730	2.99	.224	-5.0	6.00	5.0	.267	1.6874	1.6786
731	1.95	.147	0.0	5.00	-10.0	.249	0.5316	0.5199
732	2.49	.187	-27.5	3.00	-10.0	-.010	1.0945	1.0811
733	3.00	.225	-5.0	3.00	-5.0	.100	1.6100	1.5925
735	1.97	.148	-27.5	3.00	-10.0	.079	0.5842	0.5497
736	3.00	.225	-20.0	3.00	5.0	.094	1.6835	1.7064
737	3.00	.225	-27.5	6.00	-10.0	.141	1.0846	1.1791*
738	1.99	.149	-10.0	3.00	-15.0	.137	0.5573	0.5764
741	2.48	.186	0.0	3.00	-5.0	.132	1.0700	1.0876
743	2.53	.190	5.0	8.00	-10.0	.273	0.8927	0.9021
744	2.04	.153	-10.0	3.00	-10.0	.092	0.7127	0.7260
746	3.01	.226	-5.0	5.00	-20.0	.242	0.7445	0.7627
747	3.01	.226	-5.0	3.00	-5.0	.086	1.6238	1.6141
749	3.07	.230	-10.0	6.00	-5.0	.166	1.5289	1.5448
750	2.57	.193	5.0	5.00	0.0	.129	1.1936	1.2359
751	2.57	.193	-10.0	6.00	0.0	.067	1.2247	1.2510
752	2.07	.155	-27.5	3.00	-20.0	-.018	0.6933	0.6795
754	2.00	.150	5.0	6.00	0.0	.257	0.7431	0.7456
755	2.14	.160	-15.0	3.00	5.0	.120	0.7414	0.9100*
757	2.51	.188	0.0	8.00	-20.0	.339	0.2652	0.3050
758	2.51	.189	-15.0	6.00	-15.0	.062	1.0774	1.0594
759	2.51	.188	5.0	6.00	-10.0	.280	0.8342	0.8412
760	3.00	.225	-5.0	3.00	-5.0	.094	1.6167	1.5941
761	3.00	.225	-15.0	5.00	0.0	.257	1.4674	1.4714
763	2.51	.188	-20.0	7.00	0.0	.301	0.9215	0.9118
764	2.99	.224	0.0	5.00	-5.0	.103	1.5935	1.5951
765	2.99	.224	-5.0	5.00	-15.0	.183	1.2177	1.1701
766	2.02	.151	0.0	5.00	5.0	.372	-1.8533	0.8008*

TABLE A-21 (cont'd)

MEASURED AND FITTED SIDE FØRCE
BETA=20.DEG

RUN	CV	W	PHI	THETA	PSI	ZT	MEASURED	FITTED
769	2.51	.188	-10.0	8.00	-15.0	.234	0.7300	0.6811
771	3.00	.225	-10.0	2.00	5.0	.107	1.7051	1.7217
772	3.00	.225	-25.0	5.00	-10.0	.151	1.1175	1.1943 *
773	2.98	.224	-5.0	3.00	-5.0	.103	1.5817	1.5654
774	2.49	.186	-10.0	4.00	0.0	.251	1.0820	1.0624
775	2.98	.224	-10.0	6.00	-5.0	.176	1.4397	1.4467
777	2.49	.187	5.0	8.00	-10.0	.330	0.7696	0.7600
780	2.97	.223	-25.0	6.00	-5.0	.212	1.0557	1.2066 *
781	2.48	.186	-25.0	5.00	-20.0	.104	0.6311	0.6817

MEAN ERRØR= -0.0230
STANDARD DEVIATIØN= 0.0576

TABLE A-22

MEASURED AND FITTED RØLL MØMENT
BETA=10.DEG

RUN	CV	W	PHI	THETA	PSI	ZT	MEASURED	FITTED
3	4.00	.000	2.1	2.60	0.0	.043	-0.0005	0.0113*
5	4.00	.000	4.6	2.50	0.0	.035	-0.0135	-0.0002*
6	4.00	.000	7.2	2.60	0.0	.139	-0.1293	-0.0908
7	4.00	.000	9.7	2.50	0.0	.020	-0.0360	-0.0135*
8	4.00	.000	12.2	2.40	0.0	.011	-0.0521	-0.0083*
1	4.00	.000	4.7	2.50	5.0	.028	-0.0204	0.0010*
2	4.00	.000	0.1	2.60	0.0	.048	0.0107	0.0256*
9	4.00	.000	0.0	2.60	-5.0	.046	0.0163	0.0299*
10	4.00	.000	0.0	2.60	5.0	.046	-0.0066	0.0227*
11	4.00	.000	0.0	2.60	10.0	.048	-0.0145	0.0181*
12	4.00	.000	0.1	2.60	15.0	.047	-0.0288	0.0157*
13	4.00	.000	0.1	2.60	20.0	.046	-0.0392	0.0198*
14	4.00	.000	0.1	1.60	0.0	.062	0.0068	0.0260*
15	4.00	.000	0.0	3.70	0.0	.039	0.0101	0.0264*
16	4.00	.000	0.0	4.70	0.0	.036	0.0118	0.0264*
17	4.00	.000	0.0	5.70	0.0	.032	0.0122	0.0264*
18	4.00	.000	0.0	2.60	0.0	.038	0.0089	0.0264*
19	4.00	.000	0.1	2.60	0.0	.061	0.0088	0.0254*
21	4.00	.000	0.0	1.60	0.0	.048	0.0112	0.0264*
23	4.00	.000	0.0	1.60	0.0	.049	0.0078	0.0264*
24	4.00	.000	5.1	2.80	0.0	.039	0.0250	-0.0125*
25	4.00	.000	0.1	2.70	0.0	.101	0.0153	0.0250*
26	4.00	.000	0.1	2.70	0.0	.159	0.0185	0.0246
27	4.00	.000	0.1	2.70	0.0	.170	0.0255	0.0245
29	2.00	.000	0.0	2.60	0.0	.083	0.0062	0.0264*
30	3.00	.000	0.0	2.60	0.0	.057	0.0103	0.0264*
31	5.00	.000	0.0	2.60	0.0	.040	0.0075	0.0264*
32	6.00	.000	0.0	2.60	0.0	.035	0.0068	0.0264*
34	5.00	.000	2.4	2.40	-5.0	.076	-0.0231	0.0404*
36	2.00	.000	7.4	5.50	-5.0	.287	0.0094	0.1036*
37	3.00	.000	5.0	4.50	20.0	.058	-0.0629	-0.0295*
40	4.00	.000	12.4	4.50	20.0	.007	-0.1132	-0.2143*
41	3.00	.000	5.0	4.50	20.0	.031	-0.0158	-0.0017*
42	2.00	.000	10.0	4.50	20.0	.079	-0.0814	-0.0688
43	2.00	.000	10.0	4.50	20.0	.056	-0.0543	-0.0540
44	5.00	.000	7.4	4.50	20.0	.019	-0.0564	-0.0738
45	2.00	.000	12.4	4.50	20.0	.124	-0.1760	-0.1738
46	3.00	.000	10.0	3.50	20.0	.110	-0.2548	-0.2852
47	4.00	.000	10.0	2.50	20.0	.042	-0.1585	-0.2006
48	4.00	.000	0.1	6.50	20.0	.111	-0.0506	-0.0980*
49	6.00	.000	9.9	2.40	20.0	.034	-0.2907	-0.2419
50	4.00	.000	4.9	5.60	20.0	.243	-1.2447	-1.2156
51	3.00	.000	0.0	5.50	20.0	.059	-0.0093	0.0593*
52	4.00	.000	7.5	2.50	20.0	.056	-0.1524	-0.1586*
53	4.00	.000	2.4	3.50	20.0	.112	-0.1103	-0.2406*
54	3.00	.000	2.5	5.50	20.0	.033	-0.0151	0.0515*
55	5.00	.000	0.1	6.50	10.0	.045	-0.0186	0.0584*
56	2.00	.000	10.0	4.60	10.0	.030	-0.0203	-0.0177
57	4.00	.000	5.0	2.50	10.0	.036	-0.0226	-0.0190
58	3.00	.000	12.5	6.50	10.0	-.005	-0.0163	0.0599*

TABLE A-22 (cont'd)

MEASURED AND FITTED RØLL MØMENT
BETA=10.DEG

RUN	CV	W	PHI	THETA	PSI	ZT	MEASURED	FITTED	
59	4.00	.000	2.5	3.60	5.0	.040	-0.0080	0.0011	*
60	4.00	.000	2.5	3.60	5.0	.029	-0.0045	0.0101	*
61	4.00	.000	5.1	3.50	5.0	.043	0.0461	-0.0364	*
62	3.00	.000	0.0	2.50	5.0	.054	0.0028	0.0249	*
63	5.00	.000	2.5	2.50	5.0	.035	-0.0126	0.0107	*
64	3.00	.000	9.9	2.60	5.0	.013	-0.0129	-0.0304	*
65	4.00	.000	5.0	2.60	5.0	.039	-0.0132	-0.0167	
66	5.00	.000	5.0	6.60	5.0	.022	-0.0114	-0.0185	*
67	3.00	.000	9.9	6.60	5.0	.020	0.0463	0.0430	
68	6.00	.000	12.4	5.70	5.0	-.006	0.0388	-0.1395	*
69	3.00	.000	-5.1	6.60	5.0	.240	0.1183	0.0082	*
70	6.00	.000	-5.1	5.70	5.0	.016	0.0020	0.1894	*
71	6.00	.000	7.4	5.60	5.0	.012	-0.0114	-0.0852	*
72	4.00	.000	12.4	5.60	5.0	.102	-0.3540	-0.3600	
73	2.00	.000	0.0	5.60	5.0	.060	0.0088	0.0374	*
74	4.00	.000	2.4	3.60	5.0	.041	-0.0147	0.0014	*
76	5.00	.000	2.4	5.60	0.0	.026	0.0024	-0.0126	*
77	2.00	.000	4.9	5.70	0.0	.329	-0.0488	0.0117	*
78	6.00	.000	7.5	5.70	0.0	.015	-0.0148	-0.1339	*
79	3.00	.000	12.4	5.60	0.0	.112	-0.1807	-0.1662	
80	3.00	.000	12.4	5.60	0.0	.247	-0.2961	-0.2708	
81	4.00	.000	12.4	4.60	0.0	.117	-0.2882	-0.2776	
82	4.00	.000	4.9	6.60	0.0	.099	-0.1316	-0.0872	
83	3.00	.000	-5.1	6.60	0.0	.049	0.0574	0.0407	
84	3.00	.000	2.4	2.60	0.0	.044	0.0073	0.0135	*
85	4.00	.000	7.4	2.60	-5.0	.026	-0.0084	0.0001	*
87	2.00	.000	4.9	2.60	-5.0	.135	-0.0030	0.0242	*
88	4.00	.000	4.9	2.60	-5.0	.061	-0.0197	0.0020	*
89	2.00	.000	7.4	5.70	-5.0	.285	0.0117	0.0949	*
90	6.00	.000	7.5	6.70	-5.0	.014	0.0074	-0.1824	*
91	2.00	.000	0.0	4.60	-5.0	.119	0.0100	0.0264	*
92	5.00	.000	0.0	3.60	-5.0	.037	0.0231	0.0180	
93	6.00	.000	9.9	3.50	-5.0	.110	-0.1293	-0.1356	
94	6.00	.000	9.9	4.60	-5.0	.078	2138	-0.2255	
95	6.00	.000	10.0	5.60	-5.0	.002	0.0035	-0.1711	*
97	4.00	.000	9.9	5.60	-5.0	.037	-0.0218	-0.0620	*
98	5.00	.000	9.9	5.50	-5.0	.097	-0.2303	-0.2030	
99	3.00	.000	0.1	6.60	-5.0	.142	0.0204	0.0539	*
100	4.00	.000	4.9	6.60	-5.0	.034	-0.0102	-0.0244	*
101	4.00	.000	2.4	3.50	5.0	.039	-0.0117	0.0031	*
102	6.00	.000	9.9	2.50	0.0	.105	-0.2613	-0.2355	
103	3.00	.000	-5.1	2.50	10.0	.122	-0.0487	-0.0136	*
105	5.00	.000	10.0	3.50	10.0	.013	-0.0853	-0.1004	
106	4.00	.000	5.0	3.50	10.0	.045	-0.0547	-0.0472	
107	3.00	.000	7.4	6.50	10.0	.158	-0.2001	-0.2309	
108	4.00	.000	12.5	6.60	10.0	-.006	-0.0493	-0.0048	*
109	2.00	.000	-5.1	6.60	10.0	.057	0.0252	0.0236	
110	3.00	.000	2.4	6.50	10.0	.077	-0.0340	0.0177	*
111	3.00	.000	-5.1	5.60	10.0	.135	0.0177	0.0420	*
112	3.00	.000	12.5	5.60	10.0	.006	-0.0427	-0.0267	

TABLE A-22 (cont'd)

MEASURED AND FITTED RØLL MØMENT
BETA=10.DEG

RUN	CV	W	PHI	THETA	PSI	ZT	MEASURED	FITTED
113	4.00	.000	2.4	3.60	5.0	.038	-0.0078	0.0038*
114	4.00	.000	0.0	3.50	15.0	.042	-0.0289	0.0323*
115	4.00	.000	12.5	3.60	15.0	.001	-0.0693	-0.1578*
116	3.00	.000	7.4	2.60	15.0	.139	-0.1839	-0.2280
117	4.00	.000	7.4	2.50	15.0	.030	-0.0538	-0.0640
118	3.00	.000	5.0	2.50	15.0	.067	-0.0539	-0.0424
119	3.00	.000	2.4	2.50	15.0	.057	-0.0282	0.0022*
120	6.00	.000	2.4	2.50	15.0	.069	-0.1313	-0.1633
121	3.00	.000	0.0	2.60	15.0	.172	-0.2539	-0.2102
126	6.00	.000	4.9	2.50	20.0	.065	-0.2354	-0.2620
127	4.00	.000	5.0	2.60	20.0	.137	-0.2813	-0.4478*
128	6.00	.000	12.5	5.50	20.0	.022	-0.4283	-0.4042
129	2.00	.000	12.5	6.60	0.0	.057	-0.0470	0.0707*
130	5.00	.000	6.6	****	7.5	-.181	-0.0083	0.3988*
131	6.00	.000	-5.0	6.70	0.0	.022	0.0274	0.1518*
132	3.00	.000	9.9	3.60	0.0	.148	-0.1179	-0.1180
133	4.00	.000	7.4	3.60	5.0	.145	-0.1995	-0.2677
134	3.00	.000	9.9	3.70	5.0	.224	-0.2553	-0.2917
135	4.00	.000	2.4	3.60	5.0	.040	-0.0119	0.0024*
138	4.00	.000	-5.0	5.60	20.0	.221	-0.9830	-0.6555*
139	4.00	.000	-5.1	3.60	5.0	.044	0.0463	0.0731*
1	1.97	.049	0.0	3.00	0.0	.057	-0.1892	-0.1983
2	1.98	.050	0.0	3.00	0.0	.058	-0.1902	-0.2004
3	3.15	.079	0.0	3.00	0.0	.029	-0.5120	-0.5110
4	4.01	.100	0.0	3.00	0.0	.022	-0.8395	-0.8275
6	5.30	.133	0.0	3.00	0.0	.033	-1.4630	-1.4653
8	6.00	.150	0.0	3.00	0.0	.032	-1.8879	-1.8949
10	3.01	.075	-2.5	3.00	0.0	.042	-0.4422	-0.4498
9	3.12	.078	5.0	3.00	0.0	.038	-0.5162	-0.5306
11	3.02	.076	-5.0	3.00	0.0	.037	-0.4363	-0.4392
12	2.95	.074	-7.5	3.00	0.0	.033	-0.4090	-0.4044
13	2.98	.075	-10.0	3.00	0.0	.032	-0.4029	-0.3977
14	2.96	.074	-12.5	3.00	0.0	.026	-0.3791	-0.3802
15	2.95	.074	0.0	2.00	0.0	.064	-0.4414	-0.4499
16	2.99	.075	0.0	4.00	0.0	.047	-0.4466	-0.4525
19	2.72	.068	0.0	5.00	0.0	.041	-0.3744	-0.3690
20	2.68	.067	0.0	5.00	0.0	.041	-0.3602	-0.3578
21	3.14	.079	0.0	6.00	0.0	.033	-0.4997	-0.4924
22	2.01	.050	-7.5	6.00	0.0	.089	-0.1379	-0.1667
23	2.98	.074	0.0	3.00	0.0	.025	-0.4511	-0.4567
24	2.97	.074	0.0	3.00	0.0	.072	-0.4584	-0.4471
25	2.46	.062	0.0	3.00	0.0	.151	-0.3081	-0.2943
26	3.46	.087	0.0	3.00	0.0	.103	-0.6298	-0.6084
27	2.96	.074	0.0	3.00	0.0	.127	-0.4535	-0.4365
28	2.93	.073	0.0	3.00	0.0	.181	-0.4456	-0.4209
30	4.49	.112	0.0	3.00	0.0	.193	-1.0609	-1.0338
31	5.03	.126	0.0	3.00	0.0	.115	-1.3458	-1.3151
32	3.15	.079	0.0	3.00	-5.0	.055	-0.4974	-0.5009
34	3.07	.077	-2.5	3.00	-5.0	.054	-0.4579	-0.4575
35	5.82	.146	0.0	3.00	-5.0	.049	-1.7708	-1.7618

TABLE A-22 (cont'd)

MEASURED AND FITTED RØLL MØMENT
BETA=10.DEG

RUN	CV	W	PHI	THETA	PSI	ZT	MEASURED	FITTED
36	5.77	.144	-12.5	6.00	-5.0	.008	-1.5408	-1.5122
37	4.91	.123	5.0	2.00	-5.0	.040	-1.2770	-1.2616
38	2.87	.072	-10.0	4.00	-5.0	.157	-0.2127	-0.1688
39	5.96	.149	-12.5	5.00	-5.0	.045	-1.4310	-1.4390
40	3.00	.075	0.0	3.00	-10.0	.135	-0.4350	-0.3485
41	6.02	.150	-7.5	5.00	-10.0	.025	-1.7312	-1.7014
42	2.95	.074	-2.5	2.00	-10.0	.057	-0.4102	-0.4214
43	5.21	.130	-5.0	2.00	-10.0	.022	-1.3393	-1.3694
46	3.09	.077	-5.0	2.00	-10.0	.092	-0.4078	-0.3942
47	3.14	.079	-2.5	3.00	-5.0	.036	-0.4814	-0.4902
48	3.09	.077	0.0	3.00	-15.0	.041	-0.4510	-0.4677
56	5.23	.131	-5.0	3.00	-15.0	.060	-1.1716	-1.1244
57	5.19	.130	-5.0	2.00	-15.0	.027	-1.2652	-1.2838
58	5.12	.128	-12.5	5.00	-15.0	.027	-0.8540	-0.9106
59	3.05	.076	0.0	3.00	-20.0	.048	-0.4253	-0.4372
60	4.17	.104	-12.5	6.00	-20.0	-.007	-0.6842	-0.6313
62	5.18	.129	5.0	3.00	-20.0	.022	-1.3112	-1.3115
65	4.10	.102	-2.5	6.00	-20.0	.033	-0.7424	-0.7849
66	6.15	.154	-10.0	5.00	-20.0	.004	-1.6047	-1.5955
67	2.11	.053	-7.5	2.00	-20.0	.046	-0.1321	-0.1553
69	4.05	.101	-5.0	5.00	-20.0	.047	-0.6447	-0.6521
70	3.01	.075	-7.5	2.00	-20.0	.076	-0.2460	-0.2841
71	3.00	.075	0.0	3.00	5.0	.038	-0.4626	-0.4569
72	6.08	.152	-5.0	3.00	5.0	.057	-1.8725	-1.8547
74	5.05	.126	-10.0	3.00	5.0	.108	-1.2652	-1.2122
75	6.03	.151	-2.5	5.00	5.0	.047	-1.8458	-1.8275
76	5.05	.126	-2.5	2.00	5.0	.038	-1.3336	-1.2952
77	5.05	.126	-10.0	5.00	5.0	.031	-1.1725	-1.1550
78	4.02	.101	-7.5	5.00	5.0	.008	-0.8160	-0.7781
79	2.04	.051	-10.0	3.00	5.0	.016	-0.1891	-0.1893
80	5.33	.133	-2.5	3.00	0.0	.061	-1.4868	-1.4388
82	3.87	.097	-2.5	2.00	0.0	.099	-0.7648	-0.7448
83	3.02	.075	-2.5	3.00	-5.0	.038	-0.4465	-0.4509
418	1.85	.069	0.0	3.00	0.0	.060	-0.2500	-0.2713
419	2.96	.111	0.0	3.00	0.0	.044	-0.6671	-0.6813
420	3.95	.148	0.0	3.00	0.0	.033	-1.20[illegible]6	-1.2071
421	5.02	.188	0.0	3.00	0.0	.025	-1.9660	-1.9639
422	6.09	.228	0.0	3.00	0.0	.022	-2.9043	-2.9175
423	3.86	.145	0.0	3.00	0.0	.028	-1.1470	-1.1560
424	3.91	.146	0.0	3.00	0.0	.045	-1.1747	-1.1811
425	3.96	.148	0.0	3.00	0.0	.067	-1.2348	-1.2111
426	4.03	.151	0.0	3.00	0.0	.117	-1.2598	-1.2507
427	4.01	.150	0.0	3.00	0.0	.158	-1.2540	-1.2338
428	3.99	.150	5.0	3.00	0.0	.027	-1.2689	-1.2722
429	4.02	.151	-2.5	3.00	0.0	.031	-1.2284	-1.2308
430	3.99	.150	-5.0	3.00	0.0	.027	-1.1890	-1.2006
431	4.01	.150	-7.5	3.00	0.0	.017	-1.1996	-1.2033
432	4.00	.150	-10.0	3.00	0.0	.011	-1.1762	-1.1938
433	4.01	.150	-12.5	3.00	0.0	.006	-1.1648	-1.1922
434	3.99	.150	-12.5	3.00	5.0	.007	-1.1837	-1.2089

TABLE A-22 (cont'd)

MEASURED AND FITTED RØLL MØMENT
BETA=10.DEG

RUN	CV	W	PHI	THETA	PSI	ZT	MEASURED	FITTED
435	4.00	.150	-12.5	3.00	-5.0	-.002	-1.1570	-1.1572
436	4.02	.151	-12.5	3.00	-10.0	-.004	-1.1268	-1.1034
438	3.97	.149	0.0	3.00	5.0	.032	-1.2237	-1.2068
440	4.01	.150	0.0	3.00	-5.0	.035	-1.2242	-1.2388
441	4.00	.150	0.0	3.00	-10.0	.036	-1.1901	-1.2095
443	3.98	.149	0.0	3.00	-15.0	.040	-1.1457	-1.1523
444	3.98	.149	0.0	3.00	-20.0	.035	-1.1079	-1.1071
445	3.98	.149	0.0	2.00	0.0	.036	-1.2294	-1.2372
446	3.98	.149	0.0	4.00	0.0	.032	-1.2214	-1.2232
448	4.02	.151	0.0	5.00	0.0	.025	-1.2347	-1.2441
449	4.03	.151	0.0	6.00	0.0	.024	-1.2329	-1.2486
451	1.81	.068	-10.0	4.00	5.0	.132	-0.2016	-0.1933
452	4.01	.150	-2.5	3.00	-5.0	.043	-1.2018	-1.2110
455	4.91	.184	5.0	4.00	-20.0	.131	-0.8183	-1.2862*
456	4.90	.184	-7.5	4.00	5.0	.099	-1.6857	-1.7391
457	2.92	.109	-2.5	3.00	-5.0	.043	-0.6231	-0.6452
458	4.00	.150	-7.5	6.00	0.0	.010	-1.1687	-1.1907
459	5.96	.224	0.0	2.00	-5.0	.025	-2.7643	-2.8021
460	5.01	.188	-10.0	5.00	0.0	.045	-1.7040	-1.7440
463	4.02	.151	-12.5	3.00	5.0	.110	-1.1652	-1.1209
465	5.97	.224	0.0	2.00	5.0	.090	-2.8304	-2.8752
466	5.97	.224	-12.5	5.00	-20.0	.011	-2.0552	-2.0725
467	4.00	.150	-7.5	6.00	0.0	.011	-1.2020	-1.1906
469	5.05	.189	5.0	4.00	-10.0	.083	-1.9184	-1.9358
470	3.01	.113	-2.5	3.00	0.0	.131	-0.6531	-0.6580
471	2.99	.112	-2.5	3.00	-5.0	.047	-0.6569	-0.6758
473	4.96	.186	-5.0	6.00	-20.0	.024	-1.6603	-1.6597
475	4.97	.186	-2.5	2.00	-20.0	.086	-1.6109	-1.4008*
476	4.97	.186	5.0	3.00	0.0	.031	-1.9797	-1.9725
483	1.98	.074	-10.0	6.00	-5.0	.168	-0.1452	-0.1607
484	2.91	.109	-2.5	2.00	0.0	.089	-0.6249	-0.6475
485	3.01	.113	0.0	6.00	-20.0	.133	-0.5100	-0.5183
487	3.93	.148	-10.0	2.00	-5.0	.097	-0.9742	-1.0089
488	3.00	.113	-2.5	3.00	-5.0	.043	-0.6670	-0.6822
489	4.13	.155	-5.0	2.00	5.0	.112	-1.3205	-1.3314
490	6.08	.228	-5.0	2.00	5.0	.081	-2.9033	-2.8795
491	4.10	.154	-7.5	3.00	-5.0	.075	-1.1399	-1.1354
492	4.04	.152	0.0	3.00	0.0	.028	-1.2725	-1.2675
494	3.18	.119	-2.5	4.00	-5.0	.140	-0.7164	-0.6578
496	6.07	.228	5.0	5.00	-15.0	.074	-2.7324	-2.7344
499	6.05	.227	-10.0	5.00	-15.0	.001	-2.6055	-2.5532
500	4.08	.153	-5.0	6.00	-5.0	.015	-1.2350	-1.2517
502	3.09	.116	-12.5	4.00	0.0	.105	-0.5342	-0.5398
503	3.10	.116	-2.5	4.00	-15.0	.053	-0.6634	-0.6768
505	3.03	.114	-2.5	5.00	5.0	.161	-0.6466	-0.6878
506	3.02	.113	-2.5	3.00	-5.0	.041	-0.6727	-0.6904
507	3.01	.113	-5.0	2.00	5.0	.092	-0.6732	-0.6951
508	2.99	.112	-5.0	5.00	-10.0	.104	-0.5682	-0.5451
512	2.01	.075	-7.5	6.00	-10.0	.220	-0.0949	-0.0879
513	5.15	.193	-10.0	5.00	-10.0	.042	-1.6610	-1.7256

TABLE A-22 (cont'd)

MEASURED AND FITTED RØLL MØMENT
BETA=10.DEG

RUN	CV	W	PHI	THETA	PSI	ZT	MEASURED	FITTED
514	5.10	.191	-12.5	2.00	-10.0	-.016	-1.9220	-1.9440
795	3.00	.225	0.0	3.00	0.0	.055	-1.3912	-1.3910
796	2.99	.224	5.0	3.00	0.0	.047	-1.4128	-1.4302
797	3.01	.226	-2.5	3.00	0.0	.056	-1.3816	-1.3775
798	3.00	.225	-5.0	3.00	0.0	.051	-1.3584	-1.3507
799	3.01	.226	-7.5	3.00	0.0	.046	-1.3524	-1.3433
800	3.00	.225	-10.0	3.00	0.0	.039	-1.3279	-1.3174
801	3.00	.225	-12.5	3.00	0.0	.033	-1.3131	-1.3025
802	2.99	.224	0.0	3.00	5.0	.054	-1.3869	-1.3755
803	2.99	.224	0.0	3.00	-5.0	.068	-1.3810	-1.3683
804	2.98	.223	0.0	3.00	-10.0	.072	-1.3508	-1.3251
805	2.99	.224	0.0	3.00	-15.0	.075	-1.3220	-1.2878
806	3.00	.225	0.0	3.00	-20.0	.069	-1.2874	-1.2435
807	3.00	.225	0.0	2.00	0.0	.067	-1.3993	-1.4075
808	2.97	.223	0.0	4.00	0.0	.058	-1.3577	-1.3512
809	3.00	.225	0.0	5.00	0.0	.053	-1.3759	-1.3607
810	2.99	.224	0.0	6.00	0.0	.056	-1.3518	-1.3370
811	3.00	.225	0.0	3.00	0.0	.051	-1.3888	-1.3946
812	3.00	.225	0.0	3.00	0.0	.082	-1.3944	-1.3839
813	3.00	.225	0.0	3.00	0.0	.130	-1.3822	-1.3619
815	2.01	.151	0.0	3.00	0.0	.104	-0.6103	-0.6393
816	2.51	.188	-2.5	3.00	0.0	.069	-0.9757	-0.9701
817	3.01	.226	0.0	6.00	-20.0	.066	-1.2694	-1.2600
818	3.02	.226	5.0	6.00	-5.0	.175	-1.3775	-1.3723
819	3.02	[illegible]6	-2.5	6.00	5.0	.211	-1.3207	-1.3654
820	2.03	[illegible]2	0.0	4.00	-10.0	.205	-0.4669	-0.4852
821	3.01	[illegible]6	-12.5	3.00	-10.0	.017	-1.2884	-1.2368
822	3.01	[illegible]	-2.5	3.00	-5.0	.065	-1.3736	-1.3620
823	2.02	.152	-12.5	3.00	-10.0	.093	-0.4781	-0.4942
824	2.52	.189	-10.0	3.00	5.0	.111	-0.9233	-0.9085
825	2.01	.150	-5.0	3.00	-15.0	.112	-0.5192	-0.5548
826	2.48	.186	-12.5	6.00	-10.0	.190	-0.5713	-0.5055
827	2.48	.1[illegible]	-12.5	5.00	5.0	.281	-0.8617	-0.8675
828	2.99	.22[illegible]	0.0	3.00	-5.0	.084	-1.3765	-1.3541
829	1.99	.149	5.0	6.00	-10.0	.287	-0.3664	-0.3276
830	2.00	.150	-5.0	3.00	-10.0	.076	-0.5631	-0.6014
831	2.50	.187	-2.5	5.00	-20.0	.248	-0.2660	-0.3171
832	2.99	.224	-2.5	3.00	-5.0	.065	-1.3486	-1.3475
833	1.96	.147	-5.0	6.00	-5.0	.263	-0.4035	-0.3872
834	2.95	.221	5.0	5.00	0.0	.063	-1.3944	-1.3692
835	2.96	.222	-5.0	6.00	0.0	.034	-1.3071	-1.3026
836	1.98	.148	-12.5	3.00	-20.0	.019	-0.4733	-0.4363
839	2.06	.155	5.0	4.00	0.0	.192	-0.6656	-0.6531
840	2.03	.153	-7.5	3.00	5.0	.088	-0.6006	-0.6132
841	2.98	.223	0.0	5.00	-20.0	.219	-0.4844	-0.6988*
842	2.99	.224	-7.5	6.00	-15.0	.031	-1.2117	-1.2377
845	2.98	.223	5.0	6.00	-10.0	.174	-1.1728	-1.2460
846	3.01	.226	-2.5	3.00	-5.0	.053	-1.3726	-1.3746
847	2.54	.190	-7.5	5.00	0.0	.242	-0.7936	-0.7967
848	3.01	.226	-10.0	5.00	0.0	.204	-1.0560	-1.0998

TABLE A-22 (cont'd)

MEASURED AND FITTED RØLL MØMENT
BETA=10.DEG

RUN	CV	W	PHI	THETA	PSI	ZT	MEASURED	FITTED
849	2.55	.191	0.0	5.00	-5.0	.046	-0.9819	-0.9953
850	2.54	.191	-2.5	4.00	-15.0	.180	-0.6555	-0.7071
851	2.08	.156	0.0	5.00	5.0	.038	-0.6436	-0.6575
852	2.53	.190	5.0	6.00	-20.0	.212	-0.3049	-0.6224*
853	2.05	.154	-5.0	8.00	-15.0	.288	-0.2283	-0.1920
855	3.01	.226	-5.0	2.00	5.0	.074	-1.3731	-1.3868
856	2.53	.190	-12.5	4.00	-10.0	.182	-0.5732	-0.5788
857	3.00	.225	-2.5	3.00	-5.0	.049	-1.3649	-1.3698
858	2.99	.224	-5.0	4.00	0.0	.157	-1.2857	-1.2440
859	2.53	.190	-5.0	6.00	-5.0	.169	-0.8658	-0.8102
861	2.54	.190	-12.5	4.00	-5.0	.209	-0.6193	-0.6529
862	2.97	.223	-12.5	5.00	-20.0	.057	-0.9045	-0.9459
863	3.00	.225	-5.0	4.00	-5.0	.026	-1.3508	-1.3477

MEAN ERRØR= 0.0276
STANDARD DEVIATIØN= 0.0891

TABLE A-23

MEASURED AND FITTED RØLL MØMENT
BETA=15.DEG

RUN	CV	W	PHI	THETA	PSI	ZT	MEASURED	FITTED
141	4.00	.000	5.0	3.60	5.0	.050	-0.0222	0.0047*
142	4.00	.000	-0.3	2.60	0.0	.063	0.0066	0.0588*
143	3.00	.000	4.7	2.60	0.0	.053	0.0034	0.0539*
144	6.00	.000	14.8	3.00	0.0	.149	-0.3737	-0.3867
145	4.00	.000	4.8	3.60	0.0	.050	0.0017	0.0360*
146	4.00	.000	-5.2	3.60	0.0	.050	0.0168	0.0808*
147	4.00	.000	-0.3	3.60	0.0	.058	0.0104	0.0591*
148	4.00	.000	-0.3	3.60	0.0	.061	0.0117	0.0592*
149	4.00	.000	-0.3	3.60	0.0	.076	0.0110	0.0598*
150	4.00	.000	-0.3	3.60	0.0	.113	0.0133	0.0612*
151	4.00	.000	-0.3	3.60	0.0	.163	0.0279	0.0626*
152	4.00	.000	-0.3	3.70	0.0	.216	0.0331	0.0638*
153	2.00	.000	-2.1	3.60	0.0	.114	0.0120	0.0638*
154	3.00	.000	-0.3	3.60	0.0	.077	0.0096	0.0585*
155	5.00	.000	-0.3	3.60	0.0	.051	0.0063	0.0605*
156	6.00	.000	-0.3	3.60	0.0	.043	0.0067	0.0621*
157	4.00	.000	9.8	3.60	0.0	.035	-0.0166	0.0332*
158	4.00	.000	14.7	3.60	0.0	.014	-0.0313	0.0621*
159	3.00	.000	14.7	3.60	0.0	.169	-0.1406	-0.1135
160	4.00	.000	19.8	3.60	0.0	-.005	-0.0491	0.1134*
161	4.00	.000	19.8	4.60	0.0	.155	-0.3332	-0.3367
162	4.00	.000	19.7	4.60	0.0	.162	-0.3336	-0.3488
163	4.00	.000	-0.3	4.60	0.0	.058	0.0121	0.0598*
164	4.00	.000	-0.3	5.60	0.0	.056	0.0161	0.0604*
165	2.00	.000	4.7	5.60	0.0	.371	-0.0361	0.0248*
166	6.00	.000	9.7	5.60	0.0	.029	-0.0065	-0.1696*
167	3.00	.000	19.7	5.60	0.0	.161	-0.2243	-0.2295
168	3.00	.000	19.7	5.60	0.0	.280	-0.3484	-0.3483
169	2.00	.000	19.7	6.60	0.0	.067	-0.0597	0.0638*
170	5.00	.000	9.7	6.60	0.0	.030	-0.0061	-0.1140*
171	4.00	.000	9.7	6.60	0.0	.147	-0.2420	-0.1837
172	3.00	.000	-5.3	6.60	0.0	.082	0.0426	0.0967*
173	4.00	.000	-0.3	6.60	0.0	.055	0.0168	0.0612*
174	6.00	.000	-5.2	6.60	0.0	.039	0.0210	0.2228*
175	4.00	.000	4.7	3.60	5.0	.061	-0.0216	-0.0110*
185	4.00	.000	4.7	3.60	5.0	.046	-0.0085	0.0119*
186	4.00	.000	-0.3	3.60	5.0	.065	-0.0140	0.0204*
187	3.00	.000	-5.3	3.60	5.0	.119	0.0211	0.0407*
189	5.00	.000	-0.3	2.50	5.0	.063	-0.0261	-0.0056*
191	4.00	.000	9.8	3.60	5.0	.173	-0.2818	-0.2784
192	4.00	.000	9.7	3.60	5.0	.177	-0.2846	-0.2811
193	3.00	.000	14.7	3.70	5.0	.250	-0.3779	-0.3228
194	3.00	.000	14.7	3.60	5.0	.017	-0.0165	0.0604*
195	3.00	.000	14.7	1.60	5.0	.048	-0.0287	-0.0144*
196	6.00	.000	-5.2	5.60	5.0	.035	-0.0028	0.2394*
197	6.00	.000	9.7	5.60	5.0	.026	-0.0172	-0.1202*
198	6.00	.000	19.8	5.60	5.0	-.016	-0.0702	-0.2124*
199	2.00	.000	-0.3	5.60	5.0	.101	0.0014	0.0419*
200	2.00	.000	-5.3	5.60	5.0	.257	0.0216	0.0434*
201	4.00	.000	19.8	5.60	5.0	.139	-0.5776	-0.5421

TABLE A-23 (cont'd)

MEASURED AND FITTED RØLL MØMENT
BETA=15.DEG

RUN	CV	W	PHI	THETA	PSI	ZT	MEASURED	FITTED
202	5.00	.000	14.7	6.60	5.0	.010	-0.0266	-0.1591*
203	5.00	.000	4.7	6.60	5.0	.036	-0.0191	-0.0131
204	5.00	.000	4.8	6.60	5.0	.037	-0.0167	-0.0167
205	3.00	.000	-5.3	6.60	5.0	.279	0.0900	0.0485*
206	4.00	.000	4.7	3.60	5.0	.055	-0.0204	-0.0010*
207	4.00	.000	-0.3	3.60	-5.0	.063	0.0319	0.0961*
208	6.00	.000	14.7	3.60	-5.0	.155	0.0224	-0.1563*
210	5.00	.000	-0.3	2.50	-5.0	.103	0.0745	0.1799*
211	4.00	.000	4.7	2.60	-5.0	.094	0.0119	0.1009*
212	2.00	.000	4.7	2.60	-5.0	.162	0.0111	0.0639*
213	4.00	.000	9.8	2.60	-5.0	.043	-0.0000	0.0922*
214	2.00	.000	-0.3	4.60	-5.0	.170	0.0231	0.0920*
215	6.00	.000	14.8	4.60	-5.0	.126	-0.1293	-0.2562*
216	5.00	.000	14.7	5.50	-5.0	.150	-0.1616	-0.2130
218	3.00	.000	9.7	5.60	-5.0	.242	-0.0466	0.0056*
219	4.00	.000	9.7	5.60	-5.0	.045	-0.0312	0.0200*
220	6.00	.000	14.8	5.60	-5.0	.007	-0.0153	-0.2264*
221	6.00	.000	14.8	6.60	-5.0	.005	-0.0179	-0.3220*
222	4.00	.000	9.7	6.60	-5.0	.044	-0.0237	-0.0051*
223	3.00	.000	19.7	6.60	10.0	-.009	-0.0398	0.0391
224	4.00	.000	19.7	6.60	10.0	-.014	-0.0757	-0.0696
225	2.00	.000	-5.3	6.60	10.0	.104	0.0138	0.0180
226	3.00	.000	4.7	6.60	10.0	.117	-0.0939	-0.0963
227	5.00	.000	-0.3	6.50	10.0	.070	-0.0604	0.0389*
228	3.00	.000	14.8	6.60	10.0	.191	-0.4654	-0.4546
231	3.00	.000	19.8	4.60	10.0	.179	-0.5706	-0.5187
232	5.00	.000	14.7	4.50	10.0	.035	-0.1954	-0.2190
233	2.00	.000	14.7	4.60	10.0	.037	-0.0193	0.0577*
234	4.00	.000	4.8	3.60	5.0	.054	-0.0161	-0.0015*
235	5.00	.000	4.8	3.50	10.0	.118	-0.2447	-0.2741
238	3.00	.000	9.7	3.60	10.0	.240	-0.3186	-0.3382
239	4.00	.000	9.8	3.60	10.0	.059	-0.0887	-0.1083
240	5.00	.000	8.6	3.50	10.0	.020	-0.1001	-0.0009*
241	3.00	.000	4.8	3.60	10.0	.131	-0.0198	-0.0984*
242	4.00	.000	-0.3	3.60	10.0	.064	-0.0387	-0.0132*
243	4.00	.000	9.7	2.60	10.0	.050	-0.0555	-0.0759
244	3.00	.000	19.7	5.60	10.0	-.003	-0.0550	0.0324*
245	3.00	.000	-4.9	5.50	10.0	.180	-0.0162	-0.0375*
246	5.00	.000	-5.2	5.50	15.0	.077	-0.0287	0.0317*
247	3.00	.000	-0.3	5.60	15.0	.165	-0.0844	-0.1405*
248	5.00	.000	14.8	5.50	15.0	.029	-0.1994	-0.2382
249	6.00	.000	14.7	5.60	15.0	.016	-0.1216	-0.1630
250	5.00	.000	-0.3	5.50	15.0	.044	-0.0612	0.0879*
251	2.00	.000	4.7	6.60	15.0	.091	-0.0261	-0.0021*
252	6.00	.000	3.9	6.60	15.0	.026	-0.0464	0.2493*
253	3.00	.000	19.7	6.60	15.0	.018	-0.1188	-0.1324
254	4.00	.000	-5.3	6.60	15.0	.150	-0.0921	-0.1061*
255	6.00	.000	-5.3	4.60	15.0	.067	-0.0669	0.1141
256	3.00	.000	14.7	4.60	15.0	.094	-0.2418	-0.2475
257	5.00	.000	9.8	4.50	15.0	.077	-0.3074	-0.3082

TABLE A-23 (cont'd)

MEASURED AND FITTED RØLL MØMENT
BETA=15.DEG

RUN	CV	W	PHI	THETA	PSI	ZT	MEASURED	FITTED
258	3.00	.000	4.7	4.60	15.0	.266	-0.3844	-0.3849
260	4.00	.000	-0.3	4.60	15.0	.230	-0.4266	-0.4256
261	4.00	.000	-0.3	4.60	15.0	.049	-0.0373	0.0127*
262	3.00	.000	9.8	4.60	15.0	.056	-0.0476	-0.0460
263	6.00	.000	9.8	4.60	15.0	.033	-0.0795	-0.0520
264	4.00	.000	-0.3	3.60	15.0	.069	-0.0595	-0.0521
265	6.00	.000	19.8	3.60	15.0	-.009	-0.1678	-0.1724
266	4.00	.000	9.8	2.60	15.0	.053	-0.0775	-0.1238*
267	3.00	.000	9.8	2.60	15.0	.095	-0.1295	-0.1420
268	3.00	.000	4.7	2.60	15.0	.089	-0.0708	-0.0610
270	6.00	.000	4.8	2.50	15.0	.099	-0.3924	-0.4023
271	6.00	.000	4.8	2.50	15.0	.097	-0.3845	-0.3897
275	4.00	.000	9.8	2.50	15.0	.117	-0.3418	-0.3688
276	4.00	.000	4.8	3.60	5.0	.058	-0.0152	-0.0066*
277	4.00	.000	-0.3	3.60	20.0	.068	-0.0816	-0.0682
277	3.00	.000	14.7	3.50	20.0	.049	-0.1224	-0.1262
279	4.00	.000	4.8	3.50	20.0	.133	-0.3046	-0.3677
280	6.00	.000	4.8	2.50	20.0	.100	-0.5232	-0.4822
281	5.00	.000	4.8	2.50	20.0	.168	-0.7487	-0.7763
282	6.00	.000	14.7	2.50	20.0	.028	-0.2815	-0.2627
283	4.00	.000	14.7	2.50	20.0	.034	-0.1431	-0.1825
286	4.00	.000	14.7	2.50	20.0	.020	-0.0675	-0.1046*
286	3.00	.000	9.7	4.50	20.0	.043	-0.0289	-0.0143*
287	3.00	.000	9.7	4.50	20.0	.075	-0.1144	-0.1156
288	4.00	.000	19.8	4.50	20.0	-.004	-0.1257	-0.1477
289	2.00	.000	14.7	4.50	20.0	.098	-0.1240	-0.1143
290	2.00	.000	19.8	4.60	20.0	.136	-0.3144	-0.3131
294	3.00	.000	-0.3	5.50	20.0	.090	-0.0666	-0.0531
295	3.00	.000	-0.3	5.60	20.0	.056	-0.0369	0.0094*
296	4.00	.000	-0.3	6.60	20.0	.046	-0.0406	0.0331*
297	4.00	.000	4.7	3.60	5.0	.059	-0.0228	-0.0079*
298	4.00	.000	4.8	1.60	5.0	.082	-0.0428	-0.0443
299	4.00	.000	14.7	1.60	5.0	.038	-0.0423	-0.0375
300	5.00	.000	-0.3	1.50	15.0	.051	-0.1718	-0.1190
109	2.35	.059	0.0	3.00	0.0	.069	-0.2630	-0.2484
110	2.92	.073	0.0	3.00	0.0	.060	-0.4176	-0.4090
111	3.88	.097	0.0	3.00	0.0	.052	-0.7520	-0.7492
112	4.95	.124	0.0	3.00	0.0	.045	-1.2337	-1.2436
113	6.02	.150	0.0	3.00	0.0	.037	-1.8466	-1.8469
114	2.87	.072	0.0	3.00	0.0	.049	-0.3991	-0.3913
115	3.02	.076	0.0	3.00	0.0	.081	-0.4482	-0.4411
116	3.01	.075	0.0	3.00	0.0	.155	-0.4531	-0.4331
117	2.82	.071	0.0	3.00	0.0	.156	-0.3996	-0.3772
119	4.03	.101	0.0	3.00	0.0	.181	-0.8358	-0.7957
120	3.03	.076	5.0	3.00	0.0	.059	-0.4747	-0.4507
121	3.02	.075	-5.0	3.00	0.0	.056	-0.4305	-0.4295
122	2.87	.072	-10.0	3.00	0.0	.052	-0.3710	-0.3744
123	2.89	.072	-15.0	3.00	0.0	.046	-0.3353	-0.3680*
124	3.05	.076	-20.0	3.00	0.0	.040	-0.1772	-0.3910
125	3.06	.076	0.0	3.00	5.0	.058	-0.4730	-0.4643

TABLE A-23 (cont'd)

MEASURED AND FITTED RØLL MØMENT
BETA=15. DEG

RUN	CV	W	PHI	THETA	PSI	ZT	MEASURED	FITTED	
127	3.01	.075	0.0	3.00	-10.0	.067	-0.4028	-0.3895	
128	3.03	.076	0.0	3.00	-15.0	.066	-0.3782	-0.3674	
129	3.01	.075	0.0	3.00	-20.0	.055	-0.3534	-0.3642	
130	2.99	.075	0.0	2.00	0.0	.066	-0.4409	-0.4346	
131	3.02	.075	0.0	4.00	0.0	.063	-0.4453	-0.4358	
132	3.06	.076	0.0	5.00	0.0	.054	-0.4540	-0.4454	
133	3.06	.076	0.0	6.00	0.0	.057	-0.4579	-0.4440	
136	4.04	.101	-5.0	3.00	0.0	.095	-0.7626	-0.7692	
137	6.09	.152	-15.0	5.00	-10.0	.003	-1.6974	-1.5350	*
138	6.05	.151	-20.0	6.00	-5.0	-.018	-1.5981	-1.3809	*
139	4.02	.100	-20.0	6.00	-20.0	-.022	-0.5836	-0.4548	*
140	5.00	.125	5.0	3.00	-20.0	.022	-1.1186	-1.1372	
141	4.99	.125	5.0	3.00	-20.0	.021	-1.1117	-1.1328	
142	2.91	.073	-5.0	3.00	-5.0	.056	-0.3852	-0.3775	
143	1.65	.041	-10.0	6.00	0.0	.153	-0.0644	-0.0603	
144	3.79	.095	-10.0	3.00	-20.0	.093	-0.2053	-0.2487	
145	4.76	.119	5.0	2.00	-5.0	.045	-1.1368	-1.1201	
147	3.87	.097	-5.0	6.00	-20.0	.026	0.7379	-0.6266	*
148	5.86	.146	-10.0	3.00	5.0	.097	-1.6458	-1.6634	
150	3.94	.098	-15.0	4.00	-5.0	.093	-0.4461	-0.4442	
151	2.95	.074	-10.0	2.00	-10.0	.105	-0.2535	-0.2207	
154	4.78	.120	-5.0	3.00	-5.0	.032	-1.1025	-1.1006	
156	3.00	.075	0.0	2.00	-10.0	.053	-0.4025	-0.4009	
157	3.02	.076	-5.0	6.00	-15.0	.050	-0.3489	-0.3415	
158	3.99	.100	-5.0	6.00	-15.0	.040	-0.6539	-0.6504	
160	2.40	.060	-10.0	2.00	-20.0	.044	-0.1593	-0.1969	
161	6.18	.154	5.0	3.00	-20.0	.044	-1.7892	-1.7433	
162	6.21	.155	5.0	3.00	-20.0	.040	-1.8044	-1.7884	
163	6.18	.154	-10.0	2.00	-15.0	.004	-1.7846	-1.7819	
164	4.38	.110	-10.0	5.00	-20.0	.041	-0.6158	-0.6299	
165	3.23	.081	-10.0	2.00	-20.0	.082	-0.1216	-0.2022	*
166	2.15	.054	-10.0	4.00	-15.0	.037	-0.1573	-0.1850	
167	2.64	.066	-5.0	3.00	-5.0	.065	-0.3018	-0.2979	
168	5.65	.141	-5.0	5.00	5.0	.073	-1.5219	-1.4744	
169	4.72	.118	-5.0	2.00	-10.0	.052	-0.9944	-0.9631	
170	5.81	.145	5.0	3.00	-5.0	.040	-1.7103	-1.7504	
171	4.74	.118	0.0	2.00	5.0	.064	-1.1719	-1.2088	
173	5.91	.148	-5.0	3.00	0.0	.077	-0.5496	-1.6841	*
174	4.83	.121	-20.0	5.00	5.0	.045	-1.0326	-0.9972	
175	6.04	.151	-20.0	5.00	-5.0	.020	0.5451	-1.2540	*
177	3.75	.094	-10.0	5.00	5.0	.013	-0.6848	-0.6872	
178	2.96	.074	-5.0	3.00	-5.0	.048	-0.3961	-0.3972	
180	3.18	.079	-15.0	4.00	-10.0	.111	-0.2402	-0.1260	*
181	5.11	.128	-5.0	2.00	-15.0	.046	-1.0987	-1.0693	
182	2.15	.054	-15.0	3.00	5.0	.002	-0.2110	-0.2583	
183	4.91	.123	-20.0	5.00	-15.0	.012	-0.5434	-0.6179	
184	5.08	.127	5.0	4.00	0.0	.071	-1.3966	-1.3666	
527	1.82	.068	0.0	3.00	0.0	.112	-0.2425	-0.2247	
528	2.87	.108	0.0	3.00	0.0	.076	-0.6242	-0.6156	
529	3.87	.145	0.0	3.00	0.0	.052	-1.1317	-1.1402	

TABLE A-23 (cont'd)

MEASURED AND FITTED RØLL MØMENT
BETA=15.DEG

RUN	CV	W	PHI	THETA	PSI	ZT	MEASURED	FITTED
530	4.98	.187	0.0	3.00	0.0	.043	-1.8887	-1.8901
531	5.97	.224	0.0	3.00	0.0	.037	-2.7344	-2.7166
532	2.96	.111	0.0	3.00	0.0	.052	-0.6523	-0.6537
533	2.97	.111	0.0	3.00	0.0	.104	-0.6600	-0.6610
534	2.96	.111	0.0	3.00	0.0	.154	-0.6553	-0.6496
536	3.98	.149	0.0	3.00	0.0	.146	-1.2016	-1.1957
537	3.97	.149	0.0	3.00	0.0	.195	-1.2206	-1.1671
538	2.96	.111	5.0	3.00	0.0	.075	-0.6762	-0.6682
539	2.96	.111	-5.0	3.00	0.0	.074	-0.6271	-0.6351
540	3.00	.112	-10.0	3.00	0.0	.063	-0.6248	-0.6339
541	2.97	.111	-15.0	3.00	0.0	.044	-0.5921	-0.6167
542	2.98	.112	-20.0	3.00	0.0	.019	-0.5851	-0.6326
543	2.98	.112	0.0	3.00	5.0	.074	-0.6712	-0.6817
544	2.98	.112	0.0	3.00	-5.0	.078	-0.6372	-0.6369
545	2.99	.112	0.0	3.00	-10.0	.079	-0.6172	-0.6024
546	2.97	.112	0.0	3.00	-20.0	.057	-0.5475	-0.5695
547	2.99	.112	0.0	3.00	-15.0	.084	-0.5840	-0.5572
548	2.97	.111	0.0	2.00	0.0	.080	-0.6618	-0.6678
549	2.98	.112	0.0	4.00	0.0	.060	-0.6513	-0.6607
550	2.97	.112	0.0	5.00	0.0	.059	-0.6442	-0.6525
551	3.01	.113	0.0	6.00	0.0	.055	-0.6579	-0.6682
552	1.90	.071	-15.0	4.00	5.0	.136	-0.2270	-0.2098
553	4.03	.151	-5.0	3.00	-5.0	.064	-1.1401	-1.1445
555	5.98	.224	5.0	4.00	-20.0	.064	-2.4324	-2.4020
556	4.99	.187	-10.0	4.00	5.0	.136	-1.6930	-1.7548
558	3.99	.150	-15.0	6.00	0.0	.003	-1.0988	-1.1003
559	3.00	.113	-5.0	3.00	-5.0	.071	-0.6177	-0.6239
560	6.00	.225	0.0	2.00	-5.0	.051	-2.6841	-2.7120
561	5.00	.188	-15.0	5.00	0.0	.065	-1.5140	-1.5477 *
564	6.01	.225	-20.0	3.00	5.0	.054	-2.6857	-2.5406
566	6.01	.225	0.0	3.00	5.0	.086	-2.8147	-2.7890
567	6.00	.225	-20.0	5.00	-20.0	-.008	-1.8092	-1.8143
568	3.98	.149	-10.0	6.00	0.0	.014	-1.1378	-1.1095
569	3.97	.149	5.0	4.00	-10.0	.169	-0.9218	-0.9793
570	2.99	.112	-5.0	3.00	0.0	.146	-0.6061	-0.6158
571	4.97	.186	-5.0	6.00	-20.0	.049	-1.5132	-1.5284
572	3.00	.112	-5.0	3.00	-5.0	.071	-0.6164	-0.6225
573	5.95	.223	-5.0	2.00	-20.0	.082	-1.8986	-1.8762
577	4.97	.186	5.0	3.00	-20.0	.106	-1.2832	-1.3540
579	1.99	.075	-15.0	6.00	-5.0	.186	-0.0751	-0.0533
580	2.96	.111	0.0	6.00	-20.0	.191	-0.2730	-0.2695
581	6.00	.225	-20.0	2.00	0.0	-.006	-2.6244	-2.6502
583	5.95	.223	-15.0	2.00	-5.0	.050	-2.3339	-2.3299
585	01	.225	-10.0	3.00	-5.0	.058	-2.4547	-2.4432
586	2.96	.111	-5.0	3.00	-5.0	.072	-0.6028	-0.6055
588	3.91	.147	-5.0	3.00	-5.0	.125	-1.0049	-0.9877
593	4.03	.151	-10.0	6.00	-5.0	.021	-1.1233	-1.0898
594	2.97	.111	-20.0	4.00	0.0	.138	-0.4282	-0.3898
595	3.01	.113	0.0	4.00	-15.0	.104	-0.5849	-0.5293
596	2.03	.076	-5.0	5.00	5.0	.276	-0.2956	-0.2743

TABLE A-23 (cont'd)

MEASURED AND FITTED RØLL MØMENT
BETA=15.DEG

RUN	CV	W	PHI	THETA	PSI	ZT	MEASURED	FITTED
598	3.01	.113	-10.0	5.00	-10.0	.128	-0.3973	-0.3839
599	3.02	.113	-5.0	3.00	-5.0	.073	-0.6242	-0.6278
600	2.01	.075	-10.0	6.00	-10.0	.254	-0.0296	0.0004*
601	5.02	.188	-20.0	5.00	-10.0	.026	-1.2615	-1.2612
602	5.05	.189	-20.0	2.00	-10.0	-.030	-1.7568	-1.7397
603	3.05	.114	-15.0	5.00	-15.0	.036	-0.4692	-0.4519
604	5.99	.225	-10.0	4.00	-15.0	.052	-2.1649	-2.1632
618	1.92	.144	0.0	3.00	0.0	.093	-0.5386	-0.5491
619	2.99	.224	0.0	3.00	0.0	.070	-.3353	-1.3411
620	2.50	.188	0.0	3.00	0.0	.078	-0.9294	-0.9404
621	3.07	.230	0.0	3.00	0.0	.050	-1.4088	-1.4041
622	3.06	.230	0.0	3.00	0.0	.086	-1.4085	-1.4059
623	3.05	.228	0.0	3.00	0.0	.136	-1.3867	-1.3844
625	3.01	.226	5.0	3.00	0.0	.061	-1.3803	-1.3635
626	2.99	.224	-5.0	3.00	0.0	.066	-1.3151	-1.3174
627	3.01	.226	-10.0	3.00	0.0	.049	-1.3142	-1.3052
628	3.00	.225	-15.0	3.00	0.0	.028	-1.2970	-1.2793
629	3.01	.226	-20.0	3.00	0.0	.003	-1.2917	-1.2768
630	2.98	.223	0.0	3.00	5.0	.063	-1.3350	-1.3259
631	2.97	.223	0.0	3.00	-5.0	.070	-1.2940	-1.3029
632	2.96	.222	0.0	3.00	-10.0	.071	-1.2518	-1.2558
633	2.97	.223	0.0	3.00	-15.0	.072	-1.2087	-1.2091
634	2.97	.223	0.0	3.00	-20.0	.053	-1.1703	-1.1930
635	2.97	.223	0.0	2.00	0.0	.062	-1.3316	-1.3350
636	2.98	.223	0.0	4.00	0.0	.060	-1.3181	-1.3163
637	2.98	.223	0.0	5.00	0.0	.053	-1.3071	-1.3067
638	2.98	.223	0.0	6.00	0.0	.048	-1.3014	-1.3010
639	2.47	.185	0.0	6.00	-20.0	.058	-0.7829	-0.8005
640	2.48	.186	5.0	6.00	-5.0	.232	-0.8563	-0.8495
641	2.96	.222	-5.0	3.00	-5.0	.108	-1.2335	-1.2190
642	2.48	.186	-5.0	6.00	5.0	.275	-0.8103	-0.8184
643	1.97	.148	0.0	4.00	-10.0	.206	-0.4317	-0.4735
644	2.50	.187	-20.0	3.00	-10.0	-.010	-0.8288	-0.7831
645	1.99	.149	-20.0	3.00	-10.0	.069	-0.3896	-0.3371
646	2.96	.222	-5.0	3.00	-5.0	.061	-1.2578	-1.2636
660	2.99	.224	-15.0	3.00	5.0	.071	-1.2669	-1.2831
661	1.99	.150	-5.0	3.00	-15.0	.106	-0.4834	-0.5112
662	2.99	.224	-20.0	6.00	-10.0	.108	-0.6613	-0.7009
665	2.51	.188	0.0	3.00	-5.0	.092	-0.9165	-0.9294
667	3.00	.225	5.0	6.00	-10.0	.181	-1.1418	-1.1937
668	2.00	.150	-5.0	3.00	-10.0	.066	-0.5413	-0.5740
670	2.99	.224	-5.0	5.00	-20.0	.158	-0.8701	-0.8546
671	2.51	.188	5.0	5.00	0.0	.043	-0.9516	-0.9237
672	2.99	.224	-5.0	3.00	-5.0	.056	-1.2809	-1.2931
673	1.99	.149	-5.0	6.00	-5.0	.255	-0.4199	-0.4199
674	2.50	.188	5.0	5.00	0.0	.091	-0.9582	-0.9508
675	2.50	.188	-5.0	6.00	0.0	.037	-0.8965	-0.9270
676	1.99	.149	-20.0	3.00	-20.0	-.023	-0.4476	-0.4413
678	1.99	.149	-10.0	3.00	5.0	.079	-0.5614	-0.5693
681	2.51	.188	-10.0	6.00	-15.0	.034	-0.7961	-0.8108

TABLE A-23 (cont'd)

MEASURED AND FITTED RØLL MØMENT
BETA=15.DEG

RUN	CV	W	PHI	THETA	PSI	ZT	MEASURED	FITTED
682	2.50	.187	5.0	6.00	-10.0	.256	-0.6967	-0.7378
683	2.97	.223	-5.0	3.00	-5.0	.075	-1.2834	-1.2566
685	2.99	.224	-15.0	6.00	0.0	.229	-0.8474	-0.8746
686	2.50	.188	-15.0	8.00	0.0	.279	-0.4544	-0.4468
688	2.99	.224	0.0	5.00	-15.0	.185	-1.0253	-1.0015
689	2.00	.150	0.0	5.00	5.0	.077	-0.5871	-0.6011
690	3.00	.225	5.0	6.00	-20.0	.124	-1.1257	-1.0841
691	2.02	.152	-5.0	8.00	-15.0	.342	-0.1319	-0.1187
693	2.46	.185	-10.0	2.00	5.0	.086	-0.8660	-0.8889
694	2.96	.222	-20.0	4.00	-10.0	.124	-0.7128	-0.6936
695	2.96	.222	-5.0	3.00	-5.0	.073	-1.2613	-1.2541
697	2.47	.185	-10.0	6.00	0.0	.224	-0.7035	-0.6934
698	2.99	.224	-10.0	6.00	-5.0	.134	-1.0847	-1.0610
699	3.00	.225	5.0	8.00	-10.0	.222	-1.1510	-1.1422
700	3.00	.225	-20.0	4.00	-5.0	.177	-0.7608	-0.7535
701	2.48	.186	-20.0	5.00	-20.0	.087	-0.3284	-0.3157

MEAN ERRØR= -0.0061
STANDARD DEVIATIØN= 0.0212

TABLE A-24

MEASURED AND FITTED RØLL MØMENT
BETA=20.DEG

RUN	CV	W	PHI	THETA	PSI	ZT	MEASURED	FITTED	
316	4.00	.000	4.8	3.70	5.0	.086	-0.0416	-0.0441	
317	4.00	.000	4.7	3.70	5.0	.088	-0.0410	-0.0463	*
318	4.00	.000	4.7	3.60	0.0	.131	0.0026	-0.0066	*
319	4.00	.000	-0.3	3.60	0.0	.095	0.0069	0.0440	*
320	2.00	.000	-0.3	3.60	0.0	.152	0.0141	0.0432	*
321	2.00	.000	-0.3	3.70	0.0	.151	0.0136	0.0432	*
322	3.00	.000	-0.3	3.60	0.0	.113	0.0107	0.0434	*
323	5.00	.000	-0.3	3.60	0.0	.076	0.0079	0.0447	*
324	6.00	.000	-0.3	3.70	0.0	.067	0.0031	0.0463	*
325	4.00	.000	-0.3	3.60	0.0	.075	0.0096	0.0433	*
326	4.00	.000	4.7	3.60	0.0	.116	0.0107	-0.0009	*
328	4.00	.000	9.7	3.70	0.0	.070	-0.0002	-0.0046	*
329	4.00	.000	14.7	3.70	0.0	.047	-0.0139	0.0114	*
330	4.00	.000	19.8	3.60	0.0	.025	-0.0401	0.0632	*
331	4.00	.000	27.2	3.60	0.0	-.006	-0.0643	0.2006	
332	3.00	.000	19.7	3.60	0.0	.191	-0.1451	-0.1434	*
333	4.00	.000	-0.3	3.60	0.0	.153	0.0153	0.0454	
335	5.00	.000	-0.3	3.60	0.0	.183	0.0354	0.0476	*
336	4.00	.000	-0.3	3.60	0.0	.200	0.0255	0.0462	
337	4.00	.000	27.3	4.70	0.0	.179	-0.3322	-0.3701	*
338	4.00	.000	-0.3	4.60	0.0	.076	0.0115	0.0442	*
339	4.00	.000	-0.3	2.60	0.0	.105	0.0157	0.0435	*
340	3.00	.000	4.7	2.60	0.0	.098	0.0074	0.0249	
342	6.00	.000	19.8	3.70	0.0	.141	-0.4192	-0.3904	
344	3.00	.000	27.3	5.70	0.0	.281	-0.3441	-0.3564	
345	3.00	.000	27.3	5.60	0.0	.173	-0.2137	0.2386	
347	6.00	.000	-0.3	5.60	0.0	.059	0.0016	0.0499	*
348	4.00	.000	-0.3	5.60	0.0	.074	0.0074	0.0450	*
349	5.00	.000	4.8	5.60	0.0	.053	0.0085	-0.0363	*
350	4.00	.000	-0.3	6.70	0.0	.068	0.0090	0.0458	*
351	6.00	.000	-5.3	6.70	0.0	.051	0.0046	0.2211	*
353	2.00	.000	27.2	6.70	0.0	.068	-0.0545	0.1592	*
354	3.00	.000	-5.3	6.60	0.0	.110	0.0273	0.0879	*
355	4.00	.000	9.8	6.70	0.0	.186	-0.2022	-0.2019	
356	3.00	.000	-0.3	6.70	-5.0	.236	0.0880	0.1509	*
357	4.00	.000	9.7	6.70	-5.0	.069	0.0116	-0.0186	*
358	4.00	.000	9.7	6.70	-5.0	.060	0.0173	-0.0140	*
359	4.00	.000	9.7	6.70	-5.0	.061	0.0142	-0.0143	*
362	4.00	.000	9.7	5.60	-5.0	.065	0.0167	0.0102	
364	3.00	.000	14.7	5.70	-5.0	.266	0.0040	0.0055	
365	5.00	.000	19.8	5.60	-5.0	.170	-0.0173	-0.1572	*
366	6.00	.000	19.8	4.70	-5.0	.132	-0.0219	-0.1448	*
368	4.00	.000	9.7	2.60	-5.0	.109	0.0215	0.1168	*
369	2.00	.000	9.7	2.60	-5.0	.172	0.0159	0.0455	*
370	4.00	.000	14.7	2.60	-5.0	.045	-0.0064	0.1271	*
371	5.00	.000	4.7	2.60	-5.0	.145	0.0882	0.2135	*
374	5.00	.000	-0.3	3.60	-5.0	.069	0.0602	0.0830	
375	5.00	.000	-0.3	3.60	-5.0	.067	0.0622	0.0787	*
376	4.00	.000	-0.3	3.70	-5.0	.087	0.0597	0.0968	
377	4.00	.000	4.7	3.60	5.0	.081	-0.0450	-0.0345	

TABLE A-24 (cont'd)

MEASURED AND FITTED RØLL MØMENT
BETA=20.DEG

RUN	CV	W	PHI	THETA	PSI	ZT	MEASURED	FITTED
378	4.00	.000	4.8	3.60	5.0	.064	-0.0309	-0.0059*
379	4.00	.000	-0.3	3.60	5.0	.084	-0.0386	-0.0071*
380	3.00	.000	-5.3	3.60	5.0	.148	-0.0088	-0.0063
381	3.00	.000	-0.3	2.60	5.0	.117	-0.0290	-0.0200
382	5.00	.000	4.7	2.60	5.0	.076	-0.0594	-0.0550*
383	3.00	.000	19.7	2.60	5.0	.028	-0.0314	0.0389*
385	5.00	.000	14.8	2.60	5.0	.153	-0.4471	-0.4275
387	6.00	.000	4.8	2.60	5.0	.151	-0.3042	-0.3264*
388	3.00	.000	-5.2	6.70	5.0	.310	0.0324	-0.0147*
389	5.00	.000	9.7	6.60	5.0	.040	-0.0143	-0.1500*
395	4.00	.000	27.4	5.60	5.0	.176	-0.9092	-0.7415*
396	4.00	.000	4.8	3.60	5.0	.081	-0.0397	-0.0349
397	4.00	.000	-0.2	3.60	10.0	.084	-0.0828	-0.0687*
398	3.00	.000	-5.3	3.60	10.0	.146	-0.0588	-0.0999*
399	4.00	.000	9.8	3.60	10.0	.087	-0.0826	-0.1628*
400	5.00	.000	19.7	3.60	10.0	.019	-0.[illegible]027	-0.0991
401	4.00	.000	14.8	3.60	10.0	.163	-0.5464	-0.5295
402	3.00	.000	14.7	6.60	10.0	.223	-0.4761	-0.4538
403	3.00	.000	4.7	6.60	10.0	.152	-0.1537	-0.1396*
404	5.00	.000	-0.3	6.60	10.0	.091	-0.1577	-0.0667*
405	2.00	.000	-5.3	6.60	10.0	.120	-0.0131	-0.0016*
406	4.00	.000	27.3	6.60	10.0	-.027	-0.0994	-0.1127*
407	3.00	.000	27.2	6.60	10.0	-.025	-0.0485	0.0945*
408	2.00	.000	19.7	4.60	10.0	.038	-0.0233	0.0570*
409	4.00	.000	9.7	2.60	10.0	.063	-0.0645	-0.0718*
410	3.00	.000	27.3	5.60	10.0	-.016	-0.0765	0.0757*
411	3.00	.000	-5.2	5.60	10.0	.211	-0.0992	-0.1177
412	3.00	.000	-5.3	5.60	10.0	.212	-0.1000	-0.1175
413	5.00	.000	-5.2	5.50	15.0	.089	-0.1800	-0.1961
414	3.00	.000	-0.3	5.60	15.0	.201	-0.2361	-0.2554*
415	5.00	.000	19.7	5.50	15.0	.028	-0.2223	-0.3502*
417	5.00	.00[illegible]	-0.3	5.50	15.0	.057	-0.1178	-0.0714*
419	6.00	.00[illegible]	27.2	3.60	15.0	-.048	-0.0868	0.1867*
420	4.00	.000	14.8	2.60	15.0	.056	-0.1201	-0.1647
421	3.00	.000	4.8	2.60	15.0	.109	-0.1385	-0.1544*
422	3.00	.000	9.8	2.60	15.0	.152	-0.2223	-0.3485*
423	4.00	.000	14.8	2.60	15.0	.130	-0.6039	-0.5665
424	6.00	.000	4.8	2.60	15.0	.125	-0.7351	-0.7718
427	5.00	.000	14.8	4.50	15.0	.077	-0.4399	-0.4305*
428	4.00	.000	4.8	4.60	15.0	.215	-0.5406	-0.6586*
429	4.00	.000	-0.2	4.70	15.0	.290	-0.8821	-0.8639
430	6.00	.000	-5.2	4.60	15.0	.080	-0.2284	-0.2455
431	3.00	.000	14.8	4.60	15.0	.135	-0.3171	-0.3365*
432	5.00	.000	14.8	4.60	15.0	.033	-0.0681	-0.1589*
433	3.00	.000	14.7	4.60	15.0	.056	-0.0631	-0.0803
434	4.00	.000	-0.3	4.60	15.0	.063	-0.0780	-0.0628*
435	2.00	.000	4.7	6.70	15.0	.123	-0.0604	-0.0258*
436	6.00	.000	9.7	6.70	15.0	.041	-0.0978	-0.2031*
437	3.00	.000	27.2	6.60	15.0	.001	-0.1491	-0.1284
438	4.00	.000	-5.2	6.60	15.0	.185	-0.3181	-0.3128

TABLE A-24 (cont'd)

MEASURED AND FITTED RØLL MØMENT
BETA=20.DEG

RUN	CV	W	PHI	THETA	PSI	ZT	MEASURED	FITTED*
439	4.00	.000	-0.3	6.60	20.0	.051	-0.0755	-0.1409
440	3.00	.000	4.7	5.60	20.0	.075	-0.0827	-0.0755
443	6.00	.000	27.2	5.50	20.0	-.013	-0.5430	-0.5408
445	2.00	.000	27.3	4.60	20.0	.138	-0.4348	-0.4412
446	4.00	.000	27.2	4.60	20.0	-.025	-0.1604	-0.1118
447	2.00	.000	19.8	4.60	20.0	.112	-0.1962	-0.2042
448	3.00	.000	4.7	4.60	20.0	.115	-0.2394	-0.1866
449	3.00	.000	9.7	4.60	20.0	.065	-0.0785	-0.0707
450	4.00	.000	-0.3	3.60	20.0	.085	-0.2177	-0.2732
451	3.00	.000	19.7	3.60	20.0	.057	-0.1914	-0.2114
453	6.00	.000	9.8	3.60	20.0	.119	-1.0668	-1.0249
454	4.00	.000	9.8	3.60	20.0	.190	-0.9105	-0.9149
455	6.00	.000	19.7	2.60	20.0	.032	-0.3195	-0.3532
456	4.00	.000	14.8	2.60	20.0	.072	-0.3243	-0.3431
457	4.00	.000	19.8	1.60	20.0	.014	-0.0530	-0.0571
459	4.00	.000	4.8	3.60	5.0	.077	-0.0397	-0.0289
211	2.07	.052	0.0	3.00	0.0	.106	-0.1824	-0.1819
212	2.96	.074	0.0	3.00	0.0	.079	-0.3998	-0.3972
213	3.92	.098	0.0	3.00	0.0	.070	-0.7196	-0.7167
214	5.00	.125	0.0	3.00	0.0	.056	-1.1834	-1.1878
215	5.96	.149	0.0	3.00	0.0	.047	-1.7224	-1.7193
216	2.94	.074	0.0	3.00	0.0	.069	-0.3964	-0.3928
217	3.01	.075	0.0	3.00	0.0	.106	-0.4177	-0.4113
218	3.02	.075	0.0	3.00	0.0	.146	-0.4239	-0.4118
219	3.97	.099	0.0	3.00	0.0	.122	-0.7423	-0.7326
220	4.00	.100	0.0	3.00	0.0	.147	-0.7643	-0.7449
221	5.00	.125	0.0	3.00	0.0	.120	-1.1856	-1.1875
222	4.95	.124	0.0	3.00	0.0	.146	-1.1839	-1.1638
223	5.96	.149	0.0	3.00	0.0	.116	-1.7339	-1.7168
224	3.00	.075	5.0	3.00	0.0	.074	-0.4184	-0.4133
225	2.97	.074	-5.0	3.00	0.0	.074	-0.4025	-0.3905
226	2.99	.075	-10.0	3.00	0.0	.069	-0.3941	-0.3844
227	2.99	.075	-15.0	3.00	0.0	.060	-0.3782	-0.3770
228	2.97	.074	-20.0	3.00	0.0	.048	-0.3510	-0.3777
229	2.95	.074	-27.5	3.00	0.0	.029	-0.3241	-0.3997
230	2.98	.074	0.0	3.00	5.0	.079	-0.4381	-0.4211
231	2.98	.074	0.0	3.00	-5.0	.078	-0.3761	-0.3782
232	2.94	.073	0.0	3.00	-10.0	.079	-0.3257	-0.3331
233	3.02	.075	0.0	3.00	-15.0	.078	-0.2917	-0.3008
234	3.01	.075	0.0	3.00	-20.0	.088	-0.1911	-0.2008
235	2.98	.075	0.0	2.00	0.0	.088	-0.4095	-0.4114
236	3.00	.075	0.0	4.00	0.0	.078	-0.4086	-0.4055
237	3.01	.075	0.0	5.00	0.0	.081	-0.4120	-0.4117
238	2.97	.074	0.0	6.00	0.0	.065	-0.3954	-0.4100
239	4.90	.123	5.0	2.00	0.0	.123	-1.2110	-1.1749
240	4.00	.100	-5.0	3.00	0.0	.125	-0.7063	-0.6998
241	5.99	.150	-15.0	5.00	-10.0	.014	-1.5994	-1.5723
242	5.99	.150	-27.5	6.00	-5.0	-.038	-1.4059	-1.3887
243	3.97	.099	-27.5	6.00	-20.0	-.046	-0.4896	-0.4655
244	2.99	.075	-5.0	3.00	-5.0	.077	-0.3653	-0.3646

TABLE A-24 (cont'd)

MEASURED AND FITTED RØLL MØMENT
BETA=20. DEG

RUN	CV	W	PHI	THETA	PSI	ZT	MEASURED	FITTED
245	4.91	.123	5.0	3.00	-20.0	.056	-0.8102	-0.5597 *
246	1.74	.044	-15.0	6.00	0.0	.155	-0.0672	-0.0608
247	3.90	.098	-10.0	2.00	-20.0	.111	0.1197	-0.0561 *
248	4.96	.124	5.0	2.00	-5.0	.059	-1.1203	-1.1003
250	3.99	.100	-5.0	6.00	-20.0	.058	-0.5020	-0.4823
252	6.05	.151	-10.0	3.00	5.0	.105	-1.7447	-1.7729
254	3.98	.099	-20.0	4.00	-5.0	.104	-0.3649	-0.3502
255	2.99	.075	-10.0	3.00	-10.0	.136	-0.1162	-0.1418
256	2.97	.074	-5.0	3.00	-5.0	.079	-0.3632	-0.3592
259	5.02	.125	-20.0	4.00	5.0	.135	-1.1970	-1.1025
261	3.00	.075	-5.0	2.00	-10.0	.067	-0.3392	-0.3543
262	4.01	.100	-5.0	6.00	-15.0	.059	-0.5698	-0.5935
263	2.10	.053	-15.0	2.00	-20.0	.055	-0.0624	-0.0703
264	6.06	.152	5.0	3.00	-20.0	.052	-0.5375	-0.9152 *
265	6.09	.152	-15.0	2.00	-15.0	.027	-2.1494	-1.4978 *
266	4.00	.100	-10.0	5.00	-20.0	.086	-0.2628	-0.2840
267	4.93	.123	-15.0	2.00	-20.0	.063	-0.3145	-0.4583 *
268	2.98	.074	-5.0	3.00	-5.0	.078	-0.3646	-0.3610
269	2.03	.051	-15.0	4.00	-15.0	.069	-0.0901	-0.0877
270	5.97	.149	-5.0	5.00	5.0	.095	-1.4585	-1.6685 *
271	4.95	.124	-10.0	2.00	-10.0	.056	-0.9782	-0.9711
272	5.93	.148	0.0	3.00	-5.0	.067	-1.5979	-1.6554
273	5.00	.125	-5.0	2.00	5.0	.069	-1.2545	-1.2344
274	5.95	.149	-5.0	3.00	0.0	.099	-1.6687	-1.6392
275	4.97	.124	-20.0	5.00	5.0	.040	-1.0717	-1.0885
276	5.98	.150	-25.0	5.00	-5.0	.031	-1.0891	-1.1305
278	5.62	.140	5.0	6.00	-15.0	.104	0.4337	-1.1535 *
279	2.75	.069	-5.0	3.00	-5.0	.093	-0.3220	-0.2884
280	3.69	.092	-15.0	5.00	5.0	.021	-0.6434	-0.6699
282	4.09	.102	-20.0	4.00	-10.0	.083	-0.3399	-0.3023
283	4.92	.123	-10.0	2.00	-[illegible]5.0	.066	-1.5612	-0.7528 *
284	2.06	.052	-20.0	3.00	5.0	.062	-0.1788	-0.1999
285	4.84	.121	-25.0	5.00	-15.0	.025	-0.4731	-0.4573
312	2.26	.085	0.0	3.00	0.0	.095	-0.3317	-0.3522
313	3.20	.120	0.0	3.00	0.0	.084	-0.7068	-0.7183
314	4.29	.161	0.0	3.00	0.0	.055	-1.3147	-1.3117
315	5.24	.196	0.0	3.00	0.0	.046	-1.9748	-1.9718
316	6.14	.230	0.0	3.00	0.0	.037	-2.7286	-2.7368
317	3.12	.117	0.0	3.00	0.0	.063	-0.6769	-0.6845
318	3.01	.113	0.0	3.00	0.0	.125	-0.6196	-0.6309
320	4.16	.156	0.0	3.00	0.0	.125	-1.2141	-1.2229
321	4.05	.152	0.0	3.00	0.0	.125	-1.1633	-1.1620
324	4.99	.187	0.0	3.00	0.0	.129	-1.7728	-1.7786
325	4.99	.187	0.0	3.00	0.0	.152	-1.7863	-1.7796
326	3.01	.113	5.0	3.00	0.0	.078	-0.6340	-0.6412
327	3.01	.113	-5.0	3.00	0.0	.081	-0.6316	-0.6220
328	2.99	.112	-10.0	3.00	0.0	.071	-0.6087	-0.5981
329	3.01	.113	-15.0	3.00	0.0	.051	-0.6051	-0.6093
330	3.02	.113	-20.0	3.00	0.0	.044	-0.5848	-0.6021
331	2.99	.112	-27.5	3.00	0.0	.021	-0.5495	-0.6171

TABLE A-24 (cont'd)

MEASURED AND FITTED RØLL MØMENT
BETA=20.DEG

RUN	CV	W	PHI	THETA	PSI	ZT	MEASURED	FITTED
332	2.95	.111	0.0	3.00	5.0	.041	-0.6268	-0.5978
333	3.05	.114	0.0	3.00	-5.0	.092	-0.5988	-0.6126
334	2.81	.106	0.0	3.00	-10.0	.097	-0.4588	-0.4704
335	2.81	.105	0.0	3.00	-15.0	.098	-0.3975	-0.4080
336	2.83	.106	0.0	3.00	-20.0	.068	-0.3978	-0.4322
337	2.87	.107	0.0	2.00	0.0	.105	-0.5591	-0.5879
338	2.90	.109	0.0	4.00	0.0	.078	-0.5721	-0.5849
341	3.06	.115	0.0	5.00	0.0	.081	-0.6396	-0.6549
346	1.90	.071	-20.0	4.00	5.0	.136	-0.2054	-0.1982
347	4.06	.152	-5.0	3.00	-5.0	.086	-1.0703	-1.0725 *
348	4.97	.186	5.0	4.00	-20.0	.086	-1.3223	-0.9918
349	4.99	.187	-15.0	4.00	5.0	.175	-1.6829	-1.7157
350	3.01	.113	-5.0	3.00	-5.0	.087	-0.5762	-0.5813
351	4.05	.152	-15.0	6.00	0.0	.019	-1.1289	-1.1283
352	5.94	.223	0.0	2.00	-5.0	.040	-2.5017	-2.5404
353	4.99	.187	-20.0	5.00	0.0	.072	-1.4452	-1.4461
355	5.00	.187	-20.0	5.00	0.0	.079	-1.4348	-1.4351
359	4.00	.150	-25.0	5.00	5.0	.098	-1.0320	-1.0128
360	4.00	.150	0.0	4.00	5.0	.209	-1.2223	-1.3033
361	5.99	.225	-25.0	5.00	-20.0	-.011	-1.8156	-1.8239
362	4.01	.150	-15.0	6.00	0.0	.016	-1.1173	-1.1122
363	4.04	.152	5.0	4.00	-10.0	.192	-0.8146	-0.7753
364	4.03	.151	-5.0	3.00	0.0	.129	-1.0866	-1.0996
365	2.97	.111	-5.0	3.00	-5.0	.091	-0.5559	-0.5607
366	4.97	.187	-10.0	6.00	-20.0	.055	-1.3699	-1.2586 *
370	5.52	.207	-5.0	3.00	-20.0	.090	-1.1949	-1.2207
371	5.02	.188	5.0	3.00	0.0	.069	-1.8285	-1.8258
372	2.99	.112	5.0	2.00	-20.0	.094	-0.3158	-0.3263 *
373	1.97	.074	-20.0	6.00	-5.0	.187	-0.0297	-0.0045
374	2.92	.109	-20.0	6.00	-5.0	.105	-0.3591	-0.3100
376	5.00	.187	-5.0	2.00	0.0	.071	-1.8004	-1.7682
378	4.02	.151	0.0	6.00	-20.0	.126	-0.6567	-0.6038
379	6.01	.225	-20.0	2.00	0.0	.004	-2.5850	-2.5777
380	4.97	.187	-20.0	2.00	-5.0	.082	-1.3691	-1.3941
381	2.99	.112	-5.0	3.00	-5.0	.082	-0.5715	-0.5791
384	5.95	.223	-10.0	3.00	5.0	.094	-2.5477	-2.5196
386	4.85	.182	-15.0	3.00	-5.0	.092	-1.3706	-1.3604
387	5.12	.192	-5.0	3.00	-5.0	.114	-1.6565	-1.6667
390	6.10	.229	5.0	5.00	-15.0	.089	-2.2693	-2.2551
395	4.23	.158	-10.0	6.00	-5.0	.038	-1.2010	-1.2059
396	3.19	.119	-27.5	4.00	0.0	.128	-0.4561	-0.4055
397	3.15	.118	-5.0	4.00	-15.0	.097	-0.4856	-0.4936
398	4.10	.154	-5.0	5.00	5.0	.137	-1.1790	-1.1983
399	3.07	.115	-5.0	3.00	-5.0	.061	-0.6270	-0.6426 *
402	6.06	.227	-10.0	2.00	5.0	.040	-2.7201	-2.6007
403	3.11	.117	-10.0	5.00	-10.0	.151	-0.3454	-0.3568
404	2.98	.112	-15.0	6.00	-10.0	.135	-0.2463	-0.2490
405	4.04	.151	-20.0	5.00	-10.0	.090	-0.5854	-0.5970
702	2.99	.224	0.0	3.00	0.0	.093	-1.2513	-1.2571
703	1.98	.149	0.0	3.00	0.0	.123	-0.5394	-0.5643

TABLE A-24 (cont'd)

MEASURED AND FITTED RØLL MØMENT
BETA=20. DEG

RUN	CV	W	PHI	THETA	PSI	ZT	MEASURED	FITTED
704	2.49	.187	0.0	3.00	0.0	.103	-0.8606	-0.8800
705	3.01	.226	0.0	3.00	0.0	.071	-1.2762	-1.2765
706	2.99	.224	0.0	3.00	0.0	.115	-1.2556	-1.2590
707	2.99	.224	0.0	3.00	0.0	.176	-1.2623	-1.2560
709	3.01	.226	5.0	3.00	0.0	.085	-1.2851	-1.2767
710	3.01	.226	-5.0	3.00	0.0	.091	-1.2614	-1.2597
711	3.01	.226	-10.0	3.00	0.0	.076	-1.2599	-1.2338
712	3.00	.225	-15.0	3.00	0.0	.057	-1.2387	-1.2085
713	3.00	.225	-20.0	3.00	0.0	.028	-1.2335	-1.2246
714	3.00	.225	-27.5	3.00	0.0	.006	-1.1991	-1.2191
715	3.01	.226	0.0	3.00	5.0	.088	-1.3015	-1.2827
716	3.00	.225	0.0	3.00	-5.0	.099	-1.2185	-1.2327
717	3.01	.225	0.0	3.00	-10.0	.099	-1.1660	-1.1764
718	3.01	.225	0.0	3.00	-15.0	.103	-1.0775	-1.0801
719	3.01	.226	0.0	3.00	-20.0	.104	-0.9575	-0.9587
720	3.01	.226	0.0	2.00	0.0	.090	-1.2883	-1.3017
721	3.02	.226	0.0	4.00	0.0	.100	-1.2632	-1.2658
722	3.00	.225	0.0	5.00	0.0	.094	-1.2503	-1.2558
723	3.01	.226	0.0	6.00	0.0	.089	-1.2498	-1.2843
724	2.53	.190	0.0	6.00	-20.0	.084	-0.7225	-0.7474
726	2.53	.189	5.0	8.00	-5.0	.256	-0.8552	-0.8031
728	2.99	.224	-5.0	3.00	-5.0	.165	-1.1429	-1.1101
730	2.99	.224	-5.0	6.00	5.0	.267	-1.1944	-1.1958
731	1.95	.147	0.0	5.00	-10.0	.249	-0.3687	-0.3512
732	2.49	.187	-27.5	3.00	-10.0	-.010	-0.8231	-0.7471
733	3.00	.225	-5.0	3.00	-5.0	.100	-1.2060	-1.2070 *
735	1.97	.148	-27.5	3.00	-10.0	.079	-0.3201	-0.1787
736	3.00	.2[illegible]	-20.0	.00	5.0	.094	-1.2309	-1.2026
737	3.00	.[illegible]	-27.5	6.00	-10.0	.141	-0.3908	-0.4155
738	1.99	.149	-10.0	3.00	-15.0	.137	-0.3689	-0.3637
741	2.48	.186	0.0	3.00	-5.0	.132	-0.8232	-0.8300
743	2.53	.190	5.0	8.00	-10.0	.273	-0.6812	-0.6970
744	2.04	.153	-10.0	3.00	-10.0	.092	-0.5162	-0.5114
746	3.01	.226	-5.0	5.00	-20.0	.242	-0.4856	-0.4887
747	3.01	.226	-5.0	3.00	-5.0	.086	-1.2235	-1.2323
749	3.07	.230	-10.0	6.00	-5.0	.166	-1.0464	-1.0469
750	2.57	.193	5.0	5.00	0.0	.129	-0.9263	-0.9190
751	2.57	.193	-10.0	[illegible].00	0.0	.067	-0.8862	-0.9225
752	2.07	.155	-27.[illegible]	3.00	[illegible]0.0	-.018	-0.4487	-0.4329
754	2.00	.150	5.0	6.00	0.0	.257	-0.5818	-0.5161
755	2.14	.160	-15.0	3.00	5.0	.120	-0.5870	-0.6034 *
757	2.51	.188	0.0	8.00	-20.0	.339	-0.0507	-0.2834
758	2.51	.189	-15.0	6.00	-15.0	.062	-0.7471	-0.7239
759	2.51	.188	5.0	6.00	[illegible].0	.280	-0.6254	-0.6172
760	3.00	.225	-5.0	3.00	[illegible].0	.094	-1.2555	-1.2118
761	3.00	.225	-15.0	5.00	0.0	.257	-0.9106	-0.9353
763	2.51	.188	-20.0	7.00	0.0	.301	-0.4232	-0.4002
764	2.99	.224	0.0	5.00	-5.0	.103	-1.1960	-1.2149
765	2.99	.224	-5.0	5.00	-15.0	.183	-0.8991	-0.8266 *
766	2.02	.151	0.0	5.00	5.0	.372	-0.3287	-0.6272

TABLE A-24 (cont'd)

MEASURED AND FITTED RØLL MØMENT
BETA=20.DEG

RUN	CV	W	PHI	THETA	PSI	ZT	MEASURED	FITTED
769	2.51	.188	-10.0	8.00	-15.0	.234	-0.4116	-0.3966
771	3.00	.225	-10.0	2.00	5.0	.107	-1.2864	-1.2926
772	3.00	.225	-25.0	5.00	-10.0	.151	-0.4892	-0.4881
773	2.98	.224	-5.0	3.00	-5.0	.103	-1.1846	-1.1847
774	2.49	.186	-10.0	4.00	0.0	.251	-0.7090	-0.7277
775	2.98	.224	-10.0	6.00	-5.0	.176	-0.9817	-0.9670
777	2.49	.187	5.0	8.00	-10.0	.330	-0.5592	-0.6042
780	2.97	.223	-25.0	6.00	-5.0	.212	-0.4021	-0.4741
781	2.48	.186	-25.0	5.00	-20.0	.104	-0.1535	-0.1714

MEAN ERRØR= 0.0143
STANDARD DEVIATIØN= 0.0269

TABLE A-25

MEASURED AND FITTED YAW MØMENT
BETA=10.DEG

RUN	CV	W	PHI	THETA	PSI	ZT	MEASURED	FITTED	
3	4.00	.000	2.1	2.60	0.0	.043	0.0762	0.0870	
5	4.00	.000	4.6	2.50	0.0	.035	0.0817	0.0883	
6	4.00	.000	7.2	2.60	0.0	.139	0.1094	0.1060	
7	4.00	.000	9.7	2.50	0.0	.020	0.0807	0.0901	
8	4.00	.000	12.2	2.40	0.0	.011	0.0805	0.0927	
1	4.00	.000	4.7	2.50	5.0	.028	0.0808	0.0865	
2	4.00	.000	0.1	2.60	0.0	.048	0.0788	0.0860	
9	4.00	.000	0.0	2.60	-5.0	.046	0.0854	0.0907	
10	4.00	.000	0.0	2.60	5.0	.046	0.0764	0.0812	
11	4.00	.000	0.0	2.60	10.0	.048	0.0709	0.0770	
12	4.00	.000	0.1	2.60	15.0	.047	0.0671	0.0748	
13	4.00	.000	0.1	2.60	20.0	.046	0.0664	0.0756	
14	4.00	.000	0.1	1.60	0.0	.062	0.0838	0.0862	
15	4.00	.000	0.0	3.70	0.0	.039	0.0850	0.0860	
16	4.00	.000	0.0	4.70	0.0	.036	0.0887	0.0860	
17	4.00	.000	0.0	5.70	0.0	.032	0.0884	0.0860	
18	4.00	.000	0.0	2.60	0.0	.038	0.0852	0.0860	
19	4.00	.000	0.1	2.60	0.0	.061	0.0819	0.0861	
21	4.00	.000	0.0	1.60	0.0	.048	0.0850	0.0860	
23	4.00	.000	0.0	1.60	0.0	.049	0.0801	0.0860	
24	4.00	.000	5.1	2.80	0.0	.039	0.1019	0.0870	
25	4.00	.000	0.1	2.70	0.0	.101	0.0994	0.0861	
26	4.00	.000	0.1	2.70	0.0	.159	0.1121	0.0863	
27	4.00	.000	0.1	2.70	0.0	.170	0.1099	0.0864	
29	2.00	.000	0.0	2.60	0.0	.083	0.0824	0.0860	
30	3.00	.000	0.0	2.60	0.0	.057	0.0843	0.0860	
31	5.00	.000	0.0	2.60	0.0	.040	0.0853	0.0860	
32	6.00	.000	0.0	2.60	0.0	.035	0.0861	0.0860	
34	5.00	.000	2.4	2.40	-5.0	.076	0.0869	0.1007	
36	2.00	.000	7.4	5.50	-5.0	.287	0.1594	0.1945	*
37	3.00	.000	5.0	4.50	20.0	.058	0.0410	0.0613	
40	4.00	.000	12.4	4.50	20.0	.007	0.0980	0.1209	
41	3.00	.000	5.0	4.50	20.0	.031	0.0868	0.0741	*
42	2.00	.000	10.0	4.50	20.0	.079	0.0348	0.0770	
43	2.00	.000	10.0	4.50	20.0	.056	0.0545	0.0677	
44	5.00	.000	7.4	4.50	20.0	.019	0.1250	0.1220	
45	2.00	.000	12.4	4.50	20.0	.124	0.0053	0.1045	*
46	3.00	.000	10.0	3.50	20.0	.110	-0.0268	0.0828	*
47	4.00	.000	10.0	2.50	20.0	.042	0.0376	0.0912	*
48	4.00	.000	0.1	6.50	20.0	.111	-0.0905	-0.1121	
49	6.00	.000	9.9	2.40	20.0	.034	0.0338	0.1254	*
50	4.00	.000	4.9	5.60	20.0	.243	-0.4109	-0.3925	
51	3.00	.000	0.0	5.50	20.0	.059	0.0492	0.0686	*
52	4.00	.000	7.5	2.50	20.0	.056	0.0179	0.0845	*
53	4.00	.000	2.4	3.50	20.0	.112	-0.0534	-0.0018	*
54	3.00	.000	2.5	5.50	20.0	.033	0.0878	0.0963	
55	5.00	.000	0.1	6.50	10.0	.045	0.0699	0.0568	
56	2.00	.000	10.0	4.60	10.0	.030	0.0765	0.0650	
57	4.00	.000	5.0	2.50	10.0	.036	0.0856	0.0843	
58	3.00	.000	12.5	6.50	10.0	-.005	0.0921	0.1397	*

TABLE A-25 (cont'd)

MEASURED AND FITTED YAW MØMENT
BETA=10. DEG

RUN	CV	W	PHI	THETA	PSI	ZT	MEASURED	FITTED
59	4.00	.000	2.5	3.60	5.0	.040	0.0826	0.0782
60	4.00	.000	2.5	3.60	5.0	.029	0.0871	0.0813
61	4.00	.000	5.1	3.50	5.0	.043	0.0827	0.0771
62	3.00	.000	0.0	2.50	5.0	.054	0.0775	0.0812
63	5.00	.000	2.5	2.50	5.0	.035	0.0929	0.0854
64	3.00	.000	9.9	2.60	5.0	.013	0.0901	0.0842
65	4.00	.000	5.0	2.60	5.0	.039	0.0857	0.0847
66	5.00	.000	5.0	6.60	5.0	.022	0.0971	0.1088
67	3.00	.000	9.9	6.60	5.0	.020	0.0976	0.1063
68	6.00	.000	12.4	5.70	5.0	-.006	0.1102	0.1301
69	3.00	.000	-5.1	6.60	5.0	.240	0.0395	-0.0427*
70	6.00	.000	-5.1	5.70	5.0	.016	0.0976	0.1078
71	6.00	.000	7.4	5.60	5.0	.012	0.1001	0.0991
72	4.00	.000	12.4	5.60	5.0	.102	-0.0575	0.0571*
73	2.00	.000	0.0	5.60	5.0	.060	0.0837	0.0854
74	4.00	.000	2.4	3.60	5.0	.041	0.0943	0.0780
76	5.00	.000	2.4	5.60	0.0	.026	0.1015	0.0852
77	2.00	.000	4.9	5.70	0.0	.329	0.1552	0.1595
78	6.00	.000	7.5	5.70	0.0	.015	0.0870	0.0774
79	3.00	.000	12.4	5.60	0.0	.112	0.0393	0.1047*
80	3.00	.000	12.4	5.60	0.0	.247	0.1941	0.1842
81	4.00	.000	12.4	4.60	0.0	.117	0.0269	0.0979*
82	4.00	.000	4.9	6.60	0.0	.099	0.0251	0.0973*
83	3.00	.000	-5.1	6.60	0.0	.049	0.0971	0.0822
84	3.00	.000	2.4	2.60	0.0	.044	0.0890	0.0886*
85	4.00	.000	7.4	2.60	-5.0	.026	0.0896	0.0896
87	2.00	.000	4.9	2.60	-5.0	.135	0.1074	0.1028
88	4.00	.000	4.9	2.60	-5.0	.061	0.0937	0.0964
89	2.00	.000	7.4	5.70	-5.0	.285	0.1748	0.1957
90	6.00	.000	7.5	6.70	-5.0	.014	0.0775	0.0636
91	2.00	.000	0.0	4.60	-5.0	.119	0.0922	0.0897
92	5.00	.000	0.0	3.60	-5.0	.037	0.0882	0.0931
93	6.00	.000	9.9	3.50	-5.0	.110	0.1516	0.1507
94	6.00	.000	9.9	4.60	-5.0	.078	0.0751	0.1380*
95	6.00	.000	10.0	5.60	-5.0	.002	0.0676	0.0332*
97	4.00	.000	9.9	5.60	-5.0	.037	0.0919	0.0877
98	5.00	.000	9.9	5.50	-5.0	.097	0.0576	0.1642*
99	3.00	.000	0.1	6.60	-5.0	.142	0.0964	0.1269
100	4.00	.000	4.9	6.60	-5.0	.034	0.0937	0.0846*
101	4.00	.000	2.4	3.50	5.0	.039	0.0857	0.0787
102	6.00	.000	9.9	2.50	0.0	.105	0.0648	0.0561
103	3.00	.000	-5.1	2.50	10.0	.122	0.0650	0.0686
105	5.00	.000	10.0	3.50	10.0	.013	0.1033	0.0962
106	4.00	.000	5.0	3.50	10.0	.045	0.0886	0.0700
107	3.00	.000	7.4	6.50	10.0	.158	0.0112	0.0232*
108	4.00	.000	12.5	6.60	10.0	-.006	0.1127	0.1833*
109	2.00	.000	-5.1	6.60	10.0	.057	0.0909	0.0968
110	3.00	.000	2.4	6.50	10.0	.077	0.0542	0.0691
111	3.00	.000	-5.1	5.60	10.0	.135	0.0409	0.0151*
112	3.00	.000	12.5	5.60	10.0	.006	0.0987	0.1023

TABLE A-25 (cont'd)

MEASURED AND FITTED YAW MOMENT
BETA=10.DEG

RUN	CV	W	PHI	THETA	PSI	ZT	MEASURED	FITTED	
113	4.00	.000	2.4	3.60	5.0	.038	0.1005	0.0788	
114	4.00	.000	0.0	3.50	15.0	.040	0.0999	0.0682	*
115	4.00	.000	12.5	3.60	15.0	.001	0.1145	0.1014	
116	3.00	.000	7.4	2.60	15.0	.139	0.1456	0.1280	
117	4.00	.000	7.4	2.50	15.0	.030	0.1084	0.0875	
118	3.00	.000	5.0	2.50	15.0	.067	0.0653	0.0873	*
119	3.00	.000	2.4	2.50	15.0	.057	0.0815	0.0781	
120	6.00	.000	2.4	2.50	15.0	.069	-0.0020	0.0196	*
121	3.00	.000	0.0	2.60	15.0	.172	0.1242	0.0992	
126	6.00	.000	4.9	2.50	20.0	.065	-0.0479	0.0294	*
127	4.00	.000	5.0	2.60	20.0	.137	0.0489	0.0545	
128	6.00	.000	12.5	5.50	20.0	.022	0.0462	0.1365	*
129	2.00	.000	12.5	6.60	0.0	.057	0.0781	0.0827	
130	5.00	.000	6.6	****	7.5	-.181	0.0943	0.0961	
131	6.00	.000	-5.0	6.70	0.0	.022	0.0879	0.0820	
132	3.00	.000	9.9	3.60	0.0	.148	0.1171	0.1196	
133	4.00	.000	7.4	3.60	5.0	.145	0.0881	0.0591	*
134	3.00	.000	9.9	3.70	5.0	.224	0.2431	0.1373	*
135	4.00	.000	2.4	3.60	5.0	.040	0.0951	0.0783	
138	4.00	.000	-5.0	5.60	20.0	.221	-0.4006	-0.3955	
139	4.00	.000	-5.1	3.60	5.0	.044	0.0904	0.0801	
1	1.97	.049	0.0	3.00	0.0	.057	0.1363	0.1430	
2	1.98	.050	0.0	3.00	0.0	.058	0.1326	0.1439	
3	3.15	.079	0.0	3.00	0.0	.029	0.2612	0.2553	
4	4.01	.100	0.0	3.00	0.0	.022	0.3821	0.3788	
6	5.30	.133	0.0	3.00	0.0	.033	0.6284	0.6362	
8	6.00	.150	0.0	3.00	0.0	.032	0.7936	0.8053	
10	3.01	.075	-2.5	3.00	0.0	.042	0.2374	0.2402	
9	3.12	.078	5.0	3.00	0.0	.038	0.2532	0.2556	
11	3.02	.076	-5.0	3.00	0.0	.037	0.3425	0.2403	*
12	2.95	.074	-7.5	3.00	0.0	.033	0.2318	0.2307	
13	2.98	.075	-10.0	3.00	0.0	.032	0.2405	0.2347	
14	2.96	.074	-12.5	3.00	0.0	.026	0.2352	0.2316	
15	2.95	.074	0.0	2.00	0.0	.064	0.2281	0.2357	
16	2.99	.075	0.0	4.00	0.0	.047	0.2326	0.2409	
19	2.72	.068	0.0	5.00	0.0	.041	0.2030	0.2101	
20	2.68	.067	0.0	5.00	0.0	.041	0.1968	0.2060	
21	3.14	.079	0.0	6.00	0.0	.033	0.2416	0.2571	
22	2.01	.050	-7.5	6.00	0.0	.089	0.1554	0.1552	
23	2.98	.074	0.0	3.00	0.0	.025	0.2354	0.2327	
24	2.97	.074	0.0	3.00	0.0	.072	0.2322	0.2410	
25	2.46	.062	0.0	3.00	0.0	.151	0.1742	0.1932	
26	3.46	.087	0.0	3.00	0.0	.103	0.3032	0.3098	
27	2.96	.074	0.0	3.00	0.0	.127	0.2312	0.2456	
28	2.93	.073	0.0	3.00	0.0	.181	0.2351	0.2425	
30	4.49	.112	0.0	3.00	0.0	.193	0.4692	0.4703	
31	5.03	.126	0.0	3.00	0.0	.115	0.5865	0.5850	
32	3.15	.079	0.0	3.00	-5.0	.055	0.2626	0.2667	
34	3.07	.077	-2.5	3.00	-5.0	.054	0.2475	0.2556	
35	5.82	.146	0.0	3.00	-5.0	.049	0.7666	0.7806	

TABLE A-25 (cont'd)

MEASURED AND FITTED YAW MØMENT
BETA=10.DEG

RUN	CV	W	PHI	THETA	PSI	ZT	MEASURED	FITTED
36	5.77	.144	-12.5	6.00	-5.0	.008	0.6890	0.7202
37	4.91	.123	5.0	2.00	-5.0	.040	0.5526	0.5460
38	2.87	.072	-10.0	4.00	-5.0	.157	0.2258	0.2236
39	5.96	.149	-12.5	5.00	-5.0	.045	0.8784	0.8677
40	3.00	.075	0.0	3.00	-10.0	.135	0.2412	0.2589
41	6.02	.150	-7.5	5.00	-10.0	.025	0.7433	0.8349 *
42	2.95	.074	-2.5	2.00	-10.0	.057	0.2316	0.2333
43	5.21	.130	-5.0	2.00	-10.0	.022	0.6089	0.5983
46	3.09	.077	-5.0	2.00	-10.0	.092	0.2364	0.2343
47	3.14	.079	-2.5	3.00	-5.0	.036	0.2533	0.2617
48	3.09	.077	0.0	3.00	-15.0	.041	0.2547	0.2656
56	5.23	.131	-5.0	3.00	-15.0	.060	0.7169	0.6903
57	5.19	.130	-5.0	2.00	-15.0	.027	0.5922	0.5889
58	5.12	.128	-12.5	5.00	-15.0	.027	0.6770	0.6144 *
59	3.05	.076	0.0	3.00	-20.0	.048	0.2541	0.2647
60	4.17	.104	-12.5	6.00	-20.0	-.007	0.2445	0.2626
62	5.18	.129	5.0	3.00	-20.0	.022	0.5675	0.5566
65	4.10	.102	-2.5	6.00	-20.0	.033	0.3751	0.3718
66	6.15	.154	-10.0	5.00	-20.0	.004	0.7198	0.7351
67	2.11	.053	-7.5	2.00	-20.0	.046	0.1485	0.1543
69	4.05	.101	-5.0	5.00	-20.0	.047	0.4392	0.4276
70	3.01	.075	-7.5	2.00	-20.0	.076	0.2522	0.2151
71	3.00	.075	0.0	3.00	5.0	.038	0.2283	0.2320
72	6.08	.152	-5.0	3.00	5.0	.057	0.8201	0.8231
74	5.05	.126	-10.0	3.00	5.0	.108	0.5548	0.5538
75	6.03	.151	-2.5	5.00	5.0	.047	0.7812	0.7815
76	5.05	.126	-2.5	2.00	5.0	.038	0.5624	0.5867
77	5.05	.126	-10.0	5.00	5.0	.031	0.5821	0.5872
78	4.02	.101	-7.5	5.00	5.0	.008	0.3619	0.3937
79	2.04	.051	-10.0	3.00	5.0	.016	0.1340	0.1377
80	5.33	.133	-2.5	3.00	0.0	.061	0.6683	0.6536
82	3.87	.097	-2.5	2.00	0.0	.099	0.3631	0.3610
83	3.02	.075	-2.5	3.00	-5.0	.038	0.2392	0.2468
418	1.65	.069	0.0	3.00	0.0	.060	0.1482	0.1595
419	2.96	.111	0.0	3.00	0.0	.044	0.3145	0.3125
420	3.95	.148	0.0	3.00	0.0	.033	0.5271	0.5231
421	5.02	.188	0.0	3.00	0.0	.025	0.8393	0.8349
422	6.09	.228	0.0	3.00	0.0	.022	1.2063	1.2303
423	3.86	.145	0.0	3.00	0.0	.028	0.5067	0.4998
424	3.91	.146	0.0	3.00	0.0	.045	0.5162	0.5174
425	3.96	.148	0.0	3.00	0.0	.067	0.5357	0.5373
426	4.03	.151	0.0	3.00	0.0	.117	0.5465	0.5636
427	4.01	.150	0.0	3.00	0.0	.158	0.5458	0.5577
428	3.99	.150	5.0	3.00	0.0	.027	0.5411	0.5320
429	4.02	.151	-2.5	3.00	0.0	.031	0.5427	0.5417
430	3.99	.150	-5.0	3.00	0.0	.027	0.5309	0.5361
431	4.01	.150	-7.5	3.00	0.0	.017	0.5336	0.5386
432	4.00	.150	-10.0	3.00	0.0	.011	0.5405	0.5380
433	4.01	.150	-12.5	3.00	0.0	.006	0.5476	0.5416
434	3.99	.150	-12.5	3.00	5.0	.007	0.5318	0.5350

TABLE A-25 (cont'd)

MEASURED AND FITTED YAW MØMENT
BETA=10.DEG

RUN	CV	W	PHI	THETA	PSI	ZT	MEASURED	FITTED
435	4.00	.150	-12.5	3.00	-5.0	-.002	0.5371	0.5351
436	4.02	.151	-12.5	3.00	-10.0	-.004	0.5321	0.5372
438	3.97	.149	0.0	3.00	5.0	.032	0.5205	0.5244
440	4.01	.150	0.0	3.00	-5.0	.035	0.5473	0.5440
441	4.00	.150	0.0	3.00	-10.0	.036	0.5459	0.5468
443	3.98	.149	0.0	3.00	-15.0	.040	0.5413	0.5470
444	3.98	.149	0.0	3.00	-20.0	.035	0.5280	0.5430
445	3.98	.149	0.0	2.00	0.0	.036	0.5305	0.5316
446	3.98	.149	0.0	4.00	0.0	.032	0.5339	0.5330
448	4.02	.151	0.0	5.00	0.0	.025	0.5431	0.5399
449	4.03	.151	0.0	6.00	0.0	.024	0.5510	0.5412
451	1.81	.068	-10.0	4.00	5.0	.132	0.1222	0.1465
452	4.01	.150	-2.5	3.00	-5.0	.043	0.5515	0.5519
455	4.91	.184	5.0	4.00	-20.0	.131	1.3718	1.0823 *
456	4.90	.184	-7.5	4.00	5.0	.099	0.8403	0.7694 *
457	2.92	.109	-2.5	3.00	-5.0	.043	0.3110	0.3116
458	4.00	.150	-7.5	6.00	0.0	.010	0.5325	0.5261
459	5.96	.224	0.0	2.00	-5.0	.025	0.1833	1.1657 *
460	5.01	.188	-10.0	5.00	0.0	.045	0.8923	0.8570
463	4.02	.151	-12.5	3.00	5.0	.110	0.5324	0.5287
465	5.97	.224	0.0	2.00	5.0	.090	1.1816	1.1615
466	5.97	.224	-12.5	5.00	-20.0	.011	1.1574	1.1509
467	4.00	.150	-7.5	6.00	0.0	.011	0.5371	0.5273
469	5.05	.189	5.0	4.00	-10.0	.083	0.9472	0.9398
470	3.01	.113	-2.5	3.00	0.0	.131	0.3095	0.3308
471	2.99	.112	-2.5	3.00	-5.0	.047	0.3227	0.3261
473	4.96	.186	-5.0	6.00	-20.0	.024	0.7801	0.7754
475	4.97	.186	-2.5	2.00	-20.0	.086	0.8635	0.8655
476	4.97	.186	5.0	3.00	0.0	.031	0.8238	0.8109
483	1.98	.074	-10.0	6.00	-5.0	.168	0.1769	0.1796
484	2.91	.109	-2.5	2.00	0.0	.089	0.2953	0.3033
485	3.01	.113	0.0	6.00	-20.0	.133	0.4644	0.4619
487	3.93	.148	-10.0	2.00	-5.0	.097	0.4931	0.5209
488	3.00	.113	-2.5	3.00	-5.0	.043	0.3230	0.3271
489	4.13	.155	-5.0	2.00	5.0	.112	0.5967	0.5658
490	6.08	.228	-5.0	2.00	5.0	.081	1.2262	1.2282
491	4.10	.154	-7.5	3.00	-5.0	.075	0.6225	0.5936
492	4.04	.152	0.0	3.00	0.0	.028	0.5512	0.5459
494	3.18	.119	-2.5	4.00	-5.0	.140	0.3633	0.3930
496	6.07	.228	5.0	5.00	-15.0	.074	1.4319	1.4483
499	6.05	.227	-10.0	5.00	-15.0	.001	1.1363	1.1427
500	4.08	.153	-5.0	6.00	-5.0	.015	0.5570	0.5356
502	3.09	.116	-12.5	4.00	0.0	.105	0.3643	0.3474
503	3.10	.116	-2.5	4.00	-15.0	.053	0.3658	0.3663
505	3.03	.114	-2.5	5.00	5.0	.161	0.3243	0.3106
506	3.02	.113	-2.5	3.00	-5.0	.041	0.3282	0.3293
507	3.01	.113	-5.0	2.00	5.0	.092	0.3060	0.3149
508	2.99	.112	-5.0	5.00	-10.0	.104	0.3787	0.3741
512	2.01	.075	-7.5	6.00	-10.0	.220	0.1788	0.1962
513	5.15	.193	-10.0	5.00	-10.0	.042	0.9846	0.9467

TABLE A-25 (cont'd)

MEASURED AND FITTED YAW MØMENT
BETA=10.DEG

RUN	CV	W	PHI	THETA	PSI	ZT	MEASURED	FITTED
514	5.10	.191	-12.5	2.00	-10.0	-.016	0.8239	0.8230
795	3.00	.225	0.0	3.00	0.0	.055	0.6048	0.6052
796	2.99	.224	5.0	3.00	0.0	.047	0.6026	0.5999
797	3.01	.226	-2.5	3.00	0.0	.056	0.5940	0.6095
798	3.00	.225	-5.0	3.00	0.0	.051	0.6015	0.6046
799	3.01	.226	-7.5	3.00	0.0	.046	0.6079	0.6092
800	3.00	.225	-10.0	3.00	0.0	.039	0.6067	0.6045
801	3.00	.225	-12.5	3.00	0.0	.033	0.6135	0.6056
802	2.99	.224	0.0	3.00	5.0	.054	0.5916	0.5939
803	2.99	.224	0.0	3.00	-5.0	.068	0.6156	0.6155
804	2.98	.223	0.0	3.00	-10.0	.072	0.6187	0.6162
805	2.99	.224	0.0	3.00	-15.0	.075	0.6297	0.6244
806	3.00	.225	0.0	3.00	-20.0	.069	0.6256	0.6235
807	3.00	.225	0.0	2.00	0.0	.067	0.6093	0.6053
808	2.97	.223	0.0	4.00	0.0	.058	0.6013	0.6014
809	3.00	.225	0.0	5.00	0.0	.053	0.6076	0.6120
810	2.99	.224	0.0	6.00	0.0	.056	0.5981	0.6110
811	3.00	.225	0.0	3.00	0.0	.051	0.6060	0.6038
812	3.00	.225	0.0	3.00	0.0	.082	0.6124	0.6201
813	3.00	.225	0.0	3.00	0.0	.130	0.6210	0.6322
815	2.01	.151	0.0	3.00	0.0	.104	0.2993	0.2983
816	2.51	.188	-2.5	3.00	0.0	.069	0.4377	0.4300
817	3.01	.226	0.0	6.00	-20.0	.066	0.6265	0.6436
818	3.02	.226	5.0	6.00	-5.0	.175	0.7148	0.7354
819	3.02	.226	-2.5	6.00	5.0	.211	0.6052	0.5857
820	2.03	.152	0.0	4.00	-10.0	.205	0.3608	0.3150
821	3.01	.226	-12.5	3.00	-10.0	.017	0.6081	0.6251
822	3.01	.226	-2.5	3.00	-5.0	.065	0.6176	0.6229
823	2.02	.152	-12.5	3.00	-10.0	.093	0.3172	0.2817
824	2.52	.189	-10.0	3.00	5.0	.111	0.4287	0.4262
825	2.01	.150	-5.0	3.00	-15.0	.112	0.3080	0.2754
826	2.48	.186	-12.5	6.00	-10.0	.190	0.4839	0.4902
827	2.48	.186	-12.5	5.00	5.0	.281	0.4509	0.2746 *
828	2.99	.224	0.0	3.00	-5.0	.084	0.6188	0.6216
829	1.99	.149	5.0	6.00	-10.0	.287	0.4365	0.4254
830	2.00	.150	-5.0	3.00	-10.0	.076	0.3027	0.2858
831	2.50	.187	-2.5	5.00	-20.0	.248	0.6668	0.5360 *
832	2.99	.224	-2.5	3.00	-5.0	.065	0.6175	0.6158
833	1.96	.147	-5.0	6.00	-5.0	.263	0.3219	0.2919
834	2.95	.221	5.0	5.00	0.0	.063	0.5870	0.5978
835	2.96	.222	-5.0	6.00	0.0	.034	0.5819	0.5902
836	1.98	.148	-12.5	3.00	-20.0	.019	0.2874	0.3076
839	2.06	.155	5.0	4.00	0.0	.192	0.3548	0.3584
840	2.03	.153	-7.5	3.00	5.0	.088	0.2945	0.2869
841	2.98	.223	0.0	5.00	-20.0	.219	0.9766	0.7958 *
842	2.99	.224	-7.5	6.00	-15.0	.031	0.6047	0.5880
845	2.98	.223	5.0	6.00	-10.0	.174	0.8010	0.7603
846	3.01	.226	-2.5	3.00	-5.0	.053	0.6248	0.6176
847	2.54	.190	-7.5	5.00	0.0	.242	0.4091	0.4166
848	3.01	.226	-10.0	5.00	0.0	.204	0.6079	0.645

TABLE A-25 (cont'd)

MEASURED AND FITTED YAW MØMENT
BETA=10.DEG

RUN	CV	W	PHI	THETA	PSI	ZT	MEASURED	FITTED
849	2.55	.191	0.0	5.00	-5.0	.046	0.4627	0.4425
850	2.54	.191	-2.5	4.00	-15.0	.180	0.5704	0.4860*
851	2.08	.156	0.0	5.00	5.0	.038	0.3059	0.2922
852	2.53	.190	5.0	6.00	-20.0	.212	0.7852	0.6437*
853	2.05	.154	-5.0	8.00	-15.0	.288	0.4533	0.4693
855	3.01	.226	-5.0	2.00	5.0	.074	0.6025	0.6002
856	2.53	.190	-12.5	4.00	-10.0	.182	0.4117	0.4438
857	3.00	.225	-2.5	3.00	-5.0	.049	0.6181	0.6121
858	2.99	.224	-5.0	4.00	0.0	.157	0.6009	0.6283
859	2.53	.190	-5.0	6.00	-5.0	.169	0.4729	0.5028
861	2.54	.190	-12.5	4.00	-5.0	.209	0.4092	0.4130
862	2.97	.223	-12.5	5.00	-20.0	.057	0.7389	0.6521*
863	3.00	.225	-5.0	4.00	-5.0	.026	-0.1180	0.6065*

MEAN ERRØR= -0.0368
STANDARD DEVIATIØN= 0.2049

TABLE A-26

MEASURED AND FITTED YAW MØMENT
BETA=15.DEG

RUN	CV	W	PHI	THETA	PSI	ZT	MEASURED	FITTED
141	4.00	.000	5.0	3.60	5.0	.050	0.0893	0.1128
142	4.00	.000	-0.3	2.60	0.0	.063	0.0943	0.1110
143	3.00	.000	4.7	2.60	0.0	.053	0.0916	0.1218*
144	6.00	.000	14.8	3.00	0.0	.149	0.1848	0.1794
145	4.00	.000	4.8	3.60	0.0	.050	0.1040	0.1164
146	4.00	.000	-5.2	3.60	0.0	.050	0.0943	0.1064
147	4.00	.000	-0.3	3.60	0.0	.058	0.0998	0.1112
148	4.00	.000	-0.3	3.60	0.0	.061	0.1010	0.1112
149	4.00	.000	-0.3	3.60	0.0	.076	0.1000	0.1112
150	4.00	.000	-0.3	3.60	0.0	.113	0.1052	0.1109
151	4.00	.000	-0.3	3.60	0.0	.163	0.1159	0.1102
152	4.00	.000	-0.3	3.70	0.0	.216	0.1263	0.1091
153	2.00	.000	-2.1	3.60	0.0	.114	0.0950	0.1038
154	3.00	.000	-0.3	3.60	0.0	.077	0.0977	0.1110
155	5.00	.000	-0.3	3.60	0.0	.051	0.1076	0.1113
156	6.00	.000	-0.3	3.60	0.0	.043	0.1066	0.1112
157	4.00	.000	9.8	3.60	0.0	.035	0.1117	0.1200
158	4.00	.000	14.7	3.60	0.0	.014	0.1180	0.1234
159	3.00	.000	14.7	3.60	0.0	.169	0.1479	0.1791
160	4.00	.000	19.8	3.60	0.0	-.005	0.1108	0.1263
161	4.00	.000	19.8	4.60	0.0	.155	0.1228	0.1304
162	4.00	.000	19.7	4.60	0.0	.162	0.1339	0.1377
163	4.00	.000	-0.3	4.60	0.0	.058	0.1198	0.1115
164	4.00	.000	-0.3	5.60	0.0	.056	0.1241	0.1117
165	2.00	.000	4.7	5.60	0.0	.371	0.1897	0.2179
166	6.00	.000	9.7	5.60	0.0	.029	0.1226	0.1060
167	3.00	.000	19.7	5.60	0.0	.161	0.1249	0.1111
168	3.00	.000	19.7	5.60	0.0	.280	0.2818	0.2750
169	2.00	.000	19.7	6.60	0.0	.067	0.1076	0.1037
170	5.00	.000	9.7	6.60	0.0	.030	0.1249	0.1015
171	4.00	.000	9.7	6.60	0.0	.147	0.0329	0.0953*
172	3.00	.000	-5.3	6.60	0.0	.082	0.1147	0.1158
173	4.00	.000	-0.3	6.60	0.0	.055	0.1327	0.1119
174	6.00	.000	-5.2	6.60	0.0	.039	0.1198	0.1195
175	4.00	.000	4.7	3.60	5.0	.061	0.1244	0.1074
185	4.00	.000	4.7	3.60	5.0	.046	0.1256	0.1145
186	4.00	.000	-0.3	3.60	5.0	.065	0.1170	0.1019
187	3.00	.000	-5.3	3.60	5.0	.119	0.1166	0.0798*
189	5.00	.000	-0.3	2.50	5.0	.063	0.0948	0.0917
191	4.00	.000	9.8	3.60	5.0	.173	0.1062	0.1200
192	4.00	.000	9.7	3.60	5.0	.177	0.1030	0.1219
193	3.00	.000	14.7	3.70	5.0	.250	0.3020	0.2662
194	3.00	.000	14.7	3.60	5.0	.017	0.1138	0.1264
195	3.00	.000	14.7	1.60	5.0	.048	0.1059	0.1188
196	6.00	.000	-5.2	5.60	5.0	.035	0.1299	0.1152
197	6.00	.000	9.7	5.60	5.0	.026	0.1222	0.1130
198	6.00	.000	19.8	5.60	5.0	-.016	0.1263	0.1425
199	2.00	.000	-0.3	5.60	5.0	.101	0.0950	0.0941
200	2.00	.000	-5.3	5.60	5.0	.257	0.1044	0.0545*
201	4.00	.000	19.8	5.60	5.0	.139	-0.0282	0.0046*

TABLE A-26 (cont'd)

MEASURED AND FITTED YAW MØMENT
BETA=15.DEG

RUN	CV	W	PHI	THETA	PSI	ZT	MEASURED	FITTED
202	5.00	.000	14.7	6.60	5.0	.010	0.1283	0.1066
203	5.00	.000	4.7	6.60	5.0	.036	0.1113	0.1030
204	5.00	.000	4.8	6.60	5.0	.037	0.1166	0.1019
205	3.00	.000	-5.3	6.60	5.0	.279	0.0958	0.0355*
206	4.00	.000	4.7	3.60	5.0	.055	0.1081	0.1103
207	4.00	.000	-0.3	3.60	-5.0	.063	0.1236	0.1194
208	6.00	.000	14.7	3.60	-5.0	.155	0.2976	0.2914
210	5.00	.000	-0.3	2.50	-5.0	.103	0.1606	0.1473
211	4.00	.000	4.7	2.60	-5.0	.094	0.1407	0.1451
212	2.00	.000	4.7	2.60	-5.0	.162	0.1331	0.1494
213	4.00	.000	9.8	2.60	-5.0	.043	0.1272	0.1380
214	2.00	.000	-0.3	4.60	-5.0	.170	0.1289	0.1222
215	6.00	.000	14.8	4.60	-5.0	.126	0.2470	0.2410
216	5.00	.000	14.7	5.50	-5.0	.150	0.2149	0.2124
218	3.00	.000	9.7	5.60	-5.0	.242	0.1900	0.2053
219	4.00	.000	9.7	5.60	-5.0	.045	0.1343	0.1252
220	6.00	.000	14.8	5.60	-5.0	.007	0.1126	0.1073
221	6.00	.000	14.8	6.60	-5.0	.005	0.1022	0.0990
222	4.00	.000	9.7	6.60	-5.0	.044	0.1362	0.1270
223	3.00	.000	19.7	6.60	10.0	-.009	0.1230	0.1349
224	4.00	.000	19.7	6.60	10.0	-.014	0.1359	0.1417*
225	2.00	.000	-5.3	6.60	10.0	.104	0.0938	0.0569*
226	3.00	.000	4.7	6.60	10.0	.117	0.0434	0.0268
227	5.00	.000	-0.3	6.50	10.0	.070	0.0573	0.0480
228	3.00	.000	14.8	6.60	10.0	.191	-0.0187	-0.0156*
231	3.00	.000	19.8	4.60	10.0	.179	0.1155	0.0682
232	5.00	.000	14.7	4.50	10.0	.035	0.0906	0.0816
233	2.00	.000	14.7	4.60	10.0	.037	0.1038	0.1173
234	4.00	.000	4.8	3.60	5.0	.054	0.1125	0.1104*
235	5.00	.000	4.8	3.50	10.0	.118	-0.0426	0.0404*
238	3.00	.000	9.7	3.60	10.0	.240	0.2873	0.2068
239	4.00	.000	9.8	3.60	10.0	.059	0.0959	0.0943
240	5.00	.000	8.6	3.50	10.0	.020	0.1321	0.1462
241	3.00	.000	4.8	3.60	10.0	.131	0.0864	0.0962
242	4.00	.000	-0.3	3.60	10.0	.064	0.0959	0.0950
243	4.00	.000	9.7	2.60	10.0	.050	0.1131	0.1061
244	3.00	.000	19.7	5.60	10.0	-.003	0.1221	0.1265*
245	3.00	.000	-4.9	5.50	10.0	.180	0.0778	0.0277
246	5.00	.000	-5.2	5.50	15.0	.077	0.0149	0.0118*
247	3.00	.000	-0.3	5.60	15.0	.165	0.0325	0.0103
248	5.00	.000	14.8	5.50	15.0	.029	0.1128	0.0926
249	6.00	.000	14.7	5.60	15.0	.016	0.1772	0.1576
250	5.00	.000	-0.3	5.50	15.0	.044	0.1213	0.1137*
251	2.00	.000	4.7	6.60	15.0	.091	0.0967	0.0451
252	6.00	.000	3.9	6.60	15.0	.026	0.1544	0.1770*
253	3.00	.000	19.7	6.60	15.0	.018	0.1032	0.0523*
254	4.00	.000	-5.3	6.60	15.0	.150	-0.0619	-0.0882*
255	6.00	.000	-5.3	4.60	15.0	.067	0.0441	0.0126*
256	3.00	.000	14.7	4.60	15.0	.094	0.0207	0.0357*
257	5.00	.000	9.8	4.50	15.0	.077	-0.0091	0.0341

TABLE A-26 (cont'd)

MEASURED AND FITTED YAW MOMENT
BETA=15.DEG

RUN	CV	W	PHI	THETA	PSI	ZT	MEASURED	FITTED
258	3.00	.000	4.7	4.60	15.0	.266	0.1721	0.1474*
260	4.00	.000	-0.3	4.60	15.0	.230	0.0133	0.0083*
261	4.00	.000	-0.3	4.60	15.0	.049	0.1303	0.1062
262	3.00	.000	9.8	4.60	15.0	.056	0.1191	0.0920
263	6.00	.000	9.8	4.60	15.0	.033	0.1627	0.1461
264	4.00	.000	-0.3	3.60	15.0	.069	0.0993	0.0851
265	6.00	.000	19.8	3.60	15.0	-.009	0.1788	0.1795
266	4.00	.000	9.8	2.60	15.0	.053	0.1193	0.1033
267	3.00	.000	9.8	2.60	15.0	.095	0.0902	0.1036
268	3.00	.000	4.7	2.60	15.0	.089	0.1023	0.1039*
270	6.00	.000	4.8	2.50	15.0	.099	-0.0525	-0.0129*
271	6.00	.000	4.8	2.50	15.0	.097	-0.0693	-0.0099*
275	4.00	.000	9.8	2.50	15.0	.117	0.0358	0.0745*
276	4.00	.000	4.8	3.60	5.0	.058	0.1267	0.1089
277	4.00	.000	-0.3	3.60	20.0	.068	0.0838	0.0850
277	3.00	.000	14.7	3.50	20.0	.049	0.0905	0.0868*
279	4.00	.000	4.8	3.50	20.0	.133	-0.0319	0.0421*
280	6.00	.000	4.8	2.50	20.0	.100	-0.1558	-0.0226*
281	5.00	.000	4.8	2.50	20.0	.168	0.3047	0.0141*
282	6.00	.000	14.7	2.50	20.0	.028	0.1024	0.1253
283	4.00	.000	14.7	2.50	20.0	.034	0.1060	0.1030
286	4.00	.000	14.7	2.50	20.0	.020	0.1517	0.1301
286	3.00	.000	9.7	4.50	20.0	.043	0.1307	0.1113
287	3.00	.000	9.7	4.50	20.0	.075	0.0722	0.0694
288	4.00	.000	19.8	4.50	20.0	-.004	0.1537	0.1497
289	2.00	.000	14.7	4.50	20.0	.098	0.0631	0.0646
290	2.00	.000	19.8	4.60	20.0	.136	0.0424	0.0348
294	3.00	.000	-0.3	5.50	20.0	.090	0.0427	0.0320*
295	3.00	.000	-0.3	5.60	20.0	.056	0.1022	0.0715*
296	4.00	.000	-0.3	6.60	20.0	.046	0.1227	0.0706*
297	4.00	.000	4.7	3.60	5.0	.059	0.1071	0.1082
298	4.00	.000	4.8	1.60	5.0	.082	0.1158	0.1077
299	4.00	.000	14.7	1.60	5.0	.038	0.1086	0.1053*
300	5.00	.000	-0.3	1.50	15.0	.051	0.1137	0.0636*
109	2.35	.059	0.0	3.00	0.0	.069	0.1637	0.1887
110	2.92	.073	0.0	3.00	0.0	.060	0.2221	0.2408
111	3.88	.097	0.0	3.00	0.0	.052	0.3552	0.3588
112	4.95	.124	0.0	3.00	0.0	.045	0.5421	0.5422
113	6.02	.150	0.0	3.00	0.0	.037	0.7817	0.7788
114	2.87	.072	0.0	3.00	0.0	.049	0.2113	0.2345
115	3.02	.076	0.0	3.00	0.0	.081	0.2357	0.2531
116	3.01	.075	0.0	3.00	0.0	.155	0.2296	0.2593
117	2.82	.071	0.0	3.00	0.0	.156	0.2133	0.2389
119	4.03	.101	0.0	3.00	0.0	.181	0.3944	0.4105
120	3.03	.076	5.0	3.00	0.0	.059	0.2289	0.2617
121	3.02	.075	-5.0	3.00	0.0	.056	0.2244	0.2417
122	2.87	.072	-10.0	3.00	0.0	.052	0.2088	0.2191
123	2.89	.072	-15.0	3.00	0.0	.046	0.2170	0.2213
124	3.05	.076	-20.0	3.00	0.0	.040	0.2279	0.2488
125	3.06	.076	0.0	3.00	5.0	.058	0.2279	0.2514

TABLE A-26 (cont'd)

MEASURED AND FITTED YAW MØMENT
BETA=15.DEG

RUN	CV	W	PHI	THETA	PSI	ZT	MEASURED	FITTED
127	3.01	.075	0.0	3.00	-10.0	.067	0.2619	0.2613
128	3.03	.076	0.0	3.00	-15.0	.066	0.2723	0.2658
129	3.01	.075	0.0	3.00	-20.0	.055	0.2668	0.2533
130	2.99	.075	0.0	2.00	0.0	.066	0.2313	0.2439
131	3.02	.075	0.0	4.00	0.0	.063	0.2263	0.2530
132	3.06	.07[illegible]	[illegible].0	5.00	0.0	.054	0.2172	0.2555
133	3.06	.07[illegible]	0.0	6.00	0.0	.057	0.2150	0.2526
136	4.04	.101	-5.0	3.00	0.0	.095	0.3917	0.3839
137	6.09	[illegible]52	-15.0	5.00	-10.0	.003	0.7154	0.7816 *
138	6.05	.151	-20.0	6.00	-5.0	-.018	0.7734	0.7686
139	4.02	.100	-20.0	6.00	-20.0	-.022	0.3028	0.2851
140	5.00	.125	5.0	3.00	-20.0	.022	0.5240	0.5272
141	4.99	.125	5.0	3.00	-20.0	.021	0.5281	0.5230
142	2.91	.073	-5.0	3.00	-5.0	.056	0.2295	0.2351
143	1.65	.041	-10.0	6.00	0.0	.153	0.1127	0.1285
144	3.79	.095	-10.0	3.00	-20.0	.093	0.5155	0.4117 *
145	4.76	.119	5.0	2.00	-5.0	.045	0.5326	0.5177
147	3.87	.097	-5.0	6.00	-20.0	.026	0.3344	0.3299
148	5.86	.146	-10.0	3.00	5.0	.097	0.7170	0.6751
150	3.94	.098	-15.0	4.00	-5.0	.093	0.4509	0.4273
151	2.95	.074	-10.0	2.00	-10.0	.105	0.2137	0.2364
154	4.78	.120	-5.0	3.00	-5.0	.032	0.5186	0.5033
156	3.00	.075	0.0	2.00	-10.0	.053	0.2463	0.2498
157	3.02	.076	-5.0	6.00	-15.0	.050	0.2555	0.2803
158	3.99	.100	-5.0	6.00	-15.0	.040	0.3826	0.3935
160	2.40	.060	-10.0	2.00	-20.0	.044	0.1840	0.1791
161	6.18	.154	5.0	3.00	-20.0	.044	0.9292	0.9240
162	6.21	.155	5.0	3.00	-20.0	.040	0.9187	0.9148
163	6.18	.154	-10.0	2.00	-15.0	.004	0.7651	0.7728
164	4.38	.110	-10.0	5.00	-20.0	.041	0.5120	0.4637
165	3.23	.081	-10.0	2.00	-20.0	.082	0.2975	0.2932
166	2.15	.054	-10.0	4.00	-15.0	.037	0.1517	0.1628
16[illegible]	2.64	.066	-5.0	3.00	-5.0	.065	0.1972	0.2078
168	5.65	.141	-5.0	5.00	5.0	.073	0.6551	0.6906
169	4.72	.118	-5.0	2.00	-10.0	.052	0.5310	0.5161
170	5.81	.145	5.0	3.00	-5.0	.040	0.7741	0.7513
171	4.74	.118	0.0	2.00	5.0	.064	0.4870	0.4735
173	5.91	.148	-5.0	3.00	0.0	.077	0.7726	0.7670
174	4.83	.121	-20.0	5.00	5.0	.045	0.4661	0.4945
175	6.04	.151	-20.0	5.00	-5.0	.020	0.9062	0.8659
177	3.75	.094	-10.0	5.00	5.0	.013	-0.3904	0.3311 *
178	2.96	.074	-5.0	3.00	-5.0	.048	0.2312	0.2372
180	3.18	.079	-15.0	4.00	-10.0	.111	0.3520	0.3333
181	5.11	.128	-5.0	2.00	-15.0	.046	0.6763	0.6019 *
182	2.15	.054	-15.0	3.00	5.0	.002	0.1376	0.1300
183	4.91	.123	-20.0	5.00	-15.0	.012	0.6682	0.6021 *
184	5.08	.127	5.0	4.00	0.0	.071	0.5780	0.5867
527	1.82	.068	0.0	3.00	0.0	.112	0.1525	0.1750
528	2.87	.108	0.0	3.00	0.0	.076	0.3045	0.3045
529	3.87	.145	0.0	3.00	0.0	.052	0.5049	0.4946

TABLE A-26 (cont'd)

MEASURED AND FITTED YAW MØMENT
BETA=15.DEG

RUN	CV	W	PHI	THETA	PSI	ZT	MEASURED	FITTED
530	4.98	.187	0.0	3.00	0.0	.043	0.8102	0.7910
531	5.97	.224	0.0	3.00	0.0	.037	1.1433	1.1416
532	2.96	.111	0.0	3.00	0.0	.052	0.3122	0.3160
533	2.97	.111	0.0	3.00	0.0	.104	0.3190	0.3244
534	2.96	.111	0.0	3.00	0.0	.154	0.3152	0.3299
536	3.98	.149	0.0	3.00	0.0	.146	0.5475	0.5492
537	3.97	.149	0.0	3.00	0.0	.195	0.5882	0.5632
538	2.96	.111	5.0	3.00	0.0	.075	0.3143	0.3278
539	2.96	.111	-5.0	3.00	0.0	.074	0.3155	0.3091
540	3.00	.112	-10.0	3.00	0.0	.063	0.3212	0.3104
541	2.97	.111	-15.0	3.00	0.0	.044	0.3188	0.3068
542	2.98	.112	-20.0	3.00	0.0	.019	0.3161	0.3113
543	2.98	.112	0.0	3.00	5.0	.074	0.2972	0.3139
544	2.98	.112	0.0	3.00	-5.0	.078	0.3298	0.3310
545	2.99	.112	0.0	3.00	-10.0	.079	0.3501	0.3396
546	2.97	.112	0.0	3.00	-20.0	.057	0.3491	0.3269
547	2.99	.112	0.0	3.00	-15.0	.084	0.3621	0.3488
548	2.97	.111	0.0	2.00	0.0	.080	0.3159	0.3141
549	2.98	.112	0.0	4.00	0.0	.060	0.3141	0.3234
550	2.97	.112	0.0	5.00	0.0	.059	0.3152	0.3201
551	3.01	.113	0.0	6.00	0.0	.055	0.3141	0.3208
552	1.90	.071	-15.0	4.00	5.0	.136	0.1385	0.1194
553	4.03	.151	-5.0	3.00	-5.0	.064	-0.1920	0.5482*
555	5.98	.224	5.0	4.00	-20.0	.064	1.3253	1.3493
556	4.99	.187	-10.0	4.00	5.0	.136	0.8539	0.7774*
558	3.99	.150	-15.0	6.00	0.0	.003	0.5038	0.5042
559	3.00	.113	-5.0	3.00	-5.0	.071	0.3332	0.3267
560	6.00	.225	0.0	2.00	-5.0	.051	1.1802	1.1811
561	5.00	.188	-15.0	5.00	0.0	.065	0.9312	0.8619*
564	6.01	.225	-20.0	3.00	5.0	.054	1.0764	1.0778
566	6.01	.225	0.0	3.00	5.0	.086	1.1178	1.1385
567	6.00	.225	-20.0	5.00	-20.0	-.008	1.1497	1.1565
568	3.98	.149	-10.0	6.00	0.0	.014	0.4889	0.5091
569	3.97	.149	5.0	4.00	-10.0	.169	0.6767	0.6625
570	2.99	.112	-5.0	3.00	0.0	.146	0.3313	0.3110
571	4.97	.186	-5.0	6.00	-20.0	.049	0.8642	0.8779
572	3.00	.112	-5.0	3.00	-5.0	.071	0.3287	0.3259
573	5.95	.223	-5.0	2.00	-20.0	.082	1.2635	1.3535*
577	4.97	.186	5.0	3.00	-20.0	.106	1.1107	1.0030*
579	1.99	.075	-15.0	6.00	-5.0	.186	0.2024	0.2098
580	2.96	.111	0.0	6.00	-20.0	.191	0.5193	0.4975
581	6.00	.225	-20.0	2.00	0.0	-.006	1.1237	1.1116
583	5.95	.223	-15.0	2.00	-5.0	.050	1.1710	1.2009
585	6.01	.225	-10.0	3.00	-5.0	.058	1.2145	1.2342
586	2.96	.111	-5.0	3.00	-5.0	.072	0.3208	0.3191
588	3.91	.147	-5.0	3.00	-5.0	.125	0.5433	0.5427
593	4.03	.151	-10.0	6.00	-5.0	.021	0.4993	0.5310
594	2.97	.111	-20.0	4.00	0.0	.138	0.3088	0.3128
595	3.01	.113	0.0	4.00	-15.0	.104	0.3828	0.3799
596	2.03	.076	-5.0	5.00	5.0	.276	0.1391	0.1547

TABLE A-26 (cont'd)

MEASURED AND FITTED YAW MØMENT
BETA=15.DEG

RUN	CV	W	PHI	THETA	PSI	ZT	MEASURED	FITTED
598	3.01	.113	-10.0	5.00	-10.0	.128	0.4395	0.4042
599	3.02	.113	-5.0	3.00	-5.0	.073	0.3360	0.3298
600	2.01	.075	-10.0	6.00	-10.0	.254	0.1668	0.1904
601	5.02	.188	-20.0	5.00	-10.0	.026	0.9658	0.9393
602	5.05	.189	-20.0	2.00	-10.0	-.030	0.7807	0.7996
603	3.05	.114	-15.0	5.00	-15.0	.036	0.3672	0.3757
604	5.99	.225	-10.0	4.00	-15.0	.052	1.3143	1.3046
618	1.92	.144	0.0	3.00	0.0	.093	0.2680	0.2722
619	2.99	.224	0.0	3.00	0.0	.070	0.5996	0.5981
620	2.50	.188	0.0	3.00	0.0	.078	0.4371	0.4253
621	3.07	.230	0.0	3.00	0.0	.050	0.6189	0.6236
622	3.06	.230	0.0	3.00	0.0	.086	0.6269	0.6314
623	3.05	.228	0.0	3.00	0.0	.136	0.6179	0.6397
625	3.01	.226	5.0	3.00	0.0	.061	0.6056	0.6051
626	2.99	.224	-5.0	3.00	0.0	.066	0.5961	0.5954
627	3.01	.226	-10.0	3.00	0.0	.049	0.5941	0.6008
628	3.00	.225	-15.0	3.00	0.0	.028	0.5918	0.6003
629	3.01	.226	-20.0	3.00	0.0	.003	0.5940	0.6055
630	2.98	.223	0.0	3.00	5.0	.063	0.5724	0.5801
631	2.97	.223	0.0	3.00	-5.0	.070	0.6086	0.6021
632	2.96	.222	0.0	3.00	-10.0	.071	0.6159	0.6069
633	2.97	.223	0.0	3.00	-15.0	.072	0.6266	0.6174
634	2.97	.223	0.0	3.00	-20.0	.053	0.6177	0.6050
635	2.97	.223	0.0	2.00	0.0	.062	0.5856	0.5759
636	2.98	.223	0.0	4.00	0.0	.060	0.5933	0.5947
637	2.98	.223	0.0	5.00	0.0	.053	0.5922	0.5884
638	2.98	.223	0.0	6.00	0.0	.048	0.5897	0.5749
639	2.47	.185	0.0	6.00	-20.0	.058	0.4518	0.4542
640	2.48	.186	5.0	6.00	-5.0	.232	0.5064	0.5236
641	2.96	.222	-5.0	3.00	-5.0	.108	0.6021	0.6083
642	2.48	.186	-5.0	6.00	5.0	.275	0.4098	0.4315
643	1.97	.148	0.0	4.00	-10.0	.206	0.3141	0.3118
644	2.50	.187	-20.0	3.00	-10.0	-.010	0.4202	0.4362
645	1.99	.149	-20.0	3.00	-10.0	.069	0.2965	0.3242
646	2.96	.222	-5.0	3.00	-5.0	.061	0.5925	0.5938
660	2.99	.224	-15.0	3.00	5.0	.071	0.5759	0.5648
661	1.99	.150	-5.0	3.00	-15.0	.106	0.2930	0.2938
662	2.99	.224	-20.0	6.00	-10.0	.108	0.8203	0.8079
665	2.51	.188	0.0	3.00	-5.0	.092	0.4344	0.4405
667	3.00	.225	5.0	6.00	-10.0	.181	0.7530	0.7469
668	2.00	.150	-5.0	3.00	-10.0	.066	0.3025	0.2892
670	2.99	.224	-5.0	5.00	-20.0	.158	0.7493	0.7617
671	2.51	.188	5.0	5.00	0.0	.043	0.4350	0.4215
672	2.99	.224	-5.0	3.00	-5.0	.056	0.6041	0.6044
673	1.99	.149	-5.0	6.00	-5.0	.255	0.3121	0.3138 *
674	2.50	.188	5.0	5.00	0.0	.091	0.1140	0.4301
675	2.50	.188	-5.0	6.00	0.0	.037	0.4204	0.4008
676	1.99	.149	-20.0	3.00	-20.0	-.023	0.2782	0.2724
678	1.99	.149	-10.0	3.00	5.0	.079	0.2756	0.2534
681	2.51	.188	-10.0	6.00	-15.0	.034	0.4456	0.4416

TABLE A-26 (cont'd)

MEASURED AND FITTED YAW MØMENT
BETA=15.DEG

RUN	CV	W	PHI	THETA	PSI	ZT	MEASURED	FITTED
682	2.50	.187	5.0	6.00	-10.0	.256	0.5902	0.5708
683	2.97	.223	-5.0	3.00	-5.0	.075	0.6070	0.6024
685	2.99	.224	-15.0	6.00	0.0	.229	0.6766	0.6576
686	2.50	.188	-15.0	8.00	0.0	.279	0.4896	0.4826
688	2.99	.224	0.0	5.00	-15.0	.185	0.7493	0.7467
689	2.00	.150	0.0	5.00	5.0	.077	0.2802	0.2755
690	3.00	.225	5.0	6.00	-20.0	.124	0.7742	0.7671
691	2.02	.152	-5.0	8.00	-15.0	.342	0.4217	0.4077
693	2.46	.185	-10.0	2.00	5.0	.086	0.4054	0.3644
694	2.96	.222	-20.0	4.00	-10.0	.124	0.7026	0.7329
695	2.96	.222	-5.0	3.00	-5.0	.073	0.5943	0.5995
697	2.47	.185	-10.0	6.00	0.0	.224	0.4374	0.4400
698	2.99	.224	-10.0	6.00	-5.0	.134	0.7094	0.6983
699	3.00	.225	5.0	8.00	-10.0	.222	0.7879	0.8111
700	3.00	.225	-20.0	4.00	-5.0	.177	0.6146	0.6700*
701	2.48	.186	-20.0	5.00	-20.0	.087	0.6029	0.6026

MEAN ERRØR= 0.0009
STANDARD DEVIATIØN= 0.0216

TABLE A-27

MEASURED AND FITTED YAW MØMENT
BETA=20.DEG

RUN	CV	W	PHI	THETA	PSI	ZT	MEASURED	FITTED
316	4.00	.000	4.8	3.70	5.0	.086	0.0834	0.0943
317	4.00	.000	4.7	3.70	5.0	.088	0.0820	0.0935
318	4.00	.000	4.7	3.60	0.0	.131	0.1208	0.1332
319	4.00	.000	-0.3	3.60	0.0	.095	0.1148	0.1212
320	2.00	.000	-0.3	3.60	0.0	.152	0.1062	0.1211
321	2.00	.000	-0.3	3.70	0.0	.151	0.1117	0.1211
322	3.00	.000	-0.3	3.60	0.0	.113	0.1138	0.1212
323	5.00	.000	-0.3	3.60	0.0	.076	0.1045	0.1213
324	6.00	.000	-0.3	3.70	0.0	.067	0.0995	0.1212
325	4.00	.000	-0.3	3.60	0.0	.075	0.1180	0.1214
326	4.00	.000	4.7	3.60	0.0	.116	0.1148	0.1316
328	4.00	.000	9.7	3.70	0.0	.070	0.1312	0.1313
329	4.00	.000	14.7	3.70	0.0	.047	0.1300	0.1298
330	4.00	.000	19.8	3.60	0.0	.025	0.1195	0.1269
331	4.00	.000	27.2	3.60	0.0	-.006	0.1177	0.1156
332	3.00	.000	19.7	3.60	0.0	.191	0.1767	0.1845
333	4.00	.000	-0.3	3.60	0.0	.153	0.1277	0.1208
335	5.00	.000	-0.3	3.60	0.0	.183	0.1365	0.1203
336	4.00	.000	-0.3	3.60	0.0	.200	0.1436	0.1205
337	4.00	.000	27.3	4.70	0.0	.179	0.2192	0.2305
338	4.00	.000	-0.3	4.60	0.0	.076	0.1224	0.1216
339	4.00	.000	-0.3	2.60	0.0	.105	0.1277	0.1208
340	3.00	.000	4.7	2.60	0.0	.098	0.1319	0.1334
342	6.00	.000	19.8	3.70	0.0	.141	0.1471	0.2249*
344	3.00	.000	27.3	5.70	0.0	.281	0.2740	0.2572
345	3.00	.000	27.3	5.60	0.0	.173	0.1875	0.2111
347	6.00	.000	-0.3	5.60	0.0	.059	0.1188	0.1218
348	4.00	.000	-0.3	5.60	0.0	.074	0.1198	0.1216
349	5.00	.000	4.8	5.60	0.0	.053	0.1352	0.1178
350	4.00	.000	-0.3	6.70	0.0	.068	0.1302	0.1217
351	6.00	.000	-5.3	6.70	0.0	.051	0.1229	0.1287
353	2.00	.000	27.2	6.70	0.0	.068	0.1064	0.1782*
354	3.00	.000	-5.3	6.60	0.0	.110	0.1023	0.1126
355	4.00	.000	9.8	6.70	0.0	.186	0.0655	0.1654*
356	3.00	.000	-0.3	6.70	-5.0	.236	0.1768	0.1710
357	4.00	.000	9.7	6.70	-5.0	.069	0.1680	0.1543
358	4.00	.000	9.7	6.70	-5.0	.060	0.1541	0.1417
359	4.00	.000	9.7	6.70	-5.0	.061	0.1702	0.1425
362	4.00	.000	9.7	5.60	-5.0	.065	0.1718	0.1499
364	3.00	.000	14.7	5.70	-5.0	.266	0.2198	0.2143
365	5.00	.000	19.8	5.60	-5.0	.170	0.3718	0.3512
366	6.00	.000	19.8	4.70	-5.0	.132	0.3780	0.3542
368	4.00	.000	9.7	2.60	-5.0	.109	0.1827	0.1864
369	2.00	.000	9.7	2.60	-5.0	.172	0.1492	0.1483
370	4.00	.000	14.7	2.60	-5.0	.045	0.1504	0.1666
371	5.00	.000	4.7	2.60	-5.0	.145	0.1721	0.2032
374	5.00	.000	-0.3	3.60	-5.0	.069	0.1515	0.1534
375	5.00	.000	-0.3	3.60	-5.0	.067	0.1577	0.1513
376	4.00	.000	-0.3	3.70	-5.0	.087	0.1643	0.1543
377	4.00	.000	4.7	3.60	5.0	.081	0.1089	0.0970

TABLE A-27 (cont'd)

MEASURED AND FITTED YAW MØMENT
BETA=20.DEG

RUN	CV	W	PHI	THETA	PSI	ZT	MEASURED	FITTED
378	4.00	.000	4.8	3.60	5.0	.064	0.1136	0.1042
379	4.00	.000	-0.3	3.60	5.0	.084	0.0997	0.0903
380	3.00	.000	-5.3	3.60	5.0	.148	0.1255	0.0849*
381	3.00	.000	-0.3	2.60	5.0	.117	0.1198	0.1068
382	5.00	.000	4.7	2.60	5.0	.076	0.1079	0.1017
383	3.00	.000	19.7	2.60	5.0	.028	0.1233	0.1434
385	5.00	.000	14.8	2.60	5.0	.153	0.1485	0.1232
387	6.00	.000	4.8	2.60	5.0	.151	0.1019	0.0562*
388	3.00	.000	-5.2	6.70	5.0	.310	0.1417	0.0738*
389	5.00	.000	9.7	6.60	5.0	.040	0.1270	0.1142
395	4.00	.000	27.4	5.60	5.0	.176	0.0479	0.1287*
396	4.00	.000	4.8	3.60	5.0	.081	0.1090	0.0971
397	4.00	.000	-0.2	3.60	10.0	.084	0.0761	0.0580
398	3.00	.000	-5.3	3.60	10.0	.146	0.0991	0.0599*
399	4.00	.000	9.8	3.60	10.0	.087	0.0780	0.0590
400	5.00	.000	19.7	3.60	10.0	.019	0.1319	0.1048
401	4.00	.000	14.8	3.60	10.0	.163	0.0279	0.0531*
402	3.00	.000	14.7	6.60	10.0	.223	-0.0077	0.0661*
403	3.00	.000	4.7	6.60	10.0	.152	0.0022	0.0292*
404	5.00	.000	-0.3	6.60	10.0	.091	-0.0139	0.0031*
405	2.00	.000	-5.3	6.60	10.0	.120	0.0749	0.0599
406	4.00	.000	27.3	6.60	10.0	-.027	0.1247	0.1333
407	3.00	.000	27.2	6.60	10.0	-.025	0.1171	0.1329
408	2.00	.000	19.7	4.60	10.0	.038	0.1057	0.1097
409	4.00	.000	9.7	2.60	10.0	.063	0.0912	0.0999
410	3.00	.000	27.3	5.60	10.0	-.016	0.1106	0.1073
411	3.00	.000	-5.2	5.60	10.0	.211	0.0543	0.0234*
412	3.00	.000	-5.3	5.60	10.0	.212	0.0592	0.0232*
413	5.00	.000	-5.2	5.50	15.0	.089	-0.0656	-0.0720
414	3.00	.000	-0.3	5.60	15.0	.201	0.0082	-0.0046*
415	5.00	.000	19.7	5.50	15.0	.028	0.1038	0.0612*
417	5.00	.000	-0.3	5.50	15.0	.057	0.0561	0.0456
419	6.00	.000	27.2	3.60	15.0	-.048	0.1764	0.3141*
420	4.00	.000	14.8	2.60	15.0	.056	0.0782	0.0723
421	3.00	.000	4.8	2.60	15.0	.109	0.0784	0.0872
422	3.00	.000	9.8	2.60	15.0	.152	0.0813	0.1101
423	4.00	.000	14.8	2.60	15.0	.130	0.0407	0.0379*
424	6.00	.000	4.8	2.60	15.0	.125	-0.1381	-0.1306
427	5.00	.000	14.8	4.50	15.0	.077	-0.0990	-0.0486*
428	4.00	.000	4.8	4.60	15.0	.215	0.0570	-0.0320*
429	4.00	.000	-0.2	4.70	15.0	.290	0.2404	0.0698*
430	6.00	.000	-5.2	4.60	15.0	.080	-0.1004	-0.0964
431	3.00	.000	14.8	4.60	15.0	.135	-0.0152	0.0194*
432	5.00	.000	14.8	4.60	15.0	.033	0.1247	0.0688*
433	3.00	.000	14.7	4.60	15.0	.056	0.1044	0.0592*
434	4.00	.000	-0.3	4.60	15.0	.063	0.0871	0.0482*
435	2.00	.000	4.7	6.70	15.0	.123	0.0717	0.0550
436	6.00	.000	9.7	6.70	15.0	.041	0.1103	0.1238
437	3.00	.000	27.2	6.60	15.0	.001	0.1062	0.1075
438	4.00	.000	-5.2	6.60	15.0	.185	-0.1571	-0.1755

TABLE A-27 (cont'd)

MEASURED AND FITTED YAW MØMENT
BETA=20.DEG

RUN	CV	W	PHI	THETA	PSI	ZT	MEASURED	FITTED	
439	4.00	.000	-0.3	6.60	20.0	.051	0.0908	0.0712	*
440	3.00	.000	4.7	5.60	20.0	.075	0.0630	0.0246	*
443	6.00	.000	27.2	5.50	20.0	-.013	0.0773	0.1792	*
445	2.00	.000	27.3	4.60	20.0	.138	0.0505	0.0440	
446	4.00	.000	27.2	4.60	20.0	-.025	0.1414	0.1360	
447	2.00	.000	19.8	4.60	20.0	.112	0.0447	0.0498	*
448	3.00	.000	4.7	4.60	20.0	.115	-0.0283	-0.0057	*
449	3.00	.000	9.7	4.60	20.0	.065	0.0796	0.0364	*
450	4.00	.000	-0.3	3.60	20.0	.085	-0.0088	-0.0222	*
451	3.00	.000	19.7	3.60	20.0	.057	0.0455	0.0301	*
453	6.00	.000	9.8	3.60	20.0	.119	-0.4445	-0.3001	*
454	4.00	.000	9.8	3.60	20.0	.190	0.0500	-0.0368	*
455	6.00	.000	19.7	2.60	20.0	.032	0.0495	-0.0006	*
456	4.00	.000	14.8	2.60	20.0	.072	-0.0169	0.0135	*
457	4.00	.000	19.8	1.60	20.0	.014	0.1482	0.1356	
459	4.00	.000	4.8	3.60	5.0	.077	0.1107	0.0985	
211	2.07	.052	0.0	3.00	0.0	.106	0.1258	0.1653	*
212	2.96	.074	0.0	3.00	0.0	.079	0.2182	0.2368	
213	3.92	.098	0.0	3.00	0.0	.070	0.3499	0.3561	
214	5.00	.125	0.0	3.00	0.0	.056	0.5290	0.5363	
215	5.96	.149	0.0	3.00	0.0	.047	0.7510	0.7454	
216	2.94	.074	0.0	3.00	0.0	.069	0.2161	0.2328	
217	3.01	.075	0.0	3.00	0.0	.106	0.2222	0.2479	
218	3.02	.075	0.0	3.00	0.0	.146	0.2243	0.2532	
219	3.97	.099	0.0	3.00	0.0	.122	0.3587	0.3771	
220	4.00	.100	0.0	3.00	0.0	.147	0.3717	0.3862	
221	5.00	.125	0.0	3.00	0.0	.120	0.5479	0.5635	
222	4.95	.124	0.0	3.00	0.0	.146	0.5519	0.5596	
223	5.96	.149	0.0	3.00	0.0	.116	0.7829	0.7834	
224	3.00	.075	5.0	3.00	0.0	.074	0.2269	0.2481	
225	2.97	.074	-5.0	3.00	0.0	.074	0.2149	0.2303	
226	2.99	.075	-10.0	3.00	0.0	.069	0.2132	0.2261	
227	2.99	.075	-15.0	3.00	0.0	.060	0.2127	0.2206	
228	2.97	.074	-20.0	3.00	0.0	.048	0.2158	0.2142	
229	2.95	.074	-27.5	3.00	0.0	.029	0.2002	0.2062	
230	2.98	.074	0.0	3.00	5.0	.079	0.2008	0.2251	
231	2.98	.074	0.0	3.00	-5.0	.078	0.2421	0.2530	
232	2.94	.073	0.0	3.00	-10.0	.079	0.2554	0.2630	
233	3.02	.075	0.0	3.00	-15.0	.078	0.2926	0.2903	
234	3.01	.075	0.0	3.00	-20.0	.088	0.3324	0.3168	
235	2.98	.075	0.0	2.00	0.0	.088	0.2181	0.2380	
236	3.00	.075	0.0	4.00	0.0	.078	0.2265	0.2416	
237	3.01	.075	0.0	5.00	0.0	.081	0.2313	0.2436	
238	2.97	.074	0.0	6.00	0.0	.065	0.2237	0.2297	
239	4.90	.123	5.0	2.00	0.0	.123	0.5484	0.5496	
240	4.00	.100	-5.0	3.00	0.0	.125	0.3795	0.3701	
241	5.99	.150	-15.0	5.00	-10.0	.014	0.7332	0.7557	
242	5.99	.150	-27.5	6.00	-5.0	-.038	0.7823	0.7953	
243	3.97	.099	-27.5	6.00	-20.0	-.046	0.2995	0.2006	*
244	2.99	.075	-5.0	3.00	-5.0	.077	0.2381	0.2481	

TABLE A-27 (cont'd)

MEASURED AND FITTED YAW MØMENT
BETA=20.DEG

RUN	CV	W	PHI	THETA	PSI	ZT	MEASURED	FITTED
245	4.91	.123	5.0	3.00	-20.0	.056	0.6887	0.6726
246	1.74	.044	-15.0	6.00	0.0	.155	0.1059	0.1188*
247	3.90	.098	-10.0	2.00	-20.0	.111	0.5305	0.4593
248	4.96	.124	5.0	2.00	-5.0	.059	0.5583	0.5531
250	3.99	.100	-5.0	6.00	-20.0	.058	0.4640	0.4763
252	6.05	.151	-10.0	3.00	5.0	.105	0.7206	0.6883
254	3.98	.099	-20.0	4.00	-5.0	.104	0.4322	0.4303
255	2.99	.075	-10.0	3.00	-10.0	.136	0.2593	0.2739
256	2.97	.074	-5.0	3.00	-5.0	.079	0.2348	0.2470
259	5.02	.125	-20.0	4.00	5.0	.135	0.4447	0.4368
261	3.00	.075	-5.0	2.00	-10.0	.067	0.2400	0.2393
262	4.01	.100	-5.0	6.00	-15.0	.059	0.4494	0.4465
263	2.10	.053	-15.0	2.00	-20.0	.055	0.1565	0.1530
264	6.06	.152	5.0	3.00	-20.0	.052	0.9983	1.0048
265	6.09	.152	-15.0	2.00	-15.0	.027	0.8190	0.8213
266	4.00	.100	-10.0	5.00	-20.0	.086	0.6035	0.5946
267	4.93	.123	-15.0	2.00	-20.0	.063	0.7240	0.6988
268	2.98	.074	-5.0	3.00	-5.0	.078	0.2337	0.2471
269	2.03	.051	-15.0	4.00	-15.0	.069	0.1563	0.1920*
270	5.97	.149	-5.0	5.00	5.0	.095	0.8881	0.7336
271	4.95	.124	-10.0	2.00	-10.0	.056	0.5710	0.5513
272	5.93	.148	0.0	3.00	-5.0	.067	0.8201	0.7916
273	5.00	.125	-5.0	2.00	5.0	.069	0.4979	0.4915
274	5.95	.149	-5.0	3.00	0.0	.099	0.7584	0.7593*
275	4.97	.124	-20.0	5.00	5.0	.040	0.4877	0.5415
276	5.98	.150	-25.0	5.00	-5.0	.031	0.9015	0.8629
278	5.62	.140	5.0	6.00	-15.0	.104	1.0839	1.0616
279	2.75	.069	-5.0	3.00	-5.0	.093	0.2094	0.2258
280	3.69	.092	-15.0	5.00	5.0	.021	0.3056	0.3269
282	4.09	.102	-20.0	4.00	-10.0	.083	0.5139	0.5071
283	4.92	.123	-10.0	2.00	-15.0	.066	0.6063	0.6105
284	2.06	.052	-20.0	3.00	5.0	.062	0.1179	0.1115
285	4.84	.121	-25.0	5.00	-15.0	.025	0.6552	0.6578
312	2.26	.085	0.0	3.00	0.0	.095	0.1900	0.2085
313	3.20	.120	0.0	3.00	0.0	.084	0.3403	0.3447
314	4.29	.161	0.0	3.00	0.0	.055	0.5886	0.5733
315	5.24	.196	0.0	3.00	0.0	.046	0.8540	0.8487
316	6.14	.230	0.0	3.00	0.0	.037	1.1458	1.1760
317	3.12	.117	0.0	3.00	0.0	.063	0.3225	0.3228
318	3.01	.113	0.0	3.00	0.0	.125	0.3095	0.3214
320	4.16	.156	0.0	3.00	0.0	.125	0.5661	0.5710
321	4.05	.152	0.0	3.00	0.0	.125	0.5515	0.5447
324	4.99	.187	0.0	3.00	0.0	.129	0.8143	0.8185
325	4.99	.187	0.0	3.00	0.0	.152	0.8226	0.8260
326	3.01	.113	5.0	3.00	0.0	.078	0.3111	0.3187
327	3.01	.113	-5.0	3.00	0.0	.081	0.3003	0.3055
328	2.99	.112	-10.0	3.00	0.0	.071	0.2948	0.2947
329	3.01	.113	-15.0	3.00	0.0	.051	0.2995	0.2923
330	3.02	.113	-20.0	3.00	0.0	.044	0.3074	0.2925
331	2.99	.112	-27.5	3.00	0.0	.021	0.2958	0.2852

TABLE A-27 (cont'd)

MEASURED AND FITTED YAW MØMENT
BETA=20.DEG

RUN	CV	W	PHI	THETA	PSI	ZT	MEASURED	FITTED
332	2.95	.111	0.0	3.00	5.0	.041	0.2919	0.2834
333	3.05	.114	0.0	3.00	-5.0	.092	0.3336	0.3381
334	2.81	.106	0.0	3.00	-10.0	.097	0.3066	0.3150
335	2.81	.105	0.0	3.00	-15.0	.098	0.3284	0.3320
336	2.83	.106	0.0	3.00	-20.0	.068	0.3355	0.3284
337	2.87	.107	0.0	2.00	0.0	.105	0.2791	0.2882
338	2.90	.109	0.0	4.00	0.0	.078	0.2899	0.2930
341	3.06	.115	0.0	5.00	0.0	.081	0.3252	0.3202
346	1.90	.071	-20.0	4.00	5.0	.136	0.1213	0.1289
347	4.06	.152	-5.0	3.00	-5.0	.086	0.5615	0.5585
348	4.97	.186	5.0	4.00	-20.0	.086	1.0923	1.0906 *
349	4.99	.187	-15.0	4.00	5.0	.175	0.8165	0.7190
350	3.01	.113	-5.0	3.00	-5.0	.087	0.3221	0.3251
351	4.05	.152	-15.0	6.00	0.0	.019	0.5050	0.5262
352	5.94	.223	0.0	2.00	-5.0	.040	1.0956	1.0806
353	4.99	.187	-20.0	5.00	0.0	.072	0.8760	0.8423
355	5.00	.187	-20.0	5.00	0.0	.079	0.8818	0.8480
359	4.00	.150	-25.0	5.00	5.0	.098	0.4452	0.4617
360	4.00	.150	0.0	4.00	5.0	.209	0.6036	0.5201 *
361	5.99	.225	-25.0	5.00	-20.0	-.011	1.0619	1.2013 *
362	4.01	.150	-15.0	6.00	0.0	.016	0.4990	0.5118
363	4.04	.152	5.0	4.00	-10.0	.192	0.6229	0.7006 *
364	4.03	.151	-5.0	3.00	0.0	.129	0.5441	0.5279
365	2.97	.111	-5.0	3.00	-5.0	.091	0.3106	0.3190 *
366	4.97	.187	-10.0	6.00	-20.0	.055	0.8791	1.0003 *
370	5.52	.207	-5.0	3.00	-20.0	.090	1.4952	1.3388
371	5.02	.188	5.0	3.00	0.0	.069	0.8082	0.8047
372	2.99	.112	5.0	2.00	-20.0	.094	0.3374	0.3629
373	1.97	.074	-20.0	6.00	-5.0	.187	0.1831	0.1844
374	2.92	.109	-20.0	6.00	-5.0	.105	0.3663	0.3463
376	5.00	.187	-5.0	2.00	0.0	.071	0.7756	0.7565
378	4.02	.151	0.0	6.00	-20.0	.126	0.8677	0.8636
379	6.01	.225	-20.0	2.00	0.0	.004	1.0799	1.0752
380	4.97	.187	-20.0	2.00	-5.0	.082	0.7625	0.7983
381	2.99	.112	-5.0	3.00	-5.0	.082	0.3216	0.3181
384	5.95	.223	-10.0	3.00	5.0	.094	1.0498	1.0653
386	4.85	.182	-15.0	3.00	-5.0	.092	0.8105	0.8109
387	5.12	.192	-5.0	3.00	-5.0	.114	0.9108	0.9127
390	6.10	.229	5.0	5.00	-15.0	.089	1.5533	1.5910
395	4.23	.158	-10.0	6.00	-5.0	.038	0.5652	0.5752
396	3.19	.119	-27.5	4.00	0.0	.128	0.3179	0.3385
397	3.15	.118	-5.0	4.00	-15.0	.097	0.4288	0.4314
398	4.10	.154	-5.0	5.00	5.0	.137	0.5160	0.5168
399	3.07	.115	-5.0	3.00	-5.0	.061	0.3252	0.3215
402	6.06	.227	-10.0	2.00	5.0	.040	1.0797	1.0987
403	3.11	.117	-10.0	5.00	-10.0	.151	0.4651	0.4437
404	2.98	.112	-15.0	6.00	-10.0	.135	0.4615	0.4240
405	4.04	.151	-20.0	5.00	-10.0	.090	0.7272	0.6930
702	2.99	.224	0.0	3.00	0.0	.093	0.5793	0.5793
703	1.98	.149	0.0	3.00	0.0	.123	0.2748	0.2673

TABLE A-27 (cont'd)

MEASURED AND FITTED YAW MØMENT
BETA=20.DEG

RUN	CV	W	PHI	THETA	PSI	ZT	MEASURED	FITTED
704	2.49	.187	0.0	3.00	0.0	.103	0.4164	0.4004
705	3.01	.226	0.0	3.00	0.0	.071	0.5778	0.5734
706	2.99	.224	0.0	3.00	0.0	.115	0.5905	0.5927
707	2.99	.224	0.0	3.00	0.0	.176	0.6057	0.6056
709	3.01	.226	5.0	3.00	0.0	.085	0.5902	0.5906
710	3.01	.226	-5.0	3.00	0.0	.091	0.5842	0.5873
711	3.01	.226	-10.0	3.00	0.0	.076	0.5723	0.5806
712	3.00	.225	-15.0	3.00	0.0	.057	0.5630	0.5734
713	3.00	.225	-20.0	3.00	0.0	.028	0.5626	0.5681
714	3.00	.225	-27.5	3.00	0.0	006	0.5736	0.5794
715	3.01	.226	0.0	3.00	5.0	.088	0.5606	0.5699
716	3.00	.225	0.0	3.00	-5.0	.099	0.6084	0.6076
717	3.01	.225	0.0	3.00	-10.0	.099	0.6339	0.6303
718	3.01	.225	0.0	3.00	-15.0	.103	0.6640	0.6557
719	3.01	.226	0.0	3.00	-20.0	.104	0.7088	0.6836
720	3.01	.226	0.0	2.00	0.0	.090	0.5862	0.5767
721	3.02	.226	0.0	4.00	0.0	.100	0.6067	0.6023
722	3.00	.225	0.0	5.00	0.0	.094	0.6020	0.5913
723	3.01	.226	0.0	6.00	0.0	.089	0.6037	0.5858
724	2.53	.190	0.0	6.00	-20.0	.084	0.4982	0.4822
726	2.53	.189	5.0	8.00	-5.0	.256	0.4723	0.5956*
728	2.99	.224	-5.0	3.00	-5.0	.165	0.6016	0. 38
730	2.99	.224	-5.0	6.00	5.0	.267	0.6226	0.6521
731	1.95	.147	0.0	5.00	-10.0	.249	0.2982	0.2795
732	2.49	.187	-27.5	3.00	-10.0	-.010	0.4080	0.3995
733	3.00	.225	-5.0	3.00	-5.0	.100	0.6065	0.6105
735	1.97	.148	-27.5	3.00	-10.0	.079	0.2816	0.3035
736	3.00	.225	-20.0	3.00	5.0	.094	0.5629	0.5618
737	3.00	.225	-27.5	6.00	-10.0	.141	0.7921	0.8069
738	1.99	.149	-10.0	3.00	-15.0	.137	0.3060	0.2817
741	2.48	.186	0.0	3.00	-5.0	.132	0.4215	0.4196
743	2.53	.190	5.0	8.00	-10.0	.273	0.5742	0.6442*
744	2.04	.153	-10.0	3.00	-10.0	.092	0.3032	0.2859
746	3.01	.226	-5.0	5.00	-20.0	.242	0.7352	0.7591
747	3.01	.226	-5.0	3.00	-5.0	.086	0.5973	0.6048
749	3.07	.230	-10.0	6.00	-5.0	.166	0.7332	0.7435
750	2.57	.193	5.0	5.00	0.0	.129	0.4463	0.4537
751	2.57	.193	-10.0	6.00	0.0	.067	0.4221	0.3952
752	2.07	.155	-27.5	3.00	-20.0	-.018	0.2744	0.2740
754	2.00	.150	5.0	6.00	0.0	.257	0.2863	0.3299
755	2.14	.160	-15.0	3.00	5.0	.120	0.2811	0.2765
757	2.51	.188	0.0	8.00	-20.0	.339	0.7416	0.5706*
758	2.51	.189	-15.0	6.00	-15.0	.062	0.4431	0.4517
759	2.51	.188	5.0	6.00	-10.0	.280	0.5531	0.5181
760	3.00	.225	-5.0	3.00	-5.0	.094	0.6094	0.6049
761	3.00	.225	-15.0	5.00	0.0	.257	0.6409	0.6500
763	2.51	.188	-20.0	7.00	0.0	.301	0.4649	0.4405
764	2.99	.224	0.0	5.00	-5.0	.103	0.6287	0.6295
765	2.99	.224	-5.0	5.00	-15.0	.183	0.7014	0.7701*
766	2.02	.151	0.0	5.00	5.0	.372	0.2068	0.3409*

TABLE A-27 (cont'd)

MEASURED AND FITTED YAW MØMENT
BETA=20.DEG

RUN	CV	W	PHI	THETA	PSI	ZT	MEASURED	FITTED
769	2.51	.188	-10.0	8.00	-15.0	.234	0.5913	0.6166
771	3.00	.225	-10.0	2.00	5.0	.107	0.5744	0.5477
772	3.00	.225	-25.0	5.00	-10.0	.151	0.7550	0.7921
773	2.98	.224	-5.0	3.00	-5.0	.103	0.5959	0.6014
774	2.49	.186	-10.0	4.00	0.0	.251	0.4454	0.4123
775	2.98	.224	-10.0	6.00	-5.0	.176	0.6982	0.7049
777	2.49	.187	5.0	8.00	-10.0	.330	0.5949	0.5922
780	2.97	.223	-25.0	6.00	-5.0	.212	0.7389	0.7222
781	2.48	.186	-25.0	5.00	-20.0	.104	0.6147	0.6081

MEAN ERRØR= 0.0012
STANDARD DEVIATIØN= 0.0216

APPENDIX B

The measured dimensionless hydrodynamic forces and moments acting on the three prismatic hulls used in this study are listed in Appendix A in the balance coordinates shown in Figure 1. To obtain corresponding results in hull fixed coordinates, the following transformation is used for the force components:

$$\begin{bmatrix} X'_H \\ Y'_H \\ Z'_H \end{bmatrix} = C \begin{bmatrix} X'_S \\ Y'_S \\ Z'_S \end{bmatrix} \text{, where } C = \begin{bmatrix} \cos\theta & 0 & -\sin\theta \\ \sin\varphi\sin\theta & \cos\varphi & \sin\varphi\cos\theta \\ \cos\varphi\sin\theta & -\sin\varphi & \cos\varphi\cos\theta \end{bmatrix} \tag{B-1}$$

in which subscript "H" denotes hull fixed coordinates, subscript "S" denotes balance coordinates, and φ and θ are the pitch and roll angles, respectively. If $(x'_{RS}, y'_{RS}, z'_{RS})$ are the dimensionless coordinates of the balance axes origin in hull coordinates, the corresponding transformation of moments is given by

$$\begin{bmatrix} K'_H \\ M'_H \\ N'_H \end{bmatrix} = C \begin{bmatrix} K'_S \\ M'_S \\ N'_S \end{bmatrix} + \begin{bmatrix} y'_{RS}Z'_H - z'_{RS}Y'_H \\ z_{RS}X'_H - x'_{RS}Z'_H \\ z'_{RS}Y'_H - y'_{RS}X'_H \end{bmatrix} \tag{B-2}$$

where

$$x'_{RS} = -\xi'_R + \zeta'_S \sin\theta$$

$$y'_{RS} = -(\zeta'_P + \zeta'_S \cos\theta)\sin\varphi$$

$$z'_{RS} = -\zeta'_R - (\zeta'_P + \zeta'_S \cos\theta)\cos\varphi$$

For the balance setup used in these tests, and taking the hull fixed coordinate origin at the transom-keel intersection,

$$\xi'_R = 1.333 \qquad \zeta'_S = 1.042 \qquad \zeta'_P = 0.25 \qquad \zeta'_R = 0.125$$

which are shown in Figure 1.

The hydrodynamic forces and moments for symmetric and nonsymmetric steady planing were assumed to be functions of the following dimensionles trajectory variables:

u' = surge velocity in hull fixed coordinates,
v' = sideslip velocity in hull fixed coordinates,
ω' = turning rate in earth fixed coordinates,
φ = roll angle,
θ = pitch angle, and
z_T' = draft at transom-keel intersection.

The trajectory variables used in the tests and listed in Appendix A were:

C_V = planing speed coefficient,

ω' = turning rate in earth fixed coordinates,

φ = roll angle,

θ = pitch angle,

β = sideslip angle, and

z_T' = draft at transom-keel intersection.

To obtain z_T' from the measured vertical translation ζ_o' of the free-to-heave apparatus, the following transformation was used:

$$z_T' = \zeta_o' - \xi_R' \sin\theta - \zeta_R'(1-\cos\varphi\cos\theta) - \zeta_P'(1-\cos\theta) \qquad \text{(B-3)}$$

The relationship between the curve fitting variables and the test variables is given by

$$\begin{aligned} p' &= -\omega'\sin\theta \\ q' &= \omega'\sin\varphi\cos\theta \\ r' &= \omega'\cos\varphi\cos\theta \\ u' &= C_V\cos\theta\cos\beta + z_{RS}'q' - y_{RS}'r' \\ v' &= C_V(\sin\varphi\sin\theta\cos\beta - \cos\varphi\sin\beta) + x_{RS}'r' - z_{RS}'p' \end{aligned} \qquad \text{(B-4)}$$

where C_V is simply the dimensionless carriage speed in the straight course tests while for the circular course tests

$$C_V = R'\omega'$$

where R' is the dimensionless turning radius to the balance center.

The fitting functions were obtained by using a Taylor Series Expansion about a chosen reference point, in the trajectory variable space $(u',v',\omega',\varphi,\theta,z_T')$. In general, a Taylor Series Expansion of a scalar valued function f in an n-dimensional space $(x_i; i=1,2,\ldots,n)$ about a given point $(x_i=\xi_i;\ i=1,2,\ldots,n)$ is given by

$$f(x_i; i=1,2,\ldots,n)=\sum_{j=0}^{\infty}\frac{1}{j!}\left[\sum_{k=1}^{n}(x_k-\xi_k)\frac{\partial}{\partial\xi_k}\right]^j f(\xi_i;\ i=1,2,\ldots,n) \qquad \text{(B-5)}$$

This expansion was truncated at third order terms. In addition, the centerline plane was assumed to be a plane of symmetry so that X_S', Z_S' and M_S' contained only even order combinations of (v',ω',φ) while Y_S', K_S' and N_S' contained only odd order combinations. The expansion point was arbitrarily chosen as

$$(C_V,\omega',\varphi,\theta,\beta,z_T') = (4,0,0,3,0,0.1) \qquad \text{(B-6)}$$

or

$$(u',v',\omega',\varphi,\theta,z_T')= (3.9945,0,0,0,3,0.1)$$

The resulting families of fitting functions are listed in tables B-1 and B-2 for X_S',Z_S',M_S' and Y_S',K_S',N_S', respectively.

In the circular course tests, the forces and moments at the balance were effected by the centrifugal force acting on the portion of the apparatus below the balance, in addition to the hydrodynamic forces acting on the model. This centrifugal force contribution was accounted for by including one additional term in the fitting functions, defined as the corresponding component due to centrifugal force on the apparatus. These functions are given by

$$\begin{aligned}
X_S' &: \quad f_{45} = -2C_{\Delta a}\omega' v' \\
Y_S' &: \quad g_{42} = 2C_{\Delta a}\omega' u'/\cos\theta \\
Z_S' &: \quad f_{45} = 0 \qquad\qquad \text{(B-7)} \\
K_S' &: \quad g_{42} = -2z_a' C_{\Delta a}\omega' u'/\cos\theta \\
M_S' &: \quad f_{45} = -2z_a' C_{\Delta a}\omega' v' \\
N_S' &: \quad g_{42} = 2x_a' C_{\Delta a}\omega' u'/\cos\theta
\end{aligned}$$

where $C_{\Delta a}, x'_a, z'_a$ are the load coefficient and center of gravity location in balance coordinates, of the portion of apparatus below the balance center. These weights and dimensions were found to be

β_H	$C_{\Delta a}$	x'_a	z'_a
10°	1.221	0.32	0.827
15	1.252	0.32	0.827
20	1.289	0.307	0.813

where half the balance has been included and the change in CG location with roll and pitch angles was neglected. It is seen that the centrifugal force on the apparatus affects only the term j=33 in the fitting functions for X'_S and M'_S so that these coefficients must be corrected by

$$B_{X33} = B'_{X33} - (B'_{X45} - 1)2C_{\Delta a}$$

$$B_{M33} = B'_{M33} - (B'_{X45} - 1)2z'_a C_{\Delta a} \qquad \text{(B-8)}$$

where the prime denotes coefficients determined in the least squared fit while the unprimed B's are final values corrected for centrifugal force effects. For the case of Y'_S, K'_S and N'_S, the functional dependence of the centrifugal force effects above, was expanded in a Taylor Series expansion about the same expansion point as given in Eq.(B-6) and the corrections to the various fitting function coefficients were found to be

$$B_{Y26} = B'_{Y26} + (B'_{Y42} - 1)2C_{\Delta a}u'_o/\cos\theta_o$$

$$B_{Y27} = B'_{Y27} + (B'_{Y42} - 1)2C_{\Delta a}/\cos\theta_o$$

$$B_{Y29} = B'_{Y29} + (B'_{Y42} - 1)2C_{\Delta a}u'_o\sin\theta_o/\cos^2\theta_o \qquad \text{(B-9)}$$

$$B_{Y32} = B'_{Y32} + (B'_{Y42} - 1)2C_{\Delta a}\sin\theta_o/\cos^2\theta_o$$

$$B_{Y41} = B'_{Y41} + (B'_{Y42} - 1)2C_{\Delta a}u'_o(1 + \sin^2\theta_o)/2\cos^3\theta \quad .$$

where u'_o and θ_o are values of u' and θ at the expansion point. The corresponding corrections for K'_S and N'_S are obtained by multiplying the Y'_S correction by $-z'_a$ and x'_a, respectively.

TABLE B-1

FITTING FUNCTIONS FOR
LONGITUDINAL AND VERTICAL FORCES AND PITCH MOMENT

j	$f_j(u',v',\omega',\varphi,\theta,z_T')$	j	$f_j(u',v',\omega',\varphi,\theta,z_T')$
1	1	23	$\tilde{\theta}^3$
2	$\tilde{u}$	24	$\tilde{u}v'^2$
3	$\tilde{z}$	25	$\tilde{u}v'\varphi$
4	$\tilde{\theta}$	26	$\tilde{u}\varphi^2$
5	$\tilde{u}^2$	27	$\tilde{z}v'^2$
6	$\tilde{u}\tilde{z}$	28	$\tilde{\theta}v'^2$
7	$\tilde{u}\tilde{\theta}$	29	$\tilde{z}v'\varphi$
8	$\tilde{z}^2$	30	$\tilde{\theta}v'\varphi$
9	$\tilde{z}\tilde{\theta}$	31	$\tilde{z}\varphi^2$
10	$\tilde{\theta}^2$	32	$\tilde{\theta}\varphi^2$
11	v'^2	33	$v'\omega'$
12	$v'\varphi$	34	ω'^2
13	φ^2	35	$\varphi\omega'$
14	$\tilde{u}^3$	36	$\tilde{u}v'\omega'$
15	$\tilde{u}^2\tilde{z}$	37	$\tilde{u}\omega'^2$
16	$\tilde{u}^2\tilde{\theta}$	38	$\tilde{u}\varphi\omega'$
17	$\tilde{u}\tilde{z}^2$	39	$\tilde{z}v'\omega'$
18	$\tilde{u}\tilde{z}\tilde{\theta}$	40	$\tilde{\theta}v'\omega'$
19	$\tilde{u}\tilde{\theta}^2$	41	$\tilde{z}\omega'^2$
20	$\tilde{z}^3$	42	$\tilde{\theta}\omega'^2$
21	$\tilde{z}^2\tilde{\theta}$	43	$\tilde{z}\varphi\omega'$
22	$\tilde{z}\tilde{\theta}\varphi$	44	$\tilde{\theta}\varphi\omega'$

where

$$\tilde{u} = u' - 3.9945$$
$$\tilde{z} = z_T' - 0.1$$
$$\tilde{\theta} = \theta - 3$$

TABLE B-2

FITTING FUNCTIONS FOR
SIDE FORCE AND ROLL AND YAW MOMENTS

j	$g_j(u', v', \omega', \varphi, \theta, z_T')$	j	$g_j(u', v', \omega', \varphi, \theta, z_T')$
1	1	21	$\tilde{\theta}^2 v'$
2	v'	22	$\tilde{z}^2 \varphi$
3	φ	23	$\tilde{z}\tilde{\theta}\varphi$
4	$\tilde{u}v'$	24	φ^3
5	$\tilde{u}\varphi$	25	$\theta^2\varphi$
6	$\tilde{z}v'$	26	ω'
7	$\tilde{\theta}v'$	27	$\tilde{u}\omega'$
8	$\tilde{z}\varphi$	28	$\tilde{z}\omega'$
9	$\tilde{\theta}\varphi$	29	$\tilde{\theta}\omega'$
10	$\tilde{u}^2 v'$	30	$\tilde{u}^2\omega'$
11	$\tilde{u}^2\varphi$	31	$\tilde{u}\tilde{z}\omega'$
12	$\tilde{u}\tilde{z}v'$	32	$\tilde{u}\tilde{\theta}\omega'$
13	$\tilde{u}\tilde{\theta}v'$	33	$v'^2\omega'$
14	$\tilde{u}\tilde{z}\varphi$	34	$v'\omega'^2$
15	$\tilde{u}\tilde{\theta}\varphi$	35	$v\varphi\omega'$
16	v'^3	36	ω'^3
17	v'^2	37	$\varphi\omega'^2$
18	$\tilde{z}^2 v'$	38	$\tilde{z}^2\omega'$
19	$\tilde{z}\tilde{\theta}v'$	39	$\tilde{z}\tilde{\theta}\omega'$
20	$v'\varphi^2$	40	$\varphi^2\omega'$
		41	$\theta^2\omega'$

APPENDIX C

COEFFICIENTS OF LEAST SQUARED FITS

The empirical coefficients for the fitting functions described in Appendix B were evaluated by the least squared error technique for the forces and moments tabulated in Appendix A. The approach used in applying the least squares technique is described in the main text of this report. The data points not used in the final step of this approach are marked with an asterisk in the listings in Appendix A.

Also, in applying the least squares technique it was found that using all terms (45 for X_S', M_S' and 42 for $Y_S', K_S' N_S'$) led to ill-conditioned matrices due to the close correlation between the centrifugal force term and term 33 in X_S' and M_S' and term 27 in Y_S', K_S' and N_S'. Consequently, these two coefficients were set equal to zero and deleted from the fitting procedure. The resulting coefficients were then corrected for centrifugal force effects as described in Appendix B. The final, corrected values of the coefficients are listed in Tables C-1 through C-6.

Using the fitting functions f_j and g_j listed in Tables B-1 and B-2, the dimensionless hydrodynamic forces and moments acting on the hull, relative to balance coordinates are given by

$$X_S' = \sum_{j=1}^{44} B_{Xj} f_j \qquad K_S' = \sum_{j=1}^{41} B_{Kj} g_j$$

$$Y_S' = \sum_{j=1}^{41} B_{Yj} g_j \qquad M_S' = \sum_{j=1}^{44} B_{Mj} f_j \qquad \text{(C-1)}$$

$$Z_S' = \sum_{j=1}^{44} B_{Zj} f_j \qquad N_S' = \sum_{j=1}^{41} B_{Nj} g_j$$

TABLE C-1

COEFFICIENTS FOR ALL TERM FIT

BETA = 10.

J	X	Z	M
1	-.1300E+00	-.6040E+00	-.2350E+00
2	-.6230E-01	-.2240E+00	-.1120E+00
3	-.1470E+01	-.7390E+01	.3420E+01
4	.9530E-02	-.6230E-01	-.2120E+00
5	-.9100E-02	.7530E-02	-.2570E-01
6	-.6820E+00	-.1800E+01	-.7830E-01
7	.2760E-02	-.3860E-01	-.7770E-01
8	-.1070E+01	.4290E+01	.5240E+02
9	.1620E+00	.6640E-01	-.2830E+01
10	-.1030E-01	-.2910E-01	-.1460E-02
11	-.9290E-02	-.3820E-01	-.2730E-01
12	.4580E-04	.2640E-01	.1150E-01
13	-.2230E-03	-.1090E-02	.1080E-03
14	.1140E-03	.1260E-01	.8480E-03
15	-.6540E-01	.8410E-01	-.4710E+00
16	.7350E-04	-.1730E-02	-.1870E-02
17	.1850E+01	.2080E+02	.1380E+02
18	.2440E-01	-.2890E+00	-.6880E+00
19	-.9480E-03	-.2260E-02	.5910E-03
20	.1320E+02	.4590E+02	-.6650E+02
21	.7030E+00	.9060E+01	.1800E+01
22	-.4730E-01	-.2110E+00	.1810E+00
23	.1550E-02	.2440E-02	.8550E-03
24	.8340E-03	-.3990E-01	-.5700E-01
25	-.6540E-03	-.3650E-02	-.2140E-02
26	-.1830E-03	-.1000E-02	-.3640E-03
27	.2020E-01	-.3620E+00	-.1410E+00
28	-.1250E-02	.4260E-02	-.9770E-02
29	.7800E-03	.2360E+00	.6320E-01
30	.7520E-03	.6210E-02	.5170E-02
31	-.6310E-03	.7340E-03	.1470E-01
32	-.8290E-05	-.1310E-03	-.8520E-04
33	-.2308E+00	.5190E-01	-.2571E+00
34	-.4270E+00	-.3620E+01	-.1170E+01
35	.1970E-01	.4260E-01	.4910E-01
36	.2060E-01	.3270E+00	.6510E+00
37	-.7580E+00	-.4030E+01	-.1800E+01
38	.4000E-02	.3020E-02	.4370E-01
39	-.1180E+01	-.1900E+01	-.1150E+01
40	.3020E-01	.2920E+00	.1320E+00
41	-.6420E-01	-.2230E+02	-.3740E+01
42	.1620E-01	-.4620E+00	-.1830E+00
43	.6720E-01	.2640E-01	.4080E+00
44	-.5050E-02	-.4030E-01	.1320E-01

TABLE C-2

COEFFICIENTS FØR ALL TERM FIT

BETA = 10.

J	Y	K	N
1	.0000E+00	.0000E+00	.0000E+00
2	-.2270E+00	.1420E+00	.5550E-01
3	.6310E-02	-.1600E-01	.8630E-03
4	-.6740E-01	.5910E-01	.3660E-01
5	.2950E-02	-.6370E-02	-.1660E-02
6	-.3770E+01	.3230E+01	.6810E+00
7	.1470E-01	-.1270E-01	.4000E-01
8	.8920E-01	-.1090E+00	.2240E-01
9	.9900E-03	-.5460E-02	-.1270E-02
10	.7870E-04	-.6140E-02	.2750E-02
11	-.3600E-03	-.5560E-03	-.4100E-03
12	-.9370E+00	.9760E+00	.7100E+00
13	-.1030E-02	-.4360E-04	.8130E-02
14	.3360E-01	-.5660E-01	-.1330E-01
15	.1120E-04	-.1700E-02	.2360E-03
16	.9830E-02	-.2660E-02	-.4190E-02
17	-.2250E-04	-.1320E-02	-.2170E-04
18	-.1490E+02	.1390E+02	.3750E+00
19	.1890E+00	-.9860E-01	.5070E+00
20	-.5920E-03	.1040E-02	-.3470E-04
21	-.3690E-03	-.1550E-02	-.4200E-02
22	.1300E+00	.3210E+00	.1140E+00
23	-.2840E-02	-.3200E-01	-.5120E-02
24	.2560E-04	-.8630E-05	.1140E-05
25	-.1780E-03	.8770E-03	.3750E-03
26	.9080E+00	-.7400E+00	-.4900E-01
27	.3390E+00	-.2220E+00	.6950E-01
28	.4710E+01	-.3440E+01	-.8080E-01
29	.5910E-01	.3400E-02	-.1320E-01
30	.3810E-01	-.5550E-01	-.5930E-02
31	.2330E+01	-.2360E+01	-.1470E+01
32	.4930E-01	-.5430E-01	-.1620E-01
33	-.2360E+00	.2750E+00	.1210E+00
34	.9100E+00	-.8940E+00	-.2140E+00
35	.3720E-02	.3120E-02	-.8030E-02
36	-.2770E+01	.4520E+01	.5170E+01
37	-.1520E-01	-.2840E-01	-.3850E-02
38	.3310E+02	-.1660E+02	-.1420E+02
39	-.1550E+00	-.1600E+00	-.4100E+00
40	.9760E-03	-.1340E-02	.4430E-03
41	.6920E+00	-.4520E+00	.1430E+00

TABLE C-3

COEFFICIENTS FOR ALL TERM FIT

BETA = 15.

J	X	Z	M
1	-.1200E+00	-.4730E+00	-.2890E+00
2	-.5480E-01	-.1930E+00	-.5790E-01
3	-.1380E+01	-.7520E+01	.4820E+00
4	.1720E-01	-.4700E-01	-.1000E+00
5	-.1210E-01	.3530E-02	-.4540E-02
6	-.6420E+00	-.1720E+01	.6920E+00
7	.4640E-02	-.2910E-01	-.1600E-01
8	-.9530E+00	.5060E+01	.5200E+02
9	.1520E+00	.1440E+00	-.1400E+01
10	-.7800E-02	-.2730E-01	-.3420E-02
11	-.1330E-01	.4520E-01	-.3860E-01
12	-.3640E-03	.2890E-01	.1020E-01
13	-.1560E-03	-.4370E-03	-.8970E-04
14	-.5070E-03	.1150E-01	-.7940E-03
15	-.7660E-01	.1540E+00	.1490E+00
16	.8650E-03	.9320E-02	.1060E-01
17	-.2830E+00	.7880E+01	.1520E+02
18	.3660E-01	-.7970E-01	-.3070E+00
19	-.8710E-03	.3550E-02	-.3720E-02
20	-.1590E+01	.9550E-01	-.2760E+02
21	.3880E+00	.3710E+01	-.8320E-01
22	-.3480E-01	-.1470E+00	.6120E-03
23	.9860E-03	.5990E-02	-.5290E-04
24	.4190E-02	-.3000E-01	-.4680E-01
25	-.1060E-03	-.3100E-02	-.2190E-02
26	-.8600E-04	.3420E-03	-.3080E-03
27	.7870E-02	.6100E+00	.1150E-01
28	.3710E-02	-.1330E+00	.8660E-02
29	.4340E-02	.2440E+00	.1150E+00
30	.5490E-03	-.1930E-02	-.4520E-03
31	-.1040E-03	.6880E-02	.1120E-01
32	-.7930E-05	-.1470E-03	-.2080E-03
33	-.1072E+00	-.4840E+00	.1292E+00
34	-.4320E-01	-.2780E+01	-.5460E+00
35	.8250E-02	.6070E-02	-.3920E-02
36	-.1380E-01	-.4330E-01	.2970E+00
37	-.3920E+00	-.1180E+01	-.2130E+01
38	.1370E-02	.2030E-02	.1850E-01
39	-.3190E+00	.1910E+01	.1080E+02
40	-.1540E-01	-.2510E+00	-.1140E+00
41	-.3660E+01	-.2210E+02	.6990E+01
42	-.1200E+00	.3340E+00	-.5490E+00
43	-.6390E-01	-.1170E+00	-.9340E-01
44	.8380E-03	.2100E-03	.1860E-01

TABLE C-4

COEFFICIENTS FOR ALL TERM FIT

BETA = 15.

J	Y	K	N
1	.0000E+00	.0000E+00	.0000E+00
2	-.2720E+00	.2190E+00	.5830E-01
3	.3430E-02	-.1020E-01	.2190E-02
4	-.5190E-01	.4340E-01	.2130E-01
5	.2560E-02	-.5260E-02	-.4120E-03
6	-.3830E+01	.2640E+01	.6800E+00
7	.4920E-01	-.2740E-01	.4890E-02
8	.6120E-01	-.1200E+00	.3070E-01
9	.8420E-03	-.2300E-02	-.1290E-02
10	.5560E-02	-.2060E-01	.2720E-02
11	.1120E-03	-.7200E-03	.2070E-03
12	-.5640E+00	.3840E+00	.2560E+00
13	.5580E-02	-.1870E-01	-.5400E-02
14	.2130E-01	-.2880E-01	-.4510E-03
15	.6950E-03	-.1450E-02	-.1290E-03
16	.4260E-02	-.1160E-01	-.5240E-02
17	-.2040E-02	.1540E-02	.1740E-02
18	-.2060E+01	-.2590E+00	-.6000E+01
19	.2880E+00	-.1180E+00	.2150E+00
20	-.5680E-03	.8130E-03	.3050E-03
21	-.8940E-02	.2430E-02	.4380E-02
22	-.8700E-01	.2370E+00	.3140E+00
23	.1030E-01	-.1010E-01	-.1320E-01
24	.7500E-05	-.6290E-05	-.4780E-05
25	.2230E-03	-.1470E-03	-.3270E-04
26	.1018E+01	-.6630E+00	-.5970E+00
27	.2520E+00	-.3500E-01	.3400E-01
28	.4550E+01	-.2750E+01	.1240E+01
29	-.2450E-01	.1260E+00	.8100E-01
30	.3320E-01	.3140E-01	.1570E-01
31	.1230E+01	.7940E-01	.4930E+00
32	.3840E-01	.6420E-01	.3220E-01
33	-.2900E+00	.2720E+00	.1440E+00
34	.1420E+01	-.1280E+01	.8420E-01
35	.2390E-01	-.2850E-01	-.1280E-01
36	-.5140E+01	.8090E+01	.7020E+01
37	-.3960E-02	.1350E-01	-.2050E-01
38	.9250E+01	.1580E+02	.9850E+01
39	-.6880E+00	.3650E+00	.1060E+00
40	.1410E-03	.1470E-03	-.3080E-03
41	.5250E+00	-.7780E-01	.4510E-01

TABLE C-5

COEFFICIENTS FOR ALL TERM FIT

BETA = 20.

J	X	Z	M
1	-.1090E+00	-.3130E+00	-.2640E+00
2	-.4590E-01	-.9330E-01	-.6270E-01
3	-.1480E+01	-.6390E+01	-.1330E+01
4	.2310E-01	-.2070E-01	-.6100E-01
5	-.1180E-01	-.1640E-02	-.5840E-02
6	-.8080E+00	-.2150E+01	-.9720E-01
7	.7290E-02	-.2270E-01	-.3150E-01
8	-.6740E+00	-.5250E+01	.4000E+02
9	.2210E+00	.3250E+00	-.7060E+00
10	-.9780E-02	-.2610E-01	-.1950E-01
11	.2830E-02	.3770E-01	-.3040E-01
12	.1210E-02	.2220E-01	.7050E-02
13	-.1290E-03	-.3350E-03	-.8920E-04
14	-.4310E-02	.1350E-02	-.3410E-02
15	-.7520E-01	-.3110E+00	.1060E-01
16	-.1620E-02	.2710E-02	.3830E-02
17	.7330E-01	-.7590E-01	.8600E+01
18	.8500E-01	-.4790E-01	.2320E-01
19	-.2200E-02	-.4110E-03	.8320E-03
20	-.4460E+01	.5590E+01	-.3050E+02
21	.5270E+00	.1940E+01	.9400E+00
22	-.3860E-01	-.1960E+00	-.6790E-01
23	.9280E-03	.5360E-02	.4780E-02
24	-.2620E-02	-.4130E-01	-.5710E-01
25	.3270E-04	-.1940E-02	-.5290E-03
26	-.6260E-04	-.2830E-03	-.1400E-03
27	-.9130E-02	.1440E+01	-.2060E+00
28	-.3420E-02	-.3580E-01	-.1120E-01
29	.7630E-02	.2250E+00	.1870E-01
30	.4600E-04	-.9970E-03	.2200E-02
31	.1580E-05	.2110E-02	.7300E-02
32	-.5850E-05	-.1330E-03	-.1050E-03
33	-.2425E+00	-.5340E+00	-.1610E+00
34	-.2420E+00	-.2390E+01	-.1240E+01
35	.4070E-03	.1670E-01	-.1750E-01
36	.3410E-01	.1190E+00	.1750E-01
37	-.7800E+00	-.4060E+01	-.2080E+01
38	-.7480E-03	-.1250E-01	-.6950E-02
39	.2280E+00	-.8250E+01	-.3950E+01
40	.7230E-01	.2950E+00	.2680E+00
41	-.5010E+01	-.2250E+02	.4390E+01
42	-.7370E-01	-.2580E+00	-.5180E+00
43	-.4790E-01	-.3200E+00	-.1370E+00
44	.1510E-02	-.4020E-02	.1300E-01

TABLE C-6

COEFFICIENTS FOR ALL TERM FIT

BETA = 20.

J	Y	K	N
1	.0000E+00	.0000E+00	.0000E+00
2	-.2820E+00	.2220E+00	.9110E-01
3	.1280E-02	-.6980E-02	.1980E-02
4	-.6530E-01	.3980E-01	.2380E-01
5	.2000E-02	-.3180E-02	.2660E-03
6	-.4550E+01	.4030E+01	.8200E+00
7	.4110E-01	-.4290E-01	.2860E-01
8	.5970E-01	-.1040E+00	.1860E-01
9	.6480E-03	-.2530E-02	-.1370E-02
10	.4580E-02	-.1900E-01	-.1590E-02
11	-.1860E-04	-.5840E-03	.1450E-03
12	-.8580E+00	.5780E+00	.4330E+00
13	.8000E-02	-.1300E-01	-.3800E-02
14	.5640E-02	-.1890E-01	.4960E-02
15	.6170E-03	-.1960E-02	-.1500E-03
16	-.9240E-02	.4890E-01	.1020E-01
17	-.1040E-02	.5800E-02	-.1900E-03
18	-.1080E+01	.1840E+01	-.9810E+01
19	.2350E+00	-.4730E+00	.3750E+00
20	-.4560E-03	.8180E-03	.1780E-03
21	-.8350E-02	.5830E-02	-.3740E-02
22	-.5080E-01	.2080E+00	.2140E-01
23	.2690E-02	-.7380E-02	.6010E-03
24	.1060E-04	-.1820E-05	.3120E-06
25	.1660E-03	-.1740E-03	.2420E-03
26	.3180E+00	.3060E+00	-.9590E+00
27	.3380E-01	.1340E+00	.1270E-01
28	.5360E+01	-.4910E+01	.1560E+01
29	-.1020E+00	.1190E+00	.5120E-01
30	.1370E-01	-.2060E-01	.8000E-02
31	.7440E-02	-.9250E+00	-.3030E+00
32	-.1120E-01	-.3500E-01	.4730E-01
33	-.3240E+00	.1670E+00	.1400E+00
34	.1800E+01	-.2000E+01	-.3160E+00
35	.1210E-01	-.2200E-01	-.6180E-02
36	-.7160E+01	.6270E+01	.9570E+01
37	.5600E-01	.4790E-01	-.1510E-01
38	-.9380E+01	-.7620E+01	-.2000E+01
39	-.8710E+00	.1600E+01	.4720E+00
40	.1470E-02	.5060E-03	.2270E-03
41	.1030E+00	.2300E+00	.1940E-01

APPENDIX D

PROPULSION AND CONTROL SYSTEM RELATIONS

Propulsion and control of most recreational planing craft of interest in this study are propelled by a single unit, the outboard motor, which can be divided into four subsystems, namely, the torque-rpm relation for the engine, the thrust-torque-speed-rpm relation for the propeller, the side force and drag on the rudder and the geometrical relationship defining the propeller thrust direction and the rudder side force and drag directions. These relationships are described in this Appendix.

The torque-rpm relationship for the engine was obtained from a least-squared-error curve fit to non-dimensional measured data for six different size engines, which were supplied by one outboard manufacturer. The data are shown in Table D-1 and Figure 2. At each rpm, the measured torques were averaged giving the values shown in the table, then these averages were fitted with a quadratic in engine rpm giving the coefficients shown in Table D-1. The dimensionless values of torque predicted by this fit are shown in the table and plotted in Figure 2. The maximum fitting error compared with averaged torques is seen to be 3.1 percent of the average rated torque and the root mean square error of the fit is 1.2 percent of the average rated torque. The data scatter for the individual engines is seen to be larger than that of the averaged data and some engines are seen to be consistently higher or lower than the fit of the averaged data. Consequently, for accurate engine speed predictions with a particular engine it may be more appropriate to fit the data for that engine. The data shown in Table D-1 and Figure 2 were obtained with finely-tuned, new engines at full throttle. To simulate partial throttle settings of actual outboards, the rated horsepower HP_{ER} was reduced, with constant values of n_{ER}, b_1, b_2 and b_3. Additional engine data are needed to substantiate this assumption. Engine stall characteristics and high engine speed limitations should be included to complete the engine characterization. However, for the purposes of this study, the overall average fit was used

since engine speed per se was not essential but rather boat speed reduction at constant power in a turn was required.

The propeller characteristics were assumed to be given by the charts presented in Reference 7, for the case of no cavitation. The thrust coefficient, K_T , and torque coefficient, K_Q , for a pitch ratio of 1.2 were fitted with quadratic functions of propeller advance coefficient, J_P , as shown in Table D-2, for five different blade area ratios, BAR. The rms errors of the fits are seen to be well within acceptable limits (less than two percent of K_{To} and K_{Qo}, for example). It was assumed that the forces and moments due to the propeller were only the thrust force along the propeller axis and a torque about that axis. No interactions between rudder and propeller or between hull and propeller were included. The latter assumption is probably valid for outboard engines since the propeller is usually more than one diameter aft of the transom. The importance of propeller-rudder interactions however should be investigated further as well, as the significance of side or vertical forces on the propeller due to inclined flow. In both of these cases, there may be sufficient data available to estimate the importance of these effects.

The side force and drag on the rudder was assumed to be described by a lift coefficient C_{LR} and drag coefficient C_{DR} which were estimated from finite aspect ratio wing theory. The expressions used are

$$C_{LR} = \frac{2\pi A_R \alpha_R}{A_R + 2} \tag{D-1}$$

and

$$C_{DR} = C_{DoR} + \frac{C_{LR}^2}{\pi A_R} \tag{D-2}$$

where A_R was taken as the aspect ratio of the side elevation of the lower unit of the outboard motor, below the ventilation plate and α_R is the inflow angle of attack in a plane normal to the engine turning axis. The free water surface was assumed to have no effect on the rudder side force and drag as was the ventilation plate, the propeller and the hull. Measurements of actual rudder forces are needed to verify these assumptions.

To complete the description of the effects of this propulsion and control system, the geometric relationship defining the engine position, tilt

and turn are required. If $(\xi'_{TP},0,\zeta'_{TP})$ are the dimensionless coordinates of the engine tilt pin in hull axes (a single engine on centerline was assumed here), and if $(\xi'_{TA},0,\zeta'_{TA})$ are the distances at zero tilt angle (propeller shaft parallel to keel) from the tilt pin axis to the point of application of propeller thrust, parallel to the hull axes, then the hull coordinates (x'_T,y'_T,z'_T) of the point of application of propeller thrust are given by

$$\begin{aligned} x'_T &= \xi'_{TP} + \xi'_{TA}\cos\theta_P + \zeta'_{TA}\sin\theta_P \\ y'_T &= 0 \\ z'_T &= \zeta'_{TP} - \xi'_{TA}\sin\theta_P + \zeta'_{TA}\cos\theta_P \end{aligned} \tag{D-3}$$

where θ_P is the engine tilt angle, positive for lower unit forward. Then letting $(\xi'_{RP},0,\zeta'_{RP})$ represent the distance from the point of thrust application to the point of rudder force application, the hull coordinates (x'_R,y'_R,z'_R) of the point of application of rudder forces are given by

$$\begin{aligned} x'_R &= x'_T + \xi'_{RP}\cos\theta_P\cos\psi_P + \zeta'_{RP}\sin\theta_P \\ y'_R &= y'_T - \xi'_{RP}\sin\psi_P \\ z'_R &= z'_T - \xi'_{RP}\sin\theta_P\cos\psi_P + \zeta'_{RP}\cos\theta_P \end{aligned} \tag{D-4}$$

where ψ_P is the engine turn angle such that a positive ψ_P results in a turn to starboard. With (u',v',w') denoting the hull velocity components and (p',q',r') denoting the hull rotational velocity components in hull fixed axes, the corresponding velocity components at the propeller are given by

$$\begin{aligned} u'_P &= u' + z'_T q' - y'_T r' \\ v'_P &= v' + x'_T r' - z'_T p' \\ w'_P &= w' + y'_T p' - x'_T q' \end{aligned} \tag{D-5}$$

while at the rudder the corresponding velocity components are given by

$$\begin{aligned} u'_R &= u' + z'_R q' - y'_R r' \\ v'_R &= v' + x'_R r' - z'_R p' \\ w'_R &= w' + y'_R p' - x'_R q' \end{aligned} \tag{D-6}$$

The propeller speed of advance was taken as the velocity component parallel to the propeller axis at (x_T', y_T', z_T') which is given by

$$V_{PA}' = u_P'\cos\theta_P\cos\psi_P - v_P'\sin\psi_P - w_P'\sin\theta_P\cos\psi_P \tag{D-7}$$

which leads to the propeller advance coefficient J_P in the form

$$J_P = 2\pi V_{PA}'/\omega_P' D_P' \tag{D-8}$$

where ω_P' is the dimensionless propeller rotational speed and D_P' is the dimensionless propeller diameter. Once J_P is defined, the propeller thrust and torque coefficients can be calculated from the results shown in Table D-2 and the corresponding dimensionless thrust and torque are given by

$$\begin{aligned} T_P' &= \omega_P'^2 D_P'^4 K_T/2\pi^2 \\ Q_P' &= -\omega_P'^2 D_P'^5 K_Q/2\pi^2 \end{aligned} \tag{D-9}$$

The corresponding forces and moments in hull coordinates then are obtained from

$$\begin{aligned} X_P' &= T_P'\cos\theta_P\cos\psi_P \\ Y_P' &= -T_P'\sin\psi_P \\ Z_P' &= -T_P'\sin\theta_P\cos\psi_P \\ K_P' &= Q_P'\cos\theta_P\cos\psi_P + y_T'Z_P' - z_T'Y_P' \\ M_P' &= -Q_P'\sin\psi_P + z_T'X_P' - x_T'Z_P' \\ N_P' &= -Q_P'\sin\theta_P\cos\psi_P + x_T'Y_P' - y_T'X_P' \end{aligned} \tag{D-10}$$

Similarly, the rudder speed of advance is given by

$$V_{RA}' = u_R'\cos\theta_P\cos\psi_P - v_R'\sin\psi_P - w_R'\sin\theta_P\cos\psi_P \tag{D-11}$$

and the velocity component normal to the rudder centerline plane at the point (x_R', y_R', z_R') is given by

$$V_{RN}' = u_R'\cos\theta_P\sin\psi_P + v_R'\cos\psi_P - w_R'\sin\theta_P\sin\psi_P \tag{D-12}$$

so that the rudder angle of attack is

$$\alpha_R = \arctan\,(V_{RN}'/V_{RA}') \tag{D-13}$$

from which the lift and drag coefficients can be calculated using Eqs.(D-1) and (D-2). The corresponding dimensionless lift and resistance are

$$L_R' = -(V_{RN}'^2 + V_{RA}'^2)S_R'C_{LR}$$
$$R_R' = -(V_{RN}' + V_{RA}'^2)S_R'(C_{DoR} + C_{LR}^2/\pi A_R) \qquad \text{(D-14)}$$

which are assumed to act normal and parallel to the inflow velocity component in a plane normal to the engine turn axis. The normal and drag force components are then

$$N_{FR}' = R_R'\sin\alpha_R + L_R'\cos\alpha_R$$
$$D_{FR}' = R_R'\cos\alpha_R - L_R'\sin\alpha_R \qquad \text{(D-15)}$$

acting normal and parallel to the rudder centerline plane, at the point (x_R', y_R', z_R'). Finally, the corresponding force and moment components in hull coordinates are given by

$$X_R' = D_{FR}'\cos\theta_P\cos\psi_P + N_{FR}'\cos\theta_P\sin\psi_P$$
$$Y_R' = -D_{FR}'\sin\psi_P + N_{FR}'\cos\psi_P$$
$$Z_R' = -D_{FR}'\sin\theta_P\cos\psi_P - N_{FR}'\sin\theta_P\sin\psi_P \qquad \text{(D-16)}$$
$$K_R' = y_R'Z_R' - z_R'Y_R'$$
$$M_R' = z_R'X_R' - x_R'Z_R'$$
$$N_R' = x_R'Y_R' - y_R'X_R'$$

The engine speed ω_E' is determined by the propeller speed ω_P' and the gear ratio γ_E in the form

$$\omega_E' = \gamma_E\omega_P' \qquad \text{(D-17)}$$

and the engine torque is then given by

$$Q_E' = Q_{ER}'\left[1 + b_1 + b_2\left(\frac{\omega_E'-\omega_{ER}'}{\omega_{ER}'}\right) + b_3\left(\frac{\omega_E'-\omega_{ER}'}{\omega_{ER}'}\right)^2\right] \qquad \text{(D-18)}$$

where ω_{ER}' is the dimensionless engine speed at the rated rpm and Q_{ER}' is given by

$$Q_{ER}' = HP_{ER}'/\omega_{ER}' \qquad \text{(D-19)}$$

where HP_{ER}' is the dimensionless rated power, for the case of full throttle or a reduced value for partial throttle settings.

TABLE D-1

MEASURED TORQUE-SPEED CHARACTERISTICS
FOR OUTBOARD ENGINES

$$\text{Dimensionless Torque} = \frac{Q_E - Q_{ER}}{Q_{ER}}$$

$\frac{n_E - n_{ER}}{n_{ER}}$	-0.6	-0.5	-0.4	-0.3	-0.2	-0.1	0	0.1	0.2
Engine									
A	-0.131	-0.124	-0.062	-0.024	-0.088	-0.105	-0.136	-0.176	
B	-0.265	-0.219	-0.156	-0.057	0	0.008	-0.040	-0.105	
C	-0.288	-0.170	-0.064	0.142	0.067	0.085	0.038	-0.057	
D	-0.147	-0.094	0.019	0.041	0	-0.059	-0.112	-0.182	-0.221
E	-0.478	-0.148	-0.044	0.068	0.087	0.053	-0.026	-0.122	-0.210
F	-0.383	-0.254	-0.223	-0.124	-0.092	-0.112	-0.087	-0.122	-0.228
Average	-0.282	-0.168	-0.088	0.007	-0.004	-0.022	-0.060	-0.127	-0.220
Fit	-0.281	-0.164	-0.078	-0.024	-0.002	-0.011	-0.052	-0.124	-0.228
Error	-0.001	-0.004	-0.010	0.031	-0.002	-0.011	-0.008	-0.003	0.008

RMS Error = 0.012

n_E = engine speed (rpm)

Q_E = engine torque (ft-lb)

n_{ER} = engine speed at rated power = 5000 rpm

Q_{ER} = engine torque at rated power given by

$$Q_{ER} = \frac{33000 \times HP_{ER}}{2\pi n_{ER}}$$

HP_{ER} = rated power.

$$\frac{Q_E - Q_{ER}}{Q_{ER}} = b_1 + b_2\left(\frac{n_E - n_{ER}}{n_{ER}}\right) + b_3\left(\frac{n_E - n_{ER}}{n_{ER}}\right)^2$$

$b_1 = -0.05170$

$b_2 = -0.5658$

$b_3 = -1.5803$

TABLE D-2

PROPELLER THRUST AND TORQUE

NO CAVITATION, PITCH RADIUS = 1.2

BAR	K_{To}	K_{TJ}	K_{TJJ}	RMS Error	K_{Qo}	K_{QJ}	K_{QJJ}	RMS Error
0.50	0.317	-0.04754	0.0001786	0.0026	0.0580	-0.008286	0.0001429	0.00044
0.65	0.339	-0.05739	0.0008928	0.0037	0.0620	-0.009536	0.0001786	0.00034
0.80	0.349	-0.06025	0.0008929	0.0020	0.0670	-0.01125	0.0003214	0.00015
0.95	0.367	-0.06754	0.001607	0.0014	0.0703	-0.01275	0.0004821	0.00026
1.10	0.397	-0.08289	0.003393	0.0026	0.0754	-0.01397	0.0005714	0.00032

$$K_T = K_{To} + J_p K_{TJ} + J_p^2 K_{TJJ}$$

$$K_Q = K_{Qo} + J_p K_{QJ} + J_p^2 K_{QJJ}$$

APPENDIX E

APPLICATIONS

Three applications of the relations derived in this study were carried out and the equations used and results obtained are described in this section. Equilibrium conditions for straight course operation were calculated from pitch and heave equilibrium. At these equilibrium conditions the directional stability was calculated for the case of fixed roll. Finally, turning equilibrium conditions were calculated with six-degrees-of-freedom together with engine-propeller torque equilibrium.

To find the straight course equilibrium condition, the dimensionless heave and pitch equations in hull fixed coordinates are given by

$$Z_H' + 2C_\Delta \cos\theta = 0$$
$$M_H' - 2C_\Delta (x_G' \cos\theta + z_G' \sin\theta) = 0 \qquad \text{(E-1)}$$

where C_Δ is the planing load coefficient and $(x_G', 0, z_G')$ are the coordinates of the center of gravity in hull coordinates. The heave force Z_H' and pitch moment M_H' can be evaluated using the transformation shown in Eqs. (B-1) and (B-2) where X_S', Z_S' and M_S' are given by the least-squared-error fits described in Appendix C. The parameters describing the straight course equilibrium are $(C_V, \theta, C_\Delta, z_T')$ so by specifying two of these parameters, the remaining two values at equilibrium can be calculated from Eqs. (E-1). Since these equations are nonlinear, an iterative solution technique was developed using the Newton-Raphson technique to update an initial guess at the unknown values. It was found that the numerical solution technique was most often successful when C_Δ and z_T' were considered unknown and C_V and θ were specified. A series of calculations were carried out for the three deadrises tested and for center of gravity location given by

$$x_G' = 0.8, \quad 1.2, \quad 1.6$$
$$z_G' = -0.5, \ -0.75, -1.0$$

The results are shown in Tables E-1 through E-24. Also shown is the dimensionless effective horsepower, EHP, obtained from the relation

$$EHP = |X_S'|C_V \tag{E-2}$$

evaluated at the equilibrium condition. (For the present illustration, no correction is included for extrapolating these drag data to full-scale Reynolds numbers.)

Although the data listed in Appendix A and the least squared error fits described in Appendix C require additional analysis as described in the main text, the usefulness of the final results in the design of recreational planing craft can be demonstrated by the following design problem. Suppose a designer wishes to evaluate the equilibrium trim, draft and power for a craft with the following characteristics:

Beam, ft	6
Deadrise, deg	15
LCG, ft fwd of transom	7.2
VCG, ft above baseline	3.0
Speed, knots	41
Weight, lb	2800

The corresponding dimensionless quantities are evaluated as follows:

$$x_G' = 7.2 \text{ ft}/6 \text{ ft} = 1.2$$

$$z_G' = -3.0 \text{ ft}/6 \text{ ft} = -0.5$$

$$C_V = 41.0 \text{ knots} \times 1.689 \frac{\text{ft/sec}}{\text{knot}} / \sqrt{32.2 \frac{\text{ft}}{\text{sec}^2} \times 6 \text{ ft}} = 4.98$$

$$C_\Delta = 2800 \text{ lb}/62.4 \frac{\text{lb}}{\text{ft}^3} \times (6 \text{ ft})^3 = 0.208$$

The equilibrium conditions for the given deadrise and center of gravity location are listed in Table E-13 where for $C_V = 5$, the values of C_Δ, θ, z_T' and EHP' which straddle the desired value of C_Δ are

C_Δ	θ	z_T'	EHP'
0.196	2	0.076	0.826
0.326	3	0.099	0.926

By linear interpolation the desired values of trim, draft and power in dimensionless form are found to be

$$\theta = 2.00 + \frac{(0.208-0.196)}{0.326-0.196}(3.00-2.00) = 2.0$$

$$z_T' = 0.076 + \frac{(0.208-0.196)}{0.326-0.196}(0.099-0.076) = 0.078$$

$$EHP' = 0.826 + \frac{(0.208-0.196)}{0.326-0.196}(0.926-0.826) = 0.835$$

and the corresponding dimensional values of draft and power are

$$z_T = 0.078 \times 6 \text{ ft} = 0.47 \text{ ft}$$

$$EHP = 0.835 \times \frac{62.4}{2}\frac{\text{lb}}{\text{ft}^3} \times (6 \text{ ft})^3 \times \sqrt{32.2 \frac{\text{ft}}{\text{sec}^2} \times 6 \text{ ft}} \times \frac{1}{550}\frac{\text{HP}}{\text{ft lb/sec}} = 142$$

Allowing for a propeller efficiency of 70 percent and a gear and transmission efficiency of 85 percent yields an engine horsepower of about 240 for this design. Since the drag used to calculate the dimensionless EHP in these tables is for the model Reynolds number, this horsepower is somewhat higher than would actually be required. However the above example illustrates the usefulness of these empirical results.

The directional stability of each straight course equilibrium condition was calculated from the linearized equations of motion in sideslip and yaw. In dimensionless form, these equations are

$$\begin{aligned} 2C_\Delta \dot{\tilde{v}}' + 2C_\Delta x_G' \dot{\tilde{r}}' &= (Y_{Hr}' + Y_{Rv}')\tilde{v}' + (Y_{Hr}' + Y_{Rr}' - 2C_\Delta C_V \cos\theta)\tilde{v}' \\ 2C_\Delta x_G' \dot{\tilde{v}}' + 2C_\Delta R_z'^2 \dot{\tilde{r}}' &= (N_{Hv}' + N_{Rv}')\tilde{v}' + (N_{Hr}' + N_{Rr}' - 2x_G' C_\Delta C_V \cos\theta)\tilde{r}' \end{aligned} \qquad \text{(E-3)}$$

where "~" denotes a small perturbation, "·" denotes time differentiation, subscript "v" denotes the hydrodynamic force or moment derivative with respect to v'; similarly, "r" denotes the derivative with respect to r', subscript "H" are hull forces and moments while subscript "R" denotes rudder forces and moments. These force and moment derivatives are evaluated at the equilibrium condition so that $\omega' = \varphi = \beta = 0$ while C_V, θ and z_T' are the values given in each line of the tables. Using the results in Appendices B and D, it is seen that

$$
\begin{aligned}
Y'_{Hv} &= \frac{\partial}{\partial v'} Y'_S \\
Y'_{Rv} &= -2\pi A_R S'_R C_V \cos\theta/(A_R+2) \\
Y'_{Hr} &= \frac{\partial}{\partial \omega'} Y'_S \\
Y'_{Rr} &= x'_R\, Y'_{Rv} \\
N'_{Hv} &= \frac{\partial}{\partial v'} K'_S \sin\theta + \frac{\partial}{\partial v'} N'_S \cos\theta + x'_{RS} Y'_{Hv} \\
N'_{Rv} &= x'_R Y'_{Rv} \\
N'_{Hr} &= \frac{\partial}{\partial \omega'} K'_S \sin\theta + \frac{\partial}{\partial \omega'} N'_S \cos\theta + x'_{RS} Y'_{Hr} \\
N'_{Rr} &= x'^2_R Y'_{Rv}
\end{aligned}
\qquad \text{(E-4)}
$$

The directional stability roots are then obtained by finding the roots of the second order characteristic equation for the equations of motion (E-3). A root with positive real part indicates an unstable response while a negative real part means the equilibrium condition is directionally stable. Also, a complex root indicates an oscillatory uncontrolled response while a real root means the response will give an exponential response.

The trends observed in the results listed in Tables E-1 through E-24 agree with previous experience with planing craft. The equilibrium conditions and directional stability are not sensitive to VCG. As the LCG moves forward, at constant deadrise, speed and trim, the load coefficient increases, the draft increases, the required power increases, and the craft becomes more directionally stable (that is, the real part of the stability roots moves toward more negative values). Increasing deadrise for the same CG position and load yields an increase in draft and power, while the trim may increase or decrease.

Turning equilibrium conditions were evaluated using six force and moment equations together with engine-propeller torque equilibrium and zero vertical velocity. In dimensionless form,

$$X'_H + X'_R + X'_P + X'_G - 2C_\Delta[q'w' - r'v' - x'_G(q'^2 + r'^2) + y'_G p'q' + z'_G p'r'] = 0 \qquad \text{(E-5)}$$

[Cont'd]

$$
\begin{aligned}
&Y'_H+Y'_R+Y'_P+Y'_G-2C_\Delta[r'u'-p'w'-y'_G(r'^2+p'^2)+z'_Gq'r'+x'_Gq'p'] = 0\\
&Z'_H+Z'_R+Z'_P+Z'_G-2C_\Delta[p'v'-q'u'-z'_G(p'^2+q'^2)+x'_Gr'p'+y'_Gr'q'] = 0\\
&K'_H+K'_R+K'_P+K'_G-2C_\Delta[(R'^2_z-R'^2_y)q'r'+y'_G(p'v'-q'u')-z'_G(r'u'-p'w')] = 0\\
&M'_H+M'_R+M'_P+M'_G-2C_\Delta[(R'^2_x-R'^2_z)r'p'+z'_G(q'w'-r'v')-x'_G(p'v'-q'u')] = 0\\
&N'_H+N'_R+N'_P+N'_G-2C_\Delta[(R'^2_y-R'^2_x)p'q'+x'_G(r'u'-p'w')-y'_G(q'w'-r'v')] = 0\\
&Q'_P + \eta_E\gamma_E Q'_E = 0\\
&-u'\sin\theta + v'\sin\varphi\cos\theta + w'\cos\varphi\cos\theta = 0
\end{aligned}
\tag{E-5}
$$

where η_E is the ratio of power input to the propeller to the power output of the engine, which accounts for gearing and transmission losses, and where subscript "G" denotes force and moment components due to gravitational force in hull coordinates, which are given by

$$
\begin{aligned}
X'_G &= -2C_\Delta\sin\theta\\
Y'_G &= 2C_\Delta\cos\theta\sin\varphi\\
Z'_G &= 2C_\Delta\cos\theta\cos\varphi\\
K'_G &= y'_GZ'_G - z'_GY'_G\\
M'_G &= z'_GX'_G - x'_GZ'_G\\
N'_G &= x'_GY'_G - y'_GX'_G
\end{aligned}
\tag{E-6}
$$

The hull force and moment components denoted by subscript "H" were evaluated using the balance to hull transformation in Appendix B together with the coefficients and fitting functions listed in Appendices C and B, respectively. The rudder and propeller force and moment components denoted by subscripts "R" and "P" were evaluated by means of the analytical results shown in Appendix D as were the propeller and engine torque Q'_P and Q'_E. In satisfying the eight equations,(E-5), the following parameters were considered the unknowns:

$$C_V,\ \theta,\ z'_T,\ C_\Delta,\ \omega'_P,\ HP'_{ER},\ \omega',\ \alpha,\ \varphi,\ \psi_P,\ \beta \tag{E-7}$$

where α is the angle of attack of the projection of the resultant velocity

vector in the hull centerline plane with respect to the x-axis and β is the angle between this projection and the resultant velocity vector. The rectilinear and rotational velocity components in hull coordinates are then given by

$$
\begin{aligned}
u' &= C_V \cos\alpha \cos\beta & p' &= -\omega' \sin\theta \\
v' &= -C_V \sin\beta & q' &= \omega' \cos\theta \sin\varphi \\
w' &= C_V \sin\alpha \cos\beta & r' &= \omega' \cos\theta \cos\varphi
\end{aligned}
\qquad \text{(E-8)}
$$

for the case of a steady turn with turning rate ω'. The sideslip angle β was eliminated as an unknown by solving the last of Eqs.(E-5) which gives

$$
\beta = \arctan\left(\frac{\sin\alpha\cos\varphi\cos\theta - \cos\alpha\sin\theta}{\sin\varphi\cos\theta}\right) \qquad \text{(E-9)}
$$

The remaining seven of Eqs.(E-5) were used to find equilibrium values for seven of the unknowns (E-7) for given values of three of these unknowns.

The craft chosen for this illustration was used in a full-scale turning test program reported in Reference 9. Craft parameters used here are listed in Table E-26. Straight course equilibrium conditions are shown in lines 1 through 14 of Table E-26 as well as lines 24 and 29, as computed from Eqs. (E-5) for given values of C_V, C_Δ and ω'. The straight course equilibrium conditions in Table E-26 are in very good agreement with those estimated by interpolation from Tables E-1 through E-24. Consequently, the simplifications assumed in using only the pitch and heave equations are justified for estimating straight course equilibrium conditions.

In lines 1 through 6 of Table E-26, it is seen that as speed coefficient increases at constant load on straight course, the equilibrium trim angle is reduced, the draft decreases, the propeller rpm increases, the required power setting increases, the angle of attack is very nearly the same as the trim, the roll angle increases, and the very small engine angle required to maintain straight course increases. Comparing lines 2, 7 and 8 in Table E-26 shows that increasing load at constant speed on straight course requires greater trim angle at equilibrium, greater draft, higher propeller speed and power setting, yields larger roll angle but requires less engine turn angle to maintain straight course. In lines 9 through 14 together with lines 2, 3 and 4, the effect of deadrise at different speeds for the same

load on straight course is seen to have a scattered effect on equilibrium trim angle, while draft increases with deadrise. Propeller rpm and power setting also do not change monotonically with deadrise nor roll angle.

In lines 15 through 32, the engine turn angle is increased from the straight course value for four different cases, where C_Δ and HP'_{ER} were held constant in each case. As engine turn angle increases, speed decreases and trim decreases. For straight course speed coefficients 3.836 and 4, the draft increases with engine turn angle while for a straight course speed coefficient of 2.850 the draft decreases as engine turn angle increases. The propeller rpm decreases, the turning rate increases, the angle of attack decreases, and the roll angle increases except for lines 19 through 23 where the roll angle increases to 4.5 degrees, then drops off and increases again as engine turn angle increases. With the exception of this last trend, all parameters change in the expected manner.

In attempting to find solutions of Eqs.(E-5) for engine turn angles larger than those shown in Table E-26, unexplained difficulties arose giving unrealistic solutions. The source of these difficulties could possibly be the same inconsistencies in the planing data described previously. However, the results obtained are considered encouraging in that the trends of trim, roll, speed, rpm and draft are correctly predicted and the results appear reasonable. Again, for more accurate and reliable results, further work on the data reduction is recommended, followed by an investigation of any difficulties in solving Eqs.(E-5).

TABLE E-1

STRAIGHT COURSE EQUILIBRIUM AND STABILITY

BETA=10. DEG XG= .8 ZG=-0.50

CV	T	CDEL	DRAFT	EHP	DIRECTIONAL STABILITY ROOTS REAL	IMAG	REAL	IMAG
2.	2.	.084	.058	0.091	.775E+00	.000E+00	-.298E+00	.000E+00
2.	3.	.086	.078	0.074	-.490E-01	.000E+00	-.373E+00	.000E+00
2.	4.	.116	.096	0.088	.994E+00	.000E+00	-.230E+00	.000E+00
2.	5.	.159	.107	0.116	.433E+01	.000E+00	-.237E+00	.000E+00
2.	6.	.204	.113	0.139	.988E+01	.000E+00	-.244E+00	.000E+00
3.	2.	.088	.056	0.171	.112E+01	.000E+00	-.342E+00	.000E+00
3.	3.	.118	.070	0.162	.911E-01	.000E+00	-.258E+00	.000E+00
3.	4.	.183	.086	0.203	.131E+01	.000E+00	-.302E+00	.000E+00
3.	5.	.273	.103	0.270	.472E+01	.000E+00	-.368E+00	.000E+00
3.	6.	.375	.117	0.339	.103E+02	.000E+00	-.422E+00	.000E+00
4.	2.	.102	.049	0.290	.150E+01	.000E+00	-.380E+00	.000E+00
4.	3.	.164	.063	0.309	.335E+00	.000E+00	-.164E+00	.000E+00
4.	4.	.273	.080	0.410	.163E+01	.000E+00	-.281E+00	.000E+00
4.	5.	.422	.101	0.563	.511E+01	.000E+00	-.434E+00	.000E+00
4.	6.	.594	.123	0.729	.108E+02	.000E+00	-.559E+00	.000E+00
5.	2.	.098	.045	0.463	.198E+01	.000E+00	-.435E+00	.000E+00
5.	3.	.202	.059	0.552	.723E+00	.000E+00	-.137E+00	.000E+00
5.	4.	.373	.080	0.783	.193E+01	.000E+00	-.183E+00	.000E+00
5.	5.	.602	.107	1.110	.547E+01	.000E+00	-.429E+00	.000E+00
5.	6.	.858	.137	1.473	.112E+02	.000E+00	-.664E+00	.000E+00
6.	2.	.062	.044	0.761	.258E+01	.000E+00	-.557E+00	.000E+00
6.	3.	.230	.062	1.014	.125E+01	.000E+00	-.195E+00	.000E+00
6.	4.	.491	.089	1.509	.220E+01	.000E+00	-.232E-01	.000E+00
6.	5.	.815	.125	2.177	.577E+01	.000E+00	-.376E+00	.000E+00
6.	6.	1.129	.172	2.913	.116E+02	.000E+00	-.843E+00	.000E+00

TABLE E-2

STRAIGHT COURSE EQUILIBRIUM AND STABILITY

BETA=10. DEG XG= .8 ZG=-0.75

					DIRECTIØNAL STABILITY RØØTS			
CV	T	CDEL	DRAFT	EHP	REAL	IMAG	REAL	IMAG
2.	2.	.084	.057	0.091	.770E+00	.000E+00	-.304E+00	.000E+00
2.	3.	.085	.077	0.074	-.469E-01	.000E+00	-.384E+00	.000E+00
2.	4.	.113	.094	0.087	.985E+00	.000E+00	-.231E+00	.000E+00
2.	5.	.154	.104	0.114	.431E+01	.000E+00	-.235E+00	.000E+00
2.	6.	.196	.108	0.135	.986E+01	.000E+00	-.238E+00	.000E+00
3.	2.	.088	.055	0.170	.112E+01	.000E+00	-.342E+00	.000E+00
3.	3.	.117	.069	0.160	.919E-01	.000E+00	-.263E+00	.000E+00
3.	4.	.178	.084	0.199	.131E+01	.000E+00	-.303E+00	.000E+00
3.	5.	.264	.100	0.263	.471E+01	.000E+00	-.364E+00	.000E+00
3.	6.	.361	.112	0.327	.103E+02	.000E+00	-.411E+00	.000E+00
4.	2.	.102	.049	0.288	.150E+01	.000E+00	-.381E+00	.000E+00
4.	3.	.161	.062	0.304	.340E+00	.000E+00	-.171E+00	.000E+00
4.	4.	.265	.078	0.400	.162E+01	.000E+00	-.283E+00	.000E+00
4.	5.	.407	.097	0.543	.510E+01	.000E+00	-.427E+00	.000E+00
4.	6.	.570	.117	0.697	.108E+02	.000E+00	-.541E+00	.000E+00
5.	2.	.097	.044	0.461	.198E+01	.000E+00	-.436E+00	.000E+00
5.	3.	.197	.058	0.543	.733E+00	.000E+00	-.148E+00	.000E+00
5.	4.	.361	.078	0.759	.194E+01	.000E+00	-.192E+00	.000E+00
5.	5.	.579	.102	1.065	.547E+01	.000E+00	-.422E+00	.000E+00
5.	6.	.827	.130	1.403	.112E+02	.000E+00	-.635E+00	.000E+00
6.	2.	.061	.044	0.758	.258E+01	.000E+00	-.557E+00	.000E+00
6.	3.	.224	.061	0.998	.127E+01	.000E+00	-.208E+00	.000E+00
6.	4.	.475	.086	1.463	.222E+01	.000E+00	-.420E-01	.000E+00
6.	5.	.789	.120	2.092	.577E+01	.000E+00	-.364E+00	.000E+00
6.	6.	1.110	.162	2.794	.116E+02	.000E+00	-.776E+00	.000E+00

TABLE E-3

STRAIGHT COURSE EQUILIBRIUM AND STABILITY

BETA=10. DEG XG= .8 ZG=-1.00

					DIRECTIONAL STABILITY ROOTS			
CV	T	CDEL	DRAFT	EHP	REAL	IMAG	REAL	IMAG
2.	2.	.084	.055	0.091	.763E+00	.000E+00	-.311E+00	.000E+00
2.	3.	.083	.075	0.074	-.445E-01	.000E+00	-.397E+00	.000E+00
2.	4.	.110	.092	0.086	.976E+00	.000E+00	-.233E+00	.000E+00
2.	5.	.148	.101	0.111	.430E+01	.000E+00	-.233E+00	.000E+00
2.	6.	.188	.103	0.130	.985E+01	.000E+00	-.232E+00	.000E+00
3.	2.	.087	.055	0.170	.112E+01	.000E+00	-.343E+00	.000E+00
3.	3.	.115	.068	0.159	.929E-01	.000E+00	-.268E+00	.000E+00
3.	4.	.174	.083	0.196	.130E+01	.000E+00	-.303E+00	.000E+00
3.	5.	.255	.097	0.256	.470E+01	.000E+00	-.360E+00	.000E+00
3.	6.	.346	.108	0.315	.103E+02	.000E+00	-.401E+00	.000E+00
4.	2.	.101	.049	0.287	.150E+01	.000E+00	-.381E+00	.000E+00
4.	3.	.158	.061	0.300	.345E+00	.000E+00	-.179E+00	.000E+00
4.	4.	.257	.076	0.390	.162E+01	.000E+00	-.286E+00	.000E+00
4.	5.	.391	.094	0.523	.510E+01	.000E+00	-.422E+00	.000E+00
4.	6.	.546	.111	0.664	.108E+02	.000E+00	-.525E+00	.000E+00
5.	2.	.096	.044	0.458	.198E+01	.000E+00	-.437E+00	.000E+00
5.	3.	.193	.058	0.534	.743E+00	.000E+00	-.159E+00	.000E+00
5.	4.	.349	.076	0.735	.195E+01	.000E+00	-.201E+00	.000E+00
5.	5.	.556	.098	1.019	.547E+01	.000E+00	-.418E+00	.000E+00
5.	6.	.792	.122	1.330	.112E+02	.000E+00	-.609E+00	.000E+00
6.	2.	.060	.043	0.756	.259E+01	.000E+00	-.558E+00	.000E+00
6.	3.	.219	.060	0.982	.128E+01	.000E+00	-.221E+00	.000E+00
6.	4.	.458	.084	1.419	.224E+01	.000E+00	-.615E-01	.000E+00
6.	5.	.761	.114	2.006	.578E+01	.000E+00	-.356E+00	.000E+00
6.	6.	1.083	.152	2.666	.115E+02	.000E+00	-.717E+00	.000E+00

TABLE E-4

STRAIGHT COURSE EQUILIBRIUM AND STABILITY

BETA=10. DEG XG=1.2 ZG=-0.50

CV	T	CDEL	DRAFT	EHP	DIRECTIONAL STABILITY ROOTS REAL	IMAG	REAL	IMAG
2.	2.	.107	.086	0.102	.213E+00	.000E+00	-.606E+00	.000E+00
2.	3.	.132	.109	0.093	-.150E+00	.000E+00	-.584E+00	.000E+00
2.	4.	.193	.136	0.121	.317E+00	.000E+00	-.46[illegible]E+00	.000E+00
2.	5.	.266	.159	0.168	.197E+01	.000E+00	-.569E+00	.000E+00
2.	6.	.331	.175	0.214	.470E+01	.000E+00	-.697E+00	.000E+00
3.	2.	.124	.073	0.209	.311E+00	.000E+00	-.738E+00	.000E+00
3.	3.	.187	.097	0.224	-.433E+00	.190E+00	-.433E+00	-.190E+00
3.	4.	.298	.128	0.302	.390E-01	.000E+00	-.439E+00	.000E+00
3.	5.	.428	.160	0.410	.183E+01	.000E+00	-.841E+00	.000E+00
3.	6.	.550	.189	0.517	.454E+01	.000E+00	-.118E+01	.000E+00
4.	2.	.162	.066	0.389	.326E+00	.000E+00	-.683E+00	.000E+00
4.	3.	.285	.094	0.488	-.466E+00	.690E+00	-.466E+00	-.690E+00
4.	4.	.461	.131	0.683	-.336E+00	.864E+00	-.336E+00	-.864E+00
4.	5.	.643	.171	0.907	.113E+01	.000E+00	-.692E+00	.000E+00
4.	6.	.784	.210	1.103	.401E+01	.000E+00	-.154E+01	.000E+00
5.	2.	.183	.061	0.657	.350E+00	.000E+00	-.598E+00	.000E+00
5.	3.	.391	.096	0.963	-.511E+00	.120E+01	-.511E+00	-.120E+01
5.	4.	.641	.140	1.390	-.531E+00	.166E+01	-.531E+00	-.166E+01
5.	5.	.848	.188	1.802	-.171E+00	.134E+01	-.171E+00	-.134E+01
5.	6.	.932	.238	2.092	.310E+01	.000E+00	-.192E+01	.000E+00
6.	2.	.144	.056	1.007	.752E+00	.000E+00	-.861E+00	.000E+00
6.	3.	.478	.102	1.772	-.598E+00	.170E+01	-.598E+00	-.170E+01
6.	4.	.789	.155	2.595	-.829E+00	.247E+01	-.829E+00	-.247E+01
6.	5.	.956	.212	3.262	-.729E+00	.227E+01	-.729E+00	-.227E+01
6.	6.	.836	.273	3.578	.276E+01	.000E+00	-.338E+01	.000E+00

TABLE E-5

STRAIGHT COURSE EQUILIBRIUM AND STABILITY

BETA=10. DEG XG=1.2 ZG=-0.75

CV	T	CDEL	DRAFT	EHP	DIRECTIONAL STABILITY ROOTS REAL	IMAG	REAL	IMAG
2.	2.	.106	.086	0.101	.213E+00	.000E+00	-.611E+00	.000E+00
2.	3.	.130	.108	0.092	-.146E+00	.000E+00	-.594E+00	.000E+00
2.	4.	.189	.134	0.119	.315E+00	.000E+00	-.464E+00	.000E+00
2.	5.	.259	.156	0.164	.197E+01	.000E+00	-.563E+00	.000E+00
2.	6.	.322	.171	0.208	.470E+01	.000E+00	-.680E+00	.000E+00
3.	2.	.123	.073	0.208	.312E+00	.000E+00	-.741E+00	.000E+00
3.	3.	.184	.096	0.221	-.434E+00	.176E+00	-.434E+00	-.176E+00
3.	4.	.292	.126	0.297	.525E-01	.000E+00	-.449E+00	.000E+00
3.	5.	.420	.157	0.402	.183E+01	.000E+00	-.830E+00	.000E+00
3.	6.	.541	.185	0.507	.455E+01	.000E+00	-.115E+01	.000E+00
4.	2.	.161	.066	0.386	.331E+00	.000E+00	-.688E+00	.000E+00
4.	3.	.280	.093	0.481	-.464E+00	.679E+00	-.464E+00	-.679E+00
4.	4.	.454	.129	0.671	-.328E+00	.849E+00	-.328E+00	-.849E+00
4.	5.	.635	.167	0.891	.115E+01	.000E+00	-.676E+00	.000E+00
4.	6.	.782	.205	1.088	.402E+01	.000E+00	-.149E+01	.000E+00
5.	2.	.181	.060	0.651	.364E+00	.000E+00	-.610E+00	.000E+00
5.	3.	.384	.095	0.946	-.505E+00	.118E+01	-.505E+00	-.118E+01
5.	4.	.632	.137	1.364	-.515E+00	.164E+01	-.515E+00	-.164E+01
5.	5.	.843	.184	1.775	-.139E+00	.135E+01	-.139E+00	-.135E+01
5.	6.	.945	.233	2.077	.308E+01	.000E+00	-.179E+01	.000E+00
6.	2.	.141	.055	0.997	.768E+00	.000E+00	-.873E+00	.000E+00
6.	3.	.469	.100	1.741	-.588E+00	.168E+01	-.588E+00	-.168E+01
6.	4.	.782	.152	2.554	-.805E+00	.245E+01	-.805E+00	-.245E+01
6.	5.	.961	.208	3.229	-.688E+00	.231E+01	-.688E+00	-.231E+01
6.	6.	.865	.269	3.576	.265E+01	.000E+00	-.316E+01	.000E+00

TABLE E-6

STRAIGHT COURSE EQUILIBRIUM AND STABILITY

BETA=10. DEG XG=1.2 ZG=-1.00

					DIRECTIONAL STABILITY ROOTS			
CV	T	CDEL	DRAFT	EHP	REAL	IMAG	REAL	IMAG
2.	2.	.105	.085	0.101	.213E+00	.000E+00	-.616E+00	.000E+00
2.	3.	.128	.107	0.091	-.143E+00	.000E+00	-.604E+00	.000E+00
2.	4.	.184	.132	0.117	.313E+00	.000E+00	-.468E+00	.000E+00
2.	5.	.252	.153	0.161	.196E+01	.000E+00	-.557E+00	.000E+00
2.	6.	.313	.167	0.203	.470E+01	.000E+00	-.664E+00	.000E+00
3.	2.	.122	.072	0.207	.312E+00	.000E+00	-.744E+00	.000E+00
3.	3.	.181	.095	0.219	-.435E+00	.161E+00	-.435E+00	-.161E+00
3.	4.	.287	.124	0.291	.655E-01	.000E+00	-.459E+00	.000E+00
3.	5.	.412	.153	0.394	.184E+01	.000E+00	-.819E+00	.000E+00
3.	6.	.532	.180	0.497	.456E+01	.000E+00	-.112E+01	.000E+00
4.	2.	.159	.065	0.383	.335E+00	.000E+00	-.693E+00	.000E+00
4.	3.	.275	.092	0.473	-.463E+00	.668E+00	-.463E+00	-.668E+00
4.	4.	.446	.126	0.658	-.321E+00	.834E+00	-.321E+00	-.834E+00
4.	5.	.626	.163	0.874	.118E+01	.000E+00	-.662E+00	.000E+00
4.	6.	.778	.200	1.071	.404E+01	.000E+00	-.143E+01	.000E+00
5.	2.	.178	.060	0.645	.377E+00	.000E+00	-.622E+00	.000E+00
5.	3.	.377	.093	0.929	-.500E+00	.116E+01	-.500E+00	-.116E+01
5.	4.	.622	.135	1.338	-.500E+00	.162E+01	-.500E+00	-.162E+01
5.	5.	.838	.180	1.746	-.107E+00	.135E+01	-.107E+00	-.135E+01
5.	6.	.956	.228	2.060	.306E+01	.000E+00	-.167E+01	.000E+00
6.	2.	.138	.055	0.987	.783E+00	.000E+00	-.884E+00	.000E+00
6.	3.	.460	.098	1.711	-.578E+00	.165E+01	-.578E+00	-.165E+01
6.	4.	.774	.149	2.511	-.780E+00	.244E+01	-.780E+00	-.244E+01
6.	5.	.966	.204	3.193	-.646E+00	.235E+01	-.646E+00	-.235E+01
6.	6.	.894	.265	3.571	.253E+01	.000E+00	-.293E+01	.000E+00

TABLE E-7

STRAIGHT COURSE EQUILIBRIUM AND STABILITY

BETA=10. DEG XG=1.6 ZG=-0.50

					DIRECTIONAL STABILITY ROOTS			
CV	T	CDEL	DRAFT	EHP	REAL	IMAG	REAL	IMAG
2.	2.	.170	.115	0.132	-.300E-01	.000E+00	-.139E+01	.000E+00
2.	3.	.255	.153	0.147	-.330E+00	.000E+00	-.105E+01	.000E+00
2.	4.	.395	.201	0.207	-.241E+00	.000E+00	-.165E+01	.000E+00
2.	5.	.496	.243	0.266	.213E+00	.000E+00	-.306E+01	.000E+00
2.	6.	.504	.266	0.303	.921E+00	.000E+00	-.457E+01	.000E+00
3.	2.	.188	.097	0.275	-.680E-01	.000E+00	-.182E+01	.000E+00
3.	3.	.301	.135	0.330	-.667E+00	.000E+00	-.145E+01	.000E+00
3.	4.	.449	.180	0.439	-.605E+00	.000E+00	-.229E+01	.000E+00
3.	5.	.562	.224	0.542	-.342E-01	.000E+00	-.410E+01	.000E+00
3.	6.	.604	.260	0.610	.775E+00	.000E+00	-.631E+01	.000E+00
4.	2.	.267	.094	0.568	-.380E+00	.000E+00	-.193E+01	.000E+00
4.	3.	.442	.138	0.746	-.150E+01	.782E+00	-.150E+01	-.782E+00
4.	4.	.614	.186	0.958	-.186E+01	.000E+00	-.249E+01	.000E+00
4.	5.	.710	.232	1.115	-.659E+00	.000E+00	-.550E+01	.000E+00
4.	6.	.703	.273	1.179	.426E+00	.000E+00	-.864E+01	.000E+00
5.	2.	.346	.094	1.060	-.141E+01	.233E-01	-.141E+01	-.233E-01
5.	3.	.588	.145	1.489	-.207E+01	.156E+01	-.207E+01	-.156E+01
5.	4.	.763	.196	1.862	-.307E+01	.116E+01	-.307E+01	-.116E+01
5.	5.	.806	.245	2.080	-.134E+01	.000E+00	-.730E+01	.000E+00
5.	6.	.697	.290	2.107	.206E+00	.000E+00	-.116E+02	.000E+00
6.	2.	.369	.092	1.758	-.168E+01	.633E+00	-.168E+01	-.633E+00
6.	3.	.685	.152	2.657	-.275E+01	.217E+01	-.275E+01	-.217E+01
6.	4.	.833	.208	3.268	-.414E+01	.137E+01	-.414E+01	-.137E+01
6.	5.	.783	.259	3.557	-.155E+01	.000E+00	-.994E+01	.000E+00
6.	6.	.524	.307	3.508	.524E+00	.000E+00	-.155E+02	.000E+00

TABLE E-8

STRAIGHT COURSE EQUILIBRIUM AND STABILITY

BETA=10. DEG XG=1.6 ZG=-0.75

					DIRECTIONAL STABILITY ROOTS			
CV	T	CDEL	DRAFT	EHP	REAL	IMAG	REAL	IMAG
2.	2.	.167	.114	0.131	-.274E-01	.000E+00	-.140E+01	.000E+00
2.	3.	.248	.151	0.144	-.317E+00	.000E+00	-.106E+01	.000E+00
2.	4.	.379	.196	0.200	-.221E+00	.000E+00	-.162E+01	.000E+00
2.	5.	.474	.236	0.258	.236E+00	.000E+00	-.294E+01	.000E+00
2.	6.	.491	.257	0.298	.933E+00	.000E+00	-.438E+01	.000E+00
3.	2.	.186	.096	0.273	-.645E-01	.000E+00	-.183E+01	.000E+00
3.	3.	.296	.134	0.325	-.649E+00	.000E+00	-.145E+01	.000E+00
3.	4.	.442	.178	0.432	-.590E+00	.000E+00	-.226E+01	.000E+00
3.	5.	.556	.220	0.537	-.242E-01	.000E+00	-.402E+01	.000E+00
3.	6.	.605	.255	0.608	.776E+00	.000E+00	-.617E+01	.000E+00
4.	2.	.264	.093	0.563	-.370E+00	.000E+00	-.194E+01	.000E+00
4.	3.	.437	.136	0.736	-.149E+01	.770E+00	-.149E+01	-.770E+00
4.	4.	.609	.184	0.947	-.189E+01	.000E+00	-.239E+01	.000E+00
4.	5.	.710	.229	1.108	-.664E+00	.000E+00	-.539E+01	.000E+00
4.	6.	.712	.270	1.181	.409E+00	.000E+00	-.849E+01	.000E+00
5.	2.	.342	.093	1.050	-.124E+01	.000E+00	-.156E+01	.000E+00
5.	3.	.583	.143	1.472	-.205E+01	.155E+01	-.205E+01	-.155E+01
5.	4.	.760	.194	1.846	-.303E+01	.121E+01	-.303E+01	-.121E+01
5.	5.	.812	.243	2.072	-.137E+01	.000E+00	-.715E+01	.000E+00
5.	6.	.712	.287	2.112	.167E+00	.000E+00	-.114E+02	.000E+00
6.	2.	.363	.091	1.738	-.167E+01	.589E+00	-.167E+01	-.589E+00
6.	3.	.681	.151	2.632	-.273E+01	.217E+01	-.273E+01	-.217E+01
6.	4.	.835	.206	3.248	-.409E+01	.146E+01	-.409E+01	-.146E+01
6.	5.	.793	.257	3.550	-.161E+01	.000E+00	-.978E+01	.000E+00
6.	6.	.539	.305	3.514	.481E+00	.000E+00	-.154E+02	.000E+00

TABLE E-9

STRAIGHT COURSE EQUILIBRIUM AND STABILITY

BETA=10. DEG XG=1.6 ZG=-1.00

CV	T	CDEL	DRAFT	EMP	DIRECTIONAL STABILITY ROOTS REAL	IMAG	REAL	IMAG
2.	2.	.165	.113	0.130	-.249E-01	.000E+00	-.140E+01	.000E+00
2.	3.	.241	.149	0.141	-.306E+00	.000E+00	-.106E+01	.000E+00
2.	4.	.363	.192	0.194	-.202E+00	.000E+00	-.159E+01	.000E+00
2.	5.	.455	.229	0.251	.257E+00	.000E+00	-.283E+01	.000E+00
2.	6.	.478	.250	0.293	.943E+00	.000E+00	-.421E+01	.000E+00
3.	2.	.184	.096	0.271	-.611E-01	.000E+00	-.183E+01	.000E+00
3.	3.	.291	.132	0.321	-.632E+00	.000E+00	-.146E+01	.000E+00
3.	4.	.435	.175	0.426	-.574E+00	.000E+00	-.224E+01	.000E+00
3.	5.	.550	.216	0.530	-.139E-01	.000E+00	-.394E+01	.000E+00
3.	6.	.606	.251	0.605	.777E+00	.000E+00	-.604E+01	.000E+00
4.	2.	.262	.093	0.558	-.360E+00	.000E+00	-.194E+01	.000E+00
4.	3.	.432	.135	0.727	-.148E+01	.758E+00	-.148E+01	-.758E+00
4.	4.	.603	.181	0.930	-.193E+01	.000E+00	-.229E+01	.000E+00
4.	5.	.710	.226	1.101	-.669E+00	.000E+00	-.529E+01	.000E+00
4.	6.	.721	.267	1.182	.322E+00	.000E+00	-.833E+01	.000E+00
5.	2.	.338	.092	1.039	-.116E+01	.000E+00	-.162E+01	.000E+00
5.	3.	.577	.142	1.455	-.203E+01	.154E+01	-.203E+01	-.154E+01
5.	4.	.758	.192	1.830	-.299E+01	.125E+01	-.299E+01	-.125E+01
5.	5.	.817	.240	2.065	-.141E+01	.000E+00	-.701E+01	.000E+00
5.	6.	.727	.285	2.116	.128E+00	.000E+00	-.113E+02	.000E+00
6.	2.	.358	.090	1.718	-.165E+01	.541E+00	-.165E+01	-.541E+00
6.	3.	.676	.149	2.607	-.270E+01	.216E+01	-.270E+01	-.216E+01
6.	4.	.836	.204	3.228	-.405E+01	.155E+01	-.405E+01	-.155E+01
6.	5.	.804	.256	3.543	-.166E+01	.000E+00	-.962E+01	.000E+00
6.	6.	.554	.304	3.520	.436E+00	.000E+00	-.152E+02	.000E+00

TABLE E-10

STRAIGHT COURSE EQUILIBRIUM AND STABILITY

BETA=15. DEG XG= .8 ZG=-0.50

CV	T	CDEL	DRAFT	EHP	DIRECTIONAL STABILITY ROOTS REAL	IMAG	REAL	IMAG
2.	2.	.053	.054	0.102	.326E+00	.000E+00	-.400E+00	.000E+00
2.	3.	.097	.107	0.115	-.202E+00	.000E+00	-.586E+00	.000E+00
2.	4.	.127	.130	0.118	.262E+00	.000E+00	-.377E+00	.000E+00
2.	5.	.159	.143	0.129	.242E+01	.000E+00	-.395E+00	.000E+00
2.	6.	.192	.155	0.145	.620E+01	.000E+00	-.456E+00	.000E+00
3.	2.	.053	.063	0.192	.279E+00	.000E+00	-.571E+00	.000E+00
3.	3.	.123	.092	0.211	-.207E+00	.000E+00	-.647E+00	.000E+00
3.	4.	.191	.110	0.230	.397E+00	.000E+00	-.433E+00	.000E+00
3.	5.	.267	.126	0.265	.274E+01	.000E+00	-.466E+00	.000E+00
3.	6.	.350	.144	0.317	.674E+01	.000E+00	-.536E+00	.000E+00
4.	2.	.055	.055	0.313	.348E+00	.000E+00	-.742E+00	.000E+00
4.	3.	.135	.073	0.333	-.232E+00	.000E+00	-.599E+00	.000E+00
4.	4.	.221	.086	0.369	.498E+00	.000E+00	-.371E+00	.000E+00
4.	5.	.322	.101	0.439	.306E+01	.000E+00	-.463E+00	.000E+00
4.	6.	.442	.122	0.552	.727E+01	.000E+00	-.558E+00	.000E+00
5.	2.	.077	.052	0.564	.461E+00	.000E+00	-.819E+00	.000E+00
5.	3.	.136	.060	0.526	-.197E+00	.000E+00	-.484E+00	.000E+00
5.	4.	.204	.066	0.531	.754E+00	.000E+00	-.350E+00	.000E+00
5.	5.	.302	.076	0.622	.348E+01	.000E+00	-.447E+00	.000E+00
5.	6.	.451	.099	0.833	.787E+01	.000E+00	-.549E+00	.000E+00
6.	2.	.115	.057	1.116	.655E+00	.000E+00	-.798E+00	.000E+00
6.	3.	.147	.058	0.965	.586E-01	.000E+00	-.412E+00	.000E+00
6.	4.	.180	.058	0.870	.128E+01	.000E+00	-.429E+00	.000E+00
6.	5.	.235	.061	0.897	.411E+01	.000E+00	-.501E+00	.000E+00
6.	6.	.381	.081	1.197	.865E+01	.000E+00	-.568E+00	.000E+00

TABLE E-11

STRAIGHT COURSE EQUILIBRIUM AND STABILITY

BETA=15. DEG XG= .8 ZG=-0.75

CV	T	CDEL	DRAFT	EHP	DIRECTIONAL STABILITY ROOTS REAL	IMAG	REAL	IMAG
2.	2.	.048	.051	0.099	.336E+00	.000E+00	-.407E+00	.000E+00
2.	3.	.095	.106	0.115	-.197E+00	.000E+00	-.594E+00	.000E+00
2.	4.	.124	.128	0.117	.261E+00	.000E+00	-.381E+00	.000E+00
2.	5.	.154	.140	0.127	.241E+01	.000E+00	-.395E+00	.000E+00
2.	6.	.183	.150	0.141	.618E+01	.000E+00	-.455E+00	.000E+00
3.	2.	.052	.063	0.191	.280E+00	.000E+00	-.573E+00	.000E+00
3.	3.	.120	.091	0.208	-.202E+00	.000E+00	-.655E+00	.000E+00
3.	4.	.186	.108	0.226	.392E+00	.000E+00	-.435E+00	.000E+00
3.	5.	.258	.123	0.258	.272E+01	.000E+00	-.463E+00	.000E+00
3.	6.	.337	.140	0.306	.671E+01	.000E+00	-.531E+00	.000E+00
4.	2.	.054	.055	0.312	.349E+00	.000E+00	-.744E+00	.000E+00
4.	3.	.131	.072	0.328	-.218E+00	.000E+00	-.617E+00	.000E+00
4.	4.	.213	.084	0.358	.498E+00	.000E+00	-.380E+00	.000E+00
4.	5.	.307	.097	0.421	.304E+01	.000E+00	-.461E+00	.000E+00
4.	6.	.421	.117	0.526	.723E+01	.000E+00	-.551E+00	.000E+00
5.	2.	.076	.052	0.562	.463E+00	.000E+00	-.822E+00	.000E+00
5.	3.	.132	.059	0.518	-.162E+00	.000E+00	-.523E+00	.000E+00
5.	4.	.192	.063	0.510	.767E+00	.000E+00	-.372E+00	.000E+00
5.	5.	.279	.072	0.583	.346E+01	.000E+00	-.452E+00	.000E+00
5.	6.	.422	.093	0.782	.784E+01	.000E+00	-.544E+00	.000E+00
6.	2.	.114	.056	1.111	.658E+00	.000E+00	-.803E+00	.000E+00
6.	3.	.144	.058	0.954	.871E-01	.000E+00	-.444E+00	.000E+00
6.	4.	.171	.056	0.846	.130E+01	.000E+00	-.451E+00	.000E+00
6.	5.	.211	.058	0.843	.411E+01	.000E+00	-.514E+00	.000E+00
6.	6.	.349	.076	1.121	.862E+01	.000E+00	-.568E+00	.000E+00

TABLE E-12

STRAIGHT COURSE EQUILIBRIUM AND STABILITY

BETA=15. DEG XG= .8 ZG=-1.00

					DIRECTIONAL STABILITY ROOTS			
CV	T	CDEL	DRAFT	EHP	REAL	IMAG	REAL	IMAG
2.	3.	.093	.105	0.114	-.192E+00	.000E+00	-.602E+00	.000E+00
2.	4.	.121	.126	0.116	.260E+00	.000E+00	-.386E+00	.000E+00
2.	5.	.148	.138	0.124	.240E+01	.000E+00	-.396E+00	.000E+00
2.	6.	.174	.146	0.137	.616E+01	.000E+00	-.453E+00	.000E+00
3.	2.	.051	.063	0.190	.281E+00	.000E+00	-.574E+00	.000E+00
3.	3.	.118	.090	0.206	-.197E+00	.000E+00	-.663E+00	.000E+00
3.	4.	.181	.107	0.222	.388E+00	.000E+00	-.438E+00	.000E+00
3.	5.	.249	.120	0.251	.271E+01	.000E+00	-.461E+00	.000E+00
3.	6.	.323	.135	0.296	.668E+01	.000E+00	-.526E+00	.000E+00
4.	2.	.052	.055	0.310	.350E+00	.000E+00	-.746E+00	.000E+00
4.	3.	.128	.071	0.323	-.204E+00	.000E+00	-.634E+00	.000E+00
4.	4.	.205	.082	0.348	.499E+00	.000E+00	-.389E+00	.000E+00
4.	5.	.292	.094	0.403	.303E+01	.000E+00	-.460E+00	.000E+00
4.	6.	.401	.111	0.501	.720E+01	.000E+00	-.544E+00	.000E+00
5.	2.	.075	.052	0.559	.465E+00	.000E+00	-.826E+00	.000E+00
5.	3.	.127	.058	0.509	-.134E+00	.000E+00	-.555E+00	.000E+00
5.	4.	.181	.061	0.491	.781E+00	.000E+00	-.395E+00	.000E+00
5.	5.	.256	.068	0.543	.345E+01	.000E+00	-.458E+00	.000E+00
5.	6.	.392	.087	0.731	.781E+01	.000E+00	-.539E+00	.000E+00
6.	2.	.112	.056	1.107	.661E+00	.000E+00	-.808E+00	.000E+00
6.	3.	.140	.057	0.944	.112E+00	.000E+00	-.473E+00	.000E+00
6.	4.	.161	.055	0.823	.131E+01	.000E+00	-.472E+00	.000E+00
6.	5.	.188	.054	0.790	.410E+01	.000E+00	-.528E+00	.000E+00
6.	6.	.316	.071	1.047	.859E+01	.000E+00	-.569E+00	.000E+00

TABLE E-13

STRAIGHT COURSE EQUILIBRIUM AND STABILITY

BETA=15. DEG XG=1.2 ZG=-0.50

CV	T	CDEL	DRAFT	EHP	DIRECTIONAL STABILITY ROOTS REAL	IMAG	REAL	IMAG
2.	2.	.145	.108	0.155	-.744E-01	.000E+00	-.127E+01	.000E+00
2.	3.	.177	.147	0.149	-.260E+00	.000E+00	-.131E+01	.000E+00
2.	4.	.226	.178	0.155	-.128E+00	.000E+00	-.107E+01	.000E+00
2.	5.	.289	.209	0.175	.765E+00	.000E+00	-.923E+00	.000E+00
2.	6.	-.017	.048	0.042	.231E+01	.000E+00	-.881E+00	.000E+00
3.	2.	.138	.093	0.273	-.858E-01	.000E+00	-.163E+01	.000E+00
3.	3.	.229	.129	0.303	-.416E+00	.000E+00	-.144E+01	.000E+00
3.	4.	.327	.159	0.341	-.413E+00	.000E+00	-.997E+00	.000E+00
3.	5.	.432	.192	0.400	.684E+00	.000E+00	-.960E+00	.000E+00
3.	6.	.535	.219	0.479	.276E+01	.000E+00	-.110E+01	.000E+00
4.	2.	.158	.081	0.468	-.158E+00	.000E+00	-.184E+01	.000E+00
4.	3.	.287	.113	0.550	-.102E+01	.205E+00	-.102E+01	-.205E+00
4.	4.	.420	.140	0.644	-.755E+00	.716E+00	-.755E+00	-.716E+00
4.	5.	.557	.168	0.766	-.244E-01	.000E+00	-.257E+00	.000E+00
4.	6.	.687	.196	0.915	.271E+01	.000E+00	-.969E+00	.000E+00
5.	2.	.196	.076	0.826	-.333E+00	.000E+00	-.186E+01	.000E+00
5.	3.	.326	.099	0.926	-.107E+01	.77[illegible]E+00	-.107E+01	-.775E+00
5.	4.	.473	.122	1.079	-.751E+00	.12[illegible]E+01	-.751E+00	-.120E+01
5.	5.	.628	.147	1.282	-.860E-01	.103E+01	-.860E-01	-.103E+01
5.	6.	.777	.174	1.528	.258E+01	.000E+00	-.621E+00	.000E+00
6.	2.	.228	.076	1.473	-.621E+00	.000E+00	-.170E+01	.000E+00
6.	3.	.327	.089	1.502	-.107E+01	.106E+01	-.107E+01	-.106E+01
6.	4.	.460	.106	1.664	-.693E+00	.146E+01	-.693E+00	-.146E+01
6.	5.	.613	.127	1.939	.263E-01	.134E+01	.263E-01	-.134E+01
6.	6.	.768	.152	2.301	.261E+01	.000E+00	-.322E+00	.000E+00

TABLE E-14

STRAIGHT COURSE EQUILIBRIUM AND STABILITY

BETA=15. DEG XG=1.2 ZG=-0.75

CV	T	CDEL	DRAFT	EHP	DIRECTIONAL STABILITY ROOTS REAL	IMAG	REAL	IMAG
2.	2.	.143	.107	0.154	-.706E-01	.000E+00	-.128E+01	.000E+00
2.	3.	.173	.145	0.148	-.254E+00	.000E+00	-.132E+01	.000E+00
2.	4.	.220	.176	0.152	-.123E+00	.000E+00	-.109E+01	.000E+00
2.	5.	.280	.204	0.172	.754E+00	.000E+00	-.941E+00	.000E+00
3.	2.	.135	.092	0.271	-.813E-01	.000E+00	-.163E+01	.000E+00
3.	3.	.225	.127	0.299	-.406E+00	.000E+00	-.145E+01	.000E+00
3.	4.	.321	.157	0.336	-.394E+00	.000E+00	-.102E+01	.000E+00
3.	5.	.423	.185	0.392	.674E+00	.000E+00	-.972E+00	.000E+00
3.	6.	.524	.213	0.468	.272E+01	.000E+00	-.111E+01	.000E+00
4.	2.	.155	.080	0.463	-.149E+00	.000E+00	-.184E+01	.000E+00
4.	3.	.281	.111	0.541	-.103E+01	.135E+00	-.103E+01	-.135E+00
4.	4.	.411	.138	0.631	-.758E+00	.694E+00	-.758E+00	-.694E+00
4.	5.	.546	.164	0.748	.225E-01	.000E+00	-.321E+00	.000E+00
4.	6.	.675	.192	0.892	.268E+01	.000E+00	-.972E+00	.000E+00
5.	2.	.192	.075	0.817	-.317E+00	.000E+00	-.188E+01	.000E+00
5.	3.	.319	.097	0.910	-.107E+01	.745E+00	-.107E+01	-.745E+00
5.	4.	.462	.120	1.054	-.753E+00	.117E+01	-.753E+00	-.117E+01
5.	5.	.614	.144	1.249	-.924E-01	.100E+01	-.924E-01	-.100E+01
5.	6.	.762	.170	1.487	.256E+01	.000E+00	-.632E+00	.000E+00
6.	2.	.224	.075	1.461	-.592E+00	.000E+00	-.173E+01	.000E+00
6.	3.	.319	.088	1.478	-.107E+01	.103E+01	-.107E+01	-.103E+01
6.	4.	.448	.104	1.625	-.694E+00	.143E+01	-.694E+00	-.143E+01
6.	5.	.597	.124	1.885	.218E-01	.130E+01	.218E-01	-.130E+01
6.	6.	.749	.147	2.235	.263E+01	.000E+00	-.356E+00	.000E+00

TABLE E-15

STRAIGHT COURSE EQUILIBRIUM AND STABILITY

BETA=15. DEG XG=1.2 ZG=-1.00

CV	T	CDEL	DRAFT	EHP	DIRECTIONAL STABILITY ROOTS REAL	IMAG	REAL	IMAG
2.	2.	.140	.106	0.153	-.669E-01	.000E+00	-.128E+01	.000E+00
2.	3.	.170	.143	0.146	-.249E+00	.000E+00	-.133E+01	.000E+00
2.	4.	.215	.173	0.151	-.117E+00	.000E+00	-.111E+01	.000E+00
2.	5.	.271	.200	0.169	.744E+00	.000E+00	-.958E+00	.000E+00
3.	2.	.132	.091	0.268	-.769E-01	.000E+00	-.163E+01	.000E+00
3.	3.	.221	.126	0.295	-.397E+00	.000E+00	-.147E+01	.000E+00
3.	4.	.314	.154	0.330	-.377E+00	.000E+00	-.105E+01	.000E+00
3.	5.	.414	.181	0.384	.666E+00	.000E+00	-.983E+00	.000E+00
3.	6.	.513	.209	0.458	.269E+01	.000E+00	-.112E+01	.000E+00
4.	2.	.151	.079	0.458	-.141E+00	.000E+00	-.185E+01	.000E+00
4.	3.	.275	.109	0.532	-.951E+00	.000E+00	-.110E+01	.000E+00
4.	4.	.403	.135	0.619	-.761E+00	.672E+00	-.761E+00	-.672E+00
4.	5.	.534	.161	0.731	.623E-01	.000E+00	-.376E+00	.000E+00
4.	6.	.662	.187	0.870	.266E+01	.000E+00	-.975E+00	.000E+00
5.	2.	.188	.074	0.808	-.302E+00	.000E+00	-.189E+01	.000E+00
5.	3.	.311	.096	0.894	-.107E+01	.713E+00	-.107E+01	-.713E+00
5.	4.	.451	.117	1.029	-.755E+00	.114E+01	-.755E+00	-.114E+01
5.	5.	.600	.140	1.215	-.984E-01	.971E+00	-.984E-01	-.971E+00
5.	6.	.746	.165	1.445	.255E+01	.000E+00	-.645E+00	.000E+00
6.	2.	.221	.075	1.450	-.564E+00	.000E+00	-.175E+01	.000E+00
6.	3.	.312	.087	1.455	-.107E+01	.991E+00	-.107E+01	-.991E+00
6.	4.	.435	.102	1.586	-.695E+00	.139E+01	-.695E+00	-.139E+01
6.	5.	.580	.120	1.831	.178E-01	.124E+01	.178E-01	-.124E+01
6.	6.	.730	.143	2.167	.265E+01	.000E+00	-.393E+00	.000E+00

TABLE E-16

STRAIGHT CØURSE EQUILIBRIUM AND STABILITY

BETA=15. DEG XG=1.6 ZG=-0.50

CV	T	CDEL	DRAFT	EHP	DIRECTIØNAL STABILITY RØØTS REAL	IMAG	REAL	IMAG
2.	2.	.326	.178	0.238	-.298E+00	.000E+00	-.286E+01	.000E+00
2.	3.	.363	.217	0.220	-.441E+00	.000E+00	-.236E+01	.000E+00
2.	4.	.436	.262	0.227	-.387E+00	.000E+00	-.224E+01	.000E+00
2.	5.	.526	.314	0.256	-.802E-01	.000E+00	-.237E+01	.000E+00
2.	6.	.613	.379	0.311	.434E+00	.000E+00	-.242E+01	.000E+00
3.	2.	.301	.144	0.430	-.378E+00	.000E+00	-.345E+01	.000E+00
3.	3.	.388	.182	0.446	-.692E+00	.000E+00	-.285E+01	.000E+00
3.	4.	.488	.218	0.487	-.735E+00	.000E+00	-.274E+01	.000E+00
4.	2.	.348	.130	0.775	-.641E+00	.000E+00	-.379E+01	.000E+00
4.	3.	.471	.164	0.848	-.136E+01	.000E+00	-.278E+01	.000E+00
4.	4.	.599	.196	0.948	-.203E+01	.412E+00	-.203E+01	-.412E+00
4.	5.	.721	.228	1.076	-.131E+01	.000E+00	-.282E+01	.000E+00
5.	2.	.403	.120	1.335	-.107E+01	.000E+00	-.392E+01	.000E+00
5.	3.	.538	.148	1.459	-.232E+01	.938E+00	-.232E+01	-.938E+00
5.	4.	.681	.177	1.632	-.226E+01	.152E+01	-.226E+01	-.152E+01
5.	5.	.819	.205	1.846	-.228E+01	.145E+01	-.228E+01	-.145E+01
6.	2.	.420	.111	2.158	-.148E+01	.000E+00	-.399E+01	.000E+00
6.	3.	.547	.133	2.293	-.251E+01	.147E+01	-.251E+01	-.147E+01
6.	4.	.692	.157	2.531	-.243E+01	.207E+01	-.243E+01	-.207E+01
6.	5.	.835	.182	2.840	-.242E+01	.216E+01	-.242E+01	-.216E+01
6.	6.	.961	.208	3.197	-.244E+01	.166E+01	-.244E+01	-.166E+01

TABLE E-17

STRAIGHT CØURSE EQUILIBRIUM AND STABILITY

BETA=15. DEG XG=1.6 ZG=-0.75

CV	T	CDEL	DRAFT	EHP	DIRECTIØNAL STABILITY RØØTS REAL	IMAG	REAL	IMAG
2.	2.	.320	.176	0.236	-.291E+00	.000E+00	-.287E+01	.000E+00
2.	3.	.353	.214	0.216	-.430E+00	.000E+00	-.238E+01	.000E+00
2.	4.	.422	.257	0.222	-.373E+00	.000E+00	-.228E+01	.000E+00
2.	5.	.508	.306	0.249	-.716E-01	.000E+00	-.246E+01	.000E+00
2.	6.	.590	.366	0.301	.428E+00	.000E+00	-.260E+01	.000E+00
3.	2.	.296	.143	0.426	-.371E+00	.000E+00	-.345E+01	.000E+00
3.	3.	.382	.180	0.441	-.679E+00	.000E+00	-.286E+01	.000E+00
3.	4.	.481	.215	0.480	-.718E+00	.000E+00	-.276E+01	.000E+00
3.	5.	.580	.250	0.542	-.360E+00	.000E+00	-.318E+01	.000E+00
3.	6.	.664	.285	0.627	.254E+00	.000E+00	-.388E+01	.000E+00
4.	2.	.344	.128	0.767	-.629E+00	.000E+00	-.379E+01	.000E+00
4.	3.	.465	.162	0.837	-.132E+01	.000E+00	-.281E+01	.000E+00
4.	4.	.592	.194	0.934	-.203E+01	.337E+00	-.203E+01	-.337E+00
4.	5.	.714	.225	1.059	-.127E+01	.000E+00	-.286E+01	.000E+00
4.	6.	.819	.255	1.210	-.358E+00	.000E+00	-.388E+01	.000E+00
5.	2.	.398	.119	1.323	-.104E+01	.000E+00	-.393E+01	.000E+00
5.	3.	.531	.147	1.441	-.231E+01	.899E+00	-.231E+01	-.899E+00
5.	4.	.674	.175	1.609	-.226E+01	.149E+01	-.226E+01	-.149E+01
5.	5.	.811	.202	1.817	-.228E+01	.141E+01	-.228E+01	-.141E+01
5.	6.	.931	.230	2.057	-.180E+01	.000E+00	-.284E+01	.000E+00
6.	2.	.416	.110	2.141	-.145E+01	.000E+00	-.401E+01	.000E+00
6.	3.	.540	.132	2.266	-.250E+01	.143E+01	-.250E+01	-.143E+01
6.	4.	.683	.155	2.495	-.242E+01	.204E+01	-.242E+01	-.204E+01
6.	5.	.826	.179	2.795	-.241E+01	.212E+01	-.241E+01	-.212E+01
6.	6.	.952	.204	3.144	-.244E+01	.161E+01	-.244E+01	-.161E+01

TABLE E-18

STRAIGHT COURSE EQUILIBRIUM AND STABILITY

BETA=15. DEG XG=1.6 ZG=-1.00

					DIRECTIONAL STABILITY ROOTS			
CV	T	CDEL	DRAFT	EHP	REAL	IMAG	REAL	IMAG
2.	2.	.314	.174	0.233	-.284E+00	.000E+00	-.287E+01	.000E+00
2.	3.	.344	.211	0.213	-.419E+00	.000E+00	-.239E+01	.000E+00
2.	4.	.408	.252	0.217	-.360E+00	.000E+00	-.232E+01	.000E+00
2.	5.	.490	.298	0.243	-.622E-01	.000E+00	-.253E+01	.000E+00
2.	6.	.568	.354	0.291	.427E+00	.000E+00	-.276E+01	.000E+00
3.	2.	.292	.142	0.421	-.364E+00	.000E+00	-.345E+01	.000E+00
3.	3.	.376	.178	0.435	-.666E+00	.000E+00	-.287E+01	.000E+00
3.	4.	.474	.213	0.473	-.702E+00	.000E+00	-.278E+01	.000E+00
3.	5.	.571	.247	0.534	-.349E+00	.000E+00	-.321E+01	.000E+00
3.	6.	.656	.281	0.616	.256E+00	.000E+00	-.391E+01	.000E+00
4.	2.	.339	.127	0.760	-.617E+00	.000E+00	-.380E+01	.000E+00
4.	3.	.459	.160	0.827	-.129E+01	.000E+00	-.283E+01	.000E+00
4.	4.	.584	.191	0.921	-.203E+01	.240E+00	-.203E+01	-.240E+00
4.	5.	.706	.221	1.043	-.123E+01	.000E+00	-.290E+01	.000E+00
4.	6.	.812	.251	1.190	-.347E+00	.000E+00	-.391E+01	.000E+00
5.	2.	.393	.118	1.310	-.102E+01	.000E+00	-.394E+01	.000E+00
5.	3.	.525	.145	1.423	-.231E+01	.858E+00	-.231E+01	-.858E+00
5.	4.	.666	.172	1.585	-.225E+01	.145E+01	-.225E+01	-.145E+01
5.	5.	.803	.199	1.788	-.228E+01	.137E+01	-.228E+01	-.137E+01
5.	6.	.923	.226	2.023	-.172E+01	.000E+00	-.293E+01	.000E+00
6.	2.	.411	.110	2.124	-.142E+01	.000E+00	-.403E+01	.000E+00
6.	3.	.533	.130	2.239	-.250E+01	.139E+01	-.250E+01	-.139E+01
6.	4.	.675	.153	2.458	-.241E+01	.200E+01	-.241E+01	-.200E+01
6.	5.	.817	.177	2.749	-.241E+01	.208E+01	-.241E+01	-.208E+01
6.	6.	.943	.201	3.091	-.243E+01	.155E+01	-.243E+01	-.155E+01

TABLE E-19

STRAIGHT CØURSE EQUILIBRIUM AND STABILITY

BETA=20. DEG XG= .8 ZG=-0.50

CV	T	CDEL	DRAFT	EHP	DIRECTIØNAL STABILITY RØØTS REAL	IMAG	REAL	IMAG
2.	2.	.115	.104	0.079	-.285E+00	.000E+00	-.118E+01	.000E+00
2.	3.	.092	.111	0.064	-.247E+00	.000E+00	-.154E+01	.000E+00
2.	4.	.108	.127	0.073	-.254E+00	.000E+00	-.138E+01	.000E+00
2.	5.	.043	.085	0.073	-.850E-01	.000E+00	-.149E+01	.000E+00
2.	6.	.050	.094	0.090	.240E+00	.000E+00	-.722E+00	.000E+00
3.	2.	.061	.072	0.205	-.264E+00	.000E+00	-.179E+01	.000E+00
3.	3.	.092	.091	0.191	-.320E+00	.000E+00	-.186E+01	.000E+00
3.	4.	.152	.114	0.216	-.414E+00	.000E+00	-.147E+01	.000E+00
3.	5.	.220	.135	0.259	-.585E+00	.207E+00	-.585E+00	-.207E+00
3.	6.	.281	.150	0.311	.453E+00	.000E+00	-.425E+00	.000E+00
4.	2.	.023	.058	0.283	-.268E+00	.000E+00	-.208E+01	.000E+00
4.	3.	.102	.082	0.330	-.430E+00	.000E+00	-.192E+01	.000E+00
4.	4.	.190	.103	0.395	-.723E+00	.000E+00	-.129E+01	.000E+00
4.	5.	.278	.120	0.471	-.631E+00	.595E+00	-.631E+00	-.595E+00
4.	6.	.352	.132	0.552	-.114E-01	.387E+00	-.114E-01	-.387E+00
5.	2.	.006	.057	0.488	-.286E+00	.000E+00	-.215E+01	.000E+00
5.	3.	.103	.076	0.577	-.545E+00	.000E+00	-.187E+01	.000E+00
5.	4.	.208	.093	0.689	-.102E+01	.471E+00	-.102E+01	-.471E+00
5.	5.	.306	.105	0.815	-.620E+00	.892E+00	-.620E+00	-.892E+00
5.	6.	.382	.113	0.940	.250E-01	.777E+00	.250E-01	-.777E+00
6.	3.	.081	.071	1.100	-.573E+00	.000E+00	-.181E+01	.000E+00
6.	4.	.191	.083	1.263	-.979E+00	.685E+00	-.979E+00	-.685E+00
6.	5.	.288	.091	1.446	-.552E+00	.107E+01	-.552E+00	-.107E+01
6.	6.	.350	.094	1.623	.125E+00	.929E+00	.125E+00	-.929E+00

TABLE E-20

STRAIGHT CØURSE EQUILIBRIUM AND STABILITY

BETA=20. DEG XG= .8 ZG=-0.75

CV	T	CDEL	DRAFT	EHP	DIRECTIØNAL STABILITY RØØTS REAL	IMAG	REAL	IMAG
2.	2.	.113	.104	0.079	-.281E+00	.000E+00	-.119E+01	.000E+00
2.	3.	.089	.110	0.063	-.242E+00	.000E+00	-.156E+01	.000E+00
2.	4.	.103	.124	0.072	-.245E+00	.000E+00	-.142E+01	.000E+00
2.	5.	.045	.087	0.074	-.874E-01	.000E+00	-.147E+01	.000E+00
2.	6.	.054	.096	0.091	.246E+00	.000E+00	-.712E+00	.000E+00
3.	2.	.059	.071	0.203	-.261E+00	.000E+00	-.181E+01	.000E+00
3.	3.	.089	.089	0.188	-.313E+00	.000E+00	-.188E+01	.000E+00
3.	4.	.147	.111	0.211	-.403E+00	.000E+00	-.150E+01	.000E+00
3.	5.	.211	.131	0.253	-.600E+00	.174E+00	-.600E+00	-.174E+00
3.	6.	.268	.145	0.301	.407E+00	.000E+00	-.418E+00	.000E+00
4.	2.	.022	.057	0.282	-.266E+00	.000E+00	-.208E+01	.000E+00
4.	3.	.099	.081	0.324	-.423E+00	.000E+00	-.194E+01	.000E+00
4.	4.	.184	.101	0.385	-.692E+00	.000E+00	-.134E+01	.000E+00
4.	5.	.268	.117	0.457	-.641E+00	.580E+00	-.641E+00	-.580E+00
4.	6.	.336	.127	0.532	-.251E-01	.397E+00	-.251E-01	-.397E+00
5.	2.	.006	.057	0.487	-.285E+00	.000E+00	-.215E+01	.000E+00
5.	3.	.101	.076	0.570	-.536E+00	.000E+00	-.188E+01	.000E+00
5.	4.	.201	.091	0.674	-.102E+01	.441E+00	-.102E+01	-.441E+00
5.	5.	.294	.103	0.791	-.627E+00	.872E+00	-.627E+00	-.872E+00
5.	6.	.362	.109	0.906	.161E-01	.760E+00	.161E-01	-.760E+00
6.	3.	.079	.070	1.094	-.564E+00	.000E+00	-.182E+01	.000E+00
6.	4.	.185	.082	1.245	-.981E+00	.660E+00	-.981E+00	-.660E+00
6.	5.	.276	.089	1.414	-.555E+00	.105E+01	-.555E+00	-.105E+01
6.	6.	.330	.091	1.577	.120E+00	.890E+00	.120E+00	-.890E+00

TABLE E-21

STRAIGHT CØURSE EQUILIBRIUM AND STABILITY

BETA=20. DEG XG= .8 ZG=-1.00

CV	T	CDEL	DRAFT	EHP	DIRECTIØNAL STABILITY RØØTS REAL	IMAG	REAL	IMAG
2.	2.	.111	.103	0.079	-.277E+00	.000E+00	-.121E+01	.000E+00
2.	3.	.086	.108	0.063	-.237E+00	.000E+00	-.158E+01	.000E+00
2.	4.	.098	.121	0.071	-.236E+00	.000E+00	-.146E+01	.000E+00
2.	5.	.048	.088	0.075	-.901E-01	.000E+00	-.145E+01	.000E+00
2.	6.	.058	.098	0.093	.253E+00	.000E+00	-.699E+00	.000E+00
3.	2.	.058	.070	0.201	-.257E+00	.000E+00	-.182E+01	.000E+00
3.	3.	.086	.088	0.185	-.307E+00	.000E+00	-.190E+01	.000E+00
3.	4.	.141	.109	0.207	-.391E+00	.000E+00	-.154E+01	.000E+00
3.	5.	.203	.127	0.246	-.614E+00	.124E+00	-.614E+00	-.124E+00
3.	6.	.255	.140	0.291	.364E+00	.000E+00	-.414E+00	.000E+00
4.	2.	.022	.057	0.280	-.264E+00	.000E+00	-.209E+01	.000E+00
4.	3.	.096	.080	0.319	-.416E+00	.000E+00	-.195E+01	.000E+00
4.	4.	.178	.099	0.375	-.664E+00	.000E+00	-.138E+01	.000E+00
4.	5.	.258	.114	0.442	-.651E+00	.562E+00	-.651E+00	-.562E+00
4.	6.	.319	.123	0.512	-.388E-01	.401E+00	-.388E-01	-.401E+00
5.	2.	.006	.057	0.487	-.285E+00	.000E+00	-.215E+01	.000E+00
5.	3.	.098	.075	0.563	-.527E+00	.000E+00	-.189E+01	.000E+00
5.	4.	.195	.090	0.659	-.103E+01	.409E+00	-.103E+01	-.409E+00
5.	5.	.283	.100	0.767	-.633E+00	.852E+00	-.633E+00	-.852E+00
5.	6.	.344	.105	0.873	.734E-02	.740E+00	.734E-02	-.740E+00
6.	3.	.077	.070	1.087	-.555E+00	.000E+00	-.183E+01	.000E+00
6.	4.	.179	.081	1.228	-.983E+00	.635E+00	-.983E+00	-.635E+00
6.	5.	.265	.087	1.384	-.559E+00	.102E+01	-.559E+00	-.102E+01
6.	6.	.312	.088	1.533	.116E+00	.851E+00	.116E+00	-.851E+00

TABLE E-22

STRAIGHT COURSE EQUILIBRIUM AND STABILITY

BETA=20. DEG XG=1.2 ZG=-0.50

CV	T	CDEL	DRAFT	EHP	DIRECTIONAL STABILITY ROOTS REAL	IMAG	REAL	IMAG
2.	2.	.222	.154	0.114	-.409E+00	.000E+00	-.148E+01	.000E+00
2.	3.	.192	.165	0.091	-.376E+00	.000E+00	-.170E+01	.000E+00
2.	4.	.218	.191	0.104	-.396E+00	.000E+00	-.153E+01	.000E+00
2.	5.	.025	.074	0.068	-.526E-01	.000E+00	-.225E+01	.000E+00
2.	6.	.028	.082	0.081	.833E-01	.000E+00	-.173E+01	.000E+00
3.	2.	.176	.117	0.329	-.438E+00	.000E+00	-.214E+01	.000E+00
3.	3.	.210	.140	0.307	-.536E+00	.000E+00	-.212E+01	.000E+00
3.	4.	.283	.170	0.334	-.730E+00	.000E+00	-.173E+01	.000E+00
3.	5.	.375	.200	0.387	-.968E+00	.452E+00	-.968E+00	-.452E+00
3.	6.	.473	.227	0.460	-.514E+00	.593E+00	-.514E+00	-.593E+00
4.	2.	.135	.091	0.512	-.478E+00	.000E+00	-.253E+01	.000E+00
4.	3.	.240	.124	0.582	-.856E+00	.000E+00	-.218E+01	.000E+00
4.	4.	.358	.155	0.666	-.141E+01	.653E+00	-.141E+01	-.653E+00
4.	5.	.484	.181	0.763	-.114E+01	.117E+01	-.114E+01	-.117E+01
4.	6.	.608	.204	0.870	-.686E+00	.142E+01	-.686E+00	-.142E+01
5.	3.	.252	.110	0.970	-.141E+01	.000E+00	-.188E+01	.000E+00
5.	4.	.414	.139	1.171	-.152E+01	.127E+01	-.152E+01	-.127E+01
5.	5.	.573	.163	1.356	-.124E+01	.183E+01	-.124E+01	-.183E+01
5.	6.	.720	.182	1.534	-.767E+00	.216E+01	-.767E+00	-.216E+01
6.	3.	.214	.093	1.555	-.170E+01	.207E+00	-.170E+01	-.207E+00
6.	4.	.421	.121	1.957	-.156E+01	.167E+01	-.156E+01	-.167E+01
6.	5.	.608	.142	2.289	-.126E+01	.234E+01	-.126E+01	-.234E+01
6	6.	.770	.157	2.585	-.759E+00	.275E+01	-.759E+00	-.275E+01

TABLE E-23

STRAIGHT COURSE EQUILIBRIUM AND STABILITY

BETA=20. DEG XG=1.2 ZG=-0.75

CV	T	CDEL	DRAFT	EHP	DIRECTIONAL STABILITY ROOTS REAL	IMAG	REAL	IMAG
2.	2.	.219	.152	0.113	-.404E+00	.000E+00	-.150E+01	.000E+00
2.	3.	.188	.163	0.090	-.369E+00	.000E+00	-.172E+01	.000E+00
2.	4.	.212	.188	0.102	-.386E+00	.000E+00	-.156E+01	.000E+00
2.	5.	.026	.075	0.068	-.531E-01	.000E+00	-.225E+01	.000E+00
2.	6.	.029	.083	0.081	.833E-01	.000E+00	-.173E+01	.000E+00
3.	2.	.173	.116	0.326	-.432E+00	.000E+00	-.215E+01	.000E+00
3.	3.	.206	.139	0.303	-.526E+00	.000E+00	-.213E+01	.000E+00
3.	4.	.277	.168	0.328	-.711E+00	.000E+00	-.176E+01	.000E+00
3.	5.	.366	.196	0.380	-.977E+00	.426E+00	-.977E+00	-.426E+00
3.	6.	.461	.222	0.450	-.529E+00	.591E+00	-.529E+00	-.591E+00
4.	2.	.131	.090	0.504	-.468E+00	.000E+00	-.254E+01	.000E+00
4.	3.	.234	.123	0.572	-.833E+00	.000E+00	-.221E+01	.000E+00
4.	4.	.350	.152	0.652	-.141E+01	.618E+00	-.141E+01	-.618E+00
4.	5.	.472	.178	0.745	.115E+01	.115E+01	-.115E+01	-.115E+01
4.	6.	.591	.199	0.848	-.693E+00	.140E+01	-.693E+00	-.140E+01
5.	3.	.244	.108	0.951	-.131E+01	.000E+00	-.197E+01	.000E+00
5.	4.	.403	.136	1.145	-.152E+01	.123E+01	-.152E+01	-.123E+01
5.	5.	.556	.159	1.322	-.124E+01	.179E+01	-.124E+01	-.179E+01
5.	6.	.696	.177	1.492	-.768E+00	.212E+01	-.768E+00	-.212E+01
6.	3.	.206	.092	1.528	-.151E+01	.000E+00	-.189E+01	.000E+00
6.	4.	.407	.118	1.915	-.156E+01	.162E+01	-.156E+01	-.162E+01
6.	5.	.585	.138	2.231	-.125E+01	.228E+01	-.125E+01	-.228E+01
6.	6.	.737	.152	2.510	-.752E+00	.267E+01	-.752E+00	-.267E+01

TABLE E-24

STRAIGHT COURSE EQUILIBRIUM AND STABILITY

BETA=20. DEG XG=1.2 ZG=-1.00

					DIRECTIONAL STABILITY ROOTS			
CV	T	CDEL	DRAFT	EHP	REAL	IMAG	REAL	IMAG
2.	2.	.216	.151	0.112	-.398E+00	.000E+00	-.151E+01	.000E+00
2.	3.	.184	.161	0.089	-.362E+00	.000E+00	-.174E+01	.000E+00
2.	4.	.207	.185	0.100	-.377E+00	.000E+00	-.159E+01	.000E+00
2.	5.	.026	.075	0.068	-.536E-01	.000E+00	-.225E+01	.000E+00
2.	6.	.030	.083	0.082	.834E-01	.000E+00	-.173E+01	.000E+00
3.	2.	.170	.115	0.322	-.426E+00	.000E+00	-.216E+01	.000E+00
3.	3.	.201	.137	0.298	-.517E+00	.000E+00	-.215E+01	.000E+00
3.	4.	.271	.165	0.322	-.692E+00	.000E+00	-.179E+01	.000E+00
3.	5.	.357	.193	0.372	-.987E+00	.396E+00	-.987E+00	-.396E+00
3.	6.	.448	.217	0.439	-.544E+00	.585E+00	-.544E+00	-.585E+00
4.	2.	.127	.089	0.496	-.458E+00	.000E+00	-.255E+01	.000E+00
4.	3.	.228	.121	0.562	-.811E+00	.000E+00	-.223E+01	.000E+00
4.	4.	.341	.150	0.639	-.141E+01	.581E+00	-.141E+01	-.581E+00
4.	5.	.460	.174	0.728	-.115E+01	.113E+01	-.115E+01	-.113E+01
4.	6.	.574	.194	0.826	-.700E+00	.138E+01	-.700E+00	-.138E+01
5.	3.	.238	.107	0.933	-.124E+01	.000E+00	-.205E+01	.000E+00
5.	4.	.392	.134	1.119	-.152E+01	.120E+01	-.152E+01	-.120E+01
5.	5.	.539	.156	1.288	-.124E+01	.175E+01	-.124E+01	-.175E+01
5.	6.	.672	.172	1.450	-.768E+00	.207E+01	-.768E+00	-.207E+01
6.	3.	.199	.091	1.503	-.136E+01	.000E+00	-.204E+01	.000E+00
6.	4.	.393	.116	1.873	-.155E+01	.157E+01	-.155E+01	-.157E+01
6.	5.	.564	.135	2.174	-.125E+01	.222E+01	-.125E+01	-.222E+01
6.	6.	.705	.147	2.437	-.744E+00	.259E+01	-.744E+00	-.259E+01

TABLE E-25

CRAFT PARAMETERS FOR BOAT TESTED IN REFERENCE 9

Boat Parameters

x'_G	1.099
y'_G	0
z'_G	-0.442
R'_x	2.68
R'_y	19.3
R'_z	18.4

Engine Parameters

b_1	-0.05170
b_2	-0.5658
b_3	-1.5803
θ_P	0
η_E	0.85
γ_E	1.923
ω'_{ER}	218

Propeller Parameters

ξ'_{TP}	-0.0626	
ζ'_{TP}	-0.322	
ξ'_{TA}	-0.0562	
η'_{TA}	0	
ζ'_{TA}	0.450	
D'_P	0.2	
Pitch	1.2	
BAR	0.65	0.50
K_{To}	0.339	0.317
K_{TJ}	-0.05739	-0.04754
K_{TJJ}	0.0008928	0.0001786
K_{Qo}	0.062	0.058
K_{QJ}	-0.009536	-0.008286
K_{QJJ}	0.0001786	0.0001429

Rudder Parameters

ξ'_{RP}	-0.0543
ζ'_{RP}	0
A_R	1.25
S'_R	0.0362
C_{DoR}	0.008

Boat Parameters in Engineering Units

Beam, ft	5.56
Weight, lb	2356
LCG, ft fwd of transom	6.11
VCG, ft above keel	2.46
n_{ER}, rpm	5000

TABLE E-26

TURNING EQUILIBRIUM CONDITIONS

	β_H	BAR	C_V	θ	z_T'	C_Δ	ω_P'	HP_{ER}'	ω'	α	φ	ψ_P
1	15	.65	3.836	2.960	.09925	.22	75.51	.6062	0	2.960	1.856	-.0614
2	15	.65	4.000	2.915	.09535	.22	77.20	.6253	0	2.915	1.935	-.0633
3	15	.65	2.000	4.585	.1763	.22	58.26	.4486	0	4.584	1.126	-.0557
4	15	.65	3.000	3.339	.1249	.22	67.28	.5230	0	3.338	1.491	-.0543
5	15	.65	5.000	2.752	.07834	.22	89.14	.7886	0	2.752	2.562	-.0839
6	15	.65	6.000	2.725	.07198	.22	105.86	1.1289	0	2.726	3.770	-.1348
7	15	.65	4.000	3.545	.1117	.3	80.68	.6837	0	3.545	1.547	-.0568
8	15	.65	4.000	1.978	.06650	.1	71.66	.5399	0	1.980	3.883	-.1142
9	10	.65	4.000	2.838	.07854	.22	73.05	.5607	0	2.838	1.663	-.0614
10	10	.65	2.000	4.856	.1409	.22	57.06	.4340	0	4.853	1.050	-.0772
11	10	.65	3.000	3.630	.1044	.22	63.01	.4657	0	3.629	1.233	-.0516
12	20	.65	2.000	1.522	.1363	.22	53.54	.3923	0	1.522	0.935	-.0264
13	20	.65	3.000	3.743	.1447	.22	67.87	.5314	0	3.743	1.509	-.0642
14	20	.65	4.000	3.326	.1173	.22	80.40	.6788	0	3.326	2.162	-.0779
15	15	.65	3.817	2.936	.09960	.22	75.46	.6062	-.01855	2.900	3.680	-1.
16	15	.65	3.757	2.858	.1007	.22	75.28	.6062	-.03915	2.787	5.281	-2.
17	15	.65	3.663	2.711	.1021	.22	74.99	.6062	-.06251	2.614	6.816	-3.
18	15	.65	3.555	2.408	.1023	.22	74.66	.6062	-.09796	2.312	9.971	-3.9
19	15	.65	3.976	3.520	.1124	.3	80.62	.6837	-.01730	3.470	3.305	-1.
20	15	.65	3.901	3.444	.1144	.3	80.40	.6837	-.03558	3.343	4.357	-2.
21	15	.65	3.784	3.323	.1174	.3	80.06	.6837	-.05397	3.172	4.503	-3.
22	15	.65	3.639	3.153	.1208	.3	79.64	.6837	-.07317	2.957	4.240	-4.
23	15	.65	3.473	2.903	.1237	.3	79.16	.6837	-.09577	2.672	4.356	-5.
24	15	.65	2.850	3.447	.1308	.22	65.82	.5096	0	3.446	1.428	-.0535
25	15	.65	2.849	3.403	.1306	.22	65.82	.5096	-.02361	3.368	3.566	-1.
26	15	.65	2.836	3.278	.1300	.22	65.78	.5096	-.04699	3.203	4.516	-2.
27	15	.65	2.816	3.081	.1284	.22	65.71	.5096	-.06943	2.968	4.791	-3.
28	15	.65	2.809	2.742	.1241	.22	65.69	.5096	-.09816	2.610	6.210	-4.
29	15	.50	3.836	2.960	.09925	.22	76.60	.5957	0	2.960	1.833	-.0606
30	15	.50	3.	2.936	.09960	.22	76.55	.5957	-.01856	2.900	3.658	-1.
31	15	.50	3.7[illegible]	2.858	.1007	.22	76.38	.5957	-.03917	2.787	5.261	-2.
32	15	.50	3.662	2.711	.1021	.22	76.12	.5957	-.06253	2.614	6.799	-3.

GPO 899-240