UNCLASSIFIED

## AD NUMBER

**AD843725**

## NEW LIMITATION CHANGE

TO

**Approved for public release, distribution unlimited**

FROM

**Distribution authorized to U.S. Gov't. agencies and their contractors; Administrative/Operational Use; 11 Sep 1968. Other requests shall be referred to U.S. Army Missile Command, Attn: AMSMI-RE, Redstone Arsenal, AL 35809.**

## AUTHORITY

**USAMC ltr, 23 Aug 1971**

THIS PAGE IS UNCLASSIFIED

AD

AD843725

REPORT NO. RE-TR-68-15

# OPTIMAL CONTROLLERS FOR HOMING MISSILES

by

G. Willems

September 1968

*This document is subject to special export controls and each transmittal to foreign governments or foreign nationals may be made only with prior approval of this Command, ATTN: AMSMI-RE.*

U.S. ARMY MISSILE COMMAND
Redstone Arsenal, Alabama

DDC
NOV 26 1968

M AMSMI-1021, 1 DEC 65 PREVIOUS EDITION IS OBSOLETE

11 September 1968

Report No. RE-TR-68-15

# OPTIMAL CONTROLLERS FOR HOMING MISSILES

by

G. Willems

DA Project No. 1X263302D212

AMC Management Structure Code No. 5231.12.171

*This document is subject to special export controls and each transmittal to foreign governments or foreign nationals may be made only with prior approval of this Command, ATTN: AMSMI-RE.*

Systems Dynamics Branch
Advanced Sensors Laboratory
Research and Development Directorate
U. S. Army Missile Command
Redstone Arsenal, Alabama 35809

## ABSTRACT

Optimum control theory is applied to develop a guidance law for homing missiles. An existing, closed form, general solution of the "minimum error regulator" problem is applied to a previously solved problem which uses a very simple plant model, in order to verify its applicability. The solution method is then applied to a system that includes autopilot lag, and in this case the optimum law is shown to differ from proportional navigation.

## CONTENTS


| | | Page |
|---|---|---|
| Section I. | INTRODUCTION | 1 |
| Section II. | THE MINIMUM ERROR REGULATOR PROBLEM | 2 |
| Section III. | OPTIMUM CONTROLLER FOR SIMPLIFIED HOMING SYSTEMS | 5 |
| Section IV. | OPTIMUM CONTROLLER FOR HOMING SYSTEMS WITH AUTOPILOT LAG | 16 |
| Section V. | CONCLUSIONS | 31 |


## ILLUSTRATIONS


| Figure | | Page |
|---|---|---|
| 1 | Optimal Control System | 3 |
| 2 | Typical Homing Block Diagram | 5 |
| 3 | Rearranged Homing Block Diagram | 6 |
| 4 | Simplified Homing System | 7 |
| 5 | Augmented Homing System | 17 |
| 6 | Plots of Navigation Ratio Versus Time to Go | 30 |

BLANK PAGE

## Section I. INTRODUCTION

The technique of proportional navigation has been found to be the most satisfactory method of guiding homing missiles — a fact established by engineers through many years of design experience rather than by analytical proof. In proportional navigation, an attempt is made to mechanize the following equation:

$$\dot{\gamma} = N'\dot{\Lambda} \; ; \qquad 2 < N' \leq 5 \; ,$$

where $\dot{\gamma}$ is the missile angular turning rate and $\dot{\Lambda}$ is the line-of-sight angular rate referred to inertial space. N' is denoted as the "Navigation Ratio," and again, the range of acceptable values has been developed mainly through experience. It is interesting to note that recently it has been rigorously determined by means of modern control theory that proportional navigation is indeed optimal in that for unconstrained control effort, the miss distance at intercept is minimized in the mean-squared sense. The correspondence between proportional navigation and optimum control has been demonstrated by Bryson, Ho, and Baron,[1] Janus,[2] and Speyer,[3] among others.

The purpose of this study is to cast the simplified homing problem solved by Speyer in the above referenced report as a "minimum error regulator" problem. This problem is solved in closed form by Ogata,[4] who used the generalized quadratic index as a performance criterion. It will be shown that the Ogata method yields identical results to the Speyer variational solution, and can thus be verified to be applicable to the problem. The problem is then extended to include autopilot lag, and a new solution obtained, from which several interesting conclusions can be drawn regarding the form of the control law and the nature of the navigation ratio.

---

[1]Y. C. Ho, A. E. Bryson, S. Baron, "Differential Games and Optimal Pursuit-Evasion Strategies," IEEE Transactions on Automatic Control, AC-10, No. 4, October 1965, pp. 385-389.

[2]J. P. Janus, Homing Guidance, Aerospace Corporation, El Segundo, California, Report No. TOR-469(9990)-1, December 1964.

[3]J. Speyer, Optimal Control Theory and Biased Proportional Navigation, Raytheon Corporation, Bedford, Massachusetts, Memo SAD-330, November 1967.

[4]K. Ogata, State Space Analysis of Control Systems, Englewood Cliffs, New Jersey, Prentice-Hall, 1964, pp. 547-557.

## Section II. THE MINIMUM ERROR REGULATOR PROBLEM

Any linear dynamical system of the $n^{th}$ order can be expressed either as an $n^{th}$ order differential equation or a set of n first order differential equations. The latter is known as the state formulation, and is used herein, since it lends itself to matrix-vector notation and manipulation. It will be assumed that the system differential equation is given by:

$$\dot{x} = Ax + Bu \; ; \qquad x(0) = C \; ,$$

where

$x$ = n dimensional column state vector

$u$ = r dimensional control vector

$A$ = $n \times n$ matrix

$B$ = $n \times r$ matrix

and where the following index is to be minimized:

$$J(C,T) = \underbrace{x^*(T)Px(T)}_{\substack{\text{Terminal}\\ \text{state}\\ \text{weighting}}} + \int_0^T \underbrace{x^*(t)Qx(t)\,dt}_{\substack{\text{State}\\ \text{weighting}}} + \int_0^T \underbrace{u^*(t)R(t)u(t)\,dt}_{\text{Control cost}}$$

where the * symbol denotes the conjugate transpose of the vector, or simply the transpose for real vectors, and P, Q(t), R(t) are matrices of appropriate dimensions.

Ogata shows that the optimum controller for such a system can be obtained by solving the nonhomogeneous matrix Riccati equation:

$$\frac{ds}{dt} = -sA - A^*s + sBR^{-1}(0)B^*s = Q(0) \; .$$

If the matrices A and B are constant, i.e., if the system is stationary, the above matrix equation can be solved in closed form for the time T:

$$s(T) = \{[\phi_{21}(T) + \phi_{22}(T)P][\phi_{11}(T) + \phi_{12}(T)P]^{-1}\} \quad ,$$

where the $\phi_{ij}$ are obtained from partitioning the matrix

$$e^{MT} \triangleq \left[\begin{array}{c|c} \phi_{11}(T) & \phi_{12}(T) \\ \hline \phi_{21}(T) & \phi_{22}(T) \end{array}\right]$$

and M is defined as

$$M = \left[\begin{array}{c|c} -A & BR^{-1}(0)B^* \\ \hline Q(0) & A^* \end{array}\right]$$

from which it can be seen that M is known from the problem statement and the performance index.

Once s(T) is known, the optimum control vector can be obtained from the expression

$$u_{opt}(t) = -F(T - t)x(t) \quad ,$$

where

$$F(T - t) = R^{-1}(t)B^* s(T - t) \quad .$$

In block diagram form, the optimum controller can be depicted as in Figure 1.

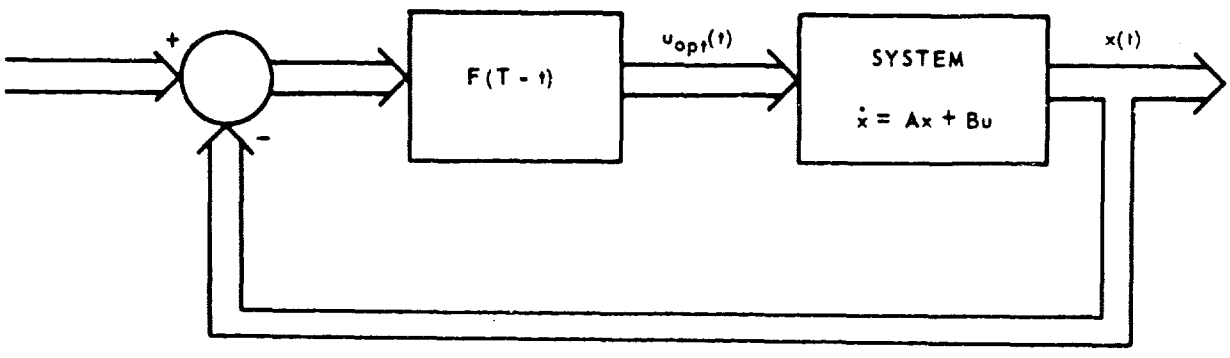


FIGURE 1. OPTIMAL CONTROL SYSTEM

The solution of the subject problem can then be summarized as follows:

1) From system state equations, and the given performance index, the following matrices are known:

$$A,\ B,\ P,\ Q,\ R$$

2) The matrix M can be formed from above

$$M = \left[\begin{array}{c|c} -A & BR^{-1}(0)B^* \\ \hline Q(0) & A^* \end{array}\right]$$

3) From knowledge of M, $e^{MT}$ can be found. There are several methods for computing this, but the use of the Laplace transform is often the most convenient. This method involves the relationship

$$\mathcal{L}\left[e^{MT}\right] = [sI - M]^{-1}$$

where s is the Laplace operator and I the unit matrix.

4) Once $e^{MT}$ is known, all of the $\phi_{ij}$ are obtained from the relation

$$e^{MT} = \left[\begin{array}{c|c} \phi_{11}(T) & \phi_{12}(T) \\ \hline \phi_{21}(T) & \phi_{22}(T) \end{array}\right]$$

From this, s(T) can be computed:

$$s(T) = \{[\phi_{21}(T) + \phi_{22}(T)P][\phi_{11}(T) + \phi_{12}(T)P]^{-1}\}$$

5) Once s(T) is known, $u_{opt}(t)$ and $F(T - t)$ are immediately obtainable:

$$F(T - t) = R^{-1}(t)B^* s(T - t)$$

$$u_{opt}(t) = F(T - t)x(t) \quad .$$

The optimum system thus mechanized will minimize the given quadratic index in the solution interval $0 \leq t \leq T$. It should be noted that the optimum solution is given in terms of time-to-go $(T - t)$ rather than elapsed time t.

## Section III. OPTIMUM CONTROLLER FOR SIMPLIFIED HOMING SYSTEMS

The conventional overall homing loop can be depicted as shown in Figure 2 and can be readily rearranged with target acceleration as an input in the manner of Figure 3. If the dynamic lags of the seeker, autopilot, and missile are neglected, the very simple model of Figure 4 is obtained. This figure also includes an exponential decay model for target acceleration, this being the model used by Speyer.[5] With reference to this figure, the problem can be stated as follows: Given the observable states $y_d$, $\dot{y}_d$, and $\ddot{y}_t$, the control vector is determined that will minimize the miss distance at intercept only, i.e.,

$$y_d(t)\,|_{t = T} = \text{minimum in the mean-squared sense subject to a constraint on available control effort.}$$

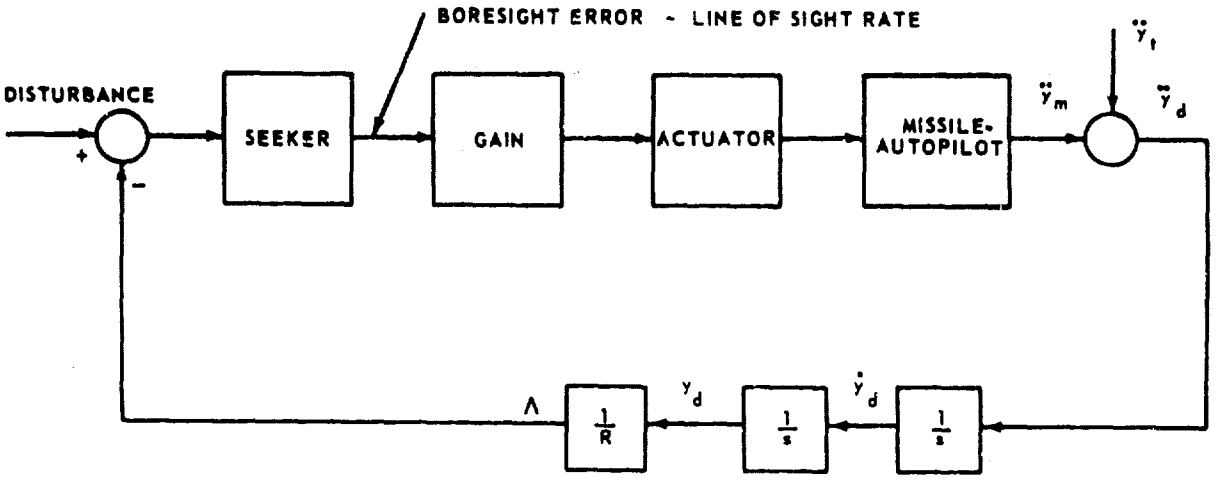


FIGURE 2. TYPICAL HOMING BLOCK DIAGRAM

The state equations can be written directly from Figure 4:

$$\dot{x}_1 = x_2$$

$$\dot{x}_2 = gx_3 - gn_\ell$$

$$\dot{x}_3 = -2\upsilon x_3$$

[5] J. Speyer, op. cit.

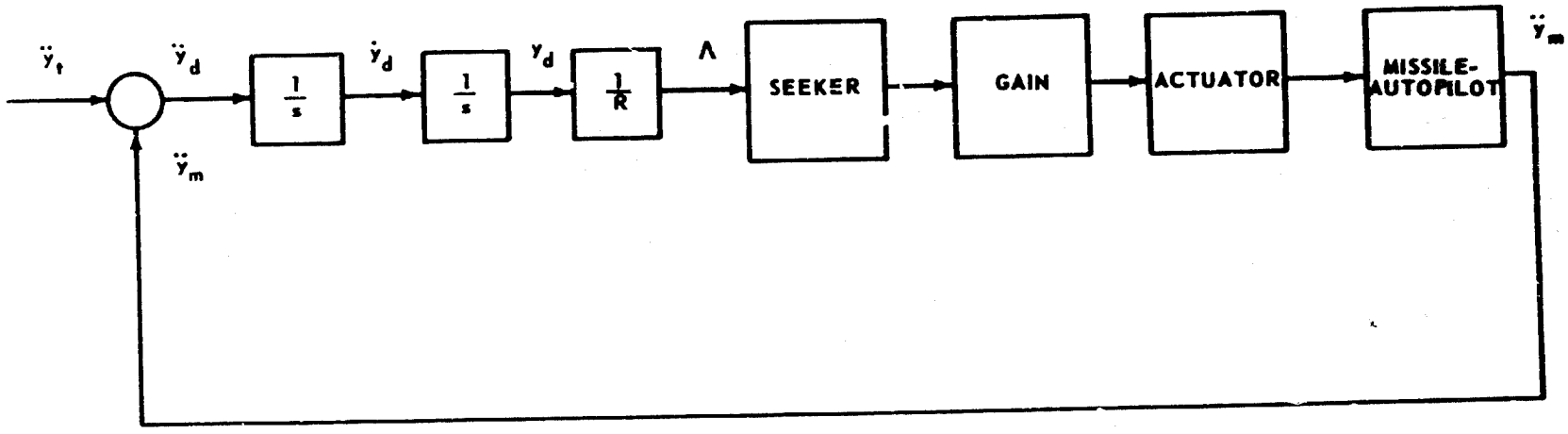


FIGURE 3. REARRANGED HOMING BLOCK DIAGRAM

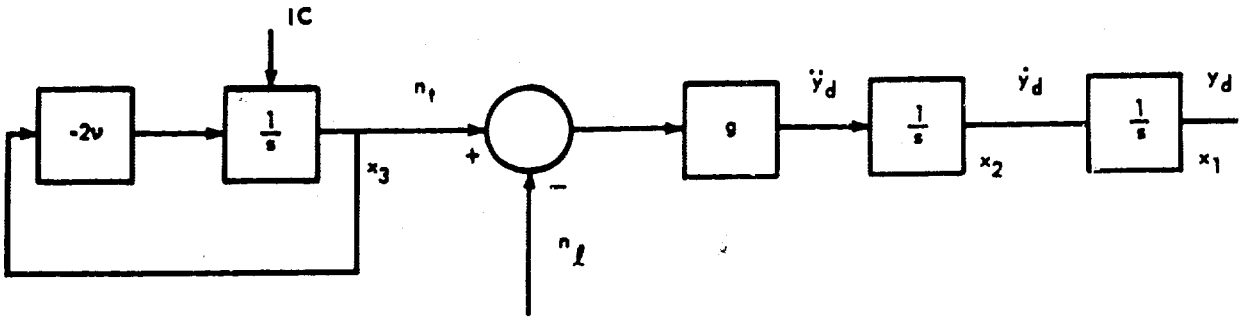


FIGURE 4. SIMPLIFIED HOMING SYSTEM

or, in vector-matrix form $\dot{x} = Ax + Bu$

$$\begin{bmatrix} \dot{x}_1 \\ \dot{x}_2 \\ \dot{x}_3 \end{bmatrix} = \begin{bmatrix} 0 & 1 & 0 \\ 0 & 0 & g \\ 0 & 0 & -2v \end{bmatrix} \begin{bmatrix} x_1 \\ x_2 \\ x_3 \end{bmatrix} + \begin{bmatrix} 0 \\ -g \\ 0 \end{bmatrix} n_\ell$$

The general form of the minimum error regulator law is

$$J = x^*(T)Px(T) + \int_0^T [x^*(t)Q(t)x(t) + u^*(t)R(t)u(t)]dt$$

and must be adapted to the specific problem: A single vector $x_1\left(y_d\right)$ is to be minimized at intercept only. Also, the control vector has a single component, and the control constraint matrix reduces to a scalar. These conditions can be achieved by defining the P, Q, R matrices as follows:

$$P = \begin{bmatrix} 1 & 0 & 0 \\ 0 & 0 & 0 \\ 0 & 0 & 0 \end{bmatrix} \qquad Q = \begin{bmatrix} 0 & 0 & 0 \\ 0 & 0 & 0 \\ 0 & 0 & 0 \end{bmatrix}$$

$$R = \lambda = \text{scalar};$$

therefore

$$R^{-1} = \frac{1}{\lambda} .$$

With these definitions, the index $J$ becomes

$$J = x_1^2(T) + \lambda \int_0^T n_\ell^2 dt \ .$$

The M matrix can now be written, since all of its components are known.

$$M = \left[\begin{array}{ccc|ccc} 0 & -1 & 0 & 0 & 0 & 0 \\ 0 & 0 & -g & 0 & g^2/\lambda & 0 \\ 0 & 0 & 2\upsilon & 0 & 0 & 0 \\ \hline 0 & 0 & 0 & 0 & 0 & 0 \\ 0 & 0 & 0 & 1 & 0 & 0 \\ 0 & 0 & 0 & 0 & g & -2\upsilon \end{array}\right]$$

To compute $e^{MT}$, the matrix $[sI - M]$ is needed

$$[sI - M] = \begin{bmatrix} s & 1 & 0 & 0 & 0 & 0 \\ 0 & s & g & 0 & -g^2/\lambda & 0 \\ 0 & 0 & s - 2\upsilon & 0 & 0 & 0 \\ 0 & 0 & 0 & s & 0 & 0 \\ 0 & 0 & 0 & -1 & s & 0 \\ 0 & 0 & 0 & 0 & -g & s + 2\upsilon \end{bmatrix}$$

This matrix must now be inverted. Since it is almost in upper triangular form, the simplest method of inversion is to append a unit matrix and transform the combined matrix to upper triangular form by means of elementary transformations. This step yields

$$
\left[\begin{array}{cccccc|cccccc}
s & 1 & 0 & 0 & 0 & 0 & 1 & 0 & 0 & 0 & 0 & 0 \\
0 & s & g & 0 & -g^2/\lambda & 0 & 0 & 1 & 0 & 0 & 0 & 0 \\
0 & 0 & s-2\upsilon & 0 & 0 & 0 & 0 & 0 & 1 & 0 & 0 & 0 \\
0 & 0 & 0 & s & 0 & 0 & 0 & 0 & 0 & 1 & 0 & 0 \\
0 & 0 & 0 & 0 & s & 0 & 0 & 0 & 0 & 1/s & 1 & 0 \\
0 & 0 & 0 & 0 & 0 & s+2\upsilon & 0 & 0 & 0 & g/s^2 & g/s & 1
\end{array}\right] = [sI - M]
$$

The inverse is obtained by solving the above matrix as six equations in six unknowns, using each of the six column vectors to the right of the dashed line in turn. Since the coefficient matrix is upper triangular, this step is rather simple, and the inverse becomes:

$$
[sI - M]^{-1} = \begin{bmatrix}
\frac{1}{s} & -\frac{1}{s^2} & \frac{g}{s^2(s-2\upsilon)} & -\frac{g^2/\lambda}{s^4} & -\frac{g^2/\lambda}{s^3} & 0 \\
0 & \frac{1}{s} & \frac{-g}{s(s-2\upsilon)} & \frac{g^2/\lambda}{s^3} & \frac{g^2/\lambda}{s^2} & 0 \\
0 & 0 & \frac{1}{s-2\upsilon} & 0 & 0 & 0 \\
0 & 0 & 0 & \frac{1}{s} & 0 & 0 \\
0 & 0 & 0 & \frac{1}{s^2} & \frac{1}{s} & 0 \\
0 & 0 & 0 & \frac{g}{s^2(s+2\upsilon)} & \frac{g}{s(s+2\upsilon)} & \frac{1}{s+2\upsilon}
\end{bmatrix}
$$

The correctness of the above matrix can be verified by observation of the product

$$[sI - M]^{-1}[sI - M] = I \ .$$

The $\phi_{ij}$ can now be obtained from the above matrix as follows:

$$\phi_{11}(t) = \mathcal{L}^{-1}\begin{bmatrix} \frac{1}{s} & -\frac{1}{s^2} & \frac{g}{s^2(s-2\upsilon)} \\ 0 & \frac{1}{s} & \frac{-g}{s(s-2\upsilon)} \\ 0 & 0 & \frac{1}{s-2\upsilon} \end{bmatrix}$$

$$\phi_{12}(t) = \mathcal{L}^{-1}\frac{1}{\lambda}\begin{bmatrix} -\frac{g^2}{s^4} & -\frac{g^2}{s^3} & 0 \\ \frac{g^2}{s^3} & \frac{g^2}{s^2} & 0 \\ 0 & 0 & 0 \end{bmatrix}$$

$$\phi_{21}(t) = \mathcal{L}^{-1}\begin{bmatrix} 0 & 0 & 0 \\ 0 & 0 & 0 \\ 0 & 0 & 0 \end{bmatrix}$$

$$\phi_{22}(t) = \mathcal{L}^{-1}\begin{bmatrix} \frac{1}{s} & 0 & 0 \\ \frac{1}{s^2} & \frac{1}{s} & 0 \\ \frac{g}{s^2(s+2\upsilon)} & \frac{g}{s(s+2\upsilon)} & \frac{1}{s+2\upsilon} \end{bmatrix}$$

The next step requires computation of $s(T - t)$. However, since $s(T - t) = s(t)$ at $t = T - t$, we may compute $s(t)$ first. The multiplications $\phi_{12}P$ and $\phi_{22}P$ can be performed before taking the inverse transform, since P is a number matrix.

$$\phi_{12}P = \mathcal{L}^{-1}\frac{1}{\lambda}\begin{bmatrix} -\frac{g^2}{s^4} & 0 & 0 \\ \frac{g^2}{s^3} & 0 & 0 \\ 0 & 0 & 0 \end{bmatrix} \qquad \phi_{22}P = \mathcal{L}^{-1}\begin{bmatrix} \frac{1}{s} & 0 & 0 \\ \frac{1}{s^2} & 0 & 0 \\ \frac{g}{s^2(s+2\upsilon)} & 0 & 0 \end{bmatrix}$$

$$\phi_{21}(t) + \phi_{22}(t)P = \mathcal{L}^{-1}[\phi_{21}(s) + \phi_{22}(s)P]$$

$$= \mathcal{L}^{-1}\begin{bmatrix} \frac{1}{s} & 0 & 0 \\ \frac{1}{s^2} & 0 & 0 \\ \frac{g}{s^2(s+2\upsilon)} & 0 & 0 \end{bmatrix} = \begin{bmatrix} h & 0 & 0 \\ i & 0 & 0 \\ j & 0 & 0 \end{bmatrix}$$

$$\phi_{11}(t) + \phi_{12}(t)P = \mathcal{L}^{-1}\begin{bmatrix} \frac{s^3 - g^2/\lambda}{s^4} & -\frac{1}{s^2} & \frac{g}{s^2(s-2\upsilon)} \\ \frac{g^2/\lambda}{s^3} & \frac{1}{s} & \frac{-g}{s(s-2\upsilon)} \\ 0 & 0 & \frac{1}{s-2\upsilon} \end{bmatrix}$$

$$= \begin{bmatrix} a & b & c \\ d & e & f \\ 0 & 0 & k \end{bmatrix}$$

The a...k in the above matrices are symbolic representations for the inverse transform of the actual matrix elements. In order to obtain s(t), the matrix $[\phi_{11} + \phi_{12}P]$ must be inverted. Performance of this step on the symbolic representation yields:

$$[\phi_{11}(t) + \phi_{12}(t)P]^{-1} = \frac{1}{ak(ae - db)}\begin{bmatrix} ake & -akb & baf - cae \\ -akd & -a^2k & adc - a^2f \\ 0 & 0 & a(ae - db) \end{bmatrix}$$

Then $s(t)$ can be obtained by multiplication:

$$s(t) = \frac{1}{ak(ae - db)} \begin{bmatrix} akeh & -akbh & (baf - cae)h \\ akei & -akbi & (baf - cae)i \\ akej & -akbj & (baf - cae)j \end{bmatrix}$$

The function $F(T - t)$ can now be readily computed, since

$$F(T - t) = R^{-1}B^{*}s(T - t) = \frac{1}{\lambda}[0 \quad -g \quad 0]s(t)$$

$$F(T - t) = \frac{1}{\lambda ak(ae - db)}[-akeig \quad akbig \quad -(baf - cae)ig]_{t = T - t}$$

$$= \frac{ig}{\lambda(ae - bd)}\begin{bmatrix} -e & b & -\frac{(bf - ce)}{k} \end{bmatrix}_{t = T - t}$$

The actual vector $F(T - t)$ can be obtained by evaluating the inverse transform of the above elements:

$$a = \mathcal{L}^{-1}\left(\frac{s^3 - g^2/\lambda}{s^4}\right) = 1 - \frac{g^2t^3}{6\lambda} \qquad b = \mathcal{L}^{-1}\left(-\frac{1}{s^2}\right) = -t$$

$$c = \mathcal{L}^{-1}\left(\frac{g}{s^2(s - 2\upsilon)}\right) = -\frac{g}{2\upsilon}\left[t + \frac{1 - e^{2\upsilon t}}{2\upsilon}\right]$$

$$d = \mathcal{L}^{-1}\left(\frac{g^2/\lambda}{s^2}\right) = \frac{g^2t^2}{2\lambda} \qquad e = \mathcal{L}^{-1}\left(\frac{1}{s}\right) = 1$$

$$f = \mathcal{L}^{-1}\left(\frac{-g}{s(s - 2\upsilon)}\right) = \frac{g}{2\upsilon}\left(1 - e^{2\upsilon t}\right)$$

$$k = \mathcal{L}^{-1}\left(\frac{1}{s - 2\upsilon}\right) = e^{2\upsilon t} \qquad i = \mathcal{L}^{-1}\left(\frac{1}{s^2}\right) = t$$

Introducing above expressions into the $F(T - t)$ vector, and substituting for $t$:

$$t = (T - t) = t_{go}$$

$$F(T - t) = F\left(t_{go}\right) = \frac{g t_{go}}{\lambda + \frac{1}{3} g^2 t_{go}^{\,3}} \left\{ -1, -t_{go}, -\frac{g}{4\upsilon^2} \left[ \frac{2\upsilon t_{go} e^{2\upsilon t_{go}} + 1 - e^{2\upsilon t_{go}}}{e^{2\upsilon t_{go}}} \right] \right\}$$

The optimum controller $u_{opt} = -F\left(t_{go}\right) [x_1, x_2, x_3]^*$ or,

$$u_{opt} = -N' [-C_1 \quad -C_2 \quad -C_3] \begin{bmatrix} x_1 \\ x_2 \\ x_3 \end{bmatrix}$$

or

$$u_{opt} = N' [C_1 \quad C_2 \quad C_3] \begin{bmatrix} x_1 \\ x_2 \\ x_3 \end{bmatrix}$$

where

$$N' = \frac{3 g^2 t_{go}^{\,3}}{3\lambda + g^2 t_{go}^{\,3}}$$

$$C_1 = \frac{1}{g t_{go}^{\,2}}$$

$$C_2 = \frac{1}{g t_{go}}$$

$$C_3 = \frac{2\upsilon t_{go} e^{2\upsilon t_{go}} + 1 - e^{2\upsilon t_{go}}}{4\upsilon^2 e^{2\upsilon t_{go}} t_{go}^{\,2}} = \frac{2\upsilon t_{go} + e^{-2\upsilon t_{go}} - 1}{4\upsilon^2 t_{go}^{\,2}}$$

In terms of the original system parameters, the expression for $u_{opt}$ can be written:

$$u_{opt} = n_\ell = \frac{N'}{gt_{go}}\left(\frac{y_d}{t_{go}} + \dot{y}_d\right) + N'\left[\frac{e^{-2\upsilon t_{go}} + 2\upsilon t_{go} - 1}{4\upsilon^2 t_{go}^{\,2}}\right] n_t$$

The above results are identical to those obtained by Speyer[6] by direct use of classical variational methods. Thus, the two techniques are equivalent.

If the control effort constraint is removed, i.e., $\lambda$ is made zero, the term N' becomes

$$N' = \frac{3g^2 t_{go}^{\,2}}{g^2 t_{go}^{\,2}} = 3 \ ,$$

thus reducing to a conventional navigation ratio. Also since the angle $\Lambda$ is approximately equal to the ratio

$$\Lambda = \frac{y_d}{R}$$

where R = missile to target range, the following is obtained:

$$\dot{\Lambda} = \frac{R\dot{y}_d - y_d\dot{R}}{R^2} \ ,$$

but $\dot{R} = -V_c$ where $V_c$ is the closing velocity, and

$$R = V_c t_{go} \ .$$

Substitution into $\dot{\Lambda}$ equation yields:

$$\dot{\Lambda} = \frac{1}{V_c t_{go}}\left(\dot{y}_d + \frac{y_d}{t_{go}}\right)$$

---

[6] Ibid.

or

$$V_c t_{go} \dot{\Lambda} = \left( \frac{y_d}{t_{go}} + \dot{y}_d \right)$$

This can be substituted into $n_\ell$ equation to render

$$n_\ell = \frac{N' V_c}{g} \dot{\Lambda} + N' \left[ \frac{e^{-2\upsilon t_{go}} + 2\upsilon t_{go} - 1}{4\upsilon^2 t_{go}^{\ 2}} \right] n_t \ ,$$

which, when $\lambda = 0$, is recognized to be the conventional proportional navigation law with a bias correction for target acceleration.

The results to now are not new, as indicated by the previously noted references. The derivations serve as an independent verification of prior work, and also verify the adequacy of the method of solution used. This method will be applied in the next section to the same system, augmented by an autopilot lag.

## Section IV. OPTIMUM CONTROLLER FOR HOMING SYSTEMS WITH AUTOPILOT LAG

Figure 5 depicts the same simplified homing system of the previous section, with the addition of a single time constant $\tau$ between achieved and commanded accelerations. The state equations can be obtained from the figure as:

$$\dot{x}_1 = x_2$$

$$\dot{x}_2 = gx_3 - gx_4$$

$$\dot{x}_3 = -2\upsilon x_3$$

$$\dot{x}_4 = -\frac{x_4}{\tau} + \frac{n_c}{\tau}$$

which in vector matrix form, become

$$\begin{bmatrix} \dot{x}_1 \\ \dot{x}_2 \\ \dot{x}_3 \\ \dot{x}_4 \end{bmatrix} = \begin{bmatrix} 0 & 1 & 0 & 0 \\ 0 & 0 & g & -g \\ 0 & 0 & -2\upsilon & 0 \\ 0 & 0 & 0 & -\omega \end{bmatrix} \begin{bmatrix} x_1 \\ x_2 \\ x_3 \\ x_4 \end{bmatrix} + \begin{bmatrix} 0 \\ 0 \\ 0 \\ \omega \end{bmatrix} n_c$$

where

$$\omega \triangleq \frac{1}{\tau}.$$

The generalized index J

$$J = x^*(T)Px(T) + \int_0^T [x^*(t)Q(t)x(t) + u^*(t)R(t)u(t)]dt$$

is reduced to the desired form by defining

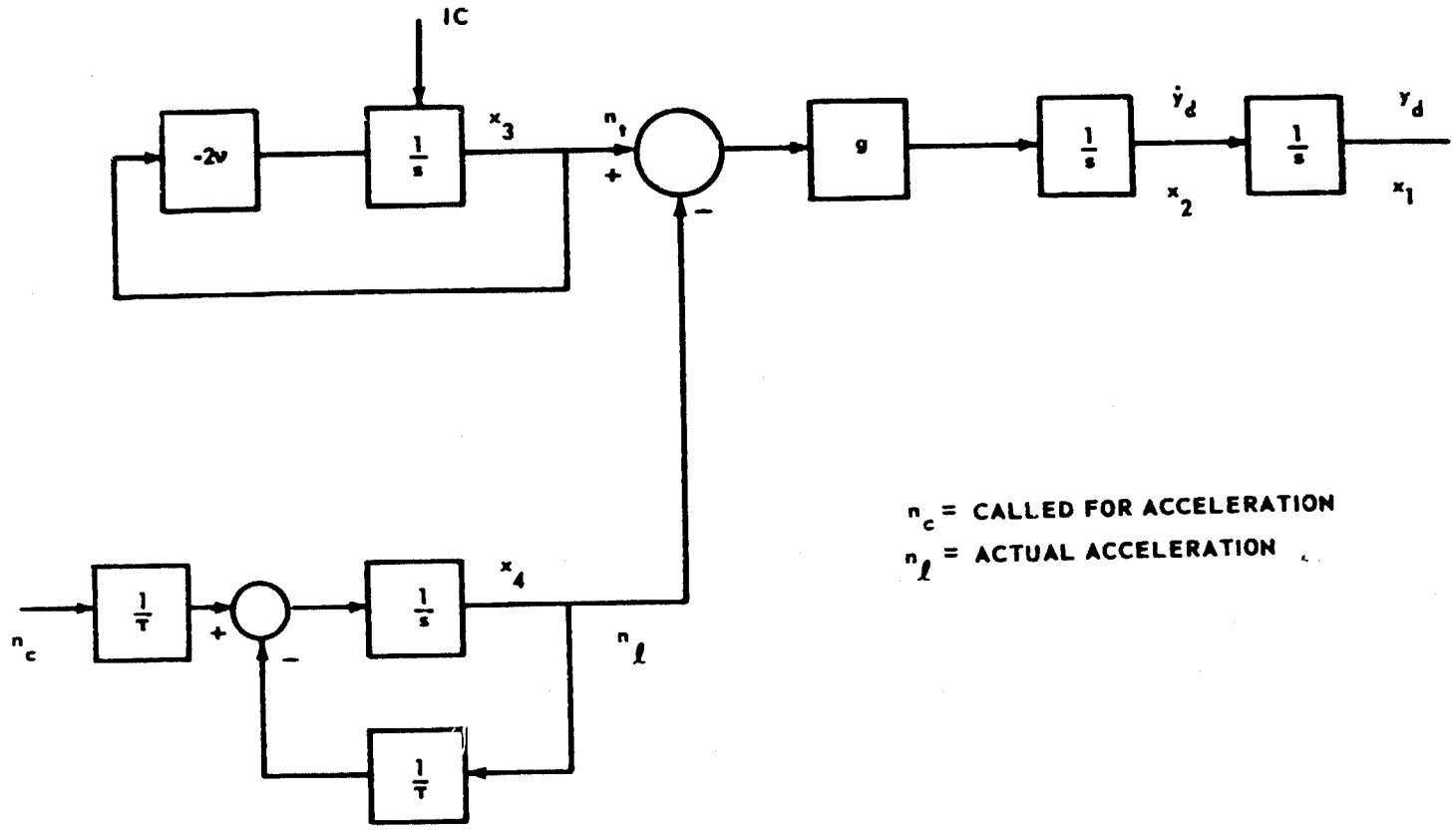


FIGURE 5. AUGMENTED HOMING SYSTEM

$$P = \begin{bmatrix} 1 & 0 & 0 & 0 \\ 0 & 0 & 0 & 0 \\ 0 & 0 & 0 & 0 \\ 0 & 0 & 0 & 0 \end{bmatrix} ; \qquad Q = [0]_{4 \times 4} ; \qquad R = \lambda = \text{scalar}$$

which yields the same form as before:

$$J = x_1(T)^2 + \lambda \int_0^T n_c^{\,2} dt \ .$$

The matrix M is obtained next:

$$M = \left[\begin{array}{cccc|cccc} 0 & -1 & 0 & 0 & 0 & 0 & 0 & 0 \\ 0 & 0 & -g & g & 0 & 0 & 0 & 0 \\ 0 & 0 & 2\upsilon & 0 & 0 & 0 & 0 & 0 \\ 0 & 0 & 0 & \omega & 0 & 0 & 0 & \frac{\omega^2}{\lambda} \\ \hline 0 & 0 & 0 & 0 & 0 & 0 & 0 & 0 \\ 0 & 0 & 0 & 0 & 1 & 0 & 0 & 0 \\ 0 & 0 & 0 & 0 & 0 & g & -2\upsilon & 0 \\ 0 & 0 & 0 & 0 & 0 & -g & 0 & -\omega \end{array}\right]$$

from which $[sI - M]$ can be formed:

$$
[sI - M] = \begin{bmatrix}
s & 1 & 0 & 0 & 0 & 0 & 0 & 0 \\
0 & s & g & -g & 0 & 0 & 0 & 0 \\
0 & 0 & s - 2\upsilon & 0 & 0 & 0 & 0 & 0 \\
0 & 0 & 0 & s - \omega & 0 & 0 & 0 & -\dfrac{\omega^2}{\lambda} \\
0 & 0 & 0 & 0 & s & 0 & 0 & 0 \\
0 & 0 & 0 & 0 & -1 & s & 0 & 0 \\
0 & 0 & 0 & 0 & 0 & -g & s + 2\upsilon & 0 \\
0 & 0 & 0 & 0 & 0 & g & 0 & s + \omega
\end{bmatrix}
$$

This matrix is almost triangular and can be rather easily inverted, by the method outlined in the previous section. This inverse is given by

$$
[sI - M]^{-1} = \left[\begin{array}{cccc|cccc}
\frac{1}{s} & -\frac{1}{s^2} & \frac{g}{s^2(s-2\upsilon)} & \frac{-g}{s^2(s-\omega)} & \frac{g^2\omega^2}{\lambda s^3(s-\omega)(s+\omega)} & \frac{g^2\omega^2}{\lambda s^3(s-\omega)(s+\omega)} & 0 & \frac{-g\omega^2}{\lambda s^2(s-\omega)(s+\omega)} \\
0 & \frac{1}{s} & \frac{-g}{s(s-2\upsilon)} & \frac{g}{s(s-\omega)} & \frac{-g^2\omega^2}{\lambda s^3(s-\omega)(s+\omega)} & \frac{-g^2\omega^2}{\lambda s^2(s-\omega)(s+\omega)} & 0 & \frac{g\omega^2}{\lambda s(s-\omega)(s+\omega)} \\
0 & 0 & \frac{1}{s-2\upsilon} & 0 & 0 & 0 & 0 & 0 \\
0 & 0 & 0 & \frac{1}{s-\omega} & \frac{-g\omega^2}{\lambda s^2(s-\omega)(s+\omega)} & \frac{-g\omega^2}{\lambda s(s-\omega)(s+\omega)} & 0 & \frac{\omega^2}{\lambda(s-\omega)(s+\omega)} \\
\hline
0 & 0 & 0 & 0 & \frac{1}{s} & 0 & 0 & 0 \\
0 & 0 & 0 & 0 & \frac{1}{s^2} & \frac{1}{s} & 0 & 0 \\
0 & 0 & 0 & 0 & \frac{g}{s^2(s+2\upsilon)} & \frac{g}{s(s+2\upsilon)} & \frac{1}{s+2\upsilon} & 0 \\
0 & 0 & 0 & 0 & \frac{-g}{s^2(s+\omega)} & \frac{-g}{s(s+\omega)} & 0 & \frac{1}{s+\omega}
\end{array}\right]
$$

Correctness of this matrix can be verified by multiplying it by $[sI - M]$ and observing that the unit matrix results. The $\phi_{ij}$ are obtained as before from the above matrix, since

$$[sI - M]^{-1} = \begin{bmatrix} \phi_{11}(s) & \phi_{12}(s) \\ \phi_{21}(s) & \phi_{22}(s) \end{bmatrix}$$

The next step in computing $s(t)$ requires formation of the expressions

$$[\phi_{21}(t) + \phi_{22}(t)P]$$

$$[\phi_{11}(t) + \phi_{12}(t)P]$$

Since P is a number matrix, the above expression can be formed before inverse transformation of the $\phi_{ij}$:

$$[\phi_{21}(t) + \phi_{22}(t)P] = \mathcal{L}^{-1} \begin{bmatrix} \frac{1}{s} & 0 & 0 & 0 \\ \frac{1}{s^2} & 0 & 0 & 0 \\ \frac{g}{s^2(s + 2\upsilon)} & 0 & 0 & 0 \\ \frac{-g}{s^2(s + \omega)} & 0 & 0 & 0 \end{bmatrix}$$

$$= \begin{bmatrix} h & 0 & 0 & 0 \\ i & 0 & 0 & 0 \\ j & 0 & 0 & 0 \\ k & 0 & 0 & 0 \end{bmatrix}$$

$$[\phi_{11}(t) + \phi_{12}(t)P] = \mathcal{L}^{-1}\begin{bmatrix} s^3(s-\omega)(s+\omega) + \frac{g^2\omega^2}{\lambda} & -\frac{1}{s^2} & \frac{g}{s^2(s-2\upsilon)} & \frac{-g}{s^2(s-\omega)} \\ -\frac{g^2}{s^3}\left(\frac{\omega^2/\lambda}{(s-\omega)(s+\omega)}\right) & \frac{1}{s} & \frac{-g}{s(s-2\upsilon)} & \frac{g}{s(s-\omega)} \\ 0 & 0 & \frac{1}{s-2\upsilon} & 0 \\ -\frac{g}{s^2}\left(\frac{\omega^2/\lambda}{(s-\omega)(s+\omega)}\right) & 0 & 0 & \frac{1}{s-\omega} \end{bmatrix}$$

Let $s(t)$ of the above matrix be denoted symbolically:

$$\begin{bmatrix} a_{11} & a_{12} & a_{13} & a_{14} \\ a_{21} & a_{22} & a_{23} & a_{24} \\ 0 & 0 & a_{33} & 0 \\ a_{41} & 0 & 0 & a_{44} \end{bmatrix}$$

This matrix must now be inverted, since $s(t)$ requires $(\phi_{11} + \phi_{12}P)^{-1}$. This inverse is shown on the next page, where the $A_i$ and $B_i$ are defined as indicated:

$$A_1 = \frac{a_{22}a_{11} - a_{12}a_{21}}{a_{11}} \qquad A_2 = \frac{a_{23}a_{11} - a_{21}a_{13}}{a_{11}}$$

$$A_3 = \frac{a_{24}a_{11} - a_{21}a_{14}}{a_{11}} \qquad A_4 = -\frac{a_{41}}{a_{11}}$$

$$A_5 = -\frac{a_{41}a_{12}}{a_{11}} \qquad A_6 = -\frac{a_{41}a_{13}}{a_{11}}$$

$$A_7 = \frac{a_{44}a_{11} - a_{41}a_{14}}{a_{11}} \qquad A_8 = -\frac{a_{41}}{a_{11}}$$

$$B_1 = \frac{A_1A_7 - A_5A_3}{A_1} \qquad B_2 = \frac{A_1A_8 - A_5A_4}{A_1}$$

$$B_3 = -\frac{A_5}{A_1} \qquad B_4 = \frac{A_5A_2 - A_6A_1}{A_1a_{33}}$$

| | | | |
|---|---|---|---|
| $\dfrac{A_1B_1 - A_4B_1a_{12} + A_3B_2a_{12} - A_1a_{14}B_2}{a_{11}A_1B_1}$ | $\dfrac{-A_1B_3a_{14} - a_{12}B_1 + a_{12}A_3B_3}{a_{11}A_1B_1}$ | $\dfrac{a_{12}(B_1A_2 + a_{33}A_3B_4) - A_1B_1a_{13} - A_1B_4a_{33}a_{14}}{a_{11}a_{33}A_1B_1}$ | $\dfrac{a_{12}A_3 - a_{14}A_1}{a_{11}A_1B_1}$ |
| $\dfrac{A_4B_1 - A_3B_2}{A_1B_1}$ | $\dfrac{B_1 - A_3B_3}{A_1B_1}$ | $\dfrac{-B_1A_2 - a_{33}A_3B_4}{A_1B_1a_{33}}$ | $\dfrac{-A_3}{A_1B_1}$ |
| $0$ | $0$ | $\dfrac{1}{a_{33}}$ | $0$ |
| $\dfrac{B_2}{B_1}$ | $\dfrac{B_3}{B_1}$ | $\dfrac{B_4}{B_1}$ | $\dfrac{1}{B_1}$ |

The correctness of this inverse is extremely difficult to check by the methods previously used. However; it can be easily checked by assuming an arbitrary, nonsingular numerical form for $[\phi_{11} + \phi_{12}P]$ with zeroes in the appropriate positions. The inverse can then be computed via the general form of page 22 and then multiplied by the original matrix. If the unit matrix results, the generalized inverse can be assumed to be correct. The matrix

$$\begin{bmatrix} 1 & 2 & 1 & 1 \\ 2 & 3 & 1 & 1 \\ 0 & 0 & 1 & 0 \\ 1 & 0 & 0 & 2 \end{bmatrix}$$

is of the required form, and the inverse, as computed from the formula, is

$$\begin{bmatrix} -2 & \frac{4}{3} & \frac{2}{3} & \frac{1}{3} \\ 1 & -\frac{1}{3} & -\frac{2}{3} & -\frac{1}{3} \\ 0 & 0 & 3 & 0 \\ 1 & -\frac{2}{3} & -\frac{1}{3} & \frac{1}{3} \end{bmatrix}$$

which is readily observed to be correct.

For simplicity, $[\phi_{11} + \phi_{12}P]^{-1}$ will be denoted by

$$\begin{bmatrix} C_1 & C_2 & C_3 & C_4 \\ - & - & - & - \\ - & - & - & - \\ - & - & - & - \end{bmatrix}$$

since only the first row will be needed for $s(t)$. The latter thus becomes

$$s(t) = \begin{bmatrix} hC_1 & hC_2 & hC_3 & hC_4 \\ iC_1 & iC_2 & iC_3 & iC_4 \\ jC_1 & jC_2 & jC_3 & jC_4 \\ kC_1 & kC_2 & kC_3 & kC_4 \end{bmatrix}$$

and since

$$F(T - t) = R^{-1}B^* s(T - t) = \frac{1}{\lambda}[0 \quad 0 \quad 0 \quad \omega]s(T - t) \quad ,$$

it becomes

$$F(T - t) = \left[\frac{\omega kC_1}{\lambda} \quad \frac{\omega kC_2}{\lambda} \quad \frac{\omega kC_3}{\lambda} \quad \frac{\omega kC_4}{\lambda}\right]_{t = (T - t)}$$

The optimum controller $u_{opt}$ can now be computed from

$$u_{opt} = -F(T - t) \begin{bmatrix} x_1 \\ x_2 \\ x_3 \\ x_4 \end{bmatrix}$$

The remaining task consists of obtaining $F(T - t)$ in terms of the original system parameters. To this end, the gains $C_i$ in terms of the $a_{ij}$ are first computed:

$$C_1 = \frac{a_{22}a_{44}}{a_{44}(a_{11}a_{22} - a_{12}a_{21}) - a_{41}(a_{14}a_{22} - a_{12}a_{24})}$$

$$C_2 = \frac{-a_{12}a_{44}}{a_{44}(a_{11}a_{22} - a_{12}a_{21}) - a_{41}(a_{14}a_{22} - a_{12}a_{24})}$$

$$c_3 = \frac{a_{44}/a_{33}(a_{12}a_{23} - a_{22}a_{13})}{a_{44}(a_{11}a_{22} - a_{12}a_{21}) - a_{41}(a_{14}a_{22} - a_{12}a_{24})}$$

$$C_4 = \frac{a_{12}a_{24} - a_{22}a_{14}}{a_{44}(a_{11}a_{22} - a_{12}a_{21}) - a_{41}(a_{14}a_{22} - a_{12}a_{24})}$$

The vector $F(T - t)$ can now be restated as

$$F(T - t) = \frac{\omega k/\lambda}{a_{44}(a_{11}a_{22} - a_{12}a_{21}) - a_{41}(a_{14}a_{22} - a_{22}a_{24})}$$

$$\left[a_{22}a_{44} \quad -a_{12}a_{44} \quad \frac{a_{44}}{a_{33}}(a_{12}a_{23} - a_{22}a_{13}) \quad (a_{12}a_{24} - a_{22}a_{14})\right]$$

The values of the $a_{ij}$ and of k are next obtained by inverse transforming the appropriate elements:

$$a_{11} = \mathcal{L}^{-1}\left[\frac{s^3(s - \omega)(s + \omega) + \frac{g^2\omega^2}{\lambda}}{s^4(s - \omega)(s + \omega)}\right]$$

$$a_{11} = \left\{1 + \frac{g^2}{2\omega^3\lambda}\left[\frac{-\omega^3t^3}{3} - 2\omega t + e^{\omega t} - e^{-\omega t}\right]\right\}$$

$$a_{12} = \mathcal{L}^{-1}\left(-\frac{1}{s^2}\right) = -t$$

$$a_{13} = \mathcal{L}^{-1}\left[\frac{g}{s^2(s - 2\upsilon)}\right] = \frac{-g}{2\upsilon}\left[t + \frac{1 - e^{2\upsilon t}}{2\upsilon}\right]$$

$$a_{14} = \mathcal{L}^{-1}\left[\frac{g}{s^2(s - \omega)}\right] = \frac{g}{\omega}\left[t + \frac{1 - e^{\omega t}}{\omega}\right]$$

$$a_{21} = \mathcal{L}^{-1}\left[\frac{-g^2\omega^2}{\lambda}\left(\frac{1}{s^3(s - \omega)(s + \omega)}\right)\right]$$

$$a_{21} = \left[\frac{g^2t^2}{2\lambda} + \frac{g^2}{\omega^2\lambda} - \frac{g^2}{2\omega^2\lambda}e^{\omega t} - \frac{g^2}{2\omega^2\lambda}e^{-\omega t}\right]$$

$$a_{22} = \mathcal{L}^{-1}\left(\frac{1}{s}\right) = 1$$

$$a_{23} = \mathcal{L}^{-1}\left[\frac{-g}{s(s - 2\upsilon)}\right] = \frac{g}{2\upsilon}\left(1 - e^{2\upsilon t}\right)$$

$$a_{24} = \mathcal{L}^{-1}\left[\frac{g}{s(s - \omega)}\right] = \frac{-g}{\omega}\left(1 - e^{\omega t}\right)$$

$$a_{33} = \mathcal{L}^{-1}\left[\frac{1}{s - 2\upsilon}\right] = e^{2\upsilon t}$$

$$a_{41} = \mathcal{L}^{-1}\left[\frac{-g\omega^2/\lambda}{s^2(s - \omega)(s + \omega)}\right]$$

$$a_{41} = \frac{gt}{\lambda} - \frac{g}{2\omega\lambda} e^{\omega t} + \frac{g}{2\omega\lambda} e^{-\omega t}$$

$$a_{44} = \mathcal{L}^{-1}\left[\frac{1}{s - \omega}\right] = e^{\omega t}$$

$$k = \mathcal{L}^{-1}\left[\frac{-g}{s^2(s + \omega)}\right] = \frac{-g}{\omega}\left[t - \frac{1 - e^{-\omega t}}{\omega}\right]$$

Redefining $(T - t)$ as $t_{go}$ and inserting $t_{go}$ for $t$ in above expressions, we obtain

$$F\left(t_{go}\right) = \left(\frac{-6\omega^3 g t_{go}}{e^{\omega t_{go}}(I)} + \frac{6\omega^2 g\left(1 - e^{\omega t_{go}}\right)}{e^{\omega t_{go}}(I)}\right)[G_1 \quad G_2 \quad G_3 \quad G_4]$$

where

$$I = \left[6\omega^3\lambda + 2\omega^3 g^2 t_{go}^{\ 3} + 6\omega g^2 t_{go} - 6\omega^2 g^2 t_{go}^{\ 2} - 12\omega g^2 t_{go} e^{-\omega t_{go}} + 3g^2 - 3g^2 e^{-2\omega t_{go}}\right]$$

and

$$G_1 = e^{\omega t_{go}} \quad ; \qquad G_2 = t_{go} e^{\omega t_{go}}$$

$$G_3 = e^{\omega t_{go}}\left(\frac{g t_{go}}{2\upsilon} - \frac{g}{4\upsilon^2} + \frac{g}{4\upsilon^2} e^{-2\upsilon t_{go}}\right)$$

$$G_4 = e^{\omega t_{go}}\left(\frac{g}{\omega^2} - \frac{g t_{go}}{\omega} - \frac{g e^{-\omega t_{go}}}{\omega^2}\right)$$

The common $e^{\omega t_{go}}$ terms cancel. Additionally, if the expression is multiplied and divided by $gt_{go}^2$, the solution form becomes:

$$F\left(t_{go}\right) = -N'\left[\frac{1}{gt_{go}^2}, \frac{1}{gt_{go}}, \frac{1}{4\upsilon^2}\left(\frac{2\upsilon t_{go} e^{2\upsilon t_{go}} - e^{2\upsilon t_{go}} + 1}{e^{2\upsilon t_{go}} t_{go}^2}\right), \right.$$

$$\left. -\frac{1}{\omega^2}\left(\frac{\omega t_{go} e^{\omega t_{go}} - e^{\omega t_{go}} + 1}{e^{\omega t_{go}} t_{go}^2}\right)\right]$$

where

$$-N' = \frac{-6\omega^3 g^2 t_{go}^3 + 6\omega^2 g^2 t_{go}^2\left(1 - e^{-\omega t_{go}}\right)}{(I)}$$

and (I) is as previously defined.

The optimum controller $u_{opt}$ is computed from

$$u_{opt} = -F\left(t_{go}\right)\begin{bmatrix} x_1 \\ x_2 \\ x_3 \\ x_4 \end{bmatrix} = n_c \ .$$

Therefore, in terms of the original system parameters, the control vector becomes:

$$n_c = N'\left(\frac{y_d}{gt_{go}^2} + \frac{\dot{y}_d}{gt_{go}}\right) + \frac{N'}{4\upsilon^2}\left(\frac{2\upsilon t_{go} e^{2\upsilon t_{go}} - e^{2\upsilon t_{go}} + 1}{e^{2\upsilon t_{go}} t_{go}^2}\right) n_t$$

$$-\frac{N'}{\omega^2}\left(\frac{\omega t_{go} e^{\omega t_{go}} - e^{\omega t_{go}} + 1}{e^{\omega t_{go}} t_{go}^2}\right) n_\ell \ .$$

**Rearranging slightly yields**

$$n_c = \frac{N'}{g t_{go}}\left(\frac{y_d}{t_{go}} + \dot{y}_d\right) + \ldots \ ,$$

**but from the previous section, it was shown that:**

$$\left(\frac{y_d}{t_{go}} + \dot{y}_d\right) = V_c t_{go} \dot{\Lambda} \ ,$$

**and therefore $n_c$ becomes**

$$n_c = \frac{V_c N'}{g}\dot{\Lambda} + N'\left(\frac{2\upsilon t_{go} + e^{-2\upsilon t_{go}} - 1}{4\upsilon^2 t_{go}^2}\right) n_t$$

$$- N'\left(\frac{\omega t_{go} + e^{-\omega t_{go}} - 1}{\omega^2 t_{go}^2}\right) n_\ell \ .$$

The first three terms are identical to those previously obtained for the non-augmented case and represent biased proportional navigation. The last term is an additional bias term due to the autopilot lag, and it is interesting to note that it is identical in form to the target bias term. It should be noted that when the lag is removed (i.e., $\tau \rightarrow 0$ or $\omega \rightarrow \infty$), the last term drops out, since

$$\lim_{\omega \rightarrow \infty}\left(\frac{\omega t_{go} + e^{-\omega t_{go}} - 1}{\omega^2 t_{go}^2}\right) = 0 \ .$$

The nature of N', the navigation ratio bears further study. This quantity was defined on page 27. When divided by $2\omega^3$, it can be rewritten

$$N' = \frac{3g^2t_{go}^{\ 3} - \frac{3g^2t_{go}^{\ 2}}{\omega}\left(1 - e^{-\omega t_{go}}\right)}{3\lambda + g^2t_{go}^{\ 3} + \frac{3g^2t_{go}}{\omega^2} - \frac{6g^2t_{go}e^{-\omega t_{go}}}{\omega^2} - \frac{3g^2t_{go}^{\ 2}}{\omega} + \frac{3g^2}{2\omega^3} - \frac{3g^2e^{-2\omega t_{go}}}{2\omega^3}} .$$

If the autopilot lag is eliminated by letting $\omega \rightarrow \infty$ $(\tau \rightarrow 0)$, the above reduces to:

$$N' = \frac{3g^2t_{go}^{\ 3}}{3\lambda + g^2t_{go}^{\ 3}}$$

which is identical to the results previously obtained. Thus, the entire optimum controller reduces to the previously derived quantities when the lag term is eliminated. Where $\omega$ is finite, however, it seems to play a significant part in the value of N'. In order to observe the behavior of N' as a function of time and $\omega$, let $\lambda = 0$, i.e., remove the constraint on control effort. If this is done, the $g^2$ terms drop out, and N' becomes

$$N' = \frac{3t_{go}^{\ 3} - \frac{3t_{go}^{\ 2}}{\omega}\left(1 - e^{-\omega t_{go}}\right)}{t_{go}^{\ 3} + \frac{3t_{go}}{\omega^2} - \frac{6t_{go}e^{-\omega t_{go}}}{\omega^2} - \frac{3t_{go}}{\omega} + \frac{3}{2\omega^3} - \frac{3e^{-2\omega t_{go}}}{2\omega^3}} .$$

For very large values of $t_{go}$, the above converges to

$$N' = \frac{3t_{go}^{\ 3}}{t_{go}^{\ 3}} = 3 .$$

For typical values of $t_{go}$, the above equation was programmed with several values of $\omega$ used as a parameter. The resulting plots of N' versus $t_{go}$ are shown in Figure 6, from which one concludes that for significant autopilot time constants, N' deviates considerably from the limit value of 3, and is also nonstationary.

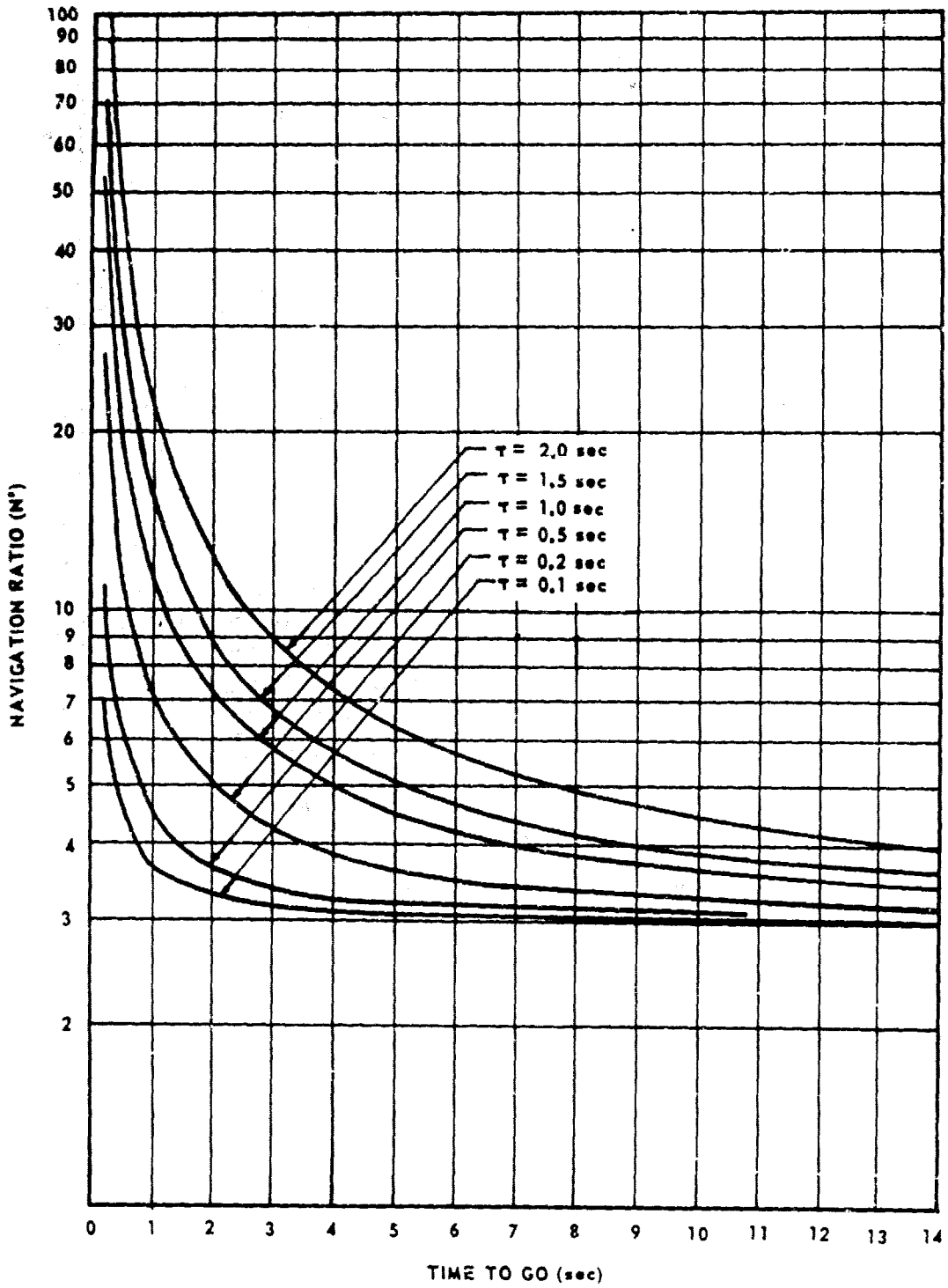


FIGURE 6. PLOTS OF NAVIGATION RATIO VERSUS TIME TO GO

## Section V. CONCLUSIONS

It has been shown herein that the Ogata solution of the minimum error regulator problem can be used to solve the homing problem. This was done by independently solving a previously solved problem and obtaining identical results. The subject method of solution is (at least in principle) straightforward. For high order systems, the computational aspects become menacing, but could be handled by use of the digital computer.

The effect of autopilot lag was also studied using the subject method, and several significant conclusions can be reached:

1) The navigation gain is a nonstationary function that varies significantly with the autopilot lag.

2) The optimum controller requires an additional bias term appended to the conventional biased proportional navigation vector. This term is identical in form to that resulting from target acceleration.

3) The added term requires that the actual missile acceleration be measured, since this is a required state. However, in cases where this state is not explicitly measured, the commanded acceleration could be passed through a synthetic time constant. The latter would be tailored to match autopilot response, and thus an approximate measure of $n_\ell$ could be obtained.

UNCLASSIFIED

Security Classification

**DOCUMENT CONTROL DATA - R & D**

*(Security classification of title, body of abstract and indexing annotation must be entered when the overall report is classified)*

| | |
|---|---|
| 1. ORIGINATING ACTIVITY (Corporate author)<br>Advanced Sensors Laboratory<br>Research and Development Directorate<br>U. S. Army Missile Command<br>Redstone Arsenal, Alabama 35809 | 2a. REPORT SECURITY CLASSIFICATION<br>Unclassified<br>2b. GROUP<br>N/A |

3. REPORT TITLE

OPTIMAL CONTROLLERS FOR HOMING MISSILES

4. DESCRIPTIVE NOTES (Type of report and inclusive dates)

None

5. AUTHOR(S) (First name, middle initial, last name)

G. Willems

| | | |
|---|---|---|
| 6. REPORT DATE<br>11 September 1968 | 7a. TOTAL NO. OF PAGES<br>37 | 7b. NO. OF REFS<br>0 |
| 8a. CONTRACT OR GRANT NO.<br>b. PROJECT NO (DA) 1X263302D212<br>AMC Management Structure Code No.<br>c. 5231.12.171<br>d. | 9a. ORIGINATOR'S REPORT NUMBER(S)<br>RE-TR-68-15<br>9b. OTHER REPORT NO(S) (Any other numbers that may be assigned this report)<br>AD _____ | |

10. DISTRIBUTION STATEMENT

This document is subject to special export controls and each transmittal to foreign governments or foreign nationals may be made only with prior approval of this Command, ATTN: AMSMI-RE.

| | |
|---|---|
| 11. SUPPLEMENTARY NOTES<br>None | 12. SPONSORING MILITARY ACTIVITY<br>Same as No. 1 |

13. ABSTRACT

Optimum control theory is applied to develop a guidance law for homing missiles. An existing, closed form, general solution of the "minimum error regulator" problem is applied to a previously solved problem which uses a very simple plant model, in order to verify its applicability. The solution method is then applied to a system that includes autopilot lag, and in this case the optimum law is shown to differ from proportional navigation.

DD FORM 1 NOV 65 1473 REPLACES DD FORM 1473, 1 JAN 64, WHICH IS OBSOLETE FOR ARMY USE.

UNCLASSIFIED

Security Classification

| 14. KEY WORDS | LINK A ROLE | LINK A WT | LINK B ROLE | LINK B WT | LINK C ROLE | LINK C WT |
|---|---|---|---|---|---|---|
| Guidance | | | | | | |
| Control | | | | | | |
| Optimum control | | | | | | |
| Proportional navigation | | | | | | |
| Homing missiles | | | | | | |