UNCLASSIFIED

AD NUMBER

AD833180

NEW LIMITATION CHANGE

TO

Approved for public release, distribution unlimited

FROM

Distribution authorized to U.S. Gov't. agencies and their contractors; Administrative/Operational Use; 17 SEP 1959. Other requests shall be referred to Space and Missile Systems Organization, Los Angeles, CA.

AUTHORITY

SAMSO USAF ltr, 28 Feb 1972

THIS PAGE IS UNCLASSIFIED

REPORT NO 7A2248

DATE 17 Sept 1959

NO. OF PAGES 41

CONVAIR ASTRONAUTICS

CONVAIR DIVISION OF GENERAL DYNAMICS CORPORATION

AD833180

REPORT NO. 7A2248

~~ASTRONAUTICS~~

PRE-PRODUCTION TEST REPORT

FOR

D/AIG ELECTRONIC PROGRAMMER

DWG. NO. 27-41001

This document is subject to special export controls and each transmittal to foreign governments or foreign nat. [illegible] only with prior approval of: Hq. SAMSO, [illegible] Cal 90045 Attn: [illegible]

16085

PREPARED BY H. L. Gusa
H. L. Gusa
Test Engineer

CHECKED BY E. C. Byrne
E. C. Byrne
Lead Engineer

CHECKED BY H. W. Pavela
H. W. Pavela
Qualification Coordinator

APPROVED BY R. G. Camp, Jr.
R. G. Camp, Jr.
Test Lab Group Engineer

APPROVED BY H. S. Campbell
H. S. Campbell
Chief of Test Labs

WITNESSED BY Ivan T. Hamblin
CVAC INSP 9/29/59

WITNESSED BY J. M. Luna
USAF INSP

REVISIONS

NO.	DATE	BY	CHANGE	PAGES AFFECTED

Best
Available
Copy

SUMMARY

The data presented in this report represents the results of flight proofing tests performed on a D/AIG Electronic Programmer S/N 3 (prototype), according to the paragraphs of the test procedure applicable to a flight proofing test. (Para 4.2, 4.9, and 4.10)

The only out - of - tolerance reading observed during the flight proofing test was on the roll set voltage. The test procedure states the maximum in-phase or out-of-phase voltage shall be 8.0±0 volts. The attached AVO from G. Stringfellow to G. Conrey points out the upper limit of the roll set voltage is arbitrary and will be changed in report AZM-27-200 to 7.5 +2.5 volts.
-0

(Please see AVO attached to back cover)

1.0 GENERAL INFORMATION:

1.1 PURPOSE - The purpose of this report is to describe the test equipment and procedure required for the Pre-Production Testing of components in accordance with the individual component specification and the latest issue of Convair Specification No. 7-00209.

1.2 ENVIRONMENTAL TESTS - The environmental tests prescribed in this procedure are written to conform to the individual component specification and the current issue of Convair Specification No. 7-00209. In the event of conflict between specifications, the component specification shall take precedence.

1.3 NOMENCLATURE - The specific component under test shall be referred to as "Test Specimen" in this procedure.

1.4 TEST DATA - One copy of this report shall be bound into a data book and all original data and operating time, in minutes, recorded therein. The data book shall be kept on file in the Components Test Laboratory.

1.5 WITNESSING - Data from all tests outlined in this procedure shall be witnessed and signed by an Air Force representative or his designated alternate.

1.6 SEQUENCE OF TESTS - The Initial Satisfactory Performance Test shall be performed on the Test Specimen prior to all other tests. The sequence of subsequent tests shall be determined by the availability of environmental facilities.

1.7 VARIATIONS - Variations to Convair Specification No. 7-00209 and/or the individual component specification shall be issued in the form of a memorandum to the applicable portions of this procedure.

Deviations to the above specifications shall be processed by the Design Engineering Group based on the variations, if any, outlined in this procedure.

2.0 DESCRIPTION AND REQUIREMENTS:

2.1 DESCRIPTION OF TEST SPECIMEN - The test specimen covered by this procedure consists of an electronic flight programmer, D/AIG series Dwg. #27-41001.

2.2 REFERENCES - Applicable portions of the following publications shall form part of this procedure:

a) Convair Spec. No. 7-00209B, "Environmental Design Conditions and Environmental Test Procedures for WS-107A-1 Equipments".

b) Convair Spec. No. 27-04325 D/AIG Autopilot Subsystem Specification.

c) Convair Spec. No. AZM 27-200, Test parameters, D/AIG missile.

2.3 OPERATING REQUIREMENTS AND TOLERANCES -

2.3.1 Input Power Requirements:

a) The test specimen shall be supplied with 3 phase 115 volt ± 2%, 400 cycle ±0.5% voltage at the proper input terminals.

b) The test specimen shall be supplied with a 28 volt ±2 volt direct current source at the proper input terminals.

2.3.2 Control Requirements:

a) Supply the test specimen with the proper voltages and loads as shown in Dwg. No. 27-41111.

2.0 DESCRIPTION AND REQUIREMENTS: Continued

2.3.3 Output Requirements and Tolerances:

a) Supply switches #1 - #19 with the loads listed in the following table. The outputs of the various switches are required to change state as indicated in the table.

Switch No.	Load	State	Time Reference	Time	Voltage Tolerance
1	+4 MA at +12.5V -12 MA at -8.0V	High to Lo	Stage	+100 ±50 MSEC	Lo = -8.0 ±3.0 volts Hi = +22.5 ±2.5 volts
2	>0.5 MEGOHM at +12.5V -4 MA at 8.0V	Lo to High High to Lo Lo to High	Stage Stage Stage	+100 ±50 MSEC +3.0 Sec. ±25 MSEC +3.7 Sec. ±50 -0 MSEC	
3	>0.5 MEGOHM at +12.5V -8 MA at -8.0 V	Lo to High High to Lo Lo to High	Stage Stage Sus c/o	+100 ±50 MSEC +6.7 Sec ±50 MSEC 0 +100 -0 MSEC	
4	>0.5 MEGOHM at +12.5V -4 MA at -8.0 V	Lo to High	Stage	+6.7 Sec ±50 MSEC	
5	+4 MA at +12.5V -4 MA at -8.0V	Lo to High High to Lo Lo to High	Stage Stage Sus c/o	+100 ±50 MSEC +10 Sec. ±1.0 Sec. 0 +100 -0 MSEC	
6	+4 MA at +12.5V -4 MA at -8.0 V	Lo to High	Stage	+100 ±50 MSEC	
7	+4 MA at +12.5V ≥0.5 MEGOHM at -8.0V	High to Lo	Stage	5.0 Sec ±100 MSEC	
9	+2 MA at +12.5V ≥0.1 MEGOHM at -8.0 V	Lo to High High to Lo	Launch Launch	15 Sec ±50 MSEC 19 Sec ±50 MSEC	
10	+2 MA at +12.5V ≥0.1 MEGOHM at -8.0 V	Lo to High High to Lo	Launch Launch	2 Sec ±50 MSEC 15 Sec ±50 MSEC	
11	800 - 3570 OHMS	Lo to High High to Lo	Launch Launch	2 Sec ±50 MSEC 19 Sec +100 -50 MSEC	18 ±0.9 RMS 9 ±0.45 RMS
12	27 OHMS	Lo to High	Stage	100 ±50 MSEC	Lo = 0 volts Hi = Supply voltage (+27V) +0 -4 volts
13	27 OHMS	Lo to High	Stage	3.1 Sec +25 -0 MSEC	
14	27 OHMS	Lo to High	Stage	54 Sec ±3 Sec	
16	27 OHMS	Lo to High	Ver c/o	3.0 Sec ±100 MSEC	
17	27 OHMS	Lo to High	Ver c/o	4.0 Sec ±100 MSEC	
18	27 OHMS	Lo to High	Ver c/o	5.0 Sec ±100 MSEC	
19	27 OHMS	Lo to High	Sus c/o	0 +50 -0 MSEC	

2.0 DESCRIPTION AND REQUIREMENTS-

2.3.3 Output Requirements and Tolerances - Continued

b) Terminals (J) and (A) of plug U3J3 shall provide a maximum in-phase or out of phase A.C. voltage of $8.0 \begin{smallmatrix}+1.0\\-0\end{smallmatrix}$ volts, when this circuitry is activated by the roll set input voltage of proper polarity. The time required to go from one maximum to the other shall be 70 ±20 seconds.

c) Terminals (L) and (F) plug U3J2 shall provide a 400 cps voltage whose magnitude varies with elapsed time from launch command in the manner described below. The voltage tolerance is ±0.125 volts and the timing tolerance is ±100MSEC.

TIME (SEC)	VOLTAGE (VOLTS)
0	0.2 (maximum)
15	2.2
27	1.7
39	1.9
54	1.8
64	1.6
74	1.3
89	1.0
105	0.7
120	0.6
Stg +C.1	0.0

d) The arm - safe switch shall provide a change of state from arm to safe or from safe to arm in 10 ± 5 seconds.

e) The test specimen shall respond with the launch sequence of events as described in paragraph 2.3 upon the opening of the circuit between terminals (X) and (A) of U3J3.

f) The test specimen shall respond with the stage sequence of events as described in paragraph 2.3 upon the application of +28 volts to terminal (c) of U3J3.

g) The test specimen shall respond with the sustainer cut off sequence of events as described in paragraph 2.3 upon the application of +28 volts to terminal (d) of U3J3.

h) The test specimen shall respond with the vernier cut off sequence of events as described in paragraph 2.3 upon the application of +28 volts to terminal (p) of U3J3.

3.0 TEST FACILITIES AND EQUIPMENT:

3.1 INITIAL SATISFACTORY PERFORMANCE TEST EQUIPMENT -

3.1.1 This equipment is the same as that required for the operating cycle.

3.2 OPERATING CYCLE TEST EQUIPMENT -

3.2.1 The operating cycle test equipment is test lab furnished and consists of equipment described in drawing number 7A2182-D. In addition to this equipment, the following items of standard Convair Equipment are used:

a) Sanborn Recorder, 8 channel with 3 servo monitor pre-amplifiers, and 5 D.C. pre-amplifiers.

b) Components Test Lab furnished 400 cycle power supply, 115-200 volt, 3 phase, 300 VA.

c) Esterline-Angus Event Recorder, 40 channel, 28 volt, with external drive.

d) Vacuum tube volt meter, HP model 410B.

e) Power supply, 28 volt, 10 amp, Sorensen and Co., model E-28-10.

f) Equivalent or additional equipment may be used if necessary.

3.0 TEST FACILITIES AND EQUIPMENT: (Continued)

3.3 ENVIRONMENTAL EQUIPMENT -

3.3.1 TEMPERATURE - ALTITUDE - HUMIDITY EQUIPMENT -

a) Benco Model WFA-100-45 environmental chamber with associated controls, or equivalent.

3.3.2 VIBRATION EQUIPMENT -

a) MB Model 225-S vibration exciter with associated controls, or equivalent.

3.3.3 ACCELERATION TEST EQUIPMENT -

a) Genisco Rotary Accelerator Model C159, with associated controls, or equivalent.

3.3.4 Salt Atmosphere Test Equipment -

a) Industrial Filter and Pump Company, Salt Atmosphere chamber, type Cal-1 and associated controls, or equivalent.

3.3.5 Sand and Dust Test Equipment -

a) Hicatt Engineering Company, Sand and Dust chamber, Model SCHL-12 and associated controls, or equivalent.

4.0 TEST PROCEDURES:

4.1 TEST CONDITIONS -

4.1.1 ATMOSPHERIC CONDITIONS - Unless otherwise specified herein or in the test specimen specification, all tests shall be performed at an atmospheric pressure between 28 inches and 32 inches of mercury, a temperature between +60°F and 95°F, and a relative humidity of not more than 90%. Data from tests performed at other than the atmospheric conditions specified shall include corrections for instrument compensation.

4.1.2 TOLERANCES - The maximum allowable tolerances on test conditions shall be as follows:

a)	Temperature	±4°F
b)	Barometric Pressure	±5%
c)	Relative Humidity	±10%
d)	Vibration Amplitude	±10%
e)	Vibration Frequency	±2%
f)	Acceleration	±10%
g)	Shock	±10%

4.1.3 MEASUREMENTS - All measurements shall be made with instruments whose accuracies have been certified by the Astronautics Standards Laboratory and which bear a current calibration decal.

4.1.4 TEST SPECIMEN OPERATION - Operational and functional tests of the test specimen shall be conducted as outlined in this procedure.

4.1.5 ADJUSTMENTS AND REPAIRS DURING TESTS - No adjustment, maintenance, or repairs of the test specimen, other than those specifically stated in this procedure, shall be allowed after the start of the Initial Satisfactory Performance Tests. Exceptions to this shall be made when in the opinion of the Components Test Lab and designated witnesses, adjustments, repairs, or maintenance are not due to faults in design, workmanship, materials, or to the test conditions imposed.

4.1.6 TEMPERATURE STABILIZATION - Temperature stabilization has been reached when the temperature of the largest centrally located mass of the test specimen does not vary more than 5°F from the temperature ambient to the equipment.

4.0 TEST PROCEDURES: (Continued)

4.1.7 PRELIMINARY INSPECTION - The test specimen shall be examined visually prior to any other test to determine that the specimen meets the requirements of workmanship, identification markings, external dimensions, finish, cleanliness, and proper inspection approval.

4.1.8 INITIAL SATISFACTORY PERFORMANCE TESTS - The following tests shall constitute the Initial Satisfactory Performance Test for the test specimen:

a) The Initial Satisfactory Performance Test is identical with the operating cycle test as outlined in paragraph 4.1.9, except as in b) through c) below.

b) Terminals J and A of U3J3 shall be monitored while the roll set switching circuitry is actuated. The output voltage as measured at these terminals shall vary from a maximum inphase voltage of $8.0\ ^{+1.0}_{-0}$ volts to a maximum out of phase voltage of $8.0\ ^{+1.0}_{-0}$ volts in an operating time of 70 ±20 seconds.

c) The arm-safe switch in the test specimen shall be operated by actuating the external arm-safe circuitry. Sucessful operation as indicated by the arm-safe indicator lights shall occur in 10 ±5 seconds.

4.1.9 OPERATING CYCLE TEST - The following tests shall constitute the Operating Cycle, the results of which shall form the basis for indicating satisfactory performance of the test specimen under applicable environmental tests.

a) The test specimen shall be connected to the test equipment as shown in Figure 1.

b) Apply the proper input voltages to the test specimen as outlined in paragraph 2.3.

c) Launch Command shall be sent to the test specimen at zero (reference) seconds.

d) Staging command shall be sent to the test specimen at approximately +140 seconds.

e) Sustainer cut off command shall be sent to the test specimen at approximately +210 seconds.

4.0 TEST PROCEDURES: (Continued)

4.1.9 OPERATING CYCLE TEST: (Continued)

f) Vernier cut off command shall be sent to the test specimen at approximately +215 seconds.

g) During the operations described in steps (c) through (F) all outputs described in paragraph 2.3 shall be monitored for indication of proper operation. A record shall be made of these outputs which will be examined to determine compliance with paragraph 2.3.

4.0 TEST PROCEDURES: (Continued)

4.1.9.1 OPERATING CYCLE A - To be performed after tests specified in Paragraph - Not applicable.

4.1.9.2 OPERATING CYCLE B - To be performed after tests specified in Paragraph - Not applicable.

4.0 TEST PROCEDURES: (Continued)

4.2 TEMPERATURE - ALTITUDE - HUMIDITY TESTS -

4.2.1 MISSILEBORNE EQUIPMENT - Missileborne equipment shall be subjected to the following test sequence, as applicable.

4.2.1.1 MISSILEBORNE EQUIPMENT OTHER THAN POD-MOUNTED CANISTERS - Not applicable.

4.2.1.2 MISSILEBORNE POD-MOUNTED CANISTERS - The following test sequence shall be conducted in a Temperature - Altitude - Humidity Test Chamber in the order specified. A thermocouple shall be placed in good, thermal contact on the largest centrally located internal mass within the test specimen, or in any other location necessary to check temperature stabilization.

a) Place test specimen in chamber and supply with sufficient cooling air to maintain the test specimen skin temperature at plus 40°F.

Perform tests as specified in applicable Paragraph of 4.1.9 and record data.

b) Stabilize test specimen temperature at plus 125°F for a period of one hour.

Maintain chamber temperature and subject test specimen to radiant heat at the rate of 360 BTU/sq.ft./hr. upon its largest surface area for a period of 4 hours.

Determine the maximum test specimen temperature during this test for use in following tests requiring a "maximum non-operating temperature".

c) Reduce chamber temperature to minus 65°F at a rate of 0.75 to 1.25°F per minute, and maintain at this temperature for a period of 8 hours or until the test specimen stabilizes, whichever is longer.

During or at the end of the above period, reduce the chamber absolute internal pressure to 3.44 inches of mercury for a period of 1 hour.

Return chamber to approximately 30 inches of mercury. Allow chamber to return to ambient temperature and the test specimen temperature to stabilize.

4.0 TEST PROCEDURES: (Continued)

4.2.1.2 MISSILEBORNE POD-MOUNTED CANISTERS - (Continued)

c) (Continued)

With sufficient cooling or heating air to maintain the test specimen skin temperature between 40°F and 80°F, perform tests as specified in applicable Paragraph of 4.1.9 and record all data.

d) Increase chamber temperature at a rate of 0.75 to 1.25°F per minute to maximum non-operating temperature, or 160°F, whichever is greater, and maintain at a relative humidity of not less than 95% for a period of 4 hours, or until the test specimen temperature stabilizes, whichever is longer.

Remove excessive moisture and condensate from chamber prior to performing the following altitude tests.

Reduce the chamber internal absolute pressure to 3.44 inches of mercury (relative humidity may be decreased) for a period of 1 hour, and then return the chamber pressure to approximately 30 inches of mercury and a relative humidity of not less than 95 percent.

Allow the chamber to return to ambient temperature and the test specimen temperature to stabilize.

Operate test specimen while supplying sufficient heating or cooling air to maintain the test specimen skin temperature at 80°F.

Perform tests as specified in applicable Paragraph of 4.1.9 and record data.

Remove excessive moisture and condensate from chamber prior to performing the following altitude tests.

Immediately after the above functional test, shut off the cooling or heating air to the test specimen, and operate the test specimen while the chamber internal absolute pressure is reduced to not more than 1 mm of mercury as rapidly as possible, but not to exceed 10 minutes (no humidity control), and record all data required for the test specified in the applicable Paragraph of 4.1.9.

4.2.2 TEST GROUND SUPPORT EQUIPMENT - Not applicable.

4.0 TEST PROCEDURES: (Continued)

4.2 TEMPERATURE - ALTITUDE - HUMIDITY TESTS -

4.2.1 MISSILEBORNE EQUIPMENT - Not applicable.

4.2.2 TEST GROUND SUPPORT EQUIPMENT - Not applicable.

4.3. SALT ATMOSPHERE TEST - The test specimen shall be mounted in the test chamber.

Increase the temperature of the test chamber to 95°F ±3°F and maintain at this temperature.

Compressed air shall be bubbled through a salt solution causing a saline vapor to permeate the chamber. Sodium chloride of C.P. quality shall be used. The concentration of salt shall be 2.35 per cent by weight, with a hydrogen ion concentration of pH 6.8 to 7.2.

Duration of the Salt Atmosphere Test shall be at least 100 hours.

At the completion of the test period, the specimen shall be operated according to the test specified in the applicable paragraph of 4.1.9 and a record shall be made of all data.

4.4 FUNGUS RESISTANCE TEST - Fungus resistance tests shall be performed according to the following procedure:

4.4.1 PROCEDURE - Not applicable

4.4.1.1 ORGANISMS-

Group I	Chaetomium globosum USDA 1042.4 Myrothecium verrucaria USDA 1334.2.
Group II	Rhizopus nigricans S.N. 32 or Aspergillus niger USDA Tc215-4247.
Group III	Aspergillus flavus WADC No. 26 or Aspergillus terreus PQMD 82J.
Group IV	Penicillium luteum USDA 1336.1, Penicillium sp USDA 1336.2 or Penicillium citrinum ATCC 9849.
Group V	Memnoniella echinata WADC No. 37 or Fusarium moniliforme USDA 1004.1.

4.0 **TEST PROCEDURES:** (Continued

4.5 RAIN TEST - The rain test shall be performed according to the following procedure:

4.5.1 PROCEDURE - Not applicable.

4.0 TEST PROCEDURES: (Continued)

4.6 SAND AND DUST TEST - The sand and dust test shall be performed according to the following procedure:

4.6.1 PROCEDURE - The test specimen shall be placed within the test chamber equal to that described in specification MIL-C-9436 and the sand and dust density raised and maintained at 0.1 to 0.5 grams per cubic foot within the test space. The relative humidity shall not exceed 30 percent at any time during the test. Sand and dust used in the test shall be of angular structure and shall have characteristics as follows:

a) 100 percent of the sand and dust shall pass through a 100 mesh screen, U.S. Standard Sieve Series.

b) 98 ±2 percent of the sand and dust shall pass through a 140 mesh screen, U.S. Standard Sieve Series.

c) 90 ±2 percent of the sand and dust shall pass through a 200 mesh screen, U.S. Standard Sieve Series.

d) 75 ±2 percent of the sand and dust shall pass through a 325 mesh screen, U.S. Standard Sieve Series.

e) Chemical analysis of the dust shall be as follows:

SUBSTANCE	PERCENT BY WEIGHT
SiO_2	97 to 99
Fe_2O_3	0 to 2
Al_2O_3	0 to 1
TiO_2	0 to 2
MgO	0 to 1
Ign Losses	0 to 2

The internal temperature of the test chamber shall be maintained at 25°C (77°F) for a period of 6 hours, with sand and dust velocity through the test chamber between 100 to 500 feet per minute (2300 ±500 feet per minute if specified in the detail specification). After 6 hours at above conditions, the temperature shall be raised to and maintained at 71°C (160°F). These conditions shall be maintained for 6 hours. At the end of this test period, the equipment shall be removed and allowed to cool to room temperature and shall be operated and a record made of all data necessary to determine compliance with the test specified in applicable paragraphs of 4.1.9.

4.0 TEST CONDITIONS: (Continued)

4.7 EXPLOSION PROOF TESTS - Not applicable.

4.7.1 PROCEDURE - Not applicable.

4.7.1.1 FACILITY - Not applicable.

4.7.1.2 OPERATING CONDITIONS - Not applicable.

4.0 TEST PROCEDURES: (Continued)

4.7.1.2 OPERATING CONDITIONS - Not applicable.

4.8 NON-OPERATING SHOCK AND VIBRATION TESTS - Test specimens shall be subjected to the following shock and sinusoidal vibration tests as specified in the particular component specification, except where the test specimen size and weight make it impractical to do so.

4.8.1 SHOCK TESTS - Immediately following each of the following test procedures, the test specimen shall be operated and a record made of all data necessary to determine compliance with the applicable paragraph of 4.1.9.

4.0 TEST PROCEDURES: (Continued)

4.8.1.1 PROCEDURE I - The test specimen, when not packaged for shipment, shall be subjected to a shock whose shock spectrum in both plus and minus directions is at least 100 G for each frequency from 100 to 700 cps. The shock shall be applied at least one along each of three mutually perpendicular axes. If the test specimen is vibration mounted on the missile, the shocks shall be applied with the vibration mounting removed.

4.8.1.2 PROCEDURE II - The test specimen, packaged for shipment, shall be dropped to a flat concrete surface once in each direction along each of the three major mutually perpendicular axes except that the test specimen of over 1000 lbs. weight shall be dropped only in its normal mounting and transportation position. Height of drop shall depend on weight, as follows:

0 - 20 lbs.	42 inches
21 - 50 lbs.	36 inches
51 - 250 lbs.	30 inches
250 - 500 lbs.	24 inches
Over 500 lbs.	12 inches

4.8.2 VIBRATION TESTS -

4.8.2.1 PROCEDURE - Whenever a storage and shipment case is provided, it shall be included in the test setup. The test specimen shall be fastened securely on a suitable vibration machine in a position dynamically similar to the most severe position likely to be employed during shipment. Vibration tests shall be conducted under both resonant and cycling conditions as directed in Paragraphs 4.8.2.2 and 4.8.2.3. When practicable, the test specimen shall be tested functionally prior to and immediately following this test. At the end of the test period, the test specimen shall be inspected thoroughly for damage or defects resulting from the vibration test. The applied test conditions shall be as follows:

Frequency	Double Amplitude or Vibratory Acceleration
5 cps to 27.5 cps	±1.3 G
27.5 cps to 52 cps	0.036 inch
52 cps to 500 cps	±5 G

When the test specimen incorporates cushioning materials likely to be appreciable influenced by extreme temperature conditions

4.0 TEST CONDITIONS: (Continued)

4.8.2.1 PROCEDURE - (Continued)

(-65°F to +160°F) vibration temperature tests shall be conducted. The vibration test periods shall be equally divided into 3 periods - one period for each of the following temperature range; high, low, and room ambient temperature.

4.8.2.2 RESONANCE - Resonant frequencies of the test specimen shall be determined by varying the frequency of applied vibration slowly through the 5 to 500 cps frequency range at double amplitudes or accelerations not exceeding those given above. This procedure shall be followed successively for vibration applied along each of three mutually perpendicular axes of the test specimen. Whenever practicable, covers shall be removed from the test specimen so that resonance may be determined. The specimen shall be vibrated for thirty minutes at each resonant mode encountered. This shall apply, in turn, for vibration applied along each of the three axes. When resonant frequencies within the specified frequency range are not apparent, the specimen shall be vibrated for one hour along each axis under the cycling conditions given below.

4.8.2.3 CYCLING - A frequency cycling test also shall be conducted in which the test frequency shall vary linearly from 10 cps to 500 cps and return to 10 cps in a 15 minute interval. Between 10 cps and 52 cps, the double amplitude applied shall be 0.036 inch and from 52 cps to 500 cps, the vibratory acceleration shall be ±5 G. The test specimen shall be subjected to 3 cycling variations (45 minutes) along each axis of vibration.

4.0 TEST PROCEDURES: (Continued)

4.9 OPERATING VIBRATION TESTS - Missileborne equipment shall be subjected to the following test while operating. A record shall be made of all data necessary to determine compliance with the tests outlined in the applicable paragraph of 4.1.9.

4.9.1 PROCEDURE - The test specimen shall be subjected to a slow speed scanning sweep, at frequencies and amplitudes of sinusoidal vibration as shown in Figure 1, 2, or 3, as applicable, and a sweep period as shown in Figure 4, along each of any three mutually perpendicular axes of the test specimen. The resonant frequencies for each axis shall be determined by the following methods:

a) Increased accelerations measured on the test specimen with constant input accelerations, measured at the tert specimen mounting points.

b) Excessive noise emitted from the equipment.

c) Erratic operation, or failure of the equipment.

4.10 OPERATING ACCELERATION TESTS - Missileborne equipment shall be subjected to the following tests while operating. A record shall be made of all data necessary to determine compliance with the tests outlined in the applicable paragraph of 4.1.9.

Step 1 - The equipment shall be subjected to 10 ±1 G for a period of at least 30 seconds along the axis corresponding to the air vehicle longitudinal axis, forward.

Step 2 - The equipment shall be subjected to 2 G $^{+10}_{-0}$ percent, for a period of at least 15 seconds, along the axis corresponding to the air vehicle longitudinal axis, in a reverse direction.

Step 3 - The equipment shall be subjected to 3 G $^{+10}_{-0}$ percent along each of two axes mutually perpendicular to each other and to the axis corresponding to the air vehicle longitudinal axis, for a period of at least 15 seconds in each direction;

4.0 TEST PROCEDURES: (Continued)

4.11 TEMPERATURE SHOCK TEST - The test specimen shall be subjected to the following temperature shock test:

4.11.1 PROCEDURE - The test specimen shall be placed within the chamber and the chamber maintained at a temperature of 70°F ±5°F for a period of at least one hour, or until the test specimen temperature stabilizes. The test specimen shall then, within a period of 2 minutes, be placed in a chamber whose temperature is at maximum non-operating temperature, or 160°F, whichever is greater, and maintained at this temperature for a period of one hour, or until the test specimen temperature stabilizes, whichever is longer. The test specimen shall then, within a period of 2 minutes, be placed in a chamber whose temperature is minus 65°F, and maintained at this temperature until the test specimen temperature stabilizes. The test specimen shall then be returned to room ambient conditions and examined for evidence of deterioration, and operated and a record made of all data necessary to determine compliance with the tests outlined in the applicable paragraph of 4.1.9.

4.12 SUNSHINE TEST - The sunshine test shall be substituted for Step b of Paragraphs 4.2.1.1, 4.2.1.2, and 4.2.2 of this specification and shall be performed only as required in the test specimen procurement specification.

4.12.1 PROCEDURE - **Not applicable.**

Best Available Copy

4.0 TEST PROCEDURES: (Continued)

4.13 RADIO INTERFERENCE TESTS - Not applicable.

4.14 LIFE TESTS-

The test specimen shall be subjected to the following Life Test. The test specimen shall operate for a total time of 300 hours. This shall consist of 3600 complete operating sequences of approximately 5 minutes per cycle. A proof cycle shall be performed at least once every 50 hours. The test specimen shall operate for the last 100 hours with no malfunction. In the event that a malfunction occurs during this period of 100 hours, the test specimen shall be operated for an additional 100 hour period with no malfunction occurring.

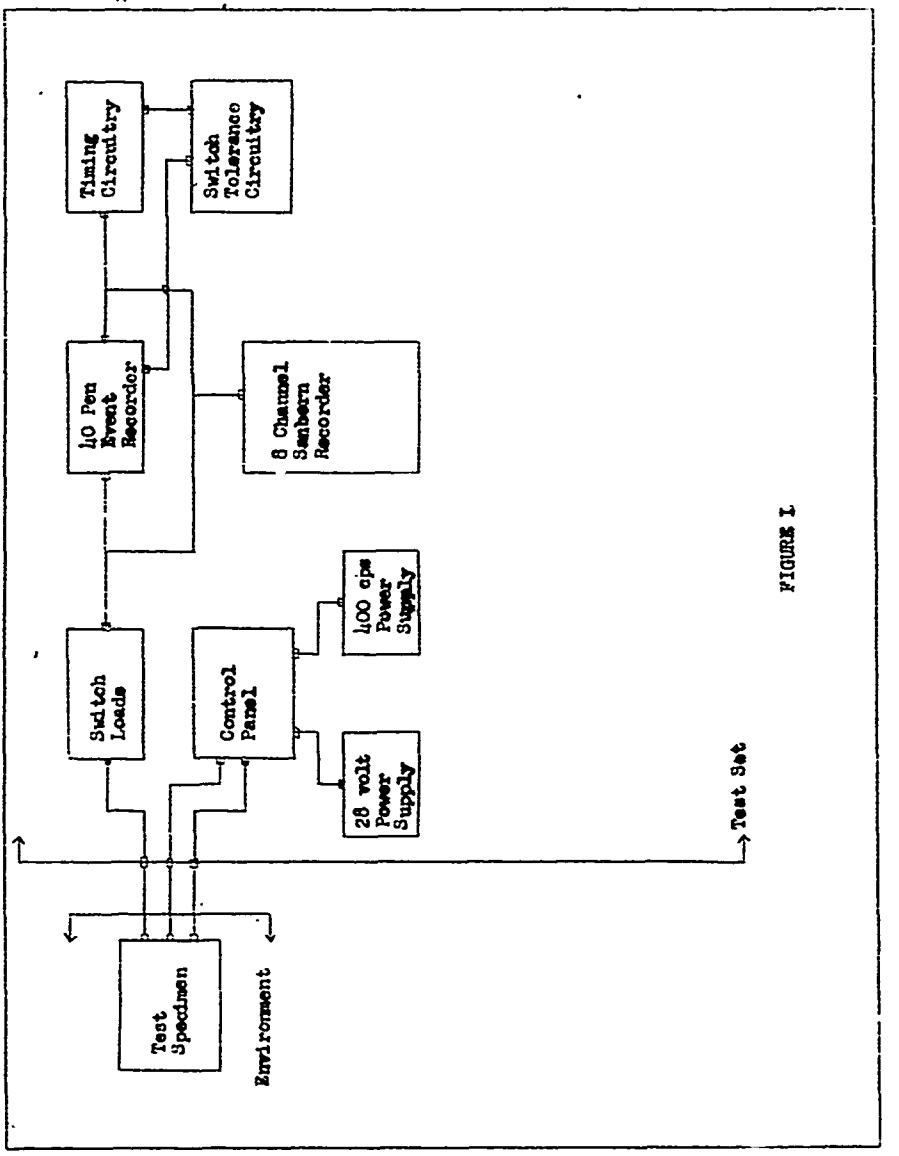
Timing Circuitry
Switch Tolerance Circuitry
40 Pen Event Recorder
8 Channel Sanborn Recorder
Switch Loads
Control Panel
400 cps Power Supply
28 volt Power Supply
Test Set
Test Specimen
Environment

FIGURE 1

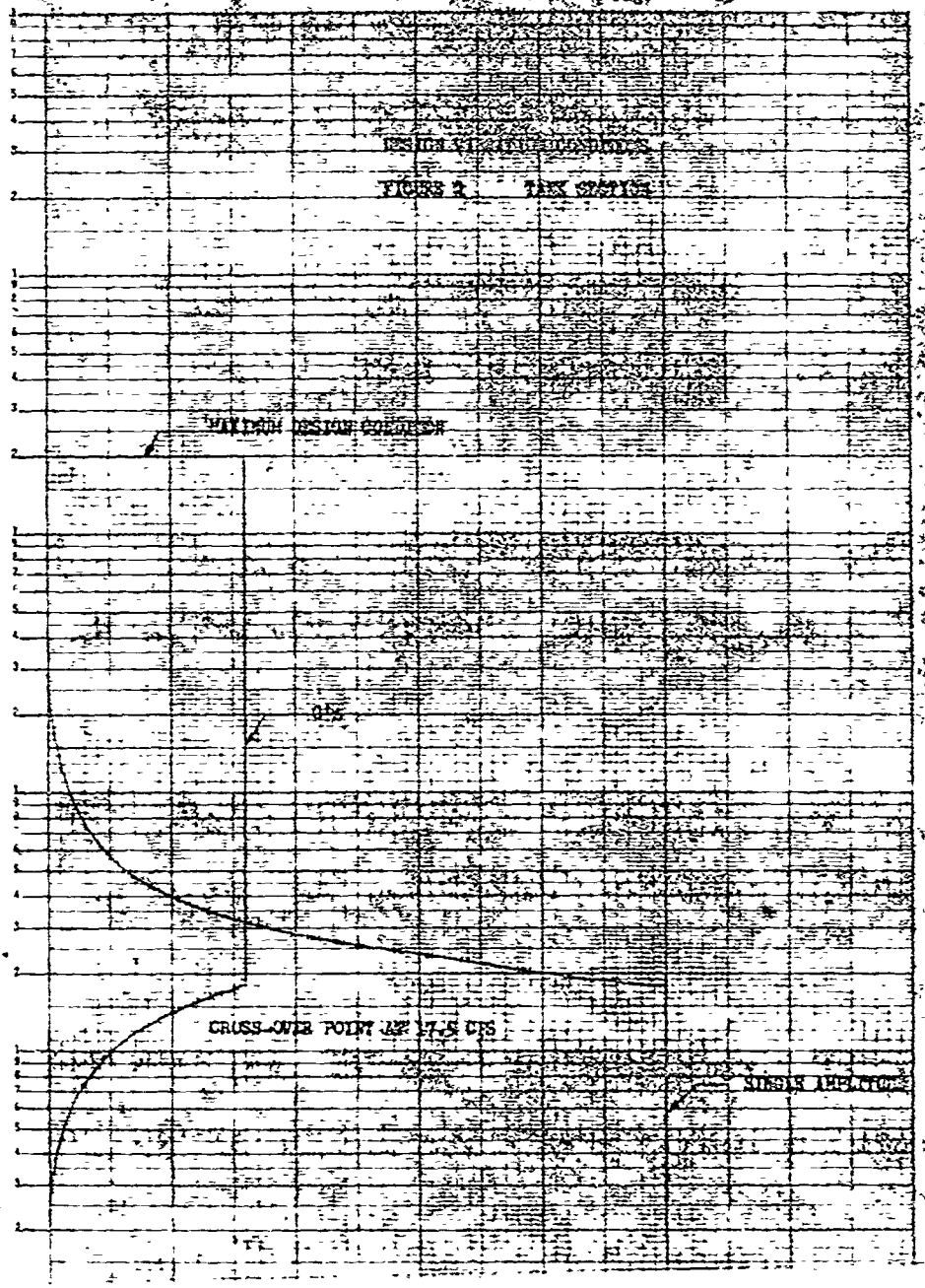

FIGURE 2 TANK SECTION

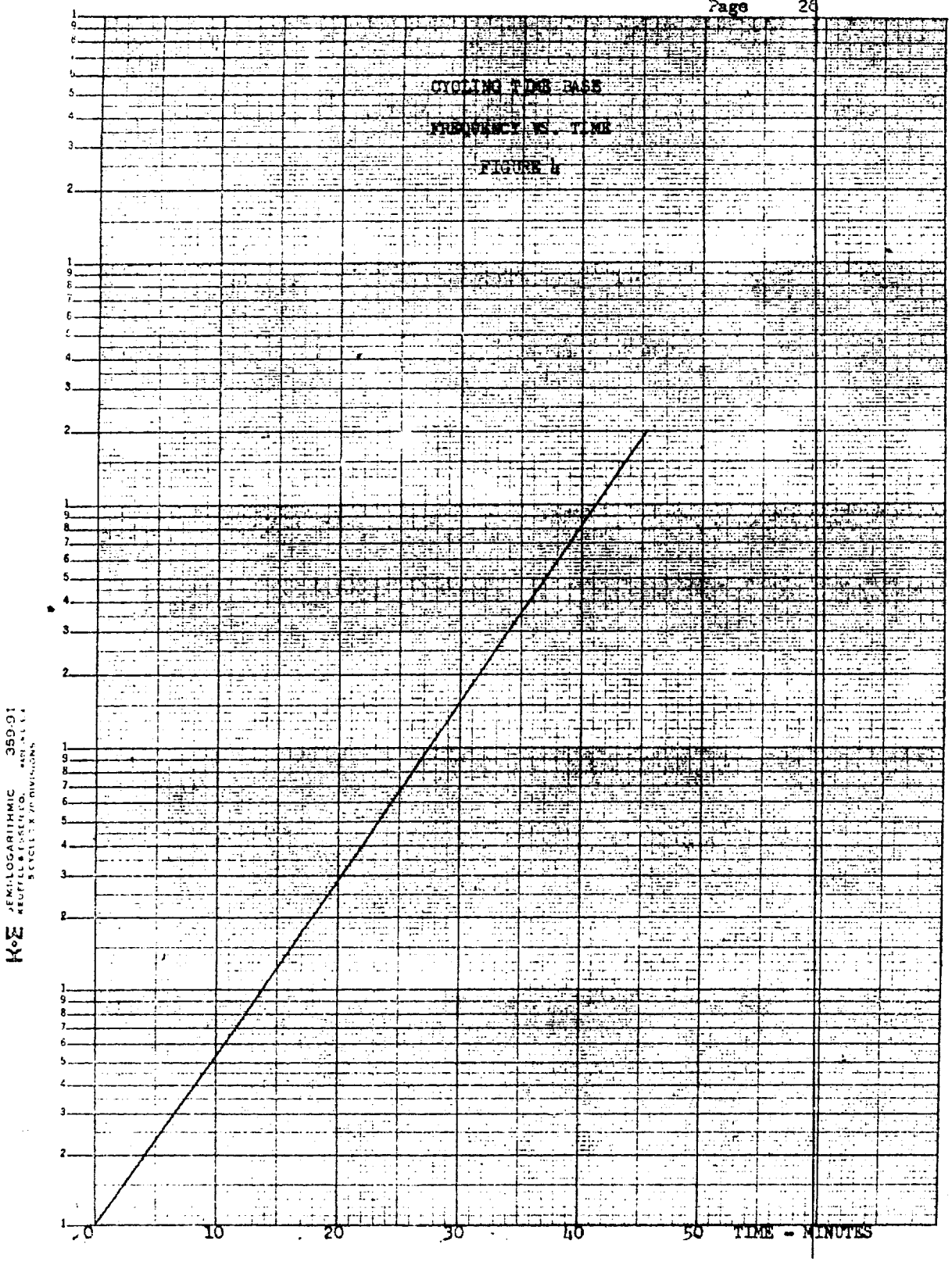

Best Available Copy

INITIAL SATISFACTORY PERFORMANCE DATA SHEET

SPECIMEN S/N 3 Prototype

Date 8/14/59

This data sheet is to be used in conjunction with the operating cycle data sheet when performing the tests outlined in paragraph 4.1.8

Engineer R.E. Bailey H.L. Gusa

Inspection [illegible]

Air Force _____
J. M. Luna

Elaspe Time Meter
Start 35 hrs.
Finish 36 hrs.

Para. 4.1.8	Parameter	Tolerance
(b)	Voltage at Pins J and A of U3J3	In phase max. and out of phase max. 8.0 $^{+1.0}_{-0}$ volts, max. voltage limits to be reached in 70±20 sec. * Voltage 9.2 volts Time 68 sec.
(c)	Arm-Safe Switch	Sucessful operation as indicated by indicator lights shall occur in 10±5 seconds Time 11 secs

* Note. out of Tolerance

OPERATING CYCLE DATA SHEETS

Paragraph 4.1.8

Specimen S/N 3 Prototype

Date 8/14/59
Engineer R. Bailey & H. Gusa
Inspection [illegible]
Air Force
J. M. Luna

4.1.9 OPERATING CYCLE TEST

	Parameter		Level	Time (sec)	Level	Time
(b)	Input Voltages	400 cps	115 volts		115	
		28 volts	27 volts	±2.7	27.7	
(c)	Launch Command (Ref)					
	Switch #9		Lo-Hi	15±.05	12.0	14.995
			Hi-Lo	19±.05	-7.5	18.990
	Switch #10		Lo-Hi	2±.05	12.0	1.995
			Hi-Lo	15±.05	-8.0	14.995
	Switch #11		Lo-Hi	2±.05	18.1	2.010
			Hi-Lo	19±.1 -.05	+94.0	19.060
	Output of terminals F and L of U3J2		0, +0.2		0	
			2.2±0.125	15±.1	2.2	15.0
			1.7±0.125	27±.1	1.7	27.0
			1.9±0.125	39±.1	1.9	39.0
			1.8±0.125	54±.1	1.8	54.0
			1.6±0.125	64±.1	1.6	64.0
			1.3±0.125	74±.1	1.3	74.0
			1.0±0.125	89±.1	1.0	89.0
			0.7±0.125	105±.1	.695	105.0
			0.6±0.125	120±.1	.6	~~Stage~~ 120.0
			0.0	Stg +0.1±0.1		Stage +0.1

Note:

Switches #1, 2, 3, 4, 5, 6, 7, 9, 10 — Lo=-8.0±3.0 volts; Hi=12.5±2.5 volts

Switches #12, 13, 14, 16, 17, 18, 19 — Lo=0 volts; Hi=28 volt supply +0 -4

Switches #11 — Lo=18±0.9 volts; Hi=94±0.45 volts

FORM NO. A-702 1

CONVAIR ASTRONAUTICS

REPORT 7A2248

PAGE 29

OPERATING CYCLE DATA SHEETS
(CONTINUED)

Paragraph 4.1.8

Specimen S/N 3 Prototype

Date 8/14/59
Engineer R. Gailey, H. Gusa
Inspection [signature]
Air Force
J. M. Luna

4.1.9 OPERATING CYCLE TEST

	Parameter	Level	Time (Sec)	Level	Time
(d)	Staging Command (Ref)				
	Switch #1	Hi-Lo	0.1±.05	10.5 -6.5	.100
	Switch #2	Lo-Hi	0.1±.05	-6.0	.100
	Switch #2	Hi-Lo	3.0±.025	11.0	3.000
		Lo-Hi	3.7±.05	-6.0	3.700
	Switch #3	Lo-Hi	0.1±.05	-6.5	.100
		Hi-Lo	6.7±.05	11.0	6.700
	Switch #4	Lo-Hi	6.7±.05	-6.0, 11.5	6.700
	Switch #5	Lo-Hi	0.1±.05	-7.0	.100
		Hi-Lo	10.0±1.0	12.0, -7.0	10.0
	Switch #6	Lo-Hi	0.1±.05	-7.0, 12.0	.100
	Switch #7	Hi-Lo	5.0±.1	12.0, -9.0	5.000
	Switch #12	Lo-Hi	0.1±.05	26.0	.105
	Switch #13	Lo-Hi	3.1±.025	26.0	3.105
	Switch #14	Lo-Hi	64±3.0	25.0	64.
(e)	Sustainer Cutoff Command (Ref)				
	Switch #3	Lo-Hi	0±.1	-6.0, 11.0	0.0
	Switch #5	Lo-Hi	0±.1	-7.0, 12.0	0.0
	Switch #19	Lo-Hi	0±.0	26	0.0
(f)	Vernier Cutoff Command (Ref)				
	Switch #16	Lo-Hi	3.0±0.1	24.0	3.0
	Switch #17	Lo-Hi	4.0±0.1	24.0	4.0
	Switch #18	Lo-Hi	5.0±0.1	24.0	5.020

OPERATING CYCLE DATA SHEETS

Paragraph 7.7

Specimen S/N 3 Prototype

Date 8/15/59
Engineer R. Bailey & H. Gass
Inspection
Air Force
J. M. Luna

Proof Cycle following X, Y, & Z axis of vibration
Elapse Time Meter
Start 36 hrs
Finish

L.1.9 OPERATING CYCLE TEST

	Parameter		Level	Time (sec)	Level	Time
(b)	Input Voltages	400 cps	115 volts		115	
		23 volts	27 volts	±2.7	27.8	
(c)	Launch Command (Ref)				12.0	
	Switch #9		Lo-Hi	15±.05	6.5 to 12.0	18.00
			Hi-Lo	19±.05		19.00
	Switch #10		Lo-Hi	2±.05	12.0	2.00
			Hi-Lo	15±.05	8.0 to 12.0	15.00
	Switch #11		Lo-Hi	2±.05	18.4	2.03
			Hi-Lo	19+.1 -.05	9.4.0	19.09
	Output of terminals F and L of U332		0.±0.2			
			2.2±0.125	15±.1	2.230	15.0
			1.7±0.125	27±.1	1.730	27.0
			1.9±0.125	39±.1	1.930	39.0
			1.8±0.125	54±.1	1.820	54.0
			1.6±0.125	64±.1	1.630	64.0
			1.3±0.125	74±.1	1.330	74.0
			1.0±0.125	89±.1	1.030	89.0
			0.7±0.125	105±.1	.73	105.0
			0.6±0.125	120±.1	.625	120.0
			0.0	Stg +0.1±0.1	0.0	Stage +.10

Note:

Switches #1, 2, 3, 4, 5, 6, 7, 9, 10 — Lo=-8.0±3.0 volts, Hi=12.5±2.5 volts

Switches #12, 13, 14, 16, 17, 18, 19 — Lo=0 volts, Hi=28 volt supply +0 -4

Switches #11 — Lo=18±0.9 volts, Hi=94±0.45 volts

OPERATING CYCLE DATA SHEETS
(CONTINUED)

CVA 59

Paragraph ~~4.8.2~~ 4.7

Specimen S/N 3 Prototype

Proof Cycle following X, Y, & Z axis of vibration

Date 8/15/59
Engineer R. Bailey & H. Guza
Inspection [signature]
Air Force J. M. Luna

4.1.9 OPERATING CYCLE TEST

	Parameter	Level	Time (Sec)	Level	Time
(d)	Staging Command (Ref)				
	Switch #1	Hi-Lo	0.1±.05	10.5 to 6.5	.10
	Switch #2	Lo-Hi	0.1±.05	-5.5	.10
	Switch #2	Hi-Lo	3.0±.025	11.0	3.00
		Lo-Hi	3.7±.05	-5.5 to 11.0	3.70
	Switch #3	Lo-Hi	0.1±.05	-6.0	.10
		Hi-Lo	6.7±.05	11.0 to -6.5	6.690
	Switch #4	Lo-Hi	6.7±.05	-5.5 to 11	6.690
	Switch #5	Lo-Hi	0.1±.05	-7.0	.10
		Hi-Lo	10.0±1.0	12.0 to -7.5	10.00
	Switch #6	Lo-Hi	0.1±.05	-7.0 to 12.0	.10
	Switch #7	Hi-Lo	5.0±.1	12.0 to 10.5	5.00
	Switch #12	Lo-Hi	0.1±.05	+26.0	.10
	Switch #13	Lo-Hi	3.1±.025	+26.0	3.10
	Switch #14	Lo-Hi	64±3.0	+25.5	64.0
(e)	Sustainer Cutoff Command (Ref)				
	Switch #3	Lo-Hi	0±.1	-6.0 to 11.0	0.0
	Switch #5	Lo-Hi	0±.1	-7.5 to 12.5	0.0
	Switch #19	Lo-Hi	0±.05	24.5	0.0
(f)	Vernier Cutoff Command (Ref)				
	Switch #16	Lo-Hi	3.0±0.1	+24.5	3.00
	Switch #17	Lo-Hi	4.0±0.1	+24.5	4.00
	Switch #18	Lo-Hi	5.0±0.1	+24.5	5.00

Best Available Copy

OPERATING CYCLE DATA SHEETS

Paragraph 4.2.1.2 a

Specimen S/N 3 Prototype
Proof Cycle AT 40°F

Date 8/20/59
Engineer [illegible]
Inspection [illegible]
Air Force J. M. Luna

Elapse Time Meter
Start 47 hrs
Finish 47

4.1.9 OPERATING CYCLE TEST

	Parameter	Level	Time (sec)	Level	Time
(b)	Input Voltages 400 cps	115 volts		115V	
	28 volts	27 volts	±2.7	28	
(c)	Launch Command (Ref)				
	Switch #9	Lo-Hi	15±.05	+11.5	15.00
		Hi-Lo	19±.05	-7.5	19.00
	Switch #10	Lo-Hi	2±.05	+11.5	2.00
		Hi-Lo	15±.05	-7.5	15.00
	Switch #11	Lo-Hi	2±.05	17.9	2.01
		Hi-Lo	19±.1 -.05	94.0	9.06
	Output of terminals F and L of U302	0±0.2		0	
		2.2±0.125	15±.1	2.25	15.0
		1.7±0.125	27±.1	1.74	27.0
		1.9±0.125	39±.1	1.94	39.0
		1.8±0.125	54±.1	1.84	54.0
		1.5±0.125	64±.1	1.62	64.0
		1.3±0.125	74±.1	1.31	74.0
		1.0±0.125	89±.1	1.0	89.0
		0.7±0.125	105±.1	.69	105.0
		0.6±0.125	120±.1	.59	120.0
		0.0	Stg +0.1±0.1	0.0	Stop +0.1

Note:

Switches #1, 2, 3, 4, 5, 6, 7, 9, 10 — Lo=-8.0±3.0 volts, Hi=12.5±2.5 volts

Switches #12, 13, 14, 16, 17, 18, 19 — Lo=0 volts, Hi=28 volt supply +0 -4

Switches #11 — Lo=18±0.9 volts, Hi=94±0.45 volts

FORM NO A-702-1

CONVAIR ASTRONAUTICS

REPORT 7A2248
PAGE 33

OPERATING CYCLE DATA SHEETS
(CONTINUED)

Paragraph 4.6.1.6 a

Specimen S/N 3 Protot [illegible]

Date 8/[illegible]
Engineer [illegible]
Inspection [illegible]
Air Force [illegible]
J. M. Luna

4.1.9 OPERATING CYCLE TEST

	Parameter	Level	Time (Sec)	Level	Time
(d)	Staging Command (Ref)				
	Switch #1	Hi-Lo	0.1±.05	+10.0 -6.0	.10
	Switch #2	Lo-Hi	0.1±.05	-5.5	.10
	Switch #2	Hi-Lo	3.0±.025	+10.5	3.00
		Lo-Hi	3.7±.05	-5.5	3.70
	Switch #3	Lo-Hi	0.1±.05	-6.0	.10
		Hi-Lo	6.7±.05	+10.5	6.70
	Switch #4	Lo-Hi	6.7±.05	-6.5	6.70
	Switch #5	Lo-Hi	0.1±.05	-6.5	.10
		Hi-Lo	10.0±1.0	+11.5	10.00
	Switch #6	Lo-Hi	0.1±.05	-6.5 +11.5	.10
	Switch #7	Hi-Lo	5.0±.1	+10.5 -10.0	5.00
	Switch #12	Lo-Hi	0.1±.05	+26	.10
	Switch #13	Lo-Hi	3.1±.025	+26	
	Switch #14	Lo-Hi	64±3.0	+25.5	64.0
(e)	Sustainer Cutoff Command (Ref)				
	Switch #3	Lo-Hi	0±.1	-6.0 +10.5	.10
	Switch #5	Lo-Hi	0±.1	-6.5 +12	.10
	Switch #19	Lo-Hi	0±.1	+25.0	0.00
(f)	Vernier Cutoff Command (Ref)				
	Switch #16	Lo-Hi	3.0±0.1	+25.0	3.0
	Switch #17	Lo-Hi	4.0±0.1	+25.0	4.0
	Switch #18	Lo-Hi	5.0±0.1	+25.0	5.0

Maximum [illegible] 132 F

OPERATING CYCLE DATA SHEETS

Paragraph 4.1.5.c

Specimen S/N [illegible]

Date [illegible]
Engineer [illegible]
Inspection [illegible]
Air Force [illegible]

Elapse Time Meter J. M. Luna
Start 47.9
Finish 48.4

4.1.9 OPERATING CYCLE TEST

	Parameter		Level	Time (sec)	Level	Time
(b)	Input Voltages	400 cps	115 volts		11[illegible]	
		28 volts	27 volts	±2.7	[illegible]	
(c)	Launch Command (Ref)					
	Switch #9		Lo-Hi	15±.05	+11.[illegible]	14.99
			Hi-Lo	19±.05	[illegible]	[illegible]
	Switch #10		Lo-Hi	2±.05	[illegible]	2.00
			Hi-Lo	15±.05	[illegible]	14.99
	Switch #11		Lo-Hi	2±.05	1[illegible]	2.015
			Hi-Lo	19±.1 -.05	9[illegible]	1[illegible]
	Output of terminals F and L of U302		0.±0.2		0.[illegible]	
			2.2±0.125	15±.1	2.[illegible]	15.[illegible]
			1.7±0.125	27±.1	1.[illegible]	[illegible]
			1.9±0.125	39±.1	1.[illegible]	[illegible]
			1.8±0.125	54±.1	1.[illegible]	[illegible]
			1.6±0.125	64±.1	1.[illegible]	64.[illegible]
			1.3±0.125	74±.1	1.[illegible]	[illegible]
			1.0±0.125	89±.1	[illegible]	[illegible]
			0.7±0.125	105±.1	[illegible]	[illegible]
			0.6±0.125	120±.1	[illegible]	[illegible]
			0.0	stg +0.1±0.1	0.[illegible]	[illegible]

Note:

Switches #1, 2, 3, 4, 5, 6, 7, 9, 10 — Lo=-8.0±3.0 volts, Hi=12.5±2.5 volts

Switches #12, 13, 14, 16, 17, 18, 19 — Lo=0 volts, Hi=28 volt supply +0 -4

Switches #11 — Lo=18±0.9 volts, Hi=94±0.45 volts

OPERATING CYCLE DATA SHEETS
(CONTINUED)

Paragraph 4.1.1.6

Specimen S/N 3 Prototype

Proof Engine at 70°F

Date 8/[illegible]/[illegible]

Engineer [illegible]

Inspection [illegible]

Air Force

J. M. Luna

4.1.9 OPERATING CYCLE TEST

	Parameter	Level	Time (Sec)	Level	Time
(d)	Staging Command (Ref)				
	Switch #1	Hi-Lo	0.1±.05	+10; -5.5	0.10
	Switch #2	Lo-Hi	0.1±.05	-5.5;	0.10
	Switch #2	Hi-Lo	3.0±.025	+12.0	3.0
		Lo-Hi	3.7±.05	-5.5	3.70
	Switch #3	Lo-Hi	0.1±.05	-5.5	0.10
		Hi-Lo	6.7±.05	+10.5	6.70
	Switch #4	Lo-Hi	6.7±.05	-5.5; +10.5	6.70
	Switch #5	Lo-Hi	0.1±.05	-7.0	0.10
		Hi-Lo	10.0±1.0	+11.5	10.00
	Switch #6	Lo-Hi	0.1±.05	-7.0; +11.5	0.10
	Switch #7	Hi-Lo	5.0±.1	+11.5; +10	5.00
	Switch #12	Lo-Hi	0.1±.05	+24	0.10
	Switch #13	Lo-Hi	3.1±.025	+66	3.10
	Switch #14	Lo-Hi	64±3.0	+25.5	64.0
(e)	Sustainer Cutoff Command (Ref)				
	Switch #3	Lo-Hi	0±.1	-5.5; +10.5	0.0
	Switch #5	Lo-Hi	0±.1	+11.5; -7.0	0.0
	Switch #19	Lo-Hi	0±.05	+64.1	0.0
(f)	Vernier Cutoff Command (Ref)				
	Switch #16	Lo-Hi	3.0±0.1	+24.1	3.0
	Switch #17	Lo-Hi	4.0±0.1	+24.1	4.0
	Switch #18	Lo-Hi	5.0±0.1	+24.1	5.0

Best Available Copy

OPERATING CYCLE DATA SHEETS

Paragraph 4.2.1.[illegible]

Specimen S/N [illegible]

Date [illegible]
Engineer [illegible]
Inspection [illegible]
Air Force J. M. Luna

Elaspe Time Meter
Start 48.6
Finish 51.2

4.1.9 OPERATING CYCLE TEST

	Parameter		Level	Time (sec)	Level	Time
(b)	Input Voltages	400 cps	115 volts		11[illegible]	
		28 volts	27 volts	±2.7	[illegible]	
(c)	Launch Command (Ref) Switch #9		Lo-Hi	15±.05	+10.5	15.0
			Hi-Lo	19±.05	-7.5	[illegible]
	Switch #10		Lo-Hi	2±.05	+10.5	2.0
			Hi-Lo	15±.05	-7.2	15.0
	Switch #11		Lo-Hi	2±.05	18.80	2.0
			Hi-Lo	19±.1 -.05	94.30	
	Output of terminals F and L of U3J2		0.+0.2		0.0	
			2.2±0.125	15±.1	2.280	15.0
			1.7±0.125	27±.1	1.760	27.0
			1.9±0.125	39±.1	1.980	39.0
			1.8±0.125	54±.1	1.880	54.0
			1.6±0.125	64±.1	1.670	64.0
			1.3±0.125	74±.1	1.350	74.0
			1.0±0.125	89±.1	1.030	89.0
			0.7±0.125	105±.1	.710	105.0
			0.6±0.125	120±.1	.605	120.0
			0.0	Stg +0.1±0.1		[illegible]

Note:

Switches #1, 2, 3, 4, 5, 6, 7, 9, 10 — Lo=-8.0±3.0 volts; Hi=12.5±2.5 volts

Switches #12, 13, 14, 16, 17, 18, 19 — Lo=0 volts; Hi=28 volt supply +0 -4

Switches #11 — Lo=18±0.9 volts; Hi=94±0.45 volts

OPERATING CYCLE DATA SHEETS
(CONTINUED)

Paragraph 1.1.

Specimen S/N [illegible]

Date [illegible]
Engineer [illegible]
Inspection [illegible]
Air Force
J. M. Luna

1.1.9 OPERATING CYCLE TEST

	Parameter	Level	Time (Sec)	Level	Time
(d)	Staging Command (Ref)				
	Switch #1	Hi-Lo	0.1±.05	+14.5, -6.5	0.10
	Switch #2	Lo-Hi	0.1±.05	+5.5	0.10
	Switch #2	Hi-Lo	3.0±.025	+11.0	3.00
		Lo-Hi	3.7±.05	-5.5	3.70
	Switch #3	Lo-Hi	0.1±.05	-6.0	0.10
		Hi-Lo	6.7±.05	+11.0	6.70
	Switch #4	Lo-Hi	6.7±.05	-5.5, +11.0	6.70
	Switch #5	Lo-Hi	0.1±.05	-7.0	0.10
		Hi-Lo	10.0±1.0	+11.5	10.00
	Switch #6	Lo-Hi	0.1±.05	-7. +11.5	0.10
	Switch #7	Hi-Lo	5.0±.1	+11.5, -12.0	5.00
	Switch #12	Lo-Hi	0.1±.05	+15.5	0.10
	Switch #13	Lo-Hi	3.1±.025	[illegible]	3.10
	Switch #14	Lo-Hi	64±3.0	+15	64.00
(e)	Sustainer Cutoff Command (Ref)				
	Switch #3	Lo-Hi	0±.1	-6.0, +14.0	0.00
	Switch #5	Lo-Hi	0±.1	-7.0, +14.0	0.00
	Switch #19	Lo-Hi	0±.05	+15	0.00
(f)	Vernier Cutoff Command (Ref)				
	Switch #16	Lo-Hi	3.0±0.1	+24.5	3.00
	Switch #17	Lo-Hi	4.0±0.1	+24.5	4.00
	Switch #18	Lo-Hi	5.0±0.1	+24.5	5.00

OPERATING CYCLE DATA SHEETS

Paragraph

Specimen S/N

Date

Engineer

Inspection

Air Force

J. M. Luna

Elapse Time Meter
Start 51.2 hrs
Finish 53.1 hrs

4.1.9 OPERATING CYCLE TEST

	Parameter		Level	Time (sec)	Level	Time
(b)	Input Voltages	400 cps	115 volts		115	
		28 volts	27 volts	±2.7		
(c)	Launch Command (Ref)					
	Switch #9		Lo-Hi	15±.05	12.5	15.00
			Hi-Lo	19±.05		
	Switch #10		Lo-Hi	2±.05	12.50	2.00
			Hi-Lo	15±.05	12.5	15.00
	Switch #11		Lo-Hi	2±.05	18.6	2.00
			Hi-Lo	19±.1 -.05	94.0	
	Output of terminals F and L of U302		0.±0.2		0.0	
			2.2±0.125	15±.1	[illegible]	15.0
			1.7±0.125	27±.1	[illegible]	27.0
			1.9±0.125	39±.1	[illegible]	39.0
			1.9±0.125	54±.1	[illegible]	54.0
			1.6±0.125	64±.1	[illegible]	64.0
			1.3±0.125	74±.1	[illegible]	74.0
			1.0±0.125	89±.1	[illegible]	89.0
			0.7±0.125	105±.1	[illegible]	[illegible]
			0.6±0.125	120±.1	[illegible]	[illegible]
			0.0	Stg +0.1±0.1	0.0	[illegible]

Note:

Switches #1, 2, 3, 4, 5, 6, 7, 9, 10 — Lo=-8.0±3.0 volts, Hi=12.5±2.5 volts

Switches #12, 13, 14, 16, 17, 18, 19 — Lo=0 volts, Hi=28 volt supply +0 -4

Switches #11 — Lo=18±0.9 volts, Hi=94±0.45 volts

OPERATING CYCLE DATA SHEETS
(CONTINUED)

Paragraph

Specimen S/N

Date
Engineer
Inspection
Air Force
J. M. Luna

4.1.9 OPERATING CYCLE TEST

	Parameter	Level	Time (Sec)	Level	Time
(c)	Staging Command (Ref)				
	Switch #1	Hi-Lo	0.1±.05	+25,-6.5	0.1
	Switch #2	Lo-Hi	0.1±.05	-5.5	0.10
	Switch #2	Hi-Lo	3.0±.025	+110	3.00
		Lo-Hi	3.7±.05	-5.5	3.7
	Switch #3	Lo-Hi	0.1±.05	-6.0	0.1
		Hi-Lo	6.7±.05	+110	6.70
	Switch #4	Lo-Hi	6.7±.05	-5.5,+11.5	6.70
	Switch #5	Lo-Hi	0.1±.05	-7.5	.10
		Hi-Lo	10.0±1.0	+11.5	10.0
	Switch #6	Lo-Hi	0.1±.05	-7.5,+11.5	.10
	Switch #7	Hi-Lo	5.0±.1	+12.5,-120	5.0
	Switch #12	Lo-Hi	0.1±.05	+26	.1
	Switch #13	Lo-Hi	3.1±.025	+26	3.10
	Switch #14	Lo-Hi	64±3.0	+25.5	64.0
(e)	Sustainer Cutoff Command (Ref)				
	Switch #3	Lo-Hi	0±.1	-6.0,+11.5	0.
	Switch #5	Lo-Hi	0±.1	-7.5,+12.5	[illegible]
	Switch #19	Lo-Hi	0±.8	+12.5	0.00
(f)	Vernier Cutoff Command (Ref)				
	Switch #16	Lo-Hi	3.0±0.1	+24.5	[illegible]
	Switch #17	Lo-Hi	4.0±0.1	+24.5	[illegible]
	Switch #18	Lo-Hi	5.0±0.1	[illegible]	[illegible]

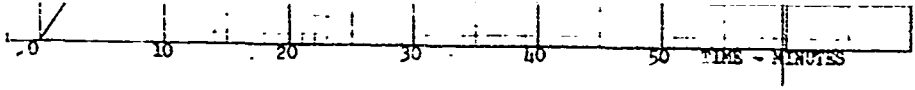

OPERATING CYCLE DATA SHEETS

Paragraph 4.10

Specimen S/N 3 Prototype

Proof Cycle After acceleration

Date 8/29/59

Engineer H. Gunn

Inspection

Air Force

J. M. Luna

Elapse Time Motor.

Start 53.1 hrs.

Finish 55.9 hrs.

4.1.9 OPERATING CYCLE TEST

	Parameter		Level	Time (sec)	Level	Time
(b)	Input Voltages	400 cps	115 volts		115	
		23 volts	27 volts	±2.7	28.0	
(c)	Launch Command (Ref)					
	Switch #9		Lo-Hi	15±.05	+11.5	15.00
			Hi-Lo	19±.05	-7.5	19.00
	Switch #10		Lo-Hi	2±.05	+11.5	2.00
			Hi-Lo	15±.05	-7.5	15.00
	Switch #11		Lo-Hi	2±.05	185	2.02
			Hi-Lo	19±.1 -.05	94.0	19.07
	Output of terminals F and L of U302		0.±0.2		0	
			2.2±0.125	15±.1	2.250	15.00
			1.7±0.125	27±.1	1.750	21.00
			1.9±0.125	39±.1	1.950	39.00
			1.8±0.125	54±.1	1.850	54.00
			1.6±0.125	64±.1	1.650	64.00
			1.3±0.125	74±.1	1.340	74.00
			1.0±0.125	89±.1	1.020	89.00
			0.7±0.125	105±.1	0.70	105.00
			0.6±0.125	120±.1	0.60	120.00
			0.0	Stg +0.1±0.1	0.00	Stage +0.10

Note:

Switches #1, 2, 3, 4, 6, 6, 7, 9, 10 — Lo=-3.0±3.0 volts; Hi=12.5±2.5 volts

Switches #12, 13, 14, 16, 17, 18, 19 — Lo=0 volts; Hi=28 volt supply +0 -4

Switches #11 — Lo=18±0.9 volts; Hi=94±0.15 volts

OPERATING CYCLE DATA SHEETS
(CONTINUED)

Paragraph 4.10

Specimen S/N 3 Prototype
Proof Cycle After Acceleration

Date 8/29/59
Engineer N. Guza
Inspection [illegible]
Air Force
J. M. LUna

4.1.9 OPERATING CYCLE TEST

	Parameter	Level	Time (Sec)	Level	Time
(d)	Staging Command (Ref)				
	Switch #1	Hi-Lo	0.1±.05	+10.5, -6.0	0.10
	Switch #2	Lo-Hi	0.1±.05	-5.5	0.10
	Switch #2	Hi-Lo	3.0±.025	+10.5	3.00
		Lo-Hi	3.7±.05	-5.5	3.70
	Switch #3	Lo-Hi	0.1±.05	-6.0	0.10
		Hi-Lo	6.7±.05	+10.5	6.70
	Switch #4	Lo-Hi	6.7±.05	-5.5, +10.5	6.70
	Switch #5	Lo-Hi	0.1±.05	-7.0	0.10
		Hi-Lo	10.0±1.0	+11.5	10.00
	Switch #6	Lo-Hi	0.1±.05	-7.0, +11.5	0.10
	Switch #7	Hi-Lo	5.0±.1	+11.0, -10.0	5.00
	Switch #12	Lo-Hi	0.1±.05	+26.0	0.10
	Switch #13	Lo-Hi	3.1±0.025	+25.5	3.10
	Switch #14	Lo-Hi	64±3.0	+25.0	64.00
(e)	Sustainer Cutoff Command (Ref)				
	Switch #3	Lo-Hi	0±.1	-6.0, +10.0	0.00
	Switch #5	Lo-Hi	0±.1	-7.0, +11.5	0.00
	Switch #19	Lo-Hi	0±.05	+24.5	0.00
(f)	Vernier Cutoff Command (Ref)				
	Switch #16	Lo-Hi	3.0±0.1	+24.5	3.00
	Switch #17	Lo-Hi	4.0±0.1	+24.5	4.00
	Switch #18	Lo-Hi	5.0±0.1	+24.5	5.00