UNCLASSIFIED

AD NUMBER

AD814055

NEW LIMITATION CHANGE

TO

Approved for public release, distribution unlimited

FROM

Distribution authorized to U.S. Gov't. agencies only; Administrative/Operational Use; 20 FEB 1967. Other requests shall be referred to Army Nuclear Defense Lab., Edgewood Arsenal, MD.

AUTHORITY

DNA ltr, 28 Mar 1973

THIS PAGE IS UNCLASSIFIED

DASA-1800-VI

AD814055

DEPARTMENT OF DEFENSE LAND FALLOUT PREDICTION SYSTEM

Volume VI
OUTPUT PROCESSOR

DDC
MAY 24 1967
A

DASA • NDL • NRDL • TECH OPS

Best
Available
Copy

DASA-1800-VI

DEPARTMENT OF DEFENSE
LAND FALLOUT PREDICTION SYSTEM

Volume VI - Output Processor

TO-B 66-48

20 February 1967

Prepared By

T.W. Schwenke and P. Flusser

This research has been sponsored by the
Defense Atomic Support Agency
under NWER Subtask A7a/10.058

Submitted to

U.S. Army Nuclear Defense Laboratory
Edgewood Arsenal, Maryland

STATEMENT #3 UNCLASSIFIED

Each transmittal of this document outside the agencies of the U.S. Government must have prior approval of Director DASA Wash. DC. 20301

PAGES THAT FOLLOW ARE BLANK

ACKNOWLEDGMENTS

The development of the Output Processor for the Department of Defense Land Fallout Prediction System was funded by the Defense Atomic Support Agency under Subtask A7a/10.058 through Contract DA 18-035-AMC-737(A) with the Nuclear Defense Laboratory. The authors gratefully acknowledge the contributions of Mr. R. C. Tompkins of the Nuclear Defense Laboratory.

ABSTRACT

The Output Processor Module of the Department of Defense Land Fallout Prediction System is described and instructions are given for its use. Working in close liaison with the Particle Activity Module (Volume V), the Output Processor converts the output of the Transport Module into a variety of displays in a directly contourable numerical (map) form by means of the off-line printer. It requires only two sets of input data in addition to the inputs called for by the Particle Activity Module: (1) a magnetic tape containing descriptions of sets of grounded fallout particles — an input from the Transport Module, and (2) card inputs by which the user may request any number of processing tasks to be carried out on the grounded fallout particle data. In each request any of sixteen distinct types of processing may be specified leading to the display of maps of any of the following quantities: (1) exposure rate "normalized" to H + 1 hour; (2) exposure rate at time H + T1 hours; (3) integrated exposure, H + T1 to infinity, accounting for time of arrival; (4) integrated exposure, H + T1 to H + T2, accounting for time of arrival; (5) fallout mass (per unit area); (6) fallout mass (per unit area) deposited between times H + T1 and H + T2; (7) integrated exposure, H + T1 to H + T2, assuming all particles have arrived by H + T1 hours; (8) same as 7 but integrated to infinity; (9) concentration of an individual mass chain (curies/m^2); (10) time of arrival; (11) time of cessation; (12) smallest particle deposited; (13) largest particle deposited; (14) mass deposited by particles in the size range S1 to S2; (15) H + 1 hour "normalized" exposure rate resulting from particles in the size range S1 to S2; and (16) the number of cloud (model) subdivisions affecting each map grid point. The user is free to specify any limiting coordinates and scale factors for the map display that will be produced and can also cause the resulting map, or maps, to be recorded on magnetic tape for further processing.

TABLE OF CONTENTS

	Page
INTRODUCTION	1
PROGRAM DESCRIPTION	1
The Basic Operation of the Output Processor	1
Flexibility of the Output Processor	3
Inputs to the Output Processor	4
Available Options for Computation and Display	5
Sequences of Processing Requests	8
Output Processing Independent of Other DELFIC Modules	8
General Logic of the Output Processor	9
AN ILLUSTRATION OF OUTPUT PROCESSOR USE	15
PROGRAM DETAILS	17
Control Program LINK8	17
Control Program LINK9	18
Subroutine CALC	21
Subroutine COUNT	25
Subroutine CRDP	28
Subroutine LETSGO	31
Subroutine MAP	31
Subroutine PROC	37
Subroutine RUN1	37
Subroutine SHAPE	40
Subroutine SLIDE	44
Subroutine ZERO	44
Subroutine DIFUZ1	44
USER INFORMATION	47
Card Inputs	47
Card 1. Output Processor Run Identification	47
Card 2. Available Tape Identifications	47

TABLE OF CONTENTS (Cont'd.)

	Page
Card 3. Overall Control Variables	49
Card 4. Printer Description	49
Card 5. Map Parameters	49
Card 6. Local Control Variables	50
Cards 7, 8. Processing Requests	51
Binary Input	52
FORTRAN LISTINGS	55
THE PRINTED OUTPUT OF THE PROGRAM	99
APPENDIX. PRIMARY ARRAYS OF THE OUTPUT PROCESSOR	111

LIST OF TABLES

Table		Page
1	Output Processor Program Synopsis	10
2	Details of the Output Processor Data Deck	48
3	Available Computation Codes	52
4	The Grounded Particles Tape, 1POUT	53

LIST OF ILLUSTRATIONS

Figure		Page
1	The Map Area Without Subdivision	12
2	The Map Area With Subdivision	14
3	Map Coverage Example	16

LIST OF FLOW CHARTS

Chart		Page
FC-1	Organization Flow Chart of the Output Processor	11
FC-2	Main Program LINK8	19
FC-3 (a-c)	Main Program LINK9	22
FC-4 (a-b)	Subroutine CALC	26
FC-5	Subroutine COUNT	29
FC-6	Subroutine ORDER	30
FC-7	Subroutine LETSGO	32
FC-8 (a-c)	Subroutine MAP	34
FC-9 (a-b)	Subroutine PROC	38
FC-10	Subroutine RUN1	41
FC-11	Subroutine SHIFT	42
FC-12	Subroutine SLIDE	45
FC-13	Subroutine ZERO	46

INTRODUCTION

This volume is intended to fulfill two needs: (1) to provide information to the person who is interested only in understanding the Output Processor or in using it as it is; and (2) to provide a more detailed explanation of the programs and their functions to the researcher or programmer who would make modifications or additions. The sections entitled "Program Description," "Illustration of Output Processor Use," and "User Information" are intended to fulfill the first need; the section "Program Details," the second need.

PROGRAM DESCRIPTION

The Basic Operation of the Output Processor

The Output Processor of the DOD Land Fallout Prediction System is a very flexible, highly modular computer program for use in the interpretation of data representing grounded subdivisions of the radioactive cloud. In simplest terms, it is the task of the Output Processor to accept descriptions of grounded cloud subdivisions, make requests for particle activities or mass chain concentrations from the Particle Activity Module, interpret them into a two-dimensional memory array or map image, and then print the resulting array in a form suitable for viewing as a map. The processes originally required of the Output Processor were the computation of (1) exposure rate "normalized"* to H + 1 hour, (2) exposure rate at a specified time, (3) exposure accumulated between two specified times, (4) particle mass deposited per unit area, and (5) concentration of a user specified mass chain. In certain of these processes the time of particle arrival on the fallout field was also to be accounted for.

---

*Exposure rate patterns "normalized" to H + 1 hour are intended to show the exposure rates that would exist on the fallout field one hour after detonation if all radioactive particles that ever land on the fallout field were located in their places of deposit at that time. Obviously this differs from the exposure rate pattern predicted to exist one hour after detonation, since in actual exposure rate prediction we must account for the times at which particles arrive on or near the ground.

Best Available Copy

The following statements of requirement and intent describe some of our initial motivations and justifications for the approach which was followed in the construction of the Output Processor:

1. Great flexibility in program use should be allowed both in terms of the nature of computations and tasks and in terms of the degree of precision in both modeling and display.

2. The Output Processor should be capable of handling a large set of grounded particle data. The size of this set might vastly exceed available memory space. Thus an open-ended philosophy was adopted for the treatment of data on grounded particles.

3. The position and scale factor of the map should be under the direct control of the researcher. This gives the user or researcher the ability to produce maps of any desired scale factor for superposition on other maps and enables him to achieve either a microscopic or a macroscopic view of the predicted fallout field.

4. The Output Processor should be capable of handling output maps containing a larger number of map grid points than can be represented in the computer memory at one time. This led us to an open-endedness in output map size.

5. In computing exposure rates at arbitrarily specified times, it is deemed of great importance to avoid reliance on a single exponential decay constant (such as - 1.2) which is truly applicable only to a mixture of unfractionated fission products — not in general to isolated samples of fallout such as those that appear locally in fallout fields. Therefore, the Output Processor Module should be built to work in close liaison with the Particle Activity Module so that particle activities can be computed directly from the primary mass chain data for (deposited) particles at the particular time or times specified in each output request. Furthermore, by means of this approach it should be possible to compute and display concentrations of any (user) specified mass chain.

6. With regard to display of the fallout map data produced by the Output Processor we are faced with somewhat conflicting requirements: (1) we desire a numerical display of the data rather than some sort of purely pictorial or graphical display because of the intended research application of the system, whereas (2) an automated pictorial or graphical display relieves the researcher of the time consuming and tedious task of transferring numerical data to a grid and hand contouring isoexposure lines. The display actually provided is a compromise between these two extremes. A numerical display is provided; however, it is in a format that allows strips of the printed computer output to be attached side-by-side so that the entire fallout prediction area is included on the assembled paper. Thus, the printed numbers represent exposure rate (or some other output) predicted for each of the points of a regular grid that can be arranged to be spatially undistorted, and the resulting map can be easily contoured directly on the printer output paper. The major disadvantage of this type of display is the large size of the maps produced.

7. In general, it was desired that the Output Processor be simple to use and be reasonably foolproof and automatic with respect to its internal operations. Since the sizes of input and output data sets were assumed to be widely varying, this led us to a certain amount of essentially "dimension free" programming with the objective of making it unnecessary in most situations for the user to explicitly modify memory allocations (dimension statements) and recompile programs in order to change the program's scale of operation.

Flexibility of the Output Processor

For a research system — one which is capable of aiding the researcher in his many and varied tasks — no single approach to flexibility is sufficient and, consequently, we have designed the Output Processor with three modes of flexibility in mind: (1) program modularity; (2) parameter controlled options; and (3), as a midground between these two, code insertion points.

First, functional subroutines have been designed to operate wherever functions could be clearly seen. For example, within the Output Processor there are a subroutine (CALC) with the primary function of interpreting ground cloud subdivisions into a two-dimensional array, and a separate subroutine (MAP) with the function of composing and displaying the computational results. These functional subroutines may be relatively easily replaced by other subroutines having similar purposes. As an example of the second mode of flexibility, in CALC all currently required computational tasks have been accounted for and these computational alternatives are treated as parameter-controlled options within the program. In order to select one of the available computational options, the user need only punch on an input card the appropriate numerical value for an input parameter, in this case the parameter NREQ. Furthermore, provision has been made in the CALC option selection procedure (as well as in those of other programs) for the future inclusion of other computational option codes with little or no modification to the control programming within the subroutine. Such insertion points (noted in the flow charts and card listings) represent the third mode of program flexibility.

Inputs to the Output Processor

The primary input to the Output Processor is the magnetic tape of grounded particle descriptions which is produced by the Transport Program. For each included central particle (representing a cloud subdivision) this tape contains the two horizontal coordinates of its impact point, its time of impact, the central particle size, and a mass per horizontal unit area covered by the cloud subdivision. In addition, this tape contains a tabulation of particle properties (mass and surface/volume ratio) as a function of particle size range.

In addition to this primary input the user must communicate to the program his wishes regarding the kind of output computation and its form of presentation. He must also provide run identification information and information on certain important computer features. The run identifier is an arbitrary 72 character statement which the user can set to identify and associate outputs and inputs. The other inputs are needed to allow the program to adapt to some degree to different computer environments.

The following algebraic sentence summarizes the operation of the Output Processor:

Particle impact data

+ available tapes and printer characteristics

+ map characteristics

+ computation option specification

+ display option specification

⟹ desired presentation.

By available tapes we mean simply the identifiers of magnetic tape units that are available for temporary use by the Output Processor. The printer characteristics are the character spacing constants for the off-line printer. The map characteristics are, at this time, the description of the geographical limits and data point density of the map which is to be produced as output. By computation option we mean the choice of one of the many alternative output quantities to be computed and displayed. By display option we mean the choice of a particular printed map format; perhaps in the future it could also specify a format for another kind of output device.

Available Options for Computation and Display

The following is a listing and brief discussion of the major options for computation and display which exist in the Output Processor. An exhaustive list of all currently available options is provided in the section entitled "User Information."

1. Printed descriptions of impacted particles

   Under this option the content of the grounded particles tape may be printed in a form analogous to that in which it exists on the transport tape (IPOUT). This option is valuable in checking the execution of experimental transport codes, and it is also useful in providing a hard and readable copy of the result of transport production runs.

2. Computational options

The descriptions below apply to each point of the map grid.

a. Count of grounded cloud subdivisions. This optional computation was of primary value in debugging the Output Processor but may also be of considerable value to the researcher in assessing the statistical validity of a computed map quantity at any particular point on the map.

b. Exposure rate "normalized" to time H + 1 hour. This is the recognized standard mathematical construct for the comparison of fallout patterns. It should be noted that differences may exist between DELFIC H + 1 hour normalizations and those resulting directly, or indirectly, from backward extrapolations of field data — in backward extrapolations one decay constant is usually used, whereas DELFIC provides a more rigorous modeling of radioactive decay.

c. Exposure rate at time H + T1. This is actually the exposure rate at the specified time taking into account the impact times of all cloud subdivisions.

d. Exposure accumulated from time H + T1 to infinity. This is the exposure as integrated from time H + T1 or particle impact time, whichever is later, for each impacted particle.

e. Exposure accumulated from time H + T1 to time H + T2. This is the exposure as integrated from time H + T1 or particle impact time (whichever is later) to time H + T2. A faster alternative treatment of accumulated exposure not accounting for particle impact time is also provided.

f. Total mass deposited. This is the mass of fallout, both radioactive and inert, deposited on the map grid points during the entire fallout period.

g. Total mass deposited between times T1 and T2. This is the total mass, both active and inert, deposited during the specified interval.

h. Activity produced by a user specified mass chain (curies/m^2).

3. The undistorted map option

A number of different options exist with regard to the scaling of output maps. As stated previously (p. 3), it is possible for the Output Processor to provide a numerical presentation of the fallout data on a spatially undistorted grid. In achieving this the user is assisted by the program. However, he must supply the printer characteristics (characters/inch both horizontally and vertically) and must specify that the "undistorted map option" is to be exercised. Then the program determines appropriate grid spacings to accommodate the printer characteristics. On the other hand, the user may specify the grid intervals and in so doing he can obtain any rectangular spatial distortion he desires. Also, he may allow the program to make small adjustments to the specified grid intervals to achieve a faster running program if an undistorted map is not a requirement. In any case, an overall scale factor for the map must be specified.

4. Numerical display options

Two options exist at this time for printing the numerical values of the fallout data over the grid points. These options, which can be characterized as the two-line E format and the two-line F 11.3 format, are explained and illustrated, as follows, for a single data point:

a. The two-line E format,

```
NNNNNN
      ±V.VVV ,
```

which is to be interpreted as

$$\pm V.VVV \times 10^{NNNNNN}$$

b. The two-line F 11.3 format,

```
NNNNNN
      ±V.VVV ,
```

which is to be interpreted as

$$\pm NNNNNNV.VVV \ .$$

In both of these display options the decimal point indicates the map location of the grid point.

In addition to the two options for printing numerical values, a third option exists which allows a numerical map image to be recorded on a magnetic tape referred to as the multiple burst tape. Matched pairs of multiple burst tapes may be processed by a separate program (see Volume VII of this documentation) to form printed or tape recorded maps of the point-by-point sums, differences, products, or quotients resulting from map superposition.

Sequences of Processing Requests

The Output Processor has been arranged to accept as input a sequence of requests for processing. This was deemed appropriate because of the large number of different quantities which might be of interest to the researcher now, and also after further development of the program, and because of the usual turn-around time delays which plague the users of computer centers operating with a batch processing system. Rather than handling requests on a one-per-run basis, unlimited sequences of requests are accepted. Thus, the program is open-ended with respect to requests on a given grounded-particles data set.

The control programming of the Output Processor is designed to allow any number of maps to be prepared for each of any number of different map limits. Suppose the user desires sets of maps to be prepared separately for each of two different sets of map limits. For example, the user may desire large-scale maps of essentially the entire local fallout field for (1) exposure rate normalized to H + 1 hour, (2) total accumulated exposure, and (3) activity from mass chain 95. He may also desire the same map options for a physically larger map covering a geographically smaller area closer-in to ground zero. To accomplish this he can specify the map limits and scale factor for the large-scale map and follow it by the needed map option request cards. These data would be followed in turn by the other map limit specifications and another series of map option request cards.

Output Processing Independent of Other DELFIC Modules

In its primary role the Output Processor acts as the terminal portion of the main body of the DELFIC system; yet, since it consists of control programs and

a set of subroutines, it can also operate independently of the other programs of the DELFIC system except for the Particle Activity Module. (See the section on "Inputs to the Output Processor," p. 4.) This feature can be used to advantage if the user saves the magnetic tape results of the transport program's execution. In this way the user need not specify all desired output at the time of the transport execution but can make subsequent runs of the Output Processor as specific questions arise during the course of his research. The tape and card inputs to the Output Processor are the same, no matter which way the program is used.

General Logic of the Output Processor

In this section we present a general description of the logic of the Output Processor including general or organizational flow charts. A more detailed description, which includes highly detailed flow charts of all subroutines and a complete discussion of the more involved subroutines, is given in the Program Details section. Particular emphasis is given to those programs which we feel individual users may desire to modify for the sake of adding new capabilities to the DELFIC system. Additional details are also provided in the Appendix, which defines the various arrays used by the Output Processor programs, and by the glossary of primary program variables which is included in the listing of the first control program, subroutine LINK8.

The Output Processor consists of two control programs and eleven subroutines (a brief statement of the purposes of these programs is set forth in Table 1). In addition, the Particle Activity Module subroutines PAM1 and PAM2 (see Volume V of this documentation) are called within the Output Processor. It should be noted that subroutine PAM1 requires certain card and/or tape inputs to be available during the execution of the Output Processor.

Flow chart FC-1 gives a simplified picture of the logic of the control programs, LINK8 and LINK9, and is a suitable point of departure for the reader who wishes to understand the Output Processor in depth. In the topmost diamond box of the flow chart we note that one of the optional features of the Output Processor allows the user to have the content of the grounded particles tape printed, and have the processing terminated upon completion of this or continued as specified. Following downward one can see the hierarchical nature of the map limits specification loop which begins with the reading of the coordinate limits of a map, and the map request

TABLE 1

OUTPUT PROCESSOR PROGRAM SYNOPSIS

Program Name	Purpose
LINK8	Initialization and liaison with subroutine PAM1 (Particle Activity Module) and LINK9.
LINK9	Interpret grounded particles into the output map array and call PAM2 (Particle Activity Module) for particle activities or mass chain concentrations.
CALC	Interpret grounded particles into the map array.
COUNT	Select the largest sorted data set for dumping onto memory tape.
CRDP	Subordinate control routine which calls SHIFT to clear out most of the particles array after a pass of the data tape has been completed.
DIFUZ1	Expand cloud subdivision areas to account for diffusion.
LETSGO	Control routine for the situation in which sorting onto tape is required.
MAP	Display the Output (Print the Map).
PROC	Subordinate control routine which eliminates unneeded particles, sorts and counts other particles, and calls CALC to interpret those falling within the current map area.
RUN1	Control routine for the situation in which no data sorting onto tape is required.
SHIFT	Collect a selected set of particle descriptions and write them onto memory tape.
SLIDE	Slide the content of the right buffer zone over to the left zone in preparation for processing the next map zone.
ZERO	Collect blank lines at the top of the particles arrays in preparation for reading in more particle descriptions.

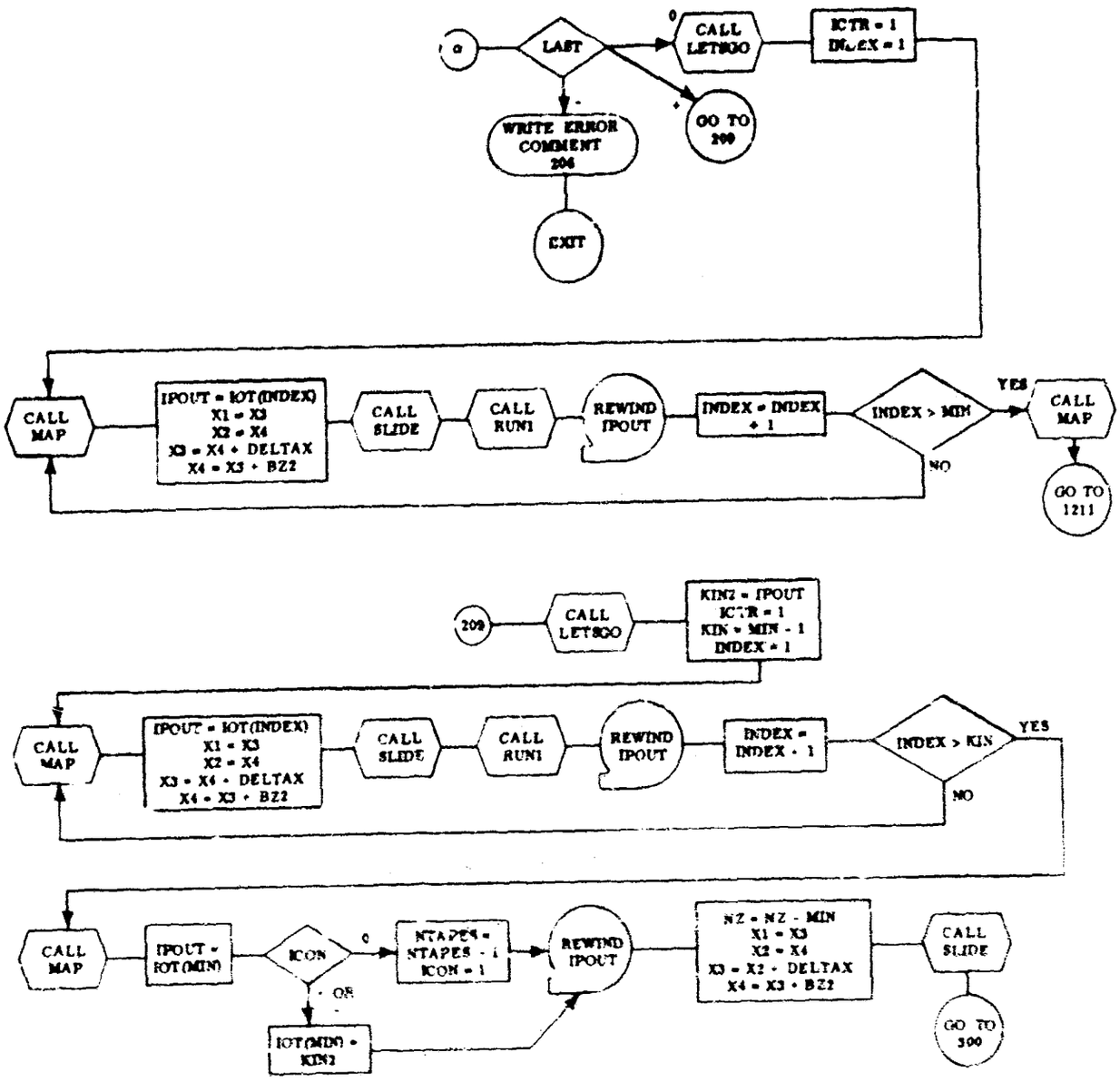

FC-1. Organization Flow Chart of the Output Processor

loop which begins with the reading of a computation request (see the Sequences of Processing Requests section on p. 8). It should be noted that, in order to bring about a final program exit, the program must encounter a blank card (image) to terminate the map request loop, and then another blank card to terminate the map limit specification loop. Most of the program's complexities are found within the two lowest boxes of FC-1 and, consequently, the remainder of this discussion will be devoted to them.

The user of the Output Processor must specify the area that he wishes to be mapped by indicating its limiting coordinates. This area is rectangular with its sides aligned north-south and east-west. The positive Y direction points north and the positive X direction points east. Grounded cloud subdivisions are represented on the data tape by the impact coordinates of one central particle for each subdivision. The shape of each cloud subdivision is a square and the length of the side of this square at subdivision definition time is communicated to the Output Processor by the transport program via the parameter BZ on the grounded particles tape. Since central particles which fall within the distance, BZ/2, from the edge of the specified map limits will affect the map area, we must consider all particles falling within a rectangle which includes a margin of width BZ/2 on each side of the map. Figure 1 indicates both the map specified by the user (heavy rectangle) and the area of computational interest (the light rectangle surrounding the heavy one). Note that the symbology of Figure 1 corresponds to that of the FORTRAN programs.

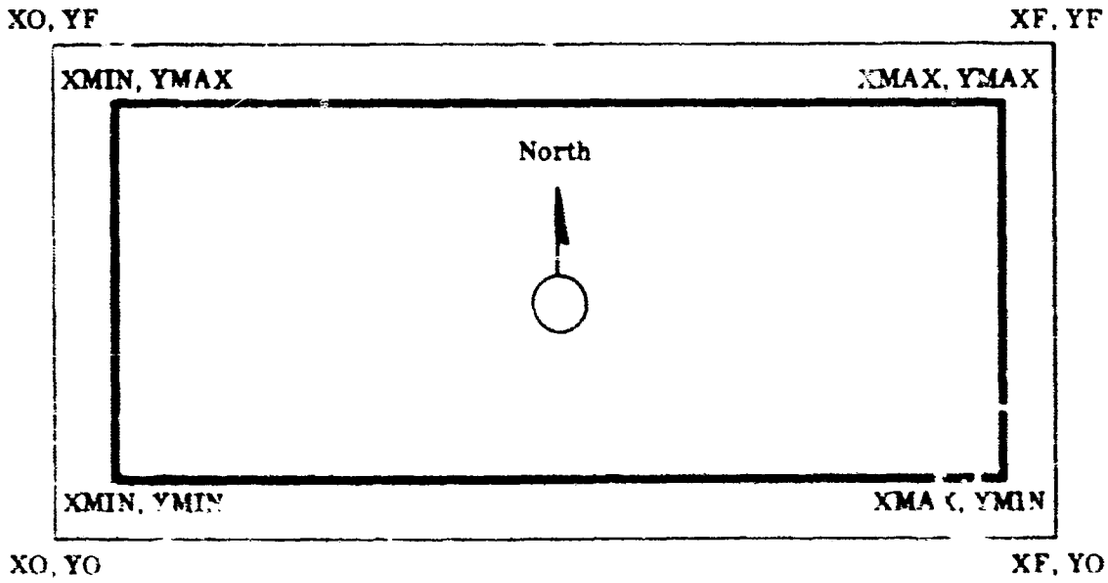

Figure 1. The Map Area Without Subdivision

The overall map area is subdivided into a grid according to the grid intervals specified by the user (as modified by the program if the undistorted map option is specified (see p. 7)). If the grid intervals specified by the user are such that the data for the entire map can be contained completely in the core storage map array, no further subdivision of the map area need be made. This is the situation represented by Figure 1. On the other hand, if either smaller grid intervals or a larger map (or both) are specified, the number of grid points in the complete map may be too large to fit in the map array at one time. In this situation subdivision of the kind shown in Figure 2 may be required. This type of subdividing is done automatically by the program without any guidance from the user. The shaded strips in Figure 2 represent buffer zones between map areas which must be used since cloud subdivisions falling near the boundary between map zones could otherwise affect more than one zone.* The region marked "Zone 1" will be treated as a first map and any particles falling into (or near) this zone will be immediately interpreted into the map array. Particles falling in the other marked zones (Zone 2, Zone 3, etc.) will be eventually written onto zone memory tapes for later interpretation into the map. However, since particles falling into the buffer zones affect more than one map area, they must be written onto more than one tape. The tape memory assignments of areas are indicated in Figure 2 by the overlapping arrows marked "Tape 1," "Tape 2," and "Tape 3." In the situation represented in this figure there will be, after the first map area is printed, effectively a one-to-one correspondence between subsequent map zones and tape memory data sources. A slight exception to this statement is brought about by the need to keep the right-hand buffer zone map area in the map array to account for the effect of Zone N particles on Zone N + 1.

Figure 2 also illustrates the meaning of the program variables X1, X2, X3, and X4 for the processing of the <u>second</u> map zone. X1, X2, X3, and X4 denote respectively the X coordinates of the left side of the left buffer zone, the right side of the left buffer zone, the left side of the right buffer zone, and the right side of the right buffer zone. These variables are set by the program prior to the start of processing on a new map zone. DELTAX, which is also illustrated, is a constant set the program on the basis of the required map dimensions and the size of the available map array.

*Buffer zones and map zones should not be confused with the printer strips into which a map zone is actually divided for printing and subsequent assembly. The maximum width of printer strips is fixed by the number of characters that the printer can print on one line.

If there were, for example, only two tapes available for sorting instead of the three illustrated in Figure 2, it would be necessary to use a tape as an overflow memory. In this situation the particles falling into Zones 3 and 4 would be written onto the overflow tape, and after the interpretation of the data on Tape 1, the program would return to re-sort the data on the overflow tape. The use of this overflow tape memory effectively makes the program entirely open-ended in regard to the size of the maps it can produce. At the same time the use of tape memory, when (but only when) it is required, should tend to make the program acceptably efficient for smaller tasks.

It is important to note that the "zones" depicted in Figure 2 should not be confused with the strips of printer paper that are attached side-by-side for direct contouring. (See the discussion on p. 16.) The number of paper strips produced is determined by the interrelation of the number of data points, the grid interval in the X direction, and the width of the printer line. In general there will be more than one strip for each zone.

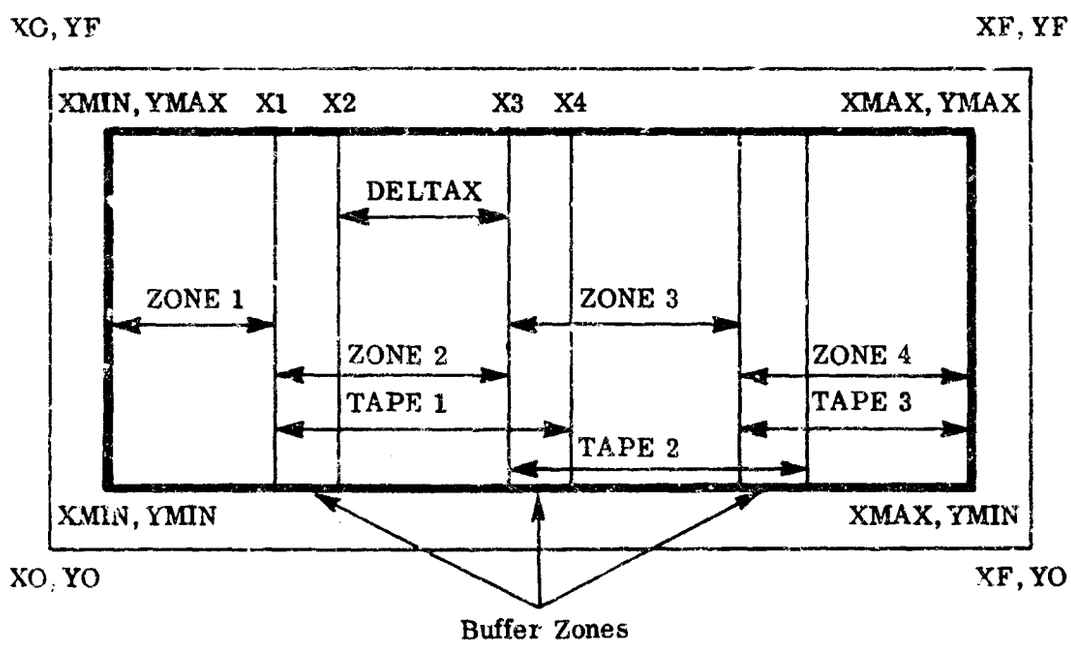

Figure 2. Map Area With Subdivision

AN ILLUSTRATION OF OUTPUT PROCESSOR USE

For the sake of illustration, let us assume that you as a researcher are preparing to make use of the Output Processor. How should you start and what should your strategy be?

It is suggested that the first things to be done in an unfamiliar prediction situation are to have the Output Processor print a hard copy of the grounded particles tape, and in addition, to call for a large-scale map to provide an overview of the fallout field. Both of these tasks can be carried out in the execution run that does the transporting. The grounded particles tape produced by the Transport Module and used by the Output Processor in the initial run may be saved and reused in subsequent runs of the Output Processor and Particle Activity Modules to produce any additional maps desired. In order to specify the first set of tasks the user must set about a dozen control parameter values. One parameter (IC(18) > 0, p.49) causes the grounded particles tape to be printed. Another (IC(17) = 0, p.49) causes processing to continue after that printing has been finished. Four others (XMIN, XMAX, YMIN, YMAX, p.49) give the coordinate limits of the desired map. Two others (DGX and DGY) give the map point grid intervals in the X and Y directions. One other specifies that the map should be, for example, a map of exposure rate "normalized" to H + 1 hour (NREQ = 2, p.51).

In the second and subsequent execution runs after the printed list of grounded particles and the large-scale map have become available, the user may request that any number of more detailed maps be printed. These larger and more precise maps can, of course, portray any of the possible output quantities of the DELFIC system.

Figure 3 illustrates how a user may arrange his requested map areas and scale factors to expose prediction details of interest to him. Area coverages and map dimensions shown are merely illustrations and in no sense are meant to imply any restrictions in the use of the Output Processor since their characteristics are completely under the control of the user. Map 1 is a large-scale overview that indicates the shape and location of the fallout field, but is necessarily crude because it is small in actual size (2 x 2 ft) and thus contains a small number of points. Maps 2, 3, and 4 represent much more precisely the predicted fallout field within 10 miles of ground zero. They are, for example, 6 x 6 ft in size and contain nine times as many data points as the overview (Map 1), but represent an area of the fallout field less than one tenth as large as the overview. They may, for instance, portray predictions of mass deposition,

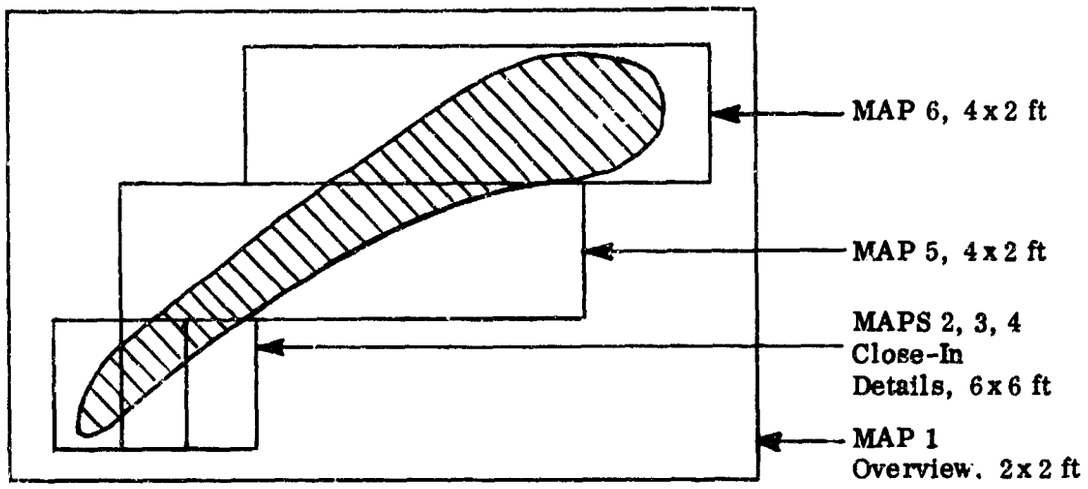

Figure 3. Map Coverage Example

exposure rate at H + 2 hours, and the concentration of mass chain 89. Maps 5 and 6 continue the representation of mass deposition but do so with less precision than that of Map 2 since they are about 4 ft long and cover larger fallout areas.

The task of arranging the card inputs to the Output Processor is not a complex one, but it does require that the user make certain decisions about what he wishes to have portrayed and how he wants it to be portrayed. He should know what coordinates were used to identify the location of ground zero within the transport module. He should know that all distances (coordinates) are measured in meters from the same coordinate origin. He should have at least a rough idea of the direction of the winds. Beyond that, he need only know which of the display options he wants to have portrayed. A card-by-card and parameter-by-parameter explanation of the input card deck for the Output Processor is given in the User Information section.

The map produced by the Output Processor will consist of a sequence of numbered "strips" of printer paper that can be detached at the boundaries between successive strips and assembled side-by-side into a single map of the overall area covered by the specified map limits. When so assembled (the strips are numbered in sequence from left to right) and hung on the wall for viewing, the data point with minimum X and minimum Y coordinates will be found in the lower left hand corner of the map (i.e., the lower left hand corner of strip number one). The coordinates of this point will be (XMIN + DGX, YMIN + DGY). This point need not be either the origin of coordinates or ground zero.

PROGRAM DETAILS

Control Program LINK8 (FC-2)

The purpose of LINK8 is to (1) initialize the Output Processor system, (2) print out an impacted particle list, and (3) call PAM1 of the Particle Activity Module. (See Volume V of this documentation.)

Upon entrance, LINK8 first sets a number of program constants which denote such things as the logical identifiers of certain essential tapes and the maximum sizes of certain arrays. When installing the Output Processor at a new computation center or on a new computer system, it is essential that the system tape identifiers be checked to see that they conform to established requirements. Note, however, that changing the tape number assignments at the beginning of LINK8 will suffice for all programs of the Output Processor since all tape references have been made via established tape names, e.g., ISIN, ISOUT, IPOUT.

In a similar way, whenever it becomes possible to run the Output Processor on a computer that has a high speed memory larger than 32,768 words, adjustments should be made to the sizes of certain arrays within the program. If a larger memory is available, the programs will, of course, function correctly without adjustment, but improved program efficiency can be easily attained if adjustments are made. If the program must be run in a smaller segment of memory than it now uses, only a few simple adjustments must be made in order to scale down the program, but program efficiency will necessarily suffer. The program array OMAP and the companion array size variable NMAP may, for instance, be adjusted downward (or upward) together to change the size of the usable map array. Changing the OMAP dimension statement, and the statement which sets the value of NMAP, is all that one needs to do since all usage of the map array is based on the parameter NMAP. Of course, the new size of the OMAP array as specified in the dimension statement and the value of NMAP should coincide, and all Output Processor programs should be recompiled (with adjustments made to all dimension card decks).

After parameter setting, LINK8 attempts to check the identification of the grounded particles tape, and if successful, it proceeds to read and record all previous identifier records that are on that tape. Next, particle size frequency

distribution data are read into memory from the grounded particles tape. This is followed by a list of identifiers of tapes available for use in sorting which is read from the system input tape. A partial check is then made to remove from this list any inadvertant references to system tapes or the grounded particles tape. A duplicate copy of the corrected list is stored in the array IIT(J) for eventual reconstruction of the entrance condition. Next, the overall control array IC(J) is read and a branch is made on the value of IC(18) which indicates whether or not a hard copy of the grounded particles tape is desired at this time. After producing a hard copy of the grounded particles tape, a test of IC(17) indicates whether or not further processing is desired, and if it is, the program execution proceeds to statement number 5111.

At statement 5111 printer character spacing data (IH and IV) are read and a title page is written onto the system output tape. Then control is passed to subroutine PAM1 of the Particle Activity Module where occurs: (1) sorting and editing of nuclear transitions and decay subchain data, (2) computation of Freiling F_R factors, and (3) computation of part 1 of the induced activity contribution. Upon return from PAM1, control is transferred to LINK9.

Control Program LINK9 (FC-3)

Under the control of program LINK9 of the Output Processor, output maps are prepared and printed and subroutine PAM2 of the Particle Activity Module is called as needed to compute particle activities or specific mass chain concentrations (see Volume V). At statement 119 a sum of map ordinates is printed if one was computed earlier. At statement 1191 a specification of the limiting coordinates, grid intervals, and surface roughness factor of a desired map are read. If the surface roughness factor is input as zero, it is set to 1.0. The sum of the grid intervals is tested for zero as a termination condition. This is the correct exit condition and leads to an on-line printer comment for the notification of the computer operators.

If acceptable grid intervals are specified, the local control array JC(J) is read, parameters are set for the processing request loop, and a test is made on the printer description parameters IV and IH.

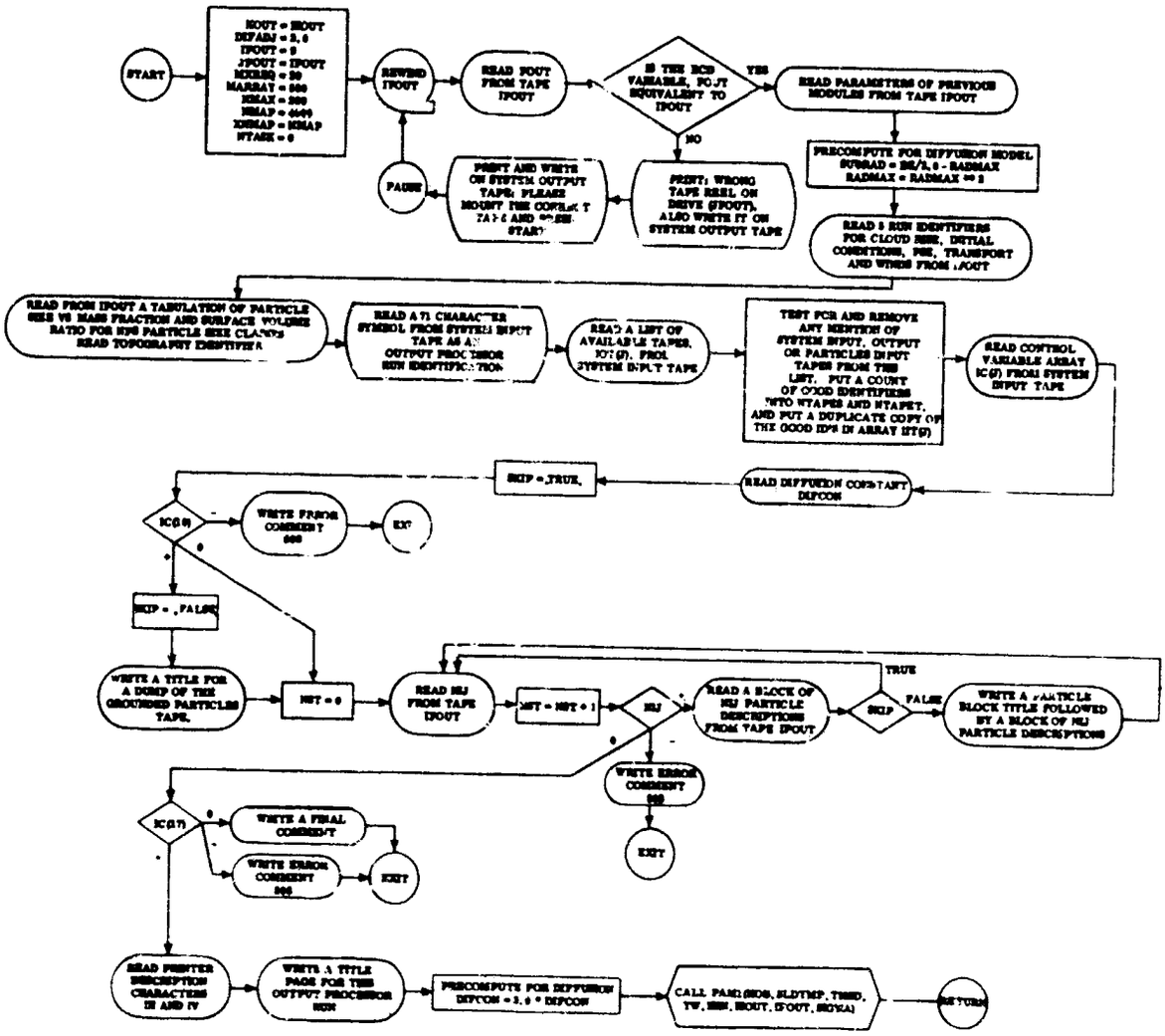

FC-2. Main Program LINK8

Statement 1211 is a return point where a special terminal record is put onto the multiple burst tape if one is in use. At 1209 the sum of map coordinates is printed if it has not been printed previously. At statement 1219 we enter the processing request loop and read a request in the form NREQ, T1, T2, MASCHN. After input checking and loop initialization, a test is made on NREQ for the exit condition (NREQ = 0) which leads to a return to the processing loop at statement 119. If a valid request number is encountered, tape IPOUT is repositioned so that the next read statement can bring in grounded particle data; a request title page is written, and entrance parameters are set for both the Output Processor and subroutine PAM2. If JC(18) and JC(16) so indicate, an adjustment of grid intervals is made so that an undistorted map will be produced, but if an undistorted map is not required and small grid interval adjustments are permitted, a transfer to 1301 is made so that small adjustments can be made to the grid intervals to yield a more rapid program execution.

At statement 140 final grid intervals have been arrived at and the width of the buffer zones is set equal to the width of an integral number of grid intervals. Computations are then made of the numbers of grid points covered by the map in its two principal directions. NZ, the number of memory map zones, is also computed here. NZ is one less than the total number of zones into which the map must be divided so that it can be produced within the available map array. Next, NOX, the number of map grid intervals between buffer zones, and DELTAX, the distance between buffer zones, are computed for later use. Then, if grid interval adjustments were made, a record is made as part of the program's printed output.

At statement 1405 more initialization is performed. At 300, parameters MIN, JIN, and LAST are set on the basis of the number of available tape units. If NZ is zero, only one map area must be computed, i.e., all of the required map will fit within the map array at one time. Note that a single pass through RUN1 and MAP is required. Return is made to 1211 which leads to the reading of the next request. If NZ is positive but less than the number of tapes available, a single sorting pass followed by a sequence of single area interpretations is called for. Also, subroutine LETSGO is called to process the first map area and sort the remaining particle data onto available tapes. Then a loop which calls SLIDE, RUN1,

and MAP is executed to interpret the sorted data and complete the printed map. This time return is also made to 1211 for the next request. If NZ is greater than the number of available tapes, more than one sort pass is required. Again LETSGO interprets the first map area, sorts data for a number of other adjoining areas, and writes the remaining data onto a separate overflow tape for subsequent sorting. Return in this case is made to statement 300 so that a second sort of the overflow tape may be carried out. Eventually, a return for the next request will be made via one of the previously mentioned transfers to statement 1211.

Subroutine CALC (FC-4)

The purpose of this subroutine is to interpret a cloud subdivision into the map array OMAP. This interpretation consists of first the selection of the appropriate computation code which is shown on the flow chart as the branching operation based on the value of the parameter NREQ.

After the branch, a map ordinate increment is computed and stored in the variable F. Next, starting at statement number 100, CALC computes appropriate storage indices for the control of the program loops which actually carry out the map array incrementing operation.

Last the increment F is added to, or compared with, the content of the selected map array points by means of the two nested FORTRAN do loops starting just beyond statement number 19.

It should be noted that code insertion points have been provided within the computation selection branching operation so that new computational options may be easily added to the program. To insert the first new code one need only make sure that the code insert begins with statement number 109 and ends with the statement "Go to 100." The user must put the insert in the place of the card "109 CONTINUE" and then recompile subroutine CALC. Of course, the insert must not contain any statement numbers previously used within CALC.

Some explanation of the procedure used to compute the storage control indices is called for since this procedure is somewhat involved and very central to the Output Processor. As noted previously, the basic shape of the cloud subdivision in plan view is a square. The length of the side of this square is communicated to

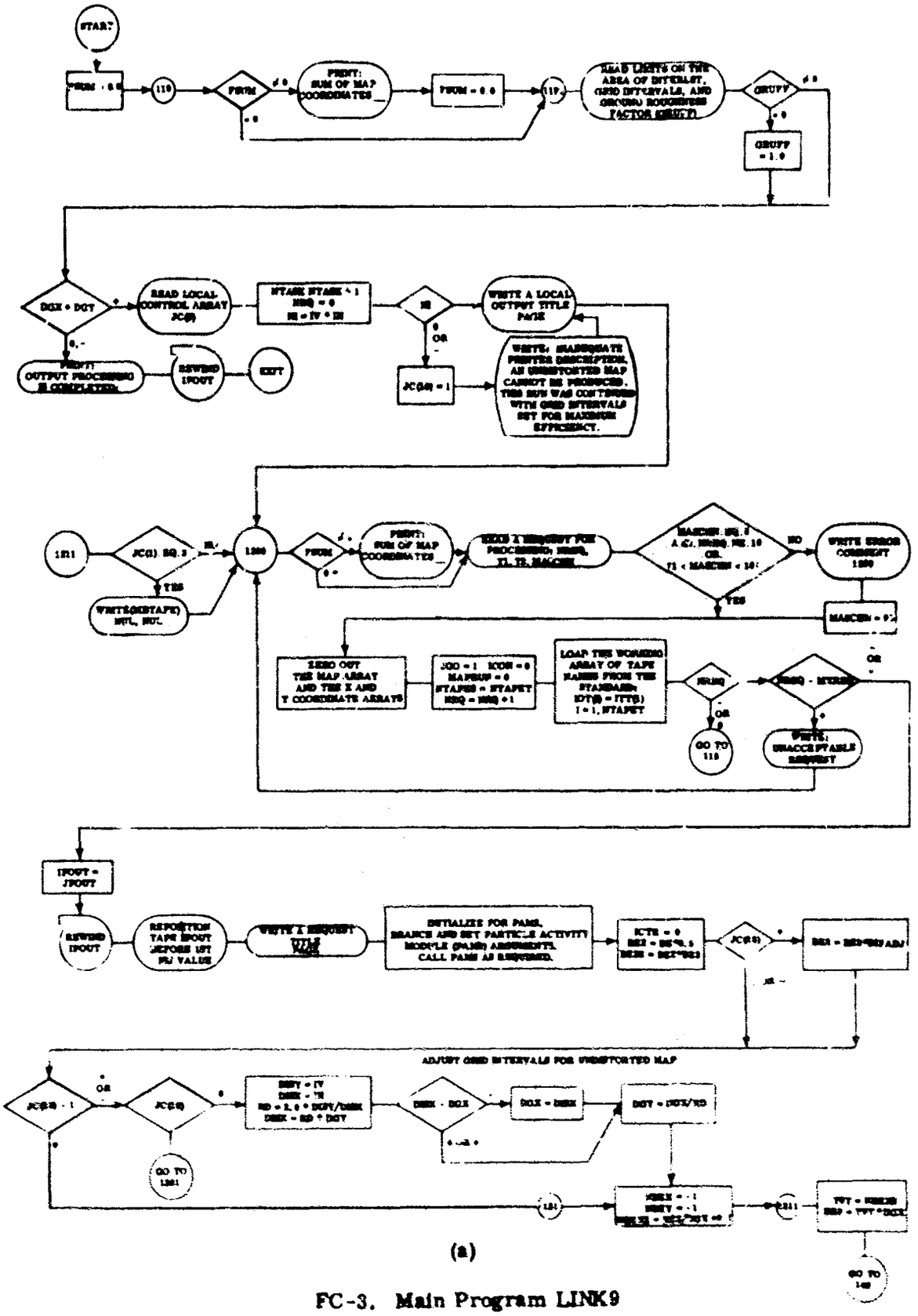

(a)

FC-3. Main Program LINK9

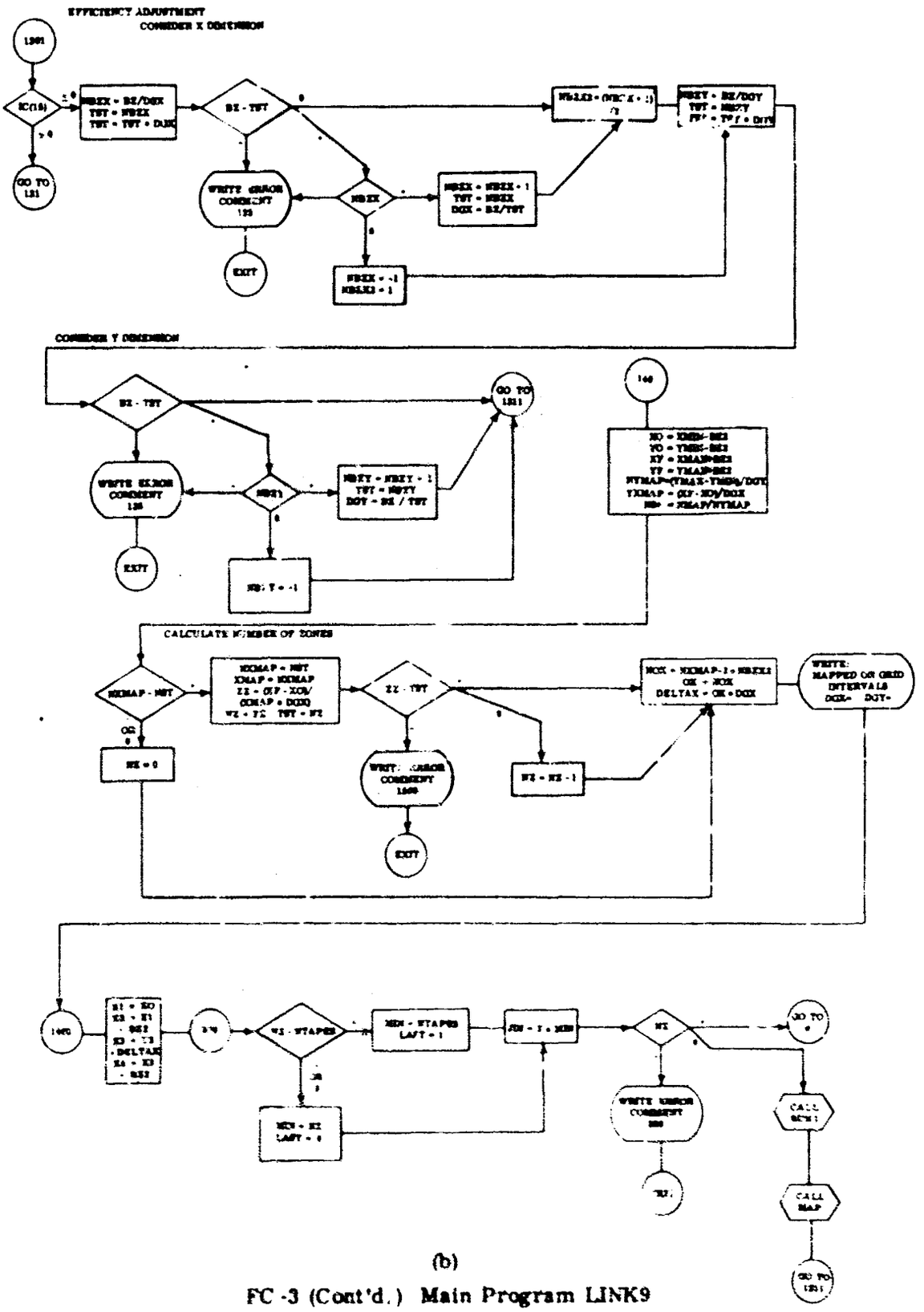

(b)

FC -3 (Cont'd.) Main Program LINK9

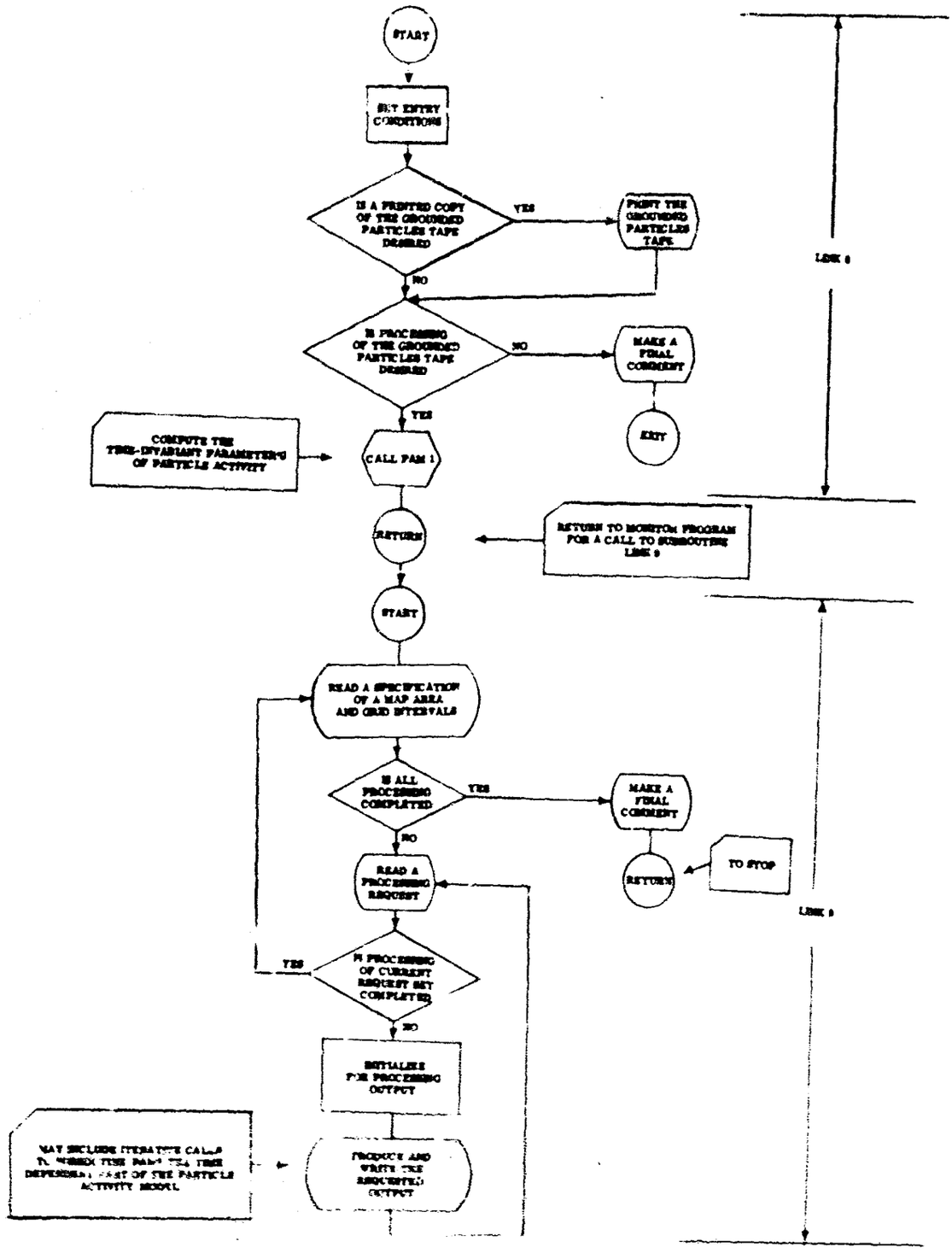

(c)

FC-3 (Cont'd.) Main Program LINK9

the Output Processor and to subroutine CALC in the parameter BZ. The procedure under discussion begins at statement number 100 with the calculation of the coordinates of the corners of the grounded cloud subdivision square. These coordinates are stored in the variables WXL, WXR, WYB, WYT. Any map grid point which lies within this square will have the quantity F added to its value. Next, the procedure computes NOL, the X index of the grid point which lies just to the right of the square's left boundary, and JX, the X index of the point which lies just to the right of the square's right boundary. NWX, the difference between these two indices, indicates how many grid points are to be incremented in the X direction. The result of this subtraction may be zero, in which case no grid point will be incremented by CALC. A similar treatment is given to the Y dimension, and the final set of results is stored in the variables NOL and NWX for the X direction, and NOB and NWY in the Y direction.

At statement number 19, loop control variables K, MM, and NN are computed in order to bridge the logical gap between the previously computed two-dimensional indices such as NOL and the one-dimensional array in which the map ordinates are really stored.

Certain complexities are added to the foregoing by the grid interval adjustment options which are available and by the need to correctly handle boundary-effects situations in which a cloud subdivision falls partially off the map area. The details of these treatments are provided by the program listings.

Subroutine COUNT (FC-5)

This subroutine selects the currently largest sorted and identified set of particle descriptions for dumping onto an external (tape) memory device. In making this selection use is made of the particle counter array, NP( ), in which NP(J) for even J contains the count of the number of cloud subdivision central particles that have fallen into the J/2th map zone (exclusive of adjoining buffer zones). The NP(J-1) and NP(J + 1) for even J contain the counts of central particles falling into the buffer zones to the left and right (west and east) of the Jth interbuffer map zone. In general, MAX(NP(J)) for even J represents the maximum number of particle descriptions that can be actually removed from the particle arrays by a single dumping operation.

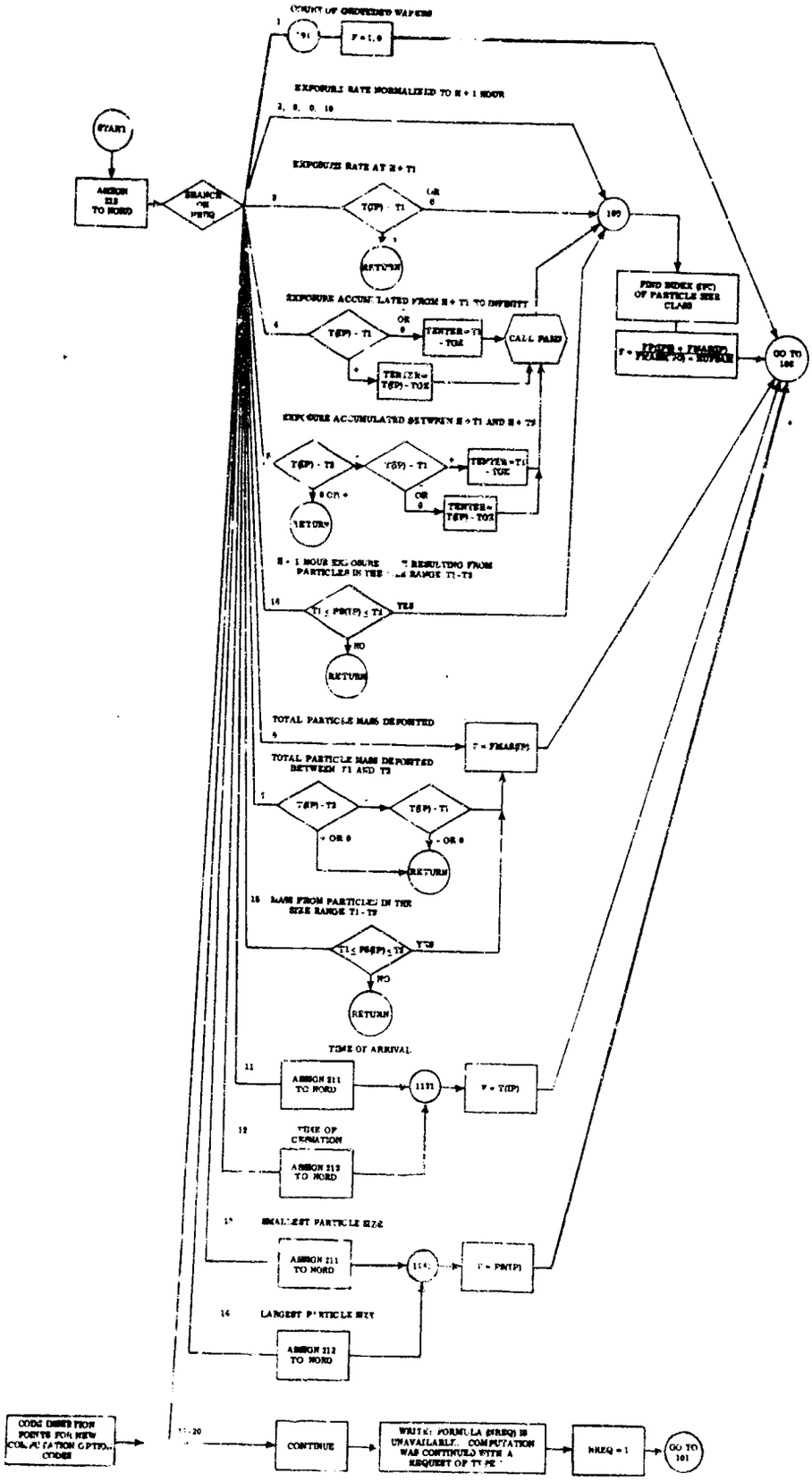

(a)

FC-4. Subroutine CALC

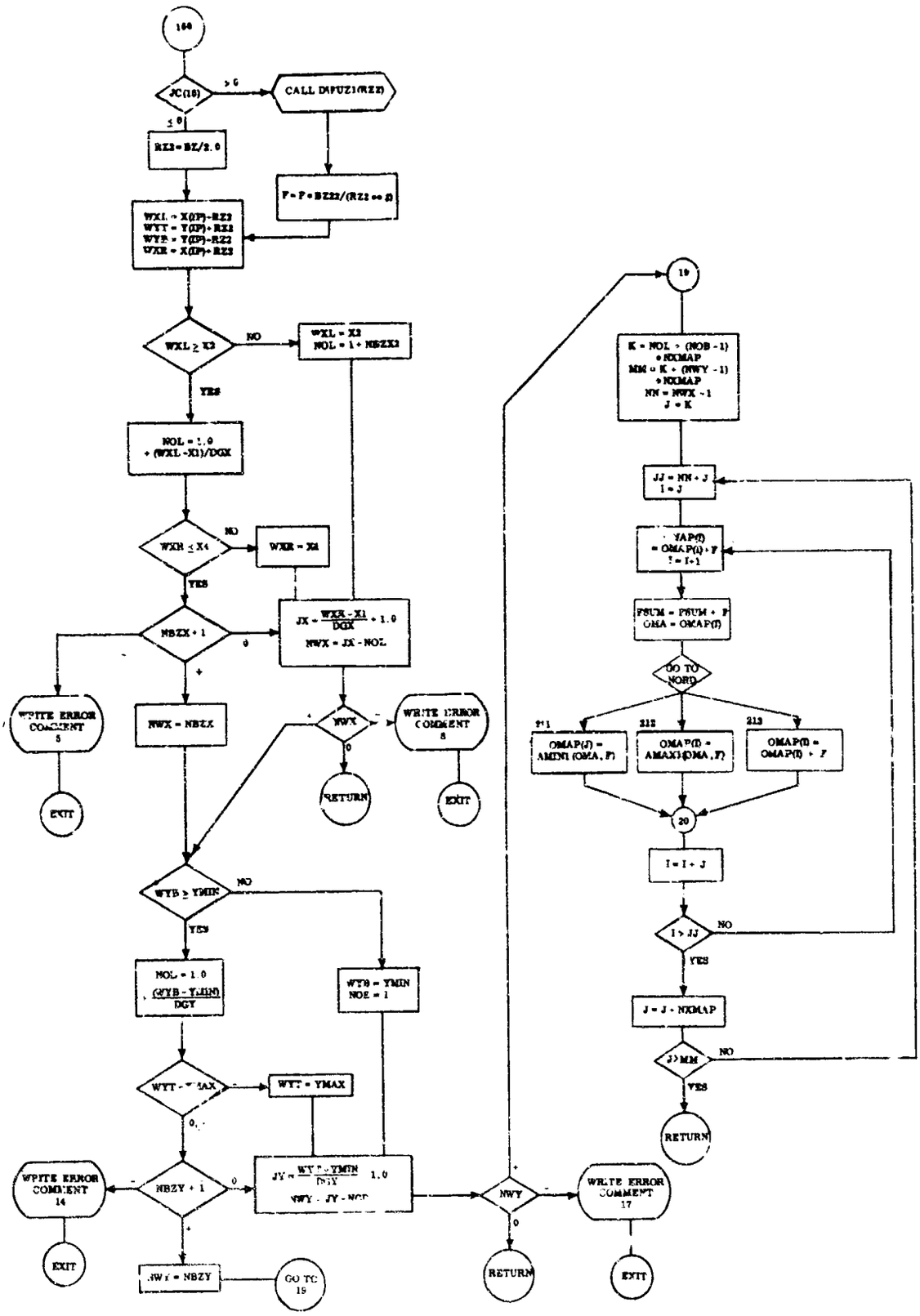

(b)

FC-4 (Cont'd.) Subroutine CALC

Since cloud subdivisions whose central particles fall into a buffer zone affect the two map zones on either side, it is necessary to dump buffer zone particles along with the particles from the surrounding map zones. However, buffer zone particle descriptions must also remain in memory, since they also affect some other map zone. (The subroutine shift reidentifies these duplicate particle descriptions by changing their classifications as recorded in the KTR( ) array in order to avoid double counting later.) In general, the number of particle descriptions which will actually be dumped onto memory tape exceeds MAX(NP(J) for even J) by NP(J - 1) + NP(J + 1). A slight exception, however, must be made for the first map zone since the left-reaching effects of the particles in its left buffer zone have already been taken into account (in the in-core map array) and, therefore, the particles falling into its left buffer zone need not be duplicated.

After selecting MAX [NP(J) for even J, NP(1) + NP(2)], subroutine COUNT adds the appropriate buffer zone counters to compute the number of particle descriptions to be dumped and puts the result in parameter NS. Next it sets the parameter KTAPE equal to the identification number of the tape on which the forthcoming dump operation (subroutine SHIFT) should write and then returns.

Subroutine CRDP (FC-6)

The purpose of subroutine CRDP (core dump) is to empty the particle arrays of all particle descriptions except those that can be processed into the next load of the map array, OMAP( ). CRDP is actually a control program, since it uses subroutine SHIFT to do the writing of sets of particle descriptions onto appropriate map zone memory tapes. (SHIFT does not actually clear (store zeros in) all words of each affected particle description in the particle arrays, but merely sets the appropriate KTR(J) entries to zero to indicate that the Jth lines in the particle arrays are available for reuse.) CRDP also makes the adjustments required to keep the particle counter array NP( ) current. It should be noted that CRDP does not dump the descriptions of particles falling into the first sort zone (J = 2) onto tape. These particles are left in the memory array for immediate processing into the next printed map zone. Note also that CRDP writes a final zero on each sort tape as an indication of the end of the data on the tape.

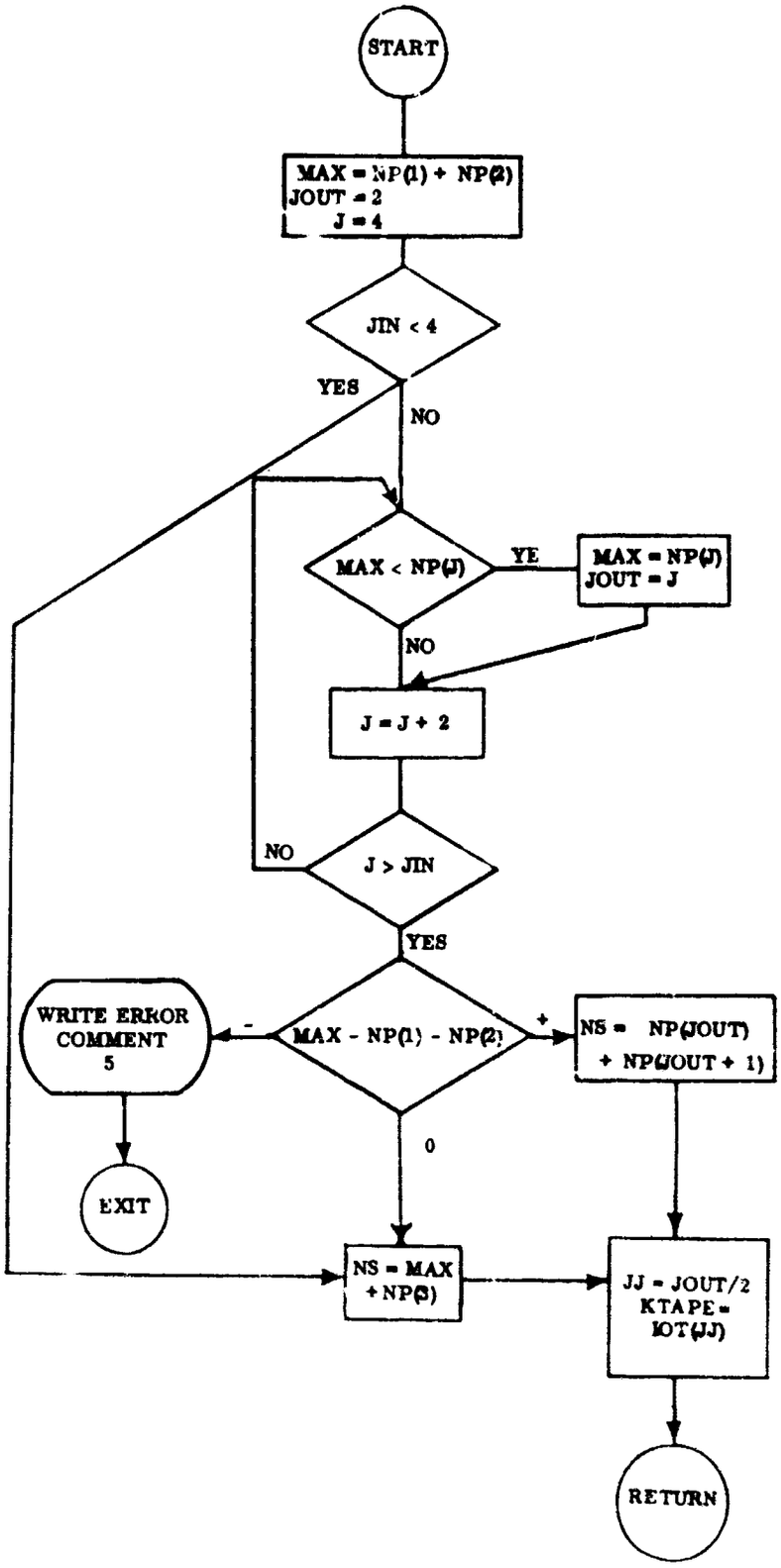

FC-5. Subroutine COUNT

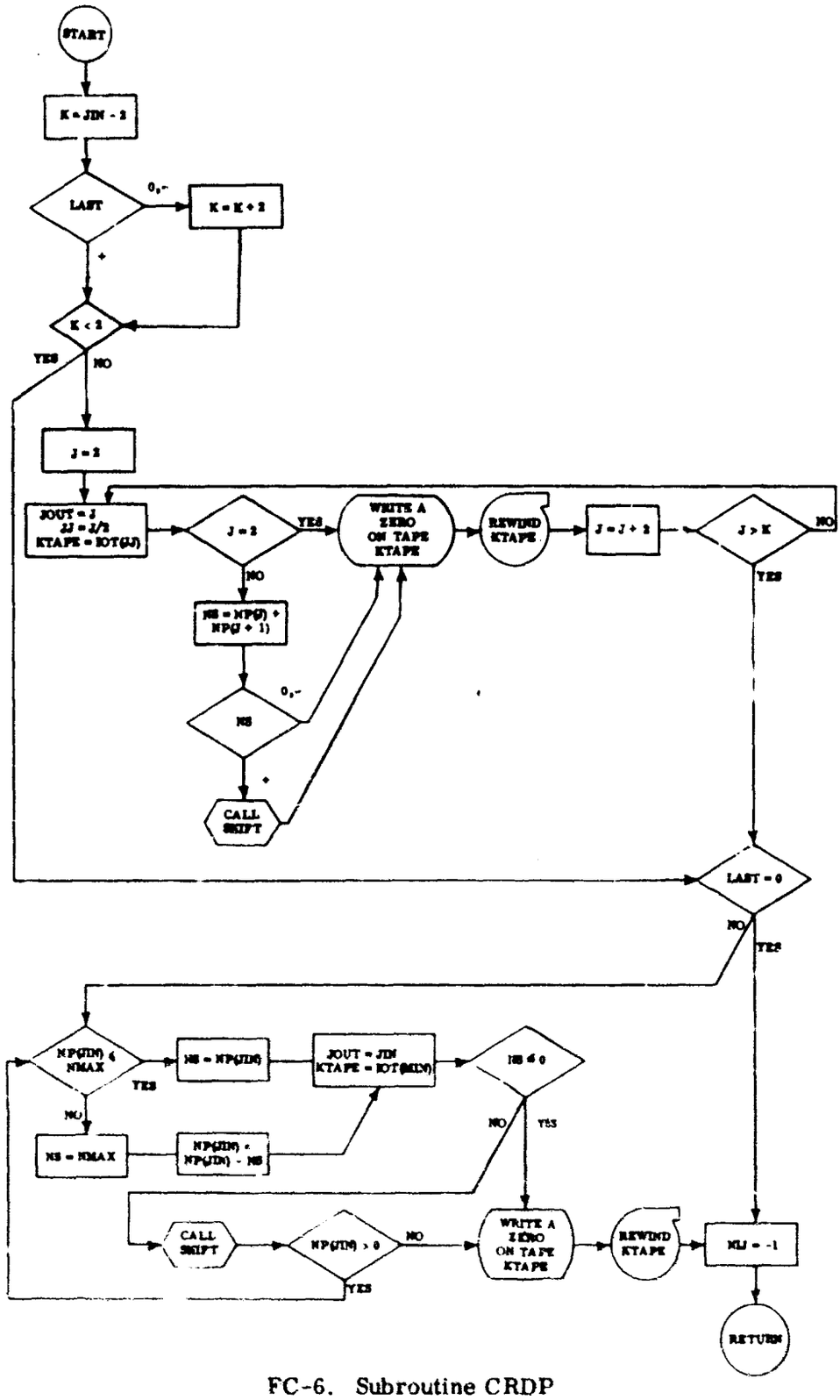

FC-6. Subroutine CRDP

Subroutine LETSGO (FC-7)

This subroutine, like RUN1, is a specialized executive program, but it may call subroutines COUNT, PROC, SHIFT, and ZERO. It is used only when the data on the current input tape must be sorted because the required output map is too large to fit completely into high speed memory at one time. LETSGO first sets NE, the counter of empty lines in the particle arrays, at the full size of the arrays, and then clears the zone counters NP(I) and the particle zone indicators KTR(I). Next, it reads a particle block count NIJ and tests NIJ for the termination condition (NIJ = 0). In the event of termination CRDP is called to see that the content of the particle array is written out onto the appropriate tape (if required). If NIJ is positive, other tests are performed and, if necessary, COUNT and SHIFT are called to make room for the incoming data block. Thereafter, except for the first pass, ZERO is called to group the number of empty particle array lines required for the incoming particle block.

The particle block is then read into the computer and subroutine PROC is called to process the particle (or cloud subdivision) data. This processing consists of determining which numbered map zone or buffer zone the central particle falls into and recording that zone's identification number in the central particle's zone indicator parameter KTR( ). At this time PROC also uses CALC to process into the map array OMAP( ) all those central particles that affect the map area currently being evaluated.

Subroutine MAP (FC-8)

This subroutine writes complete fallout maps on the system output tape ISOUT for batch-printing. It writes a map title, a description of what quantity the map portrays, and an indication of the map's style of presentation (format). It divides the output map into printer strips on the basis of the printer width parameter INC. It prints a strip count (MAPRUN) at the top of each strip for identification purposes. Since an individual map may consist of more than one map array full of data, it is necessary that MAP operate correctly, even if an individual map must be produced by a sequence of calls to MAP. This feature is facilitated by the parameter MAPRUN, which is zero at the time of the initial call of subroutine MAP and is positive thereafter.

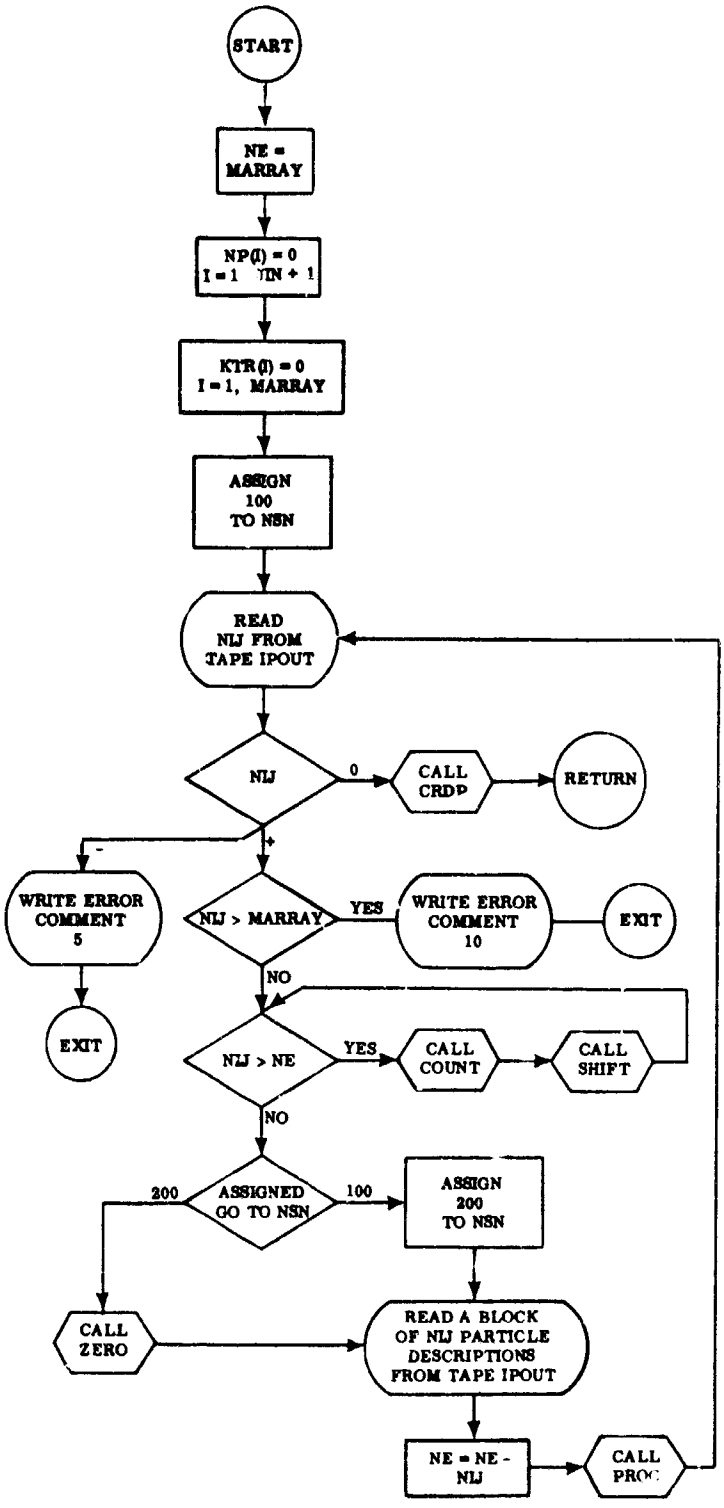

FC-7. Subroutine LETSGO

Following the detailed flow chart of subroutine MAP, we see at the beginning a transfer on the basis of MAPRUN to a first-pass code if MAPRUN equals zero. In this first-pass code parameter initializations are performed, a map title is written, the display option control parameter, JC(1), is checked for an acceptable value, and then a branch transfer is made to a code that writes the presentation style title and makes control transfer assignments within the map writing loops.

Between the statement numbers 102 and 170 a two-part title describing the quantity presented in the map is written. Between statement numbers 170 and P_1 initializations are made for the three nested map writing loops. At the time when P_1 is first reached M contains the number of printer strips that are to be produced, and LEFT has the number of columns that should appear on the last printer strip.

At P_1, which is the return point for the outer map writing loop (printer strip loop), MAPRUN, the counter of printer strips, is incremented and strip title is written. Also, KL, the lower index for retrieval from the one-dimensional map array OMAP, is set at its initial value. Note that in the iteration KL progresses from its largest value to its smallest value to invert the map which is stored numerically inverted in the map array.

At P_2, the return point for the middle map writing loop (printer line loop), KH, the upper index for retrieval from the map array, is set and KDC, an index for the printer line integer array JMAP, is initialized.

At P_3, the return point for the last map writing loop (data point loop), KDC is incremented and a transfer is made to the desired presentation code on the basis of previous assignment. The two furnished printer display codes take their inputs from the map array and place their results back into the map array and into the integer printer line array JMAP. All map producing codes return to statement number 300.

Below 300 the printer lines are written onto the output tape, suitable indexing operations are performed, and return is made to deal with either the next line in the current strip or the first line (and title) on the next strip, or a final return is made to the calling program. Note that if entrance is made to MAP with MAPRUN set positive as a consequence of a previous entrance, the overall titles will not be printed again and strip counting will be resumed where it had been left off.

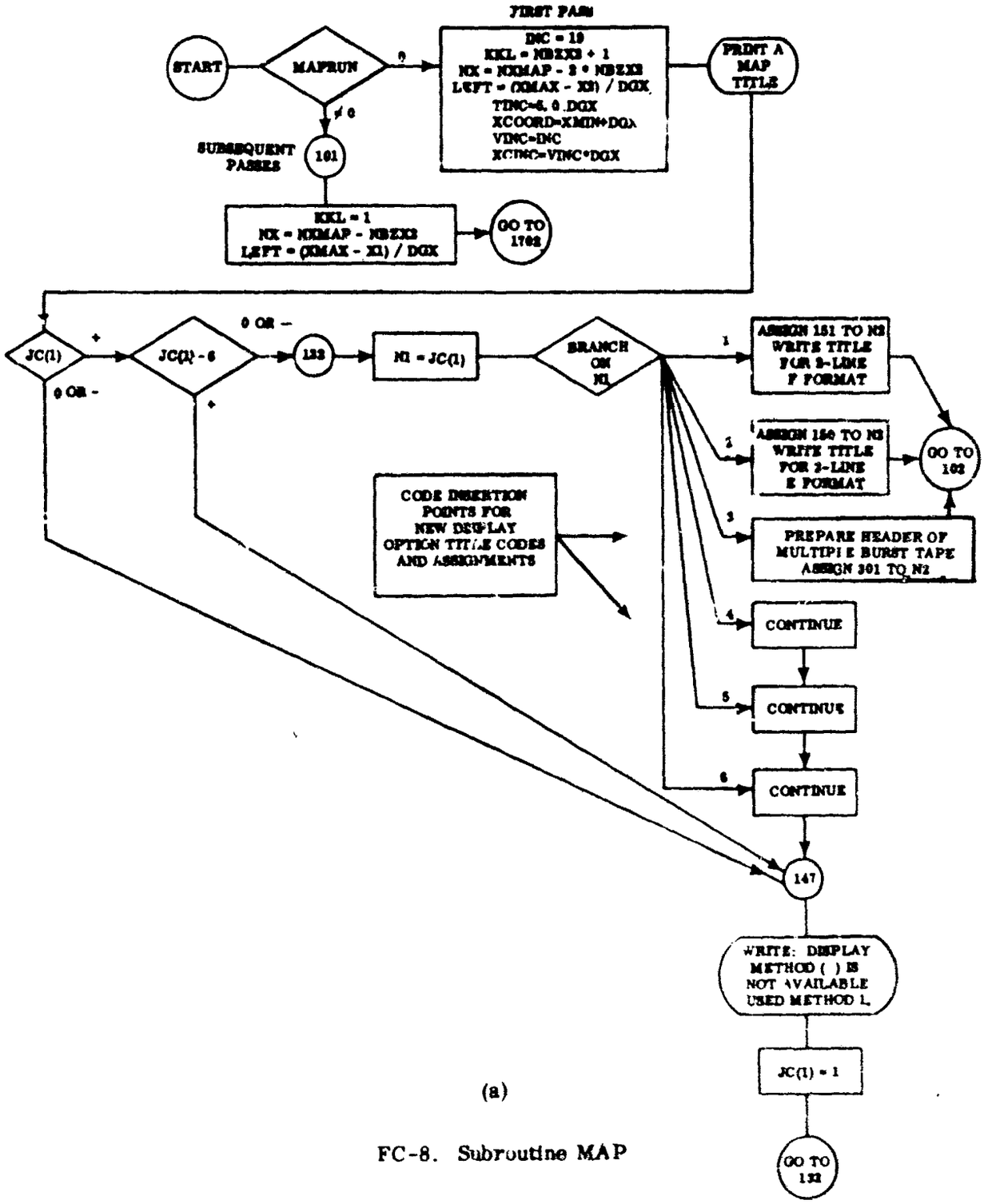

(a)

FC-8. Subroutine MAP

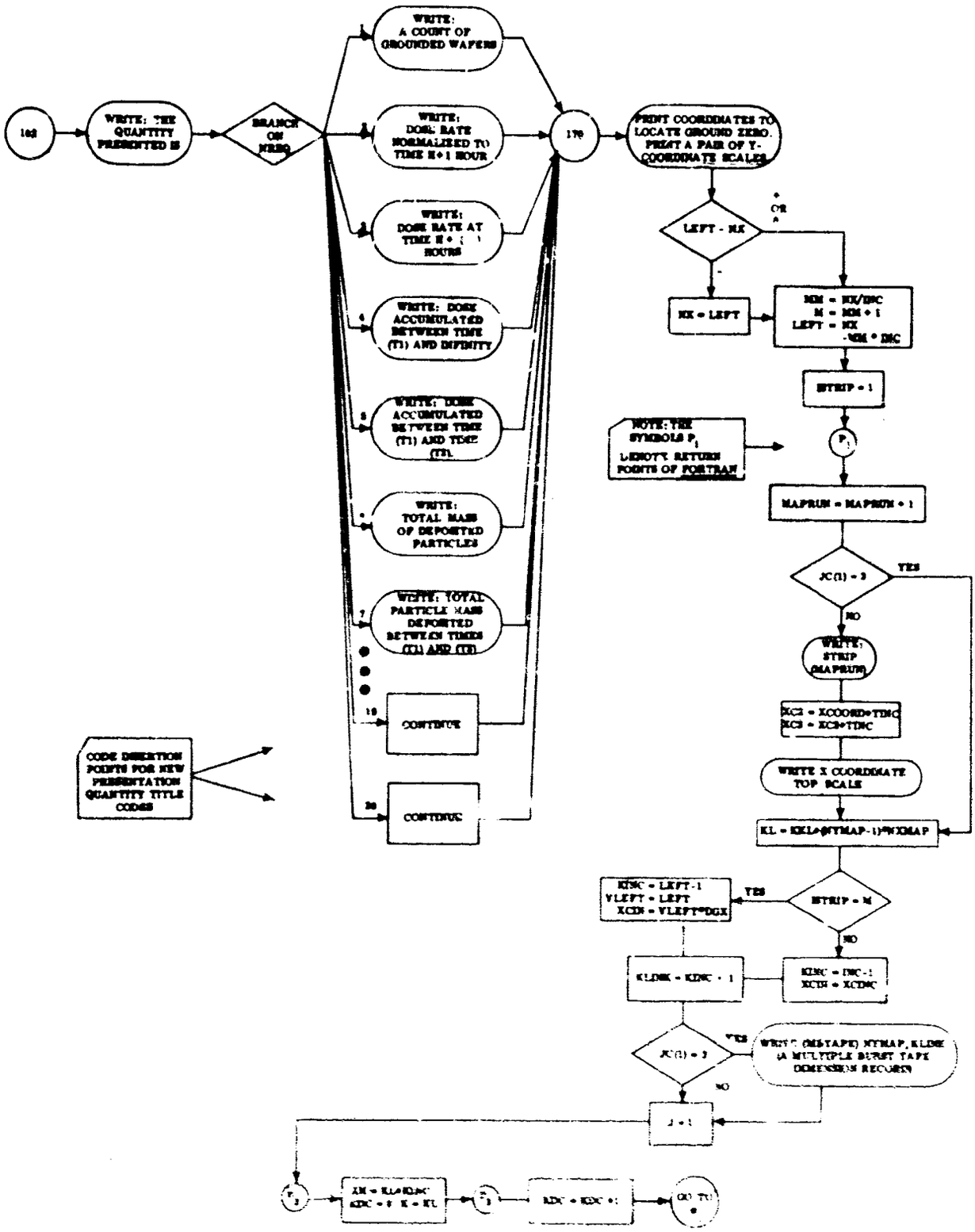

(b)

FC-8 (Cont'd.) Subroutine MAP

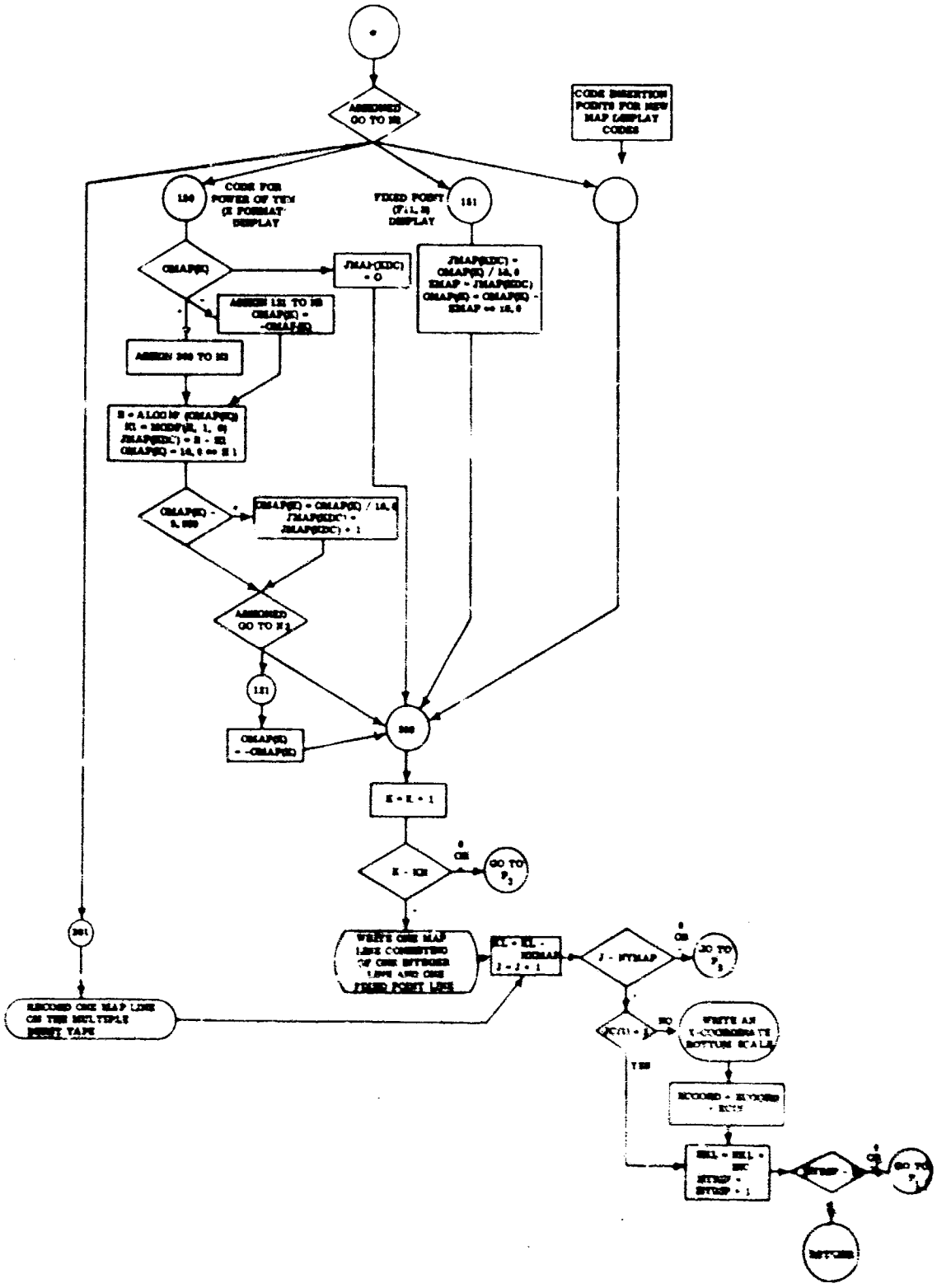

(c)

FC-8 (Cont'd.) Subroutine MAP

Subroutine PROC (FC-9)

This subroutine is called by LETSGO to sort (classify) particle descriptions, and it calls CALC to actually interpret into the map array those particles which affect the current map image. If the value of ICTR is zero upon entrance, a transfer is made to a code which discards particle descriptions that fall outside the user's area of interest and consolidates those remaining at the top of the particle array. If ICTR is not zero, this code is bypassed and a transfer is made immediately to a code which assigns values to the KTR array for those particle descriptions which cannot be immediately interpreted into the map array, and CALC is called to interpret those remaining.

The value assigned to the KTR for each particle description indicates into which map zone or buffer zone the particle has fallen. This value is computed by the loop beginning at the point labeled α where the east-west distance between the particle position and XO, the eastern boundary of the extended area of interest (see Figure 2) is computed and stored in R. Thereafter, the program determines the classification parameter KTR for each particle by alternately subtracting the width of a buffer zone (BZ2), and the width of a map zone exclusive of buffer zones (DELTAX), from R, and performing a test against zero after each subtraction. While this loop of subtractions is being carried out, the parameter J is used to record the number of the map zone counter array element pertinent to the particle. Note, however, that central particles falling into the area of the in-core map array can be processed immediately into the map array by a call to CALC and, therefore, need not be stored permanently in the particle arrays. Thus, their classifications need not be stored in their KTR(J) which remain zero. It should also be noted that the indexing of the counter array NP( ) is offset by two from the classification index J. This leads to a usage of NP(J) as the counter for the number of central particles falling into the first buffer zone to the right of the first printed map area, and NP(2) as the counter for the first map zone to the right of the first printed map, and so forth.

Subroutine RUN1 (FC-10)

This subroutine is a specialized executive program which calls only subroutine CALC. It is used in the situation where only one pass of the input data tape is required in order to fully account for the data on the tape. This situation arises either

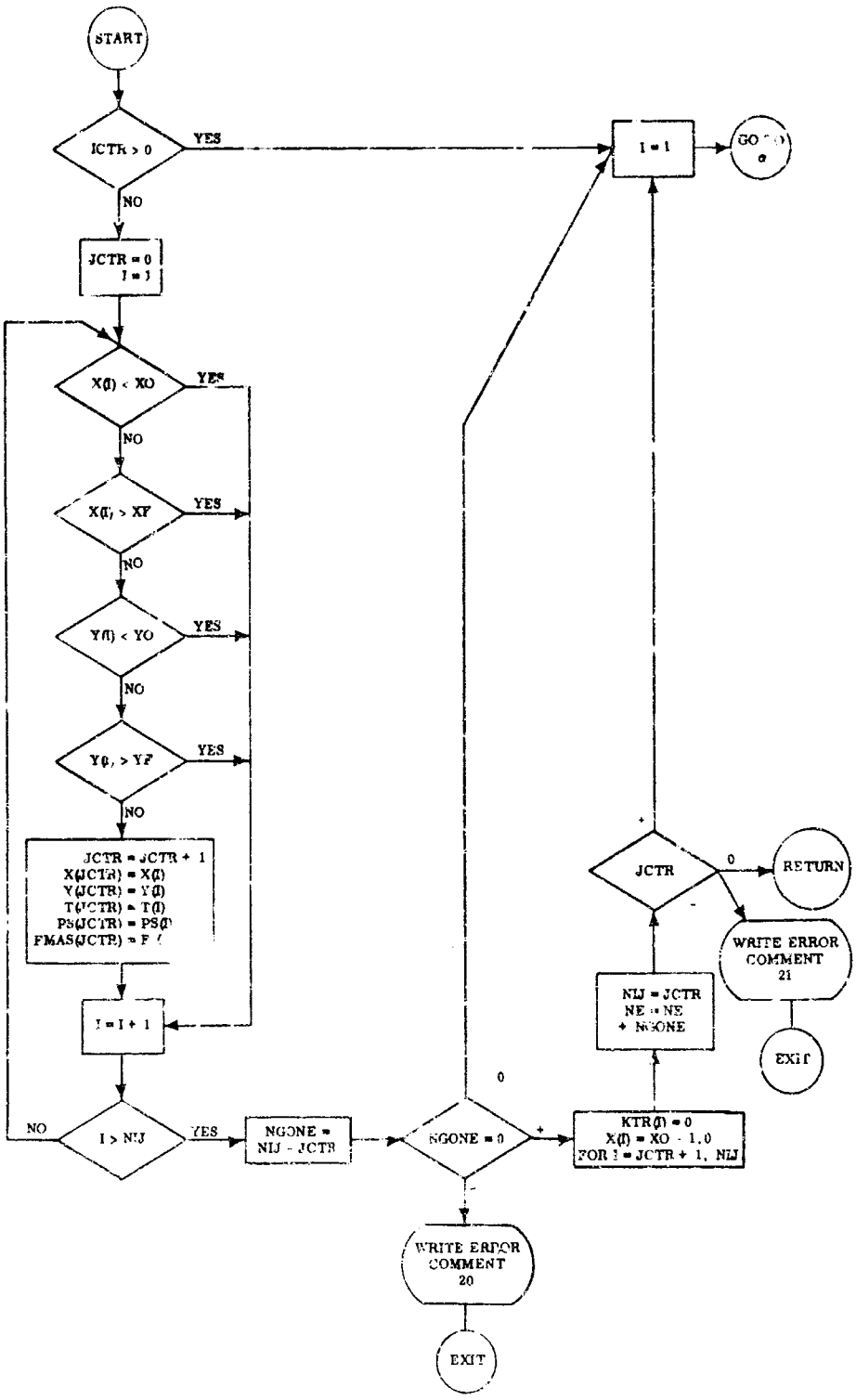

(a)

FC-9. Subroutine PROC

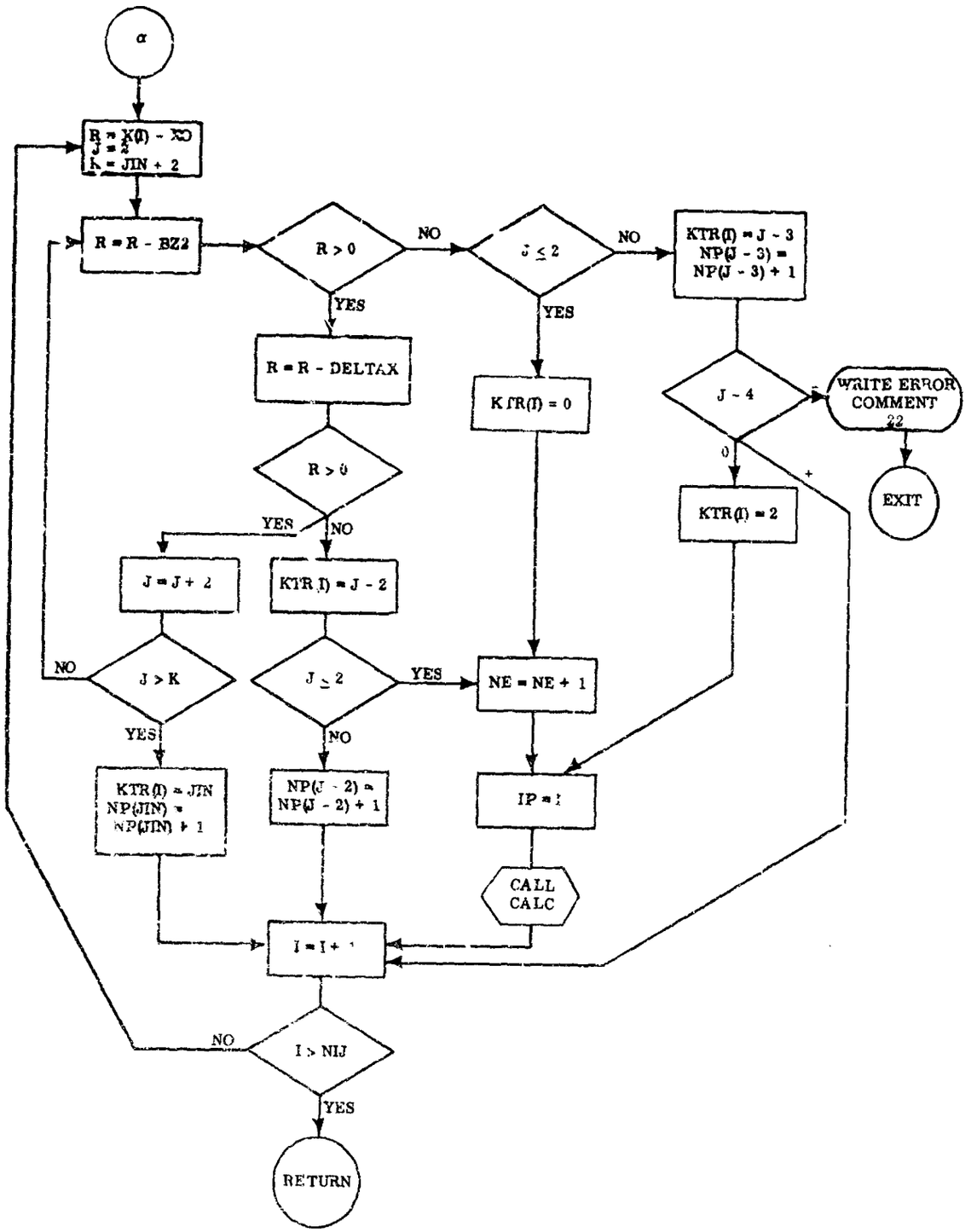

(b)

FC-9 (Cont'd.) Subroutine PROC

when all of the required map will fit within the map array at one time or when a previously sorted input data tape is being processed. In the first case each input coordinate point must be checked to see if its associated cloud subdivision affects the map. If not, the impact point is not interpreted into the map. In the second case, when a prior sorting operation guarantees that only necessary particle descriptions are on the input tape, this detailed checking procedure is bypassed.

Subroutine SHIFT (FC-11)

The basic function of this subroutine is to collect into the top of the particle arrays NS, particle descriptions of the selected class (those having their KTR variable equal to JOUT) and then write them onto the appropriate tape (KTAPE). Adjustments are made to the count of the number of members in the selected class, to NE, to the count of available lines in the particle arrays, and to the KTR variables of those particle descriptions which are read out onto tape either for the first or second time, in accordance with the need to duplicate descriptions of particles that fall into buffer zones.

The actual sort procedure is one which usually moves only the minimum amount of information and, at worst, a temporary description storage may be used once (for one description) during each execution of SHIFT. In this procedure JT is an index that proceeds from the top of the arrays (JT = 1) toward the bottom, and JB proceeds from the bottom toward the top. The program first examines the top line to determine if it is a member of the class to be dumped (KTR(JT) = JOUT). If it is, it is left in place with its KTR set to zero, and then the top index JT is incremented so that the next line can be considered. If the top line is empty (KTR(JT) = 0), the program goes to the bottom of the array, using index JB to try to find a particle which is to be dumped and thus can be moved into the empty line, JT. If, on the other hand, the top line contains a particle description that is not to be dumped, the program goes to the bottom of the array to seek an available line to which the top particle can be moved. In this general way the program proceeds by skipping particles to be dumped when they are found in the top, moving particles to be dumped to the top when they are found in the bottom, and moving particles that are not to be dumped from the top to the bottom. The sorting stops when NS particles of the class to be dumped have been collected into contiguous cells in the top of the particle arrays.

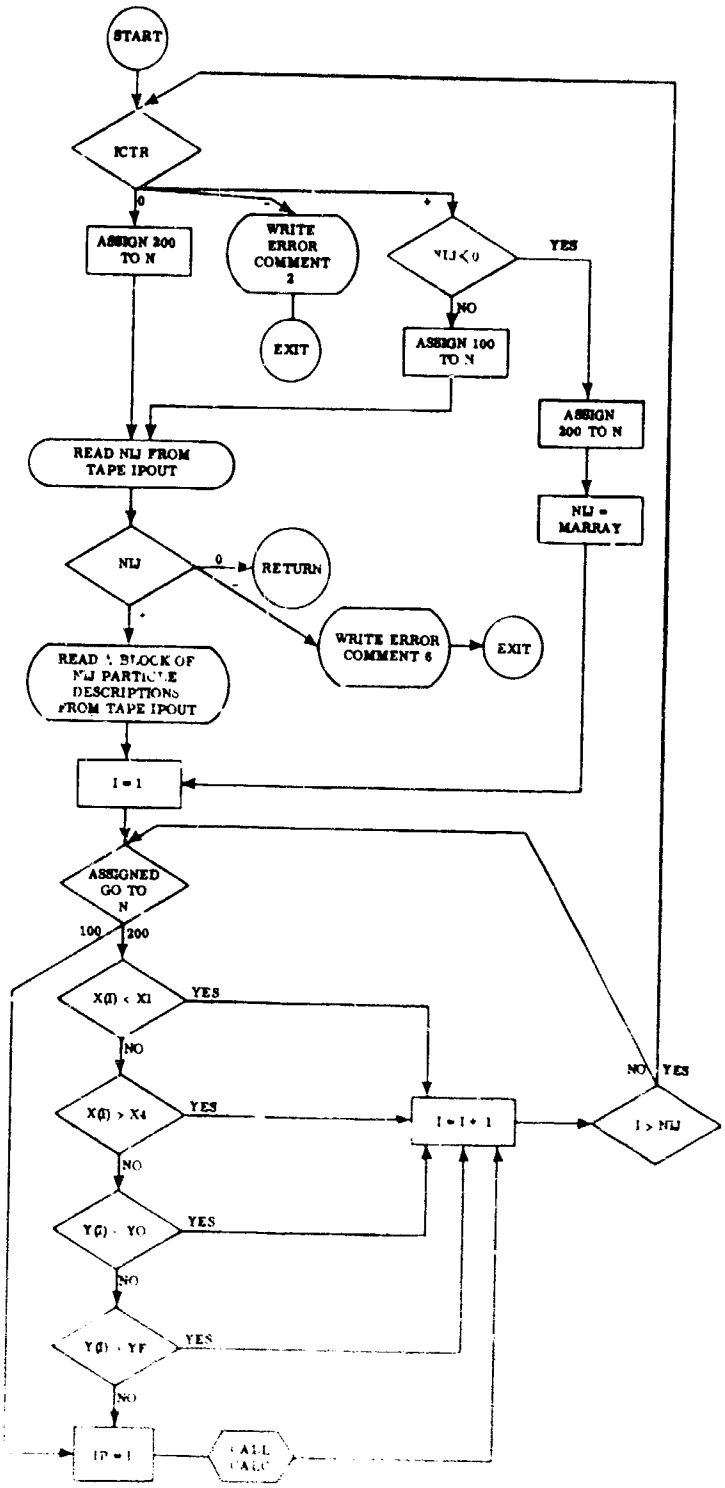

FC-10. Subroutine RUN1

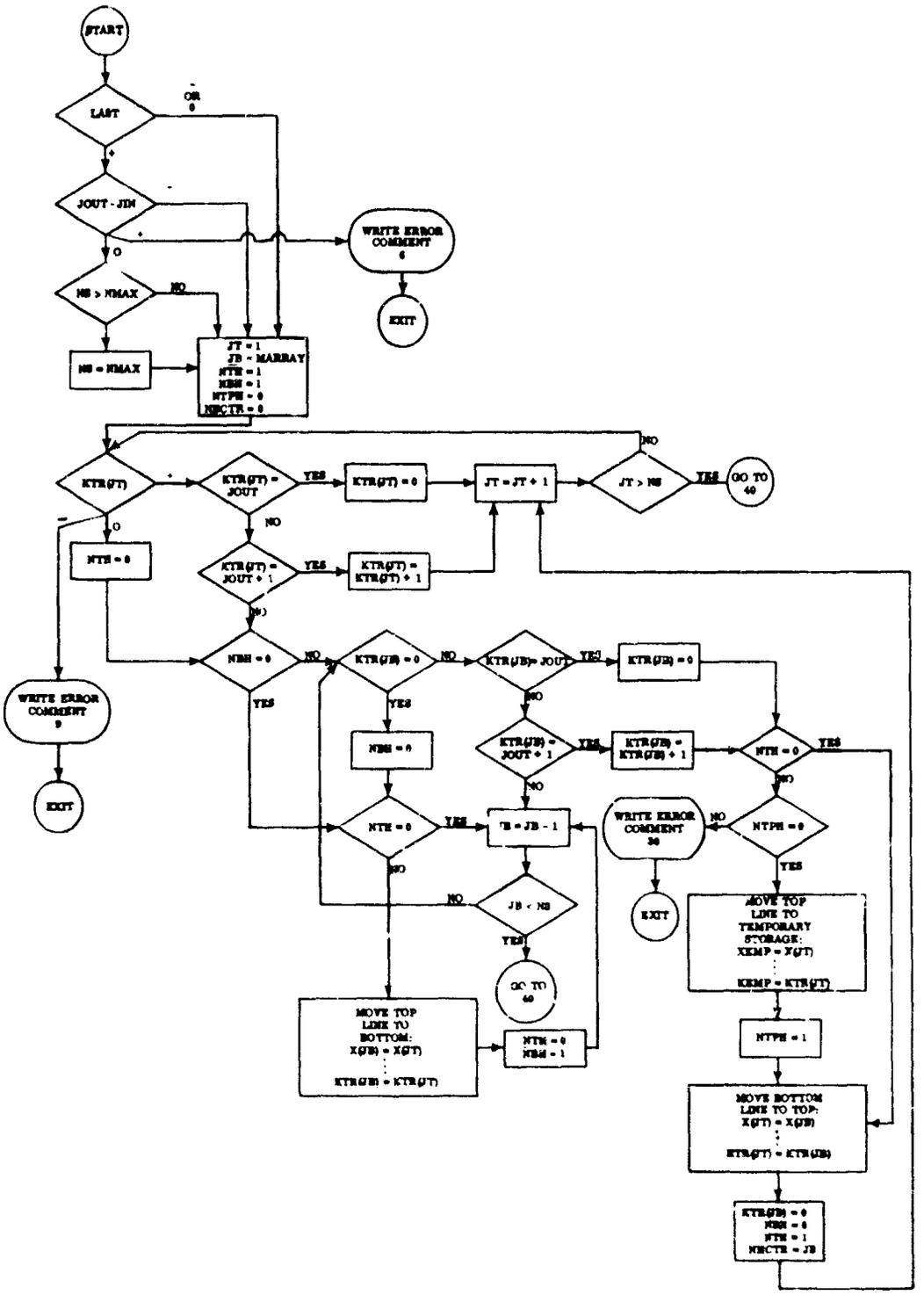

(a)

FC-11. Subroutine SHIFT

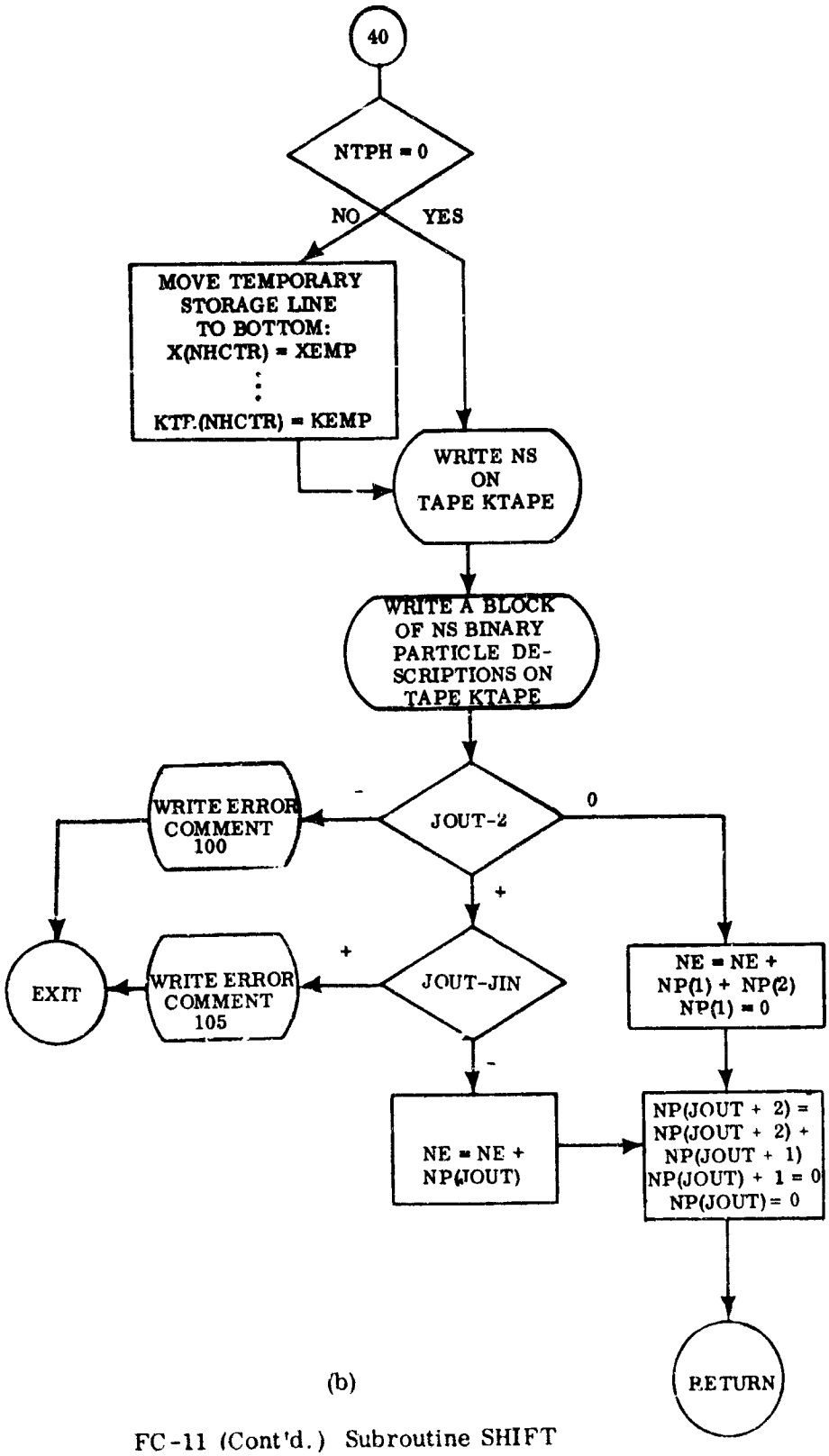

(b)

FC-11 (Cont'd.) Subroutine SHIFT

Next, the counter NS followed by NS particle descriptions are written onto the memory tape identified by KTAPE. NE, the counter of empty (available) lines in the particle arrays, is increased by the number of lines that have just been made available and appropriate adjustments are made to the affected members of the NP( ) class counter array . Then the program returns.

Subroutine SLIDE (FC-12)

It is the purpose of subroutine SLIDE to move the (incomplete) map ordinates which exist in the right (eastern) buffer zone to the left buffer zone and then to blank out the midsection and right buffer zone parts of the map array. The common argument variables NBZX2, NOX, NXMAP, and NYMAP are used to communicate the layout of the map array's buffer zones and midsection to subroutine SLIDE.

Subroutine ZERO (FC-13)

This subroutine merely scans down from the top of the particles array and collects NIJ empty particle descriptions in the top NIJ array positions. Empty particle descriptions are denoted by a zero in the associated position (same index) of the KTR array.

Subroutine DIFUZ1 (no flow chart)

This subroutine accounts for the effects of atmospheric diffusion through the use of an elementary model that adjusts the sizes of cloud subdivisions on the basis of only the amount of time that the subdivision spends in flight. See Volume IV for a discussion of the basis of this program.

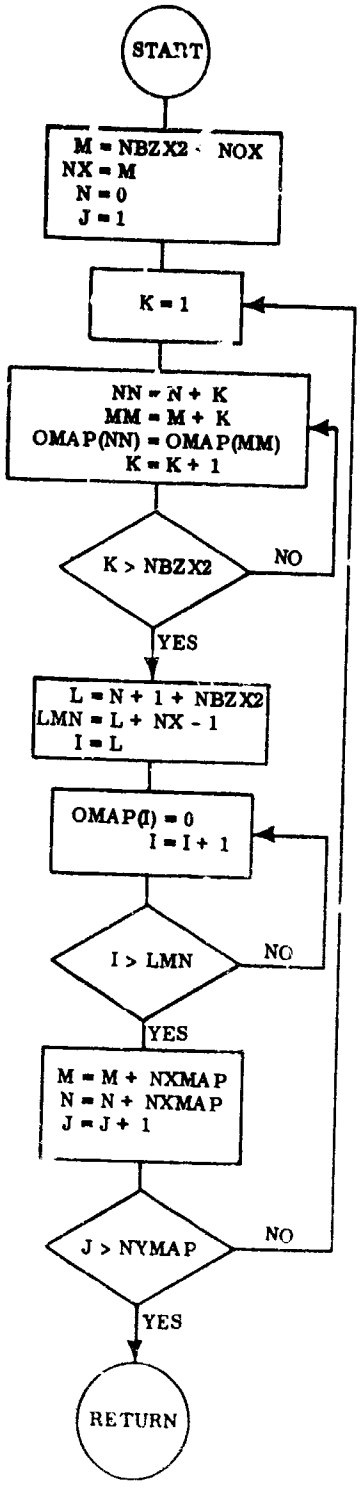

FC-12. Subroutine SLIDE

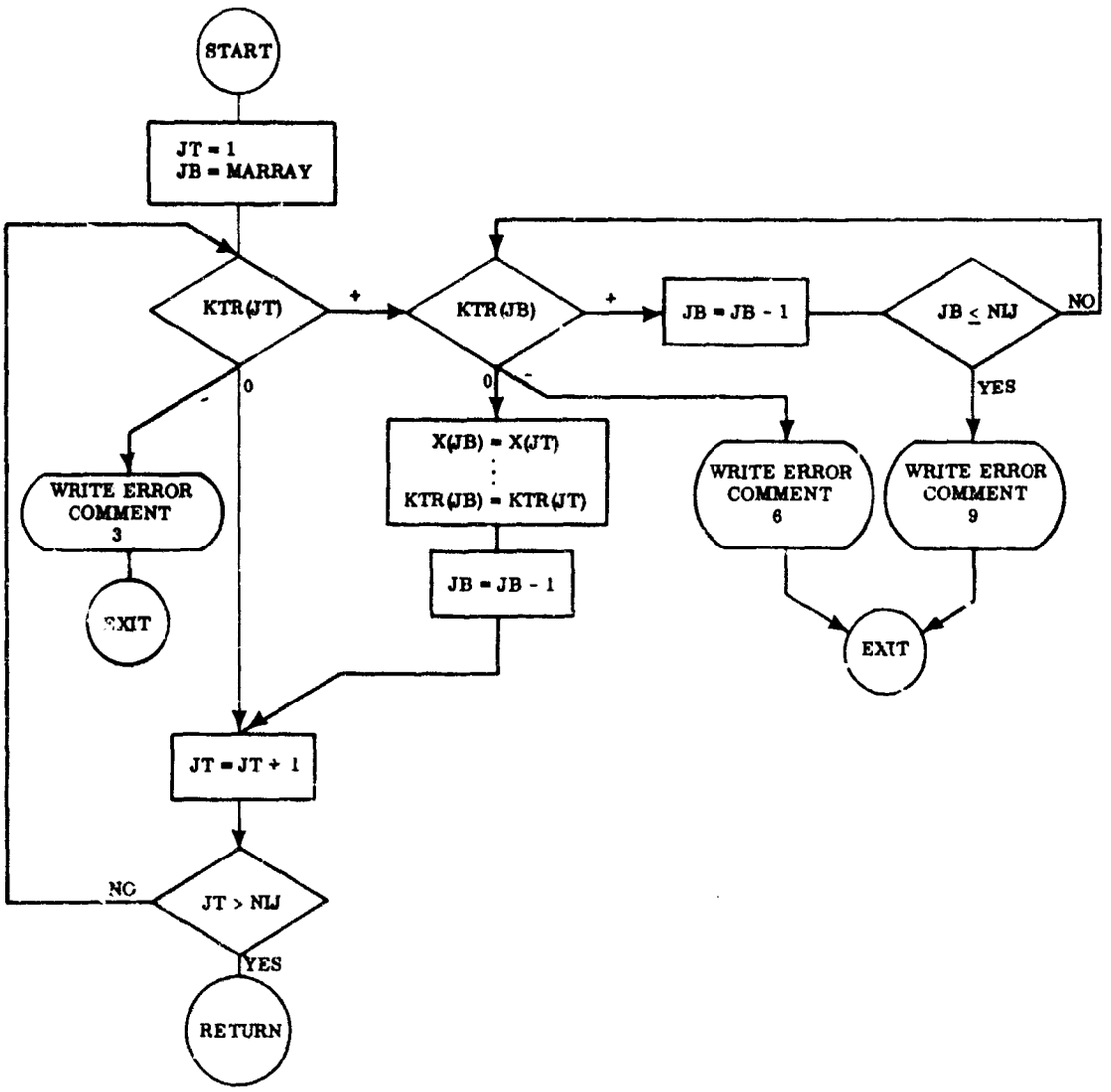

FC-13. Subroutine ZERO

USER INFORMATION

Card Inputs

Like each of the major subdivisions of DELFIC, the Output Processor requires a deck of input cards to identify and control its operation. In brief, these inputs consist of, first, a single set of identification and overall control data which will be referred to as "initialization data" and, second, a series of "local" data sets which indicate the geographic limits of the map to be produced by the program. Within each "local" data set there may be any number of individual map requests of the form:

NREQ T1 T2 MASCHN ,

where NREQ is a code integer denoting the kind of computation to be performed, T1 and T2 are time arguments to be used in deposited mass, exposure rate, and accumulated exposure computations, and MASCHN is a mass chain number that is specified only when the output is to be in terms of that single mass chain. Each map request results in the preparation and printing of a separate map showing the output indicated by the request code NREQ. The end of a "local" data set is indicated to the Output Processor by a map request card having a zero in the NREQ code field (a blank card will suffice).

Table 2 gives details of the card formats, program variable names, and the meanings and uses of variables for initialization data and local data sets. Note that a final blank card is required to indicate the end of the data deck and cause the program to terminate correctly, also, that certain card inputs to the particle activity module (subroutine PAM1) may be called for following the fourth input card for the Output Processor.

Card 1. Output Processor Run Identification. This card can be used to uniquely identify the current run of the Output Processor. The content of this card is made part of the hard copy output produced by the run.

Card 2. Available Tape Identifications. When required, extensive use is made of secondary tape memory so that the Output Processor can be reasonably efficient in producing large output maps or tabulations. This card should contain the "logical"

TABLE 2

DETAILS OF THE OUTPUT PROCESSOR DATA DECK

Data Set	Card No.	Content	Name of Program Variable	Format
Initialization Data	1	72 character identifier for the Output Processor run.	OPID(J)	(12A6)
	2	List of logical tape numbers of those tape units available for use in sorting	IOT(J)	(18I4)
	3	Overall control variables	IC(J)	(18I4)
	4	Printer description	IH, IV	(2I4)
Particle Activity Data Set (see Vol. V)	- - -	- - -	- - -	- - -
First "Local" Data Set	5	Map parameters limiting co-ordinates and grid intervals	XMAX, XMIN, YMAX, YMIN, DGX, DGY, GRUFF	(7F10.3)
	6	Local control variables	JC(J)	(18I4)
	7	First processing request on current map	NREQ, T1, T2, MASCHN	(I4, 2F10.3, I4)
	8	Second request		
	. . .	. . .		
		Request termination card (blank)		blank
Next "Local" Data Set		Next map specification See Card No. 5		
		Next local control variables See Card No. 6		
		Next deck if processing requests See Card No. 7		
		Request termination card (blank)		
Final Data Card		Data deck termination card (blank)		blank

identification numbers of all tapes which are available for use by the Output Processor. The program checks the input values to exclude FORTRAN system tapes and the grounded particles tape, and use of the remaining available tapes is made only when required for sorting particle data. As many as 18 tape numbers may be listed but at least one is required by the program.

Card 3. Overall Control Variables. Provision has been made for the specification of 18 unique overall control variables whose values are stored in the program in the array [IC(J), J = 1, 18]. At present only two of these variables have been given functions within the program, and the others remain for use in control and interprogram communication. The functioning variables are as follows:

IC(17) Controls the entrance to the Output Processor. IC(17) > 0 causes the program to stop without entering the Output Processor proper. This setting is used if only a printing of the grounded particles tape is desired.

IC(17) = 0 causes a normal entrance to the main body of the Output Processor regardless of whether the grounded particles tape has been printed.

IC(18) Controls the option to print the content of the grounded particles tape. IC(18) > 0 causes the grounded particles tape to be printed. IC(18) = 0 bypasses the printing of the grounded particle tape.

Card 4. Printer Description. To simplify the production of spatially undistorted maps, the Output Processor needs constants which describe the character spacing of the off-line printer to be used. These constants IH and IV give respectively the horizontal and vertical character spacings of the printer in characters per inch. For the usual IBM printer, 10 and 6 are appropriate values for IH and IV.

Card 5. Map Parameters. The desired output map must be characterized by the user who must specify its limiting coordinates and its grid intervals (grid point spacing). All maps are rectangular in shape and north-south, east-west in orientation, with north always at the top. The variables XMAX and XMIN indicate respectively the maximum and minimum values of the east-west coordinates of the map. YMAX and YMIN similarly indicate maximum and minimum values of the north-south map

coordinates. To allow flexibility, the scaled spacing between grid points on the output map has been arranged to be set by the user. The variables DGX and DGY indicate the intergrid-point distances in the east-west and north-south directions respectively. It should be noted that on the printed map the actual physical spacing of the data points is fixed by the printer's character and line spacing. Map printing formats have been arranged to achieve the greatest reasonable data point density on the printed page, and on IBM printers this amounts to three lines per grid interval in the vertical direction, and six characters per grid interval in the horizontal direction. If the user wishes to have a map of some particular scale produced by the Output Processor, he must set the parameters DGX and DGY to account for both the character spacing of the printer as well as the interdata-point character counts used by the program (3 lines per interval in the vertical direction and six characters per interval in the horizontal direction). Obviously, zero values should never be assigned to DGX or DGY.

An option exists within the Output Processor to cause it to adjust the grid intervals put in by the user so as to yield an undistorted map—a map on which the same scale factor applies in all directions. If the user has specified, via parameter JC(16), the automatic undistorted map option, the program makes use of either DGX or DGY as the scale factor basis, depending upon which of these two parameters will yield the largest undistorted map (smallest scale factor). The last item on this card is a ground roughness factor (GRUFF) by which the program multiplies all computed exposures and exposure rates before display.

Card 6. Local Control Variables. Provision has been made for the specification of 18 unique local control variables whose values are stored in the program in the array [JC(J), J=1, 18]. At present, only four of these variables have been given functions within the program, and the others remain for use in control and interprogram communication at the local level. The functioning variables are as follows:

JC(1) Output format control variable JC(1) = 1 results in the printing of the output map in a two-line E format which has the power of ten printed on one line and the associated multiplier printed immediately below it (see p. 7).

JC(1) = 2 results in the printing of a two-line F11.3 format which has the six highest order characters printed on the first line and the five lowest order characters on the second line (see p. 7).

JC(1) = 3 causes the Output Processor to write a map image onto the multiple burst tape (the unit identified in parameter MBTAPE as logical 11). This tape is written in a format acceptable to the separate multiple burst tape processing program MULTIB (see Volume VII of this documentation). When using the multiple burst option, care should be taken to see that the tape unit identified by parameter MBTAPE is not also specified as being available for use during the sorting operations of the Output Processor (Card 2).

JC(15) Diffusion control parameter JC(15) > 0 brings about the use of the diffusion subroutine DIFUZ1. JC(15) = 0 bypasses the diffusion model.

JC(16) Automatic undistorted map parameter JC(16) = 0 results in the automatic adjustment of the grid interval DGX or DGY to yield an undistorted output map.

JC(16) $\neq$ 0 results in no adjustment to the grid intervals.

JC(18) Grid interval adjustment control parameter

JC(18) = 0 indicates the user's permission for the program to make a small adjustment to the grid intervals to achieve greater program efficiency. This adjustment may result in increased map resolution but cannot result in decreased resolution.

JC(18) > 0 indicates the user's wish to have no adjustment made to the grid intervals. JC(18) > 0 overrides JC(16) = 0, i.e., for an automatic undistorted map, JC(18) and JC(16) must both equal zero.

Cards 7, 8 ... Processing Requests. Table 3 presents the meanings of the computation codes NREQ and arguments T1 and T2 for currently available computation options. MASCHN is the mass chain number if the output is to be for a single mass chain. Otherwise, its field may be left blank.

TABLE 3

AVAILABLE COMPUTATION CODES

Computation Code NREQ	Computation Type Description
0	Termination of the set of requests
1	Count of wafers covering each output point
2	Exposure rate normalized to time H + 1 hour
3	Exposure rate at time H + T1 hours
4	Integrated exposure, H + T1 to ∞ accounting for time of arrival
5	Integrated exposure, H + T1 to H + T2 accounting for time of arrival
6	Total mass deposited
7	Total mass deposited from time H + T1 to H + T2
8	Integrated exposure, H + T1 to H + T2 assuming all particles have arrived by H + T1 hours
9	Same as 8 integrated to infinity
10	Concentration of an individual mass chain (curies/m^2)
11	Time of arrival of first fallout particle
12	Time of deposit of last fallout particle
13	Smallest particle size deposited
14	Largest particle size deposited
15	Mass from particles in size range T1 to T2
16	H + 1 hour "normalized" exposure rate resulting from particles in size range T1 to T2 microns

Binary Input

The Output Processor Module takes binary input from the grounded particles tape (IPOUT) that is produced by the Transport Module. The structure and contents of this tape are described in detail in Table 4.

TABLE 4

THE GROUNDED PARTICLES TAPE, IPOUT
(Binary input to the Output Processor Module)

Logical Record No.	Record Content	Variable Names
1	Identification word (IPOUT)	IPOUT
2	Fission yield, mass of soil lifted, solidification temperature, time of solidification, spare, time at which transport was terminated, width of cloud subdivisions at time of definition, density of fallout particles, X, Y, and time coordinates of ground zero.	FW, SSAM, SLDTMP, TMSD, SIGMA, TW, HOB, NCL, TLIMIT, BZ, ROPART, XGZ, YGZ, TGZ
3	Run identifiers for Initial Conditions, Cloud Rise, Cloud Rise-Transport Interface, Transport, and Wind Field	(DETID(J), J=1, 12), (CRID(J), J=1, 12), (PSEID(J), J=1, 12), (TID(J), J=1, 12), (WID(J), J=1, 12)
4	Number of particle size ranges	NPS
5	Central particle size, associated mass, maximum particle size, and surface-to-volume ratio for each size range	PS(J), FMASS(J), PACT(J), SV(J), J=1, NPS
6	Topography identifier	TOPID(J), J=1, 12
7	Number of particle descriptions in the following data block	N
8	X coordinate, Y coordinate, time, particle size, and mass associated with each of N particles	NP(J), YP(J), TP(J), PS(J), FMAS(J), J=1, N
9	Same as record 7	
10	Same as record 8	
. . .	Pairs of records like 7 and 8 are repeated until all grounded particles are recorded	
Last record	The end of the grounded particles data set is indicated by a particle count of zero	N=0

PRECEDING PAGE BLANK NOT FILMED

FORTRAN LISTINGS

```
$IBFIC CALCX   LIST,DECK[illegible]
      SUBROUTINE CALC
C     P. FLUSSER  TECHNICAL OPERATIONS RESEARCH  SR  CALC
C     26  FEB  67
C*** THIS SUBROUTINE DETERMINES WHAT OUTPUT IS REQUESTED AND
C*** COMPUTES THE FINAL RESULTS.  THESE IT STORES IN AN ARRAY CALLED
C****     OMAP.
C
C ***********************************************************************
C
      COMMON /SET1/
     1        DIAM    ,DETID(12),IRISE   , IEXEC   , ISIN    , ISOUT     ,
     2        SD      , SPAR    , SSAM    , TME     , TMP1    , TMP2      ,
     3        T2M     , U       , VPR     , W       , HBURST  , SCLDHB    ,
     4        TID(40), RMIN     , IDISTR  , SPAR1   , MBTAPE  , FSUM      ,
     5        RUFSAM , SPAR5    , SPAR6   , XGZ     , YGZ     , TGZ
      COMMON  /SET3/
     1    BZ              ,BZ2             ,BZZ             ,BZZ2
     2   ,DELTAX          ,DGX             ,DGY             ,DIFCON
     3   ,DIFADJ          ,FMAS(500)       ,FMASS(200)      ,IC(18)
     4   ,ICON            ,ICTR            ,IH              ,IOT(18)
     5   ,IP              ,IPOUT           ,ITT(18)         ,IV
     6   ,JC(18)          ,JIN             ,JOUT            ,JPOUT
     7   ,KTR(500)        ,KTAPE           ,LAST            ,MAPRON
     8   ,MARRAY          ,MIN             ,MXREQ
     9   ,N               ,NA              ,NBZX            ,NBZX2
     1   ,NBZY            ,NCL             ,NE              ,NF
     2   ,NIJ             ,NMAP            ,NMAX            ,NOX
     3   ,NP(21)          ,NREQ            ,NS              ,NTAPES
     4   ,NTAPET          ,NTASK           ,NXMAP           ,NYMAP
     5   ,YMIN            ,PS(500)         ,PSIZE(200)      ,PACT(200)
     6   ,ROPART          ,SV(200)         ,T(500)          ,T1
     7   ,T2              ,TLIMIT          ,X(500)          ,XF
     8   ,XO              ,XMAX            ,XMIN            ,XNMAP
     9   ,X1              ,X2              ,X3              ,X4
     1   ,Y(500)          ,YF              ,YO              ,YMAX
      COMMON/DECAY/
     1    IGO          ,JD          ,KDOS          ,TENTER
     2   ,TEXIT        ,TIME
C
      COMMON/OUTPUT/
     1    FISNUM       ,FP     (200) ,FW            ,ITAB        ,JGO
     2   ,MASCHN       ,SIGMAS
      COMMON /SET4/  OMAP(4000)
C
C ***********************************************************************
C
 210  FORMAT(8H0FORMULA16,67H IS UNAVAILABLE. COMPUTATION WAS CONTINUED
     1FOR A REQUEST OF TYPE 1.)
C
C ***********************************************************************
C ***********************************************************************
C
C
      DATA PROGRM/6H CALC /
C
      ASSIGN 213 TO NORD
      GO TO(101,102,103,104,105,106,107,102,102,102,112,113,114,115,116
     1,117,109,110,111,120),NREQ
C
```


Best Available Copy

```
C 101  COUNT OF GROUNDED WAFERS
 101  F=1.0
      GO TO 100
C
C 103  DOSE RATE AT TIME H+T1 SECONDS
 103  IF(T(IP) -T1)102,102,777
C
C 104 DOSE ACCUMULATED FROM TIME H+T1 SECONDS TO INFINITY
 104  IF(T(IP)-T1)1041,1041,1042
 1041 TENTER=T1 -TGZ
      GO TO  130
 1042 TENTER=T(IP) -TGZ
      GO TO 130
C
C 105  DOSE ACCUMULATED FROM TIME H+T1 TO TIME H+T2 SECONDS
 105  IF(T(IP)-T2)1051,777,777
 1051 IF(T(IP)-T1)1052,1052,1053
 1052 TENTER=T(IP)-TGZ
      GO TO  130
 1053 TENTER=T1 -TGZ
      GO TO 130
C
C 106 TOTAL PARTICLE MASS DEPOSITED
 106  F=FMAS(IP)
      GO TO 100
C
C 107 TOTAL PARTICLE MASS DEPOSITED BETWEEN TIMES T1 AND T2 SECONDS
 107  IF(T(IP)-T2)1071,777,777
 1071 IF(T(IP)-T1)777,777,106
 130  CALL PAM2
C
C 102 FIND INDEX OF PARTICLE SIZE CLASS
 102  DO 131 J=1,ITAB
      IF(PACT(J).LE.PS(IP))GO TO 132
 131  CONTINUE
      CALL ERROR(PROGRM,131,ISOUT)
      GO TO 777
C
 132  IPS=J
      F=FP(IPS)*FMAS(IP)/(FMASS(IPS)*RUFSAM)
      GO TO 100
C
C 112 TIME OF ARRIVAL
 112  ASSIGN 211 TO NORD
 1121 F= T(IP)
      GO TO 100
C
C 113 TIME OF CESSATION
 113  ASSIGN 212 TO NORD
      GO TO 1121
C
C 114 SMALLEST PARTICLE SIZE
 114  ASSIGN 211 TO NORD
 1141 F= PS(IP)
      GO TO 100
C
C 115 LARGEST PARTICLE SIZE
 115  ASSIGN 212 TO NORD
      GO TO 1141
C
```

Best Available Copy

```
  1[illegible] MASS FRØM PARTICLES IN THE SIZE RANGE T1 TØ T2 MICRØNS.
 11[illegible] IF(PS(IP).GE.T1.AND.PS(IP).LE.T2)  GØ TØ 106
      GØ TØ 777
C
C 117 H+1 HR NØRMALIZED DØSE RATE RESULTING FRØM PARTICLES IN THE SIZE
C     RANGE T1 TØ T2 MICRØNS
 117  IF(PS(IP).GE.T1.AND.PS(IP).LE.T2)  GØ TØ 102
      GØ TØ 777
C
C
C************************ CØDE INSERTIØN PØINTS ************************
  109 CØNTINUE
 110  CØNTINUE
 111  CØNTINUE
C************************ CØDE INSERTIØN PØINTS ************************
C
 120  CØNTINUE
      WRITE (ISØUT,210)NREQ
      NREQ=1
      GØ TØ 101
  100 CØNTINUE
C
C     CALCULATE WAFER BØUNDARIES
      IF(JC(15))1001,1001,1002
 1002 CALL DIFUZ1(RZ2)
      F=F* BZ22/(RZ2**2)
      GØ TØ 1003
 1001 RZ2=BZ/2.0
 1003 WXL=X(IP)-RZ2
      WYT=Y(IP)+RZ2
      WYB=Y(IP)-RZ2
      WXR=X(IP)+RZ2
C
C     DØES WAFER (PARTIALLY) FALL IN LEFT BUFFER ZØNE...
      IF(X(IP)-X2)2,3,3
C     2=YES,ADJUST LEFT BØUNDARY AND SET NØL
 2    WXL=X2
      NØL=1+NBZX2
      GØ TØ 7
C     3=NØ,CØMPUTE NØL
C
C     NØL=SMALLEST X - INDEX ØF ANY GRID PT. WITHIN WAFER
 3    NØL=(WXL-X1)/DGX+1.0
C
C     DØES WAFER (PARTIALLY) FALL ØUTSIDE RIGHT BUFFER ZØNE
      IF(WXR-X4)4,4,6
C     4=NØ,CHECK IF GRID INTERVALS WERE ADJUSTED
 4    IF(NBZX+1)5,7,9
C     5=ERRØR
 5    IRRØR=5
      GØ TØ 333
 6    WXR=X4+.01*DGX
 7    JX=(WXR-X1)/DGX+1.0
      NWX=JX-NØL
C
C     ARE THERE ØUTPUT PTS TØ BE CØNSIDERED
      IF(NWX)777,777,10
 9    NWX=NBZX
C     NWX=NØ. ØF GRID PTS. CØVERED BY WAFER IN X DIRECTIØN
C
```

Best Available Copy

```
C     DOES WAFER (PARTIALLY) FALL IN LOWER BUFFER ZONE...
 11   IF(WYB-YMIN)11,12,12
C     YES, ADJUST LOWER BOUNDARY AND SET NOB
 11   WYB=YMIN
      NOB=1
      GO TO 16
C  12=NO,COMPUTE NOB
C     NOB=SMALLEST Y - INDEX OF ANY GRID PT WITHIN WAFER
 12   NOB=(WYB-YMIN)/DGY+1.0
C
C     DOES WAFER (PARTIALLY FALL IN UPPER BUFFER ZONE
      IF(WYT-YMAX)13,13,15
C  13=NO,CHECK IF GRID INTERVALS WERE ADJUSTED
 13   IF(NBZY+1)14,16,18
C  14=ERROR
 14   IRROR=14
      GO TO 333
   15 WYT=YMAX
   16 JY=(WYT-YMIN)/DGY+1.0
C     NWY=NO. OF GRID PTS. COVERED BY WAFER IN Y-DIRECTION
      NWY=JY-NOB
C
C     ARE THERE OUTPUT POINTS TO BE CONSIDERED
      IF(NWY)777,777,19
   18 NWY=NBZY
C
C  19=YES, COMPUTE WAFER CONTRIBUTION
C
   19 K=NOL+(NOB-1)*NXMAP
      MM=K+(NWY-1)*NXMAP
      NN=NNX-1
      DO 20 J=K,MM,NXMAP
      JJ=NN+J
      DO 20 I=J,JJ
      OMA=OMAP(I)
      GO TO NORD, (211,212,213)
 211  IF(OMA.EQ.0.0) GO TO 213
      OMAP(I)=AMIN1 (OMA,F)
      GO TO 20
 212  OMAP(I)=AMAX1(OMA,F)
      GO TO 20
 213  OMAP(I)=OMAP(I)+F
 20   CONTINUE
  777 RETURN
  333 CALL ERROR (PROGRM,IRROR,ISOUT)
C
      STOP
      END
```

Best Available Copy

```
C*** PROGRAM COUNT COMPUTES
C***   JOUT          THE NO. OF THE DENSELY POPULATED REGION
C***   NS            THE NUMBER OF PARTICLE PARAMETERS TO BE WRITTEN OUT
C***   NTAPE         THE TAPE NUMBER ON WHICH THESE PARTICLE PARAMETERS
C***   ARE TO BE WRITTEN OUT.
C
C ***********************************************************************
C
      COMMON /SET1/
     1        DIAM    ,DETID(12),IRISE   , IEXEC   , ISIN    , ISOUT    ,
     2        SD      , SPAR     , SSAM   , TME     , TMP1    , TMP2     ,
     3        T2M     , U        , VPR    , W       , HBURST  , SCLDHB   ,
     4        TID(40) , RMIN     , IDISTR , SPAR1   , MBTAPE  , ESOM     ,
     5        SPAR4   , SPAR5    , SPAR6  , SPAR7   , SPAR8   , SPAR9
      COMMON  /SET3/
     1    BZ              ,BZ2            ,BZZ            ,BZZ2
     2   ,DELTAX          ,DGX            ,DGY            ,DIFCON
     3   ,DIFADJ          ,EMASS(500)     ,EMASS(200)     ,IC(18)
     4   ,ICON            ,ICTR           ,IH             ,IOT(18)
     5   ,IP              ,IPOUT          ,ITT(18)        ,IV
     6   ,JC(18)          ,JIN            ,JOUT           ,JPOUT
     7   ,KTR(500)        ,KTAPE          ,LAST           ,MAPRUN
     8   ,MARRAY          ,MIN            ,MXREQ
     9   ,N               ,NA             ,NBZX           ,NBZX2
     1   ,NBZY            ,NCL            ,NE             ,NF
     2   ,NIJ             ,NMAP           ,NMAX           ,NOX
     3   ,NP(21)          ,NREQ           ,NS             ,NTAPES
     4   ,NTAPET          ,NTASK          ,NXMAP          ,NYMAP
     5   ,YMIN            ,PS(500)        ,PSIZE(200)     ,PACT(200)
     6   ,RDPART          ,SV(200)        ,T(500)         ,T1
     7   ,T2              ,TLIMIT         ,X(500)         ,XF
     8   ,X2              ,XMAX           ,XMIN           ,XNMAP
     9   ,X1              ,X2             ,X3             ,X4
     1   ,Y(500)          ,YF             ,Y2             ,YMAX
      COMMON /SET4/  QMAP(4000)
C
C ***********************************************************************
C
      DATA PROGRM/6HCOUNT
C
C ***********************************************************************
C ***********************************************************************
C
      MAX=NP(1)+NP(2)
      JOUT=2
      IF (JIN.LT.4) GO TO 6
      DO 4 J=4,JIN,2
      IF(MAX-NP(J)) 3,4,4
    3 MAX=NP(J)
      JOUT=J
    4 CONTINUE
      IF(MAX-NP(1)-NP(2))5,6,7
 5    CALL ERROR(PROGRM,-5,ISOUT)
    6 NS=MAX+NP(3)
      GO TO 8
    7 NS=NP(JOUT)+NP(JOUT+1)
```

Best Available Copy

```
8 JJ = JØUT/2                                                    CØUN  60
  KTAPE=IØT(JJ)                                                  CØUN  61
  RETURN                                                         CØUN  62
  END                                                            CØUN  63
```

```
$IBFTC CRDPX   LIST,DECK,M94/2
      SUBROUTINE CRDP
C     P. FLUSSER  TECHNICAL OPERATIONS RESEARCH  SR  CRDP
C
C   26FEB 67
C***AFTER ALL THE PARTICLE PARAMETERS HAVE BEEN READ FROM TAPE
C***IPOUT, SUBROUTINE CRDP IS CALLED AND WRITES OUT THOSE
C***PARTICLE PARAMETERS THAT ARE LEFT IN CORE ON THE APPROPRIATE
C***TAPES.   IT LEAVES THOSE PARTICLES THAT FALL INTO THE ZONE
C***WHICH IS TO BE TREATED NEXT IN CORE AND SETS NIJ=-1 AS A
C***SIGNAL TO SUBSEQUENTLY CALLED SUBROUTINES TO TREAT THESE
C***PARTICLES BEFORE READING NEW ZONES FROM TAPE.
C
C ***********************************************************************
C
      COMMON /SET1/
     1        DIAM    ,DETID(12),IRISE   , IDXEC   , ISIN    , ISOUT    ,
     2        SD      , SPAR    , DSAM   , TME     , TMP1    , TMP2     ,
     3        TOM     , U       , VPR    , W       , HBURST  , SCLDHF   ,
     4        TID(40) , RN      , IDISTR , SPAR1   , NOTAPE  , FSCM     ,
     5        SPAR4   , SPAR5   , SPAR6  , SPAR7   , SPAR8   , SPAR9
      COMMON  /SET3/
     1    BZ              ,BZZ            ,BZZ            ,BZZ2
     2    ,DELTAX         ,DGX            ,DGY            ,DIFCON
     3    ,DIFADJ         ,FMAS(500)      ,FMASS(200)     ,IC(18)
     4    ,ICON           ,ICOM           ,IH             ,IOT(18)
     5    ,IP             ,IPOUT          ,ITT(18)        ,IV
     6    ,JC(18)         ,JIN            ,JOUT           ,JPOUT
     7    ,KTP(500)       ,KTAPE          ,LAST           ,MAPRUN
     8    ,MAPRAY         ,MIN            ,MXREQ
     9    ,N              ,NA             ,NOZX           ,NOZX2
     1    ,NOZY           ,NCL            ,NE             ,NF
     2    ,NIJ            ,NMAP           ,NMAX           ,NOX
     3    ,NP(21)         ,NREG           ,NS             ,NTAPES
     4    ,NTAPET         ,NTASK          ,NXMAP          ,NYMAP
     5    ,YMIN           ,PS(500)        ,PSIZE(200)     ,PACT(200)
     6    ,RCPART         ,SV(200)        ,T(500)         ,T1
     7    ,T2             ,TLIMIT         ,X(500)         ,XF
     8    ,XO             ,XMAX           ,XMIN           ,XNMAP
     9    ,X1             ,X2             ,X3             ,X4
     1    ,Y(500)         ,YF             ,YO             ,YMAX
      COMMON /SET4/  OMAP(4000)
C
C ***********************************************************************
C
C
C ***********************************************************************
C ***********************************************************************
C
      K=JIN-2
C*** IS LAST ZONE SORTED... IF YES, WRITE OUT ALL ZONES,
C***IF NOT, TREAT LAST ZONE DIFFERENTLY.
      IF(LAST) 50,50,51
   50 K=K+2
 51   IF(K.LT.2) GO TO 52
      DO 1 J=2,K,2
      JOUT=J
      JJ=J/2
      KTAPE=IOT(JJ)
      IF(J-2)31,2,31
```

```
 31   NS=NP(J)+NP(J+1)                                                CRDP  60
      IF(NS) 2,2-3                                                    CRDP  61
    3 CALL SHIFT                                                      CRDP  62
    2 L=0                                                             CRDP  63
      WRITE (KTAPE)L                                                  CRDP  64
    1 REWIND KTAPE                                                    CRDP  65
C***  IS LAST ZONE WRITTEN OUT...                                     CRDP  66
 52   IF(LAST) 8,10,8                                                 CRDP  67
C***    CAN WE DUMP ALL PARTICLES NOW...                              CRDP  68
    8 IF(NP(JIN)-NMAX) 5,5,6                                          CRDP  69
    6 NS=NMAX                                                         CRDP  70
      NP(JIN)=NP(JIN)-NS                                              CRDP  71
      GO TO 7                                                         CRDP  72
    5 NS=NP(JIN)                                                      CRDP  73
    7 JOUT=JIN                                                        CRDP  74
      KTAPE=IOT(JIN)                                                  CRDP  75
      IF(NS)9,9,71                                                    CRDP  76
 71   CALL SHIFT                                                      CRDP  77
C***ARE ANY PARTICLES LEFT...                                         CRDP  78
      IF(NP(JIN)) 9,9,8                                               CRDP  79
    9 L=0                                                             CRDP  80
      WRITE (KTAPE)L                                                  CRDP  81
      REWIND KTAPE                                                    CRDP  82
   10 NIJ=-1                                                          CRDP  83
      RETURN                                                          CRDP  84
      END                                                             CRDP  85
```

```
$IBFTC DIFUX1  LIST,DECK,M94/2                                          DIFU   0
      SUBRØUTINE DIFUZ1(RZ2)                                            DIFU   1
C     T.W. SCHWENKE    TECHNICAL ØPERATIØNS RESEARCH                    DIFU   2
C     11 ØCT   66                                                       DIFU   3
C                                                                       DIFU   4
C     THIS SUBRØUTINE EXPANDS THE CLØUD SUBDIVISIØNS AS A MEANS ØF      DIFU   5
C     APPRØXIMATING THE EFFECTS ØF ATMØSPHERIC DIFFUSIØN.               DIFU   6
C                                                                       DIFU   7
C ***********************************************************************DIFU   8
C                                                                       DIFU   9
      CØMMØN /SET1/                                                     DIFU  10
     1        DIAM    ,DETID(12),IRISE  , IEXEC  , ISIN   , ISØUT     ,  DIFU  11
     2        SD      , SPAR    , SSAV  , TME    , TMP1   , TMP2      ,  DIFU  12
     3        T2M     , U       , VDR   , W      , HBURST , SCLDHB    ,  DIFU  13
     4        TID(40), RMIN     , IDISTR , SPAR1 , MBTAPE , ESUM      ,  DIFU  14
     5        SPAR4   , SUBRAD  , RADMAX , XGZ   , YGZ    , TGZ          DIFU  15
C                                                                       DIFU  16
C ***********************************************************************DIFU  17
C                                                                       DIFU  18
      CØMMØN  /SET3/                                                    DIFU  19
     1    BZ              ,BZ2            ,BZZ            ,BZ22           DIFU  20
     2   ,DELTAX          ,DGX            ,DGY            ,DIFCØN         DIFU  21
     3   ,DIFADJ          ,FMAS(500)      ,FMASS(200)     ,IC(18)         DIFU  22
     4   ,ICØN            ,ICTR           ,IH             ,IØT(18)        DIFU  23
     5   ,IP              ,IPØUT          ,ITT(18)        ,IV             DIFU  24
     6   ,JC(18)          ,JIN            ,JØUT           ,JPØUT          DIFU  25
     7   ,KTR(500)        ,KTAPE          ,LAST           ,MAPRUN         DIFU  26
     8   ,MARRAY          ,MIN            ,MXREQ                          DIFU  27
     9   ,N               ,NA             ,NBZX           ,NBZX2          DIFU  28
     1   ,NBZY            ,NCL            ,NE             ,NF             DIFU  29
     2   ,NIJ             ,NMAP           ,NMAX           ,NØX            DIFU  30
     3   ,NP(21)          ,NREQ           ,NS             ,NTAPES         DIFU  31
     4   ,NTAPET          ,NTASK          ,NXMAP          ,NYMAP          DIFU  32
     5   ,YYIN            ,PS(500)        ,PSIZE(200)     ,PACT(200)      DIFU  33
     6   ,RØPART          ,SV(200)        ,T(500)         ,T1             DIFU  34
     7   ,T2              ,TLIMIT         ,X(500)         ,XF             DIFU  35
     8   ,XØ              ,XMAX           ,XMIN           ,XNMAP          DIFU  36
     9   ,X1              ,X2             ,X3             ,X4             DIFU  37
     1   ,Y(500)          ,YF             ,YØ             ,YMAX           DIFU  38
C                                                                       DIFU  39
C ****   ************************************************************* DIFU  40
C                                                                       DIFU  41
      CØMMØN /SET4/  ØMAP(4000)                                         DIFU  42
C                                                                       DIFU  43
C ***********************************************************************DIFU  44
C                                                                       DIFU  45
C     THE VARIABLE DIFCØN HØLDS AT THIS PØINT THE PRØDUCT  3.0*DIFCØN   DIFU  46
C     WHERE DIFCØN ØRIGINALLY WAS PUT IN AS AN ATMØSPHERIC DIFUSIØN     DIFU  47
C     CØNSTANT.                                                         DIFU  48
C     BZ22 HAS THE SQUARE ØF BZ/2.0 ,THE WIDTH ØF THE CLØUD SUBDIVISIØN.DIFU  49
C                                                                       DIFU  50
 1    FØRMAT(53H DIFFUSIVE GRØWTH ØF CLØUD SUBDIVISIØNS IS EXCESSIVE.,3XDIFU  51
     1,3HX= F11.3,3HY= F11.3)                                           DIFU  52
C                                                                       DIFU  53
C ***********************************************************************DIFU  54
C ***********************************************************************DIFU  55
C                                                                       DIFU  56
      DATA NGØØF /0/                                                    DIFU  57
C                                                                       DIFU  58
      RZ2=SQRT(DIFCØN*(T(IP)-TGZ)+BZ22)                                 DIFU  59
```

```
IF(RZ2 .LE.BZ2)  RETURN                                          DIFU  60
RZ2=BZ2                                                          DIFU  61
NG0CF=NG0CF+1                                                    DIFU  62
IF(NG0CF .GT.0 .AND.NG0CF  .LT.50) WRITE(ISZUT,1)X(IP),Y(IP)     DIFU  63
RETURN                                                           DIFU  64
END                                                              DIFU  65
```

```
$IBFTC LETSG   LIST,DECK,M94/2
      SUBRØUTINE LETSGØ
C     26  FEB  67
C     P. FLUSSER  TECHNICAL ØPERATIØNS RESEARCH  SR  LETSGØ
C
C*** THIS SUBRØUTINE READS THE PARTICLE PARAMETERS FRØM TAPE IPØUT
C*** AND CALLS THE APPRØPRIATE SUBRØUTINES TØ PRØCESS THEM.
C*** SUBRØUTINES CALLED BY LETSGØ,...
C***PRØC,ZERØ,CØUNT,SHIFT,CRDP.
C***NE= NUMBER ØF EMPTY SPACES.
CG** MARRAY= DUMENSIØN ØF PARTICLE ARRAY
C*** NP(I)= NUMBER ØF PARTICLES FALLING IN ITH ZØNE
C*** KTR(I)= ZØNE INDENTIFICATIØN NUMBER ØF ITH PARTICLE
C*** NIJ= NØ. ØF PARTICLES IN NECT DATA BLØCK.
C
C ***********************************************************************
C
      CØMMØN /SET1/
     1        DIAM    ,DETID(12),IRISE   , IEXEC   , ISIN    , ISØUT     ,
     2        SD      , SPAR    , SSAM    , TME     , TMP1    , TMP2      ,
     3        T2M     , U       , VPR     , W       , HBURST  , SCLDHB    ,
     4        TID(40), RMIN     , IDISTR  , SPAR1   , MBTAPE  , FSUM      ,
     5        SPAR4   , SPAR5   , SPAR6   , SPAR7   , SPAR8   , SPAR9
      CØMMØN  /SET3/
     1    BZ              ,BZ2             ,BZZ             ,BZ22
     2   ,DELTAX          ,DGX             ,DGY             ,DIFCØN
     3   ,DIFADJ          ,FMAS(500)       ,FMASS(200)      ,IC(18)
     4   ,ICØN            ,ICTR            ,IH              ,IØT(18)
     5   ,IP              ,IPØUT           ,ITT(18)         ,IV
     6   ,JC(18)          ,JIN             ,JØUT            ,JPØUT
     7   ,KTR(500)        ,KTAPE           ,LAST            ,MAPRUN
     8   ,MARRAY          ,MIN             ,MXREQ
     9   ,N               ,NA              ,NBZX            ,NBZX2
     1   ,NBZY            ,NCL             ,NE              ,NF
     2   ,NIJ             ,NMAP            ,NMAX            ,NØX
     3   ,NP(21)          ,NREQ            ,NS              ,NTAPES
     4   ,NTAPET          ,NTASK           ,NXMAP           ,NYMAP
     5   ,YMIN            ,PS(500)         ,PSIZE(200)      ,PACT(200)
     6   ,RØPART          ,SV(200)         ,T(500)          ,T1
     7   ,T2              ,TLIMIT          ,X(500)          ,XF
     8   ,XØ              ,XMAX            ,XMIN            ,XNMAP
     9   ,X1              ,X2              ,X3              ,X4
     1   ,Y(500)          ,YF              ,YØ              ,YMAX
      CØMMØN /SET4/  ØMAP(4000)
C
C ***********************************************************************
C
      DATA PRØGRM/6HLETSGØ/
C
C ***********************************************************************
C ***********************************************************************
C
      NE=MARRAY
      K=JIN+1
      DØ 2 I=1,K
    2 NP(I)=0
      DØ 3 I=1,MARRAY
    3 KTR(I)=0
      ASSIGN 100 TØ NSN
    4 READ (IPØUT)NIJ
```

```
C*** ARE WE DØNE... 8=YES, 9=NØ.                                        LETS  60
      IF(NIJ) 5,8,9                                                     LETS  61
 5    IRRØR=-5                                                          LETS  62
 7734 CALL ERRØR(PRØGRM,IRRØR,ISØUT)                                    LETS  63
C***DUMP AND RETURN                                                     LETS  64
    8 CALL CRØP                                                         LETS  65
      GØ TØ 18                                                          LETS  66
    9 IF(NIJ-MARRAY) 11,11,10                                           LETS  67
 10   IRRØR=-10                                                         LETS  68
      GØ TØ 7734                                                        LETS  69
C*** IS THERE ENØUGH RØØM TØ READ NEXT DATA BLØCK...                    LETS  70
C*** 12= YES, PRØCEED, SHIFTING ZERØS IF NECESSARY.                     LETS  71
   11 IF(NIJ-NE) 12,12,15                                               LETS  72
   12 GØ TØ NSN,(100,200)                                               LETS  73
  100 ASSIGN 200 TØ NSN                                                 LETS  74
C*** 13= READ PARTICLE PARAMETERS DECREMENT EMPTY SPACES, PRØCESS       LETS  75
C***PARTICLES READ IN AND READ NUMBER ØF PARTICLES IN NEXT              LETS  76
C*** DATA BLØCK.                                                        LETS  77
   13 READ (IPØUT)(X(I),Y(I),T(I),PS(I),FMAS(I),I=1,NIJ)                LETS  78
      NE=NE-NIJ                                                         LETS  79
      CALL PRØC                                                         LETS  80
      GØ TØ 4                                                           LETS  81
  200 CALL ZERØ                                                         LETS  82
      GØ TØ 13                                                          LETS  83
   15 CALL CØUNT                                                        LETS  84
      CALL SHIFT                                                        LETS  85
      GØ TØ 11                                                          LETS  86
   18 RETURN                                                            LETS  87
      END                                                               LETS  88
```

```
$IPFTC LNK8     LIST,DECK,M94/2
      SUBROUTINE LINK8
C     T.W.SCHWENKE   TECHNICAL OPERATIONS RESEARCH   OUTPUT PROCESSOR  1
C     15 FEB 67
C     FIRST HALF OF THE OUTPUT PROCESSOR
C     THIS PROGRAM INITIALIZES AND WRITES HEADINGS FOR THE OUTPUT
C     PROCESSOR.  THEN IT CALLS THE FIRST PART OF THE PARTICLE ACTIVITY
C     MODULE (PAM1) TO PRECOMPUTE DATA USED BY THE SECOND PART OF THE
C     PARTICLE ACTIVITY MODULE WHICH WILL BE CALLED DURING THE
C     EXECUTION OF LINK9.
C
C ***********************************************************************
C
C
      COMMON /SET1/
     1        DIAM    ,DETID(12),IRISE   , ICXEC   , ISIN    , ISOUT     ,
     2        SD      , SPAR    , SSAM    , TME     , TMP1    , TMP2      ,
     3        T2M     , U       , VPR     , W       , HBURST  , SCLDHB    ,
     4        TID(40), RMIN    , IDISTR  , SPAR1   , MBTAPE  , FSUM      ,
     5        SPAR4   , SUBRAD  , RADMAX  , XOZ     , YOZ     , TOZ
      COMMON  /SET3/
     1    BZ              ,BZ2             ,BZZ             ,BZZ2
     2   ,DELTAX          ,DGX             ,DGY             ,DIFCON
     3   ,DIFADJ          ,FMAS(500)       ,FMASS(200)      ,IC(18)
     4   ,ICON            ,ICTR            ,IH              ,IOT(18)
     5   ,IP              ,IPOUT           ,ITT(18)         ,IV
     6   ,JC(18)          ,JIN             ,JOUT            ,JPOUT
     7   ,KTR(500)        ,KTAPE           ,LAST            ,MAPRUN
     8   ,MARRAY          ,MIN             ,MXREQ
     9   ,N               ,NA              ,NBZX            ,NBZX2
     1   ,NBZY            ,NCL             ,NE              ,NF
     2   ,NIJ.            ,NMAP            ,NMAX            ,NOX
     3   ,NP(21)          ,NREQ            ,NS              ,NTAPES
     4   ,NTAPET          ,NTASK           ,NXMAP           ,NYMAP
     5   ,YMIN            ,PS(500)         ,PSIZE(200)      ,PACT(200)
     6   ,ROPART          ,SV(200)         ,T(500)          ,T1
     7   ,T2              ,TLIMIT          ,X(500)          ,XF
     8   ,XO              ,XMAX            ,XMIN            ,XNMAP
     9   ,X1              ,X2              ,X3              ,X4
     1   ,Y(500)          ,YF              ,YO              ,YMAX
      COMMON/OUTPUT/
     1   FISNUM       ,FP     (200) ,FW            ,ITAB          ,JOB
     2   ,MASCHN       ,SIGMAS
C
C     DIMENSIONS PECULIAR TO LINK8
      DIMENSION          CRID(12)        ,OPID(12)        ,PSLID(12)
     1  ,TOPID(12)       ,WID(12)
C
C*********************************** GLOSSARY ***************************
C**********  FOR ADDITIONAL GLOSSARY ITEMS SEE VOL. IV, SUBROUTINE  ****
C**********  LINK5                                                  ****
C
C     BZ                 WIDTH OF CLOUD WAFER AS FIRST READ
C     BZ2 = BZ/2 IS THE WIDTH OF THE BUFFER ZONE BETWEEN MAP ZONES.
C     BZ22               SQUARE OF HALF THE CLOUD SUBDIVISION LENGTH
C     DELTAX             MAP ZONE WIDTH EXCLUSIVE OF BUFFER ZONES
C     DGX, DGY - LENGTHS OF GRID INTERVALS IN X AND Y DIRECTIONS
C          RESPECTIVELY
C     DIFADJ             ADJUSTMENT FACTOR TO ALLOW FOR DIFFUSIVE GROWTH
C                        OF CLOUD SUBDIVISIONS.
```

Best Available Copy

```
C     DIFCØN              ATMØSPHERIC DIFFUSIØN CØNSTANT                          LNK6  60
C     GRUFF     A GRØUND RØUGHNESS FACTØR                                         LNK6  61
C     HTST,DTST,PØUT      TEMPØRARY STØRAGE                                         LNK6  62
C     IC(J)               ØVERALL CØNTRØL VARIABLES                                 LNK6  63
C     IC(17)  PØSITIVE MEANS STØP WITHØUT ENTERING ØUTPUT PRØCESSØR                 LNK6  64
C     IC(17) = 0 MEANS PRØCEED WITH JØB                                             LNK6  65
C     IC(18) PØSITIVE MEANS PRINT TAPE IPØUT BEFØRE EXECUTIØN                       LNK6  66
C     IC(18) = 0 MEANS DØ NØT PRINT TAPE IPØUT                                      LNK6  67
C     ICØN                A RØUTE CØNTRØL PARAMETER                                 LNK6  68
C     ICTR                A CØNTRØL PARAMETER                                       LNK6  69
C     IH,IV               HØRIZØNTAL AND VERTICAL CHARACTER SPACINGS FØR            LNK6  70
C                         THE PRINTER IN TERMS ØF CHARACTERS PER INCH               LNK6  71
C     IØT(J)              ID NUMBERS ØF AVAILABLE TAPE UNITS                        LNK6  72
C     IPØUT = JPØUT - TAPE ØN WHICH PARTICLE PARAMETERS ARE WRITTEN BY              LNK6  73
C          THE TRANSPØRT PRØGRAM.                                                   LNK6  74
C     ISØUT               SYSTEM ØUTPUT TAPE NUMBER                                 LNK6  75
C     IXØER               ERRØR STØP TRACE WØRD                                     LNK6  76
C     IØIN                SYSTEM INPUT TAPE NUMBER                                  LNK6  77
C     ITT(J)              ID NUMBERS ØF AVAILABLE TAPE UNITS                        LNK6  78
C     JC(J)               LØCAL CØNTRØL VARIABLES                                   LNK6  79
C     JC(1) ... ØUTPUT FØRMAT CØNTRØL VARIABLE                                      LNK6  80
C     =1     2 LINE E FØRMAT PRINTER MAP                                            LNK6  81
C     =2     2 LINE F11.3 FØRMAT PRINTER MAP                                        LNK6  82
C     =3       BINARY MULTIPLE BURST TAPE                                           LNK6  83
C     JC(15)              IF PØSITIVE CAUSES THE USE ØF AN ATMØSPHERIC              LNK6  84
C                         DIFFUSIØN MØDEL                                           LNK6  85
C     JC(16) = 0 .... ADJUST GRID INTERVALS TØ YIELD AN UNDISTØRTED MAP             LNK6  86
C          HAVING A MINIMUM SCALE FACTØR BASED ØN DGX ØR DGY.                       LNK6  87
C     JC(16) = 0 .....     ADJUSTMENT ØF GRID INTERVALS PERMITTED                   LNK6  88
C     JC(16) = 1 .....     NØ ADJUSTMENT ØF GRID INTERVALS PERMITTED                LNK6  89
C     JØ,NI               TEMPØRARY STØRAGE                                         LNK6  90
C     LAST                =1 INDICATES A SUBSEQUENT SØRT IS REQUIRED                LNK6  91
C     MARRAY = MAXIMUM NUMBER ØF WAFERS THAT CAN BE CØNSIDERED AT ØNE               LNK6  92
C          TIME                                                                     LNK6  93
C     MAPRUN = 0    ...    MAP CALLED FØR FIRST TIME                                LNK6  94
C     MAPRUN = +N   ...    MAP HAS PREVIØUSLY PRINTED N STRIPS ØF A MAP             LNK6  95
C     MRTAPE              MULTIPLE BURST TAPE NUMBER                                LNK6  96
C     MIN                 NUMBER ØF CLASSES USED FØR PARTICLE SØRT                  LNK6  97
C     MXREQ               MAXIMUM NUMBER ØF PRØCESSING REQUEST TYPES                LNK6  98
C                         ALLØWED FØR IN THE CØDE                                   LNK6  99
C     NBZX = NUMBER ØF GRID PØINTS IN X DIRECTIØN ØF WAFER                          LNK6 100
C     NBZX2 = NBZX/2 = NUMBER ØF GRID PØINTS IN X DIRECTIØN ØF THE                  LNK6 101
C          BUFFER ZØNE.                                                             LNK6 102
C     NCL                 NUMBER ØF PARTICLE CLASSES                                LNK6 103
C     NID                 NUMBER ØF PARTICLE DESCRIPTIØNS IN THE CURRENT            LNK6 104
C                         PARTICLE BLØCK                                            LNK6 105
C     NMAP, XNMAP = NUMBER ØF ØUTPUT GRID PØINTS ØN ENTIRE MAP                      LNK6 106
C     NMAX = MAXIMUM NUMBER ØF WAFERS THAT SHØULD BE WRITTEN IN ØNE                 LNK6 107
C          BLØCK ØN THE TAPE CØNTAINING WAFERS THAT HAVE YET TØ BE                  LNK6 108
C          SØRTED.                                                                  LNK6 109
C     NOL                 SMALLEST X INDEX ØF A MAP PØINT TØ THE RIGHT ØF           LNK6 110
C                         THE LEFT BØUNDARY ØF THE CLØUD SUBDIVISIØN                LNK6 111
C     NØX = NUMBER ØF GRID PØINTS IN X DIRECTIØN IN THE CØRE-LØAD MAP               LNK6 112
C          WITHØUT BUFFER ZØNES.                                                    LNK6 113
C     NØX                 THE NUMBER ØF GRID INTERVALS IN DELTAX                    LNK6 114
C     NREQ                CØMPUTATIØN TYPE CØDE                                     LNK6 115
C     NRQ                 A CØUNTER FØR MAP REQUESTS                                LNK6 116
C     NST                 TEMPØRARY STØRAGE ØF A DATA BLØCK CØUNT                   LNK6 117
C     NTAPES              THE NUMBER ØF AVAILABLE TAPE UNITS                        LNK6 118
C     NTAPET              THE NUMBER ØF AVAILABLE TAPE UNITS                        LNK6 119
```


Best Available Copy

```
C     NTASK              A SEQUENTIAL COUNTER FOR SPECIFICATIONS OF MAP   LNK6 120
C                        COORDINATES AND GRID INTERVALS                   LNK8 121
C     NXMAP = NUMBER OF GRID POINTS IN X DIRECTION IN THE CORE-LOAD MAP LNK6 122
C          COUNTING 2 BUFFER ZONES                                       LNK6 123
C     NYMAP = NUMBER OF GRID POINTS IN Y DIRECTION IN THE CORE-LOAD MAP LNK6 124
C     NZ                 NUMBER OF MAP ZONES RIGHT OF 1ST MAP             LNK6 125
C     EMAP(J)            THE MAP ARRAY                                    LNK6 126
C     OPID( )            OUTPUT PROCESSOR IDENTIFICATION                  LNK6 127
C     OX                 THE FLOATING EQUIVALENT OF NOX                   LNK6 128
C     TOPID( )           TOPOGRAPHY IDENTIFICATION                        LNK8 129
C     T1,T2              REQUEST TIME ARGUMENTS                           LNK8 130
C     WID( )             WIND FIELD IDENTIFICATION                        LNK8 131
C     X,Y,T,PS,ID        PARTICLE DESCRIPTION VARIABLES (INDEXED)         LNK6 132
C     XMAX,XMIN          MAXIMUM AND MINIMUM X COORDINATES OF THE MAP     LNK6 133
C     XO,YO,XF,YF        LIMITING MAP COORDINATES TAKING INTO ACCOUNT     LNK6 134
C                        THE BOUNDARY BUFFER ZONES                        LNK6 135
C     YMAX,YMIN          MAXIMUM AND MINIMUM Y COORDINATES OF THE MAP     LNK6 136
C                                                                         LNK6 137
C                                                                         LNK6 138
C ***********************************************************************LNK8 139
C                                                                         LNK6 140
 1    FORMAT(12A6)                                                        LNK6 141
 2    FORMAT(15X,16I4)                                                    LNK6 142
 3    FORMAT(//36H PLEASE REPLACE THE REEL ON LOGICAL ID,19H WITH A BLANKLNK6 143
     1K TAPE                    /////1H0)                                LNK6 144
 5    FORMAT(A6,I5,5E12.5)                                                LNK6 145
 6    FORMAT(29H0 WRONG TAPE REEL ON DRIVE   I2)                          LNK6 146
 7    FORMAT(46H0PLEASE MOUNT THE CORRECT TAPE AND PRESS START)           LNK6 147
 8    FORMAT(1X71H                                                        LNK6 148
     1*                                                                   LNK6 149
 9    FORMAT(6F10.3)                                                      LNK6 150
 10   FORMAT(////29X,65H****  SUMMARY OF INPUT IDENTIFIERS AND INITIAL CLNK6 151
     1ONDITIONS  ****//25X43H****  OUTPUT PROCESSOR IDENTIFICATION  ***LNK6 152
     2*/25X,12A6///25X,56H****  INITIAL CONDITIONS (FIREBALL) IDENTIFICALNK8 153
     3TION  ****/25X,12A6///25X,37H****  CLOUD RISE IDENTIFICATION  ***LNK8 154
     4/25X,12A6///25X,49H****  PARTICLE SET EXPANSION IDENTIFICATION  **LNK6 155
     5**,      /25X,12A6///25X,36H****  TRANSPORT IDENTIFICATION  ****/25LNK6 156
     6X,12A6//25X31H****  WIND IDENTIFICATION  ****/25X,12A6///25X,37H**LNK6 157
     7**  TOPOGRAPHY IDENTIFICATION  ****/25X,12A6)                      LNK6 158
 11   FORMAT(//15X24HTRANSPORT IDENTIFICATION//25X,12A6)                  LNK6 159
 12   FORMAT(//25X,24H****  OTHER INPUTS  ****)                           LNK6 160
 15   FORMAT(16I4)                                                        LNK6 161
 13   FORMAT(/15X,26HTHE DIFFUSION CONSTANT IS F12.5)                     LNK6 162
 16   FORMAT(/15X77H****  THE CONTROL VARIABLE ARRAY, IC(J), WAS GIVEN LLNK6 163
     1HE FOLLOWING VALUES  ****)                                          LNK6 164
 19   FORMAT(//15X54HTHE FOLLOWING LOGICAL TAPES ARE AVAILABLE FOR SORTILNK6 165
     1NG.)                                                                LNK6 166
 21   FORMAT(//15X43HPRINTER DESCRIPTION  -  CHARACTERS PER INCH)         LNK6 167
 22   FORMAT(16X,10HHORIZONTAL I5,10X,10HVERTICAL  I3)                    LNK8 168
 26   FORMAT(15X1HX,19X1HY,19X1HT,16X2HPS,19X4HMASS)                      LNK8 169
 28   FORMAT(1H1///51X19H* * * * * * * * * *//12X101HT H E   D E P A R TLNK8 170
     1 M E N T   O F   D E F E N S E   F A L L O U T   P R E D I C T I OLNK8 171
     2 N   S Y S T E M,//51X,19H* * * * * * * * * *////48X,23HOUTPUT PROLNK6 172
     3CESSOR MODULE///55X,11HPREPARED BY/43X,34HTECHNICAL OPERATIONS RESLNK8 173
     4EARCH,INC./52X,17HBURLINGTON, MASS.)                               LNK6 174
 29   FORMAT( ///45X29HLISTING OF GROUNDED PARTICLES)                     LNK8 175
 30   FORMAT(//10X6HBLOCK I4)                                             LNK8 176
 35   FORMAT(I5)                                                          LNK8 177
 36   FORMAT(5F20.4)                                                      LNK8 178
 37   FORMAT(36HNO. OF PARTICLES IN THIS BLOCK IS  I4)                    LNK8 179
```

Best Available Copy

```
 59   FØRMAT(33H NØ XEQ. THIS JØB, JUST TAPE DUMP)
C
C************************* BEGINNING ØF PRØGRAM ***************************
C ***********************************************************************
C
      LØGICAL SKIP
      DATA PRØGRM,HTST/6H LINK8,6HIPØUT
C
C ***********************************************************************
C
      MSTAPE=11
      KØUT=ISØUT
      DIFADJ=3.0
      IPØUT=9
      JPØUT=IPØUT
      MXREQ=20
      MARRAY=500
      NMAX=300
      NMAP=4000
      XNMAP=NMAP
      NTASK=0
C     CHECK IDENTIFICATIØN ØF IPØUT
 102  REWIND IPØUT
      READ (IPØUT)PØUT
      DTST=AND(PØUT,CØMPL(HTST))
      IF(DTST)100,101,100
 100  PRINT 6,IPØUT
      WRITE (ISØUT,6)IPØUT
      WRITE (ISØUT,7)
      PRINT 7
      PAUSE
      GØ TØ 102
 101  READ(IPØUT)FW,SSAM,SLDTMP,TMSD,SIGMA,TW,HØB,NCL,TLIMIT,BZ,RØPART,
     1 XGZ,YGZ,TGZ,RADMAX
      SIGMAS=.5*(SIGMA**2)
C
C     PRECØMPUTATIØN FØR DIFFUSIØN MØDEL
      SUBRAD=BZ/2.0-RADMAX
      RADMAX=RADMAX**2
C
C     READ PREVIØUS IDENTIFIERS FRØM GRØUNDED PARTICLES TAPE
      READ (IPØUT) (DETID(J),J=1,12),(CRID(J),J=1,12),(PSEID (J),J=1,12)
     1,(TID(J),J=1,12),(ØID(J),J=1,12)
      READ (IPØUT)NPS
      READ(IPØUT)(PSIZE(J),FMASS(J),PACT(J),SV(J),J=1,NPS)
      READ (IPØUT)(TØPID(J),J=1,12)
C
C     READ IDENTIFIER FØR ØUTPUT PRØCESSØR RUN
      READ (ISIN,1)(ØPID(J),J=1,12)
C
C
C     READ LIST ØF AVAILABLE TAPES
      READ (ISIN,15)(IØT(J),J=1,18)
C     TEST TØ REMØVE ØTHER PRØGRAM TAPES
      NTAPES=18
      DØ 103 J=1,18
      IF(IØT(J))108,105,106
 106  IF(IØT(J)-IPØUT)107,108,107
 107  IF(IØT(J)-ISØUT)109,108,109
 109  IF(IØT(J)-ISIN)103,108,103
```


Best Available Copy

```
 108  IØT(J)=0
 105  NTAPES=NTAPES-1
 103  CØNTINUE
      NTAPET=NTAPES
C
C     NØW CØNSØLIDATE IN THE ARRAY
      JB=1+NTAPES
      DØ 104 J=1,NTAPES
      IF(IØT(J))104,111,104
 111  IF(IØT(JB))112,112,113
 113  IØT(J)=IØT(JB)
      JB=JB+1
      GØTØ 104
 112  JB=JB+1
      GØ TØ 111
 104  ITT(J)=IØT(J)
C
C     READ CØNTRØL VARIABLE ARRAY
      READ (ISIN,15)(IC(J),J=1,16)
C
      READ (ISIN,9)DIFCØN
C     THIS PART ØF THE CØDE DUMPS TAPE IPØUT IF REQUIRED
C     IC(18) PØSITIVE MEANS DUMP TAPE IPØUT BEFØRE EXECUTIØN
C     IC(18) = 0 MEANS DØ NØT DUMP TAPE IPØUT
      IF(IC(18)) 500,5021,502
 500  IRRØR=-500
      GØ TØ 333
 502  SKIP=.FALSE.
      WRITE (ISØUT,28)
      WRITE (ISØUT,29)
      WRITE (ISØUT,11)(TID(J),J=1,12)
 5021 SKIP=.TRUE.
      NST=0
 600  READ (IPØUT)NIJ
      NST=NST+1
      IF(NIJ) 503,501,504
 503  IRRØR=-503
      GØ TØ 333
 504  READ (IPØUT)(X(I),Y(I),T(I),PS(I),FMAS(I),I=1,NIJ)
      IF(SKIP) GØ TØ 600
      WRITE (ISØUT,30)NST
      WRITE (ISØUT,37)NIJ
      WRITE (ISØUT,26)
      WRITE (ISØUT,36)(X(I),Y(I),T(I),PS(I),FMAS(I),I=1,NIJ)
      GØ TØ 600
 501  CØNTINUE
C     IC(17)  PØSITIVE MEANS STØP WITHØUT ENTERING ØUTPUT PRØCESSØR
C     IC(17) = 0 MEANS PRØCEED WITH JØB
 505  IF(IC(17)) 506,511,510
 506  IRRØR=-506
 333  CALL ERRØR (PRØGRM,IRRØR,ISØUT)
 510  WRITE (ISØUT,39)
      STØP
C     END ØF TAPE IPØUT DUMP
C
 511  CØNTINUE
C
C     READ PRINTER DESCRIPTIØN - CHAR/INCH HØRIZØNTAL  RTICAL
 5111 READ (ISIN,15)IH,IV
C     PRINT A HEADING TØ IDENTIFY PRINTED ØUTPUT
```

Best Available Copy

```
      WRITE (IS0UT,28)                                                  LNK8 300
      WRITE (IS0UT,10) (0PID(J),J=1,12),(DLTID(J),J=1,12),(CRID(J),J=1,LNK8 301
     12),(PSEID(J),J=1,12),(TID(J),J=1,12),(WID(J),J=1,12),(T0PID(J),J=1LNK8 302
     2,12)                                                              LNK8 303
      WRITE (IS0UT,12)                                                  LNK8 304
      WRITE (IS0UT,16)                                                  LNK8 305
      WRITE (IS0UT,2)(IC(J),J=1,18)                                     LNK8 306
      WRITE (IS0UT,19)                                                  LNK8 307
      WRITE (IS0UT,2)(I0T(J),J=1,18)                                    LNK8 308
      WRITE (IS0UT,21)                                                  LNK8 309
      WRITE (IS0UT,22)IH,IV                                             LNK8 310
      WRITE (IS0UT,13)DIFC0N                                            LNK8 311
C                                                                       LNK8 312
C     PERFORM PRECOMPUTATION FOR DIFFUSION MODEL                        LNK8 313
      DIFC0N   0*DIFC0N                                                 LNK8 314
C                                                                       LNK8 315
      CALL PAM1                                                         LNK8 316
     1    (H0B     ,SLDTMP  ,TMSD    ,TW                               LNK8 317
     2    ,ISIN    ,IS0UT   ,IP0UT   ,SIGMA )                          LNK8 318
  117 RETURN                                                            LNK8 319
      END                                                               LNK8 320
```

```
$IBFTC LNK9    LIST,DECK,M94/2
      SUBROUTINE LINK9
C      26 FEB 67
C     SECOND HALF OF THE OUTPUT PROCESSOR
C     SUBROUTINES CALLED
C     MAP
C     RUN1
C     SLIDE
C     LETSGO
C     SHIFT
C     CALC
C     CRDP
C     ZERO
C     PROC
C     COUNT
C
C ***********************************************************************
C
      COMMON /SET1/
     1        DIAM    ,DETID(12),IRISE   , ILXEC   , ISIN    , ISOUT     ,
     2        SD      , SPAR    , SSAM    , TME     , TMP1    , TMP2      ,
     3        T2M     , U       , VPR     , W       , HBURST  , SCLDHB    ,
     4        TID(40), RMIN     , IDISTR  , SPAR1   , MSTAPE  , FSUM      ,
     5        RUFSAM  , SUBRAD  , RADMAX  , XGZ     , YGZ     , TGZ
      COMMON  /SET3/
     1    BZ              ,BZ2             ,BZZ             ,BZ22
     2   ,DELTAX          ,DGX             ,DGY             ,DIFCON
     3   ,DIFADJ          ,FMAS(500)       ,FMASS(200)      ,IC(18)
     4   ,ICON            ,ICTR            ,IH              ,IOT(18)
     5   ,IP              ,IPOUT           ,ITT(18)         ,IV
     6   ,JC(18)          ,JIN             ,JOUT            ,JPOUT
     7   ,KTR(500)        ,KTAPE           ,LAST            ,MAPRUN
     8   ,MARRAY          ,MIN             ,MXREQ
     9   ,N               ,NA              ,NBZX            ,NBZX2
     1   ,NBZY            ,NCL             ,NE              ,NF
     2   ,NIJ             ,NMAP            ,NMAX            ,NOX
     3   ,NP(21)          ,NREQ            ,NS              ,NTAPES
     4   ,NTAPET          ,NTASK           ,NXMAP           ,NYMAP
     5   ,YMIN            ,PS(500)         ,PSIZE(200)      ,PACT(200)
     6   ,RPART           ,SV(200)         ,T(500)          ,T1
     7   ,T2              ,TLIMIT          ,X(500)          ,XF
     8   ,XO              ,XMAX            ,XMIN            ,XNMAP
     9   ,X1              ,X2              ,X3              ,X4
     1   ,Y(500)          ,YF              ,YO              ,YMAX
      COMMON/OUTPUT/
     1    FISNUM       ,FP     (200) ,FW            ,ITAB        ,JGZ
     2   ,MASCHN       ,SIGMAS
      COMMON/DECAY/
     1    IGO          ,JD            ,KDOS          ,TENTER
     2   ,TEXIT        ,TIME
C
      COMMON /SET4/  OMAP(4000)
C
C ***********************************************************************
C
 1    FORMAT(12A6)
 2    FORMAT (//15X,23HSUM OF MAP ORDINATES = E13.6 )
 3    FORMAT(1H1////54X,11H* * * * * *)
 4    FORMAT (//15X,23HGROUND ROUGHNESS FACTOR F10.3 )
 9    FORMAT(7F10.3)
```

```
 15   FØRMAT(18I4)
 17   FØRMAT(32H ØUTPUT PRØCESSING IS CØMPLETED.)
 23   FØRMAT(1H1///39X27H****  ØUTPUT PRØCESSØR TASK15,6H  ****)
 24   FØRMAT(///15X25HGRID LIMITS AND INTERVALS/18X4HXMIN10X4HXMAX10X4HY
     1MIN10X4HYMAX10X7HDELTA X10X7HDELTA Y/15XF10.0,4XF10.0,4XF10.0,4XF1
     20.0,5XF10.1,5XF10.1)
 25   FØRMAT(//15X71HTHE CØNTRØL VARIABLE ARRAY, JC(J), HAS BEEN GIVEN T
     1HE FØLLØWING VALUES./15X16I4)
 27   FØRMAT(/15X32HMAPPED ØN GRID INTERVALS  DGX = F10.1,7H   DGY=F10.1
     1)
 31   FØRMAT(117HØINADEQUATE PRINTER DESCRIPTIØN. AN ØNDISTØRTED MAP CAN
     1NØT BE GUARANTEED. THIS RUN WAS CØNTINUED WITH GRID INTERVALS /5X5
     23H ADJUSTED FØR MAXIMUM EFFICIENCY.)
 32   FØRMAT(I4,2F10.3 ,I4)
 33   FØRMAT(25HØUNACCEPTABLE REQUEST ...I4)
 34   FØRMAT(//////15X,15HREQUEST NUMBER I4///15X,5HTYPE I4,10X5HT1 = F1
     10.1,10X,5HT2 = F10.1,10X,9HMASCHN = I4)
 35   FØRMAT(I5)
C
C ***********************************************************************
C ***********************************************************************
C
      DATA PRØGRM  /6H LINK9/
      LØGICAL JØ,KØØS,IGØ
C
      IGØ=.TRUE.
      NUL=0
      FSUM=0.0
 119  IF(FSUM.EQ.0.0)  GØ TØ 1191
      WRITE(ISØUT,2) FSUM
      FSUM=0.0
C
C1191 READ LIMITS ØN AREA ØF INTEREST
 1191 READ (ISIN,9) XMAX,XMIN,YMAX,YMIN,DGX,DGY,GRUFF
      IF (GRUFF.EQ.0.0)  GRUFF = 1.0
      IF(DGX+DGY)120,120,121
 120  WRITE (ISØUT,17)
      REWIND IPØUT
      PRINT 17
      STØP
C
C     READ ØTHER SPECIFIC INPUT
 121  READ (ISIN,15)(JC(J),J=1,18)
      NTASK=NTASK+1
      NRQ=0
C
C     CHECK PRINTER DESCRIPTIØNS
      NI=IH*IV
      IF(NI)601,601,122
 601  JC(16)=1
      WRITE (ISØUT,31)
C
C 122  WRITE  A LØCAL HEADING
 122  WRITE (ISØUT,23)NTASK
      WRITE (ISØUT,24)XMIN,XMAX,YMIN,YMAX,DGX,DGY
      WRITE (ISØUT,25)(JC(J),J=1,18)
      WRITE (ISØUT,4)  GRUFF
      GØ TØ 1209
C
 1211 IF(JC(1).EQ.3) WRITE (MBTAPE)NUL,NUL
```

```
C
 1209 IF (FSUM.EQ.0.0) GØ TØ 1219
      WRITE (ISØUT,2) FSUM
C 1219 READ A REQUEST FØR PRØCESSING
 1219 READ (ISIN,32)NREQ,T1,T2,MASCHN
      IF(MASCHN.EQ.0.AND.NREQ.NE.10)GØ TØ 1210
      IF(MASCHN.GT.71.AND.MASCHN.LT.162) GØ TØ 1210
      CALL ERRØR(PRØGRM,1209,ISØUT)
      MASCHN=95
 1210 DØ 935 I=1,NMAP
  935 ØMAP(I)=0.0
      DØ 936 I=1,MARRAY
      X(I)=0.0
 936  Y(I)=0.0
      ICØN=0
      MAPRUN=0
      NRQ=NRQ+1
      FSUM = 0.0
      NTAPES=NTAPET
      DØ 937 I=1,NTAPET
 937  IØT(I)=ITT(I)
C
C     IS NREQ AN ACCEPTABLE REQUEST
C     NØ TØ 1215
      IF(NREQ)1212,1212,1213
 1213 IF(NREQ-MXREQ)1214,1214,1215
 1215 WRITE (ISØUT,33)NREQ
      GØ TØ 1209
C
C     MXREQ IS MAXIMUM NUMBER ØF CALCULATIØN CØDES ALLØWED FØR IN CALC.
C 1212 NØ MØRE REQUESTS. PREPARE TØ RETURN TØ READ LØCAL DATA.
 1212 CØNTINUE
      GØ TØ 119
 1214 IPØUT=JPØUT
      REWIND IPØUT
      READ(IPØUT)TST
      READ (IPØUT)(TST,J=1,15)
      READ(IPØUT)(DETID(J),J=1,12),(DETID(J),J=1,12),(DETID(J),J=1,12),
     1(DETID(J),J=1,12),(DETID(J),J=1,12)
      READ(IPØUT)NPS
      READ(IPØUT)(PSIZE(J),FMASS(J),PACT(J),SV(J),J=1,NPS)
      READ(IPØUT)(DETID(J),J=1,12)
      IF(NRQ-1)1221,1222,1223
 1221 WRITE (ISØUT,3)
 1222 WRITE (ISØUT,34)NRQ,NREQ,T1,T2,MASCHN
      RUFSAM = SSAM/GRUFF
      JGØ=1
      ITAB=NPS
      FISNUM=FW*1.45E15
      IF(NREQ.EQ.15.ØR.NREQ.EQ.16) GØ TØ 1223
      T1=TIMSEC(T1,3,0)
      T2=TIMSEC(T2,3,0)
 1223 TIME=T1-TGZ
      TENTER=TIME
      TEXIT=T2-TGZ
      JD=.TRUE.
      KDØS=.FALSE.
      GØ TØ (80,81,79,78,82,80,80,82,78,83,80,80,80,80,80,81,80,80,80,80
     1),NREQ
 81   TIME=3600.0
```

```
      GØ TØ 79                                                          LNK9 160
 82   KDØS=.TRUE.                                                       LNK9 161
      GØ TØ 78                                                          LNK9 162
 83   JGØ=2                                                             LNK9 163
      FISNUM=FISNUM*1.E+4                                               LNK9 164
      RUFSAM=SSAM                                                       LNK9 165
      GØ TØ 79                                                          LNK9 166
 78   JD=.FALSE.                                                        LNK9 167
      FISNUM=FISNUM*3600.                                               LNK9 168
 79   CALL PAM2                                                         LNK9 169
 80   CØNTINUE                                                          LNK9 170
C                                                                       LNK9 171
C     INITIALIZE FØR PRØCESSING                                         LNK9 172
      ICTR=0                                                            LNK9 173
      BZ2=BZ*0.5                                                        LNK9 174
      BZ22=BZ2*BZ2                                                      LNK9 175
C                                                                       LNK9 176
C     IS USE ØF DIFFUSIØN MØDEL REQUESTED.  YES TØ 1218                 LNK9 177
      IF(JC(15))1217,1217,1218                                          LNK9 178
C                                                                       LNK9 179
C1218 ADJUST BUFFER ZØNE WIDTH TØ ALLØW FØR FØRTHCØMING DIFFUSIVE GRØWTHLNK9 180
C     ØF CLØUD SUBDIVISIØNS.                                            LNK9 181
 1218 BZ2=BZ2*DIFADJ                                                    LNK9 182
C                                                                       LNK9 183
C1217 IS A GRID INTERVAL ADJUSTMENT PERMITTED     YES TØ 130            LNK9 184
 1217 IF(JC(18)-1)130,131,130                                           LNK9 185
C                                                                       LNK9 186
C     NØ ADJUSTMENT PERMITTED ØPTIØN                                    LNK9 187
 131  NBZX=-1                                                           LNK9 188
      NBZY=-1                                                           LNK9 189
      NBZX2=BZ2/DGX+1.0                                                 LNK9 190
 1311 TST=NBZX2                                                         LNK9 191
      BZ2=TST*DGX                                                       LNK9 192
C     THE BUFFER ZØNE IS NØW AN INTEGRAL NUMBER ØF GRID INTERVALS WIDE  LNK9 193
      GØ TØ 140                                                         LNK9 194
C                                                                       LNK9 195
C 130   IS AN UNDISTØRTED MAP DESIRED    YES TØ 1302                    LNK9 196
 130  IF(JC(16))1301,1302,1301                                           LNK9 197
 1302 DISY=IV                                                           LNK9 198
      DISX=IH                                                           LNK9 199
      RD=2.0*DISY/DISX                                                  LNK9 200
      DISX=RD*DGY                                                       LNK9 201
      IF(DISX-DGX)1303,1304,1304                                        LNK9 202
 1303 DGX=DISX                                                          LNK9 203
 1304 DGY=DGX/RD                                                        LNK9 204
      GØ TØ 131                                                         LNK9 205
 1301 IF(JC(15).GT.0 ) GØ TØ 131                                        LNK9 206
C                                                                       LNK9 207
C     EFFICIENCY ADJUSTMENT                                             LNK9 208
      NBZX=BZ/DGX                                                       LNK9 209
      TST=NBZX                                                          LNK9 210
      TST=TST*DGX                                                       LNK9 211
      IF(BZ-TST)133,1341,1361                                           LNK9 212
 1361 IF(NBZX)133,136,134                                               LNK9 213
 136  NBZX=-1                                                           LNK9 214
      NBZX2=1                                                           LNK9 215
      GØ TØ 137                                                         LNK9 216
 133  IRRØR=-133                                                        LNK9 217
      GØ TØ 333                                                         LNK9 218
C                                                                       LNK9 219
```

```
C 134 ADJUST DGX TØ MAKE BZ AN INTEGRAL MULTIPLE ØF IT.
 134  NBZX=NBZX+1
      TST=NBZX
      DGX=BZ/TST
 1341 NBZX2=(NBZX+1)/2
C
C     NØW FØR THE Y DIMENSIØN
 137  NBZY=BZ/DGY
      TST=NBZY
      TST=TST*DGY
      IF(BZ-TST) 135,1311,1371
 1371 IF(NBZY)135,138,139
 135  IRRØR=-135
      GØ TØ 333
 138  NBZY=-1
      GØ TØ 1311
 139  NBZY=NBZY+1
      TST=NBZY
      DGY=BZ/TST
      GØ TØ 1311
C
 140  XØ=XMIN-BZ2
      YØ=YMIN-BZ2
      XF=XMAX+BZ2
      YF=YMAX+BZ2
C
C     PREPARE TØ PRØCESS ØUTPUT
C*******CALCULATE NUMBER ØF ZØNES BEYØND FIRST NEEDED IN SØRTING
      NYMAP = (YMAX - YMIN)/DGY
      NXMAP=(XF-XØ)/DGX
      NST = NMAP/NYMAP
      IF(NXMAP-NST) 1503,1503,1402
 1402 NXMAP=NST
      XMAP=NXMAP
      ZZ=(XF-XØ)/(XMAP*DGX)
      NZ=ZZ
      TST=NZ
      IF(ZZ-TST) 1500,1501,1401
 1500 IRRØR=-1500
      GØ TØ 333
 1501 NZ=NZ-1
      GØ TØ 1401
 1503 NZ=0
C
C******** END ØF ZØNE CALCULATIØN
 1401  NØX=NXMAP-NBZX2-NBZX2
      IF(NØX)1403,1403,1404
 1403 IRRØR=-1403
 333  CALL ERRØR (PRØGRM,IRRØR,IØUT)
      GØ TØ 1211
 1404 ØX=NØX
      DELTAX=ØX*DGX
C
 1502 WRITE(IØUT,27)DGX,DGY
C
      X1=XØ
      X2=X1+BZ2
      X3=X2+DELTAX
      X4=X3+BZ2
 300  IF(NZ-NTAPES) 200,200,201
```

```
200   MIN=NZ                                                  LNK9 300
      LAST=0                                                  LNK9 301
      GØ TØ 202                                               LNK9 302
201   MIN=NTAPES                                              LNK9 303
      LAST=1                                                  LNK9 304
202   JIN=2*MIN                                               LNK9 305
      IF(NZ)203,204,205                                       LNK9 306
203   IRRØR=-203                                              LNK9 307
      GØ TØ 333                                               LNK9 308
204   CALL RUN1                                               LNK9 309
      CALL MAP                                                LNK9 310
      GØ TØ 1211                                              LNK9 311
205   IF(LAST)206,207,209                                     LNK9 312
206   IRRØR=-206                                              LNK9 313
      GØ TØ 333                                               LNK9 314
207   CALL LETSGØ                                             LNK9 315
      ICTR=1                                                  LNK9 316
      DØ 208 INDEX=1,MIN                                      LNK9 317
      CALL MAP                                                LNK9 318
      IPØUT=IØT(INDEX)                                        LNK9 319
      X1=X3                                                   LNK9 320
      X2=X4                                                   LNK9 321
      X3=X4+DELTAX                                            LNK9 322
      X4=X3+BZ2                                               LNK9 323
      CALL SLIDE                                              LNK9 324
      CALL RUN1                                               LNK9 325
208   REWIND IPØUT                                            LNK9 326
      CALL MAP                                                LNK9 327
      GØ TØ 1211                                              LNK9 328
209   CALL LETSGØ                                             LNK9 329
      KIN2=IPØUT                                              LNK9 330
      ICTR=1                                                  LNK9 331
      KIN=MIN-1                                               LNK9 332
      DØ 210 INDEX=1,KIN                                      LNK9 333
      CALL MAP                                                LNK9 334
      IPØUT=IØT(INDEX)                                        LNK9 335
      X1=X3                                                   LNK9 336
      X2=X4                                                   LNK9 337
      X3=X4+DELTAX                                            LNK9 338
      X4=X3+BZ2                                               LNK9 339
      CALL SLIDE                                              LNK9 340
      CALL RUN1                                               LNK9 341
210   REWIND IPØUT                                            LNK9 342
      CALL MAP                                                LNK9 343
      IPØUT=IØT(MIN)                                          LNK9 344
      IF(ICØN)2111,2112,2111                                  LNK9 345
2112  NTAPES=NTAPES-1                                         LNK9 346
      ICØN=1                                                  LNK9 347
      GØ TØ 2113                                              LNK9 348
2111  IØT(MIN)=KIN2                                           LNK9 349
2113  REWIND IPØUT                                            LNK9 350
      NZ=NZ-MIN                                               LNK9 351
      X1=X3                                                   LNK9 352
      X2=X4                                                   LNK9 353
      X3=X2+DELTAX                                            LNK9 354
      X4=X3+BZ2                                               LNK9 355
      CALL SLIDE                                              LNK9 356
      GØ TØ 300                                               LNK9 357
      END                                                     LNK9 358
```

```
$IBFTC MAPX    LIST,DECK,M94/2                                          MAPX   0
      SUBROUTINE MAP                                                   MAPX   1
C     26  FEB  67                                                      MAPX   2
C     T.W.SCHWENKE   TECHNICAL OPERATIONS RESEARCH   SR MAP            MAPX   3
C                                                                      MAPX   4
C ***********************************************************************MAPX   5
C                                                                      MAPX   6
      COMMON /SET1/                                                    MAPX   7
     1        DIAM    ,DETID(12),IRISE  , IEXEC  , ISIN   , ISOUT    ,  MAPX   8
     2        SD      , SPAR    , SSAM  , TME    , TMP1   , TMP2      ,  MAPX   9
     3        T2M     , U       , VPR   , W      , MBURST , SCLDMB    ,  MAPX  10
     4        TID(40) , RMIN    , IDISTR , SPAR1 , MBTAPE , FSUM      ,  MAPX  11
     5        SPAR4   , SPAR5   , SPAR6 , XGZ    , YGZ    , TGZ        MAPX  12
      COMMON  /SET3/                                                   MAPX  13
     1    BZ              ,BZ2            ,BZZ            ,BZ22         MAPX  14
     2   ,DELTAX          ,DGX            ,DGY            ,DIFCON       MAPX  15
     3   ,DIFADJ          ,FMAS(500)      ,FMASS(200)     ,IC(18)       MAPX  16
     4   ,ICON            ,ICTR           ,IH             ,IOT(18)      MAPX  17
     5   ,IP              ,IPOUT          ,ITT(18)        ,IV           MAPX  18
     6   ,JC(18)          ,JIN            ,JOUT           ,JPOUT        MAPX  19
     7   ,KTR(500)        ,KTAPE          ,LAST           ,MAPRUN       MAPX  20
     8   ,MARRAY          ,MIN            ,MXREQ                        MAPX  21
     9   ,N               ,NA             ,NBZX           ,NBZX2        MAPX  22
     1   ,NBZY            ,NCL            ,NE             ,NF           MAPX  23
     2   ,NIJ             ,NMAP           ,NMAX           ,NOX          MAPX  24
     3   ,NP(21)          ,NREQ           ,NS             ,NTAPES       MAPX  25
     4   ,NTAPET          ,NTASK          ,NXMAP          ,NYMAP        MAPX  26
     5   ,YMIN            ,PS(500)        ,PSIZE(200)     ,PACT(200)    MAPX  27
     6   ,ROPART          ,SV(200)        ,T(500)         ,T1           MAPX  28
     7   ,T2              ,TLIMIT         ,X(500)         ,XF           MAPX  29
     8   ,XO              ,XMAX           ,XMIN           ,XNMAP        MAPX  30
     9   ,X1              ,X2             ,X3             ,X4           MAPX  31
     1   ,Y(500)          ,YF             ,YO             ,YMAX         MAPX  32
      COMMON /SET4/  OMAP(4000)                                        MAPX  33
      DIMENSION JMAP(20)                                               MAPX  34
C                                                                      MAPX  35
C ***********************************************************************MAPX  36
C                                                                      MAPX  37
 1    FORMAT(1H1,5HSTRIP I3)                                           MAPX  38
 2    FORMAT(/1X,19I6)                                                 MAPX  39
 3    FORMAT(15X21HTWO-LINE E FORMAT MAP)                              MAPX  40
 4    FORMAT(5X,19F6.3)                                                MAPX  41
 5    FORMAT(15X26HTWO-LINE F11.3 FORMAT MAP.)                         MAPX  42
 6    FORMAT(16HODISPLAY METHOD I4,33H IS NOT AVAILABLE. USED METHOD 1.)MAPX  43
 7    FORMAT(//15X,28HTHE OUTPUT PRESENTATION IS A)                    MAPX  44
 8    FORMAT(//15X,25HTHE QUANTITY PRESENTED IS)                       MAPX  45
 9    FORMAT(15X,27HA COUNT OF GROUNDED WAFERS.)                       MAPX  46
 10   FORMAT(15X,38HDOSE RATE NORMALIZED TO TIME H+1 HOUR.)            MAPX  47
 11   FORMAT(15X,20HDOSE RATE AT TIME H+F10.1,9H SECONDS.)             MAPX  48
 12   FORMAT(15X,32HDOSE ACCUMULATED BETWEEN TIME H+F10.1,22H SECONDS ANMAPX  49
     1D INFINITY.)                                                     MAPX  50
 13   FORMAT(15X,32HDOSE ACCUMULATED BETWEEN TIME H+F10.1,12H AND TIME HMAPX  51
     1+F10.1,9H SECONDS.)                                              MAPX  52
 14   FORMAT(15X,54HTOTAL MASS OF DEPOSITED PARTICLES.)                MAPX  53
 15   FORMAT(15X,44HTOTAL PARTICLE MASS DEPOSITED BETWEEN TIMES F10.1,5HMAPX  54
     1 AND F10.1,9H SECONDS.)                                          MAPX  55
 16   FORMAT(/1X,F7.0,3X,2(10X,5H*****,F12.0,3X),20X,5H*****,/)        MAPX  56
 17   FORMAT(15X,41HASSUMES ALL PARTICLES ARE GROUNDED BY T1.)         MAPX  57
 18   FORMAT(15X,17HACTIVITY AT TIME F10.1,19H DUE TO MASS CHAIN I4)   MAPX  58
 19   FORMAT(15X,26HMULTIPLE BURST BINARY TAPE)                        MAPX  59
```

```
 20   FORMAT(15X,31HGROUND ZERO IS LOCATED AT  X = F10.1,8H  , Y = F10.1MAPX  60
     1)                                                                 MAPX  61
 21   FORMAT(1H1,41X,36HY-COORDINATE SCALES FOR SIDES OF MAP/1H0)       MAPX  62
 22   FORMAT(//1X,F13.0,82X,F13.0)                                      MAPX  63
 23   FORMAT(15X,46HTIME (SECONDS) OF ONSET OF FALLOUT DEPOSITION.)     MAPX  64
  4   FORMAT(15X,50HTIME (SECONDS) OF CESSATION OF FALLOUT DEPOSITION.) MAPX  65
 25   FORMAT(15X,50HDIAMETER (MICRONS) OF SMALLEST DEPOSITED PARTICLE.) MAPX  66
 26   FORMAT(15X,49HDIAMETER (MICRONS) OF LARGEST DEPOSITED PARTICLE.)  MAPX  67
 27   FORMAT(15X,58HMASS DEPOSITED (KGM/M**2) BY PARTICLES IN THE SIZE RMAPX  68
     1ANGE  ,F12.5,4H TO ,F12.5, 9H MICRONS.)                           MAPX  69
 28   FORMAT(15X,73HH+1 HOUR NORMALIZED DOSE RATE RESULTING FROM PARTICLMAPX  70
     1ES IN THE SIZE RANGE ,F12.5,4H TO ,F12.5,9H MICRONS.)             MAPX  71
C                                                                       MAPX  72
C ***********************************************************************MAPX  73
C ***********************************************************************MAPX  74
C                                                                       MAPX  75
      DATA BITLUM,INC,LREW/ 6HMULTIB,19,0/                              MAPX  76
C                                                                       MAPX  77
      IF(MAPRUN) 101,100,101                                            MAPX  78
 100  TINC=5.0*DGX                                                      MAPX  79
      XCORD=XMIN+DGX                                                    MAPX  80
      VINC=INC                                                          MAPX  81
      XCINC=VINC*DGX                                                    MAPX  82
      KKL=NBZX2+1                                                       MAPX  83
      NX=NXMAP-NBZX2-NBZX2                                              MAPX  84
C     LEFT IS USED HERE AS A TEMPORARY STORAGE                          MAPX  85
      LEFT=(XMAX-X2)/DGX                                                MAPX  86
C     PRINT MAP TITLE                                                   MAPX  87
      WRITE (ISOUT,7)                                                   MAPX  88
C     SELECT APPROPRIATE DISPLAY OPTION CODE                            MAPX  89
      IF(JC(1))147,147,131                                              MAPX  90
 131  IF(JC(1)-6)132,132,147                                            MAPX  91
 130  JC(1)=1                                                           MAPX  92
 132  N1=JC(1)                                                          MAPX  93
      GO TO (141,142,143,144,145,146),N1                                MAPX  94
 141  ASSIGN 150 TO N2                                                  MAPX  95
      WRITE (ISOUT,3)                                                   MAPX  96
      GO TO 102                                                         MAPX  97
 142  ASSIGN 151 TO N2                                                  MAPX  98
      WRITE (ISOUT,5)                                                   MAPX  99
      GO TO 102                                                         MAPX 100
 143  WRITE(ISOUT,19)                                                   MAPX 101
      ASSIGN 301 TO N2                                                  MAPX 102
      IF(LREW.NE.0) GO TO 1431                                          MAPX 103
      LREW=1                                                            MAPX 104
      REWIND MBTAPE                                                     MAPX 105
 1431 WRITE (MBTAPE)BITLUM                                              MAPX 106
      WRITE(MBTAPE)XMIN,XMAX,YMIN,YMAX,DGX,DGY                          MAPX 107
      GO TO 102                                                         MAPX 108
C                                                                       MAPX 109
C*********************** CODE INSERTION POINTS ************************MAPX 110
 144  CONTINUE                                                          MAPX 111
 145  CONTINUE                                                          MAPX 112
 146  CONTINUE                                                          MAPX 113
C*********************** CODE INSERTION POINTS ************************MAPX 114
C                                                                       MAPX 115
 147  WRITE (ISOUT,6)N1                                                 MAPX 116
      GO TO 130                                                         MAPX 117
 101  KKL=1                                                             MAPX 118
      NX=NXMAP-NBZX2                                                    MAPX 119
```

```
C     LEFT IS USED HERE AS A TEMPORARY STORAGE                          MAPX 120
      LEFT=(XMAX-X1)/DGX                                                MAPX 121
      GO TO 1702                                                        MAPX 122
C 102   PRINT ORDINATE DESCRIPTION                                      MAPX 123
C                                                                       MAPX 124
  102 WRITE (ISOUT,8)                                                   MAPX 125
      GO TO (161,162,163,164,165,166,167,168,169,171,172,173,174,175,176MAPX 126
     1,177,178,179,170,170),NREQ                                        MAPX 127
  161 WRITE (ISOUT,9)                                                   MAPX 128
      GO TO 170                                                         MAPX 129
  162 WRITE (ISOUT,10)                                                  MAPX 130
      GO TO 170                                                         MAPX 131
  163 WRITE (ISOUT,11)T1                                                MAPX 132
      GO TO 170                                                         MAPX 133
  164 WRITE (ISOUT,12)T1                                                MAPX 134
      GO TO 170                                                         MAPX 135
  165 WRITE (ISOUT,13)T1,T2                                             MAPX 136
      GO TO 170                                                         MAPX 137
  166 WRITE (ISOUT,14)                                                  MAPX 138
      GO TO 170                                                         MAPX 139
  167 WRITE (ISOUT,15)T1,T2                                             MAPX 140
      GO TO 170                                                         MAPX 141
  168 WRITE (ISOUT,13)T1,T2                                             MAPX 142
      WRITE(ISOUT,17)                                                   MAPX 143
      GO TO 170                                                         MAPX 144
  169 WRITE (ISOUT,12)T1                                                MAPX 145
      WRITE (ISOUT,17)                                                  MAPX 146
      GO TO 170                                                         MAPX 147
  171 WRITE (ISOUT,18)T1,MASCHN                                         MAPX 148
      WRITE(ISOUT,17)                                                   MAPX 149
      GO TO 170                                                         MAPX 150
  172 WRITE (ISOUT,23)                                                  MAPX 151
      GO TO 170                                                         MAPX 152
  173 WRITE (ISOUT,24)                                                  MAPX 153
      GO TO 170                                                         MAPX 154
  174 WRITE (ISOUT,25)                                                  MAPX 155
      GO TO 170                                                         MAPX 156
  175 WRITE (ISOUT,26)                                                  MAPX 157
      GO TO 170                                                         MAPX 158
  176 WRITE (ISOUT,27) T1,T2                                            MAPX 159
      GO TO 170                                                         MAPX 160
  177 WRITE (ISOUT,28) T1,T2                                            MAPX 161
      GO TO 170                                                         MAPX 162
C                                                                       MAPX 163
C*********************** CODE INSERTION POINTS ***********************MAPX 164
  178 CONTINUE                                                          MAPX 165
  179 CONTINUE                                                          MAPX 166
C*********************** CODE INSERTION POINTS ***********************MAPX 167
C                                                                       MAPX 168
  170 WRITE (ISOUT,20) XGZ,YGZ                                          MAPX 169
      IF(JC(1).EQ.3)  GO TO 1702                                        MAPX 170
C                                                                       MAPX 171
C     PRINT A PAIR OF PASTE-ON Y SCALES HERE                            MAPX 172
      WRITE (ISOUT,21)                                                  MAPX 173
      YY=YMIN+DGY*FLOAT(NYMAP)                                          MAPX 174
      DO 1701  J=1,NYMAP                                                MAPX 175
      WRITE (ISOUT,22)YY,YY                                             MAPX 176
 1701 YY=YY-DGY                                                         MAPX 177
 1702 IF(LEFT-NX) 1021,1022,1022                                        MAPX 178
 1021 NX=LEFT                                                           MAPX 179
```

```
 1022 MM=NX/(INC)                                                       MAPX 180
      M=MM+1                                                            MAPX 181
C     LEFT IS USED HERE AS THE NUMBER OF PRINT COLUMNS IN THE LAST      MAPX 182
C     PRINTER STRIP                                                     MAPX 183
      LEFT=NX-MM*(INC)                                                  MAPX 184
C                                                                       MAPX 185
C     STRIPS                                                            MAPX 186
      DO 110 ISTRIP=1,M                                                 MAPX 187
      MAPRUN=MAPRUN+1                                                   MAPX 188
      IF (JC(1).EQ.3)  GO TO 1023                                       MAPX 189
      XC2=XCORD+TINC                                                    MAPX 190
      XC3=XC2+TINC                                                      MAPX 191
      WRITE (ISOUT,1)MAPRUN                                             MAPX 192
      WRITE (ISOUT,16)XCORD,XC2,XC3                                     MAPX 193
 1023 KL=KKL+(NYMAP-1)*NXMAP                                            MAPX 194
      IF(ISTRIP-M)103,104,103                                           MAPX 195
 104  KINC=LEFT-1                                                       MAPX 196
      VLEFT=LEFT                                                        MAPX 197
      XCIN=VLEFT*DGX                                                    MAPX 198
      GO TO 1031                                                        MAPX 199
 103  KINC=INC-1                                                        MAPX 200
      XCIN=XCINC                                                        MAPX 201
 1031 CONTINUE                                                          MAPX 202
      KLINK = KINC+1                                                    MAPX 203
      IF(JC(1).EQ.3) WRITE(MBTAPE)NYMAP,KLINK                           MAPX 204
C                                                                       MAPX 205
C     ROWS                                                              MAPX 206
      DO 200 J=1,NYMAP                                                  MAPX 207
      KH=KL+KINC                                                        MAPX 208
      KDC=0                                                             MAPX 209
      DO 201 K=KL,KH                                                    MAPX 210
 201  FSUM=FSUM+DMAP(K)                                                 MAPX 211
C                                                                       MAPX 212
C     NUMBERS WITHIN ROWS                                               MAPX 213
      DO 300 K=KL,KH                                                    MAPX 214
      KDC=KDC+1                                                         MAPX 215
C     TRANSFER TO CODE FOR SELECTED PRESENTATION                        MAPX 216
      GO TO N2,(150,151,301)                                            MAPX 217
C                                                                       MAPX 218
C 150 CODE FOR POWER OF TEN DISPLAY                                     MAPX 219
 150  IF(DMAP(K))105,106,107                                            MAPX 220
 105  ASSIGN 121 TO N3                                                  MAPX 221
      DMAP(K)=-DMAP(K)                                                  MAPX 222
      GO TO 109                                                         MAPX 223
 107  ASSIGN 300 TO N3                                                  MAPX 224
 109  H = ALOG10(DMAP(K))                                               MAPX 225
      H1=AMAX0(H+1.0)                                                   MAPX 226
      JMAP(KDC)=H-H1                                                    MAPX 227
      IF(JMAP(KDC).EQ.0)JMAP(KDC)=0                                     MAPX 228
      DMAP(K)=10.0**H1                                                  MAPX 229
      IF(DMAP(K)-0.999)115,115,1091                                     MAPX 230
 1091 DMAP(K)=DMAP(K)/10.0                                              MAPX 231
      JMAP(KDC)=JMAP(KDC)+1                                             MAPX 232
      GO TO 115                                                         MAPX 233
 106  JMAP(KDC)=0                                                       MAPX 234
      GO TO 300                                                         MAPX 235
 115  GO TO N3,(300,121)                                                MAPX 236
C 121  RESET SIGN OF MAP COORDINATE                                     MAPX 237
 121  DMAP(K)=-DMAP(K)                                                  MAPX 238
      GO TO 300                                                         MAPX 239
```

```
C                                                                       MAPX 240
C 151 CØDE FØR TWØ-LINE F11.3 DISPLAY                                   MAPX 241
 151  JMAP(KDC)=ØMAP(K)/10.0                                            MAPX 242
      ZMAP=JMAP(KDC)                                                    MAPX 243
      ØMAP(K)=ØMAP(K)-(ZMAP*10.0)                                       MAPX 244
 300  CØNTINUE                                                          MAPX 245
      WRITE (ISØUT,2)(JMAP(K),K=1,                                      MAPX 246
      WRITE (ISØUT,4)(ØMAP(K),K=KL,KH)                                  MAPX 247
      GØ TØ 200                                                         MAPX 248
 301  WRITE (MBTAPE) (ØMAP(K),K=KL,KH)                                  MAPX 249
 200  KL=KL-NXMAP                                                       MAPX 250
      IF (JC(1).EQ.2)  GØ TØ 110                                        MAPX 251
      WRITE (ISØUT,16)XCØØRD,XC2,XC3                                    MAPX 252
      XCØØRD=XCØØRD+XCIN                                                MAPX 253
 110  KKL=KKL+INC                                                       MAPX 254
      RETURN                                                            MAPX 255
      END                                                               MAPX 256
```

```
$IBFTC PRC     LIST,DECK,M94/2                                          PRC    0
      SUBRØUTINE PRØC                                                   PRC    1
C     26 FEB 67                                                         PRC    2
C     P. FLUSSER  TECHNICAL ØPERATIØNS RESEARCH  SR  PRØC               PRC    3
C***THIS SUBRØUTINE CØMPUTES A NUMBER, KTR(I), WHICH DETERMINES         PRC    4
C***INTØ WHICH ZØNE ØR BUFFER  ZØNE THE I TH PARTICLE HAS LANDED.       PRC    5
C*** IT SETS KTR(I)=0 IF THE I TH PARTICLE LANDED IN THE FIRST ZØNE,    PRC    6
C*** AND CALLS SUBRØUTINE CALC TØ CØMPUTE THE CØNTRIBUTIØN TØ THE       PRC    7
C*** FINAL RESULT ØF THIS PARTICLE.  IT ALSØ CØMPUTES A NEW VALUE FØR   PRC    8
C*** FØR NE, THE NUMBER ØF EMPTY SPACES IN THE PARTICLE ARRAY.          PRC    9
C*** FINALLY, THE NUMBER ØF PARTICLES THAT HAVE FALLEN IN EACH ZØNE     PRC   10
C*** IS CØMPUTED  (NP(I)).                                              PRC   11
C                                                                       PRC   12
C ***********************************************************************PRC   13
C                                                                       PRC   14
      CØMMØN /SET1/                                                     PRC   15
     1        DIAM    ,DETID(12),IRISE  , IEXEC  , ISIN   , ISØUT    ,  PRC   16
     2        SD      , SPAR    , SSAM  , TME    , TMP1   , TMP2      ,  PRC   17
     3        T2M     , U       , VPR   , W      , HBURST , SCLDHB    ,  PRC   18
     4        TID(40), RMIN     , IDISTR , SPAR1  , MBTAPE , FSUM      ,  PRC   19
     5        SPAR4   , SPAR5   , SPAR6 , SPAR7  , SPAR8  , SPAR9       PRC   20
      CØMMØN  /SET3/                                                    PRC   21
     1    BZ            ,BZ2            ,BZZ            ,BZZ2           PRC   22
     2   ,DELTAX        ,DGX            ,DGY            ,DIFCØN         PRC   23
     3   ,DIFADJ        ,FMAS(500)      ,FMASS(200)     ,IC(18)         PRC   24
     4   ,ICØN          ,ICTR           ,IH             ,IØT(18)        PRC   25
     5   ,IP            ,IPØUT          ,ITT(18)        ,IV             PRC   26
     6   ,JC(18)        ,JIN            ,JØUT           ,JPØUT          PRC   27
     7   ,KTR(500)      ,KTAPE          ,LAST           ,MAPRUN         PRC   28
     8   ,MARRAY        ,MIN            ,MXREQ                          PRC   29
     9   ,N             ,NA             ,NBZX           ,NBZX2          PRC   30
     1   ,NBZY          ,NCL            ,NE             ,NF             PRC   31
     2   ,NIJ           ,NMAP           ,NMAX           ,NØX            PRC   32
     3   ,NP(21)        ,NREQ           ,NS             ,NTAPES         PRC   33
     4   ,NTAPET        ,NTASK          ,NXMAP          ,NYMAP          PRC   34
     5   ,YMIN          ,PS(500)        ,PSIZE(200)     ,PACT(200)      PRC   35
     6   ,RØPART        ,SV(200)        ,T(500)         ,T1             PRC   36
     7   ,T2            ,TLIMIT         ,X(500)         ,XF             PRC   37
     8   ,XØ            ,XMAX           ,XMIN           ,XNMAP          PRC   38
     9   ,X1            ,X2             ,X3             ,X4             PRC   39
     1   ,Y(500)        ,YF             ,YØ             ,YMAX           PRC   40
      CØMMØN /SET4/  ØMAP(4000)                                         PRC   41
C                                                                       PRC   42
C ***********************************************************************PRC   43
C                                                                       PRC   44
      DATA PRØGRM/6H PRØC /                                             PRC   45
C                                                                       PRC   46
C ***********************************************************************PRC   47
                                                                        PRC   48
C     NGØNE IS THE NUMBER ØF PARTICLES DISCARDED                        PRC   49
      IF(ICTR) 1,1,2                                                    PRC   50
C     INTØ ØR NEAR ENØUGH TØ THE AREA ØF INTEREST                       PRC   51
    1 JCTR = 0                                                          PRC   52
      DØ 107 I=1,NIJ                                                    PRC   53
      IF(X(I)-XØ) 107,108,108                                           PRC   54
  108 IF(XF-X(I)) 107,109,109                                           PRC   55
  109 IF(Y(I)-YØ) 107,110,110                                           PRC   56
  110 IF(YF-Y(I)) 107,111,111                                           PRC   57
  111 JCTR=JCTR+1                                                       PRC   58
      X(JCTR)=X(I)                                                      PRC   59
```

```
      V(JCTR)=V(I)                                                      PRC   60
      T(JCTR)=T(I)                                                      PRC   61
      PS(JCTR)=PS(I)                                                    PRC   62
      FMAS(JCTR)=FMAS(I)                                                PRC   63
  107 CØNTINUE                                                          PRC   64
C     NGØNE IS THE NUMBER ØF PARTICLES DISCARDED                        PRC   65
      NGØNE=NIJ-JCTR                                                    PRC   66
      IF(NGØNE) 20,2,52                                                 PRC   67
 20   IRRØR=-20                                                         PRC   68
      GØ TØ 7734                                                        PRC   69
   52 JPTR=JCTR+1                                                       PRC   70
      BIG=XØ-1.0                                                        PRC   71
      DØ 104 I=JPTR,NIJ                                                 PRC   72
      KTR(I)=0                                                          PRC   73
  104 X(I)=BIG                                                          PRC   74
      NE=NE+NGØNE                                                       PRC   75
      NIJ=JCTR                                                          PRC   76
      IF(JCTR)21,15,2                                                   PRC   77
 21   IRRØR=-21                                                         PRC   78
 7734 CALL ERRØR(PRØGRM,IRRØR,ISØUT)                                    PRC   79
C ***** END ØF PARTICLE (CLØUD SUBDIVISIØN) DISCARDING CØDE *********  PRC   80
    2 DØ 9 I=1,NIJ                                                      PRC   81
      R=X(I)-X1                                                         PRC   82
      K=JIN+2                                                           PRC   83
      DØ 8 J=2,K,2                                                      PRC   84
      R=R-BZ2                                                           PRC   85
      IF(R) 3,3,6                                                       PRC   86
    3 IF(J-2) 4,4,5                                                     PRC   87
    4 KTR(I)=0                                                          PRC   88
   10 NE=NE+1                                                           PRC   89
   11 IP=I                                                              PRC   90
      CALL CALC                                                         PRC   91
      GØ TØ 9                                                           PRC   92
    5 KTR(I)=J-3                                                        PRC   93
      NP(J-3)=NP(J-3)+1                                                 PRC   94
      IF(J-4)22,25,9                                                    PRC   95
 22   IRRØR=-22                                                         PRC   96
      GØ TØ 7734                                                        PRC   97
    6 R=R-DELTAX                                                        PRC   98
      IF(R) 7,7,8                                                       PRC   99
    7 KTR(I)=J-2                                                        PRC  100
      IF(J-2) 10,10,12                                                  PRC  101
   12 NP(J-2)=NP(J-2)+1                                                 PRC  102
      GØ TØ 9                                                           PRC  103
   25 KTR(I)=2                                                          PRC  104
      GØ TØ 11                                                          PRC  105
    8 CØNTINUE                                                          PRC  106
      KTR(I)=JIN                                                        PRC  107
      NP(JIN)=NP(JIN)+1                                                 PRC  108
    9 CØNTINUE                                                          PRC  109
   15 RETURN                                                            PRC  110
      END                                                               PRC  111
```

```
$IBFTC RNN1     LIST,DECK,M94/2                                         RNN1   0
      SUBRØUTINE RUN1                                                   RNN1   1
C     26  FEB  67                                                       RNN1   2
C     P. FLUSSER  TECHNICAL ØPERATIØNS RESEARCH  SR  RUN1               RNN1   3
C                                                                       RNN1   4
C***THIS SUBRØUTINE IS CALLED IF AND ØNLY IF ALL THE PARTICLES THAT     RNN1   5
C***ARE ØN THE TAPE WHICH WILL BE READ NEXT EITHER FALL INTØ            RNN1   6
C*** THE AREA CURRENTLY BEING CØNSIDERED ØR CAN BE DISCARDED            RNN1   7
C*** ALTØGETHER.  THIS SUBRØUTINE CALLS CALC WHICH THEN CØMPUTES        RNN1   8
C*** THE CURRENT REQUEST.                                               RNN1   9
C                                                                       RNN1  10
C ***********************************************************************RNN1  11
C                                                                       RNN1  12
      CØMMØN /SET1/                                                     RNN1  13
     1        DIAM    ,DETID(12),IRISE  , IEXEC  , ISIN   , ISØUT     , RNN1  14
     2        SD      , SPAR    , SSAM   , TME    , TMP1   , TMP2      , RNN1  15
     3        T2M     , U       , VPR    , W      , HBURST , SCLDHB    , RNN1  16
     4        TID(40), RMIN     , IDISTR , SPAR1  , MBTAPE , FSUM      , RNN1  17
     5        SPAR4   , SPAR5   , SPAR6  , SPAR7  , SPAR8  , SPAR9     RNN1  18
      CØMMØN  /SET3/                                                    RNN1  19
     1    BZ              ,BZZ            ,BZZ            ,BZ22          RNN1  20
     2   ,DELTAX          ,DGX            ,DGY            ,DIFCØN        RNN1  21
     3   ,DIFADJ          ,FMAS(500)      ,FMASS(200)     ,IC(18)        RNN1  22
     4   ,ICØN            ,ICTR           ,IH             ,IØT(18)       RNN1  23
     5   ,IP              ,IPØUT          ,ITT(18)        ,IV            RNN1  24
     6   ,JC(18)          ,JIN            ,JØUT           ,JPØUT         RNN1  25
     7   ,KTR(500)        ,KTAPE          ,LAST           ,MAPRUN        RNN1  26
     8   ,MARRAY          ,MIN            ,MXREQ                         RNN1  27
     9   ,N               ,NA             ,NBZX           ,NBZX2         RNN1  28
     1   ,NBZY            ,NCL            ,NE             ,NF            RNN1  29
     2   ,NIJ             ,NMAP           ,NMAX           ,NØX           RNN1  30
     3   ,NP(21)          ,NREQ           ,NS             ,NTAPES        RNN1  31
     4   ,NTAPET          ,NTASK          ,NXMAP          ,NYMAP         RNN1  32
     5   ,YMIN            ,PS(500)        ,PSIZE(200)     ,PACT(200)     RNN1  33
     6   ,RØPART          ,SV(200)        ,T(500)         ,T1            RNN1  34
     7   ,T2              ,TLIMIT         ,X(500)         ,XF            RNN1  35
     8   ,XØ              ,XMAX           ,XMIN           ,XNMAP         RNN1  36
     9   ,X1              ,X2             ,X3             ,X4            RNN1  37
     1   ,Y(500)          ,YF             ,YØ             ,YMAX          RNN1  38
      CØMMØN /SET4/  ØMAP(4000)                                         RNN1  39
C                                                                       RNN1  40
C ***********************************************************************RNN1  41
C                                                                       RNN1  42
      DATA PRØGRM/6H RUN1 /                                             RNN1  43
C                                                                       RNN1  44
C ***********************************************************************RNN1  45
C ***********************************************************************RNN1  46
C                                                                       RNN1  47
C*** ARE THERE ANY CURRENT PARTICLES LEFT IN CØRE...                    RNN1  48
C*** HAVE THØSE PARTICLES WHICH FALL ØUTSIDE THE AREA ØF INTEREST       RNN1  49
C***BEEN DISCARDED...                                                   RNN1  50
 10   IF(ICTR)2,3,4                                                     RNN1  51
 2    IRRØR=-2                                                          RNN1  52
 7734 CALL ERRØR(PRØGRM,IRRØR,ISØUT)                                    RNN1  53
 3    ASSIGN 200 TØ N                                                   RNN1  54
      GØ TØ 5                                                           RNN1  55
C***ARE THERE ANY CURRENT PARTICLES LEFT IN CØRE...                     RNN1  56
 4    IF(NIJ)41,42,42                                                   RNN1  57
 41   ASSIGN 200 TØ N                                                   RNN1  58
      NIJ=MARRAY                                                        RNN1  59
```

```
      GO TO 43                                                          RNN1  60
 42   ASSIGN 100 TO N                                                   RNN1  61
 5    READ (IPOUT)NIJ                                                   RNN1  62
      IF(NIJ) 6,7,8                                                     RNN1  63
C***ARE WE DONE...                                                      RNN1  64
 6    IERROR=-6                                                         RNN1  65
      GO TO 7734                                                        RNN1  66
 8    READ (IPOUT)(X(I),Y(I),T(I),PS(I),FMAS(I),I=1,NIJ)                RNN1  67
 43   DO 300 I=1,NIJ                                                    RNN1  68
C***PRELIMINARY CHECK OF PARTICLES                                      RNN1  69
      GO TO N,(100,200)                                                 RNN1  70
 200  IF(X(I)-X1)300,201,201                                            RNN1  71
 201  IF(X(I)-X4)202,202,300                                            RNN1  72
 202  IF(Y(I)-Y0)300,203,203                                            RNN1  73
 203  IF(Y(I)-YF)100,100,300                                            RNN1  74
 100  IP=I                                                              RNN1  75
      CALL CALC                                                         RNN1  76
 300  CONTINUE                                                          RNN1  77
      GO TO 10                                                          RNN1  78
 7    RETURN                                                            RNN1  79
      END                                                               RNN1  80
```

```
$IBFTC SHIF    LIST,DECK,M94/2
      SUBRØUTINE SHIFT
C     26  FEB  67
C     P. FLUSSER  TECHNICAL ØPERATIØNS RESEARCH  SR  SHIFT
C     THIS SUBRØUTINE WRITES ØN THE APPRØPRIATE TAPE THE PARTICLE
C     PARAMETERS ØF THØSE PARTICLES WHICH FALL IN THE MØST DENSELY
C     PØPULATED ZØNE ØF THE AREA ØF INTEREST.  IT ALSØ CØMPUTES A NEW
C     VALUE ØF NE, THE NUMBER ØF EMPTY SPACES IN THE PARTICLE ARRAY.
C
C ***********************************************************************
C
C     NS      = NUMBER ØF PARTICLES TØ BE WRITTEN ØUT
C     NE      = NUMBER ØF EMPTY SPEACES CURRENTLY AVAILABLE
C     KTR(I) = INDEX INDICATING INTØ WHICH ZØNE THE I TH PARTICLE HAS
C             LANDED
C     JØUT    = INDEX ØF ZØNE TØ BE WRITTEN ØUT
C     X,Y,T,ID,PSI,  =  PARTICLE PARAMETERS
C     IØT(JØUT/2) = TAPE NUMBER ØF TAPE TØ BE USED IN CURRENT WRITE
C     KTAPE        = TAPE NUMBER ØF TAPE TØ BE USED IN CURRENT WRITE
C     JIN     = LARGEST INDEX APPEARING IN PARTICLE CLASSIFICATIØN
C     NMAX    = MAXIMIM NUMBER ØF UNSØRTED PARTICLES TØ BE WRITTEN  ØUT
C               IN ØNE DATA BLØCK
C     JT      = TØP CØUNTER
C     JB      = BØTTØM CØUNTER
C
C ***********************************************************************
C
C     IF NTH,NBH ØR NTPH ARE ZERØ, THERE IS A HØLE IN THE TØP, BØTTØM ØR
C     TEMPØRARY STØRAGE RESPECTIVELY.  IF THESE VARIABLES ARE 1,
C     THERE IS NØ HØLE THERE
C     NHCTR = INDEX KELPING TRACK ØF SPACE AVAILABLE FØR INSERTIØN ØF
C              CØNTENTS ØF TEMPØRARY STØRAGE AT THE END ØF EXECUTIØN.
C     NP(I)  = NUMBER ØF PARTICLES WITH CLASSIFICATIØN NUMBER I
C     IF LAST=0, THE LAST ZØNE HAS BEEN SØRTED.  IF LAST=1 THIS STILL
C     NEEDS TØ BE DØNE.
C     MARRAY = DIMENSIØN ØF PARTICLE ARRAY
C
C ***********************************************************************
C
      CØMMØN /SET1/
     1        DIAM    ,DETID(12),IRISE  , IEXEC  , ISIN   , ISØUT     ,
     2        SD      , SPAR    , SSAM   , TME    , TMP1   , TMP2      ,
     3        T2M     , U       , VPR    , W      , HBURST , SCLDHB    ,
     4        TID(40), RMIN    , IDISTR , SPAR1  , MBTAPE , FSUM      ,
     5        SPAR4   , SPAR5   , SPAR6  , SPAR7  , SPAR8  , SPAR9
      CØMMØN  /SET3/
     1    BZ              ,BZ2            ,BZZ            ,BZ22
     2   ,DELTAX          ,DGX            ,DGY            ,DIFCØN
     3   ,DIFADJ          ,FMAS(500)      ,FMASS(200)     ,IC(18)
     4   ,ICØN            ,ICTR           ,IH             ,IØT(18)
     5   ,IP              ,IPØUT          ,ITT(18)        ,IV
     6   ,JC(18)          ,JIN            ,JØUT           ,JPØUT
     7   ,KTR(500)        ,KTAPE          ,LAST           ,MAPRUN
     8   ,MARRAY          ,MIN            ,MXREQ
     9   ,N               ,NA             ,NBZX           ,NBZX2
     1   ,NBZY            ,NCL            ,NE             ,NF
     2   ,NIJ             ,NMAP           ,NMAX           ,NØX
     3   ,NP(21)          ,NREQ           ,NS             ,NTAPES
     4   ,NTAPET          ,NTASK          ,NXMAP          ,NYMAP
     5   ,YMIN            ,PS(500)        ,PSIZE(200)     ,PACT(200)
```

```
     6   ,RØPART        ,SV(200)       ,T(500)        ,T1            SHIF  60
     7   ,T2            ,TLIMIT        ,X(500)        ,XF            SHIF  61
     8   ,XØ            ,XMAX          ,XMIN          ,XNMAP         SHIF  62
     9   ,X1            ,X2            ,X3            ,X4            SHIF  63
     1   ,Y(500)        ,YF            ,YØ            ,YMAX          SHIF  64
      CØMMØN /SET4/  ØMAP(4000)                                      SHIF  65
C                                                                    SHIF  66
C ******************************************************************SHIF  67
C                                                                    SHIF  68
      DATA PRØGRM/6H SHIFT/                                          SHIF  69
C                                                                    SHIF  70
C ******************************************************************SHIF  71
C ******************************************************************SHIF  72
C                                                                    SHIF  73
C     ARE WE SØRTING THE LAST ZØNE ... 3=NØ, 6=YES                   SHIF  74
      IF(LAST) 3,3,60                                                SHIF  75
C  60 ARE WE DUMPING LAST ZØNE ... 5=YES, 3=NØ                       SHIF  76
   60 IF(JØUT-JIN) 3,3,6                                             SHIF  77
 6    IRRØR=-6                                                       SHIF  78
      GØ TØ 7734                                                     SHIF  79
C     SET UP CØUNTERS                                                SHIF  80
    3 JT = 1                                                         SHIF  81
      JB = MARRAY                                                    SHIF  82
      NTH=1                                                          SHIF  83
      NBH=1                                                          SHIF  84
      NTPH=0                                                         SHIF  85
      NHCTR=0                                                        SHIF  86
C    IS THERE A HØLE IN THE TØP ))) IF YES, EXAMINE BØTTØM)          SHIF  87
   10 IF(KTR(JT)) 9,12,11                                            SHIF  88
 9    IRRØR=-9                                                       SHIF  89
 7734 CALL ERRØR(PRØGRM,IRRØR,ISØUT)                                 SHIF  90
   12 NTH=0                                                          SHIF  91
      GØ TØ 15                                                       SHIF  92
C     IS JT TH PARTICLE TØ BE DUMPED ... IF YES, EXAMINE NEXT TØ     SHIF  93
C     PARTICLE, IF NØT, EXAMINE BØTTØM PARTICLE)                     SHIF  94
   11 IF(KTR(JT)-JØUT) 14,13,14                                      SHIF  95
C*** THIS PARTICLE DØES NØT FALL IN BUFFER ZØNE.  ZERØ ØUT           SHIF  96
C***IDENTIFICATIØN NUMBER.                                           SHIF  97
   13 KTR(JT)=0                                                      SHIF  98
      GØ TØ 777                                                      SHIF  99
   14 IF(KTR(JT)-1-JØUT) 15,16,15                                    SHIF 100
C*** THIS PARTICLE FALLS IN BUFFER ZØNE.  IT NEEDS TØ BE BØTH        SHIF 101
C*** WRITTEN ØUT AND RETAINED.  INCREASE IDENTIFICATIØN NUMBER       SHIF 102
C*** BY ØNE.                                                         SHIF 103
   16 KTR(JT)=KTR(JT)+1                                              SHIF 104
  777 JT=JT+1                                                        SHIF 105
      IF(JT-NS) 10,10,40                                             SHIF 106
C     IS THERE A HØLE IN THE BØTTØM... IF YES, SEE IF THERE IS       SHIF 107
C     PARTICLE THAT WANTS TØ CØME DØWN FRØM THE TØP.  IF NØT, EXAMINE SHIF 108
C     PARTICLE.                                                      SHIF 109
   15 IF(NPH) 17,18,17                                               SHIF 110
C     DOES PARTICLE WANT TØ BE DUMPED... IF YES, MØVE IT TØ THE TØP, I SHIF 111
C     NØT, EXAMINE NEXT BØTTØM PARTICLE                              SHIF 112
   17 IF(KTR(JB)) 20,19,20                                           SHIF 113
   19 NBH=0                                                          SHIF 114
   18 IF(NTH) 78,888,78                                              SHIF 115
C     MØVE TØP TØ BØTTØM                                             SHIF 116
   78 X(JB)=X(JT)                                                    SHIF 117
      Y(JB)=Y(JT)                                                    SHIF 118
      T(JB)=T(JT)                                                    SHIF 119
```

```
      PS(JB)=PS(JT)                                                     SHIF 120
      FMAS(JB)=FMAS(JT)                                                 SHIF 121
      KTR(JB)=KTR(JT)                                                   SHIF 122
      NTH=0                                                             SHIF 123
      NBH=1                                                             SHIF 124
C     ARE WE FINISHED .. IF NOT, CONTINUE,  IF YES, DUMP PARTICLES      SHIF 125
C     COMPUTE A NEW VALUE FOR NE                                        SHIF 126
C*** ARE WE DONE...                                                     SHIF 127
  888 JB=JB-1                                                           SHIF 128
      IF(JB-NS) 40,17,17                                                SHIF 129
   20 IF(KTR(JB)-JOUT) 24,23,24                                         SHIF 130
C*** THIS PARTICLE DOES NOT FALL IN BUFFER ZONE.                        SHIF 131
C*** XERO OUT IDENTIFICATION NUMBER.                                    SHIF 132
   23 KTR(JB)=0                                                         SHIF 133
      GO TO 26                                                          SHIF 134
   24 IF(KTR(JB)-1-JOUT) 888,25,888                                     SHIF 135
C*** THIS PARTICLE FALLS IN BUFFER ZONE2.. IT NEEDS TO BE BOTH          SHIF 136
C*** WRITTEN OUT AND RETAINED.  INCREASE ID. NO. BY ONE.                SHIF 137
   25 KTR(JB)=KTR(JB)+1                                                 SHIF 138
   26 IF(NTH) 27,87,27                                                  SHIF 139
   27 IF(NTPH) 30,77,30                                                 SHIF 140
 30   IRROR=-30                                                         SHIF 141
      GO TO 7734                                                        SHIF 142
C     MOVE TOP TO TEMPORARY STORAGE                                     SHIF 143
   77 XEMP=X(JT)                                                        SHIF 144
      YEMP=Y(JT)                                                        SHIF 145
      TEMP=T(JT)                                                        SHIF 146
      PEMP=PS(JT)                                                       SHIF 147
      FEMP=FMAS (JT)                                                    SHIF 148
      KEMP=KTR(JT)                                                      SHIF 149
      NTPH=1                                                            SHIF 150
C     MOVE BOTTOM TO TOP                                                SHIF 151
   87 X(JT)=X(JB)                                                       SHIF 152
      Y(JT)=Y(JB)                                                       SHIF 153
      T(JT)=T(JB)                                                       SHIF 154
      PS(JT)=PS(JB)                                                     SHIF 155
      FMAS(JT)=FMAS(JB)                                                 SHIF 156
      KTR(JT)=KTR(JB)                                                   SHIF 157
C*** TO AVOID DUPLICATION OF PARTICLES, ZERO OUT IDENTIFICATION         SHIF 158
C*** NUMBER.                                                            SHIF 159
      KTR(JB)=0                                                         SHIF 160
      NBH=0                                                             SHIF 161
      NTH=1                                                             SHIF 162
C*** KEEP TRACK OF EMPTY SPACE IN BOTTOM                                SHIF 163
      NHCTR=JB                                                          SHIF 164
      GO TO 777                                                         SHIF 165
   40 IF(NTPH) 67,5000,67                                               SHIF 166
C*** MOVE TEMPORARY STORAGE TO BOTTOM.                                  SHIF 167
   67 X(NHCTR)=XEMP                                                     SHIF 168
      Y(NHCTR)=YEMP                                                     SHIF 169
      T(NHCTR)=TEMP                                                     SHIF 170
      PS(NHCTR)=PEMP                                                    SHIF 171
      FMAS(NHCTR)=FEMP                                                  SHIF 172
      KTR(NHCTR)=KEMP                                                   SHIF 173
 5000 WRITE (KTAPE)NS                                                   SHIF 174
      WRITE (KTAPE)(X(I),Y(I),T(I),PS(I),FMAS(I),I=1,NS)                SHIF 175
C*** ADJUST THE NUMBER OF EMPTIES AND THE PARTICLE COUNT                SHIF 176
      IF(JOUT-2) 100,102,101                                            SHIF 177
 100  IRROR=-100                                                        SHIF 178
      GO TO 7734                                                        SHIF 179
```

```
 102 NE=NE+NP(1)+NP(2)                                          SHIF 180
     NP(1)=0                                                    SHIF 181
     GO TO 110                                                  SHIF 182
 101 IF(JOUT-JIN) 103,103,105                                   SHIF 183
105  IERROR=-105                                                SHIF 184
     GO TO 7734                                                 SHIF 185
 103 NE=NE+NP(JOUT)                                             SHIF 186
 110 NP(JOUT+2)=NP(JOUT+2)+NP(JOUT+1)                           SHIF 187
     NP(JOUT+1)=0                                               SHIF 188
     NP(JOUT)=0                                                 SHIF 189
 120 RETURN                                                     SHIF 190
     END                                                        SHIF 191
```

```
$IBFTC SLID    LIST,DECK,M94/2                                          SLID   0
      SUBROUTINE SLIDE                                                  SLID   1
C     P. FLUSSER   TECHNICAL OPERATIONS RESEARCH   SR  SLIDE            SLID   2
C     26 FEB 67                                                         SLID   3
C                                                                       SLID   4
C***SUBROUTINE SLIDE MOVES THE CONTENTS OF THE RIGHT BUFFER ZONE        SLID   5
C***INTO THE LEFT BUFFER ZONE AND ZEROS OUT THE REMAINING               SLID   6
C***ENTRIES IN THE MAP ARRAY.                                           SLID   7
C***NOX   = NUMBER OF OUTPUT GRID POINTS IN THE ZONE ITSELF             SLID   8
C***  COUNTING IN THE X DIRECTION.                                      SLID   9
C*** NBZX2=  NUMBER OF OUTPUT GRID POINTS IN THE BUFFER ZONE            SLID  10
C***       COUNTING IN THE X DIRECTION.                                 SLID  11
C*** NX=   NUMBER OF OUTPUT GRID POINTS IN THE ZONE ITSELF PLUS         SLID  12
C*** ONE BUFFER ZONE COUNTING IN THE X DIRECTION.                       SLID  13
C*** NXMAP= NUMBER OF OUTPUT GRID POINTS IN THE ENTIRE MAP ,COUNTING    SLID  14
C***TWO BUFFER ZONES) IN THE X DIRECTION.                               SLID  15
C*** NYMAP= NUMBER OF OUTPUT GRID POINTS IN ENTIRE MAP COUNTING         SLID  16
C*** IN Y DIRECTION.                                                    SLID  17
C*** PMAP= MAP STORAGE                                                  SLID  18
C                                                                       SLID  19
C ***********************************************************************SLID  20
C                                                                       SLID  21
      COMMON /SET1/                                                     SLID  22
     1        DIAM    ,DETID(12),IRISE  , IEXEC  , ISIN   , ISOUT     ,  SLID  23
     2        SD      , SPAR    , SSAM  , TME    , TMP1   , TMP2      ,  SLID  24
     3        T2M     , U       , VPR   , W      , HBURST , SCLDHB    ,  SLID  25
     4        TID(40), RMIN     , IDISTR , SPAR1  , MBTAPE , FSUM      ,  SLID  26
     5        SPAR4   , SPAR5   , SPAR6 , SPAR7  , SPAR8  , SPAR9      SLID  27
      COMMON  /SET3/                                                    SLID  28
     1    BZ            ,BZ2            ,BZZ            ,BZZ2           SLID  29
     2   ,DELTAX        ,DGX            ,DGY            ,DIFCON         SLID  30
     3   ,DIFADJ        ,FMAS(500)      ,FMASS(200)     ,IC(18)         SLID  31
     4   ,ICON          ,ICTR           ,IH             ,IOT(18)        SLID  32
     5   ,IP            ,IPOUT          ,ITT(18)        ,IV             SLID  33
     6   ,JC(18)        ,JIN            ,JOUT           ,JPOUT          SLID  34
     7   ,KTR(500)      ,KTAPE          ,LAST           ,MAPRUN         SLID  35
     8   ,MARRAY        ,MIN            ,MXREQ                          SLID  36
     9   ,N             ,NA             ,NBZX           ,NBZX2          SLID  37
     1   ,NBZY          ,NCL            ,NE             ,NF             SLID  38
     2   ,NIJ           ,NMAP           ,NMAX           ,NOX            SLID  39
     3   ,NP(21)        ,NREQ           ,NS             ,NTAPES         SLID  40
     4   ,NTAPET        ,NTASK          ,NXMAP          ,NYMAP          SLID  41
     5   ,YMIN          ,PS(500)        ,PSIZE(200)     ,PACT(200)      SLID  42
     6   ,REPART        ,SV(200)        ,T(500)         ,T1             SLID  43
     7   ,T2            ,TLIMIT         ,X(500)         ,XF             SLID  44
     8   ,XO            ,XMAX           ,XMIN           ,XNMAP          SLID  45
     9   ,X1            ,X2             ,X3             ,X4             SLID  46
     1   ,Y(500)        ,YF             ,YO             ,YMAX           SLID  47
      COMMON /SET4/  OMAP(4000)                                         SLID  48
C                                                                       SLID  49
C ***********************************************************************SLID  50
C ***********************************************************************SLID  51
C                                                                       SLID  52
      M=NBZX2+NOX                                                       SLID  53
      NX=M                                                              SLID  54
      N=0                                                               SLID  55
      DO 503 J=1,NYMAP                                                  SLID  56
      DO 501 K=1 ,NBZX2                                                 SLID  57
      NN=N+K                                                            SLID  58
      MM=M+K                                                            SLID  59
```

```
C*** SHIFT BUFFER ZØNE                                                  SLID  60
 501  ØMAP(NN)=ØMAP(MM)                                                 SLID  61
      L=N+NBZX2+1                                                       SLID  62
      LMN=L+NX-1                                                        SLID  63
      DØ 502 I=L,LMN                                                    SLID  64
C***  ZERØ ØUT WHATEVER IS LEFT                                         SLID  65
  502 ØMAP(I)=0.0                                                       SLID  66
      M=M+NXMAP                                                         SLID  67
  503 N=N+NXMAP                                                         SLID  68
      RETURN                                                            SLID  69
      END                                                               SLID  70
```

```
$IBFTC ZER      LIST,DECK,M94/2                                         ZER    0
      SUBROUTINE ZERO                                                   ZER    1
C     26  FEB  67                                                       ZER    2
C     P. FLUSSER  TECHNICAL OPERATIONS RESEARCH  SR  ZERO               ZER    3
C*** THIS SUBROUTINE MAKES ROOM FOR NIJ PARTICLES TO BE WRITTEN IN      ZER    4
C*** THE PARTICLE ARRAY BY MOVING THE PARTICLE PARAMETERS INTO THE BODY ZER    5
C***OF THE ARRAY.                                                       ZER    6
C*** JT= TOP COUNTER                                                    ZER    7
C*** JB= BOTTOM COUNTER                                                 ZER    8
C                                                                       ZER    9
C ***********************************************************************ZER   10
      COMMON /SET1/                                                     ZER   11
     1        DIAM    ,DETID(12),IRISE   , IEXEC   , ISIN    , ISOUT     , ZER   12
     2        SD      , SPAR    , SSAM   , TME     , TMP1    , TMP2      , ZER   13
     3        T2M     , U       , VPR    , W       , HBURST  , SCLDHB    , ZER   14
     4        TID(40) , RMIN    , IDISTR , SPAR1   , MBTAPE  , FSUM      , ZER   15
     5        SPAR4   , SPAR5   , SPAR6  , SPAR7   , SPAR8   , SPAR9      ZER   16
      COMMON  /SET3/                                                    ZER   17
     1    BZ            ,BZ2          ,BZZ          ,BZZ2                 ZER   18
     2   ,DELTAX        ,DGX          ,DGY          ,DIFCON               ZER   19
     3   ,DIFADJ        ,FMAS(500)    ,FMASS(200)   ,IC(18)               ZER   20
     4   ,ICON          ,ICTR         ,IH           ,IOT(18)              ZER   21
     5   ,IP            ,IPOUT        ,ITT(18)      ,IV                   ZER   22
     6   ,JC(18)        ,JIN          ,JOUT         ,JPOUT                ZER   23
     7   ,KTR(500)      ,KTAPE        ,LAST         ,MAPRUN               ZER   24
     8   ,MARRAY        ,MIN          ,MXREQ                              ZER   25
     9   ,N             ,NA           ,NBZX         ,NBZX2                ZER   26
     1   ,NBZY          ,NCL          ,NE           ,NF                   ZER   27
     2   ,NIJ           ,NMAP         ,NMAX         ,NOX                  ZER   28
     3   ,NP(21)        ,NREQ         ,NS           ,NTAPES               ZER   29
     4   ,NTAPET        ,NTASK        ,NXMAP        ,NYMAP                ZER   30
     5   ,YMIN          ,PS(500)      ,PSIZE(200)   ,PACT(200)            ZER   31
     6   ,ROPART        ,SV(200)      ,T(500)       ,T1                   ZER   32
     7   ,T2            ,TLIMIT       ,X(500)       ,XF                   ZER   33
     8   ,XO            ,XMAX         ,XMIN         ,XNMAP                ZER   34
     9   ,X1            ,X2           ,X3           ,X4                   ZER   35
     1   ,Y(500)        ,YF           ,Y2           ,YMAX                 ZER   36
      COMMON /SET4/  OMAP(4000)                                         ZER   37
      DATA PROGRM/6H ZERO /                                             ZER   38
      JT=1                                                              ZER   39
      JB=MARRAY                                                         ZER   40
C*** IS THERE A HOLE IN THE TOP... IF YES, GO ON, IF NOT, CHECK BOTTOM. ZER   41
 2    IF(KTR(J))3,4,5                                                   ZER   42
 3    IRROR=-3                                                          ZER   43
 7734 CALL ERROR(PROGRM,IRROR,ISOUT)                                    ZER   44
 4    JT=JT+1                                                           ZER   45
C*** ARE WE DONE...                                                     ZER   46
      IF(JT-NIJ)2,2,10                                                  ZER   47
C*** IS THERE HOLE IN THE BOTTOM... IF YES, MOVE A PARTICLE FROM THE    ZER   48
C*** TOP, IF NOT, TRY AND FIND ONE.                                     ZER   49
 5    IF(KTR(JB))6,7,5                                                  ZER   50
 6    IRROR=-6                                                          ZER   51
      GO TO 7734                                                        ZER   52
C*** MOVE PARTICLE PARAMETERS AND DECREMENT BOTTOM COUNTER.             ZER   53
 7    X(JB)=X(JT)                                                       ZER   54
      Y(JB)=Y(JT)                                                       ZER   55
      T(JB)=T(JT)                                                       ZER   56
      PS(JB)=PS(JT)                                                     ZER   57
      FMAS(JB)=FMAS(JT)                                                 ZER   58
      KTR(JB)=KTR(JT)                                                   ZER   59
```

```
      JB=JB-1                                                   ZER   60
      GØ TØ 4                                                   ZER   61
 8    JB=JB-1                                                   ZER   62
C*** ARE THERE ENØUGH HØLES....                                 ZER   63
      IF(JB-NIJ)9,9,5                                           ZER   64
 9    IRRØR=-9                                                  ZER   65
      GØ TØ 7734                                                ZER   66
 10   RETURN                                                    ZER   67
      END                                                       ZER   68
```

THE PRINTED OUTPUT OF THE PROGRAM

An example of the output is shown in the following pages. This consists of two parts: (1) a listing of the particles impacted tape (IPOUT) which is optional (see p. 49), and (2) a map. The map has been hand-contoured to show the limit of particle deposition (outside contour representing 0 R/h) and the 10 R/h line (inside contour). Large maps are divided into a number of vertical strips and the strips are numbered in increasing sequence for ease of identification and assembly into a complete map. This sequencing is accomplished automatically no matter how large the map is. The maximum strip width is fixed by the geometry of the printer, but the program automatically ascertains that the total number of grid points across all strips is that which the user specified. In the vertical direction on the paper (north-south) all required data points are simply printed in their correct positions and, therefore, no further identification is required. It should be noted, for the sake of correctly interpreting the output map, that the coordinates of the lowest, leftmost map data point are not the minimum coordinate pair put in by the user; they are the minimum coordinate pair incremented by one x and y grid interval. Thus, this lower left point is the first data point falling one full grid interval within the area of interest to the user.

****

THE DEPARTMENT OF DEFENSE FALLOUT PREDICTION SYSTEM

****

OUTPUT PROCESSOR MODULE

PREPARED BY
TECHNICAL OPERATIONS RESEARCH, INC.
BURLINGTON, MASS.

LISTING OF GROUNDED PARTICLES

TRANSPORT IDENTIFICATION

FIFTH LARGE SCALE TEST OF THE DELFIC MODEL. 1 FEB. 1967. TRANSPOST

BLOCK 1

NO. OF PARTICLES IN THIS BLOCK IS 150

X	Y	T	PS	MASS
999813.7031	999866.8594	109.7602	661.0439	0.0090
999972.2656	999950.7734	153.9715	661.0439	0.0090
999970.7891	999951.6797	150.3999	661.0439	0.0090
1000027.4297	999938.4609	238.7078	661.0439	0.0090
999662.4688	999698.2500	217.6443	661.0439	0.0090
999663.4297	999698.6719	218.0461	661.0439	0.0090
999877.9453	999762.4375	270.3820	661.0439	0.0090
999956.3516	999877.6875	258.7040	661.0439	0.0090
999836.9375	999713.0938	304.3261	661.0439	0.0090
999806.2500	999705.2266	290.9941	661.0439	0.0090
1000158.4531	999878.6328	330.9649	661.0439	0.0090
1000141.9453	999877.0000	320.4454	661.0439	0.0090
1000103.4141	999840.0781	355.6223	661.0439	0.0090
1000114.9844	999879.2813	335.1282	661.0439	0.0090
1000040.3828	999762.6016	365.5172	661.0439	0.0090
1000086.0625	999809.9453	400.1892	661.0439	0.0090
1000064.4609	999804.8984	387.9202	661.0439	0.0090
1000341.3359	999952.9609	417.7250	661.0439	0.0090
1000336.1484	999951.8359	414.3079	661.0439	0.0090
1000511.2344	1000045.2578	441.2204	661.0439	0.0090
1000513.3906	1000045.8125	442.6173	661.0439	0.0090
1000350.3750	999944.4766	467.4481	661.0439	0.0090
1000370.6328	999960.4609	460.4454	661.0439	0.0090
1000618.8516	1000088.9922	481.9517	661.0439	0.0090
1000833.7891	1000206.9531	504.9391	661.0439	0.0090
1000823.4531	1000202.7734	501.5282	661.0439	0.0090

1000922.6719	1000252.3125	521.0816	661.0439	0.0090
1001043.8828	1000316.1406	541.8622	661.0439	0.0090
1001034.0156	1000311.8750	538.6753	661.0439	0.0090
1001116.6328	1000350.0391	558.5450	661.0439	0.0090
1001293.7109	1000514.4766	559.4243	661.0439	0.0022
1001293.7109	1000177.1875	559.4243	661.0439	0.0022
1000956.4141	1000177.1875	559.4243	661.0439	0.0022
1000956.4141	1000514.4766	559.4243	661.0439	0.0022
999779.9453	999855.3594	108.1759	540.6692	0.0090
999662.8516	999700.3594	215.4246	540.6692	0.0090
999940.2422	999855.7188	300.7138	540.6692	0.0090
999942.0234	999860.6953	292.7125	540.6692	0.0090
999942.3906	999861.7266	291.0587	540.6692	0.0090
999835.2656	999764.7969	303.9042	540.6692	0.0090
1000310.9297	999921.4219	396.4778	540.6692	0.0090
1000287.4766	999921.4141	379.9917	540.6692	0.0090
1000281.7109	999921.9766	375.6066	540.6692	0.0090
999970.1563	999686.3359	436.9803	540.6692	0.0090
1000015.8828	999719.2344	428.3916	540.6692	0.0090
1000466.8594	999978.7656	481.6200	540.6692	0.0090
1000286.0391	999888.2109	455.6174	540.6692	0.0090
1000518.9219	1000003.6953	499.9505	540.6692	0.0090
1000493.5938	999994.2266	490.0412	540.6692	0.0090
1000362.9453	999905.4375	526.5606	540.6692	0.0090
1000376.5938	999914.9297	522.9203	540.6692	0.0090
1000880.8281	1000192.4063	555.3261	540.6692	0.0090
1000883.1719	1000190.8828	554.7974	540.6692	0.0090
1000631.6953	1000043.5469	548.0274	540.6692	0.0090
1001035.7188	1000251.0547	580.5498	540.6692	0.0090
1001186.9922	1000330.3047	615.6166	540.6692	0.0090
1001174.6406	1000325.7813	611.5813	540.6692	0.0090
1001587.5938	1000627.9844	643.7514	540.6692	0.0090
1001583.6016	1000625.4375	643.1794	540.6692	0.0090
1001816.2266	1000778.6563	675.0872	540.6692	0.0090
1001998.7031	1000954.3125	673.0941	540.6692	0.0022
1001998.7031	1000617.0156	676.0941	540.6692	0.0022
1001661.4063	1000617.0156	676.0941	540.6692	0.0022
1001661.4063	1000954.3125	676.0941	540.6692	0.0022
1002215.5547	1001094.7109	707.4751	540.6692	0.0022
1002215.5547	1000757.4141	707.4751	540.6692	0.0022
1001878.2656	1000757.4141	707.4751	540.6692	0.0022
1001878.2656	1001094.7109	707.4751	540.6692	0.0022
1002200.6953	1001074.4219	702.1252	540.6692	0.0022
1002200.6953	1000737.1250	702.1252	540.6692	0.0022
1001863.3984	1000737.1250	702.1252	540.6692	0.0022
1001863.3984	1001074.4219	702.1252	540.6692	0.0022
1002505.4766	1001082.7578	733.0195	540.6692	0.0022
1002505.4766	1000745.4609	733.0195	540.6692	0.0022
1002036.2031	1000847.0000	731.0921	540.6692	0.0022
1002036.2031	1001184.2969	731.0921	540.6692	0.0022
1002408.0781	1001090.6641	722.2159	540.6692	0.0022
1002408.0781	1000753.3672	722.2159	540.6692	0.0022
1001982.2656	1000816.6563	720.8784	540.6692	0.0022
1001982.2656	1001153.9531	720.8784	540.6692	0.0022
1002876.6484	1001161.4609	749.9310	540.6692	0.0022
1002876.6484	1000824.1641	749.9310	540.6692	0.0022
1002440.8984	1000950.7969	751.4804	540.6692	0.0022
1002440.8984	1001288.0938	751.4804	540.6692	0.0022
999890.5156	999902.7109	196.0146	455.9091	0.0090

999681.0859	999708.1719	230.6680	455.9091	0.0090
999935.2891	999831.8516	286.7701	455.9091	0.0090
999932.1406	999842.4141	335.8081	455.9091	0.0090
999719.0313	999599.5781	383.2466	455.9091	0.0090
1000218.9531	999755.1172	510.1834	455.9091	0.0090
1000217.0000	999761.1094	503.5328	455.9091	0.0090
1000216.7422	999761.9063	502.6511	455.9091	0.0090
1000218.5078	999756.4844	508.6675	455.9091	0.0090
1000436.6328	999919.3047	565.0691	455.9091	0.0090
1000513.9531	999961.4063	544.4145	455.9091	0.0090
1000672.2578	1000006.0469	606.9872	455.9091	0.0090
1000541.6172	999931.5469	597.7697	455.9091	0.0090
999998.9063	1000001.7734	3.5909	12473.7008	0.0090
999998.6875	1000001.9922	3.944	12473.7008	0.0090
999998.6953	1000001.9844	3.9341	12473.7008	0.0090
999998.6484	1000002.0469	4.1363	12473.7008	0.0090
999998.3594	1000002.3516	4.7463	12473.7008	0.0090
999998.1641	1000002.5703	5.2631	12473.7008	0.0090
999990.0156	1000024.9922	53.2560	661.0439	0.0090
1000379.0938	1000004.4219	395.6474	850.1669	0.0090
1000510.0625	1000086.4375	379.1820	850.1669	0.0090
1000373.4609	1000010.7031	363.5162	850.1669	0.0090
1000488.1719	1000076.0469	369.2923	850.1669	0.0090
1000351.4375	1000003.2734	352.2446	850.1669	0.0090
1000355.7344	1000004.7266	354.4451	850.1669	0.0090
1000119.0391	999873.4531	335.7248	850.1669	0.0090
1000097.4609	999865.6875	318.4868	850.1669	0.0090
1000080.7734	999856.7344	323.2555	850.1669	0.0090
1000085.4844	999863.3672	304.1440	850.1669	0.0090
1000102.7578	999890.5781	286.5992	850.1669	0.0090
1000101.1016	999877.9297	295.9191	850.1669	0.0090
999932.3828	999785.7656	275.2522	850.1669	0.0090
999875.5547	999765.7109	256.5722	850.1669	0.0090
999896.9844	999789.9844	239.9431	850.1669	0.0090
999867.7578	999763.5469	253.3261	850.1669	0.0090
999916.6250	999805.0859	233.3254	850.1669	0.0090
999904.5000	999791.4219	243.5866	850.1669	0.0090
999979.8047	999875.2422	220.1690	850.1669	0.0090
1000025.3984	999947.6094	199.6659	850.1669	0.0090
999994.2656	999924.6172	208.2278	850.1669	0.0090
1000044.4453	999967.6719	184.0057	850.1669	0.0090
1000025.2109	999948.9531	196.4965	850.1669	0.0090
999792.9219	999790.8984	166.1074	850.1669	0.0090
999772.4453	999774.8750	179.2275	850.1669	0.0090
999925.6094	999920.3984	140.4025	850.1669	0.0090
999899.8359	999885.5625	158.2701	850.1669	0.0090
1000013.5703	999995.6094	110.8231	850.1669	0.0090
999973.7578	999956.3516	126.5207	850.1669	0.0090
1000006.9766	999980.9219	117.1562	850.1669	0.0090
999994.1484	1000020.0234	50.5690	850.1669	0.0090
999981.1250	1000025.0703	26.4409	850.1669	0.0090
1000102.8203	999930.7500	229.3430	1219.1012	0.0090
999953.0234	999835.1875	219.4342	1219.1012	0.0090
999974.7344	999852.7344	209.8566	1219.1012	0.0090
999948.1875	999843.1016	201.0213	1219.1012	0.0090
999967.6172	999850.2969	207.1759	1219.1012	0.0090
999964.4453	999854.3984	196.6471	1219.1012	0.0090
999942.1328	999848.2031	186.7100	1219.1012	0.0090
999995.4375	999904.6328	177.6155	1219.1012	0.0090

BLOCK 2

NO. OF PARTICLES IN THIS BLOCK IS 144

X	Y	T	PS	MASS
1000544.4844	999931.8594	603.1177	455.9091	0.0090
1001193.3281	1000307.7031	653.7841	455.9091	0.0090
1001217.7422	1000318.8281	660.8842	455.9091	0.0090
1001454.0938	1000445.9844	709.7954	455.9091	0.0090
1001388.8594	1000401.9141	699.7327	455.9091	0.0090
1001401.7031	1000408.2031	700.7300	455.9091	0.0090
1002030.1797	1000862.6484	742.8521	455.9091	0.0090
1002055.3828	1000875.4219	746.3553	455.9091	0.0090
1002563.2969	1000975.6406	788.0953	455.9091	0.0090
1002850.9609	1001049.3047	792.0753	455.9091	0.0022
1002850.9609	1000712.0078	792.0753	455.9091	0.0022
1002308.2031	1000932.3047	793.1015	455.9091	0.0022
1002308.2031	1001269.6016	793.1015	455.9091	0.0022
1003109.2031	1001158.5859	831.9199	455.9091	0.0022
1003109.2031	1000821.2891	831.9199	455.9091	0.0022
1002732.5234	1000713.1250	833.4435	455.9091	0.0022
1002732.5234	1001250.4219	833.4435	455.9091	0.0022
1003090.6719	1001138.2344	826.9933	455.9091	0.0022
1003090.6719	1000800.9375	826.9933	455.9091	0.0022
1002707.1719	1000910.0469	830.0415	455.9091	0.0022
1002707.1719	1001247.3438	830.0415	455.9091	0.0022
1003648.9375	1001413.1484	866.0882	455.9091	0.0022
1003648.9375	1001075.8516	866.0882	455.9091	0.0022
1003311.6406	1001075.8516	866.0882	455.9091	0.0022
1003311.6406	1001413.1484	866.0882	455.9091	0.0022
1003535.8281	1001338.2266	853.9816	455.9091	0.0022
1003535.8281	1001000.9297	853.9816	455.9091	0.0022
1003198.5391	1001000.9297	853.9816	455.9091	0.0022
1003198.5391	1001338.2266	853.9816	455.9091	0.0022
1003899.5156	1001505.2969	894.5464	455.9091	0.0022
1003899.5156	1001168.0000	894.5464	455.9091	0.0022
1003562.2266	1001168.0000	894.5464	455.9091	0.0022
1003562.2266	1001505.2969	894.5464	455.9091	0.0022
1003923.1875	1001508.5313	896.4286	455.9091	0.0022
1003923.1875	1001171.2344	896.4286	455.9091	0.0022
1003585.8984	1001171.2344	896.4286	455.9091	0.0022
1003585.8984	1001508.5313	896.4286	455.9091	0.0022
1003926.3672	1001489.6797	933.6617	455.9091	0.0022
1003926.3672	1001152.3906	933.6617	455.9091	0.0022
1003589.0781	1001152.3906	933.6617	455.9091	0.0022
1003589.0781	1001489.6797	933.6617	455.9091	0.0022
1003876.7266	1001457.6953	927.9183	455.9091	0.0022
1003876.7266	1001120.4063	927.9183	455.9091	0.0022
1003539.4297	1001120.4063	927.9183	455.9091	0.0022
1003539.4297	1001457.6953	927.9183	455.9091	0.0022
1003767.3906	1001385.8672	965.8685	455.9091	0.0022
1003767.3906	1001048.5781	965.8685	455.9091	0.0022

```
**********
THE DEPARTMENT OF DEFENSE FALLOUT PREDICTION SYSTEM
**********

OUTPUT PROCESSOR MODULE

PREPARED BY
TECHNICAL OPERATIONS RESEARCH,INC.
BURLINGTON, MASS.


**** SUMMARY OF INPUT IDENTIFIERS AND INITIAL CONDITIONS ****

**** OUTPUT PROCESSOR IDENTIFICATION ****
 FIFTH LARGE SCALE TEST OF DELFIC. CHECK TOMPKINS.  OPP

**** INITIAL CONDITIONS (FIREBALL) IDENTIFICATION ****
 FIFTH LARGE SCALE TEST OF THE DELFIC MODEL. 1 FEB. 1967.  INIT. COND.

**** CLOUD RISE IDENTIFICATION ****
 FIFTH LARGE SCALE TEST OF THE DELFIC MODEL. 1 FEB. 1967.  CLOUD RISE

**** PARTICLE SET EXPANSION IDENTIFICATION ****
 FIFTH LARGE SCALE TEST OF THE DELFIC MODEL. 1 FEB. 1967.  PSE

**** TRANSPORT IDENTIFICATION ****
 FIFTH LARGE SCALE TEST OF THE DELFIC MODEL. 1 FEB. 1967.  TRANSPOST

**** WIND IDENTIFICATION ****
 THIS WIND FIELD USES THE FRENCHMAN FLATS AND ROAD 8 STATIONS.  1/30/67

**** TOPOGRAPHY IDENTIFICATION ****


**** OTHER INPUTS ****

**** THE CONTROL VARIABLE ARRAY, IC(J), WAS GIVEN THE FOLLOWING VALUES ****
   1   2   3   4   5   6   7   8   9  10  11  12  13  14  15   1   0   0

THE FOLLOWING LOGICAL TAPES ARE AVAILABLE FOR SORTING.
   1   3   4  -0  -0  -0  -0  -0  -0  -0  -0  -0  -0  -0  -0  -0  -0  -0
```

PRINTER DESCRIPTION - CHARACTERS PER INCH
HORIZONTAL 10 VERTICAL 6

THE DIFFUSION CONSTANT IS 2.00000

```
                    ****  OUTPUT PROCESSOR TASK    1  ****

GRID LIMITS AND INTERVALS
   XMIN          XMAX          YMIN          YMAX          DELTA X          DELTA Y
   993000.       1050000.      998000.       1015000.        1500.0          1500.0

THE CONTROL VARIABLE ARRAY, JC(J), HAS BEEN GIVEN THE FOLLOWING VALUES.
   1   2   3   4   5   6   7   8   9  10  11  12  13  14   0   0  17   0

GROUND ROUGHNESS FACTOR      0.500


REQUEST NUMBER    1

TYPE    2          T1 =        1.0          T2 =        2.0          MASCHN =   -0

MAPPED ON GRID INTERVALS  DGX =     1500.0   DGY=    1250.0

THE OUTPUT PRESENTATION IS A
TWO-LINE E FORMAT MAP

THE QUANTITY PRESENTED IS
DOSE RATE NORMALIZED TO TIME H+1 HOUR.
GROUND ZERO IS LOCATED AT  X =  1030000.0  , Y =  1000000.0
```

Y-COORDINATE SCALES FOR SIDES OF MAP

1014250.	1014250.
1013000.	1013000.
1011750.	1011750.
1010500.	1010500.
1009250.	1009250.
1008000.	1008000.
1006750.	1006750.
1005500.	1005500.
1004250.	1004250.
1003000.	1003000.
1001750.	1001750.
1000500.	1000500.
999250.	999250.

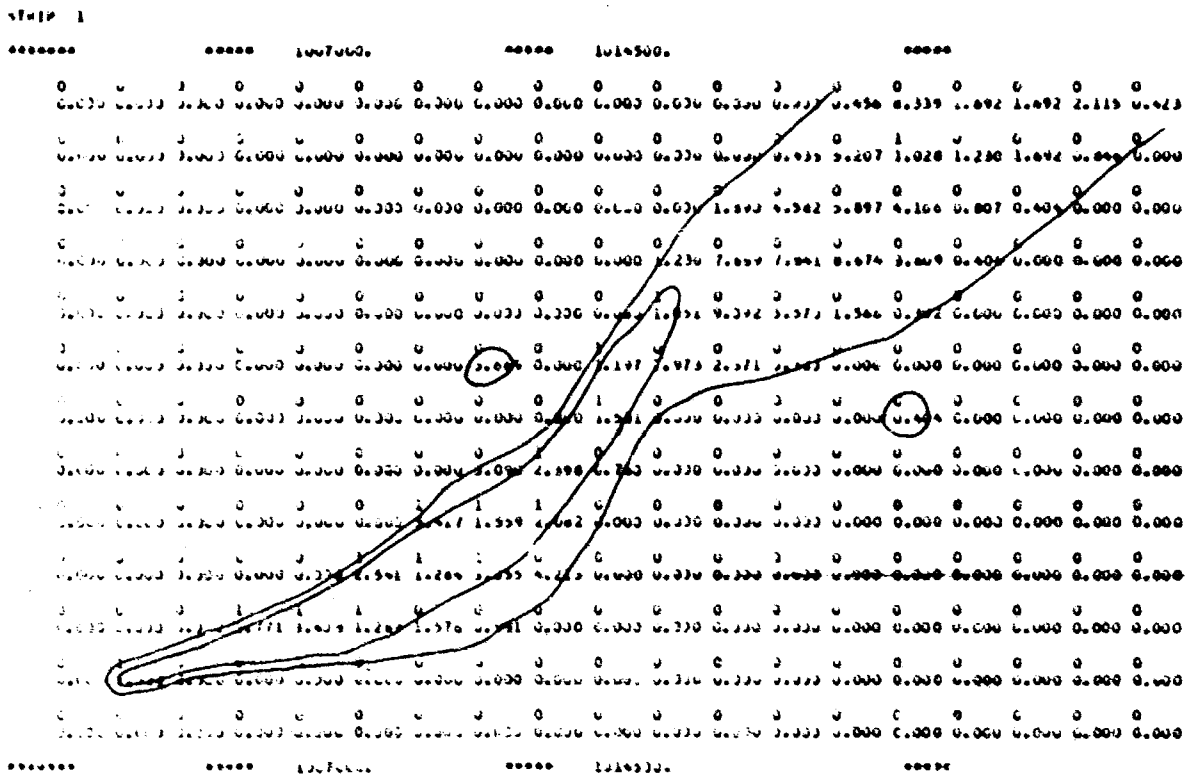

STEP 8

0.000	0.000	0.000	0.000	0.000	0.000	0.000	0.000	0.000	0.000	0.000	0.000	0.000	0.000	0.000
0.000	0.000	0.000	0.000	0.000	0.000	0.000	0.000	0.000	0.000	0.000	0.000	0.000	0.000	0.000
0.000	0.000	0.000	0.000	0.000	0.000	0.000	0.000	0.000	0.000	0.000	0.000	0.000	0.000	0.000
0.000	0.000	0.000	0.000	0.000	0.000	0.000	0.000	0.000	0.000	0.000	0.000	0.000	0.000	0.000
0.000	0.000	0.000	0.000	0.000	0.000	0.000	0.000	0.000	0.000	0.000	0.000	0.000	0.000	0.000
0.000	0.000	0.000	0.000	0.000	0.000	0.000	0.000	0.000	0.000	0.000	0.000	0.000	0.000	0.000
0.000	0.000	0.000	0.000	0.000	0.000	0.000	0.000	0.000	0.000	0.000	0.000	0.000	0.000	0.000
0.000	0.000	0.000	0.000	0.000	0.000	0.000	0.000	0.000	0.000	0.000	0.000	0.000	0.000	0.000
0.000	0.000	0.000	0.000	0.000	0.000	0.000	0.000	0.000	0.000	0.000	0.000	0.000	0.000	0.000

APPENDIX

PRIMARY ARRAYS OF THE OUTPUT PROCESSOR

OMAP( )	One-dimensional map array used to store the part of the map currently being prepared for printing. Explicit index conversion is used to store and retrieve two-dimensional map data from this one-dimensional storage array.
X(J)	X coordinate of the Jth central particle description that is currently in memory. The arrays X, Y, T, PS, FMAS, and KTR are spoken of as the particle arrays.
Y(J)	Y coordinate, see X(J).
T(J)	Impact time associated with the Jth central particle description.
PS(J)	Particle diameter (microns) associated with the Jth central particle description.
FMAS(J)	Mass per unit area (mks system) associated with the Jth cloud subdivision at the time of its definition.
KTR(J)	Class indicator number for the Jth central particle description. KTR(J) = 0 indicates that the Jth particle description is not in use. KTR(J) > 0 indicates the number of the map zone or buffer zone into which the Jth central particle has fallen. See NP(K).
PSIZE(I)	Central particle size (microns, diameter) of the Ith size range of the tabulated particle size vs property arrays. The other arrays in this set are PACT, FMASS, and SV.
PACT(I)	Minimum particle size of the Ith particle size range. See PSIZE(I).
FMASS(I)	Fraction of the total particulate mass of the cloud that is represented by the Ith particle size range.
SV(I)	Surface to volume ratio of the Ith particle size range (as required by the Freiling radial distribution model).

NP(K)	Count of the number of central particles that are in the particle arrays and are known to belong in the Kth numbered zone or buffer zone of the desired map. These zones and buffer zones are numbered sequentially from left to right starting with the buffer zone just to the right of the first map zone to be printed (Zone 1 of Figure 1). Thus NP(K) for odd K are counts for buffer zones and for even K they are counts for interbuffer map zones.
CRID( )	Cloud Rise run identifier.
OPID( )	Output Processor run identifier.
PSEID( )	Cloud Rise-Transport Interface run identifier.
TOPID( )	Topography data identifier.
WID( )	Wind data identifier.
DETID( )	Initial Conditions run identifier.
TID( )	Transport run identifier.
IC( )	Control integer array.
IOT( )	An array containing the logical numbers of those tape units that are available for use by the Output Processor in sorting grounded particle descriptions.
ITT( )	Permanent copy of the original state of the array IOT( ).
JMAP( )	Array internal to subroutine MAP used to store temporarily a one-line group of integers for use in the printing of two-line E or F format maps.

Unclassified
Security Classification

DOCUMENT CONTROL DATA - R&D

(Security classification of title, body of abstract and indexing annotation must be entered when the overall report is classified)

1. ORIGINATING ACTIVITY *(Corporate author)*
Technical Operations, Inc.
Burlington, Mass.

2a. REPORT SECURITY CLASSIFICATION
Unclassified

2b. GROUP

3. REPORT TITLE
Department of Defense Land Fallout Prediction System
Volume VI - Output Processor

4. DESCRIPTIVE NOTES *(Type of report and inclusive dates)*
Final Report

5. AUTHOR(S) *(Last name, first name, initial)*
T.W. Schwenke and P. Flusser

6. REPORT DATE
20 February 1967

7a. TOTAL NO. OF PAGES
118

7b. NO. OF REFS
0

8a. CONTRACT OR GRANT NO.
DA 18-035-AMC-737(A)

b. PROJECT AND TASK NO.
DASA Subtask A7a/10.058

c. DOD ELEMENT

d. DOD SUBELEMENT

9a. ORIGINATOR'S REPORT NUMBER(S)
TO-B 66-48

9b. OTHER REPORT NO(S) *(Any other numbers that may be assigned this report)*
DASA-1800-VI

10. AVAILABILITY/LIMITATION NOTICES
Each transmittal of this document outside the agencies of the U.S. Government must have prior approval of the Director, Defense Atomic Support Agency, Washington, D.C. 20301

11. SUPPLEMENTARY NOTES

12. SPONSORING MILITARY ACTIVITY
Defense Atomic Support Agency

13. ABSTRACT

The Output Processor Module of the Department of Defense Land Fallout Prediction System is described and instructions are given for its use. Working in close liaison with the Particle Activity Module (Volume V), the Output Processor converts the output of the Transport Module into a variety of displays in a directly contourable numerical (map) form by means of the off-line printer. It requires only two sets of input data in addition to the inputs called for by the Particle Activity Module: (1) a magnetic tape containing descriptions of sets of grounded fallout particles — an input from the Transport Module, and (2) card inputs by which the user may request any number of processing tasks to be carried out on the grounded fallout particle data. In each request any of sixteen distinct types of processing may be specified leading to the display of maps of any of the following quantities: (1) exposure rate "normalized" to H + 1 hour; (2) exposure rate at time H + T1 hours; (3) integrated exposure, H + T1 to infinity, accounting for time of arrival; (4) integrated exposure, H + T1 to H + T2, accounting for time of arrival; (5) fallout mass (per unit area); (6) fallout mass (per unit area) deposited between times H + T1 and H + T2; (7) integrated exposure, H + T1 to H + T2, assuming all particles have arrived by H + T1 hours; (8) same as 7 but integrated to infinity; (9) concentration of an individual mass chain

DD FORM 1 JAN 64 1473

Unclassified
Security Classification

Unclassified
Security Classification

14. KEY WORDS	LINK A ROLE	LINK A WT	LINK B ROLE	LINK B WT	LINK C ROLE	LINK C WT
Output Processor						
Fallout						
Nuclear Weapons Effects						
DELFIC						

INSTRUCTIONS

1. ORIGINATING ACTIVITY: Enter the name and address of the contractor, subcontractor, grantee, Department of Defense activity or other organization *(corporate author)* issuing the report.

2a. REPORT SECURITY CLASSIFICATION: Enter the overall security classification of the report. Indicate whether "Restricted Data" is included. Marking is to be in accordance with appropriate security regulations.

2b. GROUP: Automatic downgrading is specified in DoD Directive 5200.10 and Armed Forces Industrial Manual. Enter the group number. Also, when applicable, show that optional markings have been used for Group 3 and Group 4 as authorized.

3. REPORT TITLE: Enter the complete report title in all capital letters. Titles in all cases should be unclassified. If a meaningful title cannot be selected without classification, show title classification in all capitals in parenthesis immediately following the title.

4. DESCRIPTIVE NOTES: If appropriate, enter the type of report, e.g., interim, progress, summary, annual, or final. Give the inclusive dates when a specific reporting period is covered.

5. AUTHOR(S): Enter the name(s) of author(s) as shown on or in the report. Enter last name, first name, middle initial. If military, show rank and branch of service. The name of the principal author is an absolute minimum requirement.

6. REPORT DATE: Enter the date of the report as day, month, year, or month, year. If more than one date appears on the report, use date of publication.

7a. TOTAL NUMBER OF PAGES: The total page count should follow normal pagination procedures, i.e., enter the number of pages containing information.

7b. NUMBER OF REFERENCES: Enter the total number of references cited in the report.

8a. CONTRACT OR GRANT NUMBER: If appropriate, enter the applicable number of the contract or grant under which the report was written.

8b, 8c, & 8d. PROJECT NUMBER: Enter the appropriate military department identification, such as project number, subproject number, system numbers, task number, etc.

9a. ORIGINATOR'S REPORT NUMBER(S): Enter the official report number by which the document will be identified and controlled by the originating activity. This number must be unique to this report.

9b. OTHER REPORT NUMBER(S): If the report has been assigned any other report numbers *(either by the originator or by the sponsor)*, also enter this number(s).

10. AVAILABILITY/LIMITATION NOTICES: Enter any limitations on further dissemination of the report, other than those imposed by security classification, using standard statements such as:

(1) "Qualified requesters may obtain copies of this report from DDC."

(2) "Foreign announcement and dissemination of this report by DDC is not authorized."

(3) "U. S. Government agencies may obtain copies of this report directly from DDC. Other qualified DDC users shall request through _____."

(4) "U. S. military agencies may obtain copies of this report directly from DDC. Other qualified users shall request through _____."

(5) "All distribution of this report is controlled. Qualified DDC users shall request through _____."

If the report has been furnished to the Office of Technical Services, Department of Commerce, for sale to the public, indicate this fact and enter the price, if known.

11. SUPPLEMENTARY NOTES: Use for additional explanatory notes.

12. SPONSORING MILITARY ACTIVITY: Enter the name of the departmental project office or laboratory sponsoring *(paying for)* the research and development. Include address.

13. ABSTRACT: Enter an abstract giving a brief and factual summary of the document indicative of the report, even though it may also appear elsewhere in the body of the technical report. If additional space is required, a continuation sheet shall be attached.

It is highly desirable that the abstract of classified reports be unclassified. Each paragraph of the abstract shall end with an indication of the military security classification of the information in the paragraph, represented as *(TS), (S), (C), or (U)*.

There is no limitation on the length of the abstract. However, the suggested length is from 150 to 225 words.

14. KEY WORDS: Key words are technically meaningful terms or short phrases that characterize a report and may be used as index entries for cataloging the report. Key words must be selected so that no security classification is required. Identifiers, such as equipment model designation, trade name, military project code name, geographic location, may be used as key words but will be followed by an indication of technical context. The assignment of links, rules, and weights is optional.

Unclassified
Security Classification

DD Form 1473
Abstract (cont'd.)

(curies/m^2); (10) time of arrival; (11) time of cessation; (12) smallest particle deposited; (13) largest particle deposited; (14) mass deposited by particles in the size range S1 to S2; (15) H + 1 hour "normalized" exposure rate resulting from particles in the size range S1 to S2; and (16) the number of cloud (model) subdivisions affecting each map grid point. The user is free to specify any limiting coordinates and scale factors for the map display that will be produced and can also cause the resulting map, or maps, to be recorded on magnetic tape for further processing.