AEDC-TR-71-109

COMPUTER-AIDED DESIGN AND DOCUMENTATION OF INSTRUMENTATION SYSTEMS

J. L. Dorris

ARO, Inc.

July 1971

Approved for public release; distribution unlimited.

ENGINE TEST FACILITY

ARNOLD ENGINEERING DEVELOPMENT CENTER

AIR FORCE SYSTEMS COMMAND

ARNOLD AIR FORCE STATION, TENNESSEE

NOTICES

When U. S. Government drawings specifications, or other data are used for any purpose other than a definitely related Government procurement operation, the Government thereby incurs no responsibility nor any obligation whatsoever, and the fact that the Government may have formulated, furnished, or in any way supplied the said drawings, specifications, or other data, is not to be regarded by implication or otherwise, or in any manner licensing the holder or any other person or corporation, or conveying any rights or permission to manufacture, use, or sell any patented invention that may in any way be related thereto.

Qualified users may obtain copies of this report from the Defense Documentation Center.

References to named commercial products in this report are not to be considered in any sense as an endorsement of the product by the United States Air Force or the Government.

COMPUTER-AIDED DESIGN AND DOCUMENTATION OF INSTRUMENTATION SYSTEMS

J. L. Dorris
ARO, Inc.

Approved for public release; distribution unlimited.

FOREWORD

The research reported herein was sponsored by Headquarters, Arnold Engineering Development Center (AEDC), Air Force Systems Command (AFSC).

The results of the research which are presented in this report were obtained by ARO, Inc., (a subsidiary of Sverdrup & Parcel and Associates, Inc.), contract operator of AEDC, AFSC, Arnold Air Force Station, Tennessee, under Contract F40600-72-C-0003. The ARO Project Number was RT8002, and the manuscript was submitted for publication on April 27, 1971.

This technical report has been reviewed and is approved.

Walter C. Knapp
Lt Colonel, USAF
AF Representative, ETF
Directorate of Test

Joseph R. Henry
Colonel, USAF
Director of Test

ABSTRACT

A system of digital computer programs developed to aid in the design and documentation of instrumentation systems is described. Included are brief descriptions of system concepts and capabilities, required system inputs, explanations of system outputs and information contained therein, and system utilization. This system is currently in use by the ETF J-Instrument Branch of the Arnold Engineering Development Center.

CONTENTS

		Page
	ABSTRACT	iii
I.	INTRODUCTION	1
II.	APPROACH	2
III.	INFORMATION UTILIZED BY COMPUTER PROGRAM	6
IV.	COMPUTER OUTPUTS	8
V.	ADDITIONAL COMPUTER PROGRAM CAPABILITIES	10
VI.	PLANNED ADDITIONAL PROGRAM CAPABILITIES	10

APPENDIXES

I. ILLUSTRATIONS

Figure		
1.	Typical Hookup	13
2.	Standard Cable Fabrication	14
3.	Portion of Typical Hookup Reference File	15
4.	Portion of Equipment Reference File	16
5.	Portion of Transducer Reference File	17
6.	Input and Data Reduction Cards	18
7.	Hookup Information	19

II. COMPUTER SYSTEM PROGRAM 20

SECTION I
INTRODUCTION

Testing of rocket and jet engines under simulated altitude conditions at Arnold Engineering Development Center usually requires the acquisition of several hundred channels of data per test. A major portion of these data consists of pressures and temperatures which are used to determine engine performance and test cell environment. The nature of such tests dictates that like measurements be made at several different locations on the engine and in the test cell. The specific measurements which are made are dependent on the type of information desired for the test program.

Test programs may require from one week to as high as two years of test time, and turnaround time between test programs must be held to a minimum. Therefore, it is not feasible to permanently install complete instrumentation systems. However, since all test programs require large quantities of certain types of measurements, it is feasible to permanently install, and document by engineering drawings, basic instrumentation system components and then utilize these components as required by the test programs. All permanently installed components are connected to interconnection devices which allow for complete versatility of equipment usage and almost limitless configurations of the equipment to meet different test program instrumentation requirements.

The permanently installed instrumentation equipment associated with a test cell is grouped into three major portions: (1) wiring, or hard-wired signal conditioners, used to route signals from permanent instrumentation connection points in the test cell or area to an interconnection device, (2) signal conditioning devices having both inputs and outputs wired to the interconnection device, and (3) recording or readout devices having inputs wired to the interconnection device.

Complete measurement systems are built up by connecting transducers to the permanently installed components using specially fabricated cabling and then interconnecting (patching) the permanent components to establish the desired signal conditioning and recording and/or readout configuration.

Engineering releases (called an Instrument Book) document the measurement systems necessary for a test program and are used to accomplish the installation, wiring, interconnecting, and setting up of the required instrumentation systems. The Instrument Book contains

information such as measurement nomenclature, transducer assignments, cabling to be fabricated for connection of the transducer to a permanent instrumentation connection point, the specific permanent instrumentation components required, the exact required interconnection of components, setup of signal conditioners and recording and/or readout devices, data reduction constants and methods, transducer calibration data, and sketches or drawings which show the physical location of each transducer or pickup. A new Instrument Book is prepared and released for each test program and is revised when the applicable test program requirements change.

The task of compiling an Instrument Book consists largely of preparing listings of the specific hardware used for each measurement, specifying the interconnections which must be made to connect the different components of the measurement channel, and maintaining a running inventory of the equipment that has been used and that which remains available. This task necessarily entails a large amount of manual bookkeeping and the transferring of information from one form to another. To eliminate as many of these manual manipulations as possible, a system of computer programs was developed to aid in the design and documentation of instrumentation systems. The concept of operation, information utilized, information obtained, and additional (and planned additional) capabilities of this computer program system are described in this report.

SECTION II
APPROACH

To use computers in the design and documentation of instrumentation systems, sufficient information must be supplied concerning the desired configuration and the available equipment. To accomplish this, "model" instrumentation systems and reference files were established. These systems and files are discussed in the following paragraphs.

2.1 MODEL INSTRUMENTATION SYSTEMS

The first step taken was to establish model instrumentation systems, called Typical Hookups (Fig. 1, Appendix I). Each Typical Hookup consists of a specific type of transducer, signal conditioning equipment, readouts and/or recording devices, and the necessary interconnecting wiring. It should be noted that a Typical Hookup requires only certain

types of equipment rather than specific pieces of hardware. The equipment specified on a Typical Hookup, with the exception of the transducer and fabricated cable, consists of permanently installed instrumentation equipment and wiring.

The connection of the transducer to the permanent equipment is accomplished by the use of nonpermanent (fabricated) cabling. This cabling is fabricated for each measurement and each new test program in accordance with released drawings called Standard Cable Fabrications (Fig. 2). Each Standard Cable Fabrication provides the detailed information to permit fabrication of cabling which will interconnect certain types of transducers with a specific type of connection point which is a part of the permanent instrumentation system. Because of standardization of connection points, the same Standard Cable Fabrication may be used with many different Typical Hookups. Each Typical Hookup specifies a Standard Cable Fabrication to be used.

By translating the Typical Hookups into a form compatible with computer methods, these Typical Hookups were used to guide the computer in the design of actual measurement systems.

Drawings of each Typical Hookup and Standard Cable Fabrication were released for use during setup, checkout, and trouble shooting of measurement systems.

2.2 REFERENCE FILES FOR COMPUTER

Since Typical Hookups were to be utilized as guides for selection of measurement system hardware, reference files of Typical Hookups and files of all instrumentation hardware available for use were established. The instrumentation hardware was grouped into two categories: (1) transducers and (2) permanently installed equipment and/or wiring.

To establish the transducer file, all transducers were assigned a type code. The type code was representative of the type (Bridge, LVDT, etc.) of transducer and the connector and connector pin functions required for mating with the transducer. All electrically interchangeable transducers thus have identical type codes.

For the Equipment File, all permanently installed instrumentation hardware was categorized as to its specific function, and each individual unit or channel was assigned a type code so that all functionally interchangeable equipment has identical type codes. Additionally, each unit

or channel of equipment was assigned a unique identification code that corresponds to the actual number by which the equipment is identified and which is shown on the permanent equipment installation drawings.

By using these codes, reference files of measurement systems (Typical Hookups), the permanent equipment available for use (equipment inventory), and the available transducers were established for use by the computer. These files are discussed in the following paragraphs.

2.2.1 Reference File of Model Instrumentation Systems

The reference file of Typical Hookups contains the information required to guide the computer in the selection of transducers, signal conditioning equipment, readouts and/or recording devices, and equipment interconnections. This information consists of: (1) Typical Hookup identification number, (2) type code of required transducer, (3) identification number of the Standard Cable Fabrication to be utilized, (4) type code of cable or hardwired signal conditioner used to route signal from permanent test cell or area connection point to interconnection device, (5) type code or codes of desired interconnectable signal conditioners, (6) type code of readout or recording devices, (7) optional English description of signal routing, and (8) system points where interconnections are required.

The reference file of Typical Hookups is applicable to any test complex and need be prepared only once. Revision of the file is required only as Typical Hookups are added, deleted, or changed. Figure 3 is an example of a portion of the reference file of Typical Hookups. The information on each line is contained on a single 80-character punched card.

2.2.2 Reference File of Instrumentation Equipment

To supply information concerning equipment available for use, a reference file of all permanently installed instrumentation wiring and equipment was established. The information in this file consists of: (1) card number for identification and sorting of file punched cards, (2) identification code of the equipment, (3) English description of the equipment, (4) applicable equipment type code, (5) interconnection device and point to which the equipment input is connected, (6) interconnection device and point to which the equipment output is connected, and (7) a designation letter which identifies the test complex with which the equipment is associated. In addition, space is provided for the computer to enter the designation of the measurement systems to which the equipment is assigned.

The instrumentation equipment reference file is applicable to a given individual test complex and need be prepared only once for each complex. Revision of the file is required when equipment availability, installation, or assignment changes occur. Figure 4 is an example of a portion of the equipment reference file. The information is contained on a single 80-character punched card.

2.2.3 Reference File of Transducers

A reference file of transducers was established to provide information as to the available transducers, the range and function of each transducer, and the transducer calibration data. The information contained in this file for each transducer consists of: (1) type code assigned to the transducer, (2) transducer range in engineering units, (3) range units, (4) transducer manufacturer's name, (5) identification or serial number assigned to the transducer, (6) type of calibration/signal conditioning circuit used with transducer during calibration, (7) engineering units value of each of five standard calibration steps (if applicable), (8) units associated with calibration values, (9) the date on which the transducer will next be due for its next periodic calibration, and (10) code letter (if applicable) to identify individual bridges or outputs of a multiple-output transducer. It should be noted that each individual output of a multiple-output transducer is entered in the file as a separate transducer. The information for each transducer is contained in a total of five punched cards with each card corresponding to one of five standard calibration steps.

The reference file of transducers is applicable to all test complexes utilizing the transducer "pool" and is prepared only once. Revision of this file is required as transducer assignment changes are made or when transducers are recalibrated. Figure 5 is an example of a portion of the transducer reference file.

2.3 SYSTEM REQUIREMENTS

The quantity, types, and other pertinent information necessary to permit computer design of instrument systems were communicated to the computer by the use of punched cards referred to as input cards. These cards are used to provide the following information: (1) type of system (by Typical Hookup number) and range required for each measurement system, (2) the parameter designation, (3) measurement system nomenclature and transducer location sketch identification number, and (4) any preselected equipment. These cards must be prepared for each Instrument Book to be processed by the computer.

In addition, punched cards referred to as data reduction cards are used to provide such information as the methods for data reduction (type of calibrations, etc.) and to indicate the data reference. These cards must also be prepared (if data reduction information is desired) for each Instrument Book to be processed by the computer. Figure 6 is an example of both input and data reduction cards.

2.4 COMPUTER PROGRAM

The computer program system was prepared so that the previously discussed reference file of Typical Hookups would guide the computer in building up measurement systems. To build up a measurement system, the computer program selects required hardware from the transducer and equipment reference files in accordance with the input card and selected Typical Hookup requirements. The program allows for the preselection of all or any portion of the hardware to be used for a particular measurement parameter. If specific hardware is not preselected and specified by identification number on the input card, the computer program will select the transducer and hardware in accordance with the type codes specified on the Typical Hookup. When hardware is selected for use with a parameter, the computer program assigns it to that parameter so that it cannot be selected for use with any other parameter. Also, the interconnections which are required to connect the selected hardware in proper configuration are selected and tabulated by item number.

The result of a computer run with the program system is a series of listings which describes the instrumentation systems that are to be used for a test program. These listings are discussed in Section IV.

Details of the computer programs are not discussed in this report. However, listings of actual programs and program flow charts are contained in Appendix II for analysis if desired.

SECTION III
INFORMATION UTILIZED BY COMPUTER PROGRAM

3.1 REFERENCE FILES

As discussed in Section II, the computer program utilizes the Typical Hookup, equipment, and transducer reference files. These files are prepared and maintained on punched cards, permitting easy

revision of the files. Prior to use, the files are transferred to magnetic tapes which are used to input the file information to the computer program.

3.2 NECESSARY INPUT INFORMATION

In addition to the reference files, the computer program must have additional information before it can design and document a measurement system. This information is supplied by the previously described input cards and consists of (1) parameter designation assigned to the measurement system, (2) the number of the Typical Hookup to be utilized as a guide for design of the system, (3) the range or the identification number of the transducer to be used for the measurement, (4) Instrument Book item number assigned to the measurement, and (5) the card count number which identifies input cards associated with the measurement and which specifies the processing sequence of that group of cards. It should be noted that, generally, the number of input cards required for a measurement corresponds to the number of independent readouts and/or recording devices desired for that measurement.

3.3 OPTIONAL INPUT INFORMATION

Information not required by the computer program, but in some cases desirable, may also be supplied on the input cards for each measurement system. This information consists of: (1) parameter nomenclature which is descriptive of the measurement, (2) identification number of specific signal routing if such is desired, (3) identification number of specific signal conditioning hardware if preselected, (4) identification number of specific readout and/or recording hardware if preselected, (5) the sketch number which shows the physical location and installation of the transducer in the test cell or area, and (7) a priority code if it is desirable to process the input cards for this measurement prior to those for lower priority measurements. Inclusion of all or any portion of the above information on the input cards is optional.

3.4 DATA REDUCTION INFORMATION

Data reduction cards contain the parameter designation, the identification code for the particular step of the calibration sequence which applies to the assigned readout and/or recorder, and the data reference code. The above codes instruct the computer as to which calibration steps are to be used to reduce the data for a parameter and to the

particular reference point for the calibration. The specified calibration information (obtained from the transducer file or from tables of standard millivolt substitution calibration values built into the computer program) will be printed on the data reduction information listing. This listing is discussed in Section IV.

SECTION IV
COMPUTER OUTPUTS

As previously stated, the result of a computer run is a series of listings which describes the instrumentation systems that are to be used. Most of these listings are incorporated in the Instrument Book, and the remaining ones are maintained as equipment inventory and utilization lists. These listings are discussed in the following paragraphs.

4.1 HOOKUP INFORMATION

The hookup information listing is incorporated in the Instrument Book so that instrumentation components can be properly connected to form complete measurement systems. For each measurement, hookup information consists of (1) parameter designation and nomenclature, (2) identification numbers of transducer and all equipment utilized with the measurement and the order in which it is connected, (3) identification number of the Standard Cable Fabrication to be used to connect the transducer to the specified permanent connection point, (4) identification number of the Typical Hookup by which the system was designed, (5) assigned number of the Instrument Book sketch which shows the physical location of the transducer, and (6) the Instrument Book item number assigned to the parameter. Figure 7 is a sample page of a hookup information listing.

4.2 INTERCONNECTION INFORMATION

To connect the permanently installed equipment specified in the hookup listing, specific points on the interconnection devices must be connected. The interconnection information listing specifies the exact interconnections required and the item number of the measurement system with which they are associated. This listing is included in the Instrument Book for use during hookup, checkout, and trouble shooting of the measurement systems.

4.3 CABLE FABRICATION AND INSTALLATION INFORMATION

To facilitate the fabrication and installation of cables used to connect transducers to permanent connection points, a listing of required cable fabrications is produced and included in the Instrument Book. This listing specifies identification number of the Standard Cable Fabrication to be used for each measurement system, the points to which each end of the cable is to be connected, and the first signal conditioner used with the parameter.

4.4 DIGITAL SYSTEM CHANNEL ASSIGNMENTS

To facilitate the setup and checkout of multiple-channel digital recording systems, a channel number ordered listing of the parameters associated with the system is included in the Instrument Book. The designation of the parameter to which a channel is assigned is printed beside the channel number, thus allowing rapid determination of the channels used and all channel assignments.

4.5 DATA REDUCTION INFORMATION

Data reduction information listings are included in the Instrument Book. This information consists of listings for each recorder and the parameter assigned to the recorder or recorder channel. In addition, the calibration step number code and engineering units equivalent value of the calibration step along with the data reference for each parameter are included.

4.6 UPDATED REFERENCE FILES

Listings of the reference files which were used by the computer program are maintained as equipment inventory and utilization lists. The listing of the Typical Hookup file is used for reference as to the information supplied to the computer for the given computer run.

When a transducer or other equipment is selected for use with a measurement during a computer run, the appropriate reference file is updated to show that the selected hardware is assigned to the measuring system. Upon completion of the run, listings of the updated transducer and equipment files are produced. These listings show all the transducer and equipment reference information used and the hardware utilized for each measurement. Listings of the updated files provide an excellent transducer and equipment inventory.

SECTION V
ADDITIONAL COMPUTER PROGRAM CAPABILITIES

In addition to its normal use for design and documentation of electrical instrumentation systems, the computer program is frequently used to design and document pneumatic systems. Special reference files of pneumatic system components and Typical Hookups are supplied to the computer as reference files. The computer processes input cards for pneumatic systems and outputs pneumatic hookup, interconnection, and assignment information in the same manner as for electrical systems.

Another feature of the computer program provides that, on completion of a computer run of an Instrument Book, all information that the computer contains at that time is transferred to a special reel of magnetic tape. By utilizing this tape reel and the special revision capabilities of the program, the Instrument Book can be revised by the computer. In such cases, all information and assignments which are not altered by the specific use of the revision capability will remain exactly as they were at the completion of the previous run.

SECTION VI
PLANNED ADDITIONAL PROGRAM CAPABILITIES

The further development of the program system to allow the computer to specify the setup of multiple or adjustable range equipment utilized with measurement systems is planned in the near future. This capability will include such things as specifying gain settings for variable gain devices and specifying range for selectable range readouts and/or recorders.

In short, although a rather substantial start has been made toward automating much of the routine aspect of Instrumentation Systems Design, continued efforts to expand and improve the system are envisioned.

APPENDIXES

I. ILLUSTRATIONS

II. COMPUTER SYSTEM PROGRAM

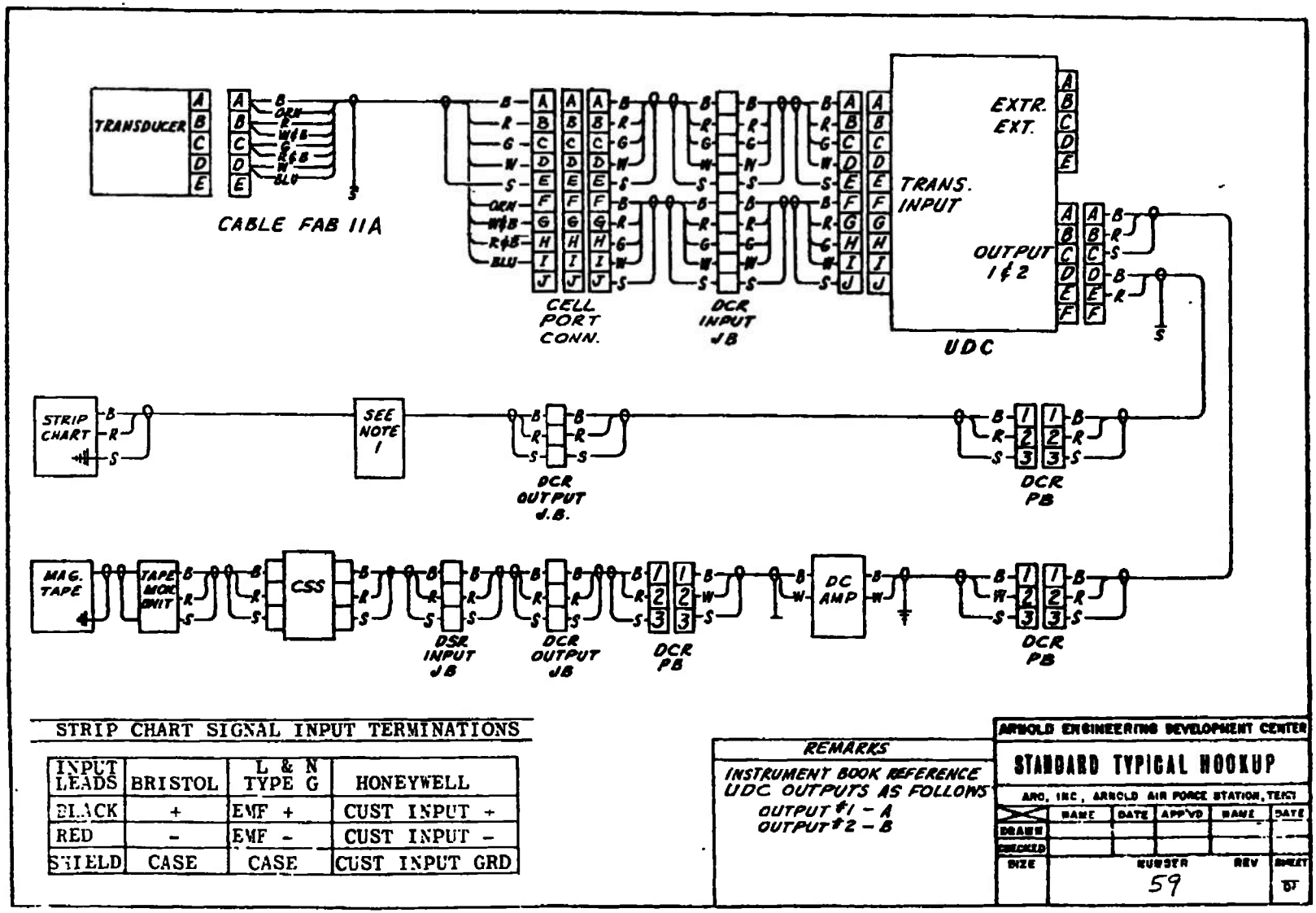

STRIP CHART SIGNAL INPUT TERMINATIONS

INPUT LEADS	BRISTOL	L & N TYPE G	HONEYWELL
BLACK	+	EMF +	CUST INPUT +
RED	-	EMF -	CUST INPUT -
SHIELD	CASE	CASE	CUST INPUT GRD

Fig. 1 Typical Hookup

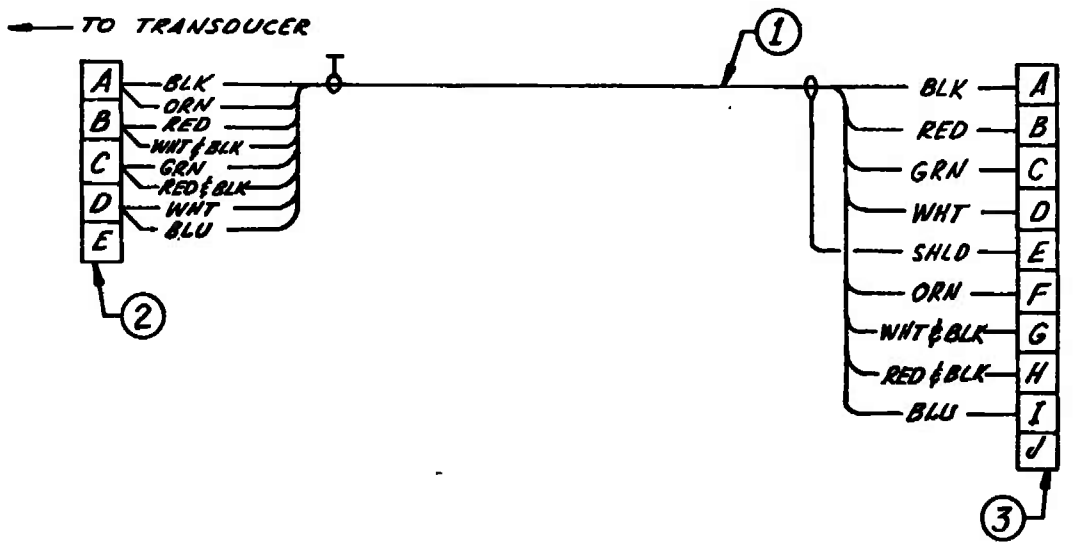

Quantity/ Cable	Material Description	Part No.	Stock No.	Item
1	CONNECTOR, CA06RX-18S-1P		5935-NL999507-5	3
1	CONNECTOR, CA06RX-14S-5S		5935-NL999507-2	2
AS REQ'D.	CABLE, 8 COND. W/SHLD. TEFLON		6145-NL559400-278	1

ARNOLD ENGINEERING DEVELOPMENT CENTER

STANDARD CABLE FAB

ARO, INC., ARNOLD AIR FORCE STATION, TENN

	NAME	DATE	APP'VD	NAME	DATE
DRAWN					
CHECKED					

SIZE | NUMBER 11 | REV A | SHEET 1 OF 1

Fig. 2 Standard Cable Fabrication

TYP NO.	C C	TRANSDUCER TYPE	I C	CABLE TYPE	SIGNAL ROUTING	WIRED S.C.	P.B. O	P.B. I	SIG. COND	P.B. O	P.B. I	P.B. O	P.B. I	SIG. COND	P.B. O	P.B. I	JB	REC. ELEC	CAB FAB
35	2	DUCER-5			AREA DCR I	UC4A	X									X	DCR O	SC	11A
35	1					UC4B	X									X	DCR O	MS	
36	2	DUCER-5		PORT		UC1A	X									X	DCR O	SC	11A
36	1					UC1B	X									X	DCR O	MS	
37	1	DUCER-5	X	PORT	THRUST CAL LOGIC SHOWN	UC1A	X									X		0003	83
38	1	DUCER-5	X	PORT	THRUST CAL LOGIC SHOWN	UC1A	X									X		DD03	B3
39C	1	DUCER-5			ARER OCR I	UC4A	X									X	DCR O	MS	50A
40A	1	DUCER-5		PORT	OCR I	UC1A	X									X	DCR O	0002	83
41C	2	DUCER-5		PORT	DCR I	UC1A	X									X		0002	83
41C	1					UC1B	X									X	DCR O	SR01	
42C	1	DUCER-5				UC1A	X									X	DCR O	0003	3
43C	3	DUCER-5		PORT		UC1A	X									X		0003	83
43C	2					UC1B	S2									X		SR01	
43C	1							X	MD01	X						X		ME04	
44C	4	DUCER-5		PORT		UC1A	X	X	FL01	X						X		0003	83
44C	3					UC1B	S2X		DA5A									LOG1	
44C	2								DA5B	X						X		ME09	
44C	1							X	OA5A	X						X		SR01	
45C	2	DUCER-5		PORT		UC1A	X									X		SR01	11A
45C	1					UC1B	X									X		0003	
47	2	DUCER-5				UC1A	X									X		DD02	83
47	1					UC1B	X	X	MD01	X						X		ME04	
48A	2	DUCER-5			OUTSIDE CELL CONN-DCR I	UC2A	X	X	MD01	X						X	DCR O	ME	54C
48A	1					UC2B	X									X	DCR O	0002	
49	2	DUCER-5		PORT		UC1A	X									X	DCR O	MS	11A
49	1					UC1B	X	X	MO	X						X	DCR O	ME	
50C	1	DUCER-5		PORT		UC1A	X	X	DA	X						X	DCR O	ME	11A
510	3	DUCER-5		PORT		UC1A	X									X	DCR O	MS	11A
51D	2					UC1B	S2X		DA	X						X	DCR O	ME	
510	1															X	DCR O	SC	
52C	1	DUCER-5	X	PORT		UC1A	X	X	MD01	X						X		ME04	11A
53A	2	DUCER-5			AREA-DCR I	UC4A	X									X		DD02	82
53A	1					UC4B	X	X	MDD1	X						X	DCR O	ME04	
54A	1	DUCER-5			AREA-DCR I	UC4A	X									X	DCR O	D002	82
55	2	DUCER-5				UC4A	X									X		OS	12A
55	1					UC4B	X									X		SC	
56A	2	DUCER-5				UC4A	X									X		MS	12A
56A	1					UC4B	X	X	VI	X						X		CO	
57C	3	DUCER-5		PORT		UC1A	S2X		VI	X						X		MT02	11A
57C	2							X	VI	X						X		MT02	
57C	1					UC1B	X	X	OA	X						X		OS23	
58A	3	DUCER-5		PORT		UC1A	X	X	VI	X						X	DCR O	MT02	11A
58A	2					UC1B	S2X		DA	X						X	DCR O	OS	
58A	1							X	DA	X						X	DCR O	SC	
59	2	DUCER-5		PORT		UC1A	X	X	DA	X						X	DCR O	MT01	11A
59	1					UC1B	X									X	DCR O	SC	
60C	2	DUCER-5		PORT	DCR I	UC1A	X	X	VI	S2						X	DCR O	MT02	11A
60C	1															X	DCR O	C001	
61	1	DUCER-5		PORT	DCR I	UC1A	X	X	MD01	X						X	DCR O	FA01	11A
62	2	DUCER-5		PORT		UC1A	X	X	VI	X						X	DCR O	MT02	11A

Fig. 3 Portion of Typical Hookup Reference File

B-FILE

CARD	C C	IDEN.	DESCRIPTION	TYPE CODE	FROM DEVICE	FROM DEVICE PT	TO DEVICE	TO DEVICE PT	USED FOR PARAMETER	TEST CELL
21	2	U021A	UDC OUTPUT A	UC5A	JB 23	21	PB1	R69	PTCV-1	M
21	1	U021B	UDC OUTPUT B	UC5B	JB 23	21	PB2	R91	PTCV-1	M
22	2	U022A	UDC OUTPUT A	UC5A	JB 23	22	PB1	R70		M
22	1	U022B	UDC OUTPUT B	UC5B	JB 23	22	PB2	R92		M
120	2	U430A	UDC OUTPUT A	UC1A	PORT 4	430	PB1	L78	PFV-1A	M
120	1	U430B	UDC OUTPUT B	UC1B	PORT 4	430	PB2	L34	PFV-1A	M
121	2	U431A	UDC OUTPUT A	UC1A	PORT 4	431	PB1	M69	POJH	M
121	1	U431B	UDC OUTPUT B	UC1B	PORT 4	431	PB2	M25	POJH	M
186	1	RJ316	T/C PORT - RJ3 CHAN 16	RJ02	JB 1229	116	PB1	B56	TOV-A	M
187	1	RJ317	T/C PORT - RJ3 CHAN 17	RJ02	JB 1229	117	PB1	B57		M
1082	1	A0908	DC AMPLIFIER	DA01	PB1	J32	PB1	J86		M
1083	1	A0909	DC AMPLIFIER	DA01	PB1	J33	PB1	J87	PFV-1A	M
1084	1	A0910	DC AMPLIFIER	DA01	PB1	J34	PB1	J88	POJH	M
1433	1	MTD01	MAG TAPE D CHAN 1 - FM	MT01	PB2	M72	CABLE3175	MT-D-01		M
1434	1	MTD02	MAG TAPE D CHAN 2 - FM	MT01	PB2	M73	CABLE3176	MT-D-02	PFV-1A	M
1730	1	MC030	MICROSADIC AMP 30 - 5MV	MS01	PB2	B83	CABLE3557	MC-030	TOV-A	M
1731	1	MC031	MICROSADIC AMP 31 - 5MV	MS01	PB2	B84	CABLE3558	MC-031		M
2231	1	M0102	METER 102	ME01	PB1	GB0	CABLE3264	MTR-102	POJH	M
2364	1	SC117	STRIP CHART 117	SC01	PB2	F56	CABLE3342	SC-117	PFV-1A	M
2365	1	SC118	STRIP CHART 118	SC01	PB2	F57	CABLE3343	SC-118		M
2366	1	SC119	STRIP CHART 119	SC01	PB2	F58	CABLE3344	SC-119	PTCV-1	M
3000	1		PB INTERCONNECT PB1-PB2	INTR	PB1	J15	PB2	E69	PFV-1A	M
3001	1		PB INTERCONNECT PB1-PB2	INTR	PB1	J16	PB2	E70	TOV-A	M
3002	1		PB INTERCONNECT PB1-PB2	INTR	PB1	J17	PB2	E71	PTCV-1	M
3003	1		PB INTERCONNECT PB1-PB2	INTR	PB1	J18	PB2	E72		M
3004	1		PB INTERCONNECT PB1-PB2	INTR	PB1	J19	PB2	E73		M
3005	1		PB INTERCONNECT PB1-PB2	INTR	PB1	J20	PB2	E74		M
3006	1		PB INTERCONNECT PB1-PB2	INTR	PB1	J21	PB2	S70		M
3007	1		PB INTERCONNECT PB1-PB2	INTR	PB1	J22	PB2	S71		M
3008	1		PB INTERCONNECT PB1-PB2	INTR	PB1	J23	PB2	S72		M

Fig. 4 Portion of Equipment Reference File

C-FILE

T-DUCER TYPE	RANGE	UNITS	B C	USED FOR PARAMETER	TRAN MFG.	I-NO	B C	UDC CARD	R N	POS. RN EQUIV.	NEG. RN EQUIV.	UNITS	RE-CAL DATE
DUCER-5	150Q	PSA		PDJH	TABER	26928			0			PSA	
						26928			1			PSA	
						26928			2			PSA	
						26928			3			PSA	
						26928			4			PSA	
DUCER-5	500	PSA		PFV-1A	TABER	27133		DS	0	N/A		PSA	011170
						27133			1	0120.102		PSA	
						27133			2	0239.530		PSA	
						27133			3	0358.474		PSA	
						27133			4	0477.182		PSA	
DUCER-5	5000	PSG		PTCV-1	TABER	28349		DS	0	N/A		PSG	032370
						28349			1	1354.884		PSG	
						28349			2	2712.516		PSG	
						28349			3	4069.841		PSG	
						28349			4	N/A		PSG	

Fig. 6 Portion of Transducer Reference File.

INPUT CARD

PARAMETER	COUNT	NOMENCLATURE	TYP NO	TRANSDUCER MFG (OPTIONAL)	R OR I	RANGE OR I NO	RANGE IN TS	CODE	HARD-WIRED SIG COND (OPTIONAL)	SIG COND	SIG COND	READ-OUT	LOC SK	ITEM NO	WHICH TYPE
PFV-1A	2	FUEL TCV PRESSURE	59		I	27133			U430A	A0909		MTD02	18	1	
PFV-1A	1								U430B						
PØJH	1	ØX INJECTØR PRESS.	50C	TABER	R	1500	PSA						13	2	
TØV-A	1	TCV ØX TEMPERATURE	324C						RJ02			MS01	21	3	
PTCV-1	1	TCV NIT. PRESSURE	6C		R	5000	PSG						9	4	

DATA REDUCTION CARD (SEPARATE DECK OF CARDS DO NOT MIX WITH INPUT CARDS)

PARAMETER									DATA REF
PFV-1A	1R		2R						CP
TØV-A				1M					CA
PTCV-1	2R								BA

Notes:

1. For parameter PFV-1A, all equipment has been preselected and specified by identification number on the input cards.
2. For parameter POJH, only the required information plus the name of a particular transducer manufacturer is included on the input card.
3. For parameter TOV-A, the required information and the type codes of the desired hardwired signal conditioner and readout are specified on the input card.
4. For parameter PTCV-1, only the required information is on the input card.

Fig. 6 Input and Data Reduction Cards

HOOKUP INFORMATION

PARAMETER	C C	NOMENCLATURE	TRAN I-NO.	CONNECTING DEVICE	CONNECTING POINT	WIRED S.C.	UDC CARD	SIG. COND.	SIG. COND.	READOUT	TYP NO.	CAB FAB	LOC SK.	ITEM NO	C C
PFV-1A	2	FUEL TCV PRESS.	27133	PORT 4	430	U430A	DS	A0909		MT002	59	11A	18	1	2
PFV-1A	1			PORT 4	430	U430B				SC117				1	1
POJH	1	OX INJECTOR PRESS.	26928	PORT 4	431	U431A		A0910		M0102	50C	11A	13	2	1
TOV-A	1	TCV OX. TEMP.	TC/CA	JB 1229	116	RJ316				MC030	324C	29A	21	3	1
PTCV-1	1	TCV NIT. PRESS.	28349	JB 23	21	U021A	DS			SC119	6C	12A	9	4	1

Fig. 7 Hookup Information

APPENDIX II
COMPUTER SYSTEM PROGRAM

For those desiring detailed information about the program system, the computer system program flow charts and program listings are presented. Figure II-1 is the program flow chart for the programs which produce the various Instrument Book listings, and Fig. II-2 is the program flow chart for the programs which revise a previous computer run. The remainder of this Appendix consists of listings of the actual programs. These programs are written in "COBOL F" language and are used with an IBM-360-Model 50 computer.

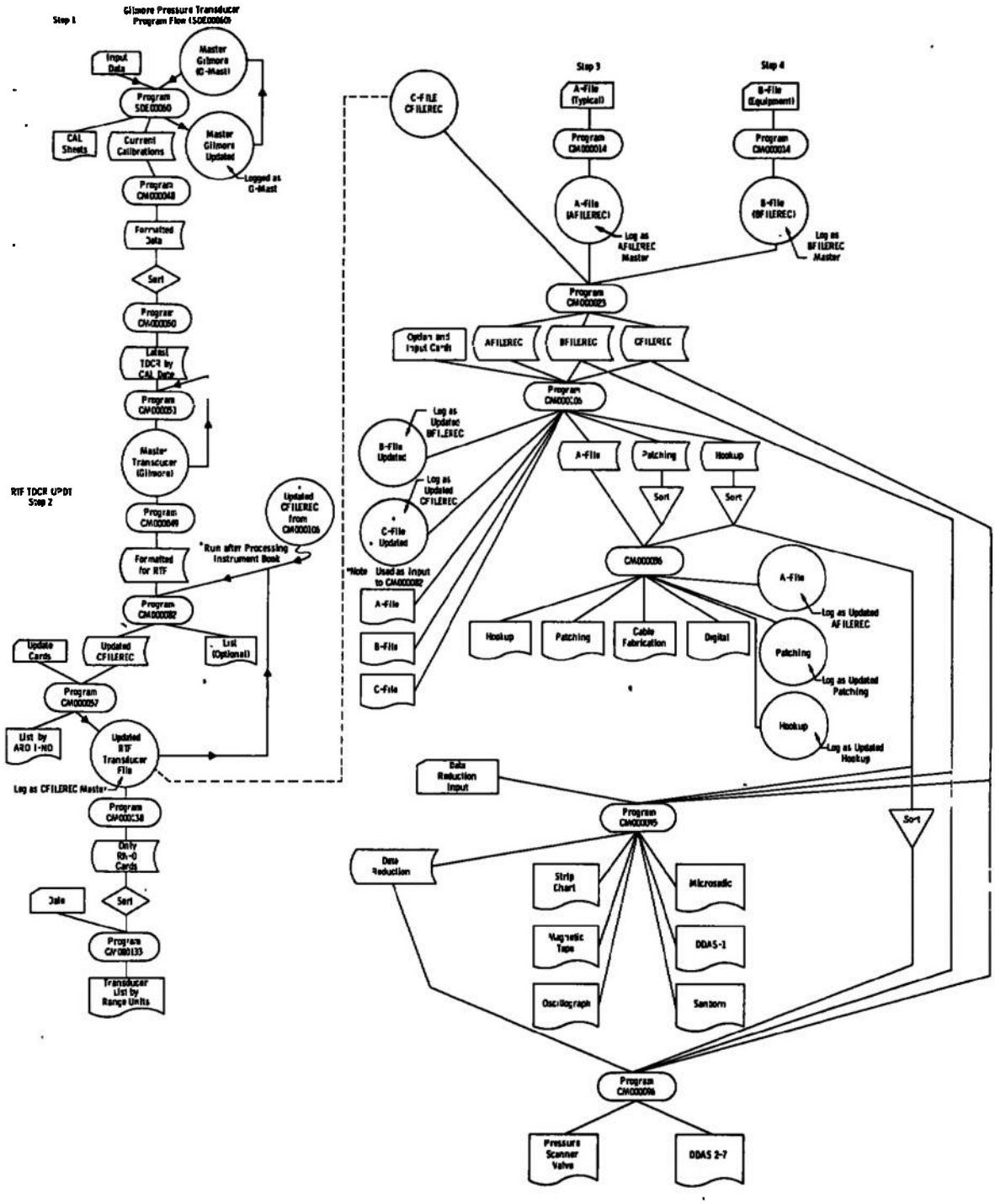

Fig. II-1 ETF Instrument Book

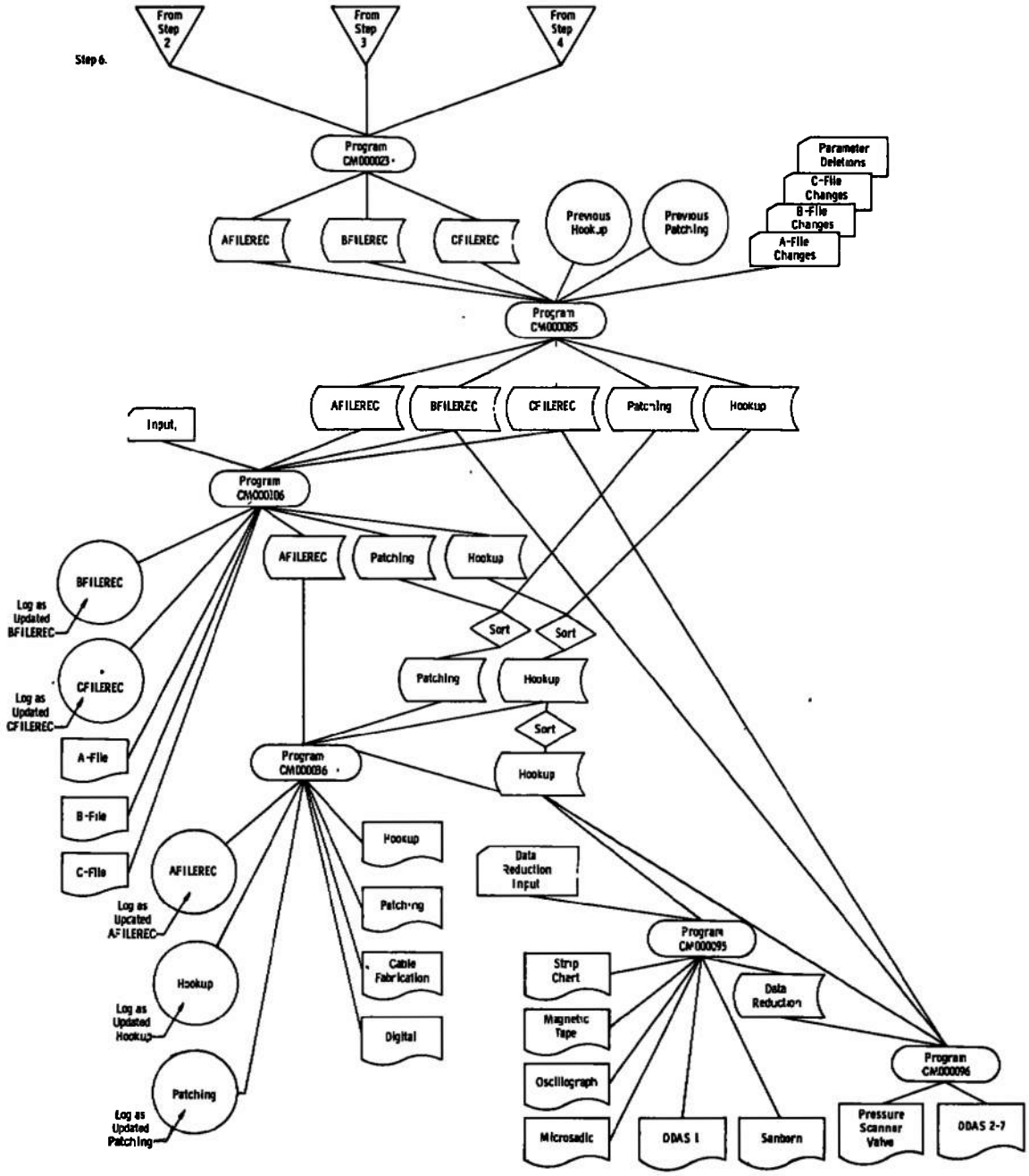

Fig. II-2 ETF Instrument Book Revision Option

1

```
00001    00101  IDENTIFICATION DIVISION.                                    CM000014
00002    00102  PROGRAM-ID. 'CM000014'.                                     CM000014
00003    00104  ENVIRONMENT DIVISION.                                       CM000014
00004    00105  CONFIGURATION SECTION.                                      CM000014
00005    00106  SOURCE-COMPUTER.     IBM-360 H50.                           CM000014
00006    00107  OBJECT-COMPUTER.     IBM-360 H50.                           CM000014
00007    00108  INPUT-OUTPUT SECTION.                                       CM000014
00008 **  109   FILE-CONTROL.
00009    00110                  SELECT CARD-IN ASSIGN 'ALLCARDS' UTILITY.   CM000014
00010    00112                  SELECT B-FILE ASSIGN 'BFILEREC' UTILITY.    CM000014
00011    00201  DATA DIVISION.                                              CM000014
00012    00202  FILE SECTION.                                               CM000014
00013    00203  FD  CARD-IN          RECORD CONTAINS 80 CHARACTERS          CM000014
00014    00204                       LABEL RECORDS ARE STANDARD             CM000014
00015    00205                       RECORDING MODE IS F                    CM000014
00016    00206                       BLOCK CONTAINS 10 RECORDS
00017    00207                       DATA RECORD IS REC-IN.                 CM000014
00018    00208  01  REC-IN.                                                 CM000014
00019 **  302       02  FILLER PICTURE X(4).
00020     303       02  FILLER PICTURE 9.
00021 **   304       02  FILLER  PICTURE X(75).
00022    00221  FD  B-FILE           RECORD CONTAINS 80 CHARACTERS          CM000014
00023    00222                       LABEL RECORDS ARE STANDARD             CM000014
00024    00223                       RECORDING MODE IS F                    CM000014
00025    00224                       BLOCK CONTAINS 1 RECORDS               CM000014
00026    00225                       DATA RECORD IS B-REC.                  CM000014
00027    00301  01  B-REC.                                                  CM000014
00028 **  209       02  FILLER  PICTURE X(4).
00029     2092      02  FILLER  PICTURE 9.
00030 **  2092      02  FILLER PICTURE X(75).
00031    00322  WORKING-STORAGE SECTION.                                   CM000014
00032    00323      77  A-CNT   PICTURE S999 COMPUTATIONAL-3 VALUE ZERO.   CM000014
00033    00403  PROCEDURE DIVISION.                                        CM000014
00034    00409  START.                                                      CM000014
00035 **  412       OPEN INPUT CARD-IN. OPEN OUTPUT B-FILE.
00036 **  411  CD-READ. READ CARD-IN AT END GO TO ENDIT.
00037     412       WRITE B-REC FROM REC-IN. GO TO CD-READ.
00038     413  ENDIT. CLOSE CARD-IN. CLOSE B-FILE.
00039     414       STOP RUN.
```

1

```
00001   001010 IOENTIFICATION DIVISION.                                    CM000095
00002   001020 PROGRAM-IO. 'CM000145'.
00003   001030 AUTHOR. ROSE.                                               CM000095
00004   001040 ENVIRONMENT DIVISION.                                       CM000095
00005   001050 CONFIGURATION SECTION.                                      CM000095
00006   001060 SOURCE-COMPUTER. IBM-360 H50.                               CM000095
00007   001070 OBJECT-COMPUTER. IBM-360 H50.                               CM000095
00008   001080 INPUT-OUTPUT SECTION.                                       CM000095
00009   001090 FILE-CONTROL.                                               CM000095
00010   001110     SELECT  HOOK  ASSIGN 'HOOK'  UTILITY.                   CM000095
00011   001140     SELECT  LIST  ASSIGN 'LIST'  UTILITY.                   CM000095
00012   001170 OATA OIVISION.                                              CM000095
00013   001180 FILE SECTION.                                               CM000095
00014   002150 FD  LIST    RECORDING F   BLOCK 12 RECORDS  RECORD 132
00015   002160             LABEL RECOROS OMITTED   OATA RECORO LIT.        CM000095
00016   002170 01  LIT     PICTURE  X(132).                                CM000095
00017   004010 FD  HOOK    RECORDING F  BLOCK 1 RECOROS  RECORO 133        CM000095
00018   004020             LABEL RECORDS STANOARO  DATA RECORD HOK.        CM000095
00019   004030 01  HOK.                                                    CM000095
00020   004040     02  FILLER  PICTURE  X.                                 CM000095
00021   004050     02  HPAR    PICTURE  X(9).                              CM000095
00022   004060     02  FILLER  PICTURE  X(58).                             CM000095
00023   004070     02  HUOC    PICTURE  X(5).                              CM000095
00024   004080     02  FILLER  PICTURE  X(25).                             CM000095
00025   004090     02  HROOUT  PICTURE  X(5).                              CM000095
00026   004100     02  RHRDOUT REOEFINES HRDOUT.                           CM000095
00027   004110         03  HR1     PICTURE  X.                              CM000095
00028   004120         03  HR2     PICTURE  X.                              CM000095
00029   004130         03  HR3     PICTURE  X.                              CM000095
00030   004131         03  HHR3 REOEFINES  HR3  PICTURE 9.
00031   004140         03  HR45    PICTURE  XX.                             CM000095
00032   004141         03  RHR45   REOEFINES HR45  PICTURE 99.             CM000095
00033   004150     02  RRHROOUT REOEFINES RHROOUT.                         CM000095
00034   004160         03  HR12    PICTURE  XX.                             CM000095
00035   004170         03  HR345   PICTURE  XXX.                            CM000095
00036   004180         03  R345 REOEFINES HR345  PICTURE 999.               CM000095
00037   004181     02  HROT REOEFINES HRDOUT.                              CM000095
00038   004182         03  HRDT1   PICTURE X.                               CM000095
00039   004183         03  HRO23   PICTURE 99.                              CM000095
00040   004184         03  HRD45   PICTURE XX.                              CM000095
00041   004210     02  FILLER  PICTURE  X(20).                             CM000095
00042   004220     02  HITEM   PICTURE  XXXX.                              CM000095
00043   004230     02  FILLER  PICTURE  X(6).                              CM000095
00044   023010 WORKING-STORAGE SECTION.                                    CM000095
00045   023020 77  J       PICTURE   999.                                  CM000095
00046   023030 77  K       PICTURE   999.                                  CM000095
00047   023100 77  JECT    PICTURE   99    VALUE 50.                       CM000095
00048 **011010 01  SVTABLE.                                                CM000095
00049   011020     02  SVTABL  OCCURS 60.                                  CM000095
00050   011050         03  SV3     PICTURE  X(9)   OCCURS  12.              CM000095
00051          01  SVTOP3
00052              02  FILLER  PICTURE X  VALUE SPACE.
00053              02  FILLER  PICTURE X(25) VALUE 'NO RANGE PORT 01   PORT 0'.
00054              02  FILLER  PICTURE X(25) VALUE '2  PORT 03   PORT 04   P'.
```

2

```
00055            02  FILLER  PICTURE X(25) VALUE 'ORT 05   PORT 06   PORT 0'.
00056            02  FILLER  PICTURE X(25) VALUE '7   PORT 08   PORT 09   P'.
00057            02  FILLER  PICTURE X(26) VALUE 'ORT 10   PORT 11   PORT 12'.
00058            02  FILLER  PICTURE X(5)  VALUE SPACE.
00059        01  SVTOP1.
00060            02  FILLER  PICTURE X(36) VALUE SPACE.
00061            02  FILLER  PICTURE X(25) VALUE 'SCANNER VALVE ASSIGNMENTS'.
00062            02  FILLER  PICTURE X(33) VALUE SPACE.
00063            02  FILLER  PICTURE X(11) VALUE 'SHEET   OF'.
00064            02  FILLER  PICTURE X(27) VALUE SPACE.
00065        01  SVTOP2.
00066            02  FILLER  PICTURE X  VALUE SPACE.
00067            02  FILLER  PICTURE X(12) VALUE 'SV DUCER    '.
00068            02  FILLER  PICTURE X(119)  VALUE SPACE.
00069        01  SVLINE.
00070            02  FILLER  PICTURE X  VALUE SPACE.
00071            02  SVNO    PICTURE  99.
00072            02  FILLER  PICTURE X(17) VALUE '        VAC REF    '.
00073            02  PORT2   PICTURE X(10).
00074            02  PORT3   PICTURE X(10).
00075            02  PORT4   PICTURE X(10).
00076            02  PORT5   PICTURE X(10).
00077            02  PORT6   PICTURE X(10).
00078            02  PORT7   PICTURE X(10).
00079            02  PORT8   PICTURE X(10).
00080            02  PORT9   PICTURE X(10).
00081            02  PORT10  PICTURE X(10).
00082            02  PORT11  PICTURE X(10).
00083            02  PORT12  PICTURE X(10).
00084            02  FILLER  PICTURE  XX  VALUE SPACE.
00085   030010 PROCEDURE DIVISION.                                          CM000095
00086   030021     OPEN OUTPUT LIST.
00087   030100     OPEN INPUT HOOK.                                         CM000095
00088   030130     PERFORM SPACE-T8.                                        CM000095
00089   031010 RD-HK.                                                       CM000095
00090   031020     READ HOOK AT END GO TO HK-END.                           CM000095
00091   031070     IF HR1 = 'S' AND HR2 = '0' OR '1' OR '2' OR '3' OR '4' OR CM000095
00092   031080     '5' OR '6' OR '7' OR '8' OR '9' GO TO SV-ROUTE.          CM000095
00093   031110     GO TO RD-HK.                                             CM000095
00094   049010 SV-ROUTE.                                                    CM000095
00095   049020     IF HRD23 > 60 DISPLAY '4902' HRDOUT  GO TO RD-HK.        CM000095
00096   049030     MOVE HRD23 TO J.                                         CM000095
00097   049040     IF RHR45 > 12 DISPLAY '4904' HRDOUT  GO TO RD-HK.        CM000095
00098              MOVE RHR45 TO K.
00099   049050     MOVE HPAR TO SV3 (J, K)                                  CM000095
00100   049060     GO TO RD-HK.                                             CM000095
00101   062010 HK-END.                                                      CM000095
00102   062020     CLOSE HOOK.                                              CM000095
00103   069070     GO TO WR-SR.                                             CM000095
00104   073010 SPACE-T8.                                                    CM000095
00105   073090     PERFORM SPC-SV VARYING K FROM 1 BY 1 UNTIL K > 12 AFTER  CM000095
00106   073100         J FROM 1 BY 1 UNTIL J > 60.                          CM000095
00107   074180 SPC-SV.                                                      CM000095
00108   074190     MOVE SPACE TO SV3 (J, K).                                CM000095
00109 **071010 WR-SR.                                                       CM000095
00110 **067240     MOVE 24 TO JECT.                                         CM000095
00111   068010 WR-SV.                                                       CM000095
```

3

```
00112                PERFORM WRSV1 VARYING J FROM 1 BY 1 UNTIL J > 60.
00113 **066240       GO TO WR-ALL.                                          CM000095
00114   068060 WRSV1.                                                       CM000095
00115                IF J = 1 PERFORM SVTOP.
00116                IF J = 21 PERFORM SVTOP.
00117                IF J = 41 PERFORM SVTOP.
00118                MOVE J TO SVNO.
00119                MOVE SV3 (J, 2) TO PORT2.
00120                MOVE SV3 (J, 3) TO PORT3.
00121                MOVE SV3 (J, 4) TO PORT4.
00122                MOVE SV3 (J, 5) TO PORT5.
00123                MOVE SV3 (J, 6) TO PORT6.
00124                MOVE SV3 (J, 7) TO PORT7.
00125                MOVE SV3 (J, 8) TO PORT8.
00126                MOVE SV3 (J, 9) TO PORT9.
00127                MOVE SV3 (J, 10) TO PORT10.
00128                MOVE SV3 (J, 11) TO PORT11.
00129                MOVE SV3 (J, 12) TO PORT12.
00130                WRITE LIT FROM SVLINE AFTER 2.
00131            SVTOP.
00132                WRITE LIT FROM SVTOP1 AFTER 0.
00133                WRITE LIT FROM SVTOP2 AFTER 3.
00134                WRITE LIT FROM SVTOP3 AFTER 1.
00135 **067230 WR-ALL.                                                       CM000095
00136   072040       CLOSE LIST.                                            CM000095
00137   072060       STOP RUN.                                              CM000095
```

1

```
00001   001010 IDENTIFICATION DIVISION.                                    CM000095
00002   001020 PROGRAM-ID. 'CM000095'.                                     CM000095
00003   001030 AUTHOR. ROSE.                                               CM000095
00004   001040 ENVIRONMENT DIVISION.                                       CM000095
00005   001050 CONFIGURATION SECTION.                                      CM000095
00006   001060 SOURCE-COMPUTER. IBM-360 H50.                               CM000095
00007   001070 OBJECT-COMPUTER. IBM-360 H50.                               CM000095
00008   001080 INPUT-OUTPUT SECTION.                                       CM000095
00009   001090 FILE-CONTROL.                                               CM000095
00010   001100     SELECT BFILE ASSIGN 'BFILE' UTILITY.                    CM000095
00011   001110     SELECT HOOK  ASSIGN 'HOOK'  UTILITY.                    CM000095
00012   001120     SELECT CFILE ASSIGN 'CFILE' UTILITY.                    CM000095
00013   001130     SELECT CARO  ASSIGN 'CARO'  UTILITY.                    CM000095
00014   001140     SELECT LIST  ASSIGN 'LIST'  UTILITY.                    CM000095
00015   001150     SELECT DCARD ASSIGN 'DCARD' UTILITY.                    CM000095
00016   001170 DATA DIVISION.                                              CM000095
00017   001180 FILE SECTION.                                               CM000095
00018   002010 FD  BFILE    RECORD CONTAINS 80 CHARACTERS                  CM000095
00019   002020              LABEL RECORDS ARE STANDARD                     CM000095
00020   002030              RECORDING MODE IS F                            CM000095
00021   002040              BLOCK CONTAINS 45 RECORDS                      CM000095
00022   002050              DATA RECORD IS BFIL.                           CM000095
00023   002060 01  BFIL.                                                   CM000095
00024   002070     02  B1       PICTURE  X(5).                              CM000095
00025   002080     02  B3.                                                 CM000095
00026   002090         03  B3A PICTURE  XX.                                CM000095
00027   002100         03  B3B PICTURE  XXX.                               CM000095
00028   002110     02  B4       PICTURE  X(24).                             CM000095
00029   002130     02  B5       PICTURE  X(4).                              CM000095
00030   002140     02  FILLER   PICTURE  X(42).                             CM000095
00031   002150 FD  LIST     RECORDING F   BLOCK 12 RECORDS  RECORD 132
00032   002160              LABEL RECORDS OMITTED   DATA RECORD LIT.       CM000095
00033   002170 01  LIT      PICTURE  X(132).                               CM000095
00034   003010 FD  CFILE    RECORD CONTAINS 80 CHARACTERS                  CM000095
00035   003020              LABEL RECORDS ARE STANDARD                     CM000095
00036   003030              RECORDING MODE IS F                            CM000095
00037   003040              BLOCK CONTAINS 45 RECORDS                      CM000095
00038   003050              DATA RECORD IS CFIL.                           CM000095
00039   003060 01  CFIL.                                                   CM000095
00040   003070     02  C1       PICTURE  X(4).                              CM000095
00041   003080     02  C2       PICTURE  9.                                 CM000095
00042   003090     02  C3       PICTURE  X(7).                              CM000095
00043   003100     02  C4       PICTURE  X(11).                             CM000095
00044   003110     02  C5       PICTURE  X(9).                              CM000095
00045   003120     02  C6       PICTURE  X(9).                              CM000095
00046   003130     02  C7       PICTURE  X(7).                              CM000095
00047   003140     02  C8       PICTURE  X(4).                              CM000095
00048   003150     02  C9       PICTURE  X.                                 CM000095
00049   003160     02  C10      PICTURE  X(9).                              CM000095
00050   003170     02  C11      PICTURE  X(9).
00051   003180     02  C11B     PICTURE  XXX.                               CM000095
00052   003190     02  C12      PICTURE  X(6).                              CM000095
00053   004010 FD  HOOK     RECORDING F  BLOCK 1 RECORDS  RECORD 133       CM000095
00054   004020              LABEL RECORDS STANDARD  DATA RECORD HOK.       CM000095
```

2

```
00055  004030 01  HOK.                                                    CM000095
00056  004040     02  FILLER  PICTURE  X.                                 CM000095
00057  004050     02  HPAR    PICTURE  X(9).                              CM000095
00058  004060     02  FILLER  PICTURE  X(58).                             CM000095
00059  004070     02  HUDC    PICTURE  X(5).                              CM000095
00060  004080     02  FILLER  PICTURE  X(25).                             CM000095
00061  004090     02  HROOUT  PICTURE  X(5).                              CM000095
00062  004100     02  RHROOUT REDEFINES HROOUT.                           CM000095
00063  004110         03  HR1     PICTURE  X.                             CM000095
00064  004120         03  HR2     PICTURE  X.                             CM000095
00065  004130         03  HR3     PICTURE  X.                             CM000095
00066  004131         03  HHR3 REOEFINES  HR3  PICTURE 9.
00067  004140         03  HR45    PICTURE  XX.                            CM000095
00068  004141         03  RHR45   REOEFINES HR45  PICTURE 99.            CM000095
00069  004150     02  RRHROOUT REDEFINES RHROOUT.                         CM000095
00070  004160         03  HR12    PICTURE  XX.                            CM000095
00071  004170         03  HR345   PICTURE  XXX.                           CM000095
00072  004180         03  R345 REOEFINES HR345  PICTURE 999.              CM000095
00073  004181     02  HROT REOEFINES HROOUT.                              CM000095
00074  004182         03  HROT1   PICTURE X.                              CM000095
00075  004183         03  HRD23   PICTURE 99.                             CM000095
00076  004184         03  HRO45   PICTURE XX.                             CM000095
00077  004210     02  FILLER  PICTURE  X(20).                             CM000095
00078  004220     02  HITEM   PICTURE  XXXX.                              CM000095
00079  004230     02  FILLER  PICTURE  X(6).                              CM000095
00080  005010 FD  CARD     RECOROING F   BLOCK 10 RECORDS   RECORD 80     CM00009
00081  005020              LABEL RECOROS OMITTEO   OATA RECORO CAR.       CM000095
00082  005030 01  CAR.                                                    CM000095
00083  005040     02  FILLER  PICTURE  X(80).                             CM000095
00084  005060 FD  OCARD    RECOROING F   BLOCK 1 RECOROS   RECORD 41      CM000095
00085  005070              LABEL RECOROS STANDARD  OATA RECORD OCAR.      CM000095
00086  005080 01  DCAR.                                                   CM000095
00087  005090     02  OR1     PICTURE  X(9).                              CM000095
00088  005100     02  FILLER  PICTURE  X.                                 CM000095
00089  005110     02  DR2     PICTURE  XX.                                CM000095
00090  005111     02  ROR   REOEFINES OR2.                                CM000095
00091  005112         03  ROR1    PICTURE  X.                             CM000095
00092  005113         03  RDR2    PICTURE  X.                             CM000095
00093  005120     02  FILLER  PICTURE  X.                                 CM000095
00094  005130     02  OR3     PICTURE  XX.                                CM000095
00095  005131     02  ROR3 REOEFINES OR3.                                 CM000095
00096  005132         03  DR3A    PICTURE X.                              CM000095
00097  005133         03  DR3B    PICTURE X.                              CM000095
00098  005140     02  FILLER  PICTURE  X.                                 CM000095
00099  005150     02  DR4     PICTURE  XX.                                CM000095
00100  005151     02  ROR4 REDEFINES OR4.                                 CM000095
00101  005152         03  OR4A    PICTURE X.                              CM000095
00102  005153         03  DR4B    PICTURE X.                              CM000095
00103  005160     02  FILLER  PICTURE  X.                                 CM000095
00104  005170     02  OR5     PICTURE  XX.                                CM000095
00105  005171     02  RDR5 REDEFINES DR5.                                 CM000095
00106  005172         03  DR5A    PICTURE X.                              CM000095
00107  005173         03  DR5B    PICTURE X.                              CM000095
00108  005180     02  FILLER  PICTURE  X.                                 CM000095
00109  005190     02  DR7     PICTURE  XXX.                               CM000095
00110  005191     02  RDR7  REDEFINES  DR7.                               CM000095
00111  005192         03  RDR7A   PICTURE X.                              CM000095
```

3

```
00112   005193          03  RDR7B   PICTURE 99.                                CM000095
00113   005194      02  RRDR7 REDEFINES  DR7.                                  CM000095
00114   005195          03  RR7A    PICTURE X.                                 CM000095
00115   005196          03  RR7B    PICTURE X.                                 CM000095
00116   005197          03  RR7C    PICTURE X.                                 CM000095
00117   005200      02  FILLER  PICTURE  X.                                    CM000095
00118   005210      02  DR8     PICTURE  XXX.                                  CM000095
00119   005211      02  RDR8  REDEFINES  DR8.                                  CM000095
00120   005212          03  RDR8A   PICTURE X.                                 CM000095
00121   005213          03  RDR8B   PICTURE XX.                                CM000095
00122   005220      02  FILLER  PICTURE  X(10).                                CM000095
00123   005230      02  DR6     PICTURE  XX.                                   CM000095
00124   023010 WORKING-STORAGE SECTION.                                        CM000095
00125   023020 77  J        PICTURE   999.                                     CM000095
00126   023030 77  K        PICTURE   999.                                     CM000095
00127   023040 77  SW1      PICTURE   9      VALUE 0.                          CM000095
00128   023050 77  MSW1     PICTURE   9      VALUE 0.                          CM000095
00129   023060 77  MSW2     PICTURE   9      VALUE 0.                          CM000095
00130   023070 77  MSW3     PICTURE   9      VALUE 0.                          CM000095
00131   023080 77  NEG-SW   PICTURE   9      VALUE 0.                          CM000095
00132   023090 77  JJ       PICTURE   999    VALUE 0.                          CM000095
00133   023100 77  JECT     PICTURE   99     VALUE 50.                         CM000095
00134   023110 77  KK       PICTURE   999    VALUE 0.                          CM000095
00135          77  JKT   PICTURE  X  VALUE SPACE.
00136          77  N  PICTURE 999 VALUE 1.
00137 **007010 01  SCTABL.                                                     CM000095
00138   007020      02  SCAT    OCCURS  50.                                    CM000095
00139   007030          03  SC1     PICTURE  XXX.                              CM000095
00140   007040          03  SC2     PICTURE  X(9).                             CM000095
00141   007050          03  SC3     PICTURE XXX.                               CM000095
00142   007060          03  SC4     PICTURE  X(9).                             CM000095
00143   007070          03  SC5     PICTURE  X(9).                             CM000095
00144   007080          03  SC6     PICTURE  X(9).                             CM000095
00145   007090          03  SC7     PICTURE  X(9).                             CM000095
00146   007100          03  SC8     PICTURE X(9).                              CM000095
00147   007110          03  SC9     PICTURE  X(10).                            CM000095
00148   007120          03  SC10    PICTURE  X(14).                            CM000095
00149   008010 01  MTTABLE.                                                    CM000095
00150   008020      02  MTAB  OCCURS 6.                                        CM000095
00151   008030          03  MT1     PICTURE  X      OCCURS 14.                 CM000095
00152   008040          03  MT2     PICTURE  XX     OCCURS 14.                 CM000095
00153   008050          03  MT3     PICTURE  X(9)   OCCURS 14.                 CM000095
00154   008060          03  MT4     PICTURE  XXX    OCCURS 14.                 CM000095
00155   008070          03  MT5     PICTURE  X(9)   OCCURS 14.                 CM000095
00156   008080          03  MT6     PICTURE  X(9)   OCCURS 14.                 CM000095
00157   008090          03  MT7     PICTURE  X(9)   OCCURS 14.                 CM000095
00158   008100          03  MT8     PICTURE  X(9)   OCCURS 14.                 CM000095
00159   008110          03  MT9     PICTURE  X(9)   OCCURS 14.                 CM000095
00160   008120          03  MT10    PICTURE  X(10)  OCCURS 14.                 CM000095
00161   008130          03  MT11    PICTURE  X(14)  OCCURS 14.                 CM000095
00162   009010 01  OSTABLE.                                                    CM000095
00163   009020      02  DSTBL   OCCURS  6.                                     CM000095
00164   009030          03  OS1     PICTURE  X      OCCURS  36.                CM000095
00165   009040          03  OS2     PICTURE  XX     OCCURS  36.                CM000095
00166   009050          03  OS3     PICTURE  X(9)   OCCURS  36.                CM000095
00167   009060          03  OS4     PICTURE  XXX    OCCURS  36.                CM000095
00168   009070          03  OS5     PICTURE  X(9)   OCCURS  36.                CM000095
```

4

```
009080          03  OS6     PICTURE  X(9)   OCCURS  36.                CM000095
009090          03  OS7     PICTURE  X(9)   OCCURS  36.                CM000095
009100          03  OS8     PICTURE  X(9)   OCCURS  36.                CM000095
009110          03  OS9     PICTURE  X(9)   OCCURS  36.                CM000095
009120          03  OS10    PICTURE  X(10)  OCCURS  36.                CM000095
009130          03  OS11    PICTURE  X(14)  OCCURS  36.                CM000095
010010 01  MCTABLE.                                                    CM000095
010020     02  MCTBL   OCCURS 3.                                       CM000095
010030          03  MC1     PICTURE  XXX    OCCURS  100.               CM000095
010040          03  MC2     PICTURE  X(9)   OCCURS  100.               CM000095
010050          03  MC3     PICTURE  XXX    OCCURS  100.               CM000095
010060          03  MC4     PICTURE  XX     OCCURS  100.               CM000095
010070          03  MC5     PICTURE  X(9)   OCCURS  100.               CM000095
010080          03  MC6     PICTURE  XX     OCCURS  100.               CM000095
010090          03  MC7     PICTURE  X(9)   OCCURS  100.               CM000095
010100          03  MCB     PICTURE  XX     OCCURS  100.               CM000095
010110          03  MC9     PICTURE  X(9)   OCCURS  100.               CM000095
010120          03  MC10    PICTURE  XX     OCCURS  100.               CM000095
010130          03  MC11    PICTURE  X(9)   OCCURS  100.               CM000095
010140          03  MC12    PICTURE  XX     OCCURS  100.               CM000095
010150          03  MC13    PICTURE  X(9)   OCCURS  100.               CM000095
010160          03  MC14    PICTURE  X(10)  OCCURS  100.               CM000095
010170          03  MC15    PICTURE  X(14)  OCCURS  100.               CM000095
010180          03  MC16    PICTURE  XXX    OCCURS  100.               CM000095
011080 01  ODTABLE.
011090     02  DIOOLE  OCCURS 1.
011100          03  DD1     PICTURE  X      OCCURS  100.
011110          03  DD2     PICTURE  XX     OCCURS  100.
011120          03  DD3     PICTURE  X(9)   OCCURS  100.
011130          03  DD4     PICTURE  XXX    OCCURS  100.
011140          03  DD5     PICTURE  XX     OCCURS  100.
011150          03  DD6     PICTURE  X(9)   OCCURS  100.
011160          03  DD7     PICTURE  XX     OCCURS  100.
011170          03  DD8     PICTURE  X(9)   OCCURS  100.
011180          03  DD9     PICTURE  XX     OCCURS  100.
011190          03  DD10    PICTURE  X(9)   OCCURS  100.
011201 01  DOTAB2.
011202     02  DAOOLE  OCCURS 1.
**011200        03  DD11    PICTURE  XX     OCCURS  100.
011210          03  DD12    PICTURE  X(9)   OCCURS  100.
011220          03  DD13    PICTURE  XX     OCCURS  100.
011230          03  DD14    PICTURE  X(9)   OCCURS  100.
011240          03  DD15    PICTURE  X(10)  OCCURS  100.
011250          03  DD16    PICTURE  X(14)  OCCURS  100.
011260          03  DDSN    PICTURE  X      OCCURS  100.
012010 01  SRTABLE.                                                    CM000095
012020     02  SRTAB   OCCURS 4.                                       CM000095
012030          03  SR1     PICTURE  X      OCCURS 8.                  CM000095
012040          03  SR2     PICTURE  XX     OCCURS 8.                  CM000095
012050          03  SR3     PICTURE  X(9)   OCCURS 8.                  CM000095
012060          03  SR4     PICTURE  XXX    OCCURS 8.                  CM000095
012070          03  SR5     PICTURE  X(9)   OCCURS 8.                  CM000095
012080          03  SR6     PICTURE  X(9)   OCCURS 8.                  CM000095
012090          03  SR7     PICTURE  X(9)   OCCURS 8.                  CM000095
012100          03  SR8     PICTURE  X(9)   OCCURS 8.                  CM000095
012110          03  SR9     PICTURE  X(9)   OCCURS 8.                  CM000095
012120          03  SR10    PICTURE  X(10)  OCCURS 8.                  CM000095
```

```
012130          03  SR11    PICTURE  X(14)  OCCURS 8.                CM000095
012140          03  SRSN    PICTURE  X      OCCURS 8.                CM000095
013010 01  SCLIST.                                                  CM000095
013020     02  FILLER  PICTURE   X(5)   VALUE SPACE.                 CM000095
013030     02  LSC1    PICTURE   XXX.                                CM000095
013040     02  FILLER  PICTURE   XXXXXX VALUE SPACE.
013050     02  LSC2    PICTURE   X(9).                               CM000095
013060     02  FILLER  PICTURE   XXXX   VALUE SPACE.
013070     02  LSC3    PICTURE   XXX.                                CM000095
013080     02  FILLER  PICTURE   XXXX   VALUE SPACE.                 CM000095
013090     02  LSC4    PICTURE   X(9).                               CM000095
013100     02  FILLER  PICTURE   XXXX   VALUE SPACE.                 CM000095
013110     02  LSC5    PICTURE   X(9).                               CM000095
013120     02  FILLER  PICTURE   XXXX   VALUE SPACE.                 CM000095
013130     02  LSC6    PICTURE   X(9).                               CM000095
013140     02  FILLER  PICTURE   XXXX   VALUE SPACE.                 CM000095
013150     02  LSC7    PICTURE   X(9).                               CM000095
013160     02  FILLER  PICTURE   XXXX   VALUE SPACE.                 CM000095
013170     02  LSC8    PICTURE   X(9).                               CM000095
013180     02  FILLER  PICTURE   XXXX   VALUE SPACE.                 CM000095
013190     02  LSC9    PICTURE   X(10).                              CM000095
013200     02  FILLER  PICTURE   XXXX   VALUE SPACE.
013210     02  LSC10   PICTURE   X(14).                              CM000095
013220     02  FILLER  PICTURE   X(5)   VALUE SPACE.
014010 01  MTLIST.                                                   CM000095
014020     02  FILLER  PICTURE   X(5)   VALUE SPACE.                 CM000095
014030     02  LMT1    PICTURE   X.                                  CM000095
014040     02  FILLER  PICTURE   XX     VALUE SPACE.                 CM000095
014050     02  LMT2    PICTURE   99.
014060     02  FILLER  PICTURE   XXXX   VALUE SPACE.                 CM000095
014070     02  LMT3    PICTURE   X(9).                               CM000095
014080     02  FILLER  PICTURE   XXXX   VALUE SPACE.                 CM000095
014090     02  LMT4    PICTURE   XXX.                                CM000095
014100     02  FILLER  PICTURE   XXXX   VALUE SPACE.                 CM000095
014110     02  LMT5    PICTURE   X(9).                               CM000095
014120     02  FILLER  PICTURE   XXXX   VALUE SPACE.                 CM000095
014130     02  LMT6    PICTURE   X(9).                               CM000095
014140     02  FILLER  PICTURE   XXXX   VALUE SPACE.                 CM000095
014150     02  LMT7    PICTURE   X(9).                               CM000095
014160     02  FILLER  PICTURE   XXXX   VALUE SPACE.                 CM000095
014170     02  LMT8    PICTURE   X(9).                               CM000095
014180     02  FILLER  PICTURE   XXXX   VALUE SPACE.                 CM000095
014190     02  LMT9    PICTURE   X(9).                               CM000095
014200     02  FILLER  PICTURE   XXXX   VALUE SPACE.                 CM000095
014210     02  LMT10   PICTURE   X(10).                              CM000095
014220     02  FILLER  PICTURE   XXXX   VALUE SPACE.                 CM000095
014230     02  LMT11   PICTURE   X(14).                              CM000095
014240     02  FILLER  PICTURE   X(5)   VALUE SPACE.
015010 01  OSLIST.                                                   CM000095
015020     02  FILLER  PICTURE   X(5)   VALUE SPACE.                 CM000095
015030     02  LOS1    PICTURE   X.                                  CM000095
015040     02  FILLER  PICTURE   XX     VALUE SPACE.                 CM000095
015050     02  LOS2    PICTURE   99.                                 CM000095
015060     02  FILLER  PICTURE   XXXX   VALUE SPACE.                 CM000095
015070     02  LOS3    PICTURE   X(9).                               CM000095
015080     02  FILLER  PICTURE   XXXX   VALUE SPACE.                 CM000095
015090     02  LOS4    PICTURE   XXX.                                CM000095
```

6

```
00283   015100      02  FILLER  PICTURE   XXXX  VALUE SPACE.                  CM000095
00284   015110      02  LOS5    PICTURE   X(9).
00285   015120      02  FILLER  PICTURE   XXXX  VALUE SPACE.                  CM000095
00286   015130      02  LOS6    PICTURE   X(9).                                CM000095
00287   015140      02  FILLER  PICTURE   XXXX  VALUE SPACE.                  CM000095
00288   015150      02  LOS7    PICTURE   X(9).                                CM000095
00289   015160      02  FILLER  PICTURE   XXXX  VALUE SPACE.                  CM000095
00290   015170      02  LOS8    PICTURE   X(9).                                CM000095
00291   015180      02  FILLER  PICTURE   XXXX  VALUE SPACE.                  CM000095
00292   015190      02  LOS9    PICTURE   X(9).                                CM000095
00293   015200      02  FILLER  PICTURE   XXXX  VALUE SPACE.                  CM000095
00294   015210      02  LOS10   PICTURE   X(10).                               CM000095
00295   015220      02  FILLER  PICTURE   XXXX  VALUE SPACE.                  CM000095
00296   015230      02  LOS11   PICTURE   X(14).                               CM000095
00297   015240      02  FILLER  PICTURE   X(5)  VALUE SPACE.
00298   016010 01   MCLIST.                                                    CM000095
00299   016020      02  FILLER  PICTURE   X(5)   VALUE SPACE.                  CM000095
00300   016030      02  LMC1    PICTURE   999.                                 CM000095
00301   016040      02  FILLER  PICTURE   XXXX   VALUE SPACE.                  CM000095
00302   016050      02  LMC2    PICTURE   X(9).                                CM000095
00303   016060      02  FILLER  PICTURE   XX     VALUE SPACE.                  CM000095
00304   016070      02  LMC3    PICTURE   XXX.                                 CM000095
00305   016080      02  FILLER  PICTURE   XX     VALUE SPACE.                  CM000095
00306   016090      02  LMC4    PICTURE   XX.                                  CM000095
00307   016100      02  FILLER  PICTURE   XX     VALUE SPACE.                  CM000095
00308   016110      02  LMC5    PICTURE   X(9).                                CM000095
00309   016120      02  FILLER  PICTURE   XX     VALUE SPACE.                  CM000095
00310   016130      02  LMC6    PICTURE   XX.                                  CM000095
00311   016140      02  FILLER  PICTURE   XX     VALUE SPACE.                  CM000095
00312   016150      02  LMC7    PICTURE   X(9).                                CM000095
00313   016160      02  FILLER  PICTURE   XX     VALUE SPACE.                  CM000095
00314   016170      02  LMC8    PICTURE   XX.                                  CM000095
00315   016180      02  FILLER  PICTURE   XX     VALUE SPACE.                  CM000095
00316   016190      02  LMC9    PICTURE   X(9).                                CM000095
00317   016200      02  FILLER  PICTURE   XX     VALUE SPACE.                  CM000095
00318   016210      02  LMC10   PICTURE   XX.                                  CM000095
00319   016220      02  FILLER  PICTURE   XX     VALUE SPACE.                  CM000095
00320   016230      02  LMC11   PICTURE   X(9).                                CM000095
00321   016240      02  FILLER  PICTURE   XX     VALUE SPACE.                  CM000095
00322   016250      02  LMC12   PICTURE   XX.                                  CM000095
00323   017010      02  FILLER  PICTURE   XX     VALUE SPACE.                  CM000095
00324   017020      02  LMC13   PICTURE   X(9).                                CM000095
00325   017030      02  FILLER  PICTURE   XX     VALUE SPACE.                  CM000095
00326   017040      02  LMC14   PICTURE   X(10).                               CM000095
00327   017050      02  FILLER  PICTURE   XX     VALUE SPACE.                  CM000095
00328   017060      02  LMC15   PICTURE   X(14).                               CM000095
00329   017070      02  FILLER  PICTURE   XX     VALUE SPACE.                  CM000095
00330   017080      02  LMC16   PICTURE   X      VALUE SPACE.                  CM000095
00331   019010 01   DDLIST.                                                    CM000095
00332   019020      02  FILLER  PICTURE  X(4)   VALUE SPACE.                   CM000095
00333   019030      02  LDD1    PICTURE  Z.
00334   019040      02  FILLER  PICTURE   XX    VALUE SPACE.
00335   019050      02  LDD2    PICTURE Z99.
00336   019060      02  FILLER  PICTURE  XX     VALUE SPACE.                   CM000095
00337   019070      02  LDD3    PICTURE  X(9).                                 CM000095
00338   019080      02  FILLER  PICTURE  XX     VALUE SPACE.                   CM000095
00339   019090      02  LDD4    PICTURE  XXX.                                  CM000095
```

7

```
00340   019100     02  FILLER  PICTURE  XX     VALUE SPACE.                    CM000095
00341   019110     02  LOD5    PICTURE  XX.                                    CM000095
00342   019111     02  FILLER  PICTURE  X   VALUE SPACE.
00343   019120     02  FILLERI PICTURE  XX     VALUE SPACE.                    CM000095
00344   019130     02  LDD6    PICTURE  X(9).                                  CM000095
00345   019140     02  FILLER  PICTURE  X  VALUE SPACE.
00346   019150     02  LOD7    PICTURE  XX.                                    CM000095
00347   019151     02  FILLER  PICTURE  X  VALUE SPACE.
00348   019160     02  FILLER2 PICTURE  XX     VALUE SPACE.                    CM000095
00349   019170     02  LOD8    PICTURE  X(9).                                  CM000095
00350   019180     02  FILLER  PICTURE  X  VALUE SPACE.
00351   019190     02  LDD9    PICTURE  XX.                                    CM000095
00352   019191     02  FILLER  PICTURE  X  VALUE SPACE.
00353   019200     02  FILLER3 PICTURE  XX     VALUE SPACE.                    CM000095
00354   019210     02  LDD10   PICTURE  X(9).                                  CM000095
00355   019220     02  FILLER  PICTURE  X  VALUE SPACE.
00356   019230     02  LDD11   PICTURE  XX.                                    CM000095
00357   019231     02  FILLER  PICTURE  X  VALUE SPACE.
00358   019240     02  FILLER4 PICTURE  XX     VALUE SPACE.                    CM000095
00359   019250     02  LDD12   PICTURE  X(9).                                  CM000095
00360   020010     02  FILLER  PICTURE  X  VALUE SPACE.
00361   020020     02  LOD13   PICTURE  XX.                                    CM000095
00362   020021     02  FILLER  PICTURE  X  VALUE SPACE.
00363   020030     02  FILLER5 PICTURE  XX     VALUE SPACE.                    CM000095
00364   020040     02  LDD14   PICTURE  X(9).                                  CM000095
00365   020050     02  FILLER  PICTURE  X  VALUE SPACE.
00366   020060     02  LOD15   PICTURE  X(10).                                 CM000095
00367   020070     02  FILLER  PICTURE  XX     VALUE SPACE.                    CM000095
00368   020080     02  LDD16   PICTURE  X(14).                                 CM000095
00369   020090     02  FILLER  PICTURE  XXX    VALUE SPACE.                    CM000095
00370   022080 01  HEADMCDD.                                                   CM000095
00371   022090     02  MCDO    PICTURE  X(12)  VALUE '    SCAN    '.           CM000095
00372   022100     02  FILLER  PICTURE  X(113) VALUE 'PARAMETER UNIT CODE   LOADCM000095
00373   022110-    '    CODE   LOAD    CODE   LOAD    CODE   LOAD    CODE   LOADCM000095
00374   022120-    '     REFERENCE     REMARKS'.                              CM000095
00375   022130     02  FILLER  PICTURE  X(7)   VALUE SPACE.                    CM000095
00376   023010 01  DDAS-HD.
00377   023020     02  FILLER  PICTURE  X(48)  VALUE SPACE.
00378   023030     02  FILLER  PICTURE X(31)   VALUE 'DIGITAL DATA ACQUISITION S
00379   023040-    'YSTEM'.
00380   023050     02  FILLER  PICTURE  X(32)  VALUE SPACE.
00381   023060     02  FILLER  PICTURE  X(14)   VALUE 'SHEET    OF  R'.
00382   023070     02  FILLER  PICTURE  X(7)    VALUE SPACE.
00383 **021010 01  SRLIST.                                                     CM000095
00384   021020     02  FILLER  PICTURE  X(5)   VALUE SPACE.                    CM000095
00385   021030     02 LSR1    PICTURE X  VALUE SPACE.
00386   021040     02  FILLER  PICTURE  XX     VALUE SPACE.                    CM000095
00387   021050     02  LSR2    PICTURE  99.                                    CM000095
00388   021060     02  FILLER  PICTURE  XXXX   VALUE SPACE.
00389   021070     02  LSR3    PICTURE  X(9).                                  CM000095
00390   021080     02  FILLER  PICTURE  XXXX   VALUE SPACE.
00391   021090     02  LSR4    PICTURE  XXX.                                   CM000095
00392   021100     02  FILLERA PICTURE  XXXX   VALUE SPACE.                    CM000095
00393   021110     02  LSR5    PICTURE  X(9).                                  CM000095
00394   021120     02  FILLERB PICTURE  XXXX   VALUE SPACE.                    CM000095
00395   021130     02  LSR6    PICTURE  X(9).                                  CM000095
00396   021140     02  FILLERC PICTURE  XXXX   VALUE SPACE.
```

8

```
00397   021150      02  LSR7     PICTURE  X(9).                                    CM000095
00398   021160      02  FILLERO  PICTURE  XXXX    VALUE SPACE.                     CM000095
00399   021170      02  LSR8     PICTURE  X(9).                                    CM000095
00400   021180      02  FILLERE  PICTURE  XXXX    VALUE SPACE.                     CM000095
00401   021190      02  LSR9     PICTURE  X(9).                                    CM000095
00402   021200      02  FILLER   PICTURE  XXXX    VALUE SPACE.                     CM000095
00403   021210      02  LSR10    PICTURE  X(10).                                   CM000095
00404   021220      02  FILLER   PICTURE  XXXX    VALUE SPACE.                     CM000095
00405   021230      02  LSR11    PICTURE  X(14).                                   CM000095
00406   021240      02  FILLER   PICTURE  X(5)    VALUE SPACE.
00407   022010 01   HEADSMOS.                                                      CM000095
00408   022020      02  SCMTD    PICTURE  X(12)   VALUE '   ST CH    '.            CM000095
00409   022030      02  FILLER   PICTURE  X(120)  VALUE ' PARAMETER  UNITS   RNO
00410   022040-     ' EQUIV    RN1 EQUIV    RN2 EQUIV    RN3 EQUIV    RN4 EQUIV
00411   022050-     ' REFERENCE        REMARKS          '.
00412   023010 01   SC-HD.
00413   023020      02  FILLER   PICTURE  X(43)   VALUE SPACE.
00414   023030      02  FILLIE   PICTURE  X(36)   VALUE 'STRIP CHART DATA REDUCTION
00415   023040-     '          '.
00416   023050      02  FILLER   PICTURE  X(29)   VALUE SPACE.
00417   023060      02  FILLER   PICTURE  X(14)   VALUE 'SHEET    OF   R'.
00418   023070      02  FILLER   PICTURE  X(10)   VALUE SPACE.
00419   023090 01   MT-HO.
00420   023100      02  FILLER   PICTURE  X(43)   VALUE SPACE.
00421   023110      02  FLLX     PICTURE  X(15)   VALUE 'MAGNETIC TAPE -'.
00422   023120      02  FLP      PICTURE  X.
00423   023130      02  FILLER   PICTURE  X(16)   VALUE '- DATA REDUCTION'.
00424   023140      02  FILLER   PICTURE  X(33)   VALUE SPACE.
00425   023150      02  FILLER   PICTURE  X(14)   VALUE 'SHEET    OF   R'.
00426   023160      02  FILLER   PICTURE  X(10)   VALUE SPACE.
00427   023180 01   MC-HO.
00428   023190      02  FILLER   PICTURE  X(53)   VALUE SPACE.
00429   023200      02  FIXR     PICTURE  X(32)   VALUE 'MICROSADIC DATA REDUCTION
00430   023210-     '        '.
00431   023220      02  FILLER   PICTURE  X(26)   VALUE SPACE.
00432   023230      02  FILLER   PICTURE  X(14)   VALUE 'SHEET    OF   R'.
00433   023240      02  FILLER   PICTURE  X(7)    VALUE SPACE.
00434   024010 01   DUM-HEAO.
00435   024020      02  SCF      PICTURE  X(32)   VALUE 'SCANNER VALVE DATA REDUCTI
00436   024030-     'DN     '.
00437   024040      02  OSF      PICTURE  X(15)   VALUE ' OSCILLOGRAPH -'.
00438   024050      02  SRF      PICTURE  X(32)   VALUE 'SANBORN RECORDER DATA REDU
00439   024060-     'CTION.'.
00440   030010 PROCEDURE DIVISION.                                                 CM000095
00441   030020      OPEN INPUT CARD  OUTPUT DCARD.                                 CM000095
00442   030021      OPEN OUTPUT LIST.
00443   030030 P1.                                                                 CM000095
00444   030040      READ CARD AT END GO TO P2.                                     CM000095
00445   030050      WRITE DCAR FROM CAR.                                           CM000095
00446   030060      GO TO P1.                                                      CM000095
00447   030070 P2.                                                                 CM000095
00448   030080      CLOSE CARD.
00449   030100      OPEN INPUT HOOK.                                               CM000095
00450   030130      PERFORM SPACE-T8.                                              CM000095
00451 **030110      PERFORM OP-BF THRU BEND.                                       CM000095
00452   030120      PERFORM DO-U THRU ALL-OO.                                      CM000095
00453   031010 RD-HK.                                                              CM000095
```

```
031131.     CLOSE DCARD.
**031012 RD-HK1.
031020      READ HOOK AT END GO TO HK-END.                                CM000095
            IF HR3 = 'A' MOVE 1 TO N.
            IF HR3 = 'B' MOVE 2 TO N.
            IF HR3 = 'C' MOVE 3 TO N.
            IF HR3 = 'D' MOVE 4 TO N.
            IF HR3 = 'E' MOVE 5 TO N.
            IF HR3 = 'F' MOVE 6 TO N.
031030      IF HR12 = 'SC' GO TO MN1.                                     CM000095
031040      IF HR12 = 'MT' GO TO MN2.                                     CM000095
031050      IF HR12 = 'OS' GO TO MN3.                                     CM000095
031060      IF HR12 = 'MC' GO TO MN4.                                     CM000095
031090      IF HR12 = 'OD' GO TO MN6.                                     CM000095
031100      IF HR12 = 'SR' GO TO MN7.                                     CM000095
031110      GO TO RD-HK1.
031130 MN1.                                                               CM000095
             MOVE HPAR TO SC2 (R345).
031140      OPEN INPUT DCARD.                                             CM000095
031150 MN1A.                                                              CM000095
031160      READ DCARD AT END GO TO MN1Z.                                 CM000095
031170      IF DR1 NOT = HPAR GO TO MN1A.                                 CM000095
031180      IF DR2 = '  ' GO TO MN1Z.                                     CM000095
031200      GO TO SC-ROUTE.                                               CM000095
031210 MN2.                                                               CM000095
            MOVE HPAR TO MT3 (N,RHR45).
031220      OPEN INPUT DCARD.                                             CM000095
031230 MN2A.                                                              CM000095
031240      READ DCARD AT END GO TO MN1Z.                                 CM000095
031250      IF DR1 NOT = HPAR GO TO MN2A.                                 CM000095
032010      IF DR4 = '  ' GO TO MN1Z.                                     CM000095
032030      GO TO MT-ROUTE.                                               CM000095
032040 MN3.                                                               CM000095
            MOVE HPAR TO OS3 (N,RHR45).
032050      OPEN INPUT DCARD.                                             CM000095
032060 MN3A.                                                              CM000095
032070      READ DCARD AT END GO TO MN1Z.                                 CM000095
032080      IF DR1 NOT = HPAR GO TO MN3A.                                 CM000095
032090      IF DR3 = '  ' GO TO MN1Z.
032110      GO TO OS-ROUT.
032120 MN4.                                                               CM000095
            IF R345 < 100 MOVE 1 TO J MOVE R345 TO K GO TO BLUE.
            IF R345 < 200 SUBTRACT 100 FROM R345 GIVING K MOVE 3 TO J
                GO TO BLUE.
            SUBTRACT 400 FROM R345 GIVING K.
            MOVE 2 TO J.
        BLUE.
             MOVE HPAR TO MC2 (J,K).
032130      OPEN INPUT DCARD.                                             CM000095
032140 MN4A.                                                              CM000095
032150      READ DCARD AT END GO TO MN1Z.                                 CM000095
032160      IF DR1 NOT = HPAR GO TO MN4A.                                 CM000095
032170      IF DR5 = '  ' GO TO MN1Z.                                     CM000095
032190      GO TO MC-ROUTE.                                               CM000095
032200 MN6.                                                               CM000095
            MOVE RHR45 TO K.
            IF HHR3 = 0 AND RHR45 = 0 MOVE 100 TO K.
```

10

```
00511                IF HHR3 = 0
00512                MOVE HPAR TO 003 (1,K).
00513   032210       OPEN INPUT DCARD.                                    CM000095
00514   032220 MN6A.                                                      CM000095
00515   032230       READ DCARD AT END GO TO MN1Z.                        CM000095
00516   032240       IF DR1 NOT = HPAR GO TO MN6A.                        CM000095
00517   032250       IF DR7 = '  ' GO TO MN1Z.                            CM000095
00518   033020       GO TO OO-ROUTE.                                      CM000095
00519   033030 MN7.                                                       CM000095
00520                MOVE HPAR TO SR3 (HHR3,RHB45).
00521   033040       OPEN INPUT DCARD.                                    CM000095
00522   033050 MN7A.                                                      CM000095
00523   033060       READ DCARD AT END GO TO MN1Z.                        CM000095
00524   033070       IF DR1 NOT = HPAR GO TO MN7A.                        CM000095
00525   033080       IF DR8 = '  ' GO TO MN1Z.                            CM000095
00526   033100       GO TO SR-ROUTE.
00527   033110 MN1Z.                                                      CM000095
00528   033120       DISPLAY 'DATA REQ. N/A ' DR1.                        CM000095
00529   033140       GO TO RD-HK.                                         CM000095
00530   034010 SC-ROUTE.                                                  CM000095
00531   034011       MOVE JJ TO J.
00532   034020       PERFORM MTH-RO VARYING K FROM 1 BY 1 UNTIL K > J OR SW1 = 1. CM000095
00533   034070       MOVE 0 TO SW1.                                       CM000095
00534 **034030       IF K > J DISPLAY 'SC1 NOT = READ' GO TO RO-HK. GO TO SCR1. CM000095
00535   034040 MTH-RO.                                                    CM000095
00536   034050       IF HR345 = SC1 (K) MOVE 1 TO SW1.                    CM000095
00537   034060 SCR1.                                                      CM000095
00538   034071       COMPUTE K = K - 1.
00539   034080       IF ROR2 = 'M' MOVE 'MV CALS' TO SC10 (K) GO TO SCR10. CM000095
00540   034090       IF ROR2 = 'I' MOVE 'IN PLACE CALS' TO SC10 (K) GO TO SCR10. CM000095
00541   034100       IF ROR2 = 'S' MOVE 'SPECIAL CALS' TO SC10 (K) GO TO SCR10. CM000095
00542   034110       IF ROR2 NOT = 'R' DISPLAY '3411' DR2  GO TO RO-HK.   CM000095
00543   034120       OPEN INPUT CFILE.                                    CM000095
00544   034130 SCR2.                                                      CM000095
00545   034140       READ CFILE AT END GO TO CEND.                        CM000095
00546   034150       IF C9 NOT = '0' GO TO SCR2.
00547   034160       IF HPAR NOT = C5 GO TO SCR2.                         CM000095
00548   034170       IF C10 = SPACE GO TO SCR3.                           CM000095
00549   034180       MOVE C10 TO SC4 (K).                                 CM000095
00550   034200       READ CFILE AT END GO TO CEND.                        CM000095
00551   034220       MOVE C10 TO SC5 (K).                                 CM000095
00552   034240       READ CFILE AT END GO TO CEND.                        CM000095
00553   035010       MOVE C10 TO SC6 (K).                                 CM000095
00554   035030       READ CFILE AT END GO TO CEND.                        CM000095
00555   035050       MOVE C10 TO SC7 (K).                                 CM000095
00556   035070       READ CFILE AT END GO TO CEND.                        CM000095
00557   035090       MOVE C10 TO SC8 (K).                                 CM000095
00558   035110       GO TO SCR9.                                          CM000095
00559   035120 SCR3.                                                      CM000095
00560   035130       IF C11 = SPACE DISPLAY 'C10 C11 = SPACE 3513' GO TO CEND. CM000095
00561   035140       MOVE C11 TO SC4 (K).                                 CM000095
00562   035160       READ CFILE AT END GO TO CEND.                        CM000095
00563   035180       MOVE C11 TO SC5 (K).                                 CM000095
00564   035200       READ CFILE AT END GO TO CEND.                        CM000095
00565   035220       MOVE C11 TO SC6 (K).                                 CM000095
00566   035240       READ CFILE AT END GO TO CEND.                        CM000095
00567   036010       MOVE C11 TO SC7 (K).                                 CM000095
```

11

```
036030      READ CFILE AT END GO TO CEND.                                CM000095
036050      MOVE C11 TO SC8 (K).                                         CM000095
036070 SCR9.                                                             CM000095
036080      MOVE C11B TO SC3 (K).                                        CM000095
036200      CLOSE CFILE.                                                 CM000095
**036090 SCR10.                                                          CM000095
036100      IF DR6 = 'CP' MOVE 'CELL PRESS' TO SC9 (K) GO TO SCR11.      CM000095
036110      IF OR6 = 'BA' MOVE 'BAROMETER ' TO SC9 (K) GO TO SCR11.      CM000095
036120      IF DR6 = 'VR' MOVE 'VAC. REF. ' TO SC9 (K) GO TO SCR11.      CM000095
036130      IF OR6 = 'RT' MOVE 'RTT       ' TO SC9 (K) GO TO SCR11.      CM000095
036140      IF DR6 = 'CA' MOVE 'CA-150 D-F' TO SC9 (K) GO TO SCR11.      CM000095
036150      IF DR6 = 'CC' MOVE 'CC-150 O-F' TO SC9 (K) GO TO SCR11.      CM000095
036160      IF DR6 = 'IC' MOVE 'IC-150 D-F' TO SC9 (K) GO TO SCR11.      CM000095
036170      IF OR6 = 'EV' MOVE 'EVENT     ' TO SC9 (K).                  CM000095
036180 SCR11.                                                            CM000095
036190      MOVE HPAR TO SC2 (K).                                        CM000095
036210      GO TO RD-HK.                                                 CM000095
036220 CEND.                                                             CM000095
036230      DISPLAY '3623'                                               CM000095
036240      CLOSE CFILE.                                                 CM000095
036250      GO TO RD-HK.                                                 CM000095
037010 MT-ROUTE.                                                         CM000095
037020      IF HR3 = 'A' MOVE 1 TO J.                                    CM000095
037030      IF HR3 = 'B' MOVE 2 TO J.                                    CM000095
037040      IF HR3 = 'C' MOVE 3 TO J.                                    CM000095
037050      IF HR3 = 'O' MOVE 4 TO J.                                    CM000095
037060      IF HR3 = 'E' MOVE 5 TO J.                                    CM000095
037070      IF HR3 = 'F' MOVE 6 TO J.                                    CM000095
037080      MOVE RHR45 TO K.                                             CM000095
037090      IF DR4B = 'M' MOVE 'MV CALS' TO MT11 (J, K) GO TO MTR10.     CM000095
037100      IF OR4B = 'I' MOVE 'IN PLACE CALS' TO MT11 (J, K)            CM000095
037110          GO TO MTR10.                                             CM000095
037120      IF DR4B = 'S' MOVE 'SPECIAL CAL' TO MT11 (J, K) GO TO MTR10. CM000095
037130      IF DR4B NOT = 'R' DISPLAY '3713' GO TO RO-HK.                CM000095
037140      OPEN INPUT CFILE.                                            CM000095
037150 MTR1.                                                             CM000095
037160      READ CFILE AT END GO TO MCEND.                               CM000095
037170      IF C9 NOT = 'O' GO TO MTR1.
037180      IF HPAR NOT = C5 GO TO MTR1.                                 CM000095
037190      IF C10 = SPACE GO TO MTR2.                                   CM000095
037200      MOVE C10 TO MT5 (J, K).                                      CM000095
037210      READ CFILE AT END GO TO MCEND.                               CM000095
037220      MOVE C10 TO MT6 (J, K).                                      CM000095
037230      READ CFILE AT END GO TO MCEND.                               CM000095
037240      MOVE C10 TO MT7 (J, K).                                      CM000095
037250      READ CFILE AT END GO TO MCEND.                               CM000095
038010      MOVE C10 TO MT8 (J, K).                                      CM000095
038020      READ CFILE AT END GO TO MCEND.                               CM000095
038030      MOVE C10 TO MT9 (J, K).                                      CM000095
038040      GO TO MTR9.                                                  CM000095
038050 MTR2.                                                             CM000095
038060      IF C11 = SPACE DISPLAY 'C10 C11 = SPACE' C7  GO TO MCEND.    CM000095
038070      MOVE C11 TO MT5 (J, K).                                      CM000095
038080      READ CFILE AT END GO TO MCEND.                               CM000095
038090      MOVE C11 TO MT6 (J, K).                                      CM000095
038100      READ CFILE AT END GO TO MCEND.                               CM000095
038110      MOVE C11 TO MT7 (J, K).                                      CM000095
```

12

```
00625   038120      READ CFILE AT END GO TO MCENO.                          CM000095
00626   038130      MOVE C11 TO MT8 (J, K).                                 CM000095
00627   038140      READ CFILE AT END GO TO MCEND.                          CM000095
00628   038150      MOVE C11 TO MT9 (J, K).                                 CM000095
00629   038160 MTR9.                                                        CM000095
00630   038170      MOVE C118 TO MT4 (J, K).                                CM000095
00631   039120      CLOSE CFILE.                                            CM000095
00632 **039010 MTR10.                                                       CM000095
00633   039020      IF OR6 = 'CP' MOVE 'CELL PRESS'  TO MT10 (J, K) GO TO MTR11. CM000095
00634   039030      IF OR6 = 'BA' MOVE 'BAROMETER '  TO MT10 (J, K) GO TO MTR11. CM000095
00635   039040      IF OR6 = 'VR' MOVE 'VAC. REF. '  TO MT10 (J, K) GO TO MTR11. CM000095
00636   039050      IF OR6 = 'RT' MOVE 'RTT        '  TO MT10 (J, K) GO TO MTR11. CM000095
00637   039060      IF OR6 = 'CA' MOVE 'CA-150 D-F'  TO MT10 (J, K) GO TO MTR11. CM000095
00638   039070      IF OR6 = 'CC' MOVE 'CC-150 D-F'  TO MT10 (J, K) GO TO MTR11. CM000095
00639   039080      IF OR6 = 'IC' MOVE 'IC-150 D-F'  TO MT10 (J, K) GO TO MTR11. CM000095
00640   039090      IF OR6 = 'EV' MOVE 'EVENT      '  TO MT10 (J, K).          CM000095
00641   039100 MTR11.                                                       CM000095
00642   039110      MOVE HPAR TO MT3 (J, K).                                CM000095
00643   039130      GO TO RD-HK.                                            CM000095
00644   039140 MCENO.                                                       CM000095
00645   039150      DISPLAY '3915'.                                         CM000095
00646   039160      CLOSE CFILE.                                            CM000095
00647   039170      GO TO RD-HK.                                            CM000095
00648   040010 OS-ROUT.                                                     CM000095
00649   040020      IF HR3 = 'A' MOVE 1 TO J GO TO OSR1.                    CM000095
00650   040030      IF HR3 = 'B' MOVE 2 TO J GO TO OSR1.                    CM000095
00651   040040      IF HR3 = 'C' MOVE 3 TO J GO TO OSR1.                    CM000095
00652   040050      IF HR3 = 'D' MOVE 4 TO J GO TO OSR1.                    CM000095
00653   040060      IF HR3 = 'E' MOVE 5 TO J GO TO OSR1.                    CM000095
00654   040070      IF HR3 = 'F' MOVE 6 TO J.                               CM000095
00655   040071 OSR1.                                                        CM000095
00656   040080      IF RHR45 > 34 DISPLAY 'OS-ROOT > 34' HROOUT GO TO RO-HK. CM000095
00657   040090      MOVE RHR45 TO K.                                        CM000095
00658   040100      IF OR3B = 'M' MOVE 'MV CALS' TO OS11 (J, K) GO TO OSR10. CM000095
00659   040110      IF OR3B = 'I' MOVE 'IN PLACE CALS' TO OS11 (J, K) GO TO CM000095
00660   040120       OSR10.                                                 CM000095
00661   040130      IF OR3B = 'S' MOVE 'SPECIAL CAL' TO OS11 (J, K) GO TO OSR10. CM000095
00662   040140      IF DR3B NOT = 'R' DISPLAY '4014' OR3  GO TO RD-HK.      CM000095
00663   040150      OPEN INPUT CFILE.                                       CM000095
00664   040160 OSR2.                                                        CM000095
00665   040170      READ CFILE AT END GO TO OSCENO.                         CM000095
00666   040180      IF C9 NOT = '0' GO TO OSR2.
00667   040190      IF HPAR NOT = C5 GO TO OSR2.                            CM000095
00668   040200      IF C10 = SPACE GO TO OSR3.                              CM000095
00669   040210      MOVE C10 TO OS5 (J, K).                                 CM000095
00670   040220      READ CFILE AT END GO TO OSCENO.                         CM000095
00671   040230      MOVE C10 TO OS6 (J, K)                                  CM000095
00672   040240      READ CFILE AT END GO TO OSCEND.                         CM000095
00673   040250      MOVE C10 TO OS7 (J, K).                                 CM000095
00674   041010      READ CFILE AT END GO TO OSCENO.                         CM000095
00675   041020      MOVE C10 TO OS8 (J, K).                                 CM000095
00676   041030      READ CFILE AT END GO TO OSCENO.                         CM000095
00677   041040      MOVE C10 TO OS9 (J, K).                                 CM000095
00678   041050      GO TO OSR9.                                             CM000095
00679   041060 OSR3.                                                        CM000095
00680   041070      IF C11 = SPACE DISPLAY '4107' C7 GO TO OSCENO.          CM000095
00681   041080      MOVE C11 TO OS5 (J, K).                                 CM000095
```

13

```
041090      READ CFILE AT END GO TO OSCEND.                                CM000095
041100      MOVE C11 TO OS6 (J, K).                                        CM000095
041110      READ CFILE AT END GO TO OSCEND.                                CM000095
041120      MOVE C11 TO OS7 (J, K).                                        CM000095
041130      READ CFILE AT END GO TO OSCEND.                                CM000095
041140      MOVE C11 TO OS8 (J, K).                                        CM000095
041150      READ CFILE AT END GO TO OSCEND.                                CM000095
041160      MOVE C11 TO OS9 (J, K).                                        CM000095
041170 OSR9.                                                               CM000095
041180      MOVE C118 TO OS4 (J, K).                                       CM000095
042120      CLOSE CFILE.                                                   CM000095
**042010 OSR10.                                                            CM000095
042020      IF OR6 = 'CP' MOVE 'CELL PRESS ' TO OS10 (J, K) GO TO OOPS.    CM000095
042030      IF OR6 = 'BA' MOVE 'BAROMETER  ' TO OS10 (J, K) GO TO OOPS.    CM000095
042040      IF OR6 = 'VR' MOVE 'VAC. REF.  ' TO OS10 (J, K) GO TO OOPS.    CM000095
042050      IF DR6 = 'RT' MOVE 'RTT        ' TO OS10 (J, K) GO TO OOPS.    CM000095
042060      IF DR6 = 'CA' MOVE 'CA-1500-F  ' TO OS10 (J, K) GO TO OOPS.    CM000095
042070      IF OR6 = 'CC' MOVE 'CC-1500-F  ' TO OS10 (J, K) GO TO OOPS.    CM000095
042080      IF OR6 = 'IC' MOVE 'IC-1500-F  ' TO OS10 (J, K) GO TO OOPS.    CM000095
042090      IF DR6 = 'EV' MOVE 'EVENT      ' TO OS10 (J, K).               CM000095
042100 OOPS.                                                               CM000095
042110      MOVE HPAR TO OS3 (J, K)                                        CM000095
042130      GO TO RD-HK.                                                   CM000095
042140 OSCEND.                                                             CM000095
042150      DISPLAY '4215'                                                 CM000095
042160      CLOSE CFILE.                                                   CM000095
042170      GO TO RD-HK.                                                   CM000095
043010 MC-ROUTE.                                                           CM000095
043020      IF R345 < 100 MOVE 1 TO MSW1 J MOVE R345 TO K GO TO MCR1.      CM000095
043030      IF R345 < 200 MOVE 1 TO MSW3 SUBTRACT 100 FROM R345 GIVING K CM000095
043040          MOVE 3 TO J GO TO MCR1.                                    CM000095
043050      IF R345 < 400 DISPLAY '4305' HRDOUT GO TO RD-HK.               CM000095
043060      IF R345 > 499 DISPLAY '4306' HRDOUT GO TO RD-HK.               CM000095
043070      MOVE 1 TO MSW2  SUBTRACT 400 FROM R345 GIVING K                CM000095
043080      MOVE 2 TO J.                                                   CM000095
043090 MCR1.                                                               CM000095
043091      COMPUTE K = K + 1
043100      IF OR58 = 'M' GO TO MCR2.                                      CM000095
043110      IF OR58 = 'I' MOVE '(N PLACE CALS' TO MC15 (J, K)              CM000095
043120          GO TO MCR10.                                               CM000095
043130      IF DR58 = 'S' MOVE 'SPECIAL CAL' TO MC15 (J, K) GO TO MCR10.   CM000095
043140      IF DR58 NOT = 'R' DISPLAY '4314' DR5 GO TO RD-HK.              CM000095
043150      OPEN INPUT CFILE.                                              CM000095
043160 MCR3.                                                               CM000095
043170      READ CFILE AT END GO TO MCCEND.                                CM000095
043180      IF C9 NOT = '0' GO TO MCR3.
043190      IF HPAR NOT = C5 GO TO MCR3.                                   CM000095
043200      IF DR5A = '1'                                                  CM000095
043210          MOVE '05' TO MC4 (J, K)                                    CM000095
043220          MOVE '06' TO MC6 (J, K)                                    CM000095
043230          MOVE '07' TO MC8 (J, K)                                    CM000095
043240          MOVE '08' TO MC10 (J, K)                                   CM000095
043250          MOVE '09' TO MC12 (J, K)                                   CM000095
044010          GO TO MCR4.                                                CM000095
044020      IF DR5A = '2' OR '3'                                           CM000095
044030          MOVE '25' TO MC4 (J, K)                                    CM000095
044040          MOVE '26' TO MC6 (J, K)                                    CM000095
```

14

```
044050          MOVE '27' TO MC8 (J, K)                                  CM000095
044060          MOVE '28' TO MC10 (J, K)                                 CM000095
044070          MOVE '29' TO MC12 (J, K)                                 CM000095
044080          GO TO MCR4.                                              CM000095
044090      IF OR5A = '4'                                                CM000095
044100          MOVE '45' TO MC4 (J, K)                                  CM000095
044110          MOVE '46' TO MC6 (J, K)                                  CM000095
044120          MOVE '47' TO MC8 (J, K)                                  CM000095
044130          MOVE '48' TO MC10 (J, K)                                 CM000095
044140          MOVE '49' TO MC12 (J, K)                                 CM000095
044150          GO TO MCR4.                                              CM000095
044160      IF OR5A = '5'                                                CM000095
044170          MOVE '65' TO MC4 (J, K)                                  CM000095
044180          MOVE '66' TO MC6 (J, K)                                  CM000095
044190          MOVE '67' TO MC8 (J, K)                                  CM000095
044200          MOVE '68' TO MC10 (J, K)                                 CM000095
044210          MOVE '69' TO MC12 (J, K)                                 CM000095
044220          GO TO MCR4.     CLOSE CFILE.                             CM000095
044230      DISPLAY '4423' OR5 GO TO RD-HK.                              CM000095
045010 MCR4.                                                             CM000095
045020      IF C10 = SPACE GO TO MCR5.                                   CM000095
045030      MOVE C10 TO MC5 (J, K)                                       CM000095
045040      READ CFILE AT END GO TO MCCEND.                              CM000095
045050      MOVE C10 TO MC7 (J, K).                                      CM000095
045060      READ CFILE AT END GO TO MCCEND.                              CM000095
045070      MOVE C10 TO MC9 (J, K).                                      CM000095
045080      READ CFILE AT END GO TO MCCEND.                              CM000095
045090      MOVE C10 TO MC11 (J, K).                                     CM000095
045100      READ CFILE AT END GO TO MCCEND.                              CM000095
045110      MOVE C10 TO MC13 (J, K).                                     CM000095
045120      GO TO MCR9.                                                  CM000095
045130 MCR5.                                                             CM000095
045140      IF C11 = SPACE DISPLAY '4514' C7 GO TO MCCEND.               CM000095
045150      MOVE C11 TO MC5 (J, K)                                       CM000095
045160      READ CFILE AT END GO TO MCCEND.                              CM000095
045170      MOVE C11 TO MC7 (J, K)                                       CM000095
045180      READ CFILE AT END GO TO MCCEND.                              CM000095
045190      MOVE C11 TO MC9 (J, K)                                       CM000095
045200      READ CFILE AT END GO TO MCCEND.                              CM000095
045210      MOVE C11 TO MC11 (J, K).                                     CM000095
045220      READ CFILE AT END GO TO MCCEND.                              CM000095
045230      MOVE C11 TO MC13 (J, K).                                     CM000095
045240 MCR9.                                                             CM000095
045250      MOVE C11B TO MC3 (J, K).                                     CM000095
046120      CLOSE CFILE.                                                 CM000095
**046010 MCR10.                                                          CM000095
046020      IF DR6 = 'CP' MOVE 'CELL PRESS' TO MC14 (J, K) GO TO MUMP.   CM000095
046030      IF DR6 = 'BA' MOVE 'BAROMETER ' TO MC14 (J, K) GO TO MUMP.   CM000095
046040      IF DR6 = 'VR' MOVE 'VAC. REF. ' TO MC14 (J, K) GO TO MUMP.   CM000095
046050      IF DR6 = 'RT' MOVE 'RTT       ' TO MC14 (J, K) GO TO MUMP.   CM000095
046060      IF DR6 = 'CA' MOVE 'CA-150D-F ' TO MC14 (J, K) GO TO MUMP.   CM000095
046070      IF DR6 = 'CC' MOVE 'CC-150D-F ' TO MC14 (J, K) GO TO MUMP.   CM000095
046080      IF DR6 = '(C' MOVE '(C-150D-F ' TO MC14 (J, K) GO TO MUMP.   CM000095
046090      IF DR6 = 'EV' MOVE 'EVENT     ' TO MC14 (J, K).              CM000095
046100 MUMP.                                                             CM000095
046110      MOVE HPAR TO MC2 (J, K).                                     CM000095
046130      GO TO RD-HK.                                                 CM000095
```

15

```
046140 MCCEND.                                                          CM000095
046150     DISPLAY '4615'                                               CM000095
046160     CLOSE CFILE                                                  CM000095
046170     GO TO RD-HK.                                                 CM000095
046180 MCR2.                                                            CM000095
046190     IF DR5A = '1'                                                CM000095
046200         MOVE '01' TO MC4 (J, K)                                  CM000095
046210         MOVE '02' TO MC6 (J, K)                                  CM000095
046220         MOVE '03' TO MC8 (J, K)                                  CM000095
046230         MOVE '04' TO MC10 (J, K)                                 CM000095
046240         GO TO MCR2A.                                             CM000095
047010     IF DR5A =  '2' OR  '3'
047020         MOVE '21' TO MC4 (J, K)                                  CM000095
047030         MOVE '22' TO MC6 (J, K)                                  CM000095
047040         MOVE '23' TO MC8 (J, K)                                  CM000095
047050         MOVE '24' TO MC10 (J, K)                                 CM000095
047060         GO TO MCR2A.                                             CM000095
047070     IF DR5A =  '4'
047080         MOVE '41' TO MC4 (J, K)                                  CM000095
047090         MOVE '42' TO MC6 (J, K)                                  CM000095
047100         MOVE '43' TO MC8 (J, K)                                  CM000095
047110         MOVE '44' TO MC10 (J, K)                                 CM000095
047120         GO TO MCR2A.                                             CM000095
047130     IF DR5A =  '5'
047140         MOVE '61' TO MC4 (J, K)                                  CM000095
047150         MOVE '62' TO MC6 (J, K)                                  CM000095
047160         MOVE '63' TO MC8 (J, K)                                  CM000095
047170         MOVE '64' TO MC10 (J, K)                                 CM000095
047180         GO TO MCR2A.                                             CM000095
047190     DISPLAY '4719' DR5  GO TO RD-HK.
047200 MCR2A.                                                           CM000095
047210     OPEN INPUT BFILE.                                            CM000095
047220 MCR2B.                                                           CM000095
047230     READ BFILE AT END GO TO MBEND.                               CM000095
047240     IF HRDOUT NOT = B3 GO TO MCR2B.                              CM000095
047250     IF B5 = 'MS01'                                               CM000095
048010         MOVE '0 MV' TO MC5 (J, K)                                CM000095
048020         MOVE '4 MV' TO MC7 (J, K)                                CM000095
048030         GO TO MCR2C.                                             CM000095
048040     IF B5 = 'MS02' OR 'MS03' OR 'MS04'                           CM000095
048050         MOVE '0 MV' TO MC5 (J, K)                                CM000095
048060         MOVE '4 MV' TO MC7 (J, K)
048070         MOVE '8 MV' TO MC9 (J, K)                                CM000095
048080         GO TO MCR2C.                                             CM000095
048090     IF B5 = 'MS05' OR 'MS06' OR 'MS07' OR 'MS08' OR 'MS09'       CM000095
048100       OR 'MS10'                                                  CM000095
048110         MOVE '0 MV' TO MC5 (J, K)                                CM000095
048120         MOVE '4 MV' TO MC7 (J, K)                                CM000095
048130         MOVE '8 MV' TO MC9 (J, K)                                CM000095
048140         MOVE '25 MV' TO MC11 (J, K)                              CM000095
048150         GO TO MCR2C.                                             CM000095
048160     DISPLAY '4816' B5  GO TO MBEND.                              CM000095
048170 MCR2C.                                                           CM000095
048180     MOVE 'MV CALS' TO MC15 (J, K).                               CM000095
048190     GO TO MCR10.                                                 CM000095
048200 MBEND.                                                           CM000095
048210     DISPLAY '4821' HRDOUT                                        CM000095
```

16

```
00853   048220      GO TO RD-HK.                                          CM000095
00854   050010 DD-ROUTE.                                                  CM000095
00855   050020      IF HHR3 NOT = 0 GO TO RD-HK.
00856   050030      MOVE 1 TO J.
00857   050040      MOVE RHR45 TO K.
00858   050050      IF RHR45 = 0 MOVE 100 TO K.
00859   050070      IF  RR7B = '0' OR '1' OR '2' OR '3' OR '4' OR '5' OR '6'   CM000095
00860   050080          OR '7' OR '8' OR '9' GO TO ODR1.                  CM000095
00861   050090      GO TO DDR3.                                           CM000095
00862   050100 OOR1.                                                      CM000095
00863   050110      IF  RR7C = '0' OR '1' OR '2' OR '3' OR '4' OR '5' OR '6'   CM000095
00864   050120          OR '7' OR '8' OR '9' GO TO DDR2.                  CM000095
00865   050130 DDR3.                                                      CM000095
00866   050140      IF DR7 = 'IPC' MOVE 'IN PLACE CALS' TO OD16 (J, K)    CM000095
00867   050150          GO TO DDR9.                                       CM000095
00868   050160      IF OR7 = 'SPC' MOVE 'SPECIAL CALS' TO DD16 (J, K)     CM000095
00869   050170          GO TO DDR9.                                       CM000095
00870   050180      IF RR7B = 'R' AND RR7C = 'N' GO TO DDR4.              CM000095
00871   050190      DISPLAY '5019' DR7  GO TO RD-HK.                      CM000095
00872   050200 DOR4.                                                      CM000095
00873   050210      OPEN INPUT CFILE.                                     CM000095
00874   050220 DDR5.                                                      CM000095
00875   050230      READ CFILE AT END GO TO DDCEND.                       CM000095
00876   050240      IF C9 NOT = '0' GO TO DDR5.
00877   050250      IF HPAR NOT = C5 GO TO ODR5.                          CM000095
00878   051010      IF  RR7A = '+'                                        CM000095
00879   051020          MOVE '26' TO DO5 (J, K)                           CM000095
00880   051030          MOVE '27' TO DO7 (J, K)                           CM000095
00881   051040          MOVE '28' TO DD9 (J, K)                           CM000095
00882   051050          MOVE '29' TO 0011 (J, K)                          CM000095
00883   051060          MOVE '30' TO DD13 (J, K)                          CM000095
00884   051070          GO TO DOR6.                                       CM000095
00885   051080      IF  RR7A = '-'                                        CM000095
00886   051090          MOVE '26' TO DO5 (J, K)                           CM000095
00887   051100          MOVE '25' TO DD7 (J, K)                           CM000095
00888   051110          MOVE '24' TO OD9 (J, K)                           CM000095
00889   051120          MOVE '23' TO DD11 (J, K)                          CM000095
00890   051130          MOVE '22' TO DO13 (J, K)                          CM000095
00891   051140          MOVE 1 TO NEG-SW                                  CM000095
00892   051150          GO TO DOR6.                                       CM000095
00893   051160      DISPLAY '5116' DR7  GO TO DDCEND.                     CM000095
00894   051170 DDR6.                                                      CM000095
00895   051180      IF C10 = SPACE GO TO DDR7.                            CM000095
00896   051190      MOVE C10 TO DD6 (J, K)                                CM000095
00897   051200      READ CFILE AT END GO TO DDCEND.                       CM000095
00898   051210      MOVE C10 TO DD8 (J, K)                                CM000095
00899   051220      READ CFILE AT END GO TO ODCENO.                       CM000095
00900   051230      MOVE C10 TO DD10 (J, K)                               CM000095
00901   051240      READ CFILE AT ENO GO TO DOCEND.                       CM000095
00902   051250      MOVE C10 TO OD12 (J, K)                               CM000095
00903   052010      READ CFILE AT END GO TO DDCEND.                       CM000095
00904   052020      MOVE C10 TO 0014 (J, K)                               CM000095
00905   052030      GO TO DDR8.                                           CM000095
00906   052040 DDR7.                                                      CM000095
00907   052050      IF C11 = SPACE DISPLAY '5205' C7 GO TO DDCEND.        CM000095
00908   052060      MOVE C11 TO DO6 (J, K).                               CM000095
00909   052070      READ CFILE AT END GO TO DDCEND.                       CM000095
```

17

```
052080      MOVE C11 TO DD8 (J, K).                                    CM000095
052090      READ CFILE AT END GO TO DDCEND.                            CM000095
052100      MOVE C11 TO DD10 (J, K).                                   CM000095
052110      READ CFILE AT END GO TO DDCEND.                            CM000095
052120      MOVE C11 TO DD12 (J, K).                                   CM000095
052130      READ CFILE AT END GO TO DDCEND.                            CM000095
052140      MOVE C11 TO DD14 (J, K).                                   CM000095
052150 DDR8.                                                           CM000095
052160      MOVE C11B TO DD4 (J, K).                                   CM000095
053110      CLOSE CFILE.                                               CM000095
**052170 DDR9.                                                         CM000095
052180      IF NEG-SW = 1  MOVE 0 TO NEG-SW                            CM000095
052190          MOVE '-' TO DDSN (J, K).                               CM000095
053010      IF DR6 = 'CP' MOVE 'CELL PRESS' TO DD15 (J, K) GO TO DDRX. CM000095
053020      IF DR6 = 'BA' MOVE 'BAROMETER ' TO DD15 (J, K) GO TO DDRX. CM000095
053030      IF DR6 = 'VR' MOVE 'VAC. REF. ' TO DD15 (J, K) GO TO DDRX. CM000095
053040      IF DR6 = 'RT' MOVE 'RTT       ' TO DD15 (J, K) GO TO DDRX. CM000095
053050      IF DR6 = 'CA' MOVE 'CA-150D-F ' TO DD15 (J, K) GO TO DDRX. CM000095
053060      IF DR6 = 'CC' MOVE 'CC-150D-F ' TO DD15 (J, K) GO TO DDRX. CM000095
053070      IF DR6 = 'IC' MOVE 'IC-150D-F ' TO DD15 (J, K) GO TO DDRX. CM000095
053080      IF DR6 = 'EV' MOVE 'EVENT     ' TO DD15 (J, K).            CM000095
053090 DDRX.                                                           CM000095
053100      MOVE HPAR TO DD3 (J, K)                                    CM000095
053120      GO TO RD-HK.                                               CM000095
053130 DDCEND.                                                         CM000095
053140      DISPLAY '5314'                                             CM000095
053150      CLOSE CFILE                                                CM000095
053160      GO TO RD-HK.                                               CM000095
054010 DDR2.                                                           CM000095
054020      IF RDR7B = 08 GO TO DDR2A.                                 CM000095
054030      IF RDR7B = 16 GO TO DDR2B.                                 CM000095
054040      IF RDR7B = 24 GO TO DDR2C.                                 CM000095
054050      IF RDR7B = 32 GO TO DDR2D.                                 CM000095
054060      IF RDR7B = 40 GO TO DDR2E.                                 CM000095
054070      IF RDR7B = 80 GO TO DDR2F.                                 CM000095
054080 DDR2Z.                                                          CM000095
054090      DISPLAY '5409' DR7  GO TO RD-HK.                           CM000095
054100 DDR2A.                                                          CM000095
054110      IF RR7A = '+'                                              CM000095
054120          MOVE ' 2' TO DD5 (J, K)                                CM000095
054130          MOVE '0 MV' TO DD6 (J, K)                              CM000095
054140          MOVE ' 3' TO DD7 (J, K)                                CM000095
054150          MOVE '8 MV' TO DD8 (J, K)                              CM000095
054160          GO TO DDR20.                                           CM000095
054170      IF RR7A = '-'                                              CM000095
054180          MOVE ' 2' TO DD5 (J, K)                                CM000095
054190          MOVE '0 MV' TO DD6 (J, K)                              CM000095
054200          MOVE ' 1' TO DD7 (J, K)                                CM000095
054210          MOVE '-8 MV' TO DD8 (J, K)                             CM000095
054220          GO TO DDR20.                                           CM000095
054230      GO TO DDR2Z.                                               CM000095
055010 DDR2B.                                                          CM000095
055020      IF RR7A = '+'                                              CM000095
055030          MOVE ' 5' TO DD5 (J, K)                                CM000095
055040          MOVE '0 MV' TO DD6 (J, K)                              CM000095
055050          MOVE ' 6' TO DD7 (J, K)                                CM000095
055060          MOVE ' 16 MV' TO DD8 (J, K)                            CM000095
```

18

```
00967   055070          GO TO DDR20.                                    CM000095
00968   055080      IF RR7A = '-'                                       CM000095
00969   055090          MOVE ' 5' TO DD5 (J, K)                         CM000095
00970   055100          MOVE '0 MV' TO DD6 (J, K)                       CM000095
00971   055110          MOVE ' 4' TO DD7 (J, K)                         CM000095
00972   055120          MOVE '-16 MV' TO DD8 (J, K)                     CM000095
00973   055130          GO TO DDR20.                                    CM000095
00974   055140      GO TO DDR2Z.                                        CM000095
00975   055150 DDR2C.                                                   CM000095
00976   055160      IF RR7A = '+'                                       CM000095
00977   055170          MOVE ' 8' TO DD5 (J, K)                         CM000095
00978   055180          MOVE '0 MV' TO DD6 (J, K)                       CM000095
00979   055190          MOVE ' 9' TO DD7 (J, K)                         CM000095
00980   055200          MOVE '24 MV' TO DD8 (J, K)                      CM000095
00981   055210          GO TO DDR20.                                    CM000095
00982   055220      IF RR7A = '-'                                       CM000095
00983   055230          MOVE ' 8' TO DD5 (J, K)                         CM000095
00984   055240          MOVE '0 MV' TO DD6 (J, K)                       CM000095
00985   055250          MOVE ' 7' TO DD7 (J, K)                         CM000095
00986   056010          MOVE '-24 MV' TO DD8 (J, K)                     CM000095
00987   056020          GO TO DDR20.                                    CM000095
00988   056030      GO TO DDR2Z.                                        CM000095
00989   056040 DDR2D.                                                   CM000095
00990   056050      IF RR7A = '+'                                       CM000095
00991   056060          MOVE '11' TO DD5 (J, K)                         CM000095
00992   056070          MOVE '0 MV'    TO DD6 (J, K)
00993   056080          MOVE '12' TO DD7 (J, K)                         CM000095
00994   056090          MOVE '32 MV' TO DD8 (J, K)                      CM000095
00995   056100          GO TO DDR20.                                    CM000095
00996   056110      IF RR7A = '-'                                       CM000095
00997   056120          MOVE '11' TO DD5 (J, K)                         CM000095
00998   056130          MOVE '0 MV' TO DD6 (J, K)                       CM000095
00999   056140          MOVE '10' TO DD7 (J, K)                         CM000095
01000   056150          MOVE '-32 MV' TO DD8 (J, K)                     CM000095
01001   056160          GO TO DDR20.                                    CM000095
01002   056170      GO TO DDR2Z.                                        CM000095
01003   056180 DDR2E.                                                   CM000095
01004   056190      IF RR7A = '+'                                       CM000095
01005   056200          MOVE '14' TO DD5 (J, K)                         CM000095
01006   056210          MOVE '0 MV' TO DD6 (J, K)                       CM000095
01007   056220          MOVE '15' TO DD7 (J, K)                         CM000095
01008   056230          MOVE '40 MV' TO DD8 (J, K)                      CM000095
01009   056240          GO TO DDR20.                                    CM000095
01010   057010      IF RR7A = '-'                                       CM000095
01011   057020          MOVE '14'  TO DD5 (J, K)
01012   057030          MOVE '0 MV' TO DD6 (J, K)                       CM000095
01013   057040          MOVE '13' TO DD5 (J, K)                         CM000095
01014   057050          MOVE '-40 MV' TO DD8 (J, K)                     CM000095
01015   057060          GO TO DDR20.                                    CM000095
01016   057070      GO TO DDR2Z.                                        CM000095
01017   057080 DDR2F.                                                   CM000095
01018   057090      IF RR7A = '+'                                       CM000095
01019   057100          MOVE '17' TO DD5 (J, K)                         CM000095
01020   057110          MOVE '0 MV' TO DD6 (J, K)                       CM000095
01021   057120          MOVE '18' TO DD7 (J, K)                         CM000095
01022   057130          MOVE '80 MV' TO DD8 (J, K)                      CM000095
01023   057140          GO TO DDR20.                                    CM000095
```

19

```
057150      IF RR7A = '-'                                                  CM000095
057160          MOVE 'I7' TO OO5 (J, K)                                    CM000095
057170          MOVE '0 MV' TO OO6 (J, K)                                  CM000095
057180          MOVE '16' TO DD7 (J, K)                                    CM000095
057190          MOVE '-80 MV' TO OD8 (J, K)                                CM000095
057200          GO TO DDR20.                                               CM000095
057210      GO TO DDR2Z.                                                   CM000095
057220 DDR20.                                                              CM000095
057230      MOVE 'MV CALS' TO DD16 (J, K).                                 CM000095
057240      GO TO DDR9.                                                    CM000095
058010 SR-ROUTE.                                                           CM000095
058020      IF HHR3 > 4 DISPLAY '5802' HROOUT GO TO RD-HK.                 CM000095
058030      IF RHR45 > 8 DISPLAY '5803' HRDOUT GO TO RD-HK.                CM000095
058040      MOVE HHR3 TO J.                                                CM000095
058050      MOVE RHR45 TO K.                                               CM000095
058060      IF DR8 = 'MVC' MOVE 'MV CALS' TO SR11 (J, K) GO TO SRR10.      CM000095
058070      IF DR8 = 'IPC' MOVE 'IN PLACE CALS' TO SR11 (J, K)             CM000095
058080          GO TO SRR10.                                               CM000095
058090      IF DR8 = 'SPC' MOVE 'SPECIAL CALS' TO SR11 (J, K)              CM000095
058100          GO TO SRR10.                                               CM000095
058110      IF RDR88 NOT = 'RN' DISPLAY '5811' HROOUT GO TO RD-HK.         CM000095
058120      OPEN INPUT CFILE.                                              CM000095
058130 SRR1.                                                               CM000095
058140      READ CFILE AT END GO TO SRREND.                                CM000095
058150      IF C9 NOT = '0' GO TO SRR1.
058160      IF HPAR NOT = C5 GO TO SRR1.                                   CM000095
058170      IF C10 = SPACE GO TO SRR2.                                     CM000095
058180      MOVE C10 TO SR5 (J, K)                                         CM000095
058190      READ CFILE AT END GO TO SRREND.                                CM000095
058200      MOVE C10 TO SR6 (J, K)                                         CM000095
058210      READ CFILE AT END GO TO SRREND.                                CM000095
058220      MOVE C10 TO SR7 (J, K)                                         CM000095
058230      READ CFILE AT END GO TO SRREND.                                CM000095
058240      MOVE C10 TO SR8 (J, K)                                         CM000095
058250      READ CFILE AT END GO TO SRREND.                                CM000095
059010      MOVE C10 TO SR9 (J, K)                                         CM000095
059020      GO TO SRR9.                                                    CM000095
059030 SRR2.                                                               CM000095
059040      IF C11 = SPACE DISPLAY '5904' C7 GO TO RD-HK.                  CM000095
059050      MOVE C11 TO SR5 (J, K).                                        CM000095
059060      READ CFILE AT END GO TO SRREND.                                CM000095
059070      MOVE C11 TO SR6 (J, K).                                        CM000095
059080      READ CFILE AT END GO TO SRREND.                                CM000095
059090      MOVE C11 TO SR7 (J, K)                                         CM000095
059100      READ CFILE AT END GO TO SRREND.                                CM000095
059110      MOVE C11 TO SR8 (J, K).                                        CM000095
059120      READ CFILE AT END GO TO SRREND.                                CM000095
059130      MOVE C11 TO SR9 (J, K).                                        CM000095
059140 SRR9.                                                               CM000095
059150      MOVE C11B TO SR4 (J, K)
060030      CLOSE CFILE.                                                   CM000095
**059160      IF RDR8A = '-' MOVE '-' TO SRSN (J, K).                       CM000095
059170 SRR10.                                                              CM000095
059180      IF DR6 = 'CP' MOVE 'CELL PRESS' TO SR10 (J, K) GO TO SRRSS.    CM000095
059190      IF DR6 = 'BA' MOVE 'BAROMETER ' TO SR10 (J, K) GO TO SRRSS.    CM000095
059200      IF DR6 = 'VR' MOVE 'VAC. REF. ' TO SR10 (J, K) GO TO SRRSS.    CM000095
059210      IF DR6 = 'RT' MOVE 'RTT       ' TO SR10 (J, K) GO TO SRRSS.    CM000095
```

20

```
01081   059220      IF OR6 = 'CA' MOVE 'CA-1500-F ' TO SR10 (J, K) GO TO SRRSS.  CM000095
01082   059230      IF OR6 = 'CC' MOVE 'CC-1500-F ' TO SR10 (J, K) GO TO SRRSS.  CM000095
01083   059240      IF OR6 = 'IC' MOVE 'IC-1500-F ' TO SR10 (J, K) GO TO SRRSS.  CM000095
01084   059250      IF OR6 = 'EV' MOVE 'EVENT     ' TO SR10 (J, K).              CM000095
01085   060010 SRRSS.                                                            CM000095
01086   060020      MOVE HPAR TO SR3 (J, K).                                     CM000095
01087   060040      GO TO RD-HK.                                                 CM000095
01088   060050 SRREND.                                                           CM000095
01089   060060      DISPLAY '6006'                                               CM000095
01090   060070      CLOSE CFILE.                                                 CM000095
01091   060080      GO TO RD-HK.                                                 CM000095
01092   062010 HK-END.                                                           CM000095
01093   062020      CLOSE HOOK.                                                  CM000095
01094   062030      PERFORM WR-SC VARYING J FROM 1 BY 1 UNTIL J > JJ.            CM000095
01095   062040      MOVE 28 TO JECT.  GO TO WR-MT.
01096   062050 WR-SC.                                                            CM000095
01097   062060      IF JECT = 50                                                 CM000095
01098   062061          WRITE LIT FROM SC-HD AFTER 0
01099   062070          WRITE LIT FROM HEADSMOS AFTER 2
01100   062080          MOVE 0 TO JECT.                                          CM000095
01101   062100      MOVE SC1 (J) TO LSC1.                                        CM000095
01102   062110      MOVE SC2 (J) TO LSC2.                                        CM000095
01103   062120      MOVE SC3 (J) TO LSC3.                                        CM000095
01104   062130      MOVE SC4 (J) TO LSC4.                                        CM000095
01105   062140      MOVE SC5 (J) TO LSC5.                                        CM000095
01106   062150      MOVE SC6 (J) TO LSC6.                                        CM000095
01107   062160      MOVE SC7 (J) TO LSC7.                                        CM000095
01108   062170      MOVE SC8 (J) TO LSC8.                                        CM000095
01109   062180      MOVE SC9 (J) TO LSC9.                                        CM000095
01110   062190      MOVE SC10 (J) TO LSC10.                                      CM000095
01111   062200      WRITE LIT FROM SCLIST AFTER 2.                               CM000095
01112   062210      ADD 2 TO JECT.                                               CM000095
01113   063010 WR-MT.  MOVE '   TNO CHAN ' TO SCMTD.                             CM000095
01114   063020      PERFORM WR-MT1 VARYING K FROM 1 BY 1 UNTIL K > 6
01115   063030          AFTER J FROM 1 BY 1 UNTIL J > 14.
01116   063040      GO TO WR-OS.                                                 CM000095
01117   063050 WR-MT1.                                                           CM000095
01118   063060      IF JECT = 28
01119   063061          PERFORM DO-HO
01120   063062          WRITE LIT FROM MT-HO AFTER 0
01121   063070          WRITE LIT FROM HEADSMOS AFTER 2
01122   063080          MOVE 0 TO JECT.                                          CM000095
01123   063120      MOVE MT3 (K, J) TO LMT3.                                     CM000095
01124   063130      MOVE MT4 (K, J) TO LMT4.                                     CM000095
01125   063140      MOVE MT5 (K, J) TO LMT5.                                     CM000095
01126   063150      MOVE MT6 (K, J) TO LMT6.                                     CM000095
01127   063160      MOVE MT7 (K, J) TO LMT7.                                     CM000095
01128   063170      MOVE MT8 (K, J) TO LMT8.                                     CM000095
01129   063180      MOVE MT9 (K, J) TO LMT9.                                     CM000095
01130   063190      MOVE MT10 (K, J) TO LMT10.                                   CM000095
01131   063200      MOVE MT11 (K, J) TO LMT11.                                   CM000095
01132   063210      IF K = 1 MOVE 'A' TO LMT1.                                   CM000095
01133   063220      IF K = 2 MOVE 'B' TO LMT1.                                   CM000095
01134   063230      IF K = 3 MOVE 'C' TO LMT1.                                   CM000095
01135   063240      IF K = 4 MOVE 'D' TO LMT1.                                   CM000095
01136   063250      IF K = 5 MOVE 'E' TO LMT1.                                   CM000095
01137   064010      IF K = 6 MOVE 'F' TO LMT1.                                   CM000095
```

21

```
01138   064020        MOVE J TO LMT2                                          CM000095
01139   064030        IF J = 12 MOVE 'GATED T.' TO LMT3.                      CM000095
01140   064040        IF J = 13 MOVE 'CONT. T.' TO LMT3.                      CM000095
01141   064050        IF J = 14 MOVE 'VOICE' TO LMT3.                         CM000095
01142   064060        ADD 2 TO JECT.                                          CM000095
01143   064070        WRITE LIT FROM MTLIST AFTER 2.                          CM000095
01144   065010 WR-OS.                                                         CM000095
01145   065011        MOVE OSF TO FLLX.
01146   065020        MOVE 36 TO JECT  MOVE '  OSNO CHAN'  TO SCMTO.
01147   065030        PERFORM WR-OS1 VARYING K FROM 1 BY 1 UNTIL K > 6
01148   065040          AFTER J FROM 1 BY 1 UNTIL J > 36.
01149   065050        GO TO WR-MC.                                            CM000095
01150   065060 WR-OS1.                                                        CM000095
01151   065070        IF JECT = 36
01152   065071            PERFORM DO-HD
01153   065072            WRITE LIT FROM MT-HD AFTER 0
01154   065080            WRITE LIT FROM HEADSMOS AFTER 2
01155   065081        MOVE '0' TO JKT
01156   065090            MOVE 0 TO JECT.                                     CM000095
01157   065100        IF K = 1 MOVE 'A' TO LOS1.                              CM000095
01158   065110        IF K = 2 MOVE 'B' TO LOS1.                              CM000095
01159   065120        IF K = 3 MOVE 'C' TO LOS1.                              CM000095
01160   065130        IF K = 4 MOVE 'D' TO LOS1.                              CM000095
01161   065140        IF K = 5 MOVE 'E' TO LOS1.                              CM000095
01162   065150        IF K = 6 MOVE 'F' TO LOS1.                              CM000095
01163   065160        MOVE J TO LOS2.                                         CM000095
01164   065170        MOVE OS3 (K, J) TO LOS3.                                CM000095
01165   065180        IF J = 35 MOVE '1 HZ ' TO LOS3.
01166   065190        IF J = 36 MOVE '100 HZ ' TO LOS3.
01167   065200        MOVE OS4 (K, J) TO LOS4.                                CM000095
01168   065210        MOVE OS5 (K, J) TO LOS5.                                CM000095
01169   065220        MOVE OS6 (K, J) TO LOS6.                                CM000095
01170   065230        MOVE OS7 (K, J) TO LOS7.                                CM000095
01171   065240        MOVE OS8 (K, J) TO LOS8.                                CM000095
01172   065250        MOVE OS9 (K, J) TO LOS9.                                CM000095
01173   066010        MOVE OS10 (K, J) TO LOS10.                              CM000095
01174   066020        MOVE OS11 (K, J) TO LOS11.                              CM000095
01175   066030        ADD 1 TO JECT.
01176   066040        WRITE LIT FROM OSLIST AFTER JKT  MOVE ' ' TO JKT.
01177   066060 WR-MC.                                                         CM000095
01178   066070        MOVE 50 TO JECT.                                        CM000095
01179   066080        MOVE 0 TO JJ.                                           CM000095
01180   066081        IF MSW1 = 1
01181   066090                MOVE 1 TO J   PERFORM WRMC1 VARYING K FROM 1 BY 1  CM000095
01182   066100            UNTIL K > 100   GO TO WR-MC2.                       CM000095
01183   066110        IF MSW3 = 1 GO TO WR-MC3.                               CM000095
01184   066120        GO TO WR-MC4.                                           CM000095
01185   066130 WR-MC2.                                                        CM000095
01186   066140        IF MSW3 = 0 GO TO WR-MC4.                               CM000095
01187   066150        IF MSW2 = 0 GO TO WR-MC4.                               CM000095
01188   066160        MOVE 2 TO J.                                            CM000095
01189   066170        PERFORM WRMC1 VARYING K FROM 1 BY 1 UNTIL K > 100.      CM000095
01190   066180 WR-MC3.                                                        CM000095
01191   066190        MOVE 3 TO J.                                            CM000095
01192   066200        PERFORM WRMC1 VARYING K FROM 1 BY 1 UNTIL K > 100.      CM000095
01193   066210 WR-MC4.                                                        CM000095
01194   066220        IF MSW2 = 1  MOVE 2 TO J                                CM000095
```

22

```
066230          PERFORM WRMC1 VARYING K FROM 1 BY 1 UNTIL K > 100.          CM000095
066240      MOVE 24 TO JECT.
068050      GO TO WR-SR.
**067010 WRMC1.                                                             CM000095
067020      ADD 1 TO JJ.                                                    CM000095
067030      MOVE JJ TO LMC1.                                                CM000095
067040      MOVE MC2 (J, K) TO LMC2.                                        CM000095
067050      MOVE MC3 (J, K) TO LMC3.                                        CM000095
067060      MOVE MC4 (J, K) TO LMC4.                                        CM000095
067070      MOVE MC5 (J, K) TO LMC5.                                        CM000095
067080      MOVE MC6 (J, K) TO LMC6.                                        CM000095
067090      MOVE MC7 (J, K) TO LMC7.                                        CM000095
067100      MOVE MC8 (J, K) TO LMC8.                                        CM000095
067110      MOVE MC9 (J, K) TO LMC9.                                        CM000095
067120      MOVE MC10 (J, K) TO LMC10.                                      CM000095
067130      MOVE MC11 (J, K) TO LMC11.                                      CM000095
067140      MOVE MC12 (J, K) TO LMC12.                                      CM000095
067150      MOVE MC13 (J, K) TO LMC13.                                      CM000095
067160      MOVE MC14 (J, K) TO LMC14.                                      CM000095
067170      MOVE MC15 (J, K) TO LMC15.                                      CM000095
067180      IF JECT = 50                                                    CM000095
067181          WRITE LIT FROM MC-HD AFTER 0
067190          WRITE LIT FROM HEADMCDD AFTER 2
067200          MOVE 0 TO JECT.                                             CM000095
067210      ADD 2 TO JECT.                                                  CM000095
067220      WRITE LIT FROM MCLIST AFTER 2.                                  CM000095
071010 WR-SR.                                                               CM000095
071011      MOVE SRF TO FIXR.
071020      MOVE '    REC CHAN' TO SCMTO.
071040      PERFORM WRSR1 VARYING K FROM 1 BY 1 UNTIL K > 4
071050          AFTER J FROM 1 BY 1 UNTIL J > 8.
071060      GO TO ASCEND.                                                   CM000095
071080 WRSR1.                                                               CM000095
071090      IF K = 1 MOVE 'A' TO LSR1.
071092      IF K = 2 MOVE 'B' TO LSR1.
071093      IF K = 3 MOVE 'C' TO LSR1.
071094      IF K = 4 MOVE 'D' TO LSR1.
071100      MOVE J TO LSR2.                                                 CM000095
071110      MOVE SR3 (K, J) TO LSR3.                                        CM000095
071120      MOVE SR4 (K, J) TO LSR4.                                        CM000095
071130      MOVE SR5 (K, J) TO LSR5.                                        CM000095
071140      MOVE SR6 (K, J) TO LSR6.                                        CM000095
071150      MOVE SR7 (K, J) TO LSR7.                                        CM000095
071160      MOVE SR8 (K, J) TO LSR8.                                        CM000095
071170      MOVE SR9 (K, J) TO LSR9.                                        CM000095
071180      MOVE SR10 (K, J) TO LSR10.                                      CM000095
071190      MOVE SR11 (K, J) TO LSR11.                                      CM000095
071200      IF SRSN (K, J) = '-' MOVE ' -' TO FILLERA FILLERB FILLERC       CM000095
071210          FILLERD FILLERE   ELSE   MOVE SPACE TO FILLERA FILLERB      CM000095
071220          FILLERC FILLERD FILLERE.                                    CM000095
071230      IF JECT = 24                                                    CM000095
071231          WRITE LIT FROM MC-HD AFTER 0
071240          WRITE LIT FROM HEADSMDS AFTER 2
071250          MOVE 0 TO JECT.                                             CM000095
072010      ADD 1 TO JECT.                                                  CM000095
072020      WRITE LIT FROM SRLIST AFTER 2.                                  CM000095
072030 ASCEND.                                                              CM000095
```

23

```
01252 **069020      MOVE 1 TO J.  MOVE '      CHAN  ' TO MCOD. MOVE 25 TO JECT.  CM000095
01253   069030      PERFORM WROD1 VARYING K FROM 1 BY 1 UNTIL K > 100.           CM000095
01254   069070      GO TO QUIT.
01255   069100 WROD1.                                                            CM000095
01256   069110      MOVE K TO L002.
01257   096120      MOVE 0 TO LD01.
01258 **069150      MOVE OD3 (J, K) TO LDD3.                                     CM000095
01259   069160      MOVE OD4 (J, K) TO LD04.                                     CM000095
01260   069170      MOVE OD5 (J, K) TO L005.                                     CM000095
01261   069180      MOVE 006 (J, K) TO LD06.                                     CM000095
01262   069190      MOVE DD7 (J, K) TO LDD7.                                     CM000095
01263   069200      MOVE 008 (J, K) TO LDD8.                                     CM000095
01264   069210      MOVE DD9 (J, K) TO L009.                                     CM000095
01265   069220      MOVE 0010 (J, K) TO L0010                                    CM000095
01266   069230      MOVE DD11 (J, K) TO LDD11                                    CM000095
01267   069240      MOVE DD12 (J, K) TO LDD12                                    CM000095
01268   069250      MOVE DD13 (J, K) TO LDD13                                    CM000095
01269   070010      MOVE D014 (J, K) TO L0014.                                   CM000095
01270   070020      MOVE DD15 (J, K) TO LDD15.                                   CM000095
01271   070030      MOVE OD16 (J, K) TO LOD16.                                   CM000095
01272   070040      IF DDSN (J, K) = '-'  MOVE '-' TO FILLER1 FILLER2 FILLER3    CM000095
01273   070050          FILLER4 FILLER5  ELSE  MOVE SPACE TO FILLER1 FILLER2     CM000095
01274   070060          FILLER3 FILLER4 FILLER5.                                 CM000095
01275   070070      IF JECT = 25                                                 CM000095
01276   070071          WRITE LIT FROM DDAS-HD AFTER 0
01277   070080          WRITE LIT FROM HEAOMCOO AFTER 2
01278   070090          MOVE 0 TO JECT.                                          CM000095
01279   070100      AOO 1 TO JECT.                                               CM000095
01280   070110      WRITE LIT FROM DDLIST AFTER 2.                               CM000095
01281   070111 QUIT.
01282   072040      CLOSE LIST.                                                  CM000095
01283   072060      STOP RUN.                                                    CM000095
01284   073010 SPACE-TB.                                                         CM000095
01285   073110      MOVE 1 TO J.
01286   073120      PERFORM SPC-OO VARYING K FROM 1 BY 1 UNTIL K > 100.
01287 **073020      PERFORM SPC-SC VARYING J FROM 1 BY 1 UNTIL J = 51.           CM000095
01288   073030      PERFORM SPC-MT VARYING K FROM 1 BY 1 UNTIL K > 14 AFTER      CM000095
01289   073040          J FROM 1 BY 1 UNTIL J > 6.                               CM000095
01290   073050      PERFORM SPC-OS VARYING K FROM 1 BY 1 UNTIL K > 36 AFTER      CM000095
01291   073060          J FROM 1 BY 1 UNTIL J > 6.                               CM000095
01292   073070      PERFORM SPC-MC VARYING K FROM 1 BY 1 UNTIL K > 100 AFTER     CM000095
01293   073080          J FROM 1 BY 1 UNTIL J > 3.                               CM000095
01294   073150      PERFORM SPC-SR VARYING K FROM 1 BY 1 UNTIL K > 8             CM000095
01295   073160          AFTER J FROM 1 BY 1 UNTIL J = 5.                         CM000095
01296   074010 SPC-SC.                                                           CM000095
01297   074020      MOVE SPACE TO SC1 (J), SC2 (J), SC3 (J), SC4 (J), SC5 (J),   CM000095
01298   074030          SC6 (J), SC7 (J) SC8 (J) SC9 (J) SC10 (J).               CM000095
01299   074040 SPC-MT.                                                           CM000095
01300   074050      MOVE SPACE TO                          MT3 (J, K), MT4 (J, K),CM000095
01301   074060          MT5 (J, K), MT6 (J, K), MT7 (J, K), MT8 (J, K),          CM000095
01302   074070          MT9 (J, K), MT10 (J, K), MT11 (J, K).                    CM000095
01303   074080 SPC-OS.                                                           CM000095
01304   074090      MOVE SPACE TO OS1 (J, K), OS2 (J, K), OS3 (J, K), OS4 (J, K),CM000095
01305   074100          OS5 (J, K), OS6 (J, K), OS7 (J, K), OS8 (J, K),          CM000095
01306   074110          OS9 (J, K), OS10 (J, K), OS11 (J, K).                    CM000095
01307   074120 SPC-MC.                                                           CM000095
01308   074130      MOVE SPACE TO MC1 (J, K), MC2 (J, K), MC3 (J, K),            CM000095
```

24

```
01309   074140          MC4 (J, K), MC5 (J, K), MC6 (J, K), MC7 (J, K)          CM000095
01310   074150          MC8 (J, K), MC9 (J, K), MC10 (J, K), MC11 (J, K),       CM000095
01311   074160          MC12 (J, K), MC13 (J, K), MC14 (J, K), MC15 (J, K),     CM000095
01312   074170          MC16 (J, K).                                            CM000095
01313   074200 SPC-00.                                                          CM000095
01314   074210      MOVE SPACE TO OD1 (J, K), OD2 (J, K), OD3 (J, K) OD4 (J, K) CM000095
01315   074220          OD5 (J, K) DD6 (J, K) DD7 (J, K) DD8 (J, K)             CM000095
01316   074230          DD9 (J, K) 0010 (J, K) OD11 (J, K) OD12 (J, K)          CM000095
01317   074240          D013 (J, K) 0014 (J, K) DD15 (J, K) DD16 (J, K)         CM000095
01318   074250          00SN (J, K).                                            CM000095
01319   075030 SPC-SR.                                                          CM000095
01320   075040      MOVE SPACE TO SR1 (J, K), SR2 (J, K), SR3 (J, K), SR4 (J, K),CM000095
01321   075050          SR5 (J, K), SR6 (J, K), SR7 (J, K), SR8 (J, K)          CM000095
01322   075060          SR9 (J, K), SR10 (J, K) SR11 (J, K), SRSN (J, K).       CM000095
01323   076010 DP-BF.
01324   076020      OPEN INPUT  BFILE.  MOVE 0 TO J.                            CM000095
01325   076030 RD-BF.                                                           CM000095
01326   076040      READ  BFILE AT END GO TO BEND.                              CM000095
01327   076050      IF B3A NOT = 'SC' GO TO RD-BF.                              CM000095
01328   076060      ADD 1 TO J.                                                 CM000095
01329   076070      IF J > 50  DISPLAY 'SC-TABLE TOO SMALL'  B3A B3B GO TO BEND.CM000095
01330   076080      MOVE B3B TO SC1 (J).                                        CM000095
01331   076090      GO TO RD-BF.                                                CM000095
01332   076100 BEND.                                                            CM000095
01333   076110      MOVE J TO JJ.                                               CM000095
01334   076120      CLOSE BFILE.                                                CM000095
01335   077010 DO-U.                                                            CM000095
01336   077020      MOVE 0 TO J.                                                CM000095
01337   077030      MOVE 1 TO K.
01338   077040 DO-J.                                                            CM000095
01339   077050      MOVE J TO MC16 (1, K)                                       CM000095
01340   077060      ADD 1 TO J   ADD 1 TO K.                                    CM000095
01341   077070      IF J = 100 GO TO U-TO.
01342   077080      GO TO DO-J.                                                 CM000095
01343   077090 U-TO.                                                            CM000095
01344   077100      MOVE 400 TO J                                               CM000095
01345   077110      MOVE 1 TO K.                                                CM000095
01346   077120 TO-TWO.                                                          CM000095
01347   077130      MOVE J TO MC16 (2, K).                                      CM000095
01348   077140      ADD 1 TO J                                                  CM000095
01349   077150      ADD 1 TO K                                                  CM000095
01350   077160      IF J = 500 GO TO DO-MOR.
01351   077170      GO TO TO-TWO.                                               CM000095
01352   077180 DO-MOR.                                                          CM000095
01353   077190      MOVE 100 TO J.                                              CM000095
01354   077200      MOVE 1 TO K.                                                CM000095
01355   077210 B4-U.                                                            CM000095
01356   077220      MOVE J TO MC16 (3, K)                                       CM000095
01357   077230      ADD 1 TO J.                                                 CM000095
01358   077240      ADD 1 TO K.                                                 CM000095
01359   077250      IF J = 200 GO TO ALL-DO.
01360   078010      GO TO B4-U.                                                 CM000095
01361   078020 ALL-DO.                                                          CM000095
01362   078030      EXIT.                                                       CM000095
01363   079010 DO-HO.
01364   079020          IF K = 1 MOVE 'A' TO FLP.
01365   079030          IF K = 2 MOVE 'B' TO FLP.
```

25

```
01366   079040          IF K = 3 MOVE 'C' TO FLP.
01367   079050          IF K = 4 MOVE 'D' TO FLP.
01368   079060          IF K = 5 MOVE 'E' TO FLP.
01369   079070          IF K = 6 MOVE 'F' TO FLP.
```

1

```
00001   001010 IDENTIFICATION DIVISION.                                          CM000048
00002   001020 PROGRAM-ID. 'CM000048'.                                           CM000048
00003   001030 AUTHOR.  JACK ROSE.                                               CM000048
00004   001040 INSTALLATION.   ARO INC  TULLAHOMA TENN.                          CM000048
00005   001050 DATE-WRITTEN.   SEPTEMBER  1967.                                  CM000048
00006   001060 DATE-COMPILED. DEC 14,1968                                        CM000048
00007   001070 SECURITY.                                                         CM000048
00008   001080 REMARKS.     THIS PROGRAM CREATES A GILMORE TRANSDUCER            CM000048
00009   001090              FILE TO BE USED BY RTF AND LRF INSTRUMENT BOOKS.     CM000048
00010   001110 ENVIRONMENT DIVISION.                                             CM000048
00011   001120 CONFIGURATION SECTION.                                            CM000048
00012   001130 SOURCE-COMPUTER. IBM-360 H50.                                     CM000048
00013   001140 OBJECT-COMPUTER. IBM-360 H50.                                     CM000048
00014   001150 INPUT-OUTPUT SECTION.                                             CM000048
00015   001160 FILE-CONTROL.                                                     CM000048
00016   001170     SELECT  GIL-IN  ASSIGN  'G001' UTILITY.                       CM000048
00017   001180     SELECT  GIL-OT  ASSIGN  'G002' UTILITY.                       CM000048
00018   001190 DATA DIVISION.                                                    CM000048
00019   001200 FILE SECTION.                                                     CM000048
00020   001210 FD  GIL-IN    RECORDING F  BLOCK 10 RECORDS  RECORD 133           CM000048
00021   001220                LABEL RECORDS STANDARD  DATA RECORD GIN.           CM000048
00022   001230 01  GIN.                                                          CM000048
00023   001240     02  GINN     PICTURE X    OCCURS  133.                        CM000048
00024   002010 FD  GIL-OT       RECORDING F  BLOCK 1 RECORDS  RECORD 747         CM000048
00025   002020                LABEL RECORDS STANDARD DATA RECORDS ARE GOT NEWG.  CM000048
00026   002030 01  GOT.                                                          CM000048
00027   002040     02  GPURSPEC     PICTURE  X(10).                              CM000048
00028   002050     02  GINS-NO      PICTURE  X(16).                              CM000048
00029   002060     02  GDAT-REC     PICTURE  9(6).                               CM000048
00030   002070     02  GMAN         PICTURE  X(12).                              CM000048
00031   002080     02  GMATE        PICTURE  X(20).                              CM000048
00032   002090     02  GRANGE       PICTURE  X(5).                               CM000048
00033   002100     02  GRANGE-U     PICTURE  X(12).                              CM000048
00034   002110     02  GPOS-ICON    PICTURE  XX.                                 CM000048
00035   002120     02  GMODEL       PICTURE  X(12).                              CM000048
00036   002130     02  GNEG-ICON    PICTURE  XX.                                 CM000048
00037   002140     02  GSERIAL      PICTURE  X(10).                              CM000048
00038   002150     02  GPOS-OCON    PICTURE  XX.                                 CM000048
00039   002160     02  GFACILITY    PICTURE  XXXX.                               CM000048
00040   002170     02  GNEG-OCON    PICTURE  XX.                                 CM000048
00041   002180     02  GPURCHASED   PICTURE  X(10).                              CM000048
00042   002190     02  GSHIELD      PICTURE  XX.                                 CM000048
00043   002200     02  GCAL-RUN     PICTURE  XXX.                                CM000048
00044   002210     02  GDAT-CAL     PICTURE  9(6).                               CM000048
00045   002220     02  GEXCITATION  PICTURE  S99V99.                             CM000048
00046   002230     02  GTEMP        PICTURE  S9(6).                              CM000048
00047   002240     02  GBAROMETRIC  PICTURE  S99V99.                             CM000048
00048   002250     02  GINPUTRES    PICTURE  S9(5)V9.                            CM000048
00049   003010     02  GOUTPUTRES   PICTURE  S9(5)V9.                            CM000048
00050   003020     02  GINSUL-RES   PICTURE  S9(5)V9.                            CM000048
00051   003030     02  GTERM-LINEARITY.                                          CM000048
00052   003040         03  MVOA     PICTURE S9(7)V999.                           CM000048
00053   003050         03  MVOB     PICTURE S9(8)V99.                            CM000048
00054   003060         03  MV25A    PICTURE S9(7)V999.                           CM000048
```

2

```
00055  003070        03  MV25B   PICTURE S9(8)V99.                    CM000048
00056  003080        03  MV50A   PICTURE S9(7)V999.                   CM000048
00057  003090        03  MV50B   PICTURE S9(8)V99.                    CM000048
00058  003100        03  MV75A   PICTURE S9(7)V999.                   CM000048
00059  003110        03  MV75B   PICTURE S9(8)V99.                    CM000048
00060  003120        03  MV100A  PICTURE S9(7)V999.                   CM000048
00061  003130        03  MV100B  PICTURE S9(8)V99.                    CM000048
00062  003140        03  MV75AA  PICTURE S9(7)V999.                   CM000048
00063  003150        03  MV75BB  PICTURE S9(8)V99.                    CM000048
00064  003160        03  MV50AA  PICTURE S9(7)V999.                   CM000048
00065  003170        03  MV50BB  PICTURE S9(8)V99.                    CM000048
00066  003180        03  MV25AA  PICTURE S9(7)V999.                   CM000048
00067  003190        03  MV25BB  PICTURE S9(8)V99.                    CM000048
00068  003200        03  MV0AA   PICTURE S9(7)V999.                   CM000048
00069  003210        03  MV0BB   PICTURE S9(8)V99.                    CM000048
00070  004010    02  GREPEATABILITY.                                  CM000048
00071  004020        03  PSI1    PICTURE  S9(4)V99.                   CM000048
00072  004030        03  PSI1U   PICTURE  X.                          CM000048
00073  004040        03  PSIMV1  PICTURE  S999V999.                   CM000048
00074  004050        03  PSI2    PICTURE  S9(4)V99.                   CM000048
00075  004060        03  PSI2U   PICTURE  X.                          CM000048
00076  004070        03  PSIMV2  PICTURE  S999V999.                   CM000048
00077  004080        03  PSI3    PICTURE  S9(4)V99.                   CM000048
00078  004090        03  PSI3U   PICTURE  X.                          CM000048
00079  004100        03  PSIMV3  PICTURE  S999V999.                   CM000048
00080  004110        03  PSI4    PICTURE  S9999V99.                   CM000048
00081  004120        03  PSI4U   PICTURE  X.                          CM000048
00082  004130        03  PSIMV4  PICTURE  S999V999.                   CM000048
00083  004140        03  PSI5    PICTURE  S9999V99.                   CM000048
00084  004150        03  PSI5U   PICTURE  X.                          CM000048
00085  004160        03  PSIMV5  PICTURE  S999V999.                   CM000048
00086  004170        03  PSI6    PICTURE  S9999V99.                   CM000048
00087  004180        03  PSI6U   PICTURE  X.                          CM000048
00088  004190        03  PSIMV6  PICTURE  S999V999.                   CM000048
00089  004200        03  PSI7    PICTURE  S9999V99.                   CM000048
00090  004210        03  PSI7U   PICTURE  X.                          CM000048
00091  004220        03  PSIMV7  PICTURE  S999V999.                   CM000048
00092  005010    02  GRCAL-TYP   PICTURE  XXX.                        CM000048
00093  005020    02  GRCAL-SN    PICTURE  XXX.                        CM000048
00094  005030    02  GOUT-AT     PICTURE S999V99.                     CM000048
00095  005040    02  GOUTPSIA    PICTURE S999V999.                    CM000048
00096  005050    02  GR-CALAC.                                        CM000048
00097  005060        03  CALACR1      PICTURE  XX.                    CM000048
00098  005070        03  CALACR2      PICTURE  XX.                    CM000048
00099  005080    02  GUNBALANCE  PICTURE S999V999.                    CM000048
00100  005090    02  GUNBMVO     PICTURE X.                           CM000048
00101  005100    02  GRCAL-TKN   PICTURE S9999V99.                    CM000048
00102  005110    02  GTKN-PSIA   PICTURE X.                           CM000048
00103  005120    02  GFS-SEN     PICTURE S999V999.                    CM000048
00104  005130    02  GMAX-N-LIN  PICTURE S999V99.                     CM000048
00105  005140    02  GMAX-HYST   PICTURE S9999V99.                    CM000048
00106  005150    02  GMAX-N-REPT PICTURE S99V99.                      CM000048
00107  005151    02  GCORR-P     PICTURE X.                           CM000048
00108  005160    02  G-RNO.                                           CM000048
00109  005170        03  G-RNO1  PICTURE S99999V9.                    CM000048
00110  005180        03  G-RNO2  PICTURE S9999999V999.                CM000048
00111  005190        03  G-RNO3  PICTURE S99999V99.                   CM000048
```

3

```
00112   005200      02  G-RN1.                                                  CM000048
00113   005210          03  G-RN11  PICTURE S9(5)V999.                          CM000048
00114   005220          03  G-RN12  PICTURE S9(5)V999.                          CM000048
00115   005230          03  G-RN13  PICTURE S9(5)V99.                           CM000048
00116   005240          03  G-RN14  PICTURE S9(6)V999.                          CM000048
00117   006010      02  G-RN2.                                                  CM000048
00118   006020          03  G-RN21  PICTURE  S9(5)V999.                         CM000048
00119   006030          03  G-RN22  PICTURE  S9(5)V999.                         CM000048
00120   006040          03  G-RN23  PICTURE  S9(5)V99.                          CM000048
00121   006050          03  G-RN24  PICTURE  S9(6)V999.                         CM000048
00122   006060      02  G-RN3.                                                  CM000048
00123   006070          03  G-RN31  PICTURE  S9(5)V999.                         CM000048
00124   006080          03  G-RN32  PICTURE  S9(5)V999.                         CM000048
00125   006090          03  G-RN33  PICTURE  S9(5)V99.                          CM000048
00126   006100          03  G-RN34  PICTURE  S9(6)V999.                         CM000048
00127   006110      02  G-RN4.                                                  CM000048
00128   006120          03  G-RN41  PICTURE  S9(5)V999.                         CM000048
00129   006130          03  G-RN42  PICTURE  S9(5)V999.                         CM000048
00130   006140          03  G-RN43  PICTURE  S9(5)V99.                          CM000048
00131   006150          03  G-RN44  PICTURE  S9(6)V999.                         CM000048
00132   006160      02  G-RNOL.                                                 CM000048
00133   006170          03  G-RNL1  PICTURE  S9(5)V9.                           CM000048
00134   006180          03  G-RNL2  PICTURE  S9(7)V999.                         CM000048
00135   006190          03  G-RNL3  PICTURE  S9(5)V99.                          CM000048
00136   006200      02  GPS-DATE    PICTURE  9(6).                              CM000048
00137   006210      02  GOP-AT      PICTURE  S999V99.                           CM000048
00138   006220      02  GOP-PSIA    PICTURE  S999V999.                          CM000048
00139   006230      02  GOP-UNB     PICTURE  S999V999.                          CM000048
00140   006240      02  GOP-FSS     PICTURE  S999V999.                          CM000048
00141   006250      02  BMAX-N-LIN  PICTURE   S999V99.
00142   007010      02  BMAX-HYST       PICTURE  S9999V99.                      CM000048
00143   007020      02  BMAX-N-REPT     PICTURE  S99V99.                        CM000048
00144   007030      02  BCLEANFOR       PICTURE  X(20).                         CM000048
00145   007040      02  BCALIBAT1       PICTURE  9(6).                          CM000048
00146   007050      02  BCALIBAT2       PICTURE  9(6).                          CM000048
00147   007051      02  FILLERL  PICTURE  X.                                    CM000048
00148   007060 01   NEWG.                                                       CM000048
00149   007070      02  GIL      PICTURE  X  OCCURS  747.                       CM000048
00150   007090 WORKING-STORAGE SECTION.                                         CM000048
00151   007100 77   A   PICTURE   9999  VALUE 0.                                CM000048
00152   007110 77   B   PICTURE   9999  VALUE 0.                                CM000048
00153   007120 77   C   PICTURE   9999  VALUE 0.                                CM000048
00154   007130 77   D   PICTURE   9999  VALUE 0.                                CM000048
00155   007140 77   M-SW     PICTURE  9  VALUE 0.                                CM000048
00156   007150 77   N-SW     PICTURE  9  VALUE 0.                                CM000048
00157   008010 01   HOLD-GIL.                                                   CM000048
00158   008020      02  GIL-REC OCCURS 58.                                      CM000048
00159   008030          03  G       OCCURS 133  PICTURE  X.                     CM000048
00160   009010 PROCEDURE DIVISION.                                              CM000048
00161   009020      OPEN INPUT GIL-IN  OUTPUT GIL-OT.                           CM000048
00162   009021      MOVE SPACE TO FILLERL.                                      CM000048
00163   009030 FIRS.                                                            CM000048
00164   009040      MOVE 0 TO A                                                 CM000048
00165   009050      PERFORM READ-GILMORE 58 TIMES.                              CM000048
00166   009060      MOVE 6 TO A.  MOVE 70 TO 8. MOVE 1 TO C.                    CM000048
00167   009070      PERFORM MOVE-DATA 10 TIMES.                                 CM000048
00168   009080      ADD 1 TO A   MOVE 28 TO B.                                  CM000048
```

4

```
00169   009090      PERFORM MOVE-DATA 16 TIMES.                                  CM000048
00170   009100      MOVE 61 TO B.                                                CM000048
00171   009110      PERFORM MAKE-NUMERIC THRU MOVE-DATA 2 TIMES                  CM000048
00172   009120      MOVE 64 TO B.                                                CM000048
00173   009130      PERFORM MAKE-NUMERIC THRU MOVE-DATA 2 TIMES                  CM000048
00174   009140      MOVE 67 TO B.                                                CM000048
00175   009150      PERFORM MAKE-NUMERIC THRU MOVE-DATA 2 TIMES                  CM000048
00176   009160      ADD 1 TO A.                                                  CM000048
00177   009170      MOVE 23 TO B.                                                CM000048
00178   009180      PERFORM MOVE-DATA 12 TIMES.                                  CM000048
00179   009190      MOVE 64 TO B.                                                CM000048
00180   009200      PERFORM MOVE-DATA 20 TIMES.                                  CM000048
00181   009210      ADD 1 TO A.   MOVE 16 TO B.                                  CM000048
00182   009220      PERFORM MOVE-DATA 5 TIMES.                                   CM000048
00183   009230      MOVE 26 TO B.                                                CM000048
00184   009240      PERFORM MOVE-DATA 12 TIMES.                                  CM000048
00185   010010 Z.   MOVE 77  TO B.                                               CM000048
00186   010020      PERFORM MOVE-DATA. ADD 5 TO B. PERFORM MOVE-DATA.            CM000048
00187   010030 Y.   ADD 1 TO A.  MOVE 23 TO B.                                   CM000048
00188   010040      PERFORM MOVE-DATA 12 TIMES.                                  CM000048
00189   010060      PERFORM Z.                                                   CM000048
00190   010090      ADD 1 TO A                                                   CM000048
00191   010100      SUBTRACT 60 FROM B.                                          CM000048
00192   010110      PERFORM MOVE-DATA 10 TIMES.                                  CM000048
00193   010120      PERFORM Z.                                                   CM000048
00194   010130      ADD 1 TO A.  MOVE 34 TO B.                                   CM000048
00195   010140      PERFORM  MOVE-DATA 4 TIMES.                                  CM000048
00196   010150      PERFORM Z.                                                   CM000048
00197   010160      ADD 1 TO A.  MOVE 32 TO B.                                   CM000048
00198   010170      PERFORM MOVE-DATA 10 TIMES.                                  CM000048
00199   010180      PERFORM Z.                                                   CM000048
00200   010190      ADD 2 TO A.  MOVE 50 TO B.                                   CM000048
00201   010200      PERFORM MOVE-DATA 3 TIMES.                                   CM000048
00202   010210      ADD 1 TO A.  MOVE 42 TO B.                                   CM000048
00203   010220 NN.  PERFORM MAKE-NUMERIC THRU MOVE-DATA 2 TIMES  ADD 1 TO B.     CM000048
00204   010230      PERFORM MAKE-NUMERIC THRU MOVE-DATA 2 TIMES  ADD 1 TO B.     CM000048
00205   010240      PERFORM MAKE-NUMERIC THRU MOVE-DATA 2 TIMES.                 CM000048
00206   011010 OO.  MOVE 17 TO A. MOVE 21 TO B.                                  CM000048
00207   011020      PERFORM MAKE-NEG THRU MOVE-DATA 2 TIMES.                     CM000048
00208   011030      MOVE 24 TO B.                                                CM000048
00209   011040      PERFORM MAKE-NUMERIC THRU MOVE-DATA 2 TIMES.                 CM000048
00210   011050      IF M-SW = 1 SUBTRACT GEXCITATION FROM 0 GIVING GEXCITATION   CM000048
00211   011060      MOVE 0 TO M-SW. MOVE 45 TO B.                                CM000048
00212   011070      PERFORM MAKE-NEG THRU MOVE-DATA 6 TIMES.                     CM000048
00213   011080      IF M-SW = 1 SUBTRACT GTEMP FROM 0 GIVING GTEMP               CM000048
00214   011090      MOVE 0 TO M-SW. MOVE 74 TO B.                                CM000048
00215   011100      PERFORM MAKE-NEG THRU MOVE-DATA 2 TIMES.                     CM000048
00216   011110      ADD 1 TO B.                                                  CM000048
00217   011120      PERFORM MAKE-NUMERIC THRU MOVE-DATA 2 TIMES.                 CM000048
00218   011130      IF M-SW = 1   MOVE 0 TO M-SW                                 CM000048
00219   011140      SUBTRACT GBAROMETRIC FROM 0 GIVING GBAROMETRIC.              CM000048
00220   011150      MOVE 21 TO A.   MOVE 25 TO B.                                CM000048
00221   011160 W.   PERFORM MAKE-NEG THRU MOVE-DATA 5 TIMES.                     CM000048
00222   011170      ADD 1 TO B                                                   CM000048
00223   011180      PERFORM MAKE-NUMERIC THRU MOVE-DATA.                         CM000048
00224   011190 U.   IF M-SW = 1  MOVE 0 TO M-SW                                  CM000048
00225   011200      SUBTRACT GINPUTRES FROM 0 GIVING GINPUTRES.                  CM000048
```

5

```
00226  011210      MOVE 22 TO A    MOVE 26 TO B.                          CM000048
00227  011220      PERFORM W.                                             CM000048
00228  011230      IF M-SW = 1   MOVE 0 TO M-SW                           CM000048
00229  011240      SUBTRACT GOUTPUTRES FROM 0 GIVING GOUTPUTRES.          CM000048
00230  012010      ADD 1 TO A   MOVE 30 TO B.                             CM000048
00231  012020      PERFORM W.                                             CM000048
00232  012030      IF M-SW = 1   SUBTRACT 1 FROM M-SW GIVING M-SW         CM000048
00233  012040      MULTIPLY GINSUL-RES  BY -1 GIVING GINSUL-RES.          CM000048
00234  012050      MOVE 25 TO A.  MOVE 59 TO B.                           CM000048
00235  012060 V.   PERFORM MAKE-NEG THRU MOVE-DATA 7 TIMES.              CM000048
00236  012070      ADD 1 TO B.                                            CM000048
00237  012080      PERFORM MAKE-NUMERIC THRU MOVE-DATA 3 TIMES.           CM000048
00238  012090 S.   IF M-SW = 1  MOVE 0 TO M-SW                            CM000048
00239  012100      SUBTRACT MVOA FROM 0 GIVING MVOA.                      CM000048
00240  012110 T.   PERFORM MAKE-NEG THRU MOVE-DATA 8 TIMES.              CM000048
00241  012120      ADD 1 TO B.                                            CM000048
00242  012130      PERFORM MAKE-NUMERIC THRU MOVE-DATA 2 TIMES.           CM000048
00243  012140 R.   IF M-SW = 1   MOVE 0 TO M-SW                           CM000048
00244  012150      MULTIPLY MVOB BY -1 GIVING MVOB.                       CM000048
00245  012160      MOVE 26 TO A.  MOVE 59 TO B.                           CM000048
00246  012170      PERFORM V.                                             CM000048
00247  012180      IF M-SW = 1  MOVE 0 TO M-SW                            CM000048
00248  012190      MULTIPLY MV25A BY -1 GIVING MV25A.                     CM000048
00249  012200      PERFORM T.                                             CM000048
00250  012210      IF M-SW = 1      MOVE 0 TO M-SW                        CM000048
00251  012220      SUBTRACT MV25B FROM 0 GIVING MV25B.                    CM000048
00252  012230      MOVE 27 TO A.                                          CM000048
00253  012240      MOVE 9 TO B.                                           CM000048
00254  013010      ADD C, 140 GIVING D.                                   CM000048
00255  013020 Q.   PERFORM DMAKE-NEG THRU DMOVE-DATA 4 TIMES             CM000048
00256  013030      ADD 1 TO B.                                            CM000048
00257  013040      PERFORM DMAKE-NUMERIC THRU DMOVE-DATA 2 TIMES.         CM000048
00258  013050 P.   IF       N-SW = 1  MOVE 0 TO N-SW                     CM000048
00259  013060      SUBTRACT PSI1 FROM 0 GIVING PSI1.                      CM000048
00260  013070 O.   MOVE 20 TO B.                                          CM000048
00261  013080      PERFORM DMOVE-DATA.                                    CM000048
00262  013090      PERFORM DMAKE-NEG  THRU DMOVE-DATA 3 TIMES.            CM000048
00263  013100      ADD 1 TO B.                                            CM000048
00264  013110      PERFORM DMAKE-NUMERIC THRU DMOVE-DATA 3 TIMES.         CM000048
00265  013120 N.   IF       N-SW  = 1   MOVE 0 TO N-SW                   CM000048
00266  013130      SUBTRACT PSIMV1 FROM 0 GIVING PSIMV1.                  CM000048
00267  013140      MOVE 59 TO B.                                          CM000048
00268  013150      PERFORM V.                                             CM000048
00269  013160      IF M-SW = 1   MOVE 0 TO M-SW                           CM000048
00270  013170      MULTIPLY MV50A BY -1 GIVING MV50A.                     CM000048
00271  013180      PERFORM T.                                             CM000048
00272  013190      IF M-SW = 1  MOVE 0 TO M-SW                            CM000048
00273  013200      MULTIPLY MV50B BY -1 GIVING MV50B.                     CM000048
00274  013210      ADD 1 TO A.  MOVE 9 TO B.                              CM000048
00275  013220      PERFORM Q.                                             CM000048
00276  013230      IF       N-SW  = 1   MOVE 0 TO N-SW                    CM000048
00277  013240      SUBTRACT PSI2 FROM 0 GIVING PSI2.                      CM000048
00278  013250      PERFORM O.                                             CM000048
00279  014010      IF       N-SW = 1 MOVE 0 TO N-SW                       CM000048
00280  014020      SUBTRACT PSIMV2  FROM 0 GIVING PSIMV2.                 CM000048
00281  014030      MOVE 59 TO B.                                          CM000048
00282  014040      PERFORM V.                                             CM000048
```

6

```
00283   014050    IF M-SW = 1   MOVE 0 TO M-SW                          CM000048
00284   014060    MULTIPLY MV75A  BY -1 GIVING MV75A.                   CM000048
00285   014070    PERFORM T.                                            CM000048
00286   014080    IF M-SW = 1  MOVE 0 TO M-SW                           CM000048
00287   014090    SUBTRACT MV75B FROM 0 GIVING MV75B.                   CM000048
00288   014100    MOVE 29 TO A   MOVE 9 TO B.                           CM000048
00289   014110    PERFORM Q.                                            CM000048
00290   014120    IF       N-SW = 1 MOVE 0 TO N-SW                      CM000048
00291   014130    MULTIPLY PSI3 BY -1 GIVING PSI3.                      CM000048
00292   014140    PERFORM U.                                            CM000048
00293   014150    IF       N-SW = 1  MOVE 0 TO N-SW                     CM000048
00294   014160    MULTIPLY PSIMV3 BY -1 GIVING PSIMV3.                  CM000048
00295   014170    MOVE 59 TO B.                                         CM000048
00296   014180    PERFORM V.                                            CM000048
00297   014190    IF M-SW = 1  MOVE 0 TO M-SW                           CM000048
00298   014200    COMPUTE MV100A = MV100A * -1.                         CM000048
00299   014210    PERFORM T.                                            CM000048
00300   014220    IF M-SW = 1  MOVE 0 TO M-SW                           CM000048
00301   014230    COMPUTE MV100B =  (0 - MV100B).                       CM000048
00302   014240    MOVE 30 TO A.   MOVE 9 TO B.                          CM000048
00303   014250    PERFORM Q.                                            CM000048
00304   015010    IF       N-SW = 1 MOVE 0 TO N-SW                      CM000048
00305   015020    COMPUTE  PSI4 = (PSI4 * -1).                          CM000048
00306   015030    PERFORM U.                                            CM000048
00307   015040    IF       N-SW = 1 MOVE 0 TO N-SW                      CM000048
00308   015050    COMPUTE PSIMV4  = (PSIMV4 * -1).                      CM000048
00309   015060    MOVE 59 TO B.                                         CM000048
00310   015070    PERFORM V.                                            CM000048
00311   015080    IF M-SW = 1  MOVE 0 TO M-SW                           CM000048
00312   015090    COMPUTE MV75AA = (0 - MV75AA).                        CM000048
00313   015100    PERFORM T.                                            CM000048
00314   015110    IF M-SW = 1  MOVE 0 TO M-SW                           CM000048
00315   015120    COMPUTE MV75BB = (0 - MV75BB).                        CM000048
00316   015130    MOVE 31 TO A  MOVE 9 TO B.                            CM000048
00317   015140    PERFORM Q.                                            CM000048
00318   015150    IF       N-SW = 1 MOVE 0 TO N-SW                      CM000048
00319   015160    COMPUTE PSI5 = (PSI5 / -1).                           CM000048
00320   015170    PERFORM U.                                            CM000048
00321   015180    IF       N-SW = 1 MOVE 0 TO N-SW                      CM000048
00322   015190    COMPUTE PSIMV5 = (PSIMV5 * -1).                       CM000048
00323   015200    MOVE 59 TO B.                                         CM000048
00324   015210    PERFORM V.                                            CM000048
00325   015220    IF M-SW = 1 MOVE 0 TO M-SW                            CM000048
00326   015230    COMPUTE MV50AA = (MV50AA / -1).                       CM000048
00327   015240    PERFORM T.                                            CM000048
00328   015250    IF M-SW = 1 MOVE 0 TO M-SW                            CM000048
00329   016010    COMPUTE MV50BB = MV50BB * -1.                         CM000048
00330   016020    MOVE 32 TO A.   MOVE 9 TO B.                          CM000048
00331   016030    PERFORM Q.                                            CM000048
00332   016040    IF       N-SW = 1 MOVE 0 TO N-SW                      CM000048
00333   016050    COMPUTE PSI6 = (0 - PSI6).                            CM000048
00334   016060    PERFORM U.                                            CM000048
00335   016070    IF       N-SW = 1 MOVE 0 TO N-SW                      CM000048
00336   016080    COMPUTE PSIMV6 = (PSIMV6 * -1).                       CM000048
00337   016090    MOVE 59 TO B.                                         CM000048
00338   016100    PERFORM V.                                            CM000048
00339   016110    IF M-SW = 1 MOVE 0 TO M-SW                            CM000048
```

7

```
00340   016120        COMPUTE MV25AA = (MV25AA * -1).                          CM000048
00341   016130        PERFORM T.                                               CM000048
00342   016140        IF M-SW = 1 MOVE 0 TO M-SW                               CM000048
00343   016150        COMPUTE MV25BB = (MV25BB * -1).                          CM000048
00344   016160        MOVE 33 TO A.   MOVE 9 TO B.                             CM000048
00345   016170        PERFORM Q.                                               CM000048
00346   016180        IF       N-SW = 1 MOVE 0 TO N-SW                         CM000048
00347   016190        COMPUTE PSI7 = (0 - PSI7).                               CM000048
00348   016200        PERFORM O.                                               CM000048
00349   016210        IF       N-SW = 1 MOVE 0 TO N-SW                         CM000048
00350   016220        SUBTRACT PSIMV7 FROM 0 GIVING PSIMV7.                    CM000048
00351   016230        MOVE 59 TO B.                                            CM000048
00352   016240        PERFORM V.                                               CM000048
00353   016250        IF M-SW = 1 MOVE 0 TO M-SW                               CM000048
00354   017010        COMPUTE MVOAA = (MVOAA * -1).                            CM000048
00355   017020        PERFORM T.                                               CM000048
00356   017030        IF M-SW = 1  MOVE 0 TO M-SW                              CM000048
00357   017040        COMPUTE MVOBB = (MVOBB * -1).                            CM000048
00358   017050        MOVE 37 TO A.  MOVE 65 TO B.    MOVE 0 TO C.             CM000048
00359   017060        PERFORM MOVE-DATA 3 TIMES.                               CM000048
00360   017070        ADD 3 TO B.                                              CM000048
00361   017080        PERFORM MOVE-DATA 3 TIMES.                               CM000048
00362   017090        MOVE 38 TO A.   MOVE 18 TO B.                            CM000048
00363   017100 K.     PERFORM MAKE-NEG THRU MOVE-DATA 3 TIMES.                 CM000048
00364   017110        ADD 1 TO B.                                              CM000048
00365   017120        PERFORM MAKE-NUMERIC THRU MOVE-DATA 2 TIMES.             CM000048
00366   017130 H.     IF M-SW = 1  MOVE 0 TO M-SW                              CM000048
00367   017140        COMPUTE GOUT-AT = (GOUT-AT * -1).                        CM000048
00368   017150        MOVE 29 TO B.                                            CM000048
00369   017160        PERFORM MAKE-NEG THRU MOVE-DATA 3 TIMES.                 CM000048
00370   017170        ADD 1 TO B.                                              CM000048
00371   017180        PERFORM MAKE-NUMERIC THRU MOVE-DATA 3 TIMES.             CM000048
00372   017190        IF M-SW = 1 MOVE 0 TO M-SW                               CM000048
00373   017200        COMPUTE GOUTPSIA = (GOUTPSIA * -1).                      CM000048
00374   017210        MOVE 71 TO B.                                            CM000048
00375   017220        PERFORM MOVE-DATA 2 TIMES.                               CM000048
00376   017230        MOVE 78 TO B.                                            CM000048
00377   017240        PERFORM MOVE-DATA 2 TIMES.                               CM000048
00378   017250        MOVE 39 TO A.   MOVE 18 TO B.                            CM000048
00379   018010 L.     PERFORM MAKE-NEG THRU MOVE-DATA 3 TIMES.                 CM000048
00380   018020        ADD 1 TO B.                                              CM000048
00381   018030        PERFORM MAKE-NUMERIC THRU MOVE-DATA 3 TIMES.             CM000048
00382   018040 J.     IF M-SW = 1 MOVE 0 TO M-SW                               CM000048
00383   018050        COMPUTE GUNBALANCE = (GUNBALANCE * -1).                  CM000048
00384   018060        MOVE 42 TO B.                                            CM000048
00385   018070        PERFORM MOVE-DATA.                                       CM000048
00386   018080        MOVE 69 TO B.                                            CM000048
00387   018090 F.     PERFORM MAKE-NEG THRU MOVE-DATA 4 TIMES.                 CM000048
00388   018100        ADD 1 TO B.                                              CM000048
00389   018110        PERFORM MAKE-NUMERIC THRU MOVE-DATA 2 TIMES.             CM000048
00390   018120 GA.    IF M-SW = 1 MOVE 0 TO M-SW                               CM000048
00391   018130        COMPUTE GRCAL-TKN = (GRCAL-TKN * -1).                    CM000048
00392   018140        MOVE 80 TO B.                                            CM000048
00393   018150        PERFORM MOVE-DATA.                                       CM000048
00394   018160        MOVE 40 TO A.   MOVE 19 TO B.                            CM000048
00395   018170        PERFORM L.                                               CM000048
00396   018180        IF M-SW = 1 MOVE 0 TO M-SW                               CM000048
```

```
00397   018190        COMPUTE GFS-SEN = (GFS-SEN * -1).                          CM000048
00398   018200        MOVE 41 TO A.   MOVE 20 TO B.                              CM000048
00399   018210        PERFORM K.                                                 CM000048
00400   018220        IF M-SW = 1 MOVE 0 TO M-SW                                 CM000048
00401   018230        COMPUTE GMAX-N-LIN = (GMAX-N-LIN * -1).                    CM000048
00402   018240        MOVE 42 TO A.   MOVE 19 TO B.                              CM000048
00403   018250        PERFORM F.                                                 CM000048
00404   019010        IF M-SW = 1   MOVE 0 TO M-SW                               CM000048
00405   019020        COMPUTE GMAX-HYST = (GMAX-HYST * -1).                      CM000048
00406   019030        MOVE 43 TO A.   MOVE 21 TO B.                              CM000048
00407   019040        PERFORM MAKE-NEG THRU MOVE-DATA 2 TIMES.                   CM000048
00408   019050        ADD 1 TO B                                                 CM000048
00409   019060        PERFORM MAKE-NEG THRU MOVE-DATA 2 TIMES.
00410   019061        IF N-SW = 1 MOVE 0 TO N-SW MOVE 99.99 TO GMAX-N-REPT.
00411   019070        IF M-SW = 0   MOVE 0 TO M-SW                               CM000048
00412   019080        COMPUTE GMAX-N-REPT = (GMAX-N-REPT * -1).                  CM000048
00413   019090        MOVE 81 TO B.                                              CM000048
00414   019100        PERFORM MOVE-DATA.                                         CM000048
00415   019110        MOVE 46 TO A. MOVE 49 TO B.                                CM000048
00416   019120 II.    PERFORM MAKE-NEG THRU MOVE-DATA 5 TIMES.                   CM000048
00417   019130        ADD 1 TO B.                                                CM000048
00418   019140        PERFORM MAKE-NUMERIC THRU MOVE-DATA.                       CM000048
00419   019150 JJ.    IF M-SW = 1  MOVE 0 TO M-SW                                CM000048
00420   019160        COMPUTE G-RN01 = (G-RN01 * -1).                            CM000048
00421   019170 KK.    PERFORM MAKE-NEG THRU MOVE-DATA 7 TIMES.                   CM000048
00422   019180        ADD 1 TO B.                                                CM000048
00423   019190        PERFORM MAKE-NUMERIC THRU MOVE-DATA 3 TIMES.               CM000048
00424   019200 LL.    IF M-SW = 1 MULTIPLY G-RN02 BY -1 GIVING G-RN02            CM000048
00425   019210        MOVE 0 TO M-SW.                                            CM000048
00426   019220        PERFORM CC.                                                CM000048
00427   019230        IF M-SW = 1 MOVE 0 TO M-SW                                 CM000048
00428   019240        COMPUTE G-RN03 = (G-RN03 * -1).                            CM000048
00429   019241        IF N-SW = 1 MOVE 99999.99 TO G-RN03  MOVE 0 TO N-SW.
00430   019250        ADD C, 151 GIVING D.                                       CM000048
00431   020010        MOVE 47 TO A    MOVE 24 TO B.                              CM000048
00432   020020        PERFORM DMAKE-NUMERIC THRU DMOVE-DATA 2 TIMES.             CM000048
00433   020030        ADD 1 TO B                                                 CM000048
00434   020040        PERFORM  DMAKE-NUMERIC THRU DMOVE-DATA 2 TIMES.            CM000048
00435   020050        ADD 1 TO B.                                                CM000048
00436   020060        PERFORM  DMAKE-NUMERIC THRU DMOVE-DATA 2 TIMES.            CM000048
00437   020070        MOVE 49 TO B.                                              CM000048
00438   020080 AA.    PERFORM MAKE-NEG THRU MOVE-DATA 5 TIMES.                   CM000048
00439   020090        ADD 1 TO B.                                                CM000048
00440   020100        PERFORM MAKE-NUMERIC THRU MOVE-DATA 3 TIMES.               CM000048
00441   020110 BB.    IF M-SW = 1 MOVE 0 TO M-SW                                 CM000048
00442   020120        COMPUTE G-RN11 = (G-RN11 * -1).                            CM000048
00443   020130        PERFORM AA.                                                CM000048
00444   020140        IF M-SW = 1 MOVE 0 TO M-SW                                 CM000048
00445   020150        COMPUTE G-RN12 = (G-RN12 * -1).                            CM000048
00446   020160 CC.    PERFORM MAKE-NEG THRU MOVE-DATA 5 TIMES.                   CM000048
00447   020170        ADD 1 TO B.                                                CM000048
00448   020180        PERFORM MAKE-NUMERIC THRU MOVE-DATA 2 TIMES.               CM000048
00449   020190 DD.    IF M-SW = 1  MOVE 0 TO M-SW                                CM000048
00450   020200        COMPUTE G-RN13 = (G-RN13 * -1).                            CM000048
00451   020210 EE.    PERFORM MAKE-NEG THRU MOVE-DATA 6 TIMES.                   CM000048
00452   020220        ADD 1 TO B.                                                CM000048
00453   020230        PERFORM MAKE-NUMERIC THRU MOVE-DATA 3 TIMES.               CM000048
```

```
00454   020240 FF. IF M-SW = 1  MOVE 0 TO M-SW                          CM000048
00455   020250     COMPUTE G-RN14 = (G-RN14 * -1).                      CM000048
00456   021010     IF N-SW = 1 MOVE 999999.999  TO G-RN14 MOVE 0 TO N-SW. CM000048
00457   021020     MOVE 48 TO A. MOVE 49 TO B.                          CM000048
00458   021030     PERFORM AA.                                          CM000048
00459   021040     IF M-SW = 1  MOVE 0 TO M-SW                          CM000048
00460   021050     COMPUTE G-RN21 = (G-RN21 * -1).                      CM000048
00461   021060     PERFORM AA.                                          CM000048
00462   021070     IF M-SW = 1  MOVE 0 TO M-SW                          CM000048
00463   021080     COMPUTE G-RN22 = (G-RN22 * -1).                      CM000048
00464   021090     PERFORM CC.                                          CM000048
00465   021100     IF M-SW = 1 MOVE 0 TO M-SW                           CM000048
00466   021110     COMPUTE G-RN23 = (G-RN23 * -1).                      CM000048
00467   021120     PERFORM EE.                                          CM000048
00468   021130     IF M-SW = 1 MOVE 0 TO M-SW                           CM000048
00469   021140     COMPUTE G-RN24 = (0 - G-RN24).                       CM000048
00470   021150     IF N-SW = 1 MOVE 999999.999 TO G-RN24 MOVE 0 TO N-SW. CM000048
00471   021160     MOVE 49 TO A.   MOVE 18 TO B.                        CM000048
00472   021170     PERFORM DMAKE-NEG THRU DMOVE-DATA 3 TIMES            CM000048
00473   021180     ADD 1 TO B.                                          CM000048
00474   021190     PERFORM DMAKE-NUMERIC THRU DMOVE-DATA 2 TIMES.       CM000048
00475   021200     IF N-SW = 1  MOVE 0 TO N-SW                          CM000048
00476   021210     MOVE 999.99 TO GOP-AT.                               CM000048
00477   021220     IF M-SW = 1 MOVE 0 TO M-SW                           CM000048
00478   021230     COMPUTE GOP-AT =  (GOP-AT * -1).                     CM000048
00479   021240     MOVE 29 TO B.
00480   021250 GG. PERFORM DMAKE-NEG     THRU DMOVE-DATA 3 TIMES.       CM000048
00481   022010     ADD 1 TO B.                                          CM000048
00482   022020     PERFORM DMAKE-NUMERIC THRU DMOVE-DATA 3 TIMES.       CM000048
00483   022030 HH. IF N-SW = 1 MOVE 0 TO N-SW                           CM000048
00484   022040     MOVE 999.999 TO GOP-PSIA.                            CM000048
00485   022050     IF M-SW = 1 MOVE 0 TO M-SW                           CM000048
00486   022060     COMPUTE GOP-PSIA = (GOP-PSIA * -1).                  CM000048
00487   022070     MOVE 49 TO B.                                        CM000048
00488   022080     PERFORM AA.                                          CM000048
00489   022090     IF M-SW = 1  MOVE 0 TO M-SW                          CM000048
00490   022100     COMPUTE G-RN31 = (G-RN31 * -1).                      CM000048
00491   022110     PERFORM AA.                                          CM000048
00492   022120     IF M-SW = 1  MOVE 0 TO M-SW                          CM000048
00493   022130     COMPUTE G-RN32 = (G-RN32 * -1).                      CM000048
00494   022140     PERFORM CC.                                          CM000048
00495   022150     IF M-SW = 1  MOVE 0 TO M-SW                          CM000048
00496   022160     COMPUTE G-RN33 = (G-RN33 * -1).                      CM000048
00497   022170     PERFORM EE.                                          CM000048
00498   022180     IF M-SW = 1  MOVE 0 TO M-SW                          CM000048
00499   022190     COMPUTE G-RN34 = (0 - G-RN34).                       CM000048
00500   022200     IF N-SW = 1  MOVE 0 TO N-SW                          CM000048
00501   022210     MOVE 999999.999 TO G-RN34.                           CM000048
00502   022220     MOVE 50 TO A. MOVE 18 TO B.                          CM000048
00503   022230     PERFORM GG.                                          CM000048
00504   022240     IF M-SW = 1 MOVE 0 TO M-SW                           CM000048
00505   022250     COMPUTE GOP-UNB = GOP-UNB * -1.                      CM000048
00506   023010     IF N-SW = 1 MOVE 0 TO N-SW                           CM000048
00507   023020     MOVE 999.999 TO GOP-UNB.                             CM000048
00508   023030     MOVE 49 TO B.                                        CM000048
00509   023040     PERFORM AA.                                          CM000048
00510   023050     IF M-SW = 1  MOVE 0 TO M-SW                          CM000048
```

```
00511   023060      COMPUTE G-RN41 = G-RN41 * -1.                          CM000048
00512   023070      PERFORM AA.                                            CM000048
00513   023080      IF M-SW = 1 MOVE 0 TO M-SW                             CM000048
00514   023090      COMPUTE G-RN42 = (0 - G-RN42).                         CM000048
00515   023100      PERFORM CC.                                            CM000048
00516   023110      IF M-SW = 1 MOVE 0 TO M-SW                             CM000048
00517   023120      COMPUTE G-RN43 = (G-RN43 * -1).                        CM000048
00518   023130      PERFORM EE.                                            CM000048
00519   023140      IF M-SW = 1 MOVE 0 TO M-SW                             CM000048
00520   023150      COMPUTE G-RN44 = G-RN44 * -1.                          CM000048
00521   023160      IF N-SW = 1 MOVE 0 TO N-SW                             CM000048
00522   023170      MOVE 999999.999 TO G-RN44.                             CM000048
00523   023180      MOVE 51 TO A.   MOVE 19 TO B.                          CM000048
00524   023190      PERFORM GG.                                            CM000048
00525   023200      IF M-SW = 1 MOVE 0 TO M-SW                             CM000048
00526   023210      COMPUTE GOP-FSS = GOP-FSS * -1.                        CM000048
00527   023220      IF N-SW = 1 MOVE 0 TO N-SW                             CM000048
00528   023230      MOVE 999.999 TO GOP-FSS.                               CM000048
00529   023240      MOVE 49 TO B.                                          CM000048
00530   023250      PERFORM II.                                            CM000048
00531   024010      IF M-SW = 1 MOVE 0 TO M-SW                             CM000048
00532   024020      COMPUTE G-RNL1 = G-RNL1 * -1.                          CM000048
00533   024030      PERFORM KK.                                            CM000048
00534   024040      IF M-SW = 1 MOVE 0 TO M-SW                             CM000048
00535   024050      COMPUTE G-RNL2 = G-RNL2 * -1.                          CM000048
00536   024060      PERFORM CC.                                            CM000048
00537   024070      IF M-SW = 1  MOVE 0 TO M-SW                            CM000048
00538   024080      COMPUTE G-RNL3 = G-RNL3 * -1.                          CM000048
00539   024090      MOVE 0 TO C.                                           CM000048
00540   024100      MOVE 52 TO A. MOVE 20 TO B.                            CM000048
00541   024110      PERFORM K.
00542   024120      IF M-SW = 1 MOVE 0 TO M-SW                             CM000048
00543   024130      COMPUTE BMAX-N-LIN = (BMAX-N-LIN * -1).                CM000048
00544   024140      IF N-SW = 1 MOVE 9999.99 TO BMAX-N-LIN MOVE 0 TO N-SW. CM000048
00545   024150      MOVE 53 TO A. MOVE 19 TO B.                            CM000048
00546   024160      PERFORM F.                                             CM000048
00547   024170      IF M-SW = 1 MOVE 0 TO M-SW                             CM000048
00548   024180      COMPUTE BMAX-HYST = (BMAX-HYST * -1).                  CM000048
00549   024190      IF N-SW = 1 MOVE 9999.99 TO BMAX-HYST MOVE 0 TO N-SW.  CM000048
00550   024200      MOVE 54 TO A.  MOVE 21 TO B.                           CM000048
00551   024210      PERFORM MAKE-NEG THRU MOVE-DATA 2 TIMES.               CM000048
00552   024220      ADD 1 TO B.                                            CM000048
00553   024230      PERFORM MAKE-NUMERIC THRU MOVE-DATA 2 TIMES.           CM000048
00554   024240      IF M-SW = 1 MOVE 0 TO M-SW                             CM000048
00555   024250      COMPUTE BMAX-N-REPT = BMAX-N-REPT * -1.                CM000048
00556   025010      IF N-SW = 1 MOVE 0 TO N-SW                             CM000048
00557   025020      MOVE 99.99 TO BMAX-N-REPT.                             CM000048
00558   025030      MOVE 65 TO B.                                          CM000048
00559   025040      PERFORM MOVE-DATA 20 TIMES.                            CM000048
00560   025050      MOVE 57 TO A.   MOVE 64 TO B.                          CM000048
00561   025060      PERFORM NN. MOVE 77 TO B.                              CM000048
00562   025070      PERFORM NN.                                            CM000048
00563   025080      WRITE GOT.                                             CM000048
00564   025100      GO TO FIRS.                                            CM000048
00565   025110 G-EOF.                                                      CM000048
00566   025120      CLOSE GIL-IN GIL-OT.                                   CM000048
00567   025130      STOP RUN.                                              CM000048
```

II

```
026010 READ-GILMORE.                                                    CM000048
026020     READ GIL-IN AT ENO GO TO G-EOF.                              CM000048
026030     ADD 1 TO A                                                   CM000048
026040     MOVE GIN TO GIL-REC (A).                                     CM000048
026050 MAKE-NEG.                                                        CM000048
026060     IF G (A, B) = '-' MOVE 1 TO M-SW                             CM000048
026070     MOVE SPACE TO G (A, B).                                      CM000048
            IF G (A, B) = '*' MOVE 1 TO N-SW.
026080 MAKE-NUMERIC.                                                    CM000048
026090     IF G (A, B) = SPACE  MOVE '0' TO G (A, B).                   CM000048
026100     IF G (A, B) = 'N' OR G (A, B) = 'A' MOVE 1 TO N-SW.          CM000048
026110 MOVE-DATA.                                                       CM000048
026120     MOVE G (A, B) TO GIL (C).                                    CM000048
026130     ADD 1 TO B.  ADD 1 TO C.                                     CM000048
026140 DMAKE-NEG.                                                       CM000048
026150     IF G (A, B) = '-' MOVE 1 TO M-SW                             CM000048
026160     MOVE SPACE TO G (A, B).                                      CM000048
            IF G (A, B) = '*' MOVE 1 TO N-SW.
026170 DMAKE-NUMERIC.                                                   CM000048
026180     IF G (A, B) = SPACE MOVE '0' TO G (A, B).                    CM000048
026190     IF G (A, B) = 'N' OR G (A, B) = 'A' MOVE 1 TO N-SW.          CM000048
026200 DMOVE-DATA.                                                      CM000048
026210     MOVE G (A, B) TO GIL (D).                                    CM000048
026220     ADD 1 TO B.  ADD 1 TO D.                                     CM000048
```

1

```
00001        01  IDENTIFICATION DIVISION.                                          CM000020
00002    001010  PROGRAM-ID. 'CM000023'.                                           CM000023
00003 **     04  ENVIRONMENT DIVISION.                                             CM000020
00004        05  CONFIGURATION SECTION.                                            CM000020
00005        06  SOURCE-COMPUTER.     IBM-360 H50.                                CM000020
00006        07  OBJECT-COMPUTER.     IBM-360 H50.                                CM000020
00007        08  INPUT-OUTPUT SECTION.                                            CM000020
00008        09  FILE-CONTROL.                                                    CM000020
00009        10                        SELECT A-FILE ASSIGN 'AFILEREC' UTILITY.    CM000020
00010        11                        SELECT B-FILE ASSIGN 'BFILEREC' UTILITY.    CM000020
00011        12                        SELECT C-FILE ASSIGN 'CFILEREC' UTILITY.    CM000020
00012      1030                    SELECT AOUT ASSIGN 'AOUTREC' UTILITY.
00013      1040                    SELECT BOUT ASSIGN 'BOUTREC' UTILITY.
00014      1050                    SELECT COUT ASSIGN 'COUTREC' UTILITY.
00015 **     01  DATA DIVISION.                                                    CM000020
00016        02  FILE SECTION.                                                    CM000020
00017        03  FD  A-FILE         RECORD CONTAINS 80 CHARACTERS                 CM000020
00018        04                      LABEL RECORDS ARE STANDARD                    CM000020
00019        05                      RECORDING MODE IS F                           CM000020
00020        06                      BLOCK CONTAINS 1 RECORDS                      CM000020
00021        07                      DATA RECORD IS A-REC.                         CM000020
00022        08  01  A-REC.                                                        CM000020
00023        09      02  FILLER      PICTURE X(3).
00024        10      02  FILLER      PICTURE 9.
00025        11      02  FILLER      PICTURE X(76).
00026        14  FD  B-FILE         RECORD CONTAINS 80 CHARACTERS                 CM000020
00027        15                      LABEL RECORDS ARE STANDARD                    CM000020
00028        16                      RECORDING MODE IS F                           CM000020
00029        17                      BLOCK CONTAINS 1 RECORDS                      CM000020
00030        18                      DATA RECORD IS B-REC.                         CM000020
00031        19  01  B-REC.                                                        CM000020
00032 **     19      02  FILLER      PICTURE X(4).
00033        20      02  FILLER      PICTURE 9.
00034        21      02  FILLER      PICTURE X(75).
00035 **     01  FD  C-FILE         RECORD CONTAINS 80 CHARACTERS                 CM000020
00036        02                      LABEL RECORDS ARE STANDARD                    CM000020
00037        03                      RECORDING MODE IS F                           CM000020
00038        04      BLOCK CONTAINS 1 RECORDS                                      CM000020
00039        05                      DATA RECORD IS C-REC.                         CM000020
00040        06  01  C-REC.                                                        CM000020
00041        45      02  FILLER      PICTURE X(4).
00042        451     02  FILLER      PICTURE 9.
00043        452     02  FILLER      PICTURE X(75).
00044    001060  FD  AOUT            RECORD CONTAINS 80 CHARACTERS                 CM000023
00045    001070                      LABEL RECORDS ARE STANDARD                    CM000023
00046    001080                      RECORDING MODE IS F                           CM000023
00047    001090                      BLOCK CONTAINS 45 RECORDS                     CM000023
00048    001100                      DATA RECORD IS ACARD.                         CM000023
00049    001110  01  ACARD.                                                        CM000023
00050 **  1120       02  FILLER      PICTURE X(3).
00051     1121       02  FILLER      PICTURE 9.
00052     1122       02  FILLER      PICTURE X(76).
00053    001130  FD  BOUT            RECORD CONTAINS 80 CHARACTERS                 CM000023
00054    001140                      LABEL RECORDS ARE STANDARD                    CM000023
```

2

```
00055   001150                  RECORDING MODE IS F                          CM000023
00056   001160                  BLOCK CONTAINS 45 RECORDS                    CM000023
00057   001170                  DATA RECORD IS BCARD.                        CM000023
00058   001180 01  BCARD.                                                    CM000023
00059 ** 1180      02  FILLER   PICTURE X(4).
00060    1181      02  FILLER   PICTURE 9.
00061    1182      02  FILLER   PICTURE X(75).
00062   001200 FD  COUT         RECORD CONTAINS 80 CHARACTERS                CM000023
00063   001210                  LABEL RECORDS ARE STANDARD                   CM000023
00064   001220                  RECORDING MODE IS F                          CM000023
00065   001230                  BLOCK CONTAINS 45 RECORDS                    CM000023
00066   001240                  DATA RECORD IS CCARD.                        CM000023
00067 ** 2010  01  C-CARD.
00068    2020      02  FILLER   PICTURE X(4).
00069    2021      02  FILLER   PICTURE 9.
00070    2022      02  FILLER   PICTURE X(75).
00071 **   19  WORKING-STORAGE SECTION.                                      CM000020
00072      20      77  LN-CT    PICTURE S99 COMPUTATIONAL-3 VALUE ZERO.      CM000020
00073   002030 PROCEDURE DIVISION.                                           CM000023
00074   002040 START. OPEN INPUT A-FILE. OPEN INPUT B-FILE. OPEN INPUT C-FILE. CM000023
00075   002050     OPEN OUTPUT AOUT. OPEN OUTPUT BOUT. OPEN OUTPUT COUT.     CM000023
00076   002060 A-READ. READ A-FILE AT END GO TO B-ENTRY.                     CM000023
00077   002070     WRITE ACARD FROM A-REC. GO TO A-READ.                     CM000023
00078   002080 B-ENTRY. READ B-FILE AT END GO TO C-ENTRY.                    CM000023
00079   002090     WRITE BCARD FROM B-REC. GO TO B-ENTRY.                    CM000023
00080   002100 C-ENTRY. READ C-FILE AT END GO TO ENDIT.                      CM000023
00081   002110     WRITE C-CARD FROM C-REC. GO TO C-ENTRY.                   CM000023
00082   002120 ENDIT. CLOSE A-FILE. CLOSE B-FILE. CLOSE C-FILE. CLOSE AOUT.  CM000023
00083   002130     CLOSE BOUT. CLOSE COUT.                                   CM000023
00084   002140     STOP RUN.                                                 CM000023
```

```
00001   00101  IDENTIFICATION DIVISION.                                          CM000050
00002   00102  PROGRAM-ID. 'CM000050'.                                           CM000050
00003   00103  AUTHOR. JACK ROSE.                                                CM000050
00004   00104  INSTALLATION.  ARO INC  TULLAHOMA  TENN.                          CM000050
00005   00105  DATE-WRITTEN. OCT 16, 1967.                                       CM000050
00006   00106  DATE-COMPILED. DEC 14,1968                                        CM000050
00007   00107  SECURITY.                                                         CM000050
00008   00108  REMARKS.    PROGRAM SELECTS MOST RECENT TRANSDUCER FROM GILMORE. CM000050
00009   00109  ENVIRONMENT DIVISION.                                             CM000050
00010   00110  CONFIGURATION SECTION.                                            CM000050
00011   00111  SOURCE-COMPUTER. IBM-360 H50.                                     CM000050
00012   00112  OBJECT-COMPUTER. IBM-360 H50.                                     CM000050
00013   00113  INPUT-OUTPUT SECTION.                                             CM000050
00014   00114  FILE-CONTROL.                                                     CM000050
00015   00115      SELECT  GIL-IN  ASSIGN  '1001'  UTILITY.                      CM000050
00016   00116      SELECT  GIL-OUT ASSIGN  '0001'  UTILITY.                      CM000050
00017   00117  DATA DIVISION.                                                    CM000050
00018   00118  FILE SECTION.                                                     CM000050
00019   00219  FD  GIL-IN  RECORDING F   BLOCK 1 RECORDS   RECORD 747           CM000050
00020   00220              LABEL RECORDS STANDARD   DATA RECORD IGIL.            CM000050
00021   00221  01  IGIL.                                                         CM000050
00022   00222      02  FILLER   PICTURE   X(10).                                 CM000050
00023   00223      02  INSTR-NO PICTURE   X(16).                                 CM000050
00024   00224      02  FILLER   PICTURE   X(104).                                CM000050
00025   00225      02  CAL-DATE.                                                 CM000050
00026 **00201          03  CMO      PICTURE 99.                                  CM000050
00027   00202          03  CDY      PICTURE 99.                                  CM000050
00028   00203          03  CYR      PICTURE 99.                                  CM000050
00029   00204      02  FILLER       PICTURE X(611).                              CM000050
00030   00206  FD  GIL-OUT      RECORDING F  BLOCK 1 RECORDS  RECORD 747         CM000050
00031   00207                   LABEL RECORDS STANDARD  DATA RECORD OGIL.        CM000050
00032   00208  01  OGIL.                                                         CM000050
00033   00209      02  FILLER  PICTURE X(747).                                   CM000050
00034   00210  WORKING-STORAGE SECTION.                                          CM000050
00035   00211  77  INS-SW       PICTURE  X(16)  VALUE SPACE.                     CM000050
00036   003010 PROCEDURE DIVISION.                                               CM000050
00037   00302      OPEN INPUT GIL-IN  OUTPUT GIL-OUT.                            CM000050
00038   00303      READ GIL-IN AT END GO TO EOF.                                 CM000050
00039   003031 SET-SW.                                                           CM000050
00040   00304      MOVE IGIL TO OGIL.                                            CM000050
00041   00305      MOVE INSTR-NO TO INS-SW.                                      CM000050
00042   00306  READG.                                                            CM000050
00043   00307      READ GIL-IN AT END GO TO EOF.                                 CM000050
00044   00309      IF INSTR-NO = INS-SW MOVE IGIL TO OGIL  GO TO READG.          CM000050
00045   00310      WRITE OGIL.                                                   CM000050
00046   00311      GO TO SET-SW.                                                 CM000050
00047   00312  EOF.                                                              CM000050
00048   00313      WRITE OGIL.                                                   CM000050
00049   00314      CLOSE GIL-IN GIL-OUT.                                         CM000050
00050   00315      STOP RUN.                                                     CM000050
```

1

```
00001   001010 IDENTIFICATION DIVISION.                                          CM000051
00002   001020 PROGRAM-ID. 'CM000051'.                                           CM000051
00003   001030 AUTHOR. JACK ROSE.                                                CM000051
00004   001040 INSTALLATION.  ARO INC  TULLAHOMA  TENN.                          CM000051
00005   001050 DATE-WRITTEN. OCT 26, 1967.                                       CM000051
00006   001060 DATE-COMPILED. DEC 14,1968                                        CM000051
00007   001070 SECURITY.                                                         CM000051
00008   001080 REMARKS.     PROGRAM UPDATES PRESSURE TRANSDUCER ON MASTER.       CM000051
00009   001090 ENVIRONMENT DIVISION.                                             CM000051
00010   001100 CONFIGURATION SECTION.                                            CM000051
00011   001110 SOURCE-COMPUTER. IBM-360 H50.                                     CM000051
00012   001120 OBJECT-COMPUTER. IBM-360 H50.                                     CM000051
00013   001130 INPUT-OUTPUT SECTION.                                             CM000051
00014   001140 FILE-CONTROL.                                                     CM000051
00015   001150      SELECT  GIL-IN  ASSIGN  'I001'  UTILITY.                     CM000051
00016   001160      SELECT  GIL-OUT ASSIGN  'D001'  UTILITY.                     CM000051
00017 **001160      SELECT MAS-IN  ASSIGN  'M001'  UTILITY.                      CM000051
00018   001170 DATA DIVISION.                                                    CM000051
00019   001180 FILE SECTION.                                                     CM000051
00020   002190 FD  GIL-IN  RECORDING F   BLOCK 1 RECORDS   RECORD 747            CM000051
00021   002200             LABEL RECORDS STANDARD   DATA RECORD IGIL.            CM000051
00022   002210 01  IGIL.                                                         CM000051
00023   002220     02  FILLER   PICTURE   X(10).                                 CM000051
00024   002230     02  INSTR-NO PICTURE   X(16).                                 CM000051
00025   002240     02  FILLER   PICTURE   X(104).                                CM000051
00026   002250     02  CAL-DATE.                                                 CM000051
00027 **002010         03  CMO     PICTURE 99.                                   CM000051
00028   002020         03  CDY     PICTURE 99.                                   CM000051
00029   002030         03  CYR     PICTURE 99.                                   CM000051
00030   002040     02  FILLER      PICTURE X(611).                               CM000051
00031   002060 FD  GIL-OUT      RECORDING F  BLOCK 1 RECORDS  RECORD 747         CM000051
00032   002070                  LABEL RECORDS STANDARD  DATA RECORD OGIL.        CM000051
00033   002080 01  OGIL.                                                         CM000051
00034   002090     02  FILLER  PICTURE X(10).                                   CM000051
00035   002100     02  OINS-NO PICTURE X(16).                                   CM000051
00036   002110     02  FILLER  PICTURE X(721).                                  CM000051
00037   002120 FD  MAS-IN       RECORDING F  BLOCK 1 RECORDS RECORD 747          CM000051
00038   002130                  LABEL RECORDS STANDARD  DATA RECORD MAS.         CM000051
00039   002140 01  MAS.                                                          CM000051
00040   002150     02  FILLER  PICTURE X(10).                                   CM000051
00041   002160     02  MINSN   PICTURE X(16).                                   CM000051
00042   002170     02  FILLER  PICTURE X(721).                                  CM000051
00043   002190 WORKING-STORAGE SECTION.                                          CM000051
00044   003010 PROCEDURE DIVISION.                                               CM000051
00045   003020     OPEN INPUT MAS-IN GIL-IN OUTPUT GIL-OUT.                      CM000051
00046   003030     READ MAS-IN AT END GO TO MEOF.                                CM000051
00047   003040 READ-GIL.                                                         CM000051
00048   003050     READ GIL-IN AT END GO TO GEOF.                                CM000051
00049   003060 CK-INS.                                                           CM000051
00050   003070     IF MINSN < INSTR-NO GO TO LO-MAS.                             CM000051
00051   003080     IF MINSN = INSTR-NO GO TO REPLACE-I.                          CM000051
00052   003090     MOVE IGIL TO OGIL.                                            CM000051
00053   003110     WRITE OGIL.                                                   CM000051
00054   003120     READ GIL-IN AT END GO TO GEOFL.
```

2

```
00055   003121      GO TO CK-INS.
00056   003130 LO-MAS.                                                  CM000051
00057   003140      MOVE MAS TO OGIL                                    CM000051
00058   003160      WRITE OGIL.                                         CM000051
00059   003170 READ-MAS.                                                CM000051
00060   003180      READ MAS-IN AT END GO TO MEOF.                      CM000051
00061   003190      GO TO CK-INS.                                       CM000051
00062   003200 REPLACE-1.                                               CM000051
00063   003210      MOVE IGIL TO OGIL.                                  CM000051
00064   003230      WRITE OGIL.                                         CM000051
00065   003240      READ GIL-IN AT END GO TO GEOF.                      CM000051
00066   003250      GO TO READ-MAS.                                     CM000051
00067   003260 GEOF1.
00068   003270      WRITE OGIL FROM MAS.
00069   004010 GEOF.                                                    CM000051
00070   004020      READ MAS-IN AT END GO TO ASEND.                     CM000051
00071   004030      WRITE OGIL FROM MAS.                                CM000051
00072   004040      GO TO GEOF.                                         CM000051
00073   004050 MEOF.                                                    CM000051
00074   004060      WRITE OGIL FROM IGIL.                               CM000051
00075   004070      READ GIL-IN AT END GO TO ASEND.                     CM000051
00076   004080      GO TO MEOF.                                         CM000051
00077   004090 ASEND.                                                   CM000051
00078   004100      CLOSE MAS-IN GIL-IN GIL-OUT.                        CM000051
00079   004110      STOP RUN.                                           CM000051
```

1

```
00001   001010 IDENTIFICATION DIVISION.                                    CM000095
00002   001020 PROGRAM-ID. 'CM000096'.                                     CM000095
00003   001030 AUTHOR. ROSE.                                               CM000095
00004   001040 ENVIRONMENT DIVISION.                                       CM000095
00005   001050 CONFIGURATION SECTION.                                      CM000095
00006   001060 SOURCE-COMPUTER. IBM-360 H50.                               CM000095
00007   001070 OBJECT-COMPUTER. IBM-360 H50.                               CM000095
00008   001080 INPUT-OUTPUT SECTION.                                       CM000095
00009   001090 FILE-CONTROL.                                               CM000095
00010   001110     SELECT  HOOK  ASSIGN 'HOOK'  UTILITY.                   CM000095
00011   001120     SELECT  CFILE ASSIGN 'CFILE' UTILITY.                   CM000095
00012   001140     SELECT  LIST  ASSIGN 'LIST'  UTILITY.                   CM000095
00013   001150     SELECT  OCARD ASSIGN 'OCARD' UTILITY.                   CM000095
00014   001170 DATA DIVISION.                                              CM000095
00015   001180 FILE SECTION.                                               CM000095
00016   002150 FD  LIST     RECORDING F   BLOCK 12 RECORDS  RECORD 132     CM000095
00017   002160              LABEL RECORDS OMITTED   DATA RECORD LIT.       CM000095
00018   002170 01  LIT     PICTURE  X(132).                                CM000095
00019   003010 FD  CFILE    RECORD CONTAINS 80 CHARACTERS                  CM000095
00020   003020              LABEL RECORDS ARE STANDARD                     CM000095
00021   003030              RECORDING MODE IS F                            CM000095
00022   003040              BLOCK CONTAINS 45 RECORDS                      CM000095
00023   003050              DATA RECORD IS CFIL.                           CM000095
00024   003060 01  CFIL.                                                   CM000095
00025   003070     02  C1      PICTURE  X(4).                              CM000095
00026   003080     02  C2      PICTURE  9.                                 CM000095
00027   003090     02  C3      PICTURE  X(7).                              CM000095
00028   003100     02  C4      PICTURE  X(11).                             CM000095
00029   003110     02  C5      PICTURE  X(9).                              CM000095
00030   003120     02  C6      PICTURE  X(9).                              CM000095
00031   003130     02  C7      PICTURE  X(7).                              CM000095
00032   003140     02  C8      PICTURE  X(4).                              CM000095
00033   003150     02  C9      PICTURE  X.                                 CM000095
00034   003160     02  C10     PICTURE  X(9).                              CM000095
00035   003170     02  C11     PICTURE  X(9).
00036   003180     02  C11B    PICTURE  XXX.                               CM000095
00037   003190     02  C12     PICTURE  X(6).                              CM000095
00038   004010 FD  HOOK     RECORDING F  BLOCK 1 RECORDS  RECORD 133       CM000095
00039   004020              LABEL RECORDS STANDARD  DATA RECORD HOK.       CM000095
00040   004030 01  HOK.                                                    CM000095
00041   004040     02  FILLER  PICTURE  X.                                 CM000095
00042   004050     02  HPAR    PICTURE  X(9).                              CM000095
00043   004060     02  FILLER  PICTURE  X(58).                            CM000095
00044   004070     02  HUDC    PICTURE  X(5).                              CM000095
00045   004080     02  FILLER  PICTURE  X(25).                            CM000095
00046   004090     02  HRDOUT  PICTURE  X(5).                             CM000095
00047   004100     02  RHRDOUT REDEFINES HRDOUT.                          CM000095
00048   004110         03  HR1     PICTURE  X.                             CM000095
00049   004120         03  HR2     PICTURE  X.                             CM000095
00050   004130         03  HR3     PICTURE  X.                             CM000095
00051   004131         03  HHR3 REDEFINES  HR3  PICTURE 9.
00052   004140         03  HR45    PICTURE  XX.                            CM000095
00053   004141         03  RHR45   REDEFINES HR45  PICTURE 99.            CM000095
00054   004150     02  RRHRDOUT REDEFINES RHRDOUT.                        CM000095
```

2

```
00055   004160          03  HR12    PICTURE  XX.                          CM000095
00056   004170          03  HR345   PICTURE  XXX.                         CM000095
00057   004180          03  R345 REDEFINES HR345  PICTURE 999.            CM000095
00058   004181      02  HROT REDEFINES HRDDUT.                            CM000095
00059   004182          03  HRDT1   PICTURE X.                            CM000095
00060   004183          03  HRD23   PICTURE 99.                           CM000095
00061   004184          03  HR045   PICTURE XX.                           CM000095
00062   004210      02  FILLER  PICTURE  X(20).                           CM000095
00063   004220      02  HITEM   PICTURE  XXXX.                            CM000095
00064   004230      02  FILLER  PICTURE  X(6).                            CM000095
00065   005060 FD   DCARD   RECORDING F   BLOCK 1  RECORDS  RECORD 41
00066   005070              LABEL RECORDS STANDARD  DATA RECORD DCAR.     CM000095
00067   005090 01   DCAR.                                                 CM000095
00068   005090      02  DR1     PICTURE  X(9).                            CM000095
00069   005100      02  FILLER  PICTURE  X.                               CM000095
00070   005110      02  DR2     PICTURE  XX.                              CM000095
00071   005111      02  RDR   REDEFINES DR2.                              CM000095
00072   005112          03  RDR1    PICTURE  X.                           CM000095
00073   005113          03  RDR2    PICTURE  X.                           CM000095
00074   005120      02  FILLER  PICTURE  X.                               CM000095
00075   005130      02  DR3     PICTURE  XX.                              CM000095
00076   005131      02  RDR3 REDEFINES DR3.                               CM000095
00077   005132          03  DR3A    PICTURE X.                            CM000095
00078   005133          03  DR3B    PICTURE X.                            CM000095
00079   005140      02  FILLER  PICTURE  X.                               CM000095
00080   005150      02  DR4     PICTURE  XX.                              CM000095
00081   005151      02  RDR4 REDEFINES DR4.                               CM000095
00082   005152          03  DR4A    PICTURE X.                            CM000095
00083   005153          03  DR4B    PICTURE X.                            CM000095
00084   005160      02  FILLER  PICTURE  X.                               CM000095
00085   005170      02  DR5     PICTURE  XX.                              CM000095
00086   005171      02  RDR5 REDEFINES DR5.                               CM000095
00087   005172          03  DR5A    PICTURE X.                            CM000095
00088   005173          03  DR5B    PICTURE X.                            CM000095
00089   005180      02  FILLER  PICTURE  X.                               CM000095
00090   005190      02  DR7     PICTURE  XXX.                             CM000095
00091   005191      02  RDR7  REDEFINES  DR7.                             CM000095
00092   005192          03  RDR7A   PICTURE X.                            CM000095
00093   005193          03  RDR7B   PICTURE 99.                           CM000095
00094   005194      02  RRDR7 REDEFINES  DR7.                             CM000095
00095   005195          03  RR7A    PICTURE X.                            CM000095
00096   005196          03  RR7B    PICTURE X.                            CM000095
00097   005197          03  RR7C    PICTURE X.                            CM000095
00098   005200      02  FILLER  PICTURE  X.                               CM000095
00099   005210      02  DR8     PICTURE  XXX.                             CM000095
00100   005211      02  RDR8  REDEFINES  DR8.                             CM000095
00101   005212          03  RDR8A   PICTURE X.                            CM000095
00102   005213          03  RDR8B   PICTURE XX.                           CM000095
00103   005220      02  FILLER  PICTURE  X(10).                           CM000095
00104   005230      02  DR6     PICTURE  XX.                              CM000095
00105   023010 WORKING-STORAGE SECTION.                                   CM000095
00106   023020 77   J       PICTURE   999.                                CM000095
00107   023030 77   K       PICTURE   999.                                CM000095
00108   023040 77   SW1     PICTURE   9     VALUE 0.                      CM000095
00109   023050 77   MSW1    PICTURE   9     VALUE 0.                      CM000095
00110   023060 77   MSW2    PICTURE   9     VALUE 0.                      CM000095
00111   023070 77   MSW3    PICTURE   9     VALUE 0.                      CM000095
```

3

```
023080 77  NEG-SW  PICTURE   9    VALUE 0.                                CM000095
023090 77  JJ      PICTURE   999  VALUE 0.                                CM000095
023100 77  JECT    PICTURE   99   VALUE 50.                               CM000095
023110 77  KK      PICTURE   999  VALUE 0.                                CM000095
**011010 01  SVTABLE.                                                     CM000095
011020     02  SVTABL  OCCURS 60.                                        CM000095
011050         03  SV3    PICTURE  X(9)   OCCURS  12.                     CM000095
011080 01  DOTABLE.                                                       CM000095
011090     02  OIDDLE  OCCURS 7.
011100         03  DD1     PICTURE  X      OCCURS  64.
011110         03  DD2     PICTURE  XX     OCCURS  64.                     CM000095
011120         03  DD3     PICTURE  X(9)   OCCURS  64.                     CM000095
011130         03  DD4     PICTURE  XXX    OCCURS  64.                     CM000095
011140         03  DD5     PICTURE  XX     OCCURS  64.                     CM000095
011150         03  DD6     PICTURE  X(9)   OCCURS  64.                     CM000095
011160         03  DD7     PICTURE  XX     OCCURS  64.                     CM000095
011170         03  DD8     PICTURE  X(9)   OCCURS  64.                     CM000095
011180         03  DD9     PICTURE  XX     OCCURS  64.                     CM000095
011190         03  DD10    PICTURE  X(9)   OCCURS  64.                     CM000095
011200         03  DD11    PICTURE  XX     OCCURS  64.                     CM000095
011201 01  DOTAB2.
011202     02  DADDLE  OCCURS 7.
011210         03  DD12    PICTURE  X(9)   OCCURS  64.                     CM000095
011220         03  DD13    PICTURE  XX     OCCURS  64.                     CM000095
011230         03  DD14    PICTURE  X(9)   OCCURS  64.                     CM000095
011240         03  DD15    PICTURE  X(10)  OCCURS  64.                     CM000095
011250         03  DD16    PICTURE  X(14)  OCCURS  64.                     CM000095
011260         03  DDSN    PICTURE  X      OCCURS  64.                     CM000095
019010 01  DOLIST.                                                        CM000095
019020     02  FILLER  PICTURE  X(4)   VALUE SPACE.                        CM000095
019030     02  LDD1    PICTURE  9.                                        CM000095
019040     02  FILLER  PICTURE  XXX    VALUE SPACE.                        CM000095
019050     02  LDD2    PICTURE  99.                                       CM000095
019060     02  FILLER  PICTURE  XX     VALUE SPACE.                        CM000095
019070     02  LDD3    PICTURE  X(9).                                     CM000095
019080     02  FILLER  PICTURE  XX     VALUE SPACE.                        CM000095
019090     02  LDD4    PICTURE  XXX.                                      CM000095
019100     02  FILLER  PICTURE  XX     VALUE SPACE.                        CM000095
019110     02  LDD5    PICTURE  XX.                                       CM000095
019120     02  FILLER1 PICTURE  XX     VALUE SPACE.                        CM000095
019130     02  LDD6    PICTURE  X(9).                                     CM000095
019140     02  FILLER  PICTURE  XX     VALUE SPACE.                        CM000095
019150     02  LDD7    PICTURE  XX.                                       CM000095
019160     02  FILLER2 PICTURE  XX     VALUE SPACE.                        CM000095
019170     02  LDD8    PICTURE  X(9).                                     CM000095
019180     02  FILLER  PICTURE  XX     VALUE SPACE.                        CM000095
019190     02  LDD9    PICTURE  XX.                                       CM000095
019200     02  FILLER3 PICTURE  XX     VALUE SPACE.                        CM000095
019210     02  LDD10   PICTURE  X(9).                                     CM000095
019220     02  FILLER  PICTURE  XX     VALUE SPACE.                        CM000095
019230     02  LDD11   PICTURE  XX.                                       CM000095
019240     02  FILLER4 PICTURE  XX     VALUE SPACE.                        CM000095
019250     02  LDD12   PICTURE  X(9).                                     CM000095
020010     02  FILLER  PICTURE  XX     VALUE SPACE.                        CM000095
020020     02  LDD13   PICTURE  XX.                                       CM000095
020030     02  FILLER5 PICTURE  XX     VALUE SPACE.                        CM000095
020040     02  LDD14   PICTURE  X(9).                                     CM000095
```

```
4

020050      02  FILLER  PICTURE  XX     VALUE SPACE.                    CM000095
020060      02  LOD15   PICTURE  X(10).                                 CM000095
020070      02  FILLER  PICTURE  XX     VALUE SPACE.                    CM000095
020080      02  LDD16   PICTURE  X(14).                                 CM000095
020090      02  FILLER  PICTURE  XXX    VALUE SPACE.                    CM000095
          01  SVTOP3
              02  FILLER  PICTURE X  VALUE SPACE.
              02  FILLER  PICTURE X(25) VALUE 'NO RANGE PORT 01   PORT 0'.
              02  FILLER  PICTURE X(25) VALUE '2   PORT 03   PORT 04   P'.
              02  FILLER  PICTURE X(25) VALUE 'ORT 05   PORT 06   PORT 0'.
              02  FILLER  PICTURE X(25) VALUE '7   PORT 08   PORT 09   P'.
              02  FILLER  PICTURE X(26) VALUE 'ORT 10   PORT 11   PORT 12'.
              02  FILLER  PICTURE X(5)  VALUE SPACE.
          01  SVTOP1.
              02  FILLER  PICTURE X(36) VALUE SPACE.
              02  FILLER  PICTURE X(25) VALUE 'SCANNER VALVE ASSIGNMENTS'.
              02  FILLER  PICTURE X(33) VALUE SPACE.
              02  FILLER  PICTURE X(11) VALUE 'SHEET    OF'.
              02  FILLER  PICTURE X(27) VALUE SPACE.
          01  SVTOP2.
              02  FILLER  PICTURE X  VALUE SPACE.
              02  FILLER  PICTURE X(12) VALUE 'SV OUCER    '.
              02  FILLER  PICTURE X(119)  VALUE SPACE.
          01  SVLINE.
              02  FILLER  PICTURE X  VALUE SPACE.
              02  SVNO    PICTURE  99.
              02  FILLER  PICTURE X(17) VALUE '      VAC REF   '.
              02  PORT2   PICTURE X(10).
              02  PORT3   PICTURE X(10).
              02  PORT4   PICTURE X(10).
              02  PORT5   PICTURE X(10).
              02  PORT6   PICTURE X(10).
              02  PORT7   PICTURE X(10).
              02  PORT8   PICTURE X(10).
              02  PORT9   PICTURE X(10).
              02  PORT10  PICTURE X(10).
              02  PORT11  PICTURE X(10).
              02  PORT12  PICTURE X(10).
              02  FILLER  PICTURE  XX  VALUE SPACE.
022080 01   HEAOMCDO.                                                   CM000095
022090      02  MCDD    PICTURE  X(12)  VALUE '    SCAN    '.           CM000095
022100      02  FILLER  PICTURE  X(113) VALUE 'PARAMETER UNIT CODE   LOADCM000095
022110-     '    CODE   LOAO    CODE   LOAD   CODE   LOAD   CODE   LOADCM000095
022120-     '     REFERENCE      REMARKS'.                              CM000095
022130      02  FILLER  PICTURE  X(7)   VALUE SPACE.                    CM000095
023010 01   DOAS-HO.
023020      02  FILLER  PICTURE  X(48)  VALUE SPACE.
023030      02  FILLER  PICTURE X(31)   VALUE 'DIGITAL DATA ACQUISITION S
023040-     'YSTEM'.
023050      02  FILLER  PICTURE  X(32)  VALUE SPACE.
023060      02  FILLER  PICTURE  X(14)   VALUE 'SHEET    OF  R'.
023070      02  FILLER  PICTURE  X(7)    VALUE SPACE.
023180 01   MC-HD.
023190      02  FILLER  PICTURE  X(53)  VALUE SPACE.
023200      02  FIXR    PICTURE  X(32)  VALUE 'MICROSAO(C DATA REDUCT(ON
023210-     '      '.
023220      02  FILLER  PICTURE  X(26)  VALUE SPACE.
```

5

```
023230      02  FILLER  PICTURE  X(14)  VALUE 'SHEET    OF  R'.
023240      02  FILLER  PICTURE  X(7)   VALUE SPACE.
024010 01  DUM-HEAD.
024020      02  SCF     PICTURE  X(32)  VALUE 'SCANNER VALVE DATA REDUCTI
024030-     'ON    '.
030010 PROCEDURE DIVISION.                                                CM000095
030021      OPEN OUTPUT LIST.
030100      OPEN INPUT HOOK.                                              CM000095
030110      OPEN INPUT DCARD.
030130      PERFORM SPACE-TB.                                             CM000095
031010 RD-HK.                                                             CM000095
031020      READ HOOK AT END GO TO HK-END.                                CM000095
031070      IF HR1 = 'S' AND HR2 = '0' OR '1' OR '2' OR '3' OR '4' OR     CM000095
031080      '5' OR '6' OR '7' OR '8' OR '9' GO TO SV-ROUTE.               CM000095
031090      IF HR12 = '00' GO TO MN6.                                     CM000095
031110      GO TO RD-HK.                                                  CM000095
032200 MN6.                                                               CM000095
            ADD 1 RHR45 GIVING K.
            IF HHR3 NOT = 0
            MOVE HPAR TO 003 (HHR3,K).
032201      CLOSE DCARD.
032210      OPEN INPUT DCARD.                                             CM000095
032220 MN6A.                                                              CM000095
032230      READ DCARD AT END GO TO MN1Z.                                 CM000095
032240      IF DR1 NOT = HPAR GO TO MN6A.                                 CM000095
032250      IF DR7 = '  ' GO TO MN1Z.                                     CM000095
033020      GO TO DD-ROUTE.                                               CM000095
033110 MN1Z.                                                              CM000095
033120      DISPLAY 'DATA RED. N/A '.
033140      GO TO RD-HK.                                                  CM000095
049010 SV-ROUTE.                                                          CM000095
049020      IF HRD23 > 60 DISPLAY '4902' HRDOUT  GO TO RD-HK.             CM000095
049030      MOVE HRD23 TO J.                                              CM000095
049040      IF RHR45 > 12 DISPLAY '4904' HRDOUT  GO TO RD-HK.             CM000095
            MOVE RHR45 TO K.
049050      MOVE HPAR TO SV3 (J, K)                                       CM000095
049060      GO TO RD-HK.                                                  CM000095
050010 DD-ROUTE.                                                          CM000095
050011      IF HHR3 = 0 GO TO RD-HK.
050020      IF HHR3 < 8 MOVE HHR3 TO J
050030          ELSE DISPLAY '5003' HRDOUT  GO TO RD-HK.                  CM000095
050040      IF RHR45 > 63 DISPLAY '5004' HRDOUT GO TO RD-HK.
050050      ADD 1 RHR45 GIVING K.
050070      IF  RR7B = '0' OR '1' OR '2' OR '3' OR '4' OR '5' OR '6'      CM000095
050080          OR '7' OR '8' OR '9' GO TO DDR1.                          CM000095
050090      GO TO DDR3.                                                   CM000095
050100 DDR1.                                                              CM000095
050110      IF  RR7C = '0' OR '1' OR '2' OR '3' OR '4' OR '5' OR '6'      CM000095
050120          OR '7' OR '8' OR '9' GO TO DDR2.                          CM000095
050130 DDR3.                                                              CM000095
050140      IF DR7 = 'IPC' MOVE 'IN PLACE CALS' TO 0016 (J, K)            CM000095
050150          GO TO DDR9.                                               CM000095
050160      IF DR7 = 'SPC' MOVE 'SPECIAL CALS' TO 0016 (J, K)             CM000095
050170          GO TO DDR9.                                               CM000095
050180      IF RR7B = 'R' AND RR7C = 'N' GO TO DDR4.                      CM000095
050190      DISPLAY '5019' DR7  GO TO RD-HK.                              CM000095
050200 DDR4.                                                              CM000095
```

6

```
00283   050210      OPEN INPUT CFILE.                                   CM000095
00284   050220 DOR5.                                                    CM000095
00285   050230      READ CFILE AT END GO TO OOCEND.                     CM000095
00286   050240      IF C9 NOT = '0' GO TO DOR5.
00287   050250      IF HPAR NOT = C5 GO TO DDR5.                        CM000095
00288   051010      IF  RR7A = '+'                                      CM000095
00289   051020          MOVE '26' TO 005 (J, K)                         CM000095
00290   051030          MOVE '27' TO DD7 (J, K)                         CM000095
00291   051040          MOVE '28' TO 009 (J, K)                         CM000095
00292   051050          MOVE '29' TO 0011 (J, K)                        CM000095
00293   051060          MOVE '30' TO DD13 (J, K)                        CM000095
00294   051070          GO TO 00R6.                                     CM000095
00295   051080      IF  RR7A = '-'                                      CM000095
00296   051090          MOVE '26' TO 005 (J, K)                         CM000095
00297   051100          MOVE '25' TO D07 (J, K)                         CM000095
00298   051110          MOVE '24' TO 009 (J, K)                         CM000095
00299   051120          MOVE '23' TO 0011 (J, K)                        CM000095
00300   051130          MOVE '22' TO DD13 (J, K)                        CM000095
00301   051140          MOVE 1 TO NEG-SW                                CM000095
00302   051150          GO TO 00R6.                                     CM000095
00303   051160      DISPLAY '5116' OR7  GO TO ODCEND.                   CM000095
00304   051170 DOR6.                                                    CM000095
00305   051180      IF C10 = SPACE GO TO 00R7.                          CM000095
00306   051190      MOVE C10 TO D06 (J, K)                              CM000095
00307   051200      READ CFILE AT END GO TO ODCEND.                     CM000095
00308   051210      MOVE C10 TO 008 (J, K)                              CM000095
00309   051220      READ CFILE AT END GO TO DDCEND.                     CM000095
00310   051230      MOVE C10 TO DD10 (J, K)                             CM000095
00311   051240      READ CFILE AT END GO TO ODCEND.                     CM000095
00312   051250      MOVE C10 TO DD12 (J, K)                             CM000095
00313   052010      READ CFILE AT END GO TO OOCEND.                     CM000095
00314   052020      MOVE C10 TO 0014 (J, K)                             CM000095
00315   052030      GO TO ODR8.                                         CM000095
00316   052040 ODR7.                                                    CM000095
00317   052050      IF C11 = SPACE DISPLAY '5205' C7 GO TO DDCEND.      CM000095
00318   052060      MOVE C11 TO DD6 (J, K).                             CM000095
00319   052070      READ CFILE AT END GO TO DOCEND.                     CM000095
00320   052080      MOVE C11 TO 008 (J, K).                             CM000095
00321   052090      READ CFILE AT END GO TO OOCEND.                     CM000095
00322   052100      MOVE C11 TO 0010 (J, K).                            CM000095
00323   052110      READ CFILE AT END GO TO OOCEND.                     CM000095
00324   052120      MOVE C11 TO DD12 (J, K).                            CM000095
00325   052130      READ CFILE AT END GO TO OOCEND.                     CM000095
00326   052140      MOVE C11 TO 0014 (J, K).                            CM000095
00327   052150 OOR8.                                                    CM000095
00328   052160      MOVE C11B TO DD4 (J, K).                            CM000095
00329   053110      CLOSE CFILE.                                        CM000095
00330 **052170 OOR9.                                                    CM000095
00331   052180      IF NEG-SW = 1  MOVE 0 TO NEG-SW                     CM000095
00332   052190          MOVE '-' TO OOSN (J, K).                        CM000095
00333   053010      IF DR6 = 'CP' MOVE 'CELL PRESS' TO DD15 (J, K) GO TO DORX.  CM000095
00334   053020      IF OR6 = 'BA' MOVE 'BAROMETER ' TO 0015 (J, K) GO TO DORX.  CM000095
00335   053030      IF OR6 = 'VR' MOVE 'VAC. REF. ' TO DD15 (J, K) GO TO DDRX.  CM000095
00336   053040      IF DR6 = 'RT' MOVE 'RTT       ' TO 0D15 (J, K) GO TO OORX.  CM000095
00337   053050      IF DR6 = 'CA' MOVE 'CA-1500-F ' TO 0015 (J, K) GO TO OORX.  CM000095
00338   053060      IF DR6 = 'CC' MOVE 'CC-1500-F ' TO DD15 (J, K) GO TO DORX.  CM000095
00339   053070      IF OR6 = 'IC' MOVE 'IC-1500-F ' TO DD15 (J, K) GO TO DORX.  CM000095
```

```
00340   053080      IF OR6 = 'EV' MOVE 'EVENT    ' TO DD15 (J, K).          CM000095
00341   053090 DDRX.                                                        CM000095
00342   053100      MOVE HPAR TO DD3 (J, K)                                 CM000095
00343   053120      GO TO RD-HK.                                            CM000095
00344   053130 00CEND.                                                      CM000095
00345   053140      DISPLAY '5314'                                          CM000095
00346   053150      CLOSE CFILE                                             CM000095
00347   053160      GO TD RD-HK,                                            CM000095
00348   054010 DDR2.                                                        CM000095
00349   054020      IF RDR7B = 08 GD TO ODR2A.                              CM000095
00350   054030      IF RDR7B = 16 GQ TO ODR2B.                              CM000095
00351   054040      IF RDR7B = 24 GO TO DDR2C.                              CM000095
00352   054050      IF RDR7B = 32 GD TD 00R20.                              CM000095
00353   054060      IF RDR7B = 40 GO TO ODR2E.                              CM000095
00354   054070      IF RDR7B = 80 GO TO DDR2F.                              CM000095
00355   054080 DDR2Z.                                                       CM000095
00356   054090      DISPLAY '5409' DR7 GO TO RD-HK.                         CM000095
00357   054100 DDR2A.                                                       CM000095
00358   054110      IF RR7A = '+'                                           CM000095
00359   054120          MOVE ' 2' TO 005 (J, K)                             CM000095
00360   054130          MOVE '0 MV' TO DD6 (J, K)                           CM000095
00361   054140          MOVE ' 3' TO DD7 (J, K)                             CM000095
00362   054150          MOVE '8 MV' TO DD8 (J, K)                           CM000095
00363   054160          GO TO DDR20.                                        CM000095
00364   054170      IF RR7A = '-'                                           CM000095
00365   054180          MOVE ' 2' TO 005 (J, K)                             CM000095
00366   054190          MOVE '0 MV' TO DD6 (J, K)                           CM000095
00367   054200          MOVE ' 1' TO DD7 (J, K)                             CM000095
00368   054210          MOVE '-8 MV' TO DD8 (J, K)                          CM000095
00369   054220          GO TO DDR20.                                        CM000095
00370   054230      GO TO DDR2Z.                                            CM000095
00371   055010 DDR2B.                                                       CM000095
00372   055020      IF RR7A = '+'                                           CM000095
00373   055030          MOVE ' 5' TD DD5 (J, K)                             CM000095
00374   055040          MOVE '0 MV' TD DD6 (J, K)                           CM000095
00375   055050          MOVE ' 6' TO DD7 (J, K)                             CM000095
00376   055060          MOVE ' 16 MV' TO DD8 (J, K)                         CM000095
00377   055070          GO TO DDR20.                                        CM000095
00378   055080      IF RR7A = '-'                                           CM000095
00379   055090          MOVE ' 5' TO DD5 (J, K)                             CM000095
00380   055100          MOVE '0 MV' TD 006 (J, K)                           CM000095
00381   055110          MOVE ' 4' TO DD7 (J, K)                             CM000095
00382   055120          MOVE '-16 MV' TO DD8 (J, K)                         CM000095
00383   055130          GO TD DDR20.                                        CM000095
00384   055140      GO TO DDR2Z.                                            CM000095
00385   055150 DDR2C.                                                       CM000095
00386   055160      IF RR7A = '+'                                           CM000095
00387   055170          MOVE ' 8' TO DD5 (J, K)                             CM000095
00388   055180          MOVE '0 MV' TO D06 (J, K)                           CM000095
00389   055190          MOVE ' 9' TO 007 (J, K)                             CM000095
00390   055200          MOVE '24 MV' TO DD8 (J, K)                          CM000095
00391   055210          GO TO DDR20.                                        CM000095
00392   055220      IF RR7A = '-'                                           CM000095
00393   055230          MOVE ' 8' TO DD5 (J, K)                             CM000095
00394   055240          MOVE '0 MV' TO DD6 (J, K)                           CM000095
00395   055250          MOVE ' 7' TO DD7 (J, K)                             CM000095
00396   056010          MOVE '-24 MV' TO DD8 (J, K)                         CM000095
```

8

```
056020          GO TO DOR20.                                                CM000095
056030      GO TO OOR2Z.                                                    CM000095
056040 DDR20.                                                               CM000095
056050      IF RR7A = '+'                                                   CM000095
056060          MOVE '11' TO 005 (J, K)                                     CM000095
056070          MOVE '0 MV'    TO 006 (J, K)
056080          MOVE '12' TO 007 (J, K)                                     CM000095
056090          MOVE '32 MV' TO 008 (J, K)                                  CM000095
056100          GO TO OOR20.                                                CM000095
056110      IF RR7A = '-'                                                   CM000095
056120          MOVE '11' TO 005 (J, K)                                     CM000095
056130          MOVE '0 MV' TO 006 (J, K)                                   CM000095
056140          MOVE '10' TO 007 (J, K)                                     CM000095
056150          MOVE '-32 MV' TO 008 (J, K)                                 CM000095
056160          GO TO OOR20.                                                CM000095
056170      GO TO OOR2Z.                                                    CM000095
056180 OOR2E.                                                               CM000095
056190      IF RR7A = '+'                                                   CM000095
056200          MOVE '14' TO 005 (J, K)                                     CM000095
056210          MOVE '0 MV' TO 006 (J, K)                                   CM000095
056220          MOVE '15' TO 007 (J, K)                                     CM000095
056230          MOVE '40 MV' TO 008 (J, K)                                  CM000095
056240          GO TO OOR20.                                                CM000095
057010      IF RR7A = '-'                                                   CM000095
057020          MOVE '14'  TO 005 (J, K)
057030          MOVE '0 MV' TO 006 (J, K)                                   CM000095
057040          MOVE '13' TO 005 (J, K)                                     CM000095
057050          MOVE '-40 MV' TO 008 (J, K)                                 CM000095
057060          GO TO OOR20.                                                CM000095
057070      GO TO ODR2Z.                                                    CM000095
057080 OOR2F.                                                               CM000095
057090      IF RR7A = '+'                                                   CM000095
057100          MOVE '17' TO 005 (J, K)                                     CM000095
057110          MOVE '0 MV' TO 006 (J, K)                                   CM000095
057120          MOVE '18' TO 007 (J, K)                                     CM000095
057130          MOVE '80 MV' TO 008 (J, K)                                  CM000095
057140          GO TO OOR20.                                                CM000095
057150      IF RR7A = '-'                                                   CM000095
057160          MOVE '17' TO 005 (J, K)                                     CM000095
057170          MOVE '0 MV' TO 006 (J, K)                                   CM000095
057180          MOVE '16' TO 007 (J, K)                                     CM000095
057190          MOVE '-80 MV' TO 008 (J, K)                                 CM000095
057200          GO TO OOR20.                                                CM000095
057210      GO TO DDR2Z.                                                    CM000095
057220 DOR20.                                                               CM000095
057230      MOVE 'MV CALS' TO 0016 (J, K).                                  CM000095
057240      GO TO OOR9.                                                     CM000095
062010 HK-END.                                                              CM000095
062020      CLOSE HOOK.                                                     CM000095
069010 WR-DO.                                                               CM000095
069020      MOVE 1 TO J.  MOVE '  MUX CHAN  ' TO MCOO. MOVE 25 TO JECT.     CM000095
069040      PERFORM WRD01 VARYING J FROM 1 BY 1 UNTIL J = 8 AFTER K FROM
069050       1 BY 1 UNTIL K > 64.
069060      MOVE 24 TO JECT.                                                CM000095
069070      GO TO WR-SR.                                                    CM000095
069100 WRD01.                                                               CM000095
069110      SUBTRACT 1 FROM K GIVING L002.
```

9

```
00454   069120      MOVE J TO L001.
00455   069150      MOVE 003 (J, K) TO LDD3.                                CM000095
00456   069160      MOVE DD4 (J, K) TO L004.                                CM000095
00457   069170      MOVE DD5 (J, K) TO LDD5.                                CM000095
00458   069180      MOVE DD6 (J, K) TO LDD6.                                CM000095
00459   069190      MOVE 007 (J, K) TO L007.                                CM000095
00460   069200      MOVE DD8 (J, K) TO LDD8.                                CM000095
00461   069210      MOVE DD9 (J, K) TO LDD9.                                CM000095
00462   069220      MOVE 0010 (J, K) TO LDD10                               CM000095
00463   069230      MOVE DD11 (J, K) TO LD011                               CM000095
00464   069240      MOVE DD12 (J, K) TO LD012                               CM000095
00465   069250      MOVE DD13 (J, K) TO LDD13                               CM000095
00466   070010      MOVE DD14 (J, K) TO LDD14.                              CM000095
00467   070020      MOVE DD15 (J, K) TO LD015.                              CM000095
00468   070030      MOVE D016 (J, K) TO LD016.                              CM000095
00469   070040      IF DOSN (J, K) = '-'  MOVE '-' TO FILLER1 FILLER2 FILLER3   CM000095
00470   070050          FILLER4 FILLER5  ELSE  MOVE SPACE TO FILLER1 FILLER2    CM000095
00471   070060          FILLER3 FILLER4 FILLER5.                            CM000095
00472   070070      IF K = 1 OR JECT = 25
00473   070071          WRITE LIT FROM DDAS-HD AFTER 0
00474   070080          WRITE LIT FROM HEADMCDD AFTER 2
00475   070090          MOVE 0 TO JECT.                                     CM000095
00476   070100      ADD 1 TO JECT.                                          CM000095
00477   070110      WRITE LIT FROM DDLIST AFTER 2.                          CM000095
00478   073010 SPACE-TB.                                                    CM000095
00479   073110      PERFORM SPC-DO VARYING K FROM 1 BY 1 UNTIL K > 64 AFTER CM000095
00480   073120          J FROM 1 BY 1 UNTIL J > 7.
00481 **073090      PERFORM SPC-SV VARYING K FROM 1 BY 1 UNTIL K > 12 AFTER CM000095
00482   073100          J FROM 1 BY 1 UNTIL J > 60.                         CM000095
00483   074180 SPC-SV.                                                      CM000095
00484   074190      MOVE SPACE TO SV3 (J, K).                               CM000095
00485   074200 SPC-DO.                                                      CM000095
00486   074210      MOVE SPACE TO DD1 (J, K), DD2 (J, K), DD3 (J, K) DD4 (J, K)  CM000095
00487   074220          DD5 (J, K)  DD6 (J, K)  DD7 (J, K)  DD8 (J, K)      CM000095
00488   074230          DD9 (J, K)  DD10 (J, K) DD11 (J, K) DD12 (J, K)     CM000095
00489   074240          DD13 (J, K) DD14 (J, K) DD15 (J, K) DD16 (J, K)     CM000095
00490   074250          DDSN (J, K).                                        CM000095
00491 **071010 WR-SR.                                                       CM000095
00492 **065240      MOVE 24 TO JECT.                                        CM000095
00493   065250      MOVE SCF TO FIXR.
00494   069010 WR-SV.                                                       CM000095
00495               PERFORM WRSV1 VARYING J FROM 1 BY 1 UNTIL J > 60.
00496 **066240      GO TO WR-ALL.                                           CM000095
00497   069060 WRSV1.                                                       CM000095
00498               IF J = 1 PERFORM SVTOP.
00499               IF J = 21 PERFORM SVTOP.
00500               IF J = 41 PERFORM SVTOP.
00501               MOVE J TO SVNO.
00502               MOVE SV3 (J, 2) TO PORT2.
00503               MOVE SV3 (J, 3) TO PORT3.
00504               MOVE SV3 (J, 4) TO PORT4.
00505               MOVE SV3 (J, 5) TO PORT5.
00506               MOVE SV3 (J, 6) TO PORT6.
00507               MOVE SV3 (J, 7) TO PORT7.
00508               MOVE SV3 (J, 8) TO PORT8.
00509               MOVE SV3 (J, 9) TO PORT9.
00510               MOVE SV3 (J, 10) TO PORT10.
```

10

```
00511                MOVE SV3 (J, 11) TO PORT11.
00512                MOVE SV3 (J, 12) TO PORT12.
00513                WRITE LIT FROM SVLINE AFTER 2.
00514            SVTOP.
00515                WRITE LIT FROM SVTOP1 AFTER 0.
00516                WRITE LIT FROM SVTOP2 AFTER 3.
00517                WRITE LIT FROM SVTOP3 AFTER 1.
00518 **067230 WR-ALL.                                                  CM000095
00519   072040       CLOSE LIST.                                        CM000095
00520   072050       CLOSE DCARD.
00521   072060       STOP RUN.                                          CM000095
```

```
00001   001010 IDENTIFICATION DIVISION.                                    CM000049
00002   001020 PROGRAM-ID. 'CM000049'.                                     CM000049
00003   001030 AUTHOR.  JACK ROSE.                                         CM000049
00004   001040 INSTALLATION.   ARD INC  TULLAHOMA TENN.                    CM000049
00005   001050 DATE-WRITTEN. SEPT  1967.                                   CM000049
00006   001060 DATE-COMPILED. DEC  3,1969                                  CM000049
00007   001070 SECURITY.                                                   CM000049
00008   001080 REMARKS.     THIS PROGRAM PRODUCES   A   TRANSDUCER FILE    CM000049
00009   001090              TO BE USED BY RTF INSTRUMENT PROGRAM.          CM000049
00010   001100 ENVIRONMENT DIVISION.                                       CM000049
00011   001110 CONFIGURATION SECTION.                                      CM000049
00012   001120 SOURCE-COMPUTER. IBM-360 H50.                               CM000049
00013   001130 OBJECT-COMPUTER. IBM-360 H50.                               CM000049
00014   001140 INPUT-OUTPUT SECTION.                                       CM000049
00015   001150 FILE-CONTROL.                                               CM000049
00016   001160     SELECT GILMORE  ASSIGN 'G001' UTILITY.                  CM000049
00017   001170     SELECT  C-FILE  ASSIGN  'C001' UTILITY.                 CM000049
00018   001180 DATA DIVISION.                                              CM000049
00019   001190 FILE SECTION.                                               CM000049
00020   001200 FD  GILMORE  RECORDING F  BLOCK 1 RECORDS     RECORD 747    CM000049
00021   001210              LABEL RECORDS STANDARD     DATA RECORD  GILM.  CM000049
00022   002010 01  GILM.                                                   CM000049
00023   002020     02  FILLER      PICTURE  X(10).                         CM000049
00024   002030     02  INS-NO      PICTURE  X(16).                         CM000049
00025   002031     02  RINS-NO  REDEFINES INS-NO.
00026   002032         03  FILLER   PICTURE  X.
00027   002033         03  INS-NN  PICTURE  X(15).
00028   002040     02  FILLER      PICTURE  X(6).                          CM000049
00029   002050     02  MFGR        PICTURE  X(12).                         CM000049
00030   002060     02  MATE        PICTURE  X(20).                         CM000049
00031   002070     02  RANGE.
00032   002071         03  RG1     PICTURE  X.
00033   002072         03  RG2     PICTURE  X.
00034   002073         03  RG3     PICTURE  X.
00035   002074         03  RG4     PICTURE  X.
00036   002075         03  RG5     PICTURE  X.
00037   002080     02  RANGE-UNIT  PICTURE  X(12).                         CM000049
00038   002090     02  PIC         PICTURE  X.                             CM000049
00039   002100     02  FILLER      PICTURE  X(13).                         CM000049
00040   002110     02  NIC         PICTURE  X.                             CM000049
00041   002120     02  FILLER      PICTURE  X(11).                         CM000049
00042   002130     02  POC         PICTURE  X.                             CM000049
00043   002140     02  FILLER      PICTURE  X.                             CM000049
00044   002150     02  FACILITY    PICTURE  XXXX.                          CM000049
00045   002160     02  NOC         PICTURE  X.                             CM000049
00046   002170     02  FILLER      PICTURE  X(16).                         CM000049
00047   002180     02  DATE-CAL.                                           CM000049
00048   002181         03  DCMD    PICTURE  99.                            CM000049
00049   002182         03  DCDY    PICTURE  99.                            CM000049
00050   002183         03  DCYR    PICTURE  99.                            CM000049
00051   002184     02  RDATE REDEFINES DATE-CAL PICTURE X(6).              CM000049
00052   002190     02  EXCITATION  PICTURE  S99V99.                        CM000049
00053   002200     02  FILLER      PICTURE  X(299).                        CM000049
00054   002210     02  R-CAL-TYPE  PICTURE  XXX.                           CM000049
```

2

```
00055  002220     02  FILLER      PICTURE  X(53).                                CM000049
00056  002230     02  CORR-P-UN   PICTURE  X.                                     CM000049
00057  003010     02  RN0.                                                        CM000049
00058  003020         03  RN0-MVV     PICTURE   S9(5)V9.                         CM000049
00059  003030         03  RN0-FS      PICTURE   S9(7)V999.                       CM000049
00060  003040         03  RN0-PSI     PICTURE   S9(5)V99.                        CM000049
00061  003050     02  RN1.                                                        CM000049
00062  003060         03  RN1-RES     PICTURE   S9(5)V999.                       CM000049
00063  003070         03  RN1-MVV     PICTURE   S9(5)V999.                       CM000049
00064  003080         03  RN1-FS      PICTURE   S9(5)V99.                        CM000049
00065  003090         03  RN1-PSI     PICTURE   S9(6)V999.
00066  003100     02  RN2.                                                        CM000049
00067  003110         03  RN2-RES     PICTURE   S9(5)V999.                       CM000049
00068  003120         03  RN2-MVV     PICTURE   S9(5)V999.                       CM000049
00069  003130         03  RN2-FS      PICTURE   S9(5)V99.                        CM000049
00070  003140         03  RN2-PSI     PICTURE   S9(6)V999.                       CM000049
00071  003150     02  RN3.                                                        CM000049
00072  003160         03  RN3-RES     PICTURE   S9(5)V999.                       CM000049
00073  003170         03  RN3-MVV     PICTURE   S9(5)V999.                       CM000049
00074  003180         03  RN3-FS      PICTURE   S9(5)V99.                        CM000049
00075  003190         03  RN3-PSI     PICTURE   S9(6)V999.                       CM000049
00076  003200     02  RN4.                                                        CM000049
00077  003210         03  RN4-RES     PICTURE   S9(5)V999.                       CM000049
00078  003220         03  RN4-MVV     PICTURE   S9(5)V999.                       CM000049
00079  003230         03  RN4-FS      PICTURE   S9(5)V99.                        CM000049
00080  003240         03  RN4-PSI     PICTURE   S9(6)V999.                       CM000049
00081  004010     02  RN00-MV        PICTURE   S9(5)V9.                         CM000049
00082  004020     02  RN00-FS        PICTURE   S9(7)V999.                       CM000049
00083  004030     02  RN00-PSI       PICTURE   S9(5)V99.                        CM000049
00084  004040     02  FILLER         PICTURE   X(77).
00085  004050 FD  C-FILE      RECORDING F    BLOCK 1  RECORDS    RECORD 80       CM000049
00086  004060                 LABEL RECORDS STANDARD      DATA RECORD CFLL.      CM000049
00087          01  CFLL     PICTURE   X(80).
00088  005001 WORKING-STORAGE SECTION.
00089  005010 77  CNOT     PICTURE  9999   VALUE 0.                               CM000049
00090  005019 01  CHANGE-RANGE.
00091  005020     02  CAT-RNG.
00092  005030         03  CRG1    PICTURE  X.
00093  005040         03  CRG2    PICTURE  X.
00094  005050         03  CRG3    PICTURE  X.
00095  005060         03  CRG4    PICTURE  X.
00096  005070         03  CRG5    PICTURE  X.
00097 **004070 01  CFIL.                                                         CM000049
00098  004080     02  CNO          PICTURE   ZZZZ.                               CM000049
00099  004090     02  CCNT         PICTURE   9.                                  CM000049
00100  004100     02  CTYPCO       PICTURE   X(7).                               CM000049
00101  004110     02  CRANGE       PICTURE   X(7).                               CM000049
00102  004120     02  CRNUNIT      PICTURE   XXX.                                CM000049
00103  004130     02  CRNGCODE     PICTURE   X.                                  CM000049
00104  004140     02  CPARM        PICTURE   X(9).                               CM000049
00105  004150     02  CMFG         PICTURE   X(9).                               CM000049
00106  004160     02  CARONO       PICTURE   X(6).                               CM000049
00107  004170     02  CAROCD       PICTURE   X.                                  CM000049
00108  004180     02  CUDC         PICTURE   X(4).                               CM000049
00109  004190     02  CRN          PICTURE   X.                                  CM000049
00110  004200     02  CPOSRN       PICTURE   X(9).
00111  004201     02  RCPOSRN   REDEFINES CPOSRN   PICTURE  -9999.999.
```

3

```
00112   004220      02  CNEGRN       PICTURE   X(9).                          CM000049
00113 **004210      02  CPEQ         PICTURE   XXX.                           CM000049
00114   004240      02  RECAL        PICTURE   X(6).                          CM000049
00115   006010 PROCEDURE DIVISION.                                             CM000049
00116   006020      OPEN INPUT GILMORE  OUTPUT C-FILE.                         CM000049
00117   006030      PERFORM P9.                                                CM000049
00118   006040      MOVE SPACE TO CARDNO.
00119   006050 READ-GIL.                                                       CM000049
00120   006060      READ GILMORE AT END GO TO G-EOF.                           CM000049
00121   006061      IF FACILITY = 'RN00' OR FACILITY = 'RN10' NEXT SENTENCE
00122   006062      ELSE GO TO READ-GIL.
00123   006069      MOVE SPACE TO CAT-RNG.
00124   006070      IF RG1 = SPACE
00125   006071      IF RG2 = SPACE
00126   006072      IF RG3 = SPACE
00127   006073      IF RG4 = SPACE
00128   006074      IF RG5 = SPACE
00129   006075      MOVE RANGE TO CAT-RNG
00130   006076      ELSE MOVE RG5 TO CAT-RNG
00131   006077      ELSE MOVE RG4 TO CRG1 MOVE RG5 TO CRG2
00132   006078      ELSE MOVE RG3 TO CRG1 MOVE RG4 TO CRG2  MOVE RG5 TO CRG3
00133   006079      ELSE MOVE RG2 TO CRG1 MOVE RG3 TO CRG2 MOVE RG4 TO CRG3
00134   006080      MOVE RG5 TO CRG4
00135   006081      ELSE MOVE RANGE TO CAT-RNG.
00136   006082      MOVE CAT-RNG TO CRANGE.
00137   006090      MOVE MFGR  TO CMFG.                                        CM000049
00138   006100      MOVE INS-NN TO CARDNO.
00139   006110      IF EXCITATION = 10.00 AND R-CAL-TYPE = 'O  '               CM000049
00140   006120      MOVE 'OS  ' TO CUOC   GO TO P8.                            CM000049
00141   006130      IF EXCITATION =  5.00 AND R-CAL-TYPE = 'O  '               CM000049
00142   006140      MOVE 'OS2 ' TO CUOC GO TO P8.  MOVE '    ' TO CUOC.        CM000049
00143   006141 P8. IF ROATE = SPACE GO TO P2.                                  CM000049
00144   006150      IF OCMO < 7   ADD 6     OCMO GIVING OCMO
00145   006160      GO TO P2.                                                  CM000049
00146   006170      SUBTRACT 6 FROM OCMO GIVING OCMO                           CM000049
00147   006180      ADD 1    OCYR GIVING OCYR.
00148   006190 P2.                                                             CM000049
00149   006200      MOVE ROATE    TO RECAL.
00150   007010      IF MATE = 'CA3106E-14S-5S-F43  '                           CM000049
00151   007020      AND PIC = 'A'  AND NIC = 'D'  AND POC = 'B' AND NOC = 'C'  CM000049
00152   007030      MOVE 'DUCER-5' TO CTYPCO    GO TO P3.                      CM000049
00153   007040      IF MATE = 'CA3106E-14S-5S-F43  '                           CM000049
00154   007050      AND PIC = 'A'  AND NIC = 'D'  AND POC = 'C'  AND NOC = 'B' CM000049
00155   007060      MOVE 'DUCR-5A' TO CTYPCO    GO TO P3.                      CM000049
00156   007070      IF MATE = 'CA3106E-14S-5S-F43  '                           CM000049
00157   007080      AND PIC = 'D'  AND NIC = 'C'  AND POC = 'A' AND NOC = 'B'  CM000049
00158   007090      MOVE 'DUCR-5B' TO CTYPCO    GO TO P3.                      CM000049
00159   007100      IF MATE = 'PT06A-10-6S(SR)     '                           CM000049
00160   007110      AND PIC = 'A'  AND NIC = 'D' AND POC = 'B'  AND NOC = 'C'  CM000049
00161   007120      MOVE 'DUCER-6' TO CTYPCO    GO TO P3.                      CM000049
00162   007130      IF MATE = 'PT06A-10-6S(SR)     '                           CM000049
00163   007140      AND PIC = 'A'  AND NIC = 'D' AND POC = 'C' AND NOC = 'B'  CM000049
00164   007150      MOVE 'DUCR-6A' TO CTYPCO    GO TO P3.                      CM000049
00165   007160      IF MATE = 'PT06A-10-6S(SR)     '                           CM000049
00166   007170      AND PIC = 'D' AND NIC = 'C' AND POC = 'A' AND NOC = 'B'   CM000049
00167   007180      MOVE 'DUCR-6B' TO CTYPCO    GO TO P3.                      CM000049
00168   007190      IF MATE = 'MS3106B-14S-2S      '                           CM000049
```

4

```
00169   007200      AND PIC = 'A' AND NIC = 'O' AND POC = 'B' AND NOC = 'C'.     CM000049
00170   007210      MOVE 'OUCER-4' TO CTYPCO    GO TO P3.                       CM000049
00171   007220      IF MATE = 'MS3106B-14S-2S        '                          CM000049
00172   007230      AND PIC = 'A' AND NIC = 'O' AND POC = 'C' AND NOC = 'B'      CM000049
00173   007240      MOVE 'OUCR-4A' TO CTYPCO    GO TO P3.                       CM000049
00174   008010      IF MATE = 'MS3106B-14S-2S        '                          CM000049
00175   008020      AND PIC = 'O' AND NIC = 'C' AND POC = 'A' AND NOC = 'B' ..  CM000049
00176   008030      MOVE 'OUCR-4B' TO CTYPCD    GO TO P3.                       CM000049
00177   008040      IF MATE = 'PT06A-8-4S(SR)        '                          CM000049
00178   008050      AND PIC = 'A' AND NIC = 'O' AND POC = 'B' AND NOC = 'C'     CM000049
00179   008060      MOVE 'OUCER40' TO CTYPCO    GO TO P3.                       CM000049
00180   008070      IF MATE = 'PT06A-8-4S(SR)        '                          CM000049
00181   008080      AND PIC = 'A' AND NIC = 'O' AND POC = 'C' AND NOC = 'B'     CM000049
00182   008090      MOVE 'OUCR40A' TO CTYPCO    GO TO P3.                       CM000049
00183   008100      IF MATE = 'PT06A-8-4S(SR)        '                          CM000049
00184   008110      AND PIC = 'O' AND NIC = 'C' AND POC = 'A' AND NOC = 'B'     CM000049
00185 **008110      MOVE 'OUCR40B' TO CTYPCO    GO TO P3.                       CM000049
00186   008120      IF MATE = 'CA3106E-14S-6S-F43  '                            CM000049
00187   008130      AND PIC = 'A' AND NIC = 'O' AND POC = 'B' AND NOC = 'C'     CM000049
00188   008140      MOVE 'OUCER60' TO CTYPCO    GO TO P3.                       CM000049
00189   008150      IF MATE = 'CA3106E-14S-6S-F43  '                            CM000049
00190   008160      AND PIC = 'A' AND NIC = 'O' AND POC = 'C' AND NOC = 'B'     CM000049
00191   008170      MOVE 'OUCR60A' TO CTYPCO    GO TO P3.                       CM000049
00192   008180      IF MATE = 'CA3106E-14S-6S-F43  '                            CM000049
00193   008190      AND PIC = 'O' AND NIC = 'C' AND POC = 'A' AND NOC = 'B'     CM000049
00194   008200      MOVE 'OUCR60B' TO CTYPCO    GO TO P3.                       CM000049
00195   008220      IF MATE = 'PT06E-12-10S(SR)      '                          CM000049
00196   008230      AND PIC = 'A' AND NIC = 'O' AND POC = 'B' AND NOC = 'C'     CM000049
00197   008240      MOVE 'OUCER10' TO CTYPCO    GO TO P3.                       CM000049
00198   009010      IF MATE = 'PT06E-12-10S(SR)      '                          CM000049
00199   009020      AND PIC = 'A' AND NIC = 'O' AND POC = 'C' AND NOC = 'B'     CM000049
00200   009030      MOVE 'OUCR10A' TO CTYPCO    GO TO P3.                       CM000049
00201   009040      IF MATE = 'PT06E-12-10S(SR)      '                          CM000049
00202   009050      AND PIC = 'O' AND NIC = 'C' AND POC = 'A' AND NOC = 'B'     CM000049
00203   009060      MOVE 'OUCR10B' TO CTYPCO    GO TO P3.                       CM000049
00204               IF MATE = 'PC06-12-10S           '
00205               AND PIC = 'A' AND NIC = 'O' AND POC = 'B' AND NOC = 'C'
00206               MOVE 'OUCR10C' TO CTYPCO GO TO P3.
00207               IF MATE = 'PC06-12-10S           '
00208               AND PIC = 'E' AND NIC = 'B' AND POC = 'D' AND NOC = 'A'
00209               MOVE 'OUCR100' TO CTYPCO GO TO P3.
00210   009070      IF MATE = 'PC06W-8-4S            '                          CM000049
00211   009080      AND PIC = 'A' AND NIC = 'O' AND POC = 'B' AND NOC = 'C'     CM000049
00212   009090      MOVE 'OUCER41' TO CTYPCO    GO TO P3.                       CM000049
00213   009100      IF MATE = 'PC06W-8-4S            '                          CM000049
00214   009110      AND PIC = 'A' AND NIC = 'O' AND POC = 'C' AND NOC = 'B'     CM000049
00215   009120      MOVE 'OUCR41A' TO CTYPCD    GO TO P3.                       CM000049
00216   009130      IF MATE = 'PC06W-8-4S            '                          CM000049
00217   009140      AND PIC = 'O' AND NIC = 'C' AND POC = 'A' AND NOC = 'B'     CM000049
00218   009150      MOVE 'OUCR41B' TO CTYPCD    GO TO P3.                       CM000049
00219   009160      MOVE 'NON-STO' TO CTYPCO.                                   CM000049
00220   009170 P3.  IF CORR-P-UN = 'A'  MOVE 'PSA' TO CPEQ.                     CM000049
00221   009180      IF CORR-P-UN = 'G'  MOVE 'PSG' TO CPEQ.                     CM000049
00222   009190      IF CORR-P-UN = 'O'  MOVE 'PSO' TO CPEQ.                     CM000049
00223   009200      IF RANGE-UNIT = ' ABSOLUTE    '  MOVE 'PSA' TO CRNUNIT      CM000049
00224   009201      GO TO P4.                                                   CM000049
00225   009210      IF RANGE-UNIT = ' GAGE        '  MOVE 'PSG' TO CRNUNIT      CM000049
```

5

```
00226   009211      GO TO P4.                                                   CM000049
00227   009220      IF RANGE-UNIT = ' UNIOIR DIFF'  MOVE 'PSO' TO CRNUNIT       CM000049
00228   009221      GO TO P4.                                                   CM000049
00229   009230      IF RANGE-UNIT = ' BIOIR DIFF.'  MOVE 'PSO' TO CRNUNIT       CM000049
00230   009231      GO TO P4.                                                   CM000049
00231   009240      MOVE 'N/A' TO CRNUNIT.                                      CM000049
00232   009250 P4.                                                              CM000049
00233   010030      MOVE 5 TO CCNT.                                             CM000049
00234   010040      MOVE '0' TO CRN.                                            CM000049
00235   010050      MOVE 'N/A' TO CPOSRN.
00236               WRITE CFLL FROM CFIL.
00237               DISPLAY CFIL.
00238   010080 P9.                                                              CM000049
00239   010090      MOVE SPACE TO CTYPCO CRANGE CRNUNIT CRNGCODE CPARM CMFG     CM000049
00240   010100      CAROCO  CUDC  CNEGRN  RECAL.
00241   010101      MOVE 0 TO CNO.
00242   010110 P10.                                                             CM000049
00243   010120      MOVE 4 TO CCNT.                                             CM000049
00244   010130      MOVE '1' TO CRN.                                            CM000049
00245   010160      IF RN1-PSI = 999999.999 MOVE 'N/A      '  TO  CPOSRN        CM000049
00246   010170      ELSE MOVE RN1-PSI TO RCPOSRN.                               CM000049
00247               WRITE CFLL FROM CFIL.
00248               DISPLAY CFIL.
00249   010190      IF RN2-PSI = 999999.999 MOVE 'N/A      '  TO  CPOSRN        CM000049
00250   010200      ELSE MOVE RN2-PSI TO RCPOSRN.                               CM000049
00251   010210      MOVE 3 TO CCNT.                                             CM000049
00252   010220      MOVE '2' TO CRN.                                            CM000049
00253               WRITE CFLL FROM CFIL.
00254               DISPLAY CFIL.
00255   010240      IF RN3-PSI = 999999.999 MOVE 'N/A      '  TO  CPOSRN        CM000049
00256   010250      ELSE MOVE RN3-PSI TO RCPOSRN.                               CM000049
00257   011010      MOVE 2 TO CCNT.                                             CM000049
00258   011020      MOVE '3' TO CRN.                                            CM000049
00259               WRITE CFLL FROM CFIL.
00260               DISPLAY CFIL.
00261   011040      IF RN4-PSI = 999999.999 MOVE 'N/A      '  TO CPOSRN         CM000049
00262   011050      ELSE MOVE RN4-PSI TO RCPOSRN.                               CM000049
00263   011060      MOVE 1 TO CCNT.                                             CM000049
00264   011070      MOVE '4' TO CRN.                                            CM000049
00265               WRITE CFLL FROM CFIL.
00266               DISPLAY CFIL.
00267   011090      PERFORM P9.                                                 CM000049
00268   011100      GO TO READ-GIL.                                             CM000049
00269   011150 G-EOF.                                                           CM000049
00270   011160      CLOSE GILMORE C-FILE.   STOP RUN.                           CM000049
```

```
00001   001010 IDENTIFICATION DIVISION.                                  CM000057
00002   001020 PROGRAM-ID. 'CM000138'.
00003   001030 AUTHOR.  JACK ROSE.                                       CM000057
00004   001040 INSTALLATION.  ARO  INC.                                  CM000057
00005          DATE-WRITTEN.  JULY 1969.
00006   001060 DATE-COMPILED. SEP 16,1969
00007   001070 SECURITY.                                                 CM000057
00008   001090 ENVIRONMENT DIVISION.                                     CM000057
00009   001100 CONFIGURATION SECTION.                                    CM000057
00010   001110   SOURCE-COMPUTER.  IBM-360 H50.                          CM000057
00011   001120   OBJECT-COMPUTER.  IBM-360 H50.                          CM000057
00012   001130 INPUT-OUTPUT SECTION.                                     CM000057
00013   001140   FILE-CONTROL.                                           CM000057
00014   001150     SELECT C-FILE ASSIGN 'CF001' UTILITY.                 CM000057
00015              SELECT OUTFILE ASSIGN 'CFOUT' UTILITY.
00016   001220 DATA DIVISION.                                            CM000057
00017   001230 FILE SECTION.
00018   002010 FD  C-FILE  RECORDING F   BLOCK 1 RECORDS  RECORD 80      CM000057
00019   002020             LABEL RECORDS OMITTED    DATA RECORD C-FIL.   CM000057
00020   002030 01  C-FIL.                                                CM000057
00021   002031     02  CF-TC      PICTURE  X.                            CM000057
00022   002040     02  CF-NO      PICTURE  XXX.                          CM000057
00023   002050     02  CF-CNT     PICTURE  9.                            CM000057
00024   002060     02  CF-TYPCO   PICTURE  X(7).                         CM000057
00025   002070     02  CF-RNG     PICTURE  X(7).                         CM000057
00026   002080     02  CF-RNGU    PICTURE  XXX.                          CM000057
00027   002090     02  CF-RNGCD   PICTURE  X.                            CM000057
00028   002100     02  CF-PARM    PICTURE  X(9).                         CM000057
00029   002110     02  CF-MFG     PICTURE  X(9).                         CM000057
00030   002120     02  CF-INO     PICTURE  X(6).                         CM000057
00031   002130     02  CF-INOCO   PICTURE  X.                            CM000057
00032   002140     02  CF-UOC     PICTURE  X(4).                         CM000057
00033   002150     02  CF-RN      PICTURE  X.                            CM000057
00034   002160     02  CF-POS     PICTURE  X(9).                         CM000057
00035   002170     02  CF-NEG     PICTURE  X(9).                         CM000057
00036   002180     02  CF-EQU     PICTURE  XXX.                          CM000057
00037   002190     02  CF-RCAL    PICTURE  X(6).                         CM000057
00038          FD  OUTFILE
00039                  RECORDING F
00040                  BLOCK 1 RECORDS
00041                  RECORD 87
00042                  LABEL RECORDS STANDARD
00043                  DATA RECORD CFNEW.
00044          01  CFNEW.
00045              02  TC       PICTURE X.
00046              02  NR       PICTURE XXX.
00047              02  CNT      PICTURE 9.
00048              02  TYPCO    PICTURE X(7).
00049              02  RNG      PICTURE X(7).
00050              02  RNGU     PICTURE XXX.
00051              02  RNGCO    PICTURE X.
00052              02  PARM     PICTURE X(9).
00053              02  MFG      PICTURE X(9).
00054              02  INO      PICTURE X(6).
```

2

```
                02  INOCD    PICTURE X.
                02  UDC      PICTURE X(4).
                02  RN       PICTURE X.
                02  POS      PICTURE X(9).
                02  NEG      PICTURE X(9).
                02  EQU      PICTURE XXX.
                02  RCAL     PICTURE X(6).
                02  RSORT    PICTURE X(7).
  007010 WORKING-STORAGE SECTION.                                    CM000057
          77  HOLD-RNG  PICTURE X(7).
          77  HOLD-INO  PICTURE X(6).
  012010 PROCEDURE DIVISION.                                         CM000057
                  OPEN INPUT C-FILE.
                  OPEN OUTPUT OUTFILE.
          1.  READ C-FILE AT END GO TO 99.
              MOVE CF-RNG TO HOLD-RNG.
              MOVE CF-INO TO HOLD-INO.
              PERFORM MOVE-DATA.
          2.  READ C-FILE AT END GO TO 99.
              IF CF-RN NOT = '0' GO TO 2.
              IF CF-INO = HOLD-INO  PERFORM MOVE-DATA  GO TO 2.
              MOVE CF-INO TO HOLD-INO.
              MOVE CF-RNG TO HOLD-RNG.
              PERFORM MOVE-DATA.
              GO TO 2.
          MOVE-DATA.
              MOVE CF-TC TO TC.
              MOVE CF-NO TO NR.
              MOVE CF-CNT TO CNT.
              MOVE CF-TYPCO TO TYPCD.
              MOVE CF-RNG TO RNG.
              MOVE CF-RNGU TO RNGU.
              MOVE CF-RNGCD TO RNGCD.
              MOVE CF-PARM TO PARM
              MOVE CF-MFG TO MFG.
              MOVE HOLD-INO TO INO.
              MOVE CF-INOCD TO INOCD.
              MOVE CF-UOC TO UOC.
              MOVE CF-RN  TO RN.
              MOVE CF-POS TO POS.
              MOVE CF-NEG TO NEG.
              MOVE CF-EQU TO EQU.
              MOVE CF-RCAL TO RCAL.
              MOVE HOLD-RNG TO RSORT.
              WRITE CFNEW.
          99.
              CLOSE C-FILE.
              CLOSE OUTFILE
              STOP RUN.
```

1

```
00001   001010 IDENTIFICATION DIVISION.                                    CM000057
00002   001020 PROGRAM-ID. 'CM000133'.
00003   001030 AUTHOR.  JACK ROSE.                                         CM000057
00004   001040 INSTALLATION.  ARO  INC.                                    CM000057
00005          DATE-WRITTEN.  JULY 1969.
00006   001060 DATE-COMPILED. SEP 17,1969
00007   001070 SECURITY.                                                   CM000057
00008          REMARKS.  THIS PROGRAM LISTS A SORTED RTF TOCR FILE.
00009   001090 ENVIRONMENT DIVISION.                                       CM000057
00010   001100 CONFIGURATION SECTION.                                      CM000057
00011   001110    SOURCE-COMPUTER.   IBM-360 H50.                          CM000057
00012   001120    OBJECT-COMPUTER.   IBM-360 H50.                          CM000057
00013   001130 INPUT-OUTPUT SECTION.                                       CM000057
00014   001140    FILE-CONTROL.                                            CM000057
00015   001150     SELECT C-FILE ASSIGN 'CF001' UTILITY.                   CM000057
00016   001200     SELECT LISTING ASSIGN 'LT001' UTILITY.                  CM000057
00017   001220 DATA DIVISION.                                              CM000057
00018   001230 FILE SECTION.
00019   002010 FD  C-FILE  RECORDING F  BLOCK 1 RECORDS  RECORD 87         CM000057
00020   002020             LABEL RECORDS OMITTED    DATA RECORD C-FIL.     CM000057
00021   002030 01  C-FIL.                                                  CM000057
00022   002031     02  CF-TC      PICTURE  X.                              CM000057
00023   002040     02  CF-NO      PICTURE  XXX.                            CM000057
00024   002050     02  CF-CNT     PICTURE  9.                              CM000057
00025   002060     02  CF-TYPCD   PICTURE  X(7).                           CM000057
00026   002070     02  CF-RNG     PICTURE  X(7).                           CM000057
00027   002080     02  CF-RNGU    PICTURE  XXX.                            CM000057
00028   002090     02  CF-RNGCO   PICTURE  X.                              CM000057
00029   002100     02  CF-PARM    PICTURE  X(9).                           CM000057
00030   002110     02  CF-MFG     PICTURE  X(9).                           CM000057
00031   002120     02  CF-INO     PICTURE  X(6).                           CM000057
00032   002130     02  CF-INOCO   PICTURE  X.                              CM000057
00033   002140     02  CF-UDC     PICTURE  X(4).                           CM000057
00034   002150     02  CF-RN      PICTURE  X.                              CM000057
00035   002160     02  CF-POS     PICTURE  X(9).                           CM000057
00036   002170     02  CF-NEG     PICTURE  X(9).                           CM000057
00037   002180     02  CF-EQU     PICTURE  XXX.                            CM000057
00038   002190     02  CF-RCAL    PICTURE  X(6).                           CM000057
00039              02 CF-JUNK   PICTURE X(7).
00040   006060 FD  LISTING   RECORDING F  BLOCK 12 RECORDS  RECORD 132
00041   006070             LABEL RECORDS OMITTED   DATA RECORD LISTT.      CM000057
00042   006080 01  LIST    PICTURE  X(132).                                CM000057
00043   007010 WORKING-STORAGE SECTION.                                    CM000057
00044   007070 77  SKP     PICTURE X    VALUE '0'.
00045   007080 77  EJCT    PICTURE 99   VALUE 59.                          CM000057
00046   007090 77  OSKP   PICTURE  X   VALUE '0'.
00047   008081 01  DATALN.                                                 CM000057
00048   008082     02  FILLER   PICTURE   X(4) VALUE SPACE.                CM000057
00049   008090     02  LTC     PICTURE X.                                  CM000057
00050   008100     02  FILLER  PICTURE X(4) VALUE SPACE.                   CM000057
00051   008110     02  LTYPCO  PICTURE X(7).                               CM000057
00052   008120     02  FILLER  PICTURE X(4) VALUE SPACE.                   CM000057
00053   008130     02  LRNG    PICTURE X(7).                               CM000057
00054   008140     02  FILLER  PICTURE X(3) VALUE SPACE.                   CM000057
```

2

```
00055   008150      02  LRNGU   PICTURE XXX.                                    CM000057
00056   008160      02  FILLER  PICTURE XXX  VALUE SPACE.                       CM000057
00057   008170      02  LRNGCO  PICTURE X.                                      CM000057
00058   008180      02  FILLER  PICTURE XXX  VALUE SPACE.                       CM000057
00059   008190      02  LPARM   PICTURE X(9).                                   CM000057
00060   008200      02  FILLER  PICTURE XXX  VALUE SPACE.                       CM000057
00061   008210      02  LMFG    PICTURE X(9).                                   CM000057
00062   008220      02  FILLER  PICTURE XXX  VALUE SPACE.                       CM000057
00063   008230      02  LINO    PICTURE X(6).                                   CM000057
00064   008240      02  FILLER  PICTURE XXX  VALUE SPACE.                       CM000057
00065   008250      02  LINOCO  PICTURE X.                                      CM000057
00066   009010      02  FILLER    PICTURE  XXX  VALUE SPACE.                    CM000057
00067   009020      02  LUDC      PICTURE  XXXX.                                CM000057
00068   009030      02  FILLER    PICTURE  XXXX VALUE SPACE.                    CM000057
00069   009040      02  LRN       PICTURE  X.                                   CM000057
00070   009050      02  FILLER    PICTURE  XXXX VALUE SPACE.                    CM000057
00071   009060      02  LPOS      PICTURE  X(9).                                CM000057
00072   009070      02  FILLER    PICTURE  XXX  VALUE SPACE.                    CM000057
00073   009080      02  LNEG      PICTURE  X(9).                                CM000057
00074   009090      02  FILLER    PICTURE  XXX  VALUE SPACE.                    CM000057
00075   009100      02  LEQU      PICTURE  XXX.                                 CM000057
00076   009110      02  FILLER    PICTURE  XXX  VALUE SPACE.                    CM000057
00077   009120      02  LRCAL     PICTURE  X(6).                                CM000057
00078   009130      02  FILLER    PICTURE  X(6) VALUE SPACE.                    CM000057
00079   009180 01   F-PAGE.                                                     CM000057
00080   009190      02  FILLER  PICTURE X(60)  VALUE SPACE.                     CM000057
00081   009200      02  FILLER  PICTURE X(6)   VALUE 'C-FILE'.                  CM000057
00082   009210      02  FILLER  PICTURE X(66)  VALUE SPACE.                     CM000057
00083   010010 01   HEADER.                                                     CM000057
00084   010020      02  FILLER  PICTURE X(99)   VALUE '   CELL  TYPE CD    RANGE CM000057
00085   010030-     '   UNIT  CODE PARAMETER     MFGR     ARO I-NO CODE UOC    RNCM000057
00086   010040-     '    POS RN   '.                                            CM000057
00087   010050      02  FILLER  PICTURE X(33) VALUE '   NEG RN     UNITS  R DATE CM000057
00088   010060-     '     '.                                                    CM000057
00089   012010 PROCEOURE DIVISION.                                              CM000057
00090          1.
00091              OPEN INPUT C-FILE.
00092              OPEN OUTPUT LISTING.
00093              WRITE LIST FROM F-PAGE AFTER 0.
00094          2.
00095              REAO C-FILE AT END GO TO 99.
00096              IF CF-RN NOT = '0' GO TO  2.
00097   018200         IF EJCT > 52  MOVE 0 TO EJCT                             CM000057
00098   018210         WRITE LIST FROM HEADER AFTER SKP                         CM000057
00099   018211         MOVE '0' TO DSKP
00100   018220         MOVE '1' TO SKP.
00101 **017150         MOVE CF-TC TO LTC.                                       CM000057
00102   017160         MOVE CF-TYPCO TO LTYPCO.                                 CM000057
00103   017170         MOVE CF-RNG TO LRNG.                                     CM000057
00104   017180         MOVE CF-RNGU TO LRNGU.
00105   017190         MOVE CF-RNGCO TO LRNGCO.                                 CM000057
00106   017200         MOVE CF-PARM TO LPARM                                    CM000057
00107   017210         MOVE CF-MFG TO LMFG.                                     CM000057
00108   017220         MOVE CF-INO TO LINO.                                     CM000057
00109   017230         MOVE CF-INOCO TO LINOCO.                                 CM000057
00110   017240         MOVE CF-UDC TO LUDC.                                     CM000057
00111   017250         MOVE CF-RN TO LRN.                                       CM000057
```

3

```
018010          MOVE CF-POS TO LPOS.                                    CM000057
018020          MOVE CF-NEG TO LNEG.                                    CM000057
018030          MOVE CF-EQU TO LEQU.                                    CM000057
018040          MOVE CF-RCAL TO LRCAL.                                  CM000057
018050          WRITE LIST FROM DATALN AFTER DSKP.
                ADD 2 TO EJCT.
                GO TO 2.
            99.
                CLOSE C-FILE LISTING.
                STOP RUN.
```

1

```
00101  IDENTIFICATION DIVISION.                                          CM000082
00102  PROGRAM-ID. 'CM000082'.                                           CM000082
00103  AUTHOR. ROSE.                                                     CM000082
00104  INSTALLATION. ARO INC  TULLAHOMA TENN.                            CM000082
00105  DATE-WRITTEN.                                                     CM000082
00106  DATE-COMPILED. JAN  6,1970                                        CM000082
00107  SECURITY.                                                         CM000082
00108  REMARKS.    PROGRAM  UPDATES RTF C-FILE.                          CM000082
00109  ENVIRONMENT DIVISION.                                             CM000082
00110  CONFIGURATION SECTION.                                            CM000082
00111  SOURCE-COMPUTER. IBM-360.                                         CM000082
00112  OBJECT-COMPUTER. IBM-360.                                         CM000082
00113  INPUT-OUTPUT SECTION.                                             CM000082
00114  FILE-CONTROL.                                                     CM000082
00115      SELECT  GILMORE  ASSIGN 'GILIN'  UTILITY.                     CM000082
00116      SELECT  C-FILE   ASSIGN 'CFILE'  UTILITY.                     CM000082
00117      SELECT  NEW-ONE  ASSIGN 'NUREC'  UTILITY.                     CM000082
001171     SELECT LISTING  ASSIGN 'OOLIST'  UTILITY.                     CM000082
001172     SELECT OPCARD  ASSIGN  'DP001'  UTILITY.                      CM000082
00119  DATA DIVISION.                                                    CM000082
00120  FILE SECTION.                                                     CM000082
00201  FD  GILMORE     RECORDING F  BLOCK 1  RECORDS   RECORD 80         CM000082
00202                  LABEL RECORDS STANDARD   DATA RECORD  GILM.       CM000082
00203  01  GILM.                                                         CM000082
00204      02  G-CND    PICTURE X(4).                                    CM000082
           02  GCELL REDEFINES G-CND.
               03  GA       PICTURE X.
               03  G2       PICTURE XXX.
00205      02  G-CNT    PICTURE 9.                                       CM000082
00206      02  G-TYPCO PICTURE X(7).                                     CM000082
00207      02  G-RANGE PICTURE X(7).                                     CM000082
00208      02  G-RUNIT PICTURE XXX.                                      CM000082
00209      02  G-RCODE PICTURE X.                                        CM000082
00210      02  G-PARM  PICTURE X(9).                                     CM000082
00211      02  G-MFG   PICTURE X(9).                                     CM000082
00212      02  G-ARDNO PICTURE X(6).                                     CM000082
00213      02  G-ARDCD PICTURE X.                                        CM000082
00214      02  G-UDC   PICTURE XXXX.                                     CM000082
00215      02  G-RN    PICTURE X.                                        CM000082
00216      02  G-POS   PICTURE X(9).                                     CM000082
00217      02  G-NEG   PICTURE X(9).                                     CM000082
00218      02  G-PEQ   PICTURE XXX.                                      CM000082
00219      02  G-RCAL  PICTURE X(6).                                     CM000082
00301  FD  C-FILE      RECORDING F  BLOCK 1  RECORDS  RECORD 80          CM000082
00302                  LABEL RECORDS STANDARD  DATA RECORD CFIL.         CM000082
00303  01  CFIL.                                                         CM000082
00304      02  C-ND      PICTURE   X(4).                                 CM000082
           02  CCELL REDEFINES C-ND.
               03  C1       PICTURE X.
               03  C2       PICTURE XXX.
00305      02  C-CNT     PICTURE   9.                                    CM000082
00306      02  C-TYPCD   PICTURE   X(7).                                 CM000082
00307      02  C-RANGE   PICTURE   X(7).                                 CM000082
00308      02  C-RUNIT   PICTURE   XXX.                                  CM000082
```

2

```
00309      02  C-RCODE   PICTURE   X.                                    CM000082
00310      02  C-PARM    PICTURE   X(9).                                 CM000082
00311      02  C-MFG     PICTURE   X(9).                                 CM000082
00312      02  C-ARONO   PICTURE   X(6).                                 CM000082
00313      02  C-AROCO   PICTURE   X.                                    CM000082
00314      02  C-UOC     PICTURE   XXXX.                                 CM000082
00315      02  C-RN      PICTURE   X.                                    CM000082
00316      02  C-POS     PICTURE   X(9).                                 CM000082
00317      02  C-NEG     PICTURE   X(9).                                 CM000082
00318      02  C-PEQ     PICTURE   XXX.                                  CM000082
00319      02  C-RCAL    PICTURE   X(6).                                 CM000082
00401  FD  NEW-ONE      RECORDING F  BLOCK 1  RECORDS   RECORD 80        CM000082
00402                   LABEL RECORDS STANDARD   DATA RECORD NU1.        CM000082
00403  01  NU1.                                                          CM000082
00404      02  FILLER    PICTURE   X(80).                                CM000082
004041 FD  LISTING   RECORDING F  BLOCK 12 RECORDS  RECORD 132           C
004042          LABEL RECORDS OMITTED   DATA RECORD LIST.                CM000082
004043 01  LIST.                                                          CM000082
004044     02  FILLER   PICTURE X(132).                                  CM000082
004050 FD  OPCARD      RECORDING F BLOCK 1 RECORDS  RECORD 80            CM000082
004051                 LABEL RECORDS STANDARD  DATA RECORD OCARD.        CM000082
004052 01  OCARD.                                                         CM000082
004053     02  OPT     PICTURE  X.                                       CM000082
004054     02  FILLER  PICTURE  XX.                                      CM000082
004055     02  DATE.                                                     CM000082
004056         03  MO  PICTURE 99.                                       CM000082
004057         03  DY  PICTURE 99.                                       CM000082
004058         03  YR  PICTURE 99.                                       CM000082
004059     02  FILLER  PICTURE X(70).                                    CM000082
004060     02  COMM    PICTURE X.                                        CM000082
004061         88  COM     VALUE 'C'.                                    CM000082
**00406  WORKING-STORAGE SECTION.                                         CM000082
004061 77  JECT    PICTURE  99  VALUE 60.
       77  JCAR    PICTURE X(6).
004070 01  LLINE.                                                        CM000082
004071     02  SK       PICTURE  X       VALUE '1'.                      CM000082
004073     02  FILLER   PICTURE  XXXX    VALUE SPACE.                    CM000082
           02  L-CELL  PICTURE X.
004075     02  FILLER   PICTURE  XXXX    VALUE SPACE.                    CM000082
004076     02  L-TYPCO  PICTURE  X(7).                                   CM000082
004077     02  FILLER   PICTURE  XXXX    VALUE SPACE.                    CM000082
004078     02  L-RANGE  PICTURE  X(7).                                   CM000082
004079     02  FILLER   PICTURE  XXX     VALUE SPACE.                    CM000082
004080     02  L-UNIT   PICTURE  XXX.                                    CM000082
004081     02  FILLER   PICTURE  XXX     VALUE SPACE.                    CM000082
004082     02  L-CODE   PICTURE  X.                                      CM000082
004083     02  FILLER   PICTURE  XXX     VALUE SPACE.                    CM000082
004084     02  L-PARM   PICTURE  X(9).                                   CM000082
004085     02  FILLER   PICTURE  XXX     VALUE SPACE.                    CM000082
004086     02  L-MFG    PICTURE  X(9).                                   CM000082
004087     02  FILLER   PICTURE  XXX     VALUE SPACE.                    CM000082
004088     02  L-ARONO  PICTURE  X(6).                                   CM000082
004089     02  FILLER   PICTURE  XXX     VALUE SPACE.                    CM000082
004090     02  L-AROCD  PICTURE  X.                                      CM000082
004091     02  FILLER   PICTURE  XXX     VALUE SPACE.                    CM000082
004092     02  L-UOC    PICTURE  XXXX.                                   CM000082
004093     02  FILLER   PICTURE  XXXX    VALUE SPACE.                    CM000082
```

3

```
004094      02  L-RN     PICTURE  X.                                    CM000082
004095      02  FILLER   PICTURE  XXXX    VALUE SPACE.                  CM000082
004096      02  L-POS    PICTURE  X(9).                                 CM000082
004097      02  FILLER   PICTURE  XXX     VALUE SPACE.                  CM000082
004098      02  L-NEG    PICTURE  X(9).                                 CM000082
004099      02  FILLER   PICTURE  XXX     VALUE SPACE.                  CM000082
004100      02  L-PEQ    PICTURE  XXX.                                  CM000082
004101      02  FILLER   PICTURE  XXX     VALUE SPACE.                  CM000082
004102      02  L-RCAL   PICTURE  X(6).                                 CM000082
004103      02  FILLER   PICTURE  X(6)    VALUE SPACE.                  CM000082
004200 01   F-PAGE.                                                     CM000082
00421       02  FILLER PICTURE X(50) VALUE SPACE.                       CM000082
00422       02  FILLER PICTURE X(19) VALUE 'RTF TRANSDUCER FILE'.       CM000082
00423       02  FILLER  PICTURE  X(63)  VALUE SPACE.                    CM000082
00425  01   HEAD.                                                       CM000082
00426       02  FILLER  PICTURE X(20)   VALUE  '   CELL  TYPE CD    '.  CM000082
00427       02  FILLER  PICTURE X(20)   VALUE  'RANGE    UNIT  CODE '.  CM000082
00428       02  FILLER  PICTURE X(20)   VALUE  'PARAMETER     MFGR  '.  CM000082
00429       02  FILLER  PICTURE X(20)   VALUE  '   ARD I-ND CODE UDC'.  CM000082
00430       02  FILLER  PICTURE X(20)   VALUE  '    RN     POS RN    '.  CM000082
00431       02  FILLER  PICTURE X(20)   VALUE  '  NEG RN      UNITS  '.  CM000082
00432       02  FILLER  PICTURE X(12)   VALUE  'R DATE       '.
00501  PROCEDURE DIVISION.                                              CM000082
005011 NOTE1.                                                           CM000082
005012          NOTE  IF A LISTING OF UPDATED FILE IS DESIRED, PUNCH    CM000082
005013                AN 'O' IN COLUMN 1 OF OPTION CARD, ELSE LEAVE     CM000082
005014                COLUMN 1 BLANK.                                   CM000082
005015 BGIN.
00502       OPEN INPUT GILMORE  C-FILE.                                 CM000082
00503       OPEN OUTPUT NEW-ONE.                                        CM000082
005031      OPEN OUTPUT LISTING.                                        CM000082
005032      OPEN INPUT OPCARD.                                          CM000082
005033      READ OPCARD AT END GO TO CARD-ERR.
005034      IF COM NEXT SENTENCE ELSE GO TO CARD-ERR.                   CM000082
00504  READGIL.                                                         CM000082
00505       READ GILMORE AT END GO TO G-END.                            CM000082
00506  READ-C.                                                          CM000082
00507       READ C-FILE AT END GO TO C-END.                             CM000082
            MOVE C-ARDND TO JCAR.
00508  COMPR.                                                           CM000082
00509       IF C-ARDND < G-ARDND                                        CM000082
00510           WRITE NU1 FROM CFIL                                     CM000082
005101      IF OPT = 'O' PERFORM MOV-CF GO TO READ-C ELSE
00511           GO TO READ-C.                                           CM000082
            IF C-ARDND = G-ARDND
            IF C-ARDCD < G-ARDCD
              WRITE NU1 FROM CFIL
              IF OPT = 'O' PERFORM MOV-CF GO TO READ-C
              ELSE GO TO READ-C.
00512       IF C-ARDND = G-ARDND                                        CM000082
              IF C-ARDCD = G-ARDCD
00513           WRITE NU1 FROM GILM                                     CM000082
005131      IF OPT = 'O' PERFORM  MOV-GIL GO TO READGIL ELSE
00514           GO TO READGIL.                                          CM000082
00515       WRITE NU1 FROM GILM.                                        CM000082
005151      IF OPT = 'O' PERFORM MOV-GIL.                               CM000082
00516       READ GILMORE AT END GO TO G-END.                            CM000082
```

4

```
00169   00517        GO TO COMPR.                                          CM000082
00170   00518   C-END.                                                     CM000082
00171   00519        WRITE NU1 FROM GILM.                                  CM000082
00172   005191       IF OPT = 'O' PERFORM MOV-GIL.                         CM000082
00173   00520        READ GILMORE AT END GO TO ALLL.                       CM000082
00174   00521        GO TO C-END.                                          CM000082
00175   00522   G-END.                                                     CM000082
00176                IF JCAR = G-ARONO GO TO GEE.
00177   00524   G1.  WRITE NU1 FROM CFIL.                                  CM000082
00178   005240 GEE.
00179   005241       IF OPT = 'O' PERFORM MOV-CF.                          CM000082
00180   00525        READ C-FILE AT END GO TO ALLL.                        CM000082
00181   00601        GO TO G1.                                             CM000082
00182   006011 CARD-ERR.                                                   CM000082
00183 **006011       DISPLAY 'OPTION CARD IOIOT-EO'.                       CM000082
00184   00602   ALLL.                                                      CM000082
00185   00603        CLOSE C-FILE GILMORE NEW-ONE.                         CM000082
00186   006031       CLOSE LISTING OPCARD.                                 CM000082
00187   00604        STOP RUN.                                             CM000082
00188   007000 MOV-GIL.                                                    CM000082
00189                MOVE G-TYPCO TO L-TYPCO.
00190                MOVE GA TO L-CELL.
00191   00704        MOVE G-RANGE TO L-RANGE                               CM000082
00192   00705        MOVE G-RUNIT TO L-UNIT                                CM000082
00193   00706        MOVE G-RCODE TO L-CODE                                CM000082
00194   00707        MOVE G-PARM  TO L-PARM                                CM000082
00195   00708        MOVE G-MFG   TO L-MFG                                 CM000082
00196   00709        MOVE G-ARONO TO L-ARONO                               CM000082
00197   00710        MOVE G-AROCO TO L-AROCD                               CM000082
00198   00711        MOVE G-UOC   TO L-UOC                                 CM000082
00199   00712        MOVE G-RN    TO L-RN                                  CM000082
00200   00713        MOVE G-POS   TO L-POS                                 CM000082
00201   00714        MOVE G-NEG   TO L-NEG                                 CM000082
00202   00715        MOVE G-PEQ   TO L-PEQ                                 CM000082
00203   00716        MOVE G-RCAL  TO L-RCAL                                CM000082
00204   00717        ADD 1 TO JECT.                                        CM000082
00205   00718        PERFORM CJECT                                         CM000082
00206   00719        WRITE LIST FROM LLINE AFTER SK.  MOVE ' ' TO SK.      CM000082
00207   00720   CJECT.                                                     CM000082
00208   00721        IF JECT > 52                                          CM000082
00209                MOVE 'O' TO SK
00210   00723         WRITE LIST FROM HEAD AFTER O                         CM000082
00211   00724         MOVE C TO JECT.                                      CM000082
00212   008000 MOV-CF.                                                     CM000082
00213                MOVE C1 TO L-CELL.
00214   00803        MOVE C-TYPCO TO L-TYPCO.                              CM000082
00215   00804        MOVE C-RANGE TO L-RANGE.                              CM000082
00216   00805        MOVE C-RUNIT TO L-UNIT                                CM000082
00217   00806        MOVE C-RCODE TO L-CODE                                CM000082
00218   00807        MOVE C-PARM TO L-PARM                                 CM000082
00219   00808        MOVE C-MFG  TO L-MFG.                                 CM000082
00220   00809        MOVE C-ARONO TO L-ARONO                               CM000082
00221   00810        MOVE C-AROCO TO L-AROCD                               CM000082
00222   00811        MOVE C-UOC TO L-UOC                                   CM000082
00223   00812        MOVE C-RN TO L-RN                                     CM000082
00224   00813        MOVE C-POS TO L-POS                                   CM000082
00225   00814        MOVE C-NEG TO L-NEG                                   CM000082
```

5

```
00226   00815      MOVE C-PEQ TO L-PEQ                                    CM000082
00227   00816      MOVE C-RCAL TO L-RCAL                                  CM000082
00228   00817      ADD 1 TO JECT.                                         CM000082
00229   00818      PERFORM CJECT.                                         CM000082
00230   00819      WRITE LIST FROM LLINE AFTER SK.                        CM000082
00231   00820      MOVE ' ' TO SK.                                        CM000082
```

1

```
00001   001010 IDENTIFICATION DIVISION.                                    CM000057
00002   001020 PROGRAM-ID. 'CM000057'.                                     CM000057
00003   001030 AUTHOR.  JACK ROSE.                                         CM000057
00004   001040 INSTALLATION.  ARO  INC.                                    CM000057
00005   001050 DATE-WRITTEN.  DEC  1967.                                   CM000057
00006   001060 DATE-COMPILED. JAN  6,1970                                  CM000057
00007   001070 SECURITY.                                                   CM000057
00008   001080 REMARKS.    PROGRAM UPDATES RTF TRANSDUCER FILE.            CM000057
00009   001090 ENVIRONMENT DIVISION.                                       CM000057
00010   001100 CONFIGURATION SECTION.                                      CM000057
00011   001110    SOURCE-COMPUTER.   IBM-360 H50.                          CM000057
00012   001120    OBJECT-COMPUTER.   IBM-360 H50.                          CM000057
00013   001130 INPUT-OUTPUT SECTION.                                       CM000057
00014   001140    FILE-CONTROL.                                            CM000057
00015   001150     SELECT C-FILE ASSIGN 'CF001' UTILITY.                   CM000057
00016   001160     SELECT C-IN   ASSIGN 'CN001' UTILITY.                   CM000057
00017   001170     SELECT KARDS  ASSIGN  'C0001' UTILITY.                  CM000057
00018   001180     SELECT NU-FILE ASSIGN 'NF00' UTILITY.                   CM000057
00019   001190     SELECT OUTFILE ASSIGN 'OT001' UTILITY.                  CM000057
00020   001200     SELECT LISTING ASSIGN 'LT001' UTILITY.                  CM000057
00021   001220 DATA DIVISION.                                              CM000057
00022   001230 FILE SECTION.
00023   002010 FD  C-FILE  RECORDING F   BLOCK 1 RECORDS   RECORD 80       CM000057
00024   002020             LABEL RECORDS OMITTED    DATA RECORD C-FIL.     CM000057
00025   002030 01  C-FIL.                                                  CM000057
00026   002031     02  CF-TC      PICTURE  X.                              CM000057
00027   002040     02  CF-ND      PICTURE  XXX.                            CM000057
00028   002050     02  CF-CNT     PICTURE  9.                              CM000057
00029   002060     02  CF-TYPCD   PICTURE  X(7).                           CM000057
00030   002070     02  CF-RNG     PICTURE  X(7).                           CM000057
00031   002080     02  CF-RNGU    PICTURE  XXX.                            CM000057
00032   002090     02  CF-RNGCD   PICTURE  X.                              CM000057
00033   002100     02  CF-PARM    PICTURE  X(9).                           CM000057
00034   002110     02  CF-MFG     PICTURE  X(9).                           CM000057
00035 **   09  02  CF-INCD.
00036      10      03  CF-IND  PICTURE X(6).
00037      11      03  CF-INOCD   PICTURE X.
00038   002140     02  CF-UOC     PICTURE  X(4).                           CM000057
00039   002150     02  CF-RN      PICTURE  X.                              CM000057
00040   002160     02  CF-POS     PICTURE  X(9).                           CM000057
00041   002170     02  CF-NEG     PICTURE  X(9).                           CM000057
00042   002180     02  CF-EQU     PICTURE  XXX.                            CM000057
00043 **   20      02  CF-RCAL.
00044      21          03  CFRMO    PICTURE XX.
00045      22          03  CFROY    PICTURE XX.
00046      23          03  CFRYR    PICTURE XX.
00047   003010 FD  KARDS     RECORDING F   BLOCK 10 RECORDS   RECORD 80    CM0
00048   003020             LABEL RECORDS STANDARD DATA RECORDS N-CD C-CD O-CD.  CM000057
00049   003030 01  N-CD.                                                   CM000057
00050   003040     02  N-TC      PICTURE  X.                              CM000057
00051   003041     02  N-ND      PICTURE  XXX.                            CM000057
00052   003050     02  N-CNT     PICTURE  9.                              CM000057
00053   003060     02  N-TYPCD   PICTURE  X(7).                           CM000057
00054   003070     02  N-RNG     PICTURE  X(7).                           CM000057
```

2

```
003080      02  N-RNGU     PICTURE  XXX.                                  CM000057
003090      02  N-RNGCO    PICTURE  X.                                    CM000057
003100      02  N-PARM     PICTURE  X(9).                                 CM000057
003110      02  N-MFG      PICTURE  X(9).                                 CM000057
003120      02  N-INO      PICTURE  X(6).                                 CM000057
003130      02  N-INOCO    PICTURE  X.                                    CM000057
003140      02  N-UDC      PICTURE  XXXX.                                 CM000057
003150      02  N-RN       PICTURE  X.                                    CM000057
003160      02  N-POS      PICTURE  X(9).                                 CM000057
003170      02  N-NEG      PICTURE  X(9).                                 CM000057
003180      02  N-EQU      PICTURE  XXX.                                  CM000057
003190      02  N-RCAL     PICTURE  X(6).                                 CM000057
004010 01   C-CO.                                                         CM000057
004020      02  C-PARM       PICTURE X(9).                                CM000057
004030      02  RC-PARM  REDEFINES C-PARM.                                CM000057
004040          03  RC-P1    PICTURE X(6).                                CM000057
004050          03  FILLER   PICTURE X.                                   CM000057
004060          03  RC-P2    PICTURE X.                                   CM000057
004070          03  FILLER   PICTURE X.                                   CM000057
004080      02  C-INO        PICTURE X(6).                                CM000057
004090      02  C-INOCO      PICTURE X.                                   CM000057
004100      02  C-UDC        PICTURE XXXX.                                CM000057
004110      02  C-RN         PICTURE X.                                   CM000057
004120      02  C-POS        PICTURE X(9).                                CM000057
004130      02  C-NEG        PICTURE X(9).                                CM000057
004140      02  C-RCAL       PICTURE X(6).                                CM000057
004150      02  C-TC         PICTURE X.                                   CM000057
004160      02  FILLER       PICTURE X(34).                               CM000057
005010 01   O-CD.                                                         CM000057
005020      02  O-OPT      PICTURE  X.                                    CM000057
005030              88  OB-OPT  VALUE 'O'.
005040      02  O-PP       PICTURE  XX.                                   CM000057
005050      02  O-DATE.                                                   CM000057
005060          03  O-MO       PICTURE  99.                               CM000057
005070          03  O-DY       PICTURE  99.                               CM000057
005080          03  O-YR       PICTURE  99.                               CM000057
005090      02  FILLER     PICTURE  X(70).                                CM000057
005100      02  O-C        PICTURE  X.                                    CM000057
005110          88  OB-C     VALUE  'C'.                                  CM000057
005130 FO   OUTFILE  RECORDING F  BLOCK 1  RECORDS  RECORD 80             CM000057
005140                LABEL RECORDS STANDARD  DATA RECORD OUTFIL.          CM000057
005150 01   OUTFIL.                                                       CM000057
005160      02  FILLER  PICTURE  X(80).                                   CM000057
006010 FO   C-IN     RECORDING F  BLOCK 1  RECORDS  RECORD 80
006020                LABEL RECORDS STANDARD   DATA RECORD CTIN.           CM000057
006030 01   CTIN.                                                         CM000057
            02 CTIN52  PICTURE X(52).
            02  CTINRN  PICTURE X.
            02  CTIN80  PICTURE X(27).
006060 FO   LISTING   RECORDING F  BLOCK 12 RECORDS  RECORD 132
006070                LABEL RECORDS OMITTED   DATA RECORD LISTT.           CM000057
006080 01   LIST     PICTURE  X(132).                                      CM000057
006090 FO   NU-FILE     RECORDING F BLOCK 25 RECORDS  RECORD 80
006100                  LABEL RECORDS STANDARD  DATA RECORD NU-FIL.
006110 01   NU-FIL.
006120      02  FILLER  PICTURE  X(80).
007010 WORKING-STORAGE SECTION.                                            CM000057
```

```
3

00112   007020 77  SW      PICTURE  9   VALUE 0.                                CM000057
00113   007030 77  KBXS    PICTURE  9   VALUE 0.                                CM000057
00114   007040 77  CSW     PICTURE  9   VALUE 0.                                CM000057
00115   007050 77  SUB     PICTURE 99   VALUE 0.                                CM000057
00116   007060 77  SUB1    PICTURE 99   VALUE 0.                                CM000057
00117   007070 77  SKP     PICTURE X    VALUE '0'.
00118   007080 77  EJCT    PICTURE 99   VALUE 59.                               CM000057
00119   007090 77  DSKP   PICTURE  X   VALUE '0'.
00120   007100 77  SW2   PICTURE   9   VALUE 0.
00121           77  CQSW   PICTURE  9  VALUE 0.
00122   007110 77  J     PICTURE  99  VALUE 0.
00123   007120 77  CBS    PICTURE X VALUE SPACE.
00124 **007020 77  CDC     PICTURE  X(6)   VALUE SPACE.
00125 **    01  01  CT-HOL01.
00126       02      02  CTH1    PICTURE X(41).
00127       03      02  CTHNO   PICTURE X(7).
00128       04      02  CTH1B   PICTURE X(26).
00129       05      02  CTHMO   PICTURE XX.
00130       06      02  CTHOY   PICTURE XX.
00131       07      02  CTHYR   PICTURE XX.
00132       12  01  CT-HOL02.
00133       13      02  CTH2    PICTURE X(80).
00134       14  01  CT-HOL03.
00135       15      02  CTH3    PICTURE X(80).
00136       16  01  CT-HOL04.
00137       17      02  CTH4    PICTURE X(80).
00138       18  01  CT-HOL05.
00139       19      02  CTH5    PICTURE X(80).
00140   007130 01  HOLO-TESTCELL.                                              CM000057
00141   007140     02  HRC-PC  PICTURE X   OCCURS 10.                          CM000057
00142   008081 01  DATALN.                                                     CM000057
00143   008082     02  FILLER   PICTURE   X(4) VALUE SPACE.                    CM000057
00144   008090     02  LTC     PICTURE X.                                      CM000057
00145   008100     02  FILLER  PICTURE X(4) VALUE SPACE.                       CM000057
00146   008110     02  LTYPCD  PICTURE X(7).                                   CM000057
00147   008120     02  FILLER  PICTURE X(4) VALUE SPACE.                       CM000057
00148   008130     02  LRNG    PICTURE X(7).                                   CM000057
00149   008140     02  FILLER  PICTURE X(3) VALUE SPACE.                       CM000057
00150   008150     02  LRNGU   PICTURE XXX.                                    CM000057
00151   008160     02  FILLER  PICTURE XXX  VALUE SPACE.                       CM000057
00152   008170     02  LRNGCO  PICTURE X.                                      CM000057
00153   008180     02  FILLER  PICTURE XXX  VALUE SPACE.                       CM000057
00154   008190     02  LPARM   PICTURE X(9).                                   CM000057
00155   008200     02  FILLER  PICTURE XXX  VALUE SPACE.                       CM000057
00156   008210     02  LMFG    PICTURE X(9).                                   CM000057
00157   008220     02  FILLER  PICTURE XXX  VALUE SPACE.                       CM000057
00158   008230     02  LINO    PICTURE X(6).                                   CM000057
00159   008240     02  FILLER  PICTURE XXX  VALUE SPACE.                       CM000057
00160   008250     02  LINOCD  PICTURE X.                                      CM000057
00161   009010     02  FILLER     PICTURE  XXX  VALUE SPACE.                   CM000057
00162   009020     02  LUOC       PICTURE  XXXX.                               CM000057
00163   009030     02  FILLER     PICTURE  XXXX VALUE SPACE.                   CM000057
00164   009040     02  LRN        PICTURE  X.                                  CM000057
00165   009050     02  FILLER     PICTURE  XXXX VALUE SPACE.                   CM000057
00166   009060     02  LPOS       PICTURE  X(9).                               CM000057
00167   009070     02  FILLER     PICTURE  XXX  VALUE SPACE.                   CM000057
00168   009080     02  LNEG       PICTURE  X(9).                               CM000057
```

```
009090      02  FILLER     PICTURE  XXX  VALUE SPACE.                    CM000057
009100      02  LEQU       PICTURE  XXX.                                 CM000057
009110      02  FILLER     PICTURE  XXX  VALUE SPACE.                    CM000057
009120      02  LRCAL      PICTURE  X(6).                                CM000057
009130      02  FILLER     PICTURE  X(6) VALUE SPACE.                    CM000057
009180 01   F-PAGE.                                                      CM000057
            02  FILLER  PICTURE X(10)   VALUE SPACE.
            02  FILLER  PICTURE X(108)  VALUE 'RTF, J-INSTRUMENT BRANCH,
        -   'MASTER TRANSDUCER INVENTORY AND ASSIGNMENT LISTING (C-FILE)
        -   '              RUN DATE '.
            02  PRMO    PICTURE 99.
            02  FILLER  PICTURE X   VALUE '-'.
            02  PROY    PICTURE 99.
            02  FILLER  PICTURE X   VALUE '-'.
            02  PRYR    PICTURE 99.
            02  FILLER  PICTURE X(6) VALUE SPACE.
        01  F-PAGEB.
            02  FILLER  PICTURE X(10) VALUE SPACE.
            02  FILLER  PICTURE X(32) VALUE 'TRANSDUCERS BY INSTRUMENT NU
        -   'MBER'.
            02  FILLER  PICTURE X(90) VALUE SPACE.
010010 01   HEADER.                                                      CM000057
010020      02  FILLER  PICTURE X(99)   VALUE '   CELL  TYPE CO    RANGE CM000057
010030-     '   UNIT  CODE PARAMETER     MFGR     ARO I-NO CODE UDC    RNCM000057
010040-     '    POS RN   '.                                            CM000057
010050      02  FILLER  PICTURE X(33) VALUE '   NEG RN     UNITS  R DATE CM000057
010060-     '     '.                                                     CM000057
012010 PROCEDURE DIVISION.                                               CM000057
020000 NOTE1.                                                            CM000057
020010      NOTE CARDS USED TO ADD OR REPLACE AN ENTIRELY NEW RECORD     CM000057
020020      MUST BE PRECEEDED WITH A HEADER CARD WHICH HAS 'HEAD-N'      CM000057
020030      PUNCHED IN COLUMNS 75 - 80    THESE CARDS MUST BE SORTED     CM000057
020040      TO ARO-I-NO  COLUMNS 42 - 47  ASCENDING SEQUENCE  ALSO       CM000057
020050      THESE MUST BE FIRST UPDATE CARDS SUPPLIED.                   CM000057
020060 NOTE2.                                                            CM000057
            NOTE  THE NEXT TYPE OF UPDATE CARD IS USED TO MODIFY         CM000057
             OR DELETE AN EXISTING RECORD    THESE CARDS MUST BE         CM000057
             PRECEEDED BY A HEADER CARD WHICH HAS 'HEAD-C' PUNCHED       CM000057
             IN COLUMNS 75 -80   CARDS MUST BE SORTED TO ARO-NO
             COLUMNS 10 - 15  ASCENDING SEQUENCE.                        CM000057
**012024 FIRSTT.
**012020     OPEN INPUT C-IN.                                            CM000057
012030      OPEN OUTPUT C-FILE.                                          CM000057
**    01  A0. READ C-IN AT END GO TO A1.
      02  A2. MOVE CTIN TO CT-HOL01.
            MOVE CTIN TO C-FIL.
      03      READ C-IN AT END GO TO A1.
      04      MOVE CTIN TO CT-HOL02.
      05      READ C-IN AT END GO TO A1.
      06      MOVE CTIN TO CT-HOL03.
      07      READ C-IN AT END GO TO A1.
      08      MOVE CTIN TO CT-HOL04.
      09      READ C-IN AT END GO TO A1.
            IF CTINRN NOT = '4' GO TO A0-ERR.
      11      MOVE CTIN TO CT-HOL05.
      13  A3.
      14      READ C-IN AT END GO TO A1.
```

5

```
0D226                MOVE CTIN TO C-FIL.
00227        15      IF CF-RN NOT = '0' GO TO AO-ERR.
00228        16      IF CF-INCD = CTHNO GO TO ACT1.
00229        18      WRITE C-FIL FROM CT-HOLO1.
00230        19      WRITE C-FIL FROM CT-HOLO2.
00231        20      WRITE C-FIL FROM CT-HOLO3.
00232        21      WRITE C-FIL FROM CT-HOLO4.
00233        22      WRITE C-FIL FROM CT-HOLO5.
00234        23      GO TO A2.
00235 **     D1  ACT1.
00236        02      IF CFRYR > CTHYR GO TO A2.
00237        03      IF CFRYR < CTHYR GO TO ACT2.
00238        D4      IF CFRMO > CTHMO GO TO A2.
00239        05      IF CFRMO < CTHMO GO TO ACT2.
00240        06      IF CFROY > CTHDY GO TO A2.
0D241        07      IF CFRDY < CTHDY GO TO ACT2.
0D242        D8      GO TO A2.
00243        09  ACT2.
0D244        1D      READ C-IN AT END GO TO A1.
00245        11      READ C-IN AT END GO TO A1.
0D246        12      READ C-IN AT END GO TO A1.
0D247        13      READ C-IN AT END GO TO A1.
0D248        14      GO TO A3.
DD249        15  AO-ERR.    DISPLAY 'BAO FILE' CF-INCO.
D025D        16      READ C-IN AT END GO TO A1.
00251                MOVE CTIN TO C-FIL.
00252        17      IF CF-RN NOT = '0' GO TO AO-ERR.
0D253        18      GO TO A2.
00254    D12D8D A1.                                                    CM00D057
00255 **     20      WRITE C-FIL FROM CT-HOLO1.
00256        21      WRITE C-FIL FROM CT-HOLD2.
00257        22      WRITE C-FIL FROM CT-HOLD3.
00258        23      WRITE C-FIL FROM CT-HOLD4.
00259        24      WRITE C-FIL FROM CT-HOLD5.
0026D    01209D      CLOSE C-IN C-FILE.                                CM000057
0D261    012100      OPEN INPUT KARDS.                                 CM000057
00262    D12110      READ KARDS AT END GO TO NO-DP.                    CMDDD057
0D263    D1212D      IF O-DPT NOT = 'D' GO TO ND-DP.                   CM000057
00264                MOVE O-MD TO PRMD.
0D265                MOVE O-DY TO PRDY.
00266                MOVE O-YR TO PRYR.
00267    012130      READ KARDS AT END GO TO END-JOB.
0D268    D12140      IF N-RCAL = 'HEAO-N' GO TO PAR-B.                 CMDD0057
00269    D12150      IF N-RCAL = 'HEAO-C' GO TO PAR-A.                 CM000057
0027D    012160      DISPLAY 'NO HEADER CARD ' STOP RUN.               CM0D0057
00271    012170 NO-DP.                                                 CM000057
00272    012180      DISPLAY 'NO OPTION CARD ' STOP RUN.               CM000057
0D273    01219D PAR-B.                                                 CMDD0057
00274    012200      READ KARDS AT END GO TO PAR-ZZ.                   CM000057
00275                IF N-RCAL = 'HEAD-C' GO TO PAR-A.
00276    012210      OPEN I-O C-FILE.    OPEN OUTPUT NU-FILE.          CM000057
00277    012220 PAR-B1.                                                CMD0D057
00278    012230          READ C-FILE AT END GO TO CBX.                 CM000057
00279    013010 PAR-B2.
00280    D13020      IF CF-INO < N-INO  WRITE NU-FIL FROM C-FIL
00281    D13030          GO TO PAR-B1.
00282    013040      IF CF-INO > N-IND  GO TO B2XXX.
```

6

```
00283   013050        IF CF-INOCD > N-INOCD GO TO B2XXX.
00284   013060        IF CF-INOCD < N-INOCD
00285   013070            MOVE CF-INO TO COC
00286   013080            PERFORM WRN THRU WRNX 5 TIMES
00287   013090            GO TO PAR-B2.
00288   013100 1.
00289   013110        IF CF-RN < N-RN GO TO 2.
00290   013120        IF CF-RN > N-RN DISPLAY '1312' CF-IND GO TO PAR-B1.
00291   013130        MOVE CF-INO TO COC.
00292                 MOVE CF-INOCD TO CBS.
00293   013140        WRITE NU-FIL FROM N-CD. READ KARDS AT END GO TO PAR-ZZ.
00294   013141        IF N-RCAL NOT = 'HEAD-C' GO TO 6.
00295   013142 8.     IF CF-RN = '4' MOVE 1 TO KBXS GO TO KBX.
00296   013143        READ C-FILE AT END GO TO CBX2.
00297   013144        WRITE NU-FIL FROM C-FIL.
00298   013145        GO TO 8.
00299            6.   IF COC = N-INO IF CBS = N-INOCD GO TO 3.
00300   013160 5.     IF CF-RN = '4' GO TO PAR-B1.
00301   013170        READ C-FILE AT END GO TO CBX.
00302   013180        WRITE NU-FIL FROM C-FIL.
00303   013190        GO TO 5.
00304   013200 2.
00305   013210        MOVE CF-IND TO COC
00306   013220        WRITE NU-FIL FROM C-FIL.
00307   013230 3.
00308   013240        READ C-FILE AT END GO TO CBX.
00309   013250        IF CF-INO = CDC GO TO PAR-B2.
00310   014010        DISPLAY '1401' GO TO PAR-B1.
00311   014020 WRN.
00312   014030        IF CDC NOT = CF-INO GO TO WRNX.
00313   014040        WRITE NU-FIL FROM C-FIL.
00314   014050        READ C-FILE AT END GO TO CBX.
00315   014060 WRNX.
00316   014070        EXIT.
00317   014080 B2XXX.
00318                 MOVE N-INOCD TO CBS.
00319   014090        MOVE N-INO TO COC.
00320   014100        MOVE 0 TO J.
00321   014110 WNU.
00322   014120        WRITE NU-FIL FROM N-CD.
00323   014130        ADD 1 J GIVING J.
00324   014140        IF CDC NOT = N-IND DISPLAY '1414' GO TO PAR-B2.
00325   014150 7.
00326   014160        READ KARDS AT END GO TO PAR-ZZ.
00327                 IF N-RCAL = 'HEAD-C' GO TO 89.
00328   014180        IF J NOT = 5 GO TO WNU.
00329   014190        IF COC = N-IND IF CBS = N-INOCD DISPLAY '1419 ' COC CBS
00330   014191            GO TO 7.
00331   014200        GO TO PAR-B2.
00332            89.  WRITE NU-FIL FROM C-FIL.  GO TO 8.
00333 **013130 CBX.                                                    CM000057
00334   013160            WRITE NU-FIL FROM N-CD.                      CM000057
00335 **013140            READ KARDS AT END GO TO CBX1.                CM000057
00336   013150            IF N-RCAL = 'HEAD-C' GO TO CBX2.             CM000057
00337   013170            GO TO CBX.                                   CM000057
00338   013180 CBX2.                                                   CM000057
00339   013190            CLOSE C-FILE  NU-FILE.                       CM000057
```

7

```
013200          OPEN INPUT NU-FILE.                                    CM000057
013210          OPEN OUTPUT C-FILE.                                    CM000057
013220 CBX3.                                                           CM000057
013230          READ NU-FILE AT END GO TO CBX22.                       CM000057
013240          WRITE C-FIL FROM NU-FIL.                               CM000057
013250          GO TO CBX3.                                            CM000057
014010 CBX22.                                                          CM000057
014020          CLOSE C-FILE NU-FILE.                                  CM000057
014030          GO TO PAR-A.                                           CM000057
014040 CBX1.                                                           CM000057
014050          GO TO END-JOB.                                         CM000057
014070 KBX.                                                            CM000057
014080          READ C-FILE AT END GO TO KBX1.                         CM000057
014090          WRITE NU-FIL  FROM C-FIL.
014100          GO TO KBX.                                             CM000057
014110 KBX1.                                                           CM000057
014120          IF KBXS = 1 GO TO CBX2.                                CM000057
014130          GO TO CBX1.                                            CM000057
014140 PAR-A.                                                          CM000057
014150          OPEN I-O C-FILE. OPEN OUTPUT NU-FILE.                  CM000057
014160 PAR-C.                                                          CM000057
014170          READ KARDS AT END GO TO END-JOB.                       CM000057
014180 PAXY.    IF C-PARM = 'ZERO CALS' GO TO E1.                      CM000057
014190          IF RC-P1 = 'DELETE'  GO TO  E2.                        CM000057
014200          IF C-PARM = 'UNASSIGN ' GO TO E3.
014210 PAR-D.
014211          IF SW2 = 1 MOVE D TO SW2 GO TO PAR-D1.
014212          READ C-FILE AT END DISPLAY 'D14212' GO TO END-JOB1.
014213 PAR-D1.
            IF C-INO > CF-INO GO TO SHEWL.
            IF C-INOCD > CF-INOCD GO TO SHEWL.
            IF C-INO < CF-INO GO TO BADAS.
            IF C-INOCD < CF-INOCD GO TO BADAS.
014230          IF C-RN NOT = CF-RN GO TO SHEWL.                       CM000057
014240          IF C-INOCD NOT = SPACE  MOVE C-INOCD TO CF-INOCD       CM000057
014250           MOVE 1 TO CSW.                                        CM000057
015010          IF C-UDC NOT = SPACE  MOVE 1 TO CSW                    CM000057
015020           MOVE C-UDC TO CF-UDC.                                 CM000057
015030          IF C-RN NOT = SPACE MOVE 1 TO CSW                      CM000057
015040           MOVE C-RN TO CF-RN.                                   CM000057
015050          IF C-PDS NOT = SPACE  MOVE 1 TO CSW                    CM000057
015060           MOVE C-POS TO CF-PDS.                                 CM000057
015070          IF C-NEG NOT = SPACE  MOVE 1 TO CSW                    CM000057
015080           MOVE C-NEG TO CF-NEG.                                 CM000057
015090          IF C-RCAL NOT = SPACE  MOVE 1 TO CSW                   CM000057
015100           MOVE C-RCAL TO CF-RCAL.                               CM000057
015110          IF C-TC NOT = SPACE   MOVE 1 TO CSW                    CM000057
015120           MOVE C-TC TO CF-TC.                                   CM000057
015130          IF CSW  = D  MOVE SPACE TO CF-PARM  CF-TC              CM000057
015140           MOVE D TO CSW.
015141      MOVE C-PARM TO CF-PARM.
015150 PAR-DD.                                                         CM000057
015160          WRITE NU-FIL FROM C-FIL.                               CM000057
015170          GO TO PAR-C.                                           CM000057
        BADAS.
            DISPLAY ' BAD INPUT CARD  ' C-CD.
            MOVE 1 TO SW2.
```

```
                GO TO PAR-C.
      015180 SHEWL.
      015190          WRITE NU-FIL FROM  C-FIL.  GO TO PAR-O.                    CM000057
      015200 E1.                                                                 CM000057
      015201          IF SW2 = 1 MOVE 0 TO SW2 GO TO E1B.
      015210          READ C-FILE AT END DISPLAY '015210' GO TO END-JOB1.
      015211 E1B.
      015212      IF C-INO = CF-INO
      015213      IF C-INOCO = CF-INOCD
      015214      IF C-RN = SPACE
      015215      GO TO ZRO-ALL.
      015220          IF C-INO = CF-INO
      015230          IF CF-INOCD = C-INOCD
      015231      IF CF-RN = C-RN
      015240           MOVE SPACE TO          CF-UDC CF-PARM CF-POS CF-NEG       CM000057
      015250           CF-RCAL CF-TC                                             CM000057
      016010           WRITE NU-FIL FROM C-FIL                                   CM000057
      016020           GO TO PAR-C.                                              CM000057
      016030          WRITE NU-FIL FROM C-FIL.                                   CM000057
      016040          GO TO E1.                                                  CM000057
      016041 ZRO-ALL.
      016042      MOVE SPACE TO CF-UDC CF-PARM CF-POS CF-NEG CF-RCAL CF-TC.
      016043      WRITE NU-FIL FROM C-FIL.
      016044      GO TO E1.
      016050 E2.                                                                 CM000057
      016060          IF RC-P2 = SPACE    IF SW2 = 1    MOVE 0 TO SW2
      016061           GO TO E2A1   ELSE GO TO E2A.
      016080 E2R.                                                                CM000057
      016090          ADD 1 TO SUB.                                              CM000057
      016100          MOVE RC-P2 TO HRC-PC (SUB)                                 CM000057
      016110          IF SUB > 10  DISPLAY 'AREA EXCEEDED' GO TO END-JOB.        CM000057
      016120          GO TO PAR-C.                                               CM000057
      016150 E2A.                                                                CM000057
      016151          IF SW2 = 1 MOVE 0 TO SW2 GO TO E2A1.
      016160          READ C-FILE AT END DISPLAY '016160' GO TO END-JOB1.
      016161 E2A1.
      016170          IF C-INO = CF-INO
      016171          IF CF-INOCD = C-INOCD
      016172          MOVE 'XXX' TO CF-NO
      016180           MOVE 1 TO SW
      016190           WRITE NU-FIL FROM C-FIL                                   CM000057
      016200           GO TO E2A.                                                CM000057
      016210          IF SW = 1 MOVE 0 TO SW  MOVE 1 TO SW2  GO TO PAR-C.
      016220          WRITE NU-FIL FROM C-FIL.                                   CM000057
      016230          GO TO E2A.                                                 CM000057
      017030 E3.                                                                 CM000057
      017031          IF SW2 = 1 MOVE 0 TO SW2 GO TO E3A.
      017040          READ C-FILE AT END DISPLAY '017040' GO TO END-JOB1.
      017041 E3A.
      017050          IF C-INO NOT = CF-INO WRITE NU-FIL FROM C-FIL GO TO E3.    CM000057
     **017050          IF CF-INOCD NOT = C-INOCD WRITE NU-FIL FROM C-FIL
      017052          GO TO E3.
      017060          MOVE SPACE TO CF-TC  CF-PARM.                              CM000057
      017070          WRITE NU-FIL FROM C-FIL.                                   CM000057
      017080          GO TO PAR-C.                                               CM000057
      017090 END-JOB.
      017092          IF SW2 = 1 GO TO EJB1.
```

```
00454   017093 EJB0.
00455   017094         READ C-FILE AT END GO TO EJB2.
00456   017095 EJB1.
00457   017096         WRITE NU-FIL FROM C-FIL.
00458   017097         GO TO EJB0.
00459   017098 EJB2.
00460   017099         CLOSE NU-FILE.
00461   017100         OPEN I-O NU-FILE.                                  CM000057
00462   017110         OPEN OUTPUT OUTFILE                                CM000057
00463   017120         OPEN OUTPUT LISTING.                               CM000057
00464   017121     WRITE LIST FROM F-PAGE AFTER 0.                        CM000057
00465              WRITE LIST FROM F-PAGEB AFTER 2.
00466   017122     GO TO CK-JCT.
00467   017130 EJRD.   READ NU-FILE INTO C-FIL AT END GO TO ALLJ.         CM000057
00468   017140         IF CF-ND = 'XXX' GO TO EJRD.     PERFORM CK-TC THRU CX.  CM000057
00469   017150         MOVE CF-TC TO LTC.                                 CM000057
00470   017160         MOVE CF-TYPCD TO LTYPCD.                           CM000057
00471   017170         MOVE CF-RNG TO LRNG.                               CM000057
00472   017180         MOVE CF-RNGU TO LRNGU.
00473   017190         MOVE CF-RNGCD TO LRNGCD.                           CM000057
00474   017200         MOVE CF-PARM TO LPARM                              CM000057
00475   017210         MOVE CF-MFG TO LMFG.                               CM000057
00476   017220         MOVE CF-INO TO LINO.                               CM000057
00477   017230         MOVE CF-INOCD TO LINOCD.                           CM000057
00478   017240         MOVE CF-UDC TO LUDC.                               CM000057
00479   017250         MOVE CF-RN TO LRN.                                 CM000057
00480   018010         MOVE CF-POS TO LPOS.                               CM000057
00481   018020         MOVE CF-NEG TO LNEG.                               CM000057
00482   018030         MOVE CF-EQU TO LEQU.                               CM000057
00483   018040         MOVE CF-RCAL TO LRCAL.                             CM000057
00484   018050         WRITE LIST FROM DATALN AFTER DSKP.
00485   018051         MOVE ' ' TO DSKP
00486   018060         WRITE OUTFIL FROM C-FIL.                           CM000057
00487   018061     ADD 1 TO EJCT.
00488   018070         GO TO CK-JCT.                                      CM000057
00489   018080 CK-TC.
00490   018090         MOVE 1 TO SUB1.                                    CM000057
00491   018100 CK1.                                                       CM000057
00492   018110         IF SUB1 > SUB GO TO CX.                            CM000057
00493   018120         IF CF-TC = HRC-PC (SUB1)                           CM000057
00494   018130         MOVE SPACE TO CF-TC CF-PARM.                       CM000057
00495   018140         ADD 1 TO SUB1.  GO TO CK1.                         CM000057
00496   018150 CX.    EXIT.                                               CM000057
00497   018160 ALLJ.                                                      CM000057
00498   018170         CLOSE C-FILE KARDS NU-FILE OUTFILE LISTING.        CM000057
00499   018180         STOP RUN.                                          CM000057
00500   018190 CK-JCT.                                                    CM000057
00501   018200         IF EJCT > 52  MOVE 0 TO EJCT                       CM000057
00502   018210         WRITE LIST FROM HEADER AFTER SKP                   CM000057
00503   018211         MOVE '0' TO DSKP
00504   018220         MOVE '1' TO SKP.
00505   018230         GO TO EJRD.                                        CM000057
00506   019010 PAR-ZZ.                                                    CM000057
00507   019020         DISPLAY 'NO DATA CARDS FOR HEAD-N'                 CM000057
00508   019030         CLOSE KARDS.                                       CM000057
00509   019040         STOP RUN.
00510   019050 END-JOB1.                                                  CM000057
```

```
  10
 ----
00511   019060          DISPLAY 'ARO-INO WRONG ' C-INO   STOP RUN.
```

1

```
00001    00101  IDENTIFICATION DIVISION.                                    CM000019
00002    00102  PROGRAM-ID. 'CM000019'.                                     CM000019
00003    00104  ENVIRONMENT DIVISION.                                       CM000019
00004    00105  CONFIGURATION SECTION.                                      CM000019
00005    00106  SOURCE-COMPUTER.    IBM-360 H50.                            CM000019
00006 **  107   OBJECT-COMPUTER.    IBM-360 H50.
00007    00108  INPUT-OUTPUT SECTION.                                       CM000019
00008    00109  FILE-CONTROL.                                               CM000019
00009 **  110                 SELECT A-FILE ASSIGN 'AFILEREC' UTILITY.
00010     111                 SELECT B-FILE ASSIGN 'BFILEREC' UTILITY.
00011     112                 SELECT C-FILE ASSIGN 'CFILEREC' UTILITY.
00012     113                 SELECT I-FILE ASSIGN 'IFILEREC' UTILITY.
00013     114                 SELECT PRT-A ASSIGN 'APRTOUT' UTILITY.
00014     115                 SELECT PRT-B ASSIGN  'BPRTOUT' UTILITY.
00015     116                 SELECT D-CARD ASSIGN 'CPRTOUT' UTILITY.
00016     117                 SELECT NPATCHI ASSIGN 'PATIN' UTILITY.
00017     118                 SELECT NHOOKI   ASSIGN 'HOKIN' UTILITY.
00018                         SELECT B-UPTAPE  ASSIGN 'BTAPE' UTILITY.
00019                         SELECT C-UPTAPE  ASSIGN 'CTAPE' UTILITY.
00020    00201  DATA DIVISION.                                             CM000019
00021    00202  FILE SECTION.                                              CM000019
00022    00203  FD  A-FILE          RECORD CONTAINS 80 CHARACTERS          CM000019
00023    00204                      LABEL RECORDS ARE STANDARD             CM000019
00024    00205                      RECORDING MODE IS F                    CM000019
00025 **  206                       BLOCK CONTAINS 45 RECORDS
00026    00207                      DATA RECORD IS A-CARD.                 CM000019
00027    00208  01  A-CARD.                                                CM000019
00028 **  209       02  FILLER  PICTURE X(4).
00029     210       02  A1B-IN  PICTURE S9.                                CM000019
00030     211       02  FILLER  PICTURE X(75).
00031    00701  FD  B-FILE          RECORD CONTAINS 80 CHARACTERS          CM000019
00032    00702                      LABEL RECORDS ARE STANDARD             CM000019
00033    00703                      RECORDING MODE IS F                    CM000019
00034 **  704                       BLOCK CONTAINS 45 RECORDS
00035    00705                      DATA RECORD IS B-CARD.                 CM000019
00036    00706  01  B-CARD.                                                CM000019
00037 **  707       02      B1          PICTURE X(4).                       CM000019
00038    00708      02          B2          PICTURE 9.                      CM000019
00039    00709      02          B3.                                         CM000019
00040    00710          03      B3A         PICTURE X.                      CM000019
00041    00711          03      B3B         PICTURE X(3).                   CM000019
00042    00712          03      B3C         PICTURE X.                      CM000019
00043    00713      02          B3R         REDEFINES B3.                   CM000019
00044    00714          03      B3RA        PICTURE XX.                     CM000019
00045    00715          03      B3RB        PICTURE XX.                     CM000019
00046    00716          03      B3RC        PICTURE X.                      CM000019
00047 **  7161    02  B3RR  REDEFINES B3R.                                  CM000019
00048     7162        03  B3RRA   PICTURE XXXX.                             CM000019
00049     7163        03  B3RRB   PICTURE X.                               CM000019
00050     7164    02  BRR-R  REDEFINES B3.
00051     7165        03  N-B1  PICTURE X.
00052     7166        03  N-B2  PICTURE X.
00053     7167        03  N-B3  PICTURE X.
00054     7168        03  N-B4  PICTURE X.
```

2

```
00055     7169          03  N-B5  P(CTURE X.
00056   00717      02          B4          PICTURE X(24).                  CM000019
00057   00718      02          B5.                                         CM000019
00058   00719          03      B5A         PICTURE XX.                     CM000019
00059   00720          03      B58         P(CTURE XX.                     CM000019
00060 **  7201      02  B5R     REDEFINES B5.
00061     7202      03  B5AR    PICTURE X.
00062     7203      03  B5BR    PICTURE X(3).
00063     7204      02      B5RR REDEFINES B5R.
00064     7205          03  B5ARR   PICTURE XX.
00065     7206          03  B5BRR   P(CTURE X.
00066     7207          03  B5CRR   PICTURE X.
00067   00721      02          B6.                                         CM000019
00068   00723          03      B68         PICTURE X(3).                   CM000019
00069 **00722          03      B6A         PICTURE X(6).                   CM000019
00070   00801      02          B7.                                         CM000019
00071   00802          03      B7A         PICTURE XX.                     CM000019
00072   00803          03      B7A1        P(CTURE X.                      CM000019
00073   00804          03      B78         P(CTURE X(3).                   CM000019
00074   00805          03      B7C         P(CTURE X.                      CM000019
00075   00806      02          B7R         REDEF(NES B7.                   CM000019
00076   00807          03      B7RA        PICTURE X(3).                   CM000019
00077   00808          03      B7RB        PICTURE X.                      CM000019
00078   00809          03      B7RC        P(CTURE X(3).                   CM000019
00079   00810      02          B8.                                         CM000019
00080   00812          03      B8B         PICTURE X(3).                   CM000019
00081 **00811          03      B8A         PICTURE X(6).                   CM000019
00082   00813      02          B9.                                         CM000019
00083   00815          03      B9B         P(CTURE X(3).                   CM000019
00084 **00814          03      B9A         PICTURE X(4).                   CM000019
00085   00816      02          B10         PICTURE X(9).                   CM000019
00086   00817      02          B11         PICTURE X.                      CM000019
00087   00901  FD  C-FILE           RECORD CONTAINS 80 CHARACTERS           CM000019
00088   00902                       LABEL RECORDS ARE STANDARD              CM000019
00089   00903                       RECORDING MODE IS F                     CM000019
00090 **  904                  BLOCK CONTA(NS 45 RECORDS
00091   00905                       DATA RECORD IS C-CARD.                  CM000019
00092   00906  01  C-CARD.                                                  CM000019
00093              02  C1      PICTURE X.
00094              02  C1AAA    PICTURE XXX.
00095   00908      02          C2          PICTURE 9.                      CM000019
00096 **  909      02      C3          P(CTURE X(7).                       CM000019
00097   00910      02          C4.                                         CM000019
00098   00911          03      C4A         PICTURE X(7).                   CM000019
00099   00912          03      C4B         PICTURE X(3).                   CM000019
00100   00913          03      C4C         P(CTURE X.                      CM000019
00101   00914      02          C5          PICTURE X(9).                   CM000019
00102 **  915      02      C6  PICTURE X(9).
00103   00916      02          C7.                                         CM000019
00104 **  917          03      C7A     PICTURE X(6).
00105   00918          03      C7B         PICTURE X.                      CM000019
00106   00919      02          C8          PICTURE XI4).                   CM000019
00107 **  920      02      C9  PICTURE X.
00108   00921      02          C10.                                        CM000019
00109   00922          03      C10A        PICTURE XI9).
00110   00924      02          C11.                                        CM000019
00111   00925          03      C11A        PICTURE X(9).                   CM000019
```

3

```
00112   01001          03      C11B        PICTURE X(3).                          CM000019
00113 ** 1002       02  C12.
00114    10021          03  C12A     PICTURE  XX.
00115    10022          03  C12B     PICTURE  XX.
00116    10023          03  C12C     PICTURE  XX.
00117   01101  FD  I-FILE             RECORD CONTAINS 80 CHARACTERS                CM000019
00118   01102                         LABEL RECORDS ARE STANDARD                   CM000019
00119   01103                         RECORDING MODE IS F                          CM000019
00120   01104                         BLOCK CONTAINS 10 RECORDS
00121 ** 1105                    DATA RECORDS ARE I-CARD OPT-CARD.
00122    11051 01   OPT-CARD.
00123    11052      02  OPT-CALDATE   PICTURE 9(6).
00124               02 OPT-LISTC   PICTURE X.
00125               02 FILLER      PICTURE X(72).
00126 **  11054     02  CK-OPTT          PICTURE  X.
00127    11054          88  CKPTT        VALUE 'O'.
00128   01106  01   I-CARD.                                                        CM000019
00129   01107      02          I1          PICTURE X(9).                          CM000019
00130   01108      02          I2          PICTURE 9.                             CM000019
00131   01109      02  I3      PICTURE X(18).
00132 ** 1110      02          I4.
00133    11101          03      I4A      PICTURE XX.
00134    11102          03      I4B      PICTURE X.
00135 ** 11102          03  I4C   PICTURE  X.
00136    11103      02          I4R      REDEFINES I4.
00137    11104          03      I4AR     PICTURE X.
00138    11105          03      I4BR     PICTURE XX.
00139    11106          03  I4CR  PICTURE  X.
00140    1111       02      I5       PICTURE X(9).                                 CM000019
00141   01112      02          I6.                                                CM000019
00142   01113          03      I6A         PICTURE X.                             CM000019
00143 ** 1114          03      I6B      PICTURE X(6).
00144   01115          03      I6C         PICTURE X.                             CM000019
00145   01116          03      I6D         PICTURE X(3).                          CM000019
00146   01117          03      I6E         PICTURE X.                             CM000019
00147   01118      02          I6R         REDEFINES I6.                          CM000019
00148   01119          03      I6RA        PICTURE X.                             CM000019
00149   01120          03      I6RB        PICTURE X(7).                          CM000019
00150   01121          03      I6RC        PICTURE X(3).                          CM000019
00151   01122          03      I6RD        PICTURE X.                             CM000019
00152   01123      02          I7.                                                CM000019
00153 ** 1124          03  I7A      PICTURE X.                                     CM000019
00154    1125          03  I7B      PICTURE X.                                     CM000019
00155    1126          03  I7C      PICTURE X.                                     CM000019
00156    1127          03  I7D      PICTURE X.                                     CM000019
00157    1128          03  I7E      PICTURE X.                                     CM000019
00158    1129      02      I7R      REDEFINES I7.                                  CM000019
00159    1130          03  I7AR     PICTURE XX.                                    CM000019
00160    1131          03  I7BR     PICTURE XX.                                    CM000019
00161    1132          03  I7CR     PICTURE X.                                     CM000019
00162    1133      02      I7RR     REDEFINES I7R.                                 CM000019
00163    1134          03  I7ARR    PICTURE X.                                     CM000019
00164    1135          03  I7BRR    PICTURE XXX.                                   CM000019
00165    1136          03  I7CRR    PICTURE X.                                     CM000019
00166   01206      02          I8.                                                CM000019
00167 ** 1207          03  I8A      PICTURE X.                                     CM000019
00168    1208          03  I8B      PICTURE X.                                     CM000019
```

4

```
00169   1209          03  I8C     PICTURE X.                                CM000019
00170   1210          03  I8D     PICTURE X.                                CM000019
00171   1213          03  I8E     PICTURE X.                                CM000019
00172   1214      02      I8R     REDEFINES I8.                             CM000019
00173   1215          03  I8AR    PICTURE XX.                               CM000019
00174   1216          03  I8BR    PICTURE XX.                               CM000019
00175   1217          03  I8CR    PICTURE X.                                CM000019
00176   1218      02      I8RR    REDEFINES I8R.                            CM000019
00177   1219          03  I8ARR   PICTURE X.                                CM000019
00178   1220          03  I8BRR   PICTURE XXX.                              CM000019
00179   1221          03  I8CRR   PICTURE X.                                CM000019
00180   1222      02      I9.                                               CM000019
00181   1223          03  I9A     PICTURE X.                                CM000019
00182   1224          03  I9B     PICTURE X.                                CM000019
00183   1225          03  I9C     PICTURE X.                                CM000019
00184   1226          03  I9D     PICTURE X.                                CM000019
00185   1227          03  I9E     PICTURE X.                                CM000019
00186   1228      02      I9R     REDEFINES I9.                             CM000019
00187   1229          03  I9AR    PICTURE XX.                               CM000019
00188   1230          03  I9BR    PICTURE XX.                               CM000019
00189   1231          03  I9CR    PICTURE X.                                CM000019
00190   1232      02      I9RR    REDEFINES I9R.                            CM000019
00191   1233          03  I9ARR   PICTURE X.                                CM000019
00192   1234          03  I9BRR   PICTURE XXX.                              CM000019
00193   1235          03  I9CRR   PICTURE X.                                CM000019
00194   1236      02      I10.                                              CM000019
00195   1237          03  I10A    PICTURE X.                                CM000019
00196   1238          03  I10B    PICTURE X.                                CM000019
00197   1239          03  I10C    PICTURE X.                                CM000019
00198   1240          03  I10D    PICTURE X.                                CM000019
00199   1241          03  I10E    PICTURE X.                                CM000019
00200   1242      02      I10R    REDEFINES I10.                            CM000019
00201   1243          03  I10AR   PICTURE XX.                               CM000019
00202   1244          03  I10BR   PICTURE XX.                               CM000019
00203   1245          03  I10CR   PICTURE X.                                CM000019
00204   1246      02      I10RR   REDEFINES I10R.                           CM000019
00205   1247          03  I10ARR  PICTURE X.                                CM000019
00206   1248          03  I10BRR  PICTURE XXX.                              CM000019
00207   1249          03  I10CRR  PICTURE X.                                CM000019
00208   1250      02      I11     PICTURE XX.                               CM000019
00209   1251      02      I12     PICTURE X(4).                             CM000019
00210   1252      02      I13     PICTURE X.                                CM000019
00211  01301  FD  PRT-A           RECORD CONTAINS 133 CHARACTERS            CM000019
00212  01302                      LABEL RECORDS ARE STANDARD                CM000019
00213  01303                      RECORDING MODE IS F                       CM000019
00214  01304                      BLOCK CONTAINS 1  RECORDS
00215  01305                      DATA RECORD IS PAT-PRT.                   CM000019
00216  01306  01  PAT-PRT.                                                  CM000019
00217  01307      02  FILLER      PICTURE X(133).                           CM000019
00218  01308  FD  PRT-B           RECORD CONTAINS 133 CHARACTERS            CM000019
00219  01309                      LABEL RECORDS ARE STANDARD                CM000019
00220  01310                      RECORDING MODE IS F                       CM000019
00221  01311                      BLOCK CONTAINS 1  RECORDS
00222  01312                      DATA RECORD IS HK-PRT.                    CM000019
00223  01313  01  HK-PRT.                                                   CM000019
00224  01314      02  FILLER      PICTURE X(133).                           CM000019
00225 ** 1315  FD  O-CARD         RECORD CONTAINS 133 CHARACTERS
```

5

```
00226   01316                          LABEL RECORDS ARE STANDARD                    CM000019
00227   01317                          RECORDING MODE IS F                           CM000019
00228   01318                          BLOCK CONTAINS 12 RECORDS
00229   01319                          DATA RECORD IS PRT-REC.
00230 ** 1320  01  PRT-REC      PICTURE  X(133).
00231 **   46  FD  NPATCHI   RECORDING F  RECORD 133  BLOCK 1 RECORDS
00232      47              LABEL RECORDS STANDARD   DATA RECORD NPATI.
00233      48  01  NPATI   PICTURE  X(133).
00234      49  FD  NHOOKI   RECORDING F  BLOCK 1 RECORDS RECORD 133
00235      50              LABEL RECORDS STANDARD  DATA RECORD NOOKI.
00236      51  01  NOOKI   PICTURE  X(133).
00237          FD  B-UPTAPE   RECORDING F  BLOCK 1  RECORDS  RECORD  80
00238                         LABEL RECORDS STANDARD  DATA RECORD B-UPTAPER.
00239          01  B-UPTAPER   PICTURE  X(80).
00240          FD  C-UPTAPE   RECORDING F  BLOCK 1  RECORDS  RECORD  80
00241                         LABEL RECORDS STANDARD  DATA RECORD C-UPTAPER.
00242          01  C-UPTAPER   PICTURE  X(80).
00243   01401  WORKING-STORAGE SECTION.                                             CM000019
00244   01402      77  P-CNT        PICTURE S9 COMPUTATIONAL-3 VALUE ZERO.          CM000019
00245   014030 77  C-SUB   PICTURE S9999   COMPUTATIONAL-3  VALUE 0.
00246 ** 14031     77  DC-SUB  PICTURE S999 COMPUTATIONAL-3 VALUE ZERO.             CM000019
00247    14032     77  DB-SUB  PICTURE 9999 COMPUTATIONAL-3 VALUE ZERO.
00248    1404  77  B-SUB   PICTURE S9999   COMPUTATIONAL-3  VALUE 0.
00249   01405      77  CSW-1        PICTURE S9 COMPUTATIONAL-3 VALUE ZERO.          CM000019
00250   01406      77  CSW-2        PICTURE S9 COMPUTATIONAL-3 VALUE ZERO.          CM000019
00251   01407      77  C-SW         PICTURE X VALUE SPACE.                          CM000019
00252   01408      77  FLIP-SW      PICTURE S99 COMPUTATIONAL-3 VALUE ZERO.         CM000019
00253 ** 1409      77  S-ST1   PICTURE S9 COMPUTATIONAL-3 VALUE ZERO.
00254    1410      77  S-ST2   PICTURE XXX VALUE SPACE.
00255    1411      77  S-ST3   PICTURE XXX VALUE SPACE.
00256    1412      77  STA-SW       PICTURE S9 COMPUTATIONAL-3 VALUE ZERO.
00257    1413      77  ST-1         PICTURE XX VALUE SPACE.
00258    1414      77  ST-2         PICTURE X(4) VALUE SPACE.
00259 ** 1414      77  ST-3         PICTURE XX      VALUE SPACE.
00260    1416      77  ST-4         PICTURE XXX VALUE SPACE.
00261    1417      77  ST-5         PICTURE X      VALUE SPACE.
00262    1418      77  ST-6         PICTURE X    VALUE SPACE.
00263    1419      77  ST-7         PICTURE X(5) VALUE SPACE.
00264    1420      77  APT-SUB PICTURE S99 COMPUTATIONAL-3 VALUE ZERO.
00265    1421      77  SCA-SW  PICTURE S9  COMPUTATIONAL-3 VALUE ZERO.
00266   01422      77  PB-SW2       PICTURE S9 COMPUTATIONAL-3 VALUE ZERO.          CM000019
00267   01423      77  B-ST         PICTURE XXX VALUE SPACE.                        CM000019
00268   01424      77  D-SW1        PICTURE S9 COMPUTATIONAL-3 VALUE ZERO.          CM000019
00269   01425      77  D-SW2        PICTURE S9 COMPUTATIONAL-3 VALUE ZERO.          CM000019
00270   01501      77  D-SW4        PICTURE S9 COMPUTATIONAL-3 VALUE ZERO.          CM000019
00271   01502      77  R-ST         PICTURE XXX VALUE SPACE.                        CM000019
00272          77  IFCLIST   PICTURE X.
00273   01503      77  PL-CK        PICTURE S9 COMPUTATIONAL-3 VALUE ZERO.          CM000019
00274   01513      77  THRU-SW      PICTURE S9  COMPUTATIONAL-3 VALUE ZERO.         CM000019
00275   01516      77  LN-CTR       PICTURE S99 COMPUTATIONAL-3 VALUE ZERO.         CM000019
00276   01519      77  CPRT1        PICTURE S9 COMPUTATIONAL-3 VALUE ZERO.          CM000019
00277   01524      77  HK-SUB       PICTURE S9 COMPUTATIONAL-3 VALUE ZERO.          CM000019
00278 ** 1526      77  AL-SUB       PICTURE S9 COMPUTATIONAL-3 VALUE ZERO.
00279    1527      77  BSW-1   PICTURE S9 COMPUTATIONAL-3 VALUE ZERO.               CM000019
00280    1528      77  BSW-2   PICTURE S9 COMPUTATIONAL-3 VALUE ZERO.               CM000019
00281 ** 1528      77  PAT-SUB PICTURE S99 COMPUTATIONAL-3 VALUE ZERO.              CM000019
00282    1531      77  N-SUB   PICTURE S99 COMPUTATIONAL-3 VALUE ZERO.              CM000019
```

6

```
00283     1534        77  SQ-SUB   PICTURE S9 COMPUTATIONAL-3 VALUE ZERO.          CM000019
00284     1536        77  D-SW3    PICTURE S9 COMPUTATIONAL-3 VALUE ZERO.
00285 ** 1536         77  SQUID-COUNT PICTURE S9 COMPUTATIONAL-3 VALUE ZERO.
00286   015390 77    R-TOT    PICTURE  S9999  COMPUTATIONAL-3  VALUE 0.
00287 ** 1540         77  ITEM-NO      PICTURE X(4).
00288     1541        77  Z-TOT    PICTURE S999 COMPUTATIONAL-3 VALUE ZERO.        CM000019
00289     1542        77  PB-SW1   PICTURE S9 COMPUTATIONAL-3 VALUE ZERO.
00290   015430 77    HK-CTR     PICTURE 99  COMPUTATIONAL-3  VALUE 0.
00291 ** 1544   77    17-SWT   PICTURE  9  COMPUTATIONAL-3 VALUE 0.
00292   015450 77    M-SW1    PICTURE  9  COMPUTATIONAL-3  VALUE 0.
00293   015470 77    M-SW2    PICTURE  9  COMPUTATIONAL-3  VALUE 0.
00294   015500 77    M-SW3    PICTURE  9  COMPUTATIONAL-3  VALUE 0.
00295 ** 15510 77     SUB36    PICTURE 99      VALUE 0.
00296 **    20  77    A-CT     PICTURE  99   COMPUTATIONAL-3  VALUE 0.            CM000020
00297       21  77    B-CT     PICTURE  99   COMPUTATIONAL-3  VALUE 0.            CM000020
00298           77    TSTCELL      PICTURE X.
00299       22  77    C-CT     PICTURE  99   COMPUTATIONAL-3  VALUE 0.            CM000020
00300           77    CF-SW    PICTURE  9  VALUE 0.
00301           01    CNG-PZ7.
00302                 02  PZM.
00303                     03  PZ1      PICTURE  X.
00304                     03  PZ2      PICTURE  X.
00305                     03  PZ3      PICTURE  X.
00306                     03  PZ4      PICTURE  X.
00307     2134      02  PZMP.
00308                     03  PZMP1     PICTURE  X.
00309                     03  PZMP2     PICTURE  X.
00310                     03  PZMP3     PICTURE  X.
00311                     03  PZMP4     PICTURE  X.
00312           01    M-STORES.
00313                 02  M-1ST.
00314                     03  M-ST1    PICTURE  XXXX.
00315                     03  M-ST1B   PICTURE  X.
00316                 02  M-2ST.
00317                     03  M-ST2    PICTURE  XXXX.
00318                     03  M-ST2B   PICTURE  X.
00319                 02  M-3ST.
00320                     03  M-ST3    PICTURE  XXXX.
00321                     03  M-ST3B   PICTURE  X.
00322                 02  M-4ST.
00323                     03  M-ST4    PICTURE  XXXX.
00324                     03  M-ST4B   PICTURE  X.
00325                 02  M-5ST.
00326                     03  M-ST5    PICTURE  XXXX.
00327                     03  M-ST5B   PICTURE  X.
00328                 02  M-6ST.
00329                     03  M-ST6    PICTURE  XXXX.
00330                     03  M-ST6B   PICTURE  X.
00331 ** 1608   01    D-CALDATE.
00332     1609        02  D-CMD    PICTURE  XX.
00333     1610        02  D-CDY    PICTURE  XX.
00334     1611        02  D-CYR    PICTURE  XX.
00335   01613   01    AERR.                                                         CM000019
00336 ** 1614         02  AEF      PICTURE X VALUE '0'.                            CM000019
00337   01614         02  FILLER   PICTURE X(7) VALUE 'I-CARD '.                   CM000019
00338   01615         02  AEA      PICTURE X(9) VALUE SPACE.                       CM000019
00339   01616         02  FILLER   PICTURE X(19) VALUE ' INSTR ASSIGNED TO '.      CM000019
```

7

```
00340   01617      02  AFB     PICTURE X(9) VALUE SPACE.                    CM000019
00341 ** 1618      02  FILLER  PICTURE X(88).                               CM000019
00342   01619  01  BERR.                                                    CM000019
00343   01620      02  BFE     PICTURE X VALUE '0'.                         CM000019
00344   01621      02  FILLER  PICTURE X(9) VALUE 'ERROR AT '.             CM000019
00345 ** 1622      02  BEA    PICTURE 9(3).
00346   01623      02  FILLER  PICTURE X(9)  VALUE 'ON INPUT '.            CM000019
00347   01624      02  BEB     PICTURE X(9) VALUE SPACE.                    CM000019
00348 ** 1625      02  FILLER  PICTURE X(102).                              CM000019
00349   01701  01  CERR.                                                    CM000019
00350   01702      02  CEF     PICTURE X VALUE '0'.                         CM000019
00351   01703      02  FILLER  PICTURE X(12) VALUE 'INST. N/A IN'.         CM000019
00352   01704      02  CEA     PICTURE X(9).                                CM000019
00353   01705      02  FILLER  PICTURE X(4) VALUE ' AT '.                   CM000019
00354   01706      02  CEB     PICTURE 9(3).                                CM000019
00355 ** 1707      02  FILLER  PICTURE X(104).                              CM000019
00356    1708  01  PATTAB.
00357    1709      02  APT1    PICTURE X(4) OCCURS 96 TIMES.                CM000019
00358    1710      02  APT1A   PICTURE 9 OCCURS 96 TIMES.
00359    1711      02  APT2    PICTURE X(9) OCCURS 96 TIMES.
00360    1712      02  APT3    PICTURE X(7) OCCURS 96 TIMES.
00361    1713      02  APT4    PICTURE X(9) OCCURS 96 TIMES.                CM000019
00362 **  1714      02  APT5    PICTURE 9 OCCURS 96 TIMES.
00363   01801  01  B-TEMP.                                                  CM000019
00364 ** 1802      02  BT1     PICTURE X(4).                                CM000019
00365   01803      02          BT2         PICTURE 9.                       CM000019
00366   01804      02          BT3.                                         CM000019
00367   01805          03      BT3A        PICTURE X.                       CM000019
00368   01806          03      BT3B        PICTURE X(3).                    CM000019
00369   01807          03      BT3C        PICTURE X.                       CM000019
00370   01808      02          B3TR        REDEFINES BT3.                   CM000019
00371   01809          03      B3TRA       PICTURE XX.                      CM000019
00372   01810          03      B3TRB       PICTURE XX.                      CM000019
00373   01811          03      B3TRC       PICTURE X.                       CM000019
00374   018111     02  B3TRR REDEFINES B3TR.                                CM000019
00375   018112         03  B3TRRA  PICTURE XXXX.                            CM000019
00376   018113         03  B3TRRB  PICTURE X.                               CM000019
00377   01812      02          BT4         PICTURE X(24).                   CM000019
00378   01813      02          BT5.                                         CM000019
00379   01814          03      B5TA        PICTURE XX.                      CM000019
00380   01815          03      B5TB        PICTURE XX.                      CM000019
00381   01816      02          BT6.                                         CM000019
00382   01818          03      BT6B        PICTURE X(3).                    CM000019
00383 **01817          03      BT6A        PICTURE X(6).                    CM000019
00384   01819      02          BT7.                                         CM000019
00385   01820          03      BT7A        PICTURE XX.                      CM000019
00386   01821          03      BT7A1       PICTURE X.                       CM000019
00387   01822          03      BT7B        PICTURE X(3).                    CM000019
00388   01823          03      BT7C        PICTURE X.                       CM000019
00389   01824      02          BT7R        REDEFINES BT7.                   CM000019
00390   01825          03      BT7RA       PICTURE X(3).                    CM000019
00391   01901          03      BT7RB       PICTURE X.                       CM000019
00392   01902          03      BT7RC       PICTURE X(3).                    CM000019
00393   01903      02          BT8.                                         CM000019
00394   01905          03      BT8B        PICTURE X(3).                    CM000019
00395 **01904          03      BT8A        PICTURE X(6).                    CM000019
00396   01906      02          BT9.                                         CM000019
```

8

```
00397   01908          03      BT9B        PICTURE X(3).                    CM000019
00398 **01907          03      BT9A        PICTURE X(4).                    CM000019
00399   01909      02          BT10        PICTURE X(9).                    CM000019
00400   01910      02          BT11        PICTURE X.                       CM000019
00401   02001  01  SQCK-LN.                                                 CM000019
00402 ** 2002      02  FILLER  PICTURE X(4).
00403    20021     02  A1B5    PICTURE 9.
00404 ** 20021     02  A1B6    REDEFINES A1B5.
00405 ** 20021         03  A1A6    PICTURE X.
00406    20022     02  FILLER  PICTURE X(40).
00407   02003      02  A135A   PICTURE X.                                   CM000019
00408 ** 20031     02  A135B   PICTURE X.                                   CM000019
00409    20032     02  A13R8   REDEFINES A135B PICTURE 9.                   CM000019
00410    2004      02  FILLER  PICTURE X(6).                                CM000019
00411    2005      02  A155A   PICTURE X.
00412    20051     02  A155B   PICTURE X.                                   CM000019
00413    20052     02  A15RB   REDEFINES A155B PICTURE 9.                   CM000019
00414    2008      02  FILLER  PICTURE X(6).                                CM000019
00415    2009      02  A185A   PICTURE X.
00416    20091     02  A185B   PICTURE X.                                   CM000019
00417    20092     02  A18R8   REDEFINES A185B PICTURE 9.                   CM000019
00418    2010      02  FILLER  PICTURE X(17).
00419    2019  01  ALN-TAB.
00420    2020      02  ALN     PICTURE X(80) OCCURS 6 TIMES.                CM000019
00421   02101  01  SQTAB.                                                   CM000019
00422 ** 2102      02  QPRTA   PICTURE X(4) OCCURS 6 TIMES.                 CM000019
00423    2103      02  QPRTB   PICTURE 9 OCCURS 6 TIMES.                    CM000019
00424    2104      02  QPRTC   PICTURE X(5) OCCURS 6 TIMES.                 CM000019
00425    21041     02  QPRTD   PICTURE S9 COMPUTATIONAL-3 OCCURS 6 TIMES.   CM000019
00426    21042     02  QPRTE   PICTURE X(9) OCCURS 6 TIMES.                 CM000019
00427    21043     02  QPRTF   PICTURE X(9) OCCURS 6 TIMES.
00428   02105  01  AOUT-PRT.                                                CM000019
00429   021051     02  CCA     PICTURE X VALUE '0'.                          CM000019
00430 ** 2106      02  FILLER  PICTURE X(6) VALUE SPACE.                    CM000019
00431    2107      02  FILLER  PICTURE X VALUE 'C'.                         CM000019
00432    2108      02  FILLER  PICTURE X(15) VALUE SPACE.                   CM000019
00433    2109      02  FILLER  PICTURE X(12) VALUE 'FROM      TO'.          CM000019
00434    2110      02  FILLER  PICTURE X(48)  VALUE SPACE.
00435    21101     02  FILLER PICTURE X(50) VALUE 'C                FROM      TO
00436    21102-    '                    '.
00437    2111  01  AAOUT-PRT.                                               CM000019
00438    21111     02  CCAA    PICTURE X VALUE ' '.                          CM000019
00439    21112     02  FILLER  PICTURE X(26) VALUE 'ITEM  C   DEVICE      POIN'.CM000019
00440    21113     02  FILLER  PICTURE X(11) VALUE 'T     POINT'.
00441    21114     02  FILLER  PICTURE X(39)  VALUE SPACE.
00442    21115     02  FILLER PICTURE  X(56) VALUE 'ITEM  C   DEVICE      POINT
00443    21116-    '    POINT                    '.
00444   02112  01  BOUT-PRT.                                                CM000019
00445   02113      02  CCB     PICTURE X VALUE '0'.                          CM000019
00446 ** 2114      02  PAT1    PICTURE X(4).                                CM000019
00447    2115      02  FILLER  PICTURE XX VALUE SPACE.                      CM000019
00448    2116      02  PAT1A   PICTURE  Z.
00449    2117      02  FILLER  PICTURE XXX VALUE SPACE.                     CM000019
00450    2118      02  PAT2    PICTURE X(9).                                CM000019
00451    2119      02  FILLER  PICTURE XXX VALUE SPACE.                     CM000019
00452    2120      02  PAT3    PICTURE X(7).                                CM000019
00453    2121      02  FILLER  PICTURE XXX VALUE SPACE.                     CM000019
```

9

```
00454    2122      02  PAT4    PICTURE X(9).                                    CM000019
00455    2123      02  FILLER  PICTURE X(35)  VALUE SPACE.
00456    21231     02  TAP1    PICTURE XXXX  VALUE SPACE.
00457    2124      02  FILLER  PICTURE XX  VALUE SPACE.
00458    2125      02  TAP1A   PICTURE Z.
00459    2126      02  FILLER  PICTURE  XXX  VALUE SPACE.
00460    2127      02  TAP2    PICTURE  X(9).
00461    2128      02  FILLER  PICTURE  XXX  VALUE SPACE.
00462    2129      02  TAP3    PICTURE X(7).
00463    2130      02  FILLER  PICTURE XXX   VALUE SPACE.
00464    2131      02  TAP4    PICTURE  X(9).
00465 ** 2123      02  FILLER  PICTURE  X(9)   VALUE SPACE.
00466    2133      02  PAT36   PICTURE 99.
00467    2134      02  PZPAT   PICTURE  XXXX.
00468    02201  01  COUT-PRT.                                                   CM000019
00469    02202     02  CCC     PICTURE X VALUE '0'.                             CM000019
00470 ** 2203      02  FILLER  PICTURE X(26) VALUE '          C                '.CM000019
00471    2204      02  FILLER  PICTURE X(26) VALUE '       TRAN  TRAN          '.CM000019
00472    2205      02  FILLER  PICTURE X(26) VALUE 'CONNECTING     WIRED  UDC '.CM000019
00473    2206      02  FILLER  PICTURE X(26) VALUE '   SIG.    SIG.            '.CM000019
00474    2207      02  FILLER  PICTURE X(26) VALUE '   TYP  CAB  LOC  ITEM  C '.CM000019
00475    2208      02  FILLER  PICTURE X(26) VALUE '  '.                        CM000019
00476    02209  01  DOUT-PRT.                                                   CM000019
00477    02210     02  CCD     PICTURE X VALUE ' '.                             CM000019
00478 ** 2211      02  FILLER  PICTURE X(26) VALUE 'PARAMETER C NOMENCLATURE  '.CM000019
00479    2212      02  FILLER  PICTURE X(26) VALUE '       CARD  I-NO.    DEVI'.CM000019
00480    2213      02  FILLER  PICTURE X(26) VALUE 'CE    POINT    S.C.   CARD'.CM000019
00481    2214      02  FILLER  PICTURE X(26) VALUE '   COND.   COND.   READOUT'.CM000019
00482    2215      02  FILLER  PICTURE X(26) VALUE '   NO.  FAB  SK.   NO   C '.CM000019
00483    22151     02  FILLER  PICTURE X(26) VALUE '  '.
00484    02216  01  EOUT-PRT.
00485    02217     02  CCE     PICTURE X VALUE '0'.
00486    02219     02  PBT1    PICTURE X(9).
00487 ** 2220      02  FILLER  PICTURE X VALUE SPACE.
00488    22201     02  PBT1A   PICTURE 9.
00489    22202     02  FILLER  PICTURE X VALUE SPACE.
00490    02221     02  PBT2    PICTURE X(18).
00491    02222     02  FILLER  PICTURE XXX  VALUE SPACE.
00492    02223     02  PBT3    PICTURE X(4).
00493 ** 2224      02  FILLER  PICTURE XX VALUE SPACE.
00494    022250    02  PBT4    PICTURE X(6).
00495 ** 2301      02  FILLER  PICTURE X(3) VALUE SPACE.
00496    2302      02  PBT5A   PICTURE X(9).
00497    23021     02  FILLER  PICTURE X VALUE SPACE.
00498    23023     02  PBT5B   PICTURE X(7).
00499    23024     02  FILLER  PICTURE XX      VALUE SPACE.
00500    2304      02  PBT6    PICTURE X(5).
00501 ** 2303      02  FILLER  PICTURE X VALUE SPACE.
00502    2305      02  FILLER  PICTURE X VALUE SPACE.
00503    023060    02  PBT7    PICTURE X(4).
00504 ** 2307      02  FILLER  PICTURE XXX VALUE SPACE.                         CM000019
00505    02308     02  PBT8    PICTURE X(5).                                    CM000019
00506 ** 2309      02  FILLER  PICTURE XXX VALUE SPACE.                         CM000019
00507    2310      02  PBT9    PICTURE X(5).
00508    2311      02  FILLER  PICTURE XXX VALUE SPACE.                         CM000019
00509    02312     02  PBT10   PICTURE X(5).                                    CM000019
00510    023130    02  FILLER  PICTURE  X(4)   VALUE SPACE.
```

10

```
00511   02314       02  PBT11   PICTURE X(4).
00512   02315       02  FILLER  PICTURE XX VALUE SPACE.
00513   02316       02  PBT12   PICTURE X(4).
00514   02317       02  FILLER  PICTURE XX  VALUE SPACE.
00515   02318       02  PBT13   PICTURE XX.                                  CM000019
00516   023190      02  FILLER  PICTURE  XX.    VALUE SPACE.
00517 ** 2320       02  PBT14   PICTURE X(4).                               CM000019
00518    2321       02  FILLER  PICTURE XX VALUE SPACE.                     CM000019
00519    2322       02  PBT15   PICTURE 9.                                  CM000019
00520    2323       02  FILLER  PICTURE XXX VALUE SPACE.                    CM000019
00521   02401   01  HK-TAB.                                                 CM000019
00522 ** 2402       02  P1  PICTURE X(9) OCCURS 6 TIMES.
00523    24021      02  P1A     PICTURE 9 OCCURS 6 TIMES.
00524    2403       02  P2  PICTURE X(19) OCCURS 6 TIMES.
00525    2404       02  P3  PICTURE X(4) OCCURS 6 TIMES.
00526    2405       02  P4  PICTURE X(9) OCCURS 6 TIMES.
00527    2406       02  P5A PICTURE X(9) OCCURS 6 TIMES.
00528    24061      02  P5B PICTURE X(7) OCCURS 6 TIMES.
00529    2407       02  P6  PICTURE X(5) OCCURS 6 TIMES.                    CM000019
00530    2408       02  P7  PICTURE X(6) OCCURS 6 TIMES.
00531    2409       02  P8  PICTURE X(5) OCCURS 6 TIMES.
00532    2410       02  P9      PICTURE X(5) OCCURS 6 TIMES.                CM000019
00533    2411       02  P10 PICTURE X(5) OCCURS 6 TIMES.
00534    2412       02  P11   PICTURE  X(4)  OCCURS 24.
00535    2413       02  P12   PICTURE  X(4)  OCCURS 24.
00536    2414       02  P13 PICTURE XX   OCCURS 6 TIMES.
00537    2415       02  P14     PICTURE X(4) OCCURS 6 TIMES.                CM000019
00538    2416       02  P15     PICTURE S9 COMPUTATIONAL-3 OCCURS 6 TIMES.
00539    2417       02  P16     PICTURE S9 COMPUTATIONAL-3 OCCURS 6 TIMES.  CM000019
00540   02501   01  FOUT-PRT.                                               CM000019
00541   02502       02  CCF     PICTURE X VALUE  '1'.                       CM000019
00542   02503       02  FILLER  PICTURE X(53) VALUE SPACE.                  CM000019
00543   02504       02  FILLER  PICTURE X(26) VALUE 'HOOKUP INFORMATION DATA   '.CM000019
00544   02505       02  FILLER  PICTURE X(53) VALUE SPACE.                  CM000019
00545   02506   01  GOUT-PRT.                                               CM000019
00546   02507       02  CCG     PICTURE X VALUE '1'.                        CM000019
00547 ** 2508       02  FILLER  PICTURE X(33) VALUE '            PATCHING - PB1
00548   025081-     '     '.
00549   025082      02  FILLER  PICTURE X(45)  VALUE SPACE.
00550   025083      02  FILLER  PICTURE X(31) VALUE '          PATCHING - PB2
00551 ** 25084-     '   '.
00552    25090      02  FILLER  PICTURE X(22)  VALUE SPACE.
00553    2510   01  O-TEMP.                                                 CM000019
00554    25101      02  O-1     PICTURE X(4).
00555    2512A      02  O-1A    PICTURE X.
00556 ** 25102      02  O-2     PICTURE X(9).                               CM000019
00557    25103      02  FILLER  PICTURE X VALUE 'C'.                        CM000019
00558    25104      02  FILLER  PICTURE X(65) VALUE SPACE.
00559    25105 01   BO-TEMP.                                                CM000019
00560    25106      02  BO-1    PICTURE X(4).
00561 ** 2510A      02  BO-1A   PICTURE X.
00562    25107      02  BO-2    PICTURE X(9).                               CM000019
00563    25108      02  FILLER  PICTURE X VALUE 'B'.                        CM000019
00564    25109      02  FILLER  PICTURE X(65) VALUE SPACE.                  CM000019
00565    2517   01  A-TEMP.                                                 CM000019
00566 **  209       02  A1    PICTURE  X(4).
00567   00210       02          A1B         PICTURE 9.                      CM000019
```

11

```
00568 ** 2101      02  A1R     REDEFINES A1B.
00569    2102      03  A1BR    PICTURE X.
00570   00211      02          A2          PICTURE X(7).                    CM000019
00571   00212      02          A3          PICTURE X.                       CM000019
00572   00213      02          A4.                                          CM000019
00573 **  214          03  A4A     PICTURE XX.                              CM000019
00574     215          03  A4B     PICTURE XX.                              CM000019
00575   002151         03  A4C     PICTURE  X.
00576 **  216      02      A4R     REDEFINES A4.                            CM000019
00577     217          03  A4AR    PICTURE X.                               CM000019
00578     218          03  A4BR    PICTURE XXX.                             CM000019
00579   002181         03  A4CR    PICTURE  X.
00580 **  219      02      A4RR    REDEFINES A4R.                           CM000019
00581     220          03  A4ARR   PICTURE XX.                              CM000019
00582    2201          03  A4BRR   PICTURE X.                               CM000019
00583    2202          03  A4CRR   PICTURE X.                               CM000019
00584   002203         03  A4DRR   PICTURE  X.
00585   00221      02          A5.                                          CM000019
00586   00222          03      A5A         PICTURE X.                       CM000019
00587   00223          03      A5B         PICTURE X(3).                    CM000019
00588   00224          03      A5C         PICTURE X.                       CM000019
00589   00225      02          A5R         REDEFINES A5.                    CM000019
00590 **  301          03      A5AR    PICTURE XX.                          CM000019
00591     302          03      A5BR    PICTURE XX.                          CM000019
00592     303          03      A5CR    PICTURE X.                           CM000019
00593   00304      02          A6          PICTURE X.                       CM000019
00594   00305      02          A7.                                          CM000019
00595   00306          03      A7A         PICTURE X.                       CM000019
00596   00307          03      A7B         PICTURE X(3).                    CM000019
00597   00308          03      A7C         PICTURE X.                       CM000019
00598   00309      02          A7R         REDEFINES A7.                    CM000019
00599 **  310          03      A7AR    PICTURE XX.                          CM000019
00600     311          03      A7BR    PICTURE XX.                          CM000019
00601     312          03      A7CR    PICTURE X.                           CM000019
00602   00313      02          A8.                                          CM000019
00603   00314          03      A8A         PICTURE X.                       CM000019
00604   00315          03      A8B         PICTURE X(3).                    CM000019
00605   00316          03      A8C         PICTURE X.                       CM000019
00606   00317      02          A8R         REDEFINES A8.                    CM000019
00607 **  317          03      A8AR    PICTURE XX.                          CM000019
00608     318          03      A8BR    PICTURE XX.                          CM000019
00609     319          03      A8CR    PICTURE X.                           CM000019
00610   00321      02          A9          PICTURE X.                       CM000019
00611   00322      02          A10.                                         CM000019
00612   00323          03      A10A        PICTURE X.                       CM000019
00613   00324          03      A10B        PICTURE X(3).                    CM000019
00614   00325          03      A10C        PICTURE X.                       CM000019
00615   00401      02          A10R        REDEFINES A10.                   CM000019
00616 ** 4011          03      A10AR   PICTURE XX.                          CM000019
00617    4012          03      A10BR   PICTURE XX.                          CM000019
00618    4013          03      A10CR   PICTURE X.                           CM000019
00619   00402      02          A11         PICTURE X.                       CM000019
00620   00403      02          A12.                                         CM000019
00621 **  404          03  A12A    PICTURE XX.                              CM000019
00622 **   05          03  A12B    PICTURE XX.                              CM000019
00623      06      02      A12R    REDEFINES A12.                           CM000019
00624      07          03  A12AR   PICTURE X.                               CM000019
```

12

```
00625      08          03  A12BR   PICTURE XXX.                                CM000019
00626     409      02      A12RR   REDEFINES A12R.                             CM000019
00627     4091         03  A12ARR  PICTURE XX.                                 CM000019
00628     4092         03  A12BRR  PICTURE X.                                  CM000019
00629     4093         03  A12CRR  PICTURE X.                                  CM000019
00630   00410      02          A13.                                            CM000019
00631   00411         03       A13A.                                           CM000019
00632   00412             04  A13C        PICTURE X.                          CM000019
00633   00413             04  A13D        PICTURE X.                          CM000019
00634   00414         03       A13B.                                           CM000019
00635   00415             04  A13E        PICTURE X.                          CM000019
00636   00416             04  A13F        PICTURE X.                          CM000019
00637 **  417      02      A14.
00638     418          03  A14A    PICTURE XX.
00639     419          03  A14B    PICTURE XX.
00640     4191     02      A14R    REDEFINES A14.                              CM000019
00641     4192         03  A14AR   PICTURE X.                                  CM000019
00642     4193         03  A14BR   PICTURE XXX.                                CM000019
00643     4194     02      A14RR   REDEFINES A14R.                             CM000019
00644     4195         03  A14ARR  PICTURE XX.                                 CM000019
00645     4196         03  A14BRR  PICTURE X.                                  CM000019
00646     4197         03  A14CRR  PICTURE X.                                  CM000019
00647   00420      02          A15.                                            CM000019
00648   00421         03       A15A.                                           CM000019
00649   00422             04  A15C        PICTURE X.                          CM000019
00650   00423             04  A15D        PICTURE X.                          CM000019
00651   00502      02          A16.                                            CM000019
00652   00506         03       A16B.                                           CM000019
00653   00507             04  A16E        PICTURE X.                          CM000019
00654   00508             04  A16F        PICTURE X.                          CM000019
00655   00509      02          A17.                                            CM000019
00656   00510         03       A17A        PICTURE XX.                         CM000019
00657   00511         03       A17B        PICTURE XX.                         CM000019
00658 **  5111     02      A17R    REDEFINES A17.
00659     5112         03  A17AR   PICTURE X.
00660     5113         03  A17BR   PICTURE XXX.
00661     5114     02      A17RR   REDEFINES A17R.
00662     5115         03  A17ARR  PICTURE XX.
00663     5116         03  A17BRR  PICTURE X.
00664     5117         03  A17CRR  PICTURE X.
00665   00512      02          A18.                                            CM000019
00666   00513         03       A18A.                                           CM000019
00667   00514             04  A18C        PICTURE X.                          CM000019
00668   00515             04  A18D        PICTURE X.                          CM000019
00669   00516         03       A18B.                                           CM000019
00670   00517             04  A18E        PICTURE X.                          CM000019
00671   00518             04  A18F        PICTURE X.                          CM000019
00672   00519      02          A19.                                            CM000019
00673 **  520          03       A19A    PICTURE X.                             CM000019
00674     521          03       A19B    PICTURE X(3).                          CM000019
00675     522          03       A19C    PICTURE X.                             CM000019
00676     523      02          A19R    REDEFINES A19.                          CM000019
00677     524          03      A19AR   PICTURE XX.                             CM000019
00678     525          03       A19BR   PICTURE XX.                            CM000019
00679     5251         03       A19CR   PICTURE X.                             CM000019
00680     601      02      A20.
00681     602          03  A20A    PICTURE XX.                                 CM000019
```

13

```
00682     6021          03  A20B     PICTURE XX.                                  CM000019
00683     6022      02      A20R     REDEFINES A20.                               CM000019
00684     6023          03  A20AR    PICTURE X.                                   CM000019
00685     6024          03  A20BR    PICTURE XXX.                                 CM000019
00686     6025      02      A20RR    REDEFINES A20R.                              CM000019
00687     6026          03  A20ARR   PICTURE XX.                                  CM000019
00688     6027          03  A20BRR   PICTURE X.                                   CM000019
00689     603           03  A20CRR   PICTURE X.                                   CM000019
00690     608       02  A21    PICTURE  X(4).
00691     609       02  A22    PICTURE  XX.
00692 **   01   01  AB-HD.                                                        CM000020
00693     202       02  A88      PICTURE  X  VALUE '0'.                           CM000020
00694     203       02  FILLER   PICTURE X(26) VALUE '      C                    '.CM000020
00695     204       02  FILLER   PICTURE X(26) VALUE '                  TYPE     '.CM000020
00696     205       02  FILLER   PICTURE X(26) VALUE '      FROM                 '.CM000020
00697     206       02  FILLER   PICTURE X(26) VALUE '      TO                 US'.CM000020
00698     207       02  FILLER   PICTURE X(26) VALUE 'EO FOR     TEST           '.CM000020
00699     208       02  FILLER   PICTURE XX VALUE SPACE.                          CM000020
00700     2081 01   ABB-HD.                                                       CM000020
00701     2082      02  AB88     PICTURE X VALUE ' '.                             CM000020
00702     2083      02  FILLER   PICTURE X(26) VALUE 'CARD  C  IDEN.   DESCRIPTI'.CM000020
00703     2084      02  FILLER   PICTURE X(26) VALUE 'ON                 CODE   D'.CM000020
00704     2085      02  FILLER   PICTURE X(26) VALUE 'EVICE      DEVICE PT     OE'.CM000020
00705     2086      02  FILLER   PICTURE X(26) VALUE 'VICE       DEVICE PT     PA'.CM000020
00706     2087      02  FILLER   PICTURE X(26) VALUE 'RAMETER    CELL           '.CM000020
00707     2088      02  FILLER   PICTURE XX VALUE SPACE.                          CM000020
00708 **  208A 01   ABBB-HD.                                                      CM000020
00709     2088      02  FILLER   PICTURE X VALUE 'I'.                             CM000020
00710     208C      02  FILLER   PICTURE X(63) VALUE SPACE.                       CM000020
00711     208D      02  FILLER   PICTURE X(6) VALUE 'B-FILE'.                     CM000020
00712     208F      02  FILLER   PICTURE X(63) VALUE SPACE.                       CM000020
00713 **   09   01  BB-HD.                                                        CM000020
00714      10       02  B8B      PICTURE X VALUE '0'.                             CM000020
00715      12       02  B1H      PICTURE X(4).                                    CM000020
00716     213       02  FILLER   PICTURE XX VALUE SPACE.                          CM000020
00717 **   14       02  B2H      PICTURE X.
00718     215       02  FILLER   PICTURE XX VALUE SPACE.                          CM000020
00719 **   16       02  B3H      PICTURE X(5).                                    CM000020
00720      17       02  FILLER   PICTURE X(3) VALUE SPACE.                        CM000020
00721      18       02  B4H      PICTURE X(24).                                   CM000020
00722 **   15       02  FILLER   PICTURE X(3) VALUE SPACE.                        CM000020
00723      20       02  B5H      PICTURE X(4).                                    CM000020
00724 **   13       02  FILLER   PICTURE X(3) VALUE SPACE.                        CM000020
00725      22       02  B6H      PICTURE X(9).                                    CM000020
00726     219       02  FILLER   PICTURE X(3) VALUE SPACE.                        CM000020
00727 **   24       02  B7H      PICTURE X(7).                                    CM000020
00728 **   21       02  FILLER   PICTURE X(6) VALUE SPACE.                        CM000020
00729 **   01       02  B8H      PICTURE X(9).                                    CM000020
00730      25       02  FILLER   PICTURE X(4) VALUE SPACE.                        CM000020
00731 **   03       02  B9H      PICTURE X(7).                                    CM000020
00732     325       02  FILLER   PICTURE X(6) VALUE SPACE.                        CM000020
00733 **   05       02  B10H     PICTURE X(9).                                    CM000020
00734 **   04       02  FILLER   PICTURE X(4) VALUE SPACE.                        CM000020
00735      07       02  B11H     PICTURE X.                                       CM000020
00736     408       02  FILLER   PICTURE X(16) VALUE SPACE.                       CM000020
00737 **   17   01  AA-HD.                                                        CM000020
00738     118       02  AAA      PICTURE X VALUE '0'.                             CM000020
```

14

```
00739      119       02  FILLER  PICTURE X(26) VALUE 'TYP  C   TRANSDUCER   I    '.CM000020
00740      120       02  FILLER  PICTURE X(5) VALUE  'CABLE'.
00741      121       02  FILLER  PICTURE X(38) VALUE SPACE.                        CM000020
00742      122       02  FILLER  PICTURE X(26) VALUE '    WIRED P.B.  SIG.  P.B.'.CM000020
00743      123       02  FILLER  PICTURE X(26) VALUE '  P.B.  SIG.  P.B.        '.CM000020
00744      124       02  FILLER  PICTURE X(11) VALUE ' REC.  CAB '.                CM000020
00745      132  01   AAA-HD.                                                      CM000020
00746 **   125       02  AAAA    PICTURE X VALUE ' '.                              CM000020
00747      126       02  FILLER  PICTURE X(26) VALUE 'NO.  C   TYPE         C    '.CM000020
00748      127       02  FILLER  PICTURE X(26) VALUE 'TYPE    SIGNAL ROUTING     '.
00749      128       02  FILLER  PICTURE X(26) VALUE '                    S.C.  '.
00750      129       02  FILLER  PICTURE X(26) VALUE ' O I   COND  O I   O I   C'.CM000020
00751      130       02  FILLER  PICTURE X(26) VALUE 'OND  O I   JB     ELEC  FA'.CM000020
00752      131       02  FILLER  PICTURE XX   VALUE  'B '.                         CM000020
00753      133  01   AAAA-HD.                                                      CM000020
00754      134       02  AAAA-H  PICTURE  X   VALUE '1'.
00755      135       02  FILLER  PICTURE X(63) VALUE SPACE.                        CM000020
00756      136       02  FILLER  PICTURE X(6) VALUE 'A-FILE'.                      CM000020
00757      137       02  FILLER  PICTURE X(63) VALUE SPACE.                        CM000020
00758 **    01  01   BA-HD.                                                       CM000020
00759      011       02  BAA     PICTURE X VALUE '0'.                              CM000020
00760                02  A1H     PICTURE  X(4).
00761                02  FILLER  PICTURE  X  VALUE SPACE.
00762       05       02  A18H    PICTURE X.
00763                02  FILLER   PICTURE  XXX    VALUE SPACE.
00764       07       02  A2H     PICTURE X(7).                                     CM000020
00765                02  FILLER   PICTURE  X(6)   VALUE SPACE.
00766       09       02  A3H     PICTURE X.                                        CM000020
00767                02  FILLER   PICTURE  XXX    VALUE SPACE.
00768       11       02  A4H     PICTURE X(5).                                     CM000020
00769                02  FILLER   PICTURE  XX     VALUE SPACE.
00770       13       02  A5H     PICTURE X(5).                                     CM000020
00771       15       02  A6H     PICTURE X.                                        CM000020
00772       17       02  A7H     PICTURE X(5).                                     CM000020
00773       19       02  A8H     PICTURE X(5).                                     CM000020
00774       21       02  A9H     PICTURE X.                                        CM000020
00775       23       02  A10H    PICTURE X(5).                                     CM000020
00776       25       02  A11H    PICTURE X.                                        CM000020
00777 **    241      02  FILLER  PICTURE  X(14) VALUE SPACE.
00778                02  FILLER   PICTURE  XXX    VALUE SPACE.
00779                02  A12H    PICTURE X(4).
00780                02  FILLER   PICTURE  XX     VALUE SPACE.
00781                02  A13H    PICTURE X(4).
00782                02  FILLER   PICTURE  XX     VALUE SPACE.
00783                02  A14H    PICTURE X(4).
00784                02  FILLER   PICTURE  XX     VALUE SPACE.
00785                02  A15H    PICTURE X(4).
00786                02  FILLER   PICTURE  XX     VALUE SPACE.
00787                02  A16H    PICTURE X(4).
00788                02  FILLER   PICTURE  XX     VALUE SPACE.
00789                02  A17H    PICTURE X(4).
00790                02  FILLER   PICTURE  XX     VALUE SPACE.
00791                02  A18H    PICTURE X(4).
00792                02  FILLER   PICTURE  XX     VALUE SPACE.
00793                02  A19H    PICTURE X(5).
00794                02  FILLER   PICTURE  XX     VALUE SPACE.
00795                02  A20H    PICTURE X(4).
```

15

```
00796                 02  FILLER  PICTURE  X  VALUE SPACE.
00797                 02  A21H    PICTURE  X(4).
00798 **    01  01    AC-HD.                                                  CM000020
00799       502       02  ACC     PICTURE X VALUE '0'.                        CM000020
00800       503       02  FILLER  PICTURE X(26) VALUE '  TEST   T-DUCER      '.CM000020
00801       504       02  FILLER  PICTURE X(26) VALUE '        B   USED FOR  '.CM000020
00802       505       02  FILLER  PICTURE X(26) VALUE '                B   UDC '.CM000020
00803       506       02  FILLER  PICTURE X(26) VALUE '  R  POS. RN       NEG. R'.CM000020
00804       507       02  FILLER  PICTURE X(26) VALUE 'N         RE-CAL       '.CM000020
00805       508       02  FILLER  PICTURE XX VALUE SPACE.                     CM000020
00806       509  01    ACC-HD.                                                 CM000020
00807       510       02  ACCC    PICTURE X VALUE ' '.                        CM000020
00808       511       02  FILLER  PICTURE X(26) VALUE '  CELL    TYPE     RANGE '.CM000020
00809       512       02  FILLER  PICTURE X(26) VALUE '  UNITS C   PARAMETER   TR'.CM000020
00810       513       02  FILLER  PICTURE X(26) VALUE 'AN MFG.   I-NO.  C   CARD '.CM000020
00811       514       02  FILLER  PICTURE X(26) VALUE '  N  EQUIV.        EQUIV.'.CM000020
00812       515       02  FILLER  PICTURE X(26) VALUE '  UNITS   DATE         '.CM000020
00813       516       02  FILLER  PICTURE XX VALUE SPACE.                     CM000020
00814       517  01    ACCC-HD.                                                CM000020
00815       518       02  CCCC    PICTURE X VALUE '1'.                        CM000020
00816       519       02  FILLER  PICTURE X(63) VALUE SPACE.                  CM000020
00817       520       02  FILLER  PICTURE X(6) VALUE 'C-FILE'.                CM000020
00818       521       02  FILLER  PICTURE X(63) VALUE SPACE.                  CM000020
00819 **    09  01    BC-HD.                                                  CM000020
00820        10       02  BCC     PICTURE X VALUE '0'.                        CM000020
00821                 02  FILLER      PICTURE XXXX  VALUE SPACE.
00822                 02  C1H          PICTURE X.
00823                 02  FILLER      PICTURE XX  VALUE SPACE.
00824        15       02  FILLER  PICTURE X(3) VALUE SPACE.                   CM000020
00825        16       02  C3H     PICTURE X(7).                               CM000020
00826                 02  FILLER  PICTURE XXX   VALUE SPACE.
00827       718       02  C4AH    PICTURE X(7).                               CM000020
00828       7181      02  FILLER  PICTURE X VALUE SPACE.                      CM000020
00829       7182      02  C48H    PICTURE X(3).                               CM000020
00830       7183      02  FILLER  PICTURE XXX VALUE SPACE.                    CM000020
00831       7184      02  C4CH    PICTURE X.                                  CM000020
00832       719       02  FILLER  PICTURE X(3) VALUE SPACE.                   CM000020
00833 **     20       02  C5H     PICTURE X(9).                               CM000020
00834        21       02  FILLER  PICTURE X(3) VALUE SPACE.                   CM000020
00835       722       02  C6H     PICTURE X(9).                               CM000020
00836       723       02  FILLER  PICTURE XXX VALUE SPACE.                    CM000020
00837       7231      02  C7AH    PICTURE X(6).                               CM000020
00838       7232      02  FILLER  PICTURE X VALUE SPACE.                      CM000020
00839       7233      02  C7BH    PICTURE X.                                  CM000020
00840 **     25       02  FILLER  PICTURE X(3) VALUE SPACE.                   CM000020
00841 **     01       02  C8H     PICTURE X(4).                               CM000020
00842        02       02  FILLER  PICTURE X(3) VALUE SPACE.                   CM000020
00843       703       02  C98H    PICTURE X.                                  CM000020
00844 **     04       02  FILLER  PICTURE XX VALUE SPACE.                     CM000020
00845       705       02  C10AH   PICTURE X(9).
00846       7051      02  FILLER  PICTURE X VALUE SPACE.                      CM000020
00847       706       02  FILLER  PICTURE X(4) VALUE SPACE.                   CM000020
00848       707       02  C11AH   PICTURE X(9).
00849       7071      02  FILLER  PICTURE X VALUE SPACE.                      CM000020
00850       7072      02  C11BH   PICTURE X(3).                               CM000020
00851       708       02  FILLER  PICTURE X(5) VALUE SPACE.                   CM000020
00852       709       02  C12H    PICTURE X(6).                               CM000020
```

16

```
00853     710        02  FILLER  PICTURE  XX  VALUE SPACE.                    CM000020
00854                 02  FILLER   PICTURE X(8)  VALUE SPACE.
00855   02501  PROCEDURE DIVISION.
00856                 OPEN I-O B-FILE.
00857                 READ B-FILE AT END GO TO I7-END.
00858                  MOVE B11 TO TSTCELL.
00859                 CLOSE B-FILE.
00860   02502         OPEN INPUT I-FILE.
00861   025030        OPEN OUTPUT PRT-A PRT-B.
00862   025040        READ I-FILE AT END GO TO I-END.
00863                 MOVE OPT-LISTC TO IFCLIST.
00864   025050        IF CK-OPTT = '0' GO TO OPT-RERUN.
00865   025060        GO TO NO-OPTN.
00866   025070 OPT-RERUN.
00867   025080        OPEN INPUT NPATCHI NHOOKI.
00868   025090 ORNL.
00869   025100        READ NPATCHI AT END GO TO ORAU.
00870   025110        WRITE PAT-PRT FROM NPATI.
00871   025120        GO TO ORNL.
00872   025130 ORAU.
00873   025140        READ NHOOKI AT END GO TO ALLNHO.
00874   025150        WRITE HK-PRT FROM NOOKI.
00875   025160        GO TO ORAU.
00876   025170 ALLNHO.
00877   025180        CLOSE NPATCHI NHOOKI.
00878   025190 NO-OPTN.
00879                 MOVE OPT-CALDATE TO O-CALDATE.
00880                 MOVE '9999' TO M-ST1 M-ST2 M-ST3 M-ST4 M-ST5 M-ST6.
00881   02603  A-OPEN.                                                        CM000019
00882   02604         OPEN INPUT A-FILE.                                      CM000019
00883   02605  I-READ.                                                        CM000019
00884 ** 2606         READ I-FILE AT END GO TO I-END.
00885   026060 IREOON.
00886 ** 26061        MOVE I12 TO ITEM-NO.
00887   02607  A-READ.                                                        CM000019
00888 ** 2608         READ A-FILE AT END GO TO A-END.
00889    26081 A-ON. MOVE A-CARD TO A-TEMP.
00890    2609         IF A1 NOT = I4 GO TO A-READ.
00891    26091        IF A1BR NOT = SPACE GO TO CONT-ON.
00892    26092        IF THRU-SW = 0 MOVE 1 TO A1B.
00893    26093 CONT-ON. MOVE A1B TO THRU-SW.
00894    26094        MOVE A-CARD TO ALN (THRU-SW).
00895    2610         MOVE A1B TO P-CNT. SUBTRACT 1 FROM P-CNT.
00896    2611         PERFORM LINE-UP THRU LEX UNTIL P-CNT < 1.
00897    26111        GO TO C-SET-UP.                                         CM000019
00898    2612   LINE-UP.
00899    26121        PERFORM A-READ. MOVE A-CARD TO ALN (P-CNT).
00900    26122        SUBTRACT 1 FROM P-CNT.
00901    2614   LEX. EXIT.
00902    2615   C-SET-UP. MOVE A1B TO AL-SUB.
00903    26151        CLOSE A-FILE.                                           CM000019
00904 ** 26151        MOVE ZERO TO Z-TOT.
00905    2616         PERFORM CLEAHK THRU HKAEXIT UNTIL Z-TOT > 5. GO TO CLEAPAT.
00906    2617   CLEAHK. ADD 1 TO Z-TOT. MOVE ZERO TO P15 (Z-TOT).
00907    26171        MOVE SPACE TO P1 (Z-TOT) P2 (Z-TOT) P3 (Z-TOT) P4 (Z-TOT)
00908    26172        P5A (Z-TOT) P5B (Z-TOT) P6 (Z-TOT) P7 (Z-TOT)
00909 ** 26172        P8 (Z-TOT) P9 (Z-TOT)
```

17

```
00910    26173      P10 (Z-TOT) P11 (Z-TOT) P12 (Z-TOT) P13 (Z-TOT) P14 (Z-TOT)
00911    26174      MOVE ZERO TO P1A (Z-TOT).
00912    2618  HKAEXIT. EXIT.
00913    2619  CLEAPAT. MOVE ZERO TO Z-TOT.
00914    2620       PERFORM BLEAPAT THRU PTREXA UNTIL Z-TOT > 5. GO TO XXA.
00915    2621  BLEAPAT. ADD 1 TO Z-TOT. MOVE ZERO TO QPRTO (Z-TOT).
00916    26211      MOVE ZERO TO QPRTB (Z-TOT).
00917    2622  PTREXA. EXIT.
00918    2623  XXA. MOVE ZERO TO Z-TOT.
00919    2624       PERFORM XXB THRU XXC UNTIL Z-TOT > 95. GO TO C-OPEN.
00920    2625  XXB. ADD 1 TO Z-TOT. MOVE ZERO TO APT5 (Z-TOT).
00921    26252      MOVE SPACE TO APT1 (Z-TOT) APT2 (Z-TOT) APT3 (Z-TOT)
00922    26253      APT4 (Z-TOT).
00923 ** 26251      MOVE ZERO TO APT1A (Z-TOT).
00924    2626  XXC. EXIT.
00925    2701  C-OPEN.   OPEN I-O C-FILE.
00926   027021      IF A2 = 'TC/CA  '
00927   027022      OR A2 = 'TC/CC  '
00928   027023      OR A2 = 'TC/IC  '
00929 **027023      OR A2 = 'EVENT-1'
00930 **027023      OR A2 = 'BRK    '
00931 **027023      OR A2 = 'WIRE   '
00932 **027023      OR A2 = 'CONTCLO'
00933               OR A2 = 'USER   '
00934               OR A2 = 'TC/CHCN'
00935 **027023      OR A2 = 'C-SHUNT'
00936               OR A2 = 'TUBE   '
00937   027024      OR A2 = 'V-LEADS'
00938 ** 27025      OR A2 = 'SV-LEAD' ADD 1 TO HK-SUB
00939    27026      MOVE I1 TO P1 (HK-SUB)
00940    27027      MOVE I3 TO P2 (HK-SUB)
00941   027027      PERFORM TC-CHK
00942   02702B      CLOSE C-FILE  MOVE 1 TO CF-SW  GO TO ASQ-LK.
00943 **027011      IF I5 = SPACE AND I6 = SPACE NEXT SENTENCE
00944   027022      ELSE GO TO C-READ.
00945   027029      MOVE 0 TO CF-SW.
00946 ** 2702  C-READ. READ C-FILE AT END GO TO C-END.
00947               IF C9 NOT = '0' GO TO C-READ.
00948    27030      IF A2 NOT = C3 GO TO C-READ.
00949    27031      IF C5 NOT = SPACE GO TO C-READ.
00950   027031      IF C12 = SPACE GO TO C-READ1.
00951   027032      IF C12C < O-CYR GO TO C-READ.
00952 ** 27033      IF C12C > O-CYR GO TO C-READ1.
00953    27034      IF C12A < O-CMO GO TO C-READ.
00954    27035      IF C12A > O-CMO GO TO C-READ1.
00955    27036      IF C12B < O-CDY GO TO C-READ.
00956    27037 C-READ1.
00957    27038      IF I6A = 'R' GO TO CBSGN.
00958    2704       IF I6A = 'I' GO TO CCSGN. IF I6A NOT = SPACE MOVE 111 TO BEA CM000019
00959               MOVE 1 TO CF-SW
00960    2705       MOVE I1 TO BEB PERFORM B-WRIT CLOSE C-FILE GO TO R-EXT.      CM000019
00961    2706  CDSGN. IF I5 = SPACE GO TO C-TABLE. IF I5 NOT = C6 GO TO C-READ.
00962    2707       GO TO C-TABLE.
00963    2708  CBSGN. IF C5 NOT = SPACE GO TO C-READ. IF I5 = SPACE GO TO CBRGN.CM000019
00954    2709       IF I6RB NOT = C4A OR I6RC NOT = C4B OR I6RD NOT = C4C GO TO  CM000019
00965    2710 -     C-READ. IF I5 NOT = C6 GO TO C-READ. GO TO C-TABLE.          CM000019
00966    2711  CBRGN. IF I6RB NOT = C4A OR I6RC NOT = C4B OR I6RD NOT = C4C GO  CM000019
```

18

```
00967    2712 -     TO C-READ. GO TO C-TABLE.                                  CM000019
00968    2713  CCSGN.  IF I6B NOT = C7A GO TO C-READ. IF C5 NOT = SPACE MOVE
00969    2714       I1 TO AEA MOVE C5 TO AEB PERFORM A-WRIT GO TO R-EXT.
00970    27141      IF 16E NOT = C7B GO TO C-READ.
00971    2715       GO TO C-TABLE.
00972   027151 TC-CHK.
00973   027152      IF A2 = 'TC/CC  ' MOVE A2 TO P4 (HK-SUB).
00974   027153      IF A2 = 'TC/IC  ' MOVE A2 TO P4 (HK-SUB).
00975   027154      IF A2 = 'TC/CA  ' MOVE A2 TO P4 (HK-SUB).
00976 **027154      IF A2 = 'BRK    ' MOVE A2 TO P4 (HK-SUB).
00977 **027154      IF A2 = 'WIRE   ' MOVE A2 TO P4 (HK-SUB).
00978 **027154      IF A2 = 'CONTCLO' MOVE A2 TO P4 (HK-SUB).
00979 **027154      IF A2 = 'C-SHUNT' MOVE A2 TO P4 (HK-SUB).
00980               IF A2 = 'USER   ' MOVE A2 TO P4 (HK-SUB).
00981               IF A2 = 'TC/CHCN' MOVE A2 TO P4 (HK-SUB).
00982   027155      IF A2 = 'EVENT-1' MOVE 'EVENT' TO P4 (HK-SUB).
00983 ** 2716  A-WRIT.  DISPLAY '(-CARD ' AEA.
00984    27161          DISPLAY 'INSTR ASSIGNED TO ' AEB.
00985    2717  B-WRIT.  DISPLAY 'ERROR AT ' BEA.
00986    27171          DISPLAY 'ON INPUT ' BEB.
00987    2720  C-WRIT.  DISPLAY 'INST. N/A IN ' CEA.
00988    2721           DISPLAY ' AT ' CEB.
00989    27211 EJECT-A. WRITE HK-PRT FROM COUT-PRT AFTER CCC.
00990    27212      WRITE HK-PRT FROM DOUT-PRT AFTER CCD. MOVE 3 TO LN-CTR.
00991    27213 A-END. MOVE 600 TO BEA. MOVE I1 TO BEB. PERFORM B-WRIT.          CM000019
00992    27214      CLOSE A-FILE. GO TO R-EXT.
00993   02801  C-TABLE.                                                         CM000019
00994 ** 2810  CNOT-U. ADD 1 TO HK-SUB.
00995    28102      MOVE A21 TO P12 (HK-SUB).
00996    28104      MOVE 1 TO P15 (HK-SUB).
00997    28105      MOVE THRU-SW TO P1A (HK-SUB)                               CM000019
00998    28106      MOVE THRU-SW TO P16 (HK-SUB)                               CM000019
00999    2811       MOVE I4 TO P11 (HK-SUB). MOVE I11 TO P13 (HK-SUB).
01000    28111      MOVE ITEM-NO TO P14 (HK-SUB).
01001    2812       MOVE I1 TO P1 (HK-SUB). MOVE I3 TO P2 (HK-SUB).
01002    2813       MOVE C7A TO P4 (HK-SUB). MOVE C1 TO P3 (HK-SUB).           CM000019
01003    2814       MOVE C8 TO P7 (HK-SUB). MOVE '1' TO C-SW.
01004               MOVE TSTCELL TO C1.
01005 ** 28011      MOVE I1 TO C5.  REWRITE C-CARD.
01006               CLOSE C-FILE.
01007               MOVE 1 TO CF-SW
01008    28141      GO TO ASQ-LK.
01009    2815  C-END.
01010    28152      DISPLAY 'A-FILE ' A-TEMP.
01011 ** 28151      DISPLAY 'C-FILE' C-CARD.
01012    28153      DISPLAY 'I-FILE ' I-CARD.
01013    28154      CLOSE C-FILE.
01014               MOVE 1 TO CF-SW
01015    2816       MOVE 201 TO CEB.
01016   02817       MOVE I1 TO CEA. PERFORM C-WRIT. GO TO I-7.                 CM000019
01017 ** 2901  ASQ-LK. MOVE ALN (THRU-SW ) TO SQCK-LN.
01018                  IF SQUID-COUNT NOT = 0 GO TO I-7.
01019   02910  SQ-CK.                                                          CM000019
01020 ** 2911      IF A135A = 'S' AND A135B NOT = SPACE MOVE A13RB TO           CM000019
01021    29111      SQUID-COUNT MOVE THRU-SW TO S-ST1 MOVE 1 TO O-SW1 GO TO I7ZZ.
01022    2912       IF A155A = 'S' AND A155B NOT = SPACE MOVE A15RB TO          CM000019
01023    29121      SQUID-COUNT MOVE THRU-SW TO S-ST1 MOVE 1 TO O-SW2 GO TO I7ZZ.
```

19

```
01024    2914      IF A185A = 'S' AND A185B NOT = SPACE MOVE A18RB TO          CM000019
01025    29141     SQUID-COUNT MOVE THRU-SW TO S-ST1 MOVE 1 TO O-SW4 GO TO I7ZZ.
01026    29142      GO TO I-7.
01027    29143 I7ZZ. SUBTRACT 1 FROM SQUID-COUNT.
01028   030010 I-7.                                                           CM000019
01029   030020     MOVE 0 TO PB-SW1, PB-SW2, STA-SW.                          CM000019
01030              MOVE A21 TO P12 (HK-SUB).
01031              MOVE I4 TO P11 (HK-SUB).
01032               MOVE I11 TO P13 (HK-SUB).
01033              MOVE ITEM-NO TO P14 (HK-SUB).
01034              MOVE 1 TO P15 (HK-SUB)
01035   030021     MOVE THRU-SW TO P16 (HK-SUB)  P1A (HK-SUB)
01036   030022     MOVE I1 TO P1 (HK-SUB).
01037   030030     IF I7 = SPACE                                              CM000019
01038   030040     IF A12 = SPACE                                             CM000019
01039   030050     IF A4A NOT = 'CB' GO TO CHOSW
01040   030070     ELSE GO TO I7JA                                            CM000019
01041   030080     ELSE GO TO I7KA.                                           CM000019
01042   030090     IF I7C = SPACE                                             CM000019
01043   030100     IF A12B = SPACE                                            CM000019
01044   030110     IF A4B = SPACE                                             CM000019
01045   030120     MOVE I7A TO ST-1                                           CM000019
01046   030130     GO TO B7-OPEN                                              CM000019
01047   030140     ELSE MOVE I7AR TO ST-1                                     CM000019
01048   030150          MOVE A4B TO ST-3                                      CM000019
01049   030160          ALTER I7AA TO PROCEED TO I7CA                         CM000019
01050 ** 3017      MOVE 2 TO FLIP-SW
01051   030180          GO TO B7-OPEN                                         CM000019
01052   030190     ELSE MOVE I7AR TO ST-1                                     CM000019
01053   030200          MOVE A12B TO ST-3                                     CM000019
01054   030210          ALTER I7AA TO PROCEED TO I7CA                         CM000019
01055   030220          MOVE 3 TO FLIP-SW                                     CM000019
01056   030230          GO TO B7-OPEN.                                        CM000019
01057   030240     IF I7D = SPACE                                             CM000019
01058 ** 30250     IF A12BR = SPACE
01059    3101      IF A4BR = SPACE
01060   031020         MOVE I7AR TO ST-1                                      CM000019
01061   031030         MOVE I7C  TO ST-5                                      CM000019
01062 ** 31031     MOVE 2 TO FLIP-SW
01063   031040         ALTER I7AA TO PROCEED TO I7FA                          CM000019
01064   031050         GO TO B7-OPEN                                          CM000019
01065   031060     ELSE MOVE I7AR TO ST-1                                     CM000019
01066   031070         MOVE I7C  TO ST-5                                      CM000019
01067 ** 3108      MOVE A4BR TO ST-6
01068   031090          ALTER I7AA TO PROCEED TO I7EA                         CM000019
01069   031100          MOVE 2 TO FLIP-SW                                     CM000019
01070   031110          GO TO B7-OPEN                                         CM000019
01071   031120     ELSE MOVE I7AR TO ST-1                                     CM000019
01072   031130          MOVE I7C  TO ST-5                                     CM000019
01073 ** 3114      MOVE A12BR TO ST-6
01074   031150          MOVE 2 TO FLIP-SW                                     CM000019
01075   031160          ALTER I7AA TO PROCEED TO I7EA                         CM000019
01076   031170          GO TO B7-OPEN.                                        CM000019
01077   031180     IF I7E = SPACE                                             CM000019
01078   031190         MOVE I7AR TO ST-1                                      CM000019
01079   031200         MOVE I7BR TO ST-3                                      CM000019
01080   031210         ALTER I7AA TO PROCEED TO I7CA                          CM000019
```

20

```
01081   031220          MOVE 3 TO FLIP-SW                                CM000019
01082   031230          GO TO B7-OPEN.                                   CM000019
01083   031240         MOVE I7 TO ST-7                                   CM000019
01084   031250         ALTER 17AA TO PROCEED TO 17GA                     CM000019
01085   032010         MOVE 2 TO FLIP-SW                                 CM000019
01086   032020         GO TO B7-OPEN.                                    CM000019
01087   032021 CHOSW.
01088   032022      IF O-SW1 = 1 OR O-SW2 = 1 OR O-SW4 = 1
01089   032023      IF SQUID-COUNT = 0 MOVE 1 TO I7-SWT
01090   032024      ELSE GO TO I-B
01091 **032023      ELSE MOVE 1 TO I7-SWT GO TO I-8.
01092 ** 32024      GO TO I-8.
01093   032030 I7JA.                                                     CM000019
01094   032040      IF A4B = SPACE                                       CM000019
01095   032050      MOVE A4A TO ST-1    MOVE 2 TO FLIP-SW                CM000019
01096   032060      GO TO B7-OPEN.                                       CM000019
01097   032070      MOVE A4 TO ST-2     MOVE 2 TO FLIP-SW                CM000019
01098   032080      ALTER I7AA TO PROCEED TO 17BA                        CM000019
01099   032090      GO TO B7-OPEN.                                       CM000019
01100   032100 17KA.                                                     CM000019
01101   032110      IF A12B = SPACE                                      CM000019
01102   032120      MOVE A12A TO ST-1                                    CM000019
01103   032130      MOVE 2 TO FLIP-SW                                    CM000019
01104   032140      GO TO B7-OPEN.                                       CM000019
01105   032150      MOVE A12 TO ST-2                                     CM000019
01106   032160      ALTER I7AA TO PROCEED TO I7BA                        CM000019
01107   032170      MOVE 1 TO FLIP-SW                                    CM000019
01108   032180      GO TO B7-OPEN.                                       CM000019
01109   032190 17GA.                                                     CM000019
01110   032200      IF ST-7 = B3                                         CM000019
01111   032220      GO TO BTAB-LK.                                       CM000019
01112   032230      GO TO B7-RD.                                         CM000019
01113   032240 I7FA.                                                     CM000019
01114   032250      IF ST-1 = B5A                                        CM000019
01115   033010      IF ST-5 = B5BRR                                      CM000019
01116   033030      GO TO BTAB-LK.                                       CM000019
01117   033040      GO TO B7-RO.                                         CM000019
01118   033050 I7EA.                                                     CM000019
01119   033060      IF ST-1 = B5A                                        CM000019
01120   033070      IF ST-5 = B5BRR                                      CM000019
01121   033080      IF ST-6 = B5CRR                                      CM000019
01122   033100      GO TO BTAB-LK.                                       CM000019
01123   033110      GO TO B7-RO.                                         CM000019
01124   033120 17DA.                                                     CM000019
01125   033130      IF ST-1 = B3RA                                       CM000019
01126   033140      IF ST-3 = B3RB                                       CM000019
01127   033160      GO TO BTAB-LK.                                       CM000019
01128   033170      GO TO B7-RO.                                         CM000019
01129   033180 I7CA.                                                     CM000019
01130   033190      IF ST-1 = B5A                                        CM000019
01131   033200      IF ST-3 = B5B                                        CM000019
01132   033220      GO TO BTAB-LK.                                       CM000019
01133   033230      GO TO B7-RO.                                         CM000019
01134   033240 I7BA.                                                     CM000019
01135   033250      IF ST-2 = B5                                         CM000019
01136   034020      GO TO BTAB-LK.                                       CM000019
01137   034030      GO TO B7-RO.                                         CM000019.
```

21

```
01138   034040 B7-OPEN.                                                  CM000019
01139 ** 3405        OPEN I-O B-FILE.
01140   034060 B7-RO.                                                    CM000019
01141   034070       READ B-FILE AT END GO TO I7-END.                    CM000019
01142 ** 34071       IF B10 NOT = SPACE GO TO B7-RO.
01143   034080 I7AA.                                                     CM000019
01144   034090       GO TO I7HA.                                         CM000019
01145   034100 I7HA.                                                     CM000019
01146   034110       IF ST-1 = B5A                                       CM000019
01147   034130       GO TO BTAB-LK.                                      CM000019
01148   034140       GO TO B7-RO.                                        CM000019
01149   034150 BTAB-LK.                                                  CM000019
01150   034160       PERFORM B-TABLE.                                    CM000019
01151   034170 CHK-I789.                                                 CM000019
01152   034180       IF STA-SW = 1 GO TO PB-SET.                         CM000019
01153   034190       IF STA-SW = 2 GO TO EPB-SET.                        CM000019
01154   034200       IF STA-SW = 3 GO TO KPB-SET.                        CM000019
01155   034210       IF B6B = 'PB1'  OR B6B = 'PB2'                      CM000019
01156   034220       MOVE B6B TO B-ST                                    CM000019
01157   034230       MOVE 1 TO PB-SW1.                                   CM000019
01158   034240       IF B8B = 'PB1' OR B8B = 'PB2'                       CM000019
01159   034250       MOVE B8B TO B-ST                                    CM000019
01160   035010       MOVE 1 TO PB-SW2.
01161   035020       IF PB-SW1 = 1                                       CM000019
01162   035040       MOVE 71 TO CEB MOVE 11 TO CEA PERFORM C-WRIT GO TO B7-RO.  CM000019
01163   035080       IF PB-SW2 NOT = 1 GO TO HK-I789.
01164   035090       ADD 1 TO APT-SUB                                    CM000019
01165   035100       MOVE B-ST TO APT2 (APT-SUB)                         CM000019
01166   035110       MOVE B9  TO  APT3 (APT-SUB)                         CM000019
01167   035120       PERFORM PAT-M.                                      CM000019
01168 **035013       IF THRU-SW NOT = S-ST1 GO TO HK-I789.
01169 ** 35014       IF O-SW1 = 1
01170   035015       MOVE B-ST TO S-ST2  MOVE 2 TO APT5 (APT-SUB).
01171   035016 HK-I789.
01172   035017       IF B3RRB = '0' OR '1' OR '2' OR '3' OR '4' OR '5' OR '6'
01173   03501B       OR '7' OR '8' OR '9' GO TO PAHK-I789.
01174   035019       IF M-SW1 = 0 MOVE 1 TO M-SW1 MOVE B3 TO M-1ST.
01175   035020 PAHK-I789.
01176 ** 3513        IF B5A NOT = 'CB' MOVE B3 TO P6 (HK-SUB).           CM000019
01177   035140       MOVE B6 TO P5A (HK-SUB)                             CM000019
01178   035150       MOVE B7 TO P5B (HK-SUB)                             CM000019
01179 **035060       IF BSW-1 = 1 PERFORM B-UPDATE                       CM000019
01180   03507        ELSE GO TO B7-RO.
01181   035160       CLOSE B-FILE                                        CM000019
01182   035170       GO TO I-8.                                          CM000019
01183   035180 SQUID-ROUTINE.                                            CM000019
01184   035190       ADD 1 TO SQ-SUB.                                    CM000019
01185   035200       MOVE 'SQUID' TO QPRTC (SQ-SUB).                     CM000019
01186   035210       MOVE THRU-SW TO QPRTB (SQ-SUB).                     CM000019
01187   035220       MOVE 1 TO QPRTD (SQ-SUB).                           CM000019
01188   035221       MOVE ITEM-NO TO QPRTA (SQ-SUB).
01189   035230 PAT-M.                                                    CM000019
01190   035240       MOVE ITEM-NO TO APT1 (APT-SUB)                      CM000019
01191   035250       MOVE THRU-SW TO APT1A (APT-SUB)                     CM000019
01192   35A010       MOVE 1 TO APT5 (APT-SUB).                           CM000019
01193   35A020 B-UPDATE.                                                 CM000019
01194                IF B1 = SPACE MOVE 'XXXX' TO B1.
```

22

```
35A030      MOVE I1 TO B10.  REWRITE B-CARD.
35A080 BT-UPOATE.                                                    CM000019
            IF BT1 = SPACE MOVE 'XXXX' TO BT1.
35A090      CLOSE B-FILE.  OPEN I-O B-FILE.
35A091      PERFORM BT-UPOATT THRU BT-UPOATTT.
35A092 BT-UPOATT.
35A093      READ B-FILE AT END GO TO BT-UPOATTT.
35A094      IF BT1 = B1  IF BT2 = B2  MOVE I1 TO B10   REWRITE B-CARD
            GO TO BT-UPOATTT.
35A095      GO TO BT-UPOATT.
35A096 BT-UPOATTT.   EXIT.
** 3601  I7-END. CLOSE B-FILE.
3602        IF FLIP-SW = 1 GO TO I-8.
36021       IF FLIP-SW = 2 DISPLAY 'A-FILE ' A-TEMP
36022       DISPLAY 'I-FILE ' I-CARD
36023       DISPLAY 'I-7 NOT = B3'  GO  TO I-8.
3604        IF FLIP-SW = 3 ALTER I7AA TO PROCEED TO I70A MOVE 2 TO
3605        FLIP-SW GO TO B7-OPEN.
3606        IF FLIP-SW = 10 GO TO I-8B.
3607        IF FLIP-SW = 12 GO TO I-8C.
3608        IF FLIP-SW = 13 GO TO I-9.
3609        IF FLIP-SW = 14 GO TO I-10.
3610        IF FLIP-SW = 15 GO TO I10BB.
3611        IF FLIP-SW = 16 GO TO STA-CK.
3612        IF FLIP-SW = 17 GO TO I10BA.
3613        IF FLIP-SW = 18 GO TO STA-CK.
3614        IF FLIP-SW = 19 GO TO I9AC.
3615        IF FLIP-SW = 20 GO TO I9FC.
3616        IF FLIP-SW = 28 ALTER I7AA TO PROCEED TO I70A MOVE 27 TO
3617        FLIP-SW GO TO B7-OPEN.
            IF FLIP-SW = 27
               DISPLAY 'A-FILE ' A-TEMP
               DISPLAY 'I-FILE ' I-CARD
               DISPLAY 'I-10 NOT EQUAL A-20'
            GO TO STA-CK.
            IF FLIP-SW = 37
               DISPLAY 'A-FILE ' A-TEMP
               DISPLAY 'I-FILE ' I-CARD
               DISPLAY 'I-8 NOT = A14'
            GO TO I-9.
3620        IF FLIP-SW = 38 ALTER I7AA TO PROCFED TO I70A MOVE 37 TO
3621        FLIP-SW GO TO B7-OPEN.
            IF FLIP-SW = 47
               DISPLAY 'A-FILE ' A-TEMP
               DISPLAY 'I-FILE ' I-CARD
               DISPLAY 'I-9 NOT = A17'
            GO TO I-10.
3623        IF FLIP-SW = 48 ALTER I7AA TO PROCEED TO I70A MOVE 47 TO
3624        FLIP-SW GO TO B7-OPEN.
036250      IF FLIP-SW = 77 DISPLAY '36250  ' I-CARD GO TO CHK-I789.
038010 I-8.                                                          CM000019
            MOVE A21 TO P12 (HK-SUB).
            MOVE I4 TO P11 (HK-SUB).
             MOVE I11 TO P13 (HK-SUB).
            MOVE ITEM-NO TO P14 (HK-SUB).
038020      MOVE 1 TO STA-SW. ALTER I7AA TO PROCEED TO I7HA.          CM000019
038030      IF I8 = SPACE GO TO A-14. IF I8C = SPACE GO TO I8KA.      CM000019
```

23

```
01252   038040      IF I8D = SPACE GO TO I8KB. IF I8E = SPACE GO TO I8KC.        CM000019
01253 ** 38041      MOVE 37 TO FLIP-SW.
01254   038050      MOVE I8 TO ST-7. ALTER I7AA TO PROCEED TO I7GA.              CM000019
01255   038060      GO TO B7-OPEN.                                               CM000019
01256   038070 A-14. IF A14 = SPACE GO TO I-9.                                   CM000019
01257   038080      IF A14B = SPACE GO TO I8KD. MOVE A14 TO ST-2.                CM000019
01258   038090      ALTER I7AA TO PROCEED TO I7BA. MOVE 37 TO FLIP-SW.           CM000019
01259   038100      GO TO B7-OPEN.                                               CM000019
01260   038110 I8KD. MOVE A14A TO ST-1. MOVE 37 TO FLIP-SW. GO TO B7-OPEN.       CM000019
01261   038120 I8KA. IF A14B = SPACE GO TO I8KE.                                 CM000019
01262   038130      MOVE I8AR TO ST-1. MOVE A14B TO ST-3. ALTER I7AA TO          CM000019
01263   038140      PROCEED TO I7CA. MOVE 37 TO FLIP-SW. GO TO B7-OPEN.          CM000019
01264   038150 I8KE. MOVE I8A TO ST-1. MOVE 37 TO FLIP-SW. GO TO B7-OPEN.        CM000019
01265 ** 3816   I8KB. IF A14BR = SPACE GO TO I8KF.
01266    3817       MOVE I8AR TO ST-1. MOVE I8C TO ST-5.
01267    38171      MOVE A14BR TO ST-6.
01268    3818       MOVE 37 TO FLIP-SW. ALTER I7AA TO PROCEED TO I7EA.
01269    3818I      GO TO B7-OPEN.
01270   038190 I8KF. MOVE I8AR TO ST-1. MOVE I8C TO ST-5. ALTER I7AA TO PROCEED CM000019
01271 ** 3820       TO I7FA MOVE 37 TO FLIP-SW GO TO B7-OPEN.
01272   038210 I8KC. MOVE I8AR TO ST-1. MOVE I8BR TO ST-3. ALTER I7AA TO         CM000019
01273   038220      PROCEED TO I7CA. MOVE 38 TO FLIP-SW.                         CM000019
01274   038230      GO TO B7-OPEN.
01275   039010 PB-SET. IF BSW-1 NOT = 1 GO TO B7-RO.                             CM000019
01276   039020      IF PB-SW2 = 1 GO TO APB-SET.                                 CM000019
01277   039030      IF O-SW1 = 1 GO TO S-SET.                                    CM000019
01278 ** 3904   S2-SET. IF B8B = 'PB1' GO TO I8ZV.                               CM000019
01279    39041      IF B8B NOT = 'PB2' GO TO I-8E.                               CM000019
01280    39042 I8ZV.                                                             CM000019
01281   039050      MOVE 1 TO PB-SW2. MOVE B8B TO B-ST. ADD 1 TO APT-SUB.        CM000019
01282   039060      PERFORM PAT-M. MOVE B9 TO APT3 (APT-SUB).                    CM000019
01283   039070      MOVE B8 TO APT2 (APT-SUB). MOVE B3 TO PB (HK-SUB).           CM000019
01284   039080      GO TO I-8E.                                                  CM000019
01285   039090 APB-SET. GO TO BPB-SET.                                           CM000019
01286   039100 BPB-SET. IF B6B NOT = B-ST MOVE 12 TO FLIP-SW GO TO B7-RO.        CM000019
01287   039110 S1-SET. IF O-SW1 = 1 GO TO I8TA. MOVE B7 TO APT4 (APT-SUB).       CM000019
01288   039120      GO TO I8TB.                                                  CM000019
01289   039130 I8TA. IF THRU-SW = S-ST1 MOVE B-ST TO S-ST2 MOVE 2 TO             CM000019
01290   039140      APT5 (APT-SUB).                                              CM000019
01291 ** 3915       IF A13A NOT = SPACE OR A13B = SPACE MOVE B7 TO
01292    39151      APT4 (APT-SUB)
01293    39152      MOVE B6 TO APT2 (APT-SUB)
01294   039160      GO TO I8TB.                                                  CM000019
01295   039170      PERFORM SQUID-ROUTINE. MOVE B7 TO QPRTE (SQ-SUB).            CM000019
01296   039180      MOVE 1 TO SCA-SW. MOVE B6 TO QPRTF (SQ-SUB).                 CM000019
01297   039190 I8TB. IF B8B = 'PB1' OR B8B = 'PB2' ADD 1 TO APT-SUB              CM000019
01298 ** 39191      MOVE 1 TO P15 (HK-SUB)                                       CM000019
01299   039200      PERFORM PAT-M MOVE B8 TO APT2 (APT-SUB) MOVE B9 TO           CM000019
01300   039210      APT3 (APT-SUB) MOVE 1 TO PB-SW2 MOVE B8B TO B-ST.            CM000019
01301 ** 3922   I-8E. MOVE B3 TO P8 (HK-SUB) MOVE 1 TO P15 (HK-SUB).             CM000019
01302    3923       IF B3RRB = '0' OR '1' OR '2' OR '3' OR '4' OR '5' OR '6'
01303    39231      OR '7' OR '8' OR '9' GO TO MI-8E.
01304    3924       IF M-SW2 = 0                                                 CM000019
01305    3925       MOVE 1 TO M-SW2                                              CM000019
01306    3926       MOVE B3 TO M-2ST
01307    3927       GO TO MI-8E.                                                 CM000019
01308    3928       IF B3RRA = M-ST2 GO TO MI-8E.                                CM000019
```

24

```
01309    3929        MOVE B3 TO M-3ST.
01310    3930   MI-8E.                                                    CM000019
01311    4001        PERFORM 8-UPDATE CLOSE B-FILE GO TO I-9.             CM000019
01312   040020 I-8C. IF B-ST = 'PB1' MOVE 'PB2' TO  R-ST GO TO I8TC.      CM000019
01313   040030       IF B-ST = 'PB2' MOVE 'PB1' TO R-ST.                  CM000019
01314   040040 I8TC. ALTER APB-SET TO PROCEED TO DP8-SET.                 CM000019
01315   040050       MOVE 13 TO FLIP-SW. GO TO B7-OPEN.                   CM000019
01316   040060 DP8-SET.                                                   CM000019
01317   040070       IF B6B NOT = R-ST GO TO B7-RO. MOVE B-CARD TO B-TEMP. CM000019
01318 ** 40080       CLOSE B-FILE. OPEN I-O B-FILE.  MOVE 13 TO FLIP-SW.
01319   040090 BJ-READ. READ B-FILE AT END GO TO I8-END.                  CM000019
01320   040100       IF B5 NOT = 'INTR' GO TO BJ-READ.                    CM000019
01321   040110       IF B10 NOT = SPACE GO TO BJ-READ.                    CM000019
01322   040120       PERFORM B-TABLE. IF BSW-1 = 1 GO TO I8-J. GO TO BJ-READ. CM000019
01323   040130 I8-END. CLOSE B-FILE. MOVE 801 TO CEB MOVE I1 TO CEA       CM000019
01324   040140       PERFORM C-WRIT GO TO I-9.                            CM000019
01325 ** 4015  S-SET. IF THRU-SW > S-ST1 GO TO S2-SET.
01326   040160       IF SQUID-COUNT = 0 GO TO S2-SET.
01327 ** 4017  GJMP. GO TO IJMP.
01328    4018  IJMP. IF B6B = S-ST2 GO TO S1-SET. MOVE 10 TO FLIP-SW.
01329   040190       GO TO B7-RO.                                         CM000019
01330 ** 4020  I-8B. ALTER GJMP TO PROCEED TO HJMP MOVE 13 TO FLIP-SW.
01331   040210       GO TO B7-OPEN.                                       CM000019
01332   40A010 I8-J. IF B6B NOT = B-ST GO TO I8TO.
01333   40A020 S3-SET. IF O-SW1 NOT = 1 GO TO I8TE.                       CM000019
01334   40A030       IF THRU-SW = S-ST1 MOVE B-ST TO S-ST2 MOVE 2 TO      CM000019
01335   40A040       APT5 (APT-SUB).                                      CM000019
01336   40A050       IF A13A NOT = SPACE GO TO I8TE.                      CM000019
01337   40A060       IF A13B = SPACE GO TO I8TE. PERFORM SQUID-ROUTINE.   CM000019
01338   40A061       MOVE B6 TO QPRTF (SQ-SUB)
01339   40A070       MOVE B7 TO QPRTE (SQ-SUB) MOVE 1 TO SCA-SW GO TO I8TF. CM000019
01340   40A080 I8TE. MOVE B7 TO APT4 (APT-SUB).                           CM000019
01341   40A090 I8TF. ADD 1 TO APT-SUB. PERFORM PAT-M. MOVE BB TO APT2 (APT-SUB) CM000019
01342   40A100       MOVE B9 TO APT3 (APT-SUB). MOVE BBB TO B-ST.         CM000019
01343   40A110 I8TG. PERFORM B-UPDATE.                                    CM000019
01344   40A120       IF BT6B NOT = B-ST MOVE B02 TO CEB MOVE I1 TO CEA PERFORM CM000019
01345 ** 40A13       C-WRIT GO TO I8TH.
01346   40A140       MOVE BT7 TO APT4 (APT-SUB).                          CM000019
01347   40A150       IF BT8B = 'PB1' OR BT8B = 'PB2' ADD 1 TO APT-SUB MOVE BTB CM000019
01348   40A160       TO APT2 (APT-SUB) PERFORM PAT-M MOVE BT9 TO APT3 (APT-SUB) CM000019
01349   40A170       MOVE 1 TO PB-SW2 MOVE BT8B TO B-ST.                  CM000019
01350   40A171 I8TH.                                                      CM000019
01351   40A172       IF B3TRRB = '0' OR '1' OR '2' OR '3' OR '4' OR '5' OR '6'
01352 **40A172       OR '7' OR '8' OR '9' GO TO MI8TH.
01353   40A173       IF M-SW2 = 0 MOVE 1 TO M-SW2
01354   40A174       MOVE BT3 TO M-2ST
01355   40A175       GO TO MI8TH.                                         CM000019
01356   40A176       IF B3TRRA = M-ST2  GO TO MI8TH.                      CM000019
01357   40A177       MOVE BT3 TO M-3ST.
01358   40A17B MIBTH.                                                     CM000019
01359   40A179       PERFORM BT-UPDATE MOVE BT3 TO P8 (HK-SUB)  CLOSE B-FILE. CM000019
01360   40A1B1       GO TO I-9.
01361   40A190 I8TO. IF BBB NOT = B-ST GO TO BJ-READ.                     CM000019
01362   40A191 S4-SET.
01363   40A200       IF O-SW1 NOT = 1 GO TO I8TI.                         CM000019
01364   40A210       IF THRU-SW = S-ST1 MOVE B-ST TO S-ST2 MOVE 2 TO      CM000019
01365   40A220       APT5 (APT-SUB).                                      CM000019
```

25

```
01366   40A230      IF A13A NOT = SPACE OR A13B = SPACE GO TO 18T1.                CM000019
01367   40A240      PERFORM SQUIO-ROUTINE. MOVE B9 TO QPRTE (SQ-SUB) MOVE 1 TO     CM000019
01368   40A250      SCA-SW MOVE B8 TO QPRTF (SQ-SUB).
01369   40A251      GO TO 18TJ.
01370   408010 18T1. MOVE B9 TO APT4 (APT-SUB).                                    CM000019
01371   408020 18TJ. ADD 1 TO APT-SUB. PERFORM PAT-M. MOVE B6 TO APT2 (APT-SUB)    CM000019
01372   408030      MOVE B7 TO APT3 (APT-SUB). MOVE B6B TO B-ST. GO TO 18TG.       CM000019
01373   408040 HJMP. IF B6B NOT = S-ST3 GO TO B7-RD.                               CM000019
01374   408050      MOVE B-CARD TO B-TEMP. CLOSE B-FILE.                           CM000019
01375 **408050      OPEN I-O B-FILE.
01376   408060      MOVE 12 TO FLIP-SW.                                            CM000019
01377   408070 BH-READ. READ B-FILE AT END GO TO 18-END.                           CM000019
01378   408080      IF B5 NOT = 'INTR' GO TO BH-READ.                              CM000019
01379   408090      IF B10 NOT = SPACE GO TO BH-READ.                              CM000019
01380   408100      IF B6B NOT = S-ST2 GO TO 18TK.                                 CM000019
01381   408110      PERFORM B-TABLE. IF BSW-1 NOT = 1 GO TO BH-READ. GO TO         CM000019
01382   408120      S3-SET.                                                        CM000019
01383   408130 18TK. IF B8B NOT = S-ST2 GO TO BH-READ. PERFORM B-TABLE.            CM000019
01384   408140      IF BSW-1 NOT = 1 GO TO BH-READ. GO TO S4-SET.                  CM000019
01385 **041010 I-9.                                                                CM000019
01386               MOVE A21 TO P12 (HK-SUB).
01387               MOVE 14 TO P11 (HK-SUB).
01388               MOVE I11 TO P13 (HK-SUB).
01389               MOVE ITEM-NO TO P14 (HK-SUB).
01390   041020      MOVE 2 TO STA-SW ALTER I7AA TO PROCEED TO 17HA.                CM000019
01391   041030      IF I9 = SPACE GO TO A-17. IF I9C = SPACE GO TO I9KA.           CM000019
01392   041040      IF I90 = SPACE GO TO I9KB. IF I9E = SPACE GO TO I9KC.          CM000019
01393   041050      MOVE 19 TO ST-7. ALTER I7AA TO PROCEED TO I7GA.                CM000019
01394 ** 41051      MOVE 47 TO FLIP-SW.
01395   041060      GO TO B7-OPEN.                                                 CM000019
01396   041070 A-17. IF A17 = SPACE GO TO I-10.                                    CM000019
01397   041080      IF A17B = SPACE GO TO I9KO. MOVE A17 TO ST-2.                  CM000019
01398   041090      ALTER 17AA TO PROCEED TO I7BA. MOVE 47 TO FLIP-SW.             CM000019
01399   041100      GO TO B7-OPEN.                                                 CM000019
01400   041110 I9KO. MOVE A17A TO ST-1. MOVE 47 TO FLIP-SW. GO TO B7-OPEN.         CM000019
01401   041120 I9KA. IF A17B = SPACE GO TO I9KE.                                   CM000019
01402   041130      MOVE I9AR TO ST-1. MOVE A17B TO ST-3. ALTER I7AA TO            CM000019
01403   041140      PROCEED TO I7CA. MOVE 47 TO FLIP-SW. GO TO B7-OPEN.            CM000019
01404   041150 19KE. MOVE I9A TO ST-1. MOVE 47 TO FLIP-SW. GO TO B7-OPEN.          CM000019
01405 ** 4116  I9KB. IF A17BR = SPACE GO TO I9KF.
01406    4117       MOVE I9AR TO ST-1. MOVE 19C TO ST-5. MOVE A17BR TO ST-6.
01407   041180      MOVE 47 TO FLIP-SW. ALTER I7AA TO PROCEED TO I7EA.             CM000019
01408   041190      GO TO B7-OPEN.                                                 CM000019
01409 ** 4120  I9KF. MOVE I9AR TO ST-1. MOVE I9C TO ST-5. ALTER I7AA TO
01410    4121       PROCEED TO I7FA MOVE 47 TO FLIP-SW GO TO B7-OPEN.
01411    4122  I9KC. MOVE 19AR TO ST-1. MOVE I9BR TO ST-3. ALTER I7AA TO
01412   041230      PROCEED TO I7CA. MOVE 48 TO FLIP-SW.                           CM000019
01413   041240      GO TO B7-OPEN.
01414   042010 EPB-SET. IF BSW-2 = 1 GO TO B7-RD.                                  CM000019
01415   042020      IF PB-SW2 NOT = 1 GO TO I9TA.                                  CM000019
01416   042030 19BO. GO TO 19BE.                                                   CM000019
01417 ** 4204  I9BE. IF B6B NOT = B-ST MOVE 19 TO FLIP-SW GO TO B7-RD.
01418   042050 S19-SET. IF O-SW1 = 1 GO TO I9TB. IF O-SW2 NOT = 1 GO TO I9TC.      CM000019
01419   042060      IF THRU-SW NOT = S-ST1 GO TO I9TB.                             CM000019
01420   042070      MOVE B-ST TO S-ST2. MOVE 2 TO APT5 (APT-SUB).                  CM000019
01421   042080 I9TB. IF A13A NOT = SPACE OR A15A NOT = SPACE OR A16B = SPACE       CM000019
01422   042090      GO TO I9TC. PERFORM SQUIO-ROUTINE. MOVE B7 TO QPRTE (SQ-SUB)   CM000019
```

26

```
01423   042091      MOVE B6 TO QPRTF (SQ-SUB)
01424   042100      MOVE 1 TO SCA-SW. GO TO I9TO                          CM000019
01425   042110 I9TC. MOVE B7 TO APT4 (APT-SUB).                           CM000019
01426   042120 I9TO. IF BBB = 'PB1' OR BBB = 'PB2' ADD 1 TO APT-SUB MOVE B8 TO  CM000019
01427   042130      APT2 (APT-SUB) MOVE B9 TO APT3 (APT-SUB) PERFORM PAT-M  CM000019
01428   042140      MOVE 1 TO PB-SW2 MOVE BBB TO B-ST.                    CM000019
01429   042141 I9TE.                                                      CM000019
01430 ** 42142      MOVE 1 TO P15 (HK-SUB)                                CM000019
01431    42143      IF B3RRB = '0' OR '1' OR '2' OR '3' OR '4' OR '5' OR '6'
01432 ** 42143      OR '7' OR '8' OR '9' GO TO MI9TE.
01433    42144      IF M-SW3 = 0                                          CM000019
01434    42145      MOVE 1 TO M-SW3                                       CM000019
01435    42146      MOVE B3 TO M-4ST
01436    42147      GO TO MI9TE.                                          CM000019
01437    42148      IF B3RRA = M-ST4 GO TO MI9TE.                         CM000019
01438    42149      MOVE B3 TO M-5ST.
01439 ** 42149 MI9TE.                                                     CM000019
01440   042150      MOVE B3 TO P9 (HK-SUB) PERFORM B-UPDATE CLOSE B-FILE  CM000019
01441   042160      GO TO I-10.                                           CM000019
01442   042170 I9-END. CLOSE B-FILE MOVE 101 TO CEB MOVE I1 TO CEA PERFORM  CM000019
01443   042180      C-WRIT GO TO I-10.                                    CM000019
01444   042190 I9TA. IF O-SW1 = 1 OR O-SW2 = 1 GO TO SI9-SET.             CM000019
01445 ** 42191 S29-SET.
01446    4220       IF BBB = 'PB1' GO TO I9ZR.                            CM000019
01447    42201      IF BBB NOT = 'PB2' GO TO I9TE.                        CM000019
01448    4221   I9ZR.                                                    CM000019
01449    42211      MOVE 1 TO PB-SW2.                                     CM000019
01450   042220      MOVE BBB TO B-ST. ADD 1 TO APT-SUB PERFORM PAT-M      CM000019
01451   042230      MOVE B8 TO APT2 (APT-SUB) MOVE B9 TO APT3 (APT-SUB)   CM000019
01452   042240      GO TO I9TE.                                           CM000019
01453   043010 SI9-SET. IF THRU-SW > S-ST1 GO TO S29-SET.
01454   043020      IF SQUID-COUNT = 0 GO TO S29-SET.
01455   043030 I9GC. GO TO I9HC.                                          CM000019
01456 ** 4304   I9HC. IF B6B = S-ST2 GO TO S19-SET.
01457    4305       MOVE 20 TO FLIP-SW GO TO B7-RD.
01458   043060 I9FC. IF S-ST2 = 'PB1' MOVE 'PB2' TO S-ST3 GO TO I9TF.     CM000019
01459   043070      IF S-ST2 = 'PB2' MOVE 'PB1' TO S-ST3.                 CM000019
01460   043080 I9TF. MOVE 14 TO FLIP-SW ALTER I9GC TO PROCEED TO I9JC GO TO  CM000019
01461   043090      B7-OPEN.                                              CM000019
01462   043100 I9JC. IF B6B NOT = S-ST3 GO TO B7-RD. MOVE B-CARD TO B-TEMP.  CM000019
01463   043110      CLOSE B-FILE. OPEN I-O B-FILE. MOVE 1 TO FLIP-SW.
01464   043120 BV-READ. READ B-FILE AT END GO TO I9-END.                  CM000019
01465   043130      IF B5 NOT = 'INTR' GO TO BV-READ.                     CM000019
01466   043140      IF B10 NOT = SPACE GO TO BV-READ. PERFORM B-TABLE.    CM000019
01467 ** 4316   I9VC. IF B6B = S-ST2 GO TO S39-SET.
01468   043170      IF BBB = S-ST2 GO TO S49-SET. GO TO BV-READ.          CM000019
01469   043180 I9AC. IF B-ST = 'PB1' MOVE 'PB2' TO R-ST GO TO I9TG.       CM000019
01470   043190      IF B-ST = 'PB2' MOVE 'PB1' TO R-ST.                   CM000019
01471   043200 I9TG. MOVE 14 TO FLIP-SW. ALTER I9BO TO PROCEED TO I9DC.   CM000019
01472   043210      GO TO B7-OPEN.                                        CM000019
01473   043220 I9DC. IF B6B NOT = R-ST GO TO B7-RD. MOVE B-CARD TO B-TEMP.  CM000019
01474   043230      CLOSE B-FILE. OPEN I-O B-FILE.
01475   43A010      MOVE 2 TO FLIP-SW.                                    CM000019
01476   43A020 BT-READ. READ B-FILE AT END GO TO I9-END.                  CM000019
01477   43A030      IF B5 NOT = 'INTR' GO TO BT-READ.                     CM000019
01478   43A040      IF B10 NOT = SPACE GO TO BT-READ. PERFORM B-TABLE.    CM000019
01479   43A060 I9EC. IF B6B = B-ST GO TO S39-SET.                         CM000019
```

27

```
014B0   43A070      IF B8B NOT = B-ST GO TO BT-READ.                                CM000019
01481   43A080 S49-SET. IF O-SW1 = 1 GO TO I9TH. IF O-SW2 NOT = 1 GO TO I9TH.      CM000019
014B2   43A090      IF THRU-SW = S-ST1 MOVE B-ST TO S-ST2 MOVE 2 TO                 CM000019
014B3   43A100      APT5 (APT-SUB).                                                 CM000019
01484   43A110 I9TH. IF A13A NOT = SPACE OR A15A NOT = SPACE GO TO I9TI.           CM000019
01485   43A120      IF A16B = SPACE GO TO I9TI. PERFORM SQUIO-ROUTINE.              CM000019
01486   43A130      MOVE B8 TO QPRTF (SQ-SUB).
01487 **43A130      MOVE B9 TO QPRTE (SQ-SUB) MOVE 1 TO SCA-SW.                     CM000019
01488   43A140 I9TI. MOVE B9 TO APT4 (APT-SUB).                                    CM000019
014B9 **43A050 I9TJ.   ADD 1 TO APT-SUB.   PERFORM PAT-M.
01490   43A160      MOVE B6 TO APT2 (APT-SUB) MOVE B7 TO APT3 (APT-SUB)             CM000019
01491   43A170      MOVE B6B TO B-ST.                                               CM000019
01492   434171      PERFORM B-UPDATE.
01493 **43A1B0 (9TK. IF BT6B NOT = B-ST MOVE 902 TO CEB MOVE 11 TO CEA PERFORM     CM000019
01494   43A19       C-WRIT CLOSE B-FILE GO TO I-10. MOVE BT7 TO APT4 (APT-SUB).
01495   43A200      (F BT8B = 'PB1' OR BT8B = 'PB2' ADD 1 TO APT-SUB MOVE BTB       CM000019
01496   43A210      TO APT2 (APT-SUB) MOVE BT9 TO APT3 (APT-SUB) PERFORM PAT-M      CM000019
01497   43A220      MOVE 1 TO PB-SW2                                                CM000019
01498   43A221      MOVE BT8B TO B-ST.                                              CM000019
01499   43A222      IF B3TRRB = '0' OR '1' OR '2' OR '3' OR '4' OR '5' OR '6'
01500 **43A222      OR '7' OR '8' OR '9' GO TO MI9TK.
01501   43A223      IF M-SW3 = 0
01502   43A224      MOVE 1 TO M-SW3                                                 CM000019
01503   43A225      MOVE BT3 TO M-4ST
01504   43A226      GO TO MI9TK.                                                    CM000019
01505   43A227      (F B3TRRA = M-ST4 GO TO MI9TK.                                  CM000019
01506   43A22B      MOVE BT3 TO M-5ST.
01507   43A229 M(9TK.                                                               CM000019
0150B   43A231      MOVE BT3 TO P9 (HK-SUB)
01509   43A240      PERFORM BT-UPDATE CLOSE B-FILE GO TO I-10.                      CM000019
01510   43B010 S39-SET. IF O-SW1 = 1 GO TO I9TL. IF O-SW2 NOT = 1 GO TO I9TM.      CM000019
01511   43B020      IF THRU-SW NOT = S-ST1 GO TO I9TL. MOVE B-ST TO S-ST2.          CM000019
01512   43B030      MOVE 2 TO APT5 (APT-SUB).                                       CM000019
01513   43B040 I9TL. IF A13A NOT = SPACE OR A15A NOT = SPACE OR A16B = SPACE       CM000019
01514   43B05       GO TO (9TM. PERFORM SQUIO-ROUTINE MOVE B7 TO
01515   43B051      QPRTE (SQ-SUB)
01516   43B052      MOVE B6 TO QPRTF (SQ-SUB)
01517   43B060      MOVE 1 TO SCA-SW.
01518   43B070 I9TM. MOVE B7 TO APT4 (APT-SUB).
01519   43B0B0 I9TN.   ADD 1 TO APT-SUB.   PERFORM PAT-M.  MOVE BB
01520   43B090      TO APT2 (APT-SUB) MOVE B9 TO APT3 (APT-SUB) MOVE BBB TO B-ST.CM000019
01521   43B091      MOVE B3 TO P9 (HK-SUB) MOVE 1 TO P15 (HK-SUB)                   CM000019
01522   43B092      PERFORM B-UPDATE.
01523   43B100      GO TO (9TK.                                                     CM000019
01524 **045010 (-10.                                                                CM000019
01525   045020      MOVE 3 TO STA-SW. ALTER I7AA TO PROCEED TO I7HA.                CM000019
01526               MOVE A21 TO P12 (HK-SUB).
01527               MOVE I4 TO P11 (HK-SUB).
0152B                MOVE (11 TO P13 (HK-SUB).
01529               MOVE (TEM-ND TO P14 (HK-SUB).
01530   045030      IF I10 = SPACE GO TO A-20.                                      CM000019
01531   045031      IF (10B = '-' OR I10C = '-' GO TO 1.
01532   045040      IF I10C = SPACE GO TO I10KA.                                    CM000019
01533   045050      IF I10D = SPACE GO TO I10KB.                                    CM000019
01534   045060      IF I10E = SPACE GO TO I10KC.                                    CM000019
01535   045070      MOVE 110 TO ST-7. ALTER I7AA TO PROCEED TO I7GA.                CM000019
01536 ** 45071      MOVE 27 TO FLIP-SW.
```

28

```
01537   045080      GO TO B7-OPEN.                                          CM000019
01538   045090 A-20.                                                        CM000019
01539   045100      IF A20 = SPACE GO TO STA-CK.                            CM000019
01540   045110      IF A20B = SPACE GO TO I10KO.                            CM000019
01541   045120      MOVE A20 TO ST-2. ALTER I7AA TO PROCEED TO I7BA.        CM000019
01542   045130      MOVE 27 TO FLIP-SW. GO TO B7-OPEN.                      CM000019
01543   045140 I10KA.                                                       CM000019
01544   045150      IF A20B = SPACE GO TO I10KE.                            CM000019
01545   045160      MOVE I10AR TO ST-1. MOVE A20B TO ST-3.                  CM000019
01546   045170      ALTER I7AA TO PROCEED TO I7CA.                          CM000019
01547   045180      MOVE 27 TO FLIP-SW. GO TO B7-OPEN.                      CM000019
01548   045190 I10KB.                                                       CM000019
01549 ** 4520       IF A20BR = SPACE GO TO I10KF.
01550   045210      MOVE I10AR TO ST-1. MOVE I10C TO ST-5.                  CM000019
01551 ** 4522       MOVE A20BR TO ST-6. ALTER I7AA TO PROCEED TO I7EA.
01552   045230      MOVE 27 TO FLIP-SW.                                     CM000019
01553   045240      GO TO B7-OPEN.
01554 **044010 I10KC.                                                       CM000019
01555   044020      MOVE I10AR TO ST-1. MOVE I10BR TO ST-3.                 CM000019
01556   044030      ALTER I7AA TO PROCEED TO I7CA.                          CM000019
01557   044040      MOVE 28 TO FLIP-SW. GO TO B7-OPEN.                      CM000019
01558   044050 I10KD.                                                       CM000019
01559   044060      MOVE A20A TO ST-1. MOVE 27 TO FLIP-SW.                  CM000019
01560   044070      GO TO B7-OPEN.                                          CM000019
01561   044080 I10KE.                                                       CM000019
01562   044090      MOVE I10A TO ST-1. MOVE 27 TO FLIP-SW.                  CM000019
01563   044100      GO TO B7-OPEN.                                          CM000019
01564   044110 I10KF.                                                       CM000019
01565   044120      MOVE I10AR TO ST-1. MOVE I10C TO ST-5.                  CM000019
01566 ** 4413       MOVE 27 TO FLIP-SW.
01567   044130      ALTER I7AA TO PROCEED TO I7FA. GO TO B7-OPEN.           CM000019
01568   044140 KPB-SET.                                                     CM000019
01569   044160      IF PB-SW2 NOT = 1 GO TO I10TA.                          CM000019
01570   044170 I10CB. GO TO I100B.                                          CM000019
01571   044180 I100B. IF B6B NOT = B-ST MOVE 15 TO FLIP-SW GO TO B7-RD.     CM000019
01572   044190 S110-SET.                                                    CM000019
01573   044200      IF O-SW1 = 1 GO TO I10TB.
01574   044201      IF O-SW2 = 1   IF I9 = SPACE  IF A17 = SPACE
01575   044202      GO TO S110-SETZ ELSE GO TO I10TB  ELSE GO TO I10TB.
01576   044210      IF O-SW4 NOT = 1 GO TO I10TC.                           CM000019
01577   044211 S110-SETZ.
01578   044220      IF THRU-SW NOT = S-ST1 GO TO I10TB.                     CM000019
01579   044230      MOVE B-ST TO S-ST2.                                     CM000019
01580   044240      MOVE 2 TO APT5 (APT-SUB).                               CM000019
01581   046010 I10TB.                                                       CM000019
01582   046020      IF A13A NOT = SPACE OR A15A NOT = SPACE OR A18A NOT = SPACE  CM000019
01583   046030      OR A18B = SPACE GO TO I10TC.                            CM000019
01584   046040      PERFORM SQUID-ROUTINE. MOVE B6 TO QPRTF (SQ-SUB).       CM000019
01585   046050      MOVE B7 TO QPRTE (SQ-SUB). MOVE 1 TO SCA-SW.            CM000019
01586   046060      GO TO I10AA.                                            CM000019
01587   046070 I10TC. MOVE B7 TO APT4 (APT-SUB).                            CM000019
01588 ** 46071 I10AA.  IF I7-SWT = 1   MOVE 0 TO I7-SWT
01589    46072         IF B6B = 'PB1' OR B6B = 'PB2'
01590    46073         GO TO AA01I
01591    46074         ELSE MOVE B6 TO P5A (HK-SUB)
01592    46075         MOVE B7 TO P5B (HK-SUB).
01593    46076         MOVE 0 TO I7-SWT.
```

29

```
01594    46080 AA01I.  MOVE B3 TO P10 (HK-SUB) MOVE 1 TO P15 (HK-SUB)
01595 ** 460B0 MA10I.                                                    CM000019
01596    0460B0     IF B3RRB = '0' OR '1' OR '2' OR '3' OR '4' OR '5' OR '6'
01597 **0460B0      OR '7' OR '8' OR '9' GO TO MA10IAL.
0159B ** 46080      IF M-SW3 = 0                                         CM000019
01599 ** 460B0      MOVE 1 TO M-SW3                                      CM000019
01600 ** 460B0      MOVE B3 TO M-6ST.
01601    046080 MA10IAL.
01602 ** 46081      PERFORM B-UPDATE CLOSE B-FILE GO TO STA-CK.          CM000019
01603    046090 I10TA.                                                   CM000019
01604    046100     IF O-SW1 = 1 GO TO I10TO.                            CM000019
01605    046110     IF O-SW2 = 1 GO TO I10TO.                            CM000019
01606    046120     IF O-SW4 = 1 GO TO I10TO. GO TO I10AA                CM000019
01607    046130 I10TO. IF THRU-SW > S-ST1 GO TO I10AA.
0160B    046140     IF SQUIO-COUNT = 0 GO TO I10AA.
01609    046150 I10CA. GO TO I10DA.                                      CM000019
01610    046160 I10DA. IF B6B = S-ST2 GO TO S110-SET.                    CM000019
01611    046170     MOVE 17 TO FLIP-SW GO TO B7-RO.                      CM000019
01612    0461B0 I10BA.                                                   CM000019
01613    046190     IF S-ST2 = 'PB1' MOVE 'PB2' TO S-ST3 GO TO I10TE.    CM000019
01614    046200     IF S-ST2 = 'PB2' MOVE 'PB1' TO S-ST3.                CM000019
01615    046210 I10TE. ALTER I10CA TO PROCEED TO I10EA.                  CM000019
01616    046220     MOVE 18 TO FLIP-SW GO TO B7-OPEN.                    CM000019
01617    047010 I10EA. IF B6B NOT = S-ST3 GO TO B7-RO.                   CM000019
0161B    047020     MOVE B-CARD TO B-TEMP. CLOSE B-FILE.                 CM000019
01619 ** 47030      OPEN I-O B-FILE.  MOVE 2 TO FLIP-SW.
01620    047040 BJ-RO.                                                   CM000019
01621    047050     READ B-FILE AT END GO TO I10-END.                    CM000019
01622    047060     IF B5 NOT = 'INTR' GO TO BJ-RO.                      CM000019
01623    047070     IF B10 NOT = SPACE GO TO BJ-RO.                      CM000019
01624    0470B0     PERFORM B-TABLE.                                     CM000019
01625    047090     IF BSW-1 = 1 GO TO I10FA. GO TO BJ-RO.               CM000019
01626    047100 I10FA. IF B6B = S-ST2 GO TO S310-SET.                    CM000019
01627 ** 4711       IF BBB = S-ST2 GO TO S410-SET. GO TO BJ-RO.
01628    047120 I10-END.                                                 CM000019
01629    047121     CLOSE B-FILE.
01630    047130     MOVE 101 TO CEB. MOVE 11 TO CEA PERFORM C-WRIT GO TO CM000019
01631    047140     STA-CK.                                              CM000019
01632    047150 I10BB.                                                   CM000019
01633    047160     IF B-ST = 'PB1' MOVE 'PB2' TO R-ST GO TO I10TF.      CM000019
01634    047170     IF B-ST = 'PB2' MOVE 'PB1' TO R-ST.                  CM000019
01635    047180 I10TF. MOVE 16 TO FLIP-SW. ALTER I10CB TO PROCEED TO I10EB. CM000019
01636    047190     GO TO B7-OPEN.                                       CM000019
01637    047200 I10EB.                                                   CM000019
0163B    047210     IF B6B NOT = R-ST GO TO B7-RD.                       CM000019
01639    047220     MOVE B-CARD TO B-TEMP. CLOSE B-FILE.                 CM000019
01640 ** 4723       OPEN I-O B-FILE.  MOVE 1 TO FLIP-SW.
01641    048010 BK-RD. READ B-FILE AT END GO TO I10-END.                 CM000019
01642    048020     IF B5 NOT = 'INTR' GO TO BK-RO.                      CM000019
01643    04B030     IF B10 NOT = SPACE GO TO BK-RO. PERFORM B-TABLE.     CM000019
01644    048040     IF BSW-1 NOT = 1 GO TO BK-RD.                        CM000019
01645 ** 4B05  I10FB. IF B6B NOT = B-ST GO TO I10TG.
01646    04B050 S310-SET.                                                CM000019
01647    04B070     IF O-SW1 = 1 GO TO I10TH.                            CM000019
0164B    04B0B0     IF O-SW2 = 1   IF I9 = SPACE  IF A17 = SPACE
01649    048081     GO TO S310-SET22  ELSE GO TO I10TH  ELSE GO TO I10TH.
01650    04B090     IF O-SW4 NOT = 1 GO TO I10TI.                        CM000019
```

30

```
01651   048091 S310-SET22.
01652   048100      IF THRU-SW NOT = S-ST1 GO TO I10TH.                    CM000019
01653   048110      MOVE B-ST TO S-ST2. MOVE 2 TO APT5 (APT-SUB).          CM000019
01654   048120 I10TH.                                                      CM000019
01655   048130      IF A13A NOT = SPACE OR A15A NOT = SPACE OR A18A NOT = SPACE  CM000019
01656 ** 4814       GO TO I10TI. PERFORM SQUID-ROUTINE.
01657   48141       MOVE B7 TO QPRTE (SQ-SUB)
01658   048150      MOVE 1 TO SCA-SW. MOVE S-ST2 TO QPRTF (SQ-SUB) GO TO I10TJ.
01659   048160 I10TI. MOVE B7 TO APT4 (APT-SUB).                           CM000019
01660   048170 I10TJ. ADD 1 TO APT-SUB. MOVE B8 TO APT2 (APT-SUB). PERFORM CM000019
01661   048180      PAT-M. MOVE B9 TO APT3 (APT-SUB). MOVE B8B TO B-ST.    CM000019
01662   048190 I10TK. PERFORM B-UPDATE. CLOSE B-FILE.                      CM000019
01663   048200      IF BT6B = B-ST MOVE BT7 TO APT4 (APT-SUB)
01664 **048200      OPEN I-O B-FILE  PERFORM BT-UPDATE
01665 ** 48200      PERFORM MI10TK THRU MI10TKX
01666   04820I      MOVE BT3 TO P10 (HK-SUB)
01667 **048201      CLOSE B-FILE
01668   048210      GO TO STA-CK. MOVE 102 TO CEB MOVE I1 TO CEA PERFORM C-WRIT  CM000019
01669   048220      GO TO STA-CK.                                          CM000019
01670 ** 48221 MI10TK.                                                     CM000019
01671    48222      IF B3TRRB = '0' OR '1' OR '2' OR '3' OR '4' OR '5' OR '6'
01672 ** 48222      OR '7' OR '8' OR '9' GO TO MI10TKX.
01673    48223      IF M-SW3 = 0                                           CM000019
01674    48224      MOVE 1 TO M-SW3                                        CM000019
01675    48225      MOVE BT3 TO M-6ST.
01676 ** 48222 MI10TKX.   EXIT.
01677   049010 I10TG.  IF B8B NOT = B-ST GO TO BK-RD.                      CM000019
01678   049020 S410-SET.
01679   049021      IF O-SW1 = 1 GO TO I10TL.
01680   049022      IF O-SW2 = 1   IF 19 = SPACE  IF A17 = SPACE
01681   049023      GO TO S410-SET22  ELSE GO TO I10TL  ELSE GO TO I10TL.
01682   049030      IF O-SW4 NOT = 1 GO TO I10TM.                          CM000019
01683   049031 S410-SET22.
01684   049040      IF THRU-SW = S-ST1 MOVE B-ST TO S-ST2                  CM000019
01685   049050      MOVE 2 TO APT5 (APT-SUB).                              CM000019
01686   049060 I10TL.  IF A13A NOT = SPACE OR A15A NOT = SPACE OR A18A NOT =  CM000019
01687   049070      SPACE OR A18B = SPACE GO TO I10TM. PERFORM SQUID-ROUTINE.  CM000019
01688 ** 49071      MOVE B8 TO QPRTF (SQ-SUB)
01689   049080      MOVE B9 TO QPRTE (SQ-SUB) MOVE 1 TO SCA-SW. GO TO I10TN.  CM000019
01690   049090 I10TM. MOVE B9 TO APT4 (APT-SUB).                           CM000019
01691 ** 4910  I10TN. ADD 1 TO APT-SUB. PERFORM PAT-M.
01692    4910I      MOVE B6 TO APT2 (APT-SUB)
01693   049110      MOVE B7 TO APT3 (APT-SUB). MOVE B6B TO B-ST. GO TO I10TK.  CM000019
01694 **036010 B-TABLE.                                                    CM000019
01695 ** 36011      MOVE 1 TO BSW-1.
01696    5021  STA-CK. SUBTRACT 1 FROM THRU-SW. IF THRU-SW = ZERO GO TO
01697    5022        PRINT-OUT.
01698   50222       IF SCA-SW = 1 SUBTRACT 1 FROM SQUID-COUNT MOVE ZERO TO
01699    5023       SCA-SW.
01700   050230      IF SQUID-COUNT = 0 MOVE 0 TO O-SWI O-SW2 O-SW4 S-STI
01701 **050230      MOVE SPACE TO S-ST2 S-ST3.
01702 ** 50231      PERFORM END-ALT.                                       CM000019
01703 ** 2025       MOVE ALN (THRU-SW) TO A-TEMP. PERFORM I-READ.
01704    5026       ADD 1 TO HK-SUB. GO TO ASQ-LK.
01705    5050  R-EXT. PERFORM OXX THRU HXX UNTIL THRU-SW < 2. GO TO ENDIT.  CM000019
01706    5051  OXX. READ I-FILE AT END GO TO I-END. SUBTRACT 1 FROM THRU-SW.
01707    5052  HXX. EXIT.                                                   CM000019
```

31

```
01708     5053  IA-END. GO TO I-END.
01709     5101  PRINT-OUT.
01710     5102        MOVE ZERO TO HK-SUB. MOVE ZERO TO PAT-SUB.                CM000019
01711     5107        PERFORM HK-ROUT THRU HK-PREX UNTIL HK-SUB > 5.            CM00
01712     5108        GO TO PAT-ROUT.                                           CM000019
01713     5109  HK-ROUT.                                                        CM000019
01714     5112        ADD 1 TO HK-SUB. IF P15 (HK-SUB) = 1 MOVE P1 (HK-SUB) TO  CM000019
01715     5113 -      PBT1 MOVE P2 (HK-SUB) TO PBT2 MOVE P3 (HK-SUB) TO PBT3    CM000019
01716     5114        MOVE P4 (HK-SUB) TO PBT4 MOVE P5A (HK-SUB) TO PBT5A
01717     51141       MOVE P5B (HK-SUB) TO PBT5B MOVE
01718     5115        P6 (HK-SUB) TO PBT6 MOVE P7 (HK-SUB) TO PBT7
01719     51151       MOVE PB (HK-SUB)
01720     5116 -      TO PBTB MOVE P9 (HK-SUB) TO PBT9 MOVE P10 (HK-SUB) TO PBT10  CM000019
01721     5117 -      MOVE P11 (HK-SUB) TO PBT11 MOVE P12 (HK-SUB) TO PBT12 MOVE   CM000019
01722     5118 -      P13 (HK-SUB) TO PBT13 MOVE P14 (HK-SUB) TO PBT14          CM000019
01723     51181       MOVE P1A (HK-SUB) TO PBT1A
01724     51182       MOVE P16 (HK-SUB) TO PBT15                                CM000019
01725 **  51171       MOVE P14 (HK-SUB) TO PZM
01726                  PERFORM CK-PZM
01727     51173       MOVE PZMP TO PBT14
01728     51174       MOVE  P12 (HK-SUB) TO PZM
01729    051175       PERFORM CK-PZM
01730 **  51178       MOVE PZMP  TO PBT12
01731     5119        WRITE HK-PRT FROM EOUT-PRT.
01732    051210 HK-PREX. EXIT.                                                  CM000019
01733 **  5201  PAT-ROUT.                                                       CM000019
01734     5205        PERFORM PT-ROUT THRU PTEX UNTIL PAT-SUB > 95. GO TO ENDIT.
01735     5206  PT-ROUT.                                                        CM000019
01736     5209        ADD 1 TO PAT-SUB. IF APT5 (PAT-SUB) = 1 GO TO PT-B.       CM000019
01737     5210        IF APT5 (PAT-SUB) NOT = 2 GO TO PTEX.                     CM000019
01738     5211        IF APT2 (PAT-SUB) = 'PB1      ' PERFORM PT-B ELSE
01739     52111       PERFORM BTP.   MOVE ZERO TO N-SUB.
01740     5212        PERFORM PT-S UNTIL N-SUB > 5. GO TO PTEX.
01741     5213  PT-S.
01742     52141       ADD 1 TO N-SUB                                            CM000019
01743     52142       IF QPRTD (N-SUB) = 1 IF QPRTF (N-SUB) = 'PB1      '
01744                 MOVE QPRTA (N-SUB)
01745     52151       TO PAT1 MOVE QPRTB (N-SUB) TO PAT1A MOVE QPRTC (N-SUB) TO  CM000019
01746     52152       PAT3 MOVE QPRTE (N-SUB) TO PAT4 MOVE QPRTF (N-SUB) TO PAT2
01747 **  52152       MOVE SPACE TO TAP1 TAP2 TAP3 TAP4  MOVE 0 TO TAP1A
01748 **  52152       ADD 1 TO SUB36 MOVE SUB36 TO PAT36 MOVE QPRTA (N-SUB) TO PZM
01749                 PERFORM CK-PZM
01750                 MOVE PZMP TO PZPAT
01751 **  52152       WRITE PAT-PRT FROM BOUT-PRT
01752                 ELSE PERFORM SQTP.
01753     52155 SQTP.
01754     52156       MOVE SPACE TO PAT1 PAT2 PAT3 PAT4 MOVE 0 TO PAT1A.
01755     52157       MOVE QPRTA (N-SUB) TO TAP1  MOVE QPRTB (N-SUB) TO TAP1A
01756     52158       MOVE QPRTC (N-SUB) TO TAP3  MOVE QPRTE (N-SUB) TO TAP4
01757     52159       MOVE QPRTF (N-SUB) TO TAP2.
01758 **  52158       ADD 1 TO SUB36 MOVE SUB36 TO PAT36 MOVE QPRTA (N-SUB) TO PZM
01759                 PERFORM CK-PZM
01760                 MOVE PZMP TO PZPAT
01761     52159       WRITE PAT-PRT FROM BOUT-PRT.
01762     52211 BTP.
01763     52212       MOVE SPACE TO PAT1 PAT2 PAT3 PAT4 MOVE 0 TO PAT1A.
01764     52213       MOVE APT1 (PAT-SUB) TO TAP1. MOVE APT1A (PAT-SUB) TO TAP1A.
```

32

```
01765     52214      MOVE APT2 (PAT-SUB) TO TAP2. MOVE APT3 (PAT-SUB) TO TAP3.
01766     52215      MOVE APT4 (PAT-SUB) TO TAP4.
01767  ** 52214      ADD 1 TO SUB36 MOVE SUB36 TO PAT36 MOVE APT1 (PAT-SUB) TO PZM
01768                PERFORM CK-PZM
01769                MOVE PZMP TO PZPAT
01770     52216      WRITE PAT-PRT FROM BOUT-PRT.
01771    052160 PT-B.                                                    CM000019
01772  ** 52161      IF APT2 (PAT-SUB) = 'PB1      ' NEXT SENTENCE ELSE
01773     52162      PERFORM BTP GO TO PTEX.
01774  ** 52161      MOVE APT1 (PAT-SUB) TO PAT1. MOVE APT1A (PAT-SUB) TO PAT1A.  CM000019
01775    052170      MOVE APT2 (PAT-SUB) TO PAT2. MOVE APT3 (PAT-SUB) TO PAT3.    CM000019
01776    052180      MOVE APT4 (PAT-SUB) TO PAT4.                                 CM000019
01777  ** 52190      MOVE SPACE TO TAP1 TAP2 TAP3 TAP4 MOVE 0 TO TAP1A.
01778  ** 52180      ADD 1 TO SUB36 MOVE SUB36 TO PAT36 MOVE APT1 (PAT-SUB) TO PZM
01779                PERFORM CK-PZM
01780                MOVE PZMP TO PZPAT
01781      5221      WRITE PAT-PRT FROM BOUT-PRT.
01782    052200 PTEX. EXIT.                                                   CM000019
01783    053010 ENOIT.                                                        CM000019
01784  ** 53011      MOVE 0 TO SUB36
01785      5302      MOVE ZERO TO C-SW.
01786    053021      MOVE ZERO TO SQ-SUB.                                     CM000019
01787  ** 5308       MOVE ZERO TO PB-SW2.
01788    053090      MOVE ZERO TO O-SW1. MOVE ZERO TO O-SW2. MOVE ZERO TO O-SW4.  CM000019
01789  ** 5310       MOVE ZERO TO THRU-SW. MOVE ZERO TO P-CNT. MOVE ZERO TO CSW-1.CM000019
01790            CK-MULTOUT.                                                  CM000019
01791                IF M-SW1 = 1 OR M-SW2 = 1 OR M-SW3 = 1 NEXT SENTENCE ELSE  CM000019
01792                GO TO M-BACK.                                            CM000019
01793                OPEN I-O B-FILE.
01794            RD-MBFILE.                                                   CM000019
01795                READ B-FILE AT END GO TO MUL-END.                        CM000019
01796                IF B3RRA = M-ST1 OR B3RRA = M-ST2 OR B3RRA = M-ST3       CM000019
01797                OR B3RRA = M-ST4 OR B3RRA = M-ST5 OR B3RRA = M-ST6       CM000019
01798                NEXT SENTENCE ELSE GO TO RD-MBFILE.
01799                IF B3RRB = '0' OR '1' OR '2' OR '3' OR '4' OR '5' OR '6'
01800                OR '7' OR '8' OR '9' GO TO RD-MBFILE.
01801                PERFORM B-TABLE.   IF BSW-1 = 1 PERFORM B-UPDATE.
01802                GO TO RD-MBFILE.
01803            MUL-END.                                                     CM000019
01804                CLOSE B-FILE.                                            CM000019
01805                MOVE 0 TO M-SW1 M-SW2 M-SW3.                             CM000019
01806                MOVE '9999' TO M-ST1 M-ST2 M-ST3 M-ST4 M-ST5 M-ST6.
01807            M-BACK.
01808     53101      MOVE ZERO TO CSW-2. MOVE SPACE TO B-ST. MOVE SPACE TO R-ST.  CM000019
01809     53102      MOVE ZERO TO PB-SW1.
01810     53104      MOVE ZERO TO HK-SUB. MOVE ZERO TO AL-SUB. MOVE ZERO TO BSW-1.CM000019
01811     53105      MOVE ZERO TO BSW-2. MOVE ZERO TO PAT-SUB.                CM000019
01812     53106      MOVE ZERO TO N-SUB.
01813  ** 53106      MOVE 0 TO S-ST1.
01814    053107      MOVE 0 TO APT-SUB.
01815    053108      MOVE SPACE TO S-ST2.
01816    053109      MOVE 0 TO SQUID-COUNT SCA-SW.
01817  ** 5310A END-ALT.                                                      CM000019
01818     5310B      MOVE ZERO TO PB-SW1 PB-SW2 STA-SW.
01819     5310C      MOVE SPACE TO B-ST R-ST.                                 CM000019
01820     53107      ALTER I7AA TO PROCEED TO I7HA.
01821     53108      ALTER APB-SET TO PROCEED TO BPB-SET.
```

33

```
01822    53109      ALTER GJMP TO PROCEED TO IJMP.
01823    5311       ALTER I9GC TO PROCEED TO I9HC.
01824    53111      ALTER I9BO TO PROCEED TO I9BE.
01825    53112      ALTER I10CA TO PROCEED TO I100A.
01826    53113      ALTER I10CB TO PROCEED TO I100B.
01827    53114 WH-TO.
01828 ** 5310       GO TO A-OPEN.
01829   053120 I-END.                                                CM000019
01830 ** 53122      OPEN OUTPUT O-CARD.                              CM000019
01831   053123      CLOSE A-FILE.
01832   053124      IF CF-SW = 0 CLOSE C-FILE.
01833 **  803       OPEN INPUT A-FILE.
01834     8031      WRITE PRT-REC FROM AAAA-HD  AFTER AAAA-H.
01835     8032      GO TO AJECT.
01836   00804  READ-A.                                               CM000020
01837   00805      READ A-FILE AT END GO TO START-B.                CM000020
01838 **  8051      MOVE A-CARD TO A-TEMP.
01839   00806      MOVE A1  TO A1H        MOVE A1B  TO A1BH
01840   00807      MOVE A2  TO A2H        MOVE A3  TO A3H
01841   00808      MOVE A4  TO A4H        MOVE A5  TO A5H
01842   00809      MOVE A6  TO A6H        MOVE A7  TO A7H
01843   00810      MOVE A8  TO A8H        MOVE A9  TO A9H
01844   00811      MOVE A10  TO A10H      MOVE A11  TO A11H
01845   00812      MOVE A12  TO A12H      MOVE A13  TO A13H
01846   00813      MOVE A14  TO A14H      MOVE A15  TO A15H
01847   00814      MOVE A16  TO A16H      MOVE A17  TO A17H
01848   00815      MOVE A18  TO A18H      MOVE A19  TO A19H
01849   00816      MOVE A20  TO A20H      MOVE A21  TO A21H
01850   00817      WRITE PRT-REC FROM BA-HD AFTER 8AA.              CM000020
01851 **  8171      MOVE ' ' TO 8AA.
01852   00818      ADD 1 TO A-CT.                                   CM000020
01853   00819      IF A-CT > 49 GO TO AJECT.                        CM000020
01854   00820      GO TO READ-A.                                    CM000020
01855   00821  AJECT.                                               CM000020
01856 **  8211      MOVE 0 TO A-CT.
01857   00822      WRITE PRT-REC FROM AA-HD AFTER AAA.              CM000020
01858   00823      WRITE PRT-REC FROM AAA-HD AFTER AAAA.            CM000020
01859 **  8231      MOVE '0' TO BAA.
01860   00824      MOVE '1' TO AAA.                                 CM000020
01861   00825      GO TO READ-A.                                    CM000020
01862 **   01  START-B.                                             CM000020
01863              CLOSE A-FILE.
01864      03      OPEN I-O  8-FILE.  WRITE PRT-REC FROM ABB8-HD AFTER 0.  CM000020
01865              MOVE 50 TO 8-CT.
01866      05      GO TO 8-JECT.                                    CM000020
01867      06  READ-8C.                                             CM000020
01868      10      READ B-FILE AT END GO TO START-C.
01869      16  BO. MOVE 81  TO B1H        MOVE 82  TO 82H
01870      17      MOVE 83  TO 83H        MOVE 84  TO B4H
01871      18      MOVE B5  TO B5H        MOVE B6  TO B6H
01872      19      MOVE 87  TO 87H        MOVE 88  TO BBH
01873      20      MOVE B9  TO 89H        MOVE B10  TO B10H
01874      21      MOVE 811  TO B11H
01875 **   II      WRITE PRT-REC FROM BB-HD AFTER 8BB.
01876      222     MOVE ' ' TO 8BB.
01877      23      ADD 1 TO B-CT                                    CM000020
01878      24      PERFORM 8-JECT.                                  CM000020
```

34

```
                GO TO READ-BC.
**    05  B-JECT.                                                    CM000020
      06      IF B-CT > 49                                           CM000020
                MOVE 0 TO B-CT
      07        WRITE PRT-REC FROM AB-HD AFTER AB8                   CM000020
      08        MOVE '1' TO AB8                                      CM000020
**    061       MOVE '0' TO B88
      09        WRITE PRT-REC FROM A88-HD AFTER A88B.                CM000020
      10  81GO.  GO TO READ-BC.                                      CM000020
**    03  START-C.                                                   CM000020
      04        CLOSE B-FILE.                                        CM000020
                OPEN 1-O C-FILE.
      06        WRITE PRT-REC FROM ACCC-HD AFTER 0.                  CM000020
      07        MOVE 50 TO C-CT.                                     CM000020
      08        GO TO C-JECT.                                        CM000020
            PASFOUR.
                READ C-FILE AT END GO TO CFEND.
      09  READ-CF.                                                   CM000020
      10        READ C-FILE AT END GO TO CFEND.                      CM000020
                IF IFCLIST = '0' GO TO ONLY-ASGIN.
      16  CO.  MOVE C1  TO C1H
      17        MOVE C3  TO C3H      MOVE C4A  TO C4AH
      18        MOVE C4B  TO C4BH    MOVE C4C  TO C4CH
      19        MOVE C5  TO  C5H     MOVE C6  TO  C6H
      20        MOVE C7A  TO C7AH    MOVE C78  TO C7BH
      21        MOVE C8  TO  C8H     MOVE C9   TO C9BH
      22                             MOVE C10A  TO C10AH
                MOVE C11A TO C11AH.
      24        MOVE C11B  TO C11BH   MOVE C12  TO C12H
**    01        WRITE PRT-REC FROM BC-HD AFTER BCC.
      012       MOVE ' ' TO BCC.
      02        ADD 1 TO C-CT                                        CM000020
      03        PERFORM C-JECT.                                      CM000020
      04  GOC.    GO TO READ-CF.                                     CM000020
      09  C-JECT.                                                    CM000020
      10        IF C-CT > 49  MOVE 0 TO C-CT                         CM000020
      111       MOVE '0' TO BCC
**    11        WRITE PRT-REC FROM AC-HD AFTER ACC                   CM000020
      12        MOVE '1' TO ACC                                      CM000020
      13        WRITE PRT-REC FROM ACC-HD AFTER ACCC.                CM000020
**    08        GO TO READ-CF.                                       CM000020
            ONLY-ASGIN.
                IF C9 NOT = '0' GO TO READ-CF.
                IF C1 NOT = TSTCELL GO TO READ-CF.
                IF C5 = SPACE GO TO READ-CF.
                PERFORM CO.
                PERFORM PASFOUR.
                PERFORM CO.
                PERFORM PASFOUR.
                PERFORM CO.
                PERFORM PASFOUR.
                PERFORM CO.
                PERFORM PASFOUR.
                PERFORM CO.
                GO TO READ-CF.
      19  CFEND.                                                     CM000020
**    02        CLOSE C-FILE.                                        CM000020
```

35

```
01936     53181      GO TO PEO.
01937           CK-PZM.
01938                IF PZ4 = SPACE   IF PZ3 = SPACE
01939                IF PZ2 = SPACE   IF PZ1 = SPACE
01940                MOVE SPACE TO PZMP1 PZMP2 PZMP3 PZMP4
01941                ELSE MOVE PZ1 TO PZMP4 MOVE SPACE TO PZMP1 PZMP2 PZMP3
01942                ELSE MOVE PZ1 TO PZMP3 MOVE PZ2 TO PZMP4
01943                MOVE SPACE TO PZMP1 PZMP2
01944                ELSE MOVE PZ1 TO PZMP2       MOVE PZ2 TO PZMP3
01945                MOVE PZ3 TO PZMP4  MOVE SPACE TO PZMP1
01946                ELSE MOVE PZ1 TO PZMP1
01947                MOVE PZ2 TO PZMP2   MOVE PZ3 TO PZMP3   MOVE PZ4 TO PZMP4.
01948           BCK-PZM.
01949                IF PZ3 = SPACE  IF PZ2 = SPACE  IF PZ1 = SPACE
01950                MOVE SPACE TO PZMP1 PZMP2 PZMP3
01951                ELSE MOVE PZ1 TO PZMP3 MOVE SPACE TO PZMP1 PZMP2
01952                ELSE MOVE PZ2 TO PZMP3 MOVE PZ1 TO PZMP2 MOVE SPACE TO PZMP1
01953                ELSE MOVE PZ1 TO PZMP1 MOVE PZ2 TO PZMP2 MOVE PZ3 TO PZMP3.
01954     5323   PEO. CLOSE I-FILE. CLOSE PRT-A. CLOSE PRT-B. CLOSE O-CARD.      CM000019
01955                OPEN I-O B-FILE.  OPEN OUTPUT B-UPTAPE.
01956           B-PEO.
01957                READ B-FILE AT END GO TO C-PEO.
01958                WRITE B-UPTAPER FROM B-CARD.
01959                GO TO B-PEO.
01960           C-PEO.
01961                CLOSE B-FILE B-UPTAPE.
01962                OPEN I-O C-FILE OUTPUT C-UPTAPE.
01963           C-PEOR.
01964                READ C-FILE AT END GO TO C-PEOEND.
01965                WRITE C-UPTAPER FROM C-CARD.
01966                GO TO C-PEOR.
01967           C-PEOEND.
01968                CLOSE C-FILE C-UPTAPE.
01969 ** 1061        STOP RUN.
01970    077010 1.
01971    077011      MOVE 77 TO FLIP-SW.
01972    077072      IF I10A = 'M' IF I10B = 'T' GO TO 2.
01973 **077030       IF I10A = 'D' GO TO 3.
01974    077040      IF I10A = 'M' IF I10B = 'R' GO TO  4.
01975    077050      IF I10A = 'E' IF I10B = 'R' GO TO  4.
01976    077070      DISPLAY '077070  ' I10.
01977 ** 77080       GO TO STA-CK.
01978    077100 2.
01979    077110      ALTER I7AA TO PROCEED TO 21.
01980    077120      GO TO B7-OPEN.
01981    077130 21.
01982    077140      IF I10AR NOT = B3RA GO TO B7-RD.
01983    077150      IF I10D NOT = N-B3 GO TO B7-RO.
01984    077151      IF A20A = 'MT' GO TO 22.
01985    077160      GO TO BTAB-LK.
01986    077161 22.
01987    077162      IF A20B = SPACE GO TO BTAB-LK.
01988    077163      IF A20B NOT = B5B GO TO B7-RO.
01989    077164      GO TO BTAB-LK.
01990    077170 3.
01991    077180      ALTER I7AA TO PROCEED TO 31.
01992    077190      GO TO B7-OPEN.
```

36

```
01993   077200 31.
01994   077210        IF I10ARR NOT = B3A GO TO B7-RD.
01995                 IF I10C NOT = N-B3 GO TO B7-RD.
01996   077220        IF B5BRR NOT = I10D GO TO B7-RD.
01997   077230        IF B5CRR NOT = I10E GO TO B7-RD.
01998   077240        GO TO BTAB-LK.
01999   078010 4.
02000   078020        ALTER I7AA TO PROCEED TO 41.
02001   078030        GO TO B7-OPEN.
02002   078040 41.
02003   078050        IF I10AR NOT = B3RA GO TO B7-RD.
02004   078060        IF I10D NOT = N-B3 GO TO B7-RD.
02005   078080        GO TO BTA8-LK.
```

```
00001   001010 IDENTIFICATION DIVISION.                                    CM000036
00002   001020 PROGRAM-ID. 'CM000036'.                                     CM000036
00003   001030 AUTHOR. J M ROSE.                                           CM000036
00004   001040 ENVIRONMENT DIVISION.                                       CM000036
00005   001050 CONFIGURATION SECTION.                                      CM000036
00006   001060 SOURCE-COMPUTER.  IBM-360  H50.                             CM000036
00007   001070 OBJECT-COMPUTER.  IBM-360  H50.                             CM000036
00008   001080 INPUT-OUTPUT SECTION.                                       CM000036
00009   001090 FILE-CONTROL.                                               CM000036
00010   001100         SELECT PAT-IN ASSIGN 'P001' UTILITY.                CM000036
00011   001110         SELECT HK-IN  ASSIGN 'H001' UTILITY.                CM000036
00012   001120         SELECT LISTT  ASSIGN 'L001' UTILITY.                CM000036
00013   001121         SELECT SHK-IN ASSIGN 'S001' UTILITY.                CM000036
00014   001122         SELECT OT-PAT ASSIGN 'OP001' UTILITY.
00015   001123         SELECT OT-HK  ASSIGN 'OH001' UTILITY.
00016                    SELECT A-FILE   ASSIGN  'AFILEREC' UTILITY.
00017                    SELECT A-UPTAPE  ASSIGN 'ATAPE' UTILITY.
00018   001130 DATA DIVISION.                                              CM000036
00019   001140 FILE SECTION.                                               CM000036
00020   001150 FD  PAT-IN      RECORDING F   BLOCK 1 RECORDS    RECORD 133 CM000036
00021   001160                 LABEL RECORDS STANDARD    DATA RECORD PIN. CM000036
00022   001170 01  PIN.                                                    CM000036
00023   001180     02  CCP      PICTURE X.                                 CM000036
00024   001190     02  FILLER1 PICTURE X(126).
00025   001200     02  PCC      PICTURE 99.
00026   001210     02  PITM     PICTURE XXXX.
00027   002010 FD  HK-IN       RECORDING F    BLOCK 1 RECORDS    RECORD 133 CM000036
00028   002020                  LABEL RECORDS STANDARD    DATA RECORD HIN. CM000036
00029   002030 01  HIN.                                                    CM000036
00030   002040     02  ALL-HIN     PICTURE  X(133).
00031   002050 FD  SHK-IN      RECORDING F    BLOCK 1 RECORDS    RECORD 133 CM000036
00032   002060                  LABEL RECORDS STANDARD    DATA RECORD CIN. CM000036
00033   002070 01  CIN.                                                    CM000036
00034   002080     02  FILLER  PICTURE  X.                                CM000036
00035   002090     02  CPAR    PICTURE  X(9).                             CM000036
00036   002100     02  FILLER  PICTURE  X(39).                            CM000036
00037   002110     02  CDEV    PICTURE  X(9).                             CM000036
00038   002120     02  FILLER  PICTURE  X.                                CM000036
00039   002130     02  CPT     PICTURE  X(7).                             CM000036
00040   002140     02  FILLER  PICTURE  XX.                               CM000036
00041   002150     02  CUDC    PICTURE  X(5).                             CM000036
00042   002151     02  FILLER  PICTURE  XX.
00043   002152     02  CUDCC   PICTURE   XXXX.
00044   002153     02  FILLER  PICTURE   XXX.
00045   002154     02  CSIGC   PICTURE   XXXXX.
00046   002160     02  FILLER  PICTURE X(11).
00047   002161     02  ROUT.
00048   002162         03  ROT1     PICTURE XX.
00049   002163         03  ROT2     PICTURE XXX.
00050   002164         03  RRT2     REDEFINES ROT2  PICTURE 999.
00051   002165     02  FILLER  PICTURE X(10).
00052   002170     02  CCAB    PICTURE  XXXX.
00053   002180     02  FILLER  PICTURE X(6).
00054   002181     02  CITEM  PICTURE XXXX.
```

2

```
00055  002182     02  FILLER  PICTURE X(6).
00056  003010 FD  LISTT       RECORDING F    BLOCK 1 RECORDS    RECORD 133     CM000036
00057  003020                  LABEL RECORDS STANDARD    DATA RECORD LIT.      CM000036
00058  003030 01  LIT.                                                          CM000036
00059  003040     02  FILLER  PICTURE  X(133).                                 CM000036
00060  003050 FD  OT-PAT  RECORDING F BLOCK  1 RECORDS RECORD 133  LABEL
00061  003060              RECORDS STANDARD  DATA RECORD OPOUT.
00062  003070 01  OPOUT  PICTURE  X(133).
00063  003080 FD  OT-HK  RECORDING F BLOCK 1  RECORDS RECORD 133  LABEL
00064  003090              RECORDS STANDARD  DATA RECORD OHOUT.
00065  003100 01  OHOUT  PICTURE X(133).
00066          FD  A-UPTAPE   RECORDING F  BLOCK 1  RECORDS  RECORD  80
00067                         LABEL RECORDS STANDARD  DATA RECORD A-UPTAPER.
00068          01  A-UPTAPER   PICTURE  X(80).
00069          FD  A-FILE       RECORDING F  BLOCK 45 RECORDS   RECORD 80
00070                          LABEL RECORDS STANDARD   DATA RECORD A-CARD.
00071          01  A-CARD   PICTURE  X(80).
00072  004010 WORKING-STORAGE SECTION.                                          CM000036
00073  004020 77  PEJECT  PICTURE  99  COMPUTATIONAL-3  VALUE 51.               CM000036
00074  004030 77  CABCNT  PICTURE XXX     VALUE SPACE.
00075  004050 77  TSW1    PICTURE 9 VALUE 0.
00076  004060 77  TSW2    PICTURE 9 VALUE 0.
00077  004070 77  TSW3    PICTURE 9 VALUE 0.
00078  004080 77  TSW4    PICTURE 9 VALUE 0.
00079  004090 77  I       PICTURE 999  VALUE 0.
00080  004091 77  J       PICTURE 9    VALUE 0.
00081  004092 77  K       PICTURE S999    VALUE 0.
00082  004110 01  LISTW.                                                        CM000036
00083  004120     02  LCC     PICTURE X.                                        CM000036
00084  004130     02  FILLER2 PICTURE X(127).                                   CM000036
00085  004140     02  FILLER  PICTURE X(5)   VALUE SPACE.                       CM000036
00086  005010 01  CAB-LINE.                                                     CM000036
00087  005020     02  FILLER  PICTURE X(61) VALUE '          CAB       FROM
00088  005030-    '           TO              WIRED '.
00089  005031     02  FILLER  PICTURE X(9) VALUE '     ITEM'.
00090  005040     02  FILLER  PICTURE X(63)  VALUE SPACE.
00091  005050 01  FAB-LINE.                                                     CM000036
00092  005060     02  FILLER  PICTURE X(60) VALUE '          FAB       TRANSDUCER
00093  005070-    '  DEVICE       POINT        S.C. '.
00094  005071     02  FILLER  PICTURE X(8) VALUE '      NO'.
00095  005080     02  FILLER  PICTURE X(65)  VALUE SPACE.
00096  005090 01  CAB-HEAD.                                                     CM000036
00097  005100     02  FILLER  PICTURE X(39) VALUE '
00098  005110-    ' CABLE FABS'.
00099  005120     02  FILLER  PICTURE X(94) VALUE SPACE.
00100  005130 01  CAB-LIST.                                                     CM000036
00101  005140     02  FILLER  PICTURE   X(9)   VALUE SPACE.                     CM000036
00102  005150     02  LCAB    PICTURE   XXXX.
00103  005160     02  FILLER  PICTURE   X(6)   VALUE SPACE.                     CM000036
00104  005161     02  LPAR    PICTURE X(9).
00105  005162     02  FILLER  PICTURE XXXX  VALUE SPACE.
00106  005170     02  LDEV    PICTURE   X(9).                                   CM000036
00107  005180     02  FILLER  PICTURE  XXX   VALUE SPACE.
00108  005190     02  LPT     PICTURE   X(7).                                   CM000036
00109  005200     02  FILLER  PICTURE   X(5)   VALUE SPACE.                     CM000036
00110  005210     02  LUOC    PICTURE   X(5)   VALUE SPACE.                     CM000036
00111  005211     02  FILLER  PICTURE X(6) VALUE SPACE.
```

3

```
005212      02  LITEM   PICTURE  XXXX.
005220      02  FILLER  PICTURE X(63)  VALUE SPACE.
006010 01   AOUT-PRT.                                                  CM000036
006020      02  FILLER  PICTURE   X(7)   VALUE SPACES.                 CM000036
006030      02  FILLER  PICTURE   X(16)  VALUE 'C              '.      CM000036
006040      02  FILLER  PICTURE   X(12)  VALUE 'FROM      TO'.         CM000036
006050      02  FILLER  PICTURE   X(48)  VALUE SPACE.                  CM000036
006060      02  FILLER  PICTURE   X(50)  VALUE 'C              FROM   CM000036
006070-     ' TO                    '.                                 CM000036
006080 01   AAOUT-PRT.                                                 CM000036
006090      02  FILLER  PICTURE   X(23) VALUE ' ITEM  C   DEVICE      '. CM000036
006100      02  FILLER  PICTURE   X(15) VALUE 'POINT     POINT'.        CM000036
006110      02  FILLER  PICTURE   X(39) VALUE SPACE.                   CM000036
006120      02  FILLER  PICTURE   X(56) VALUE 'ITEM  C   DEVICE      POINCM000036
006130-     'T     POINT                  '.                            CM000036
007010 01   DOUT-PRT.                                                  CM000036
007020      02  FILLER PICTURE X(27) VALUE ' PARAMETER C NOMENCLATURE  '.CM000036
007030      02  FILLER PICTURE X(26) VALUE '              1-NO.    DEVI'. CM000036
007040      02  FILLER PICTURE X(26) VALUE 'CE     POINT    S.C.   CARO'. CM000036
007050      02  FILLER PICTURE X(26) VALUE '   COND.   COND.   READOUT'. CM000036
007060      02  FILLER PICTURE X(26) VALUE '   NO.  FAB  SK.   NO   C '. CM000036
007070      02  FILLER PICTURE X(2)  VALUE '  '.                        CM000036
007080 01   COUT-PRT.                                                  CM000036
007090      02  FILLER PICTURE X(27) VALUE '            C              '.CM000036
007100      02  FILLER PICTURE X(26) VALUE '              TRAN        '. CM000036
007110      02  FILLER PICTURE X(26) VALUE 'CONNECTING     WIRED  UDC '. CM000036
007120      02  FILLER PICTURE X(26) VALUE '   SIG.    SIG.           '. CM000036
007130      02  FILLER PICTURE X(26) VALUE '   TYP  CAB  LOC  ITEM  C '. CM000036
007140      02  FILLER PICTURE XX    VALUE SPACE.                       CM000036
007150 01   GOUT-PRT.
007160      02  FILLER  PICTURE X(34)  VALUE '            PATCHING - PB1
007170-     '       '.
007180      02  FILLER  PICTURE X(45)  VALUE SPACE.
007190      02  FILLER PICTURE X(31)  VALUE '          PATCHING - P82
007200-     '   '.
007210      02  FILLER  PICTURE  X(22)  VALUE SPACE.
007220 01   FOUT-PRT.
007230      02  FILLER  PICTURE X(54)  VALUE SPACE.
007240      02  FILLER  PICTURE X(25) VALUE '   HOOKUP INFORMATION    '.
007250      02  FILLER  PICTURE  X(54)  VALUE SPACE.
         01 LISTER.
            02  FILLER  PICTURE  X(117).
            02  ILLER4     PICTURE   XX.
            02  FILLER  PICTURE  XX.
            02  ILLER3   PICTURE  XX.
            02  FILLER  PICTURE   XXXX.
            02  ILLER2   PICTURE    XX.
            02  FILLER   PICTURE  X.
            02  ILLER1   PICTURE  XXX.
008010 01   TABLES.
008020      02  TB1 OCCURS 4.
008030          03  TP      PICTURE   X(9)  OCCURS 100.
008040          03  TI      PICTURE   X(4)  OCCURS 100.
008050          03  TA      PICTURE   9(3)  OCCURS 100.
008060 01   DHEAD1.
008061      02  FILLER  PICTURE  X(4)   VALUE SPACE.
008070      02  FILLER  PICTURE X(73)   VALUE '  MICROSADIC REFERENCE SHE
```

4

```
008080-     'ET          PROJECT                  SHEET    OF L'.
008090      02  FILLER  PICTURE  X(55)  VALUE SPACE.
008100 01   DHEA02.
008101      02  FILLER  PICTURE  X(4)   VALUE SPACE.
008110      02  FILLER  PICTURE X(6) VALUE '  SCAN'.
008120      02  FILLER  PICTURE X(19) VALUE SPACE.
008130      02  FILLER  PICTURE X(4)  VALUE 'ITEM'.
008140      02  FILLER  PICTURE X(29) VALUE SPACE.
008150      02  FILLER  PICTURE X(4)  VALUE 'AMP.'.
008160      02  FILLER  PICTURE  X(56)  VALUE SPACE.
008170 01   DHEA03.
008171      02  FILLER  PICTURE  X(4)   VALUE SPACE.
008180      02  FILLER  PICTURE X(73) VALUE '  SEQ.     PARAMETER     NO.
008190-     '      CAL STEP     COUNTS     NO.     REMARKS'.
008200      02  FILLER  PICTURE  X(55)  VALUE SPACE.
009010 01   DGLIST.
009020      02  FILLER  PICTURE  X(6)   VALUE SPACE.
009030      02  DGSS    PICTURE 999.
009040      02  FILLER  PICTURE X(6) VALUE SPACE.
009050      02  DGPAR   PICTURE X(9).
009060      02  FILLER  PICTURE X(5) VALUE SPACE.
009070      02  OGIT    PICTURE X(4).
009080      02  FILLER  PICTURE X(29)  VALUE SPACE.
009090      02  OGAM    PICTURE  999.
009100      02  FILLER  PICTURE  X(67)  VALUE SPACE.
**008010 PROCEDURE DIVISION.                                          CM000036
008020 BEGP.                                                          CM000036
008021      MOVE 1 TO J.
008022      MOVE -1 TO K.
008023      PERFORM DOTA8 VARYING I FROM 1 BY 1 UNTIL I = 101.
008024      MOVE 2 TO J
008025      MOVE 399 TO K
008026      PERFORM DOTA8 VARYING I FROM 1 BY 1 UNTIL 1 = 101.
008027      MOVE 3 TO J
008028      MOVE 99 TO K
008029      PERFORM DOTA8 VARYING I FROM 1 BY 1 UNTIL I = 101.
008030      MOVE 4 TO J
008031      MOVE 399 TO K
008032      PERFORM DOTA8 VARYING I FROM 1 BY 1 UNTIL I = 101.
**008021    OPEN OUTPUT OT-PAT.
008030      OPEN INPUT PAT-IN OUTPUT LISTT.  GO  TO  P-JECT.          CM000036
008031 DOTA8.
008032      ADD 1 TO K GIVING K
008033      MOVE K TO TA (J, I).
008034      MOVE SPACE TO TP (J, I)  TI (J, I).
008040 READ-P.                                                        CM000036
008050      READ PAT-IN AT END GO TO BEGH.                            CM000036
008060      MOVE FILLER1 TO FILLER2.                                  CM000036
008070      WRITE LIT FROM LISTW  AFTER 2.                            CM000036
008071      WRITE OPOUT FROM PIN.
008080      ADD 2 TO PEJECT.                                          CM000036
008100 P-JECT.                                                        CM000036
008110      IF PEJECT > 50  WRITE LIT FROM GOUT-PRT AFTER 0           CM000036
008120      WRITE LIT FROM  AOUT-PRT AFTER 2                          CM000036
008130      WRITE LIT FROM AAOUT-PRT AFTER 1                          CM000036
008140      MOVE 0 TO PEJECT.                                         CM000036
008150      GO TO READ-P.                                             CM000036
```

5

```
00226   008160 BEGH.                                                    CM000036
00227   008170     CLOSE PAT-IN.        MOVE 51 TO PEJECT.               CM000036
00228   008171     CLOSE OT-PAT  OPEN OUTPUT OT-HK.
00229   008180     OPEN INPUT HK-IN.   GO TO H-JECT.                     CM000036
00230   008190 READ-H.                                                  CM000036
00231   008200     READ HK-IN AT END GO TO BEGLH.                        CM000036
00232   008210     MOVE ALL-HIN TO LISTER.
00233   008211     MOVE SPACE TO ILLER1 ILLER2 ILLER3 ILLER4.
00234   008220     WRITE LIT FROM LISTER AFTER 2.
00235   008221     WRITE OHOUT FROM HIN.
00236   008230     ADD 2 TO PEJECT.                                      CM000036
00237   009010 H-JECT.                                                  CM000036
00238   009020     IF PEJECT > 50  WRITE LIT FROM FOUT-PRT AFTER 0       CM000036
00239   009030     WRITE LIT FROM COUT-PRT AFTER 2                       CM000036
00240   009040     WRITE LIT FROM DOUT-PRT AFTER 1                       CM000036
00241   009050     MOVE 0 TO PEJECT.                                     CM000036
00242   009060     GO TO READ-H.                                         CM000036
00243   009070 BEGLH.                                                   CM000036
00244   009080     CLOSE HK-IN.                                          CM000036
00245   009081     CLOSE OT-HK.
00246   009090     OPEN INPUT SHK-IN.                                    CM000036
00247              MOVE 51 TO PEJECT.  GO TO L-JECT.
00248   009120 READ-L.                                                  CM000036
00249   009130     READ SHK-IN AT END GO TO EOF.                         CM000036
00250   009131     PERFORM DGTAL THRU DEX.
00251   009140     IF CCA8 = SPACE GO TO READ-L.                         CM000036
00252   009150     MOVE CCA8 TO LCA8.                                    CM000036
00253   009151     MOVE CPAR TO LPAR.
00254   009152     MOVE CITEM TO LITEM
00255   009160     MOVE COEV TO LOEV.                                    CM000036
00256   009170     MOVE CPT . TO LPT.                                    CM000036
00257   009180     MOVE CUOC TO LUOC.                                    CM000036
00258   009181     IF CUOC = SPACE MOVE CSIGC TO LUOC.
00259   009190     WRITE LIT FROM CAB-LIST AFTER 2.                      CM000036
00260   009200     ADD 2 TO PEJECT.                                      CM000036
00261   009210 L-JECT.                                                  CM000036
00262   009220     IF PEJECT > 50 WRITE LIT FROM CAB-HEAD AFTER 0        CM000036
00263   009230     WRITE LIT FROM CAB-LINE AFTER 2                       CM000036
00264   009240     WRITE LIT FROM FAB-LINE AFTER 1                       CM000036
00265   009250     MOVE 0 TO PEJECT.   GO TO READ-L.                     CM000036
00266   010010 EOF.                                                     CM000036
00267              OPEN I-O A-FILE.  OPEN OUTPUT A-UPTAPE.
00268          A-PED.
00269              READ A-FILE AT END GO TO A-PEDEND.
00270              WRITE A-UPTAPER FROM A-CARD.
00271              GO TO A-PED.
00272          A-PEDEND.
00273   014        PERFORM TAKOUT THRU TEX
00274              CLOSE A-FILE A-UPTAPE.
00275 **010020     CLOSE SHK-IN LISTT.                                   CM000036
00276   010030     STOP RUN.                                             CM000036
00277   011010 DGTAL.
00278   011020     IF ROT1 NOT = 'MC' GO TO DEX.
00279   011030     IF RRT2 < 100 GO TO DG100.
00280   011040     IF RRT2 < 200 GO TO DG200.
00281   011050     IF RRT2 < 400 GO TO DG400.
00282   011060     IF RRT2 > 499 GO TO DG500.   MOVE 2 TO J MOVE 0 TO I.
```

```
00283   011070      PERFORM INTB THRU INX.   MOVE 4 TO J  MOVE 0 TO I.
00284   011080      PERFORM INTB THRU INX.
00285   011090      MOVE 1 TO TSW2 TSW4.
00286   011100      GO TO DEX.
00287   011110 INTB.    ADD 1 TO I.
00288   011120      IF I > 100 DISPLAY 'I>100' GO TO INX.
00289   011130      IF TA (J, I) = RRT2  MOVE CPAR TO TP (J, I)
00290   011140          MOVE CITEM TO TI (J, I) GO TO INX.
00291   011150      GO TO INTB.
00292   011160 INX.  EXIT.
00293   011170 OG100.
00294   011180      MOVE 0 TO I.  MOVE 1 TO J.
00295   011190      PERFORM INTB THRU INX.   MOVE 1 TO TSW1.
00296   011200      GO TO DEX.
00297   011210 DG200.
00298   011220      MOVE 0 TO I.  MOVE 3 TO J.
00299   011230      PERFORM INTB THRU INX.
00300   011240      MOVE 1 TO TSW3.
00301   011250      GO TO DEX.
00302   012010 OG400.
00303   012020      DISPLAY '200<RTT2<400'
00304   012030      GO TO DEX.
00305   012040 OG500.
00306   012050      DISPLAY 'READOUT TOO LARGE'.
00307   012060 DEX.  EXIT.
00308   013010 TAKOUT.
00309   013020      MOVE 0 TO K.
00310   013030      MOVE 1 TO J.
00311   013040      IF TSW1 = 1  PERFORM WHDS
00312   013050          PERFORM WTAB VARYING I FROM 1 BY 1 UNTIL I > 100.
00313   013060      IF TSW2 NOT = 1 GO TO CKSW3.
00314   013070      IF TSW1 NOT = 1 GO TO CKSW3.
00315   013080      IF TSW3 NOT = 1 GO TO CKSW4.
00316   013090      MOVE 2 TO J.
00317   013100      PERFORM WHDS.
00318   013110      PERFORM WTAB VARYING I FROM 1 BY 1 UNTIL I > 100.
00319   013120 CKSW3.
00320   013130      MOVE 3 TO J
00321   013140      IF TSW3 = 1 PERFORM WHDS
00322   013150          PERFORM WTAB VARYING I FROM 1 BY 1 UNTIL I > 100.
00323   013160 CKSW4.
00324   013170      MOVE 4 TO J
00325   013180      IF TSW4 = 1 PERFORM WHDS
00326   013190          PERFORM WTAB VARYING I FROM 1 BY 1 UNTIL I > 100.
00327   013200 TEX.
00328   013210      EXIT.
00329   013220 WTAB.
00330   013230      ADD 1 TO K.
00331   013240      MOVE K TO DGSS.
00332   014050      IF PEJECT = 25  PERFORM WHDS.
00333 **013250      MOVE TA (J, I) TO OGAM.
00334   014010      MOVE TP (J, I) TO OGPAR.
00335   014020      MOVE TI (J, I) TO OGIT.
00336   014030      WRITE LIT FROM OGLIST AFTER 2.
00337   014040      ADD 1 TO PEJECT
00338   014060 WHDS.
00339   014070      WRITE LIT FROM DHEAD1 AFTER 0.
```

```
00340   014080    WRITE LIT FROM DHEAD2 AFTER 2.
00341   014090    WRITE LIT FROM DHEAD3 AFTER 1.
00342   014100    MOVE 0 TO PEJECT.
```

1

```
00001   00101   IDENTIFICATION DIVISION.                                    CM000085
00002   00102   PROGRAM-ID. 'CM000085'.                                     CM000085
00003   00103   AUTHOR. RDSE.                                               CM000085
00004   001031  DATE-WRITTEN. FEB, 1968.
00005   001032  DATE-COMPILED. JAN 23,1970
00006   00104   ENVIRONMENT DIVISION.                                       CM000085
00007   00105   CONFIGURATION SECTION.                                      CM000085
00008   00106   SOURCE-COMPUTER. IBM-360.                                   CM000085
00009   00107   OBJECT-COMPUTER. IBM-360.                                   CM000085
00010   00108   INPUT-OUTPUT SECTION.                                       CM000085
00011   00109   FILE-CONTROL.                                               CM000085
00012   00112       SELECT I-FILE ASSIGN  'I001'  UTILITY.                  CM000085
00013   00113       SELECT A-FILE ASSIGN  'A001'  UTILITY.                  CM000085
00014   00114       SELECT B-FILE ASSIGN  'B001'  UTILITY.                  CM000085
00015   00115       SELECT C-FILE ASSIGN  'C001'  UTILITY.                  CM000085
00016   00116       SELECT A-WORK ASSIGN  'AW01'  UTILITY.                  CM000085
00017   00117       SELECT B-WORK ASSIGN  'BW01'  UTILITY.                  CM000085
00018   00118       SELECT C-WORK ASSIGN  'CW01'  UTILITY.                  CM000085
00019   00119       SELECT HOOKUP ASSIGN  'H001'  UTILITY.                  CM000085
00020   00120       SELECT PATCH  ASSIGN  'P001'  UTILITY.                  CM000085
00021   00121       SELECT W-HOOK ASSIGN  'WH01'  UTILITY.                  CM000085
00022   00122       SELECT W-PATH ASSIGN  'WP01'  UTILITY.                  CM000085
00023   00124       SELECT HK-OUT ASSIGN  'OH01'  UTILITY.                  CM000085
00024   00125       SELECT PT-OUT ASSIGN  'OP01'  UTILITY.                  CM000085
00025   00126   DATA DIVISION.                                              CM000085
00026   00127   FILE SECTION.                                               CM000085
00027   00201   FD  I-FILE  RECORDING F  BLOCK 1 RECORDS  RECORD 80  LABEL  CM000085
00028   00202        RECORDS OMITTED  DATA RECORDS I-CARD A-CARD B-CARD C-CARD  CM000085
00029   002021      O-CARD.                                                 CM000085
00030   00203   01  O-CARD.                                                 CM000085
00031   00204       02  OPTN     PICTURE  X(7).                             CM000085
00032   00206       02  FILLER   PICTURE  X(73).                            CM000085
00033   00213   01  I-CARD.                                                 CM000085
00034   00214       02  DELPARM PICTURE X(9).                               CM000085
00035   00215       02  FILLER   PICTURE X(71).                             CM000085
00036   00301   01  A-CARD.                                                 CM000085
00037   00302       02  A10      PICTURE  XXXX.
00038   00303       02  A20      PICTURE  9.                                CM000085
00039   00304       02  FILLER   PICTURE  X(75).
00040   00305   01  B-CARD.                                                 CM000085
00041   00306       02  B10      PICTURE  XXXX.                             CM000085
00042   00307       02  B20      PICTURE  9.                                CM000085
00043   00308       02  B30      PICTURE  X(65).                            CM000085
00044   00309       02  B100     PICTURE  X(9).                             CM000085
00045   00310       02  B110     PICTURE  X.                                CM000085
00046   00312   01  C-CARD.                                                 CM000085
00047   00313       02  C10      PICTURE  X(41).                            CM000085
00048   00314       02  C40      PICTURE  X(6).                             CM000085
00049   00315       02  C50      PICTURE  X(33).                            CM000085
00050   00401   FD  A-FILE       RECORDING F  BLOCK 45 RECORDS  RECORD 80
00051   00402            LABEL RECORDS STANDARD  DATA RECORD AIN.           CM000085
00052   00403   01  AIN.                                                    CM000085
00053   00404       02  A1       PICTURE  XXXX.
00054   00405       02  A2       PICTURE  9.                                CM000085
```

2

```
00055   00406      02  A3      PICTURE  X(75).
00056   00408  FD  B-FILE       RECORDING F  BLOCK 45 RECORDS  RECORD 80
00057   00409              LABEL RECORDS STANDARD   DATA RECORD BIN.          CM000085
00058   00410  01  BIN.                                                        CM000085
00059   00411      02  B1      PICTURE  XXXX.                                  CM000085
00060   00412      02  B2      PICTURE  9.                                     CM000085
00061   00413      02  B3      PICTURE  X(65).                                 CM000085
00062   00414      02  B10     PICTURE  X(9).                                  CM000085
00063   00415      02  B11     PICTURE  X.                                     CM000085
00064   00417  FD  C-FILE       RECORDING F  BLOCK 45 RECORDS  RECORD 80
00065   00418              LABEL RECORDS STANDARD   DATA RECORD CIN.          CM000085
00066   00419  01  CIN.                                                        CM000085
00067   00420      02  C1      PICTURE  X(23).                                 CM000085
00068   00421      02  C2      PICTURE  X(9).                                  CM000085
00069   00422      02  C3      PICTURE  X(9).                                  CM000085
00070   00423      02  C4      PICTURE  X(6).                                  CM000085
00071   00424      02  C5      PICTURE  X(33).                                 CM000085
00072   00501  FD  HOOKUP  RECORDING F  BLOCK 1  RECORDS  RECORD 133           CM000085
00073   00502          LABEL RECORDS STANDARD  DATA RECORD HOK.                CM000085
00074   00503  01  HOK.                                                        CM000085
00075   00504      02  H1      PICTURE X.                                      CM000085
00076   00505      02  H2      PICTURE X(9).                                   CM000085
00077   00506      02  H3      PICTURE X(113).
00078   00507      02  H4      PICTURE XXXX.                                   CM000085
00079   00508      02  H5      PICTURE X(6).                                   CM000085
00080   00510  FD  PATCH   RECORDING F  BLOCK 1  RECORDS  RECORD 133           CM000085
00081   00511          LABEL RECORDS STANDARD  DATA RECORD PAT.                CM000085
00082   00512  01  PAT.                                                        CM000085
00083   00513      02  P1      PICTURE X.                                      CM000085
00084   00514      02  P2      PICTURE XXXX.                                   CM000085
00085   00515      02  P3      PICTURE X(72).                                  CM000085
00086   00516      02  P4      PICTURE XXXX.                                   CM000085
00087   00517      02  P5      PICTURE X(52).                                  CM000085
00088   00601  FD  W-HOOK  RECORDING F  BLOCK 1  RECORDS  RECORD 133           CM000085
00089   00602              LABEL RECORDS STANDARD   DATA RECORD WHOK.          CM000085
00090   00603  01  WHOK.                                                       CM000085
00091   00604      02  WH1     PICTURE X.                                      CM000085
00092   00605      02  WH2     PICTURE X(9).                                   CM000085
00093   00606      02  WH3     PICTURE X(113).                                 CM000085
00094   00607      02  WH4     PICTURE XXXX.                                   CM000085
00095   00608      02  WH5     PICTURE X(6).                                   CM000085
00096   00610  FD  W-PATH  RECORDING F  BLOCK 1  RECORDS  RECORD 133           CM000085
00097   00611              LABEL RECORDS STANDARD   DATA RECORD WPAT.          CM000085
00098   00612  01  WPAT.                                                       CM000085
00099   00613      02  WP1     PICTURE X.                                      CM000085
00100   00614      02  WP2     PICTURE XXXX.                                   CM000085
00101   00615      02  WP3     PICTURE X(72).                                  CM000085
00102   00616      02  WP4     PICTURE XXXX.                                   CM000085
00103   00617      02  WP5     PICTURE  X(48).
00104   00618      02  WP6     PICTURE  XXXX.
00105   00701  FD  HK-OUT      RECORDING F  BLOCK 1  RECORDS  RECORD 133       CM000085
00106   00702              LABEL RECORDS STANDARD   DATA RECORD OHOK.          CM000085
00107   00703  01  OHOK.                                                       CM000085
00108   00704      02  OH1     PICTURE X.                                      CM000085
00109   00705      02  OH2     PICTURE X(9).                                   CM000085
00110   00706      02  OH3     PICTURE X(113).                                 CM000085
00111   00707      02  OH4     PICTURE XXXX.                                   CM000085
```

3

```
00708      02  OH5      PICTURE X(6).                                    CM000085
00710  FD  PT-OUT       RECORDING F  BLOCK 1  RECORDS   RECORD 133       CM000085
00711              LABEL RECORDS STANDARD  DATA RECORD OPAT.             CM000085
00712  01  OPAT.                                                         CM000085
00713      02  OP1      PICTURE  X.                                      CM000085
00714      02  OP2      PICTURE  XXXX.                                   CM000085
00715      02  OP3      PICTURE  X(72).                                  CM000085
00716      02  OP4      PICTURE  XXXX.                                   CM000085
00717      02  OP5      PICTURE  X(52).                                  CM000085
00801  FD  A-WORK       RECORDING F  BLOCK 45 RECORDS   RECORD 80
00802              LABEL RECORDS STANDARD  DATA RECORD AWRK.             CM000085
00803  01  AWRK.                                                         CM000085
00804      02  A1W      PICTURE XXXX.
00805      02  A2W      PICTURE 9.                                       CM000085
00806      02  FILLER   PICTURE X(75).
00808  FD  B-WORK       RECORDING F  BLOCK 45 RECORDS   RECORD 80
00809                   LABEL RECORDS STANDARD  DATA RECORD BWRK.         CM000085
00810  01  BWRK.                                                         CM000085
00811      02  B1W      PICTURE  XXXX.                                   CM000085
00812      02  B2W      PICTURE  9.                                      CM000085
00813      02  B3W      PICTURE  X(65).                                  CM000085
00814      02  B10W     PICTURE  X(9).                                   CM000085
00815      02  B11W     PICTURE  X.                                      CM000085
00817  FD  C-WORK       RECORDING F  BLOCK 45 RECORDS  RECORD 80          CM00008
00818                   LABEL RECORDS STANDARD  DATA RECORD CWRK.         CM000085
00819  01  CWRK.                                                         CM000085
00820      02  C1W      PICTURE  X(23).                                  CM000085
00821      02  C2W      PICTURE  X(9).                                   CM000085
00822      02  C3W      PICTURE  X(9).                                   CM000085
00823      02  C4W      PICTURE  X(6).                                   CM000085
00824      02  C5W      PICTURE  X(33).
01001  WORKING-STORAGE SECTION.                                          CM000085
01002  77  AA-SW    PICTURE 9   VALUE 0.                                 CM000085
01003  77  A-SW     PICTURE 9   VALUE 0.                                 CM000085
01004  77  A-CNT    PICTURE XXXX VALUE SPACE.
01005  77  END-SW   PICTURE 9   VALUE 0.                                 CM000085
01006  77  AB-SW    PICTURE 9   VALUE 0.                                 CM000085
01007  77  B-CNT    PICTURE XXXX  VALUE SPACE.                           CM000085
01008  77  AC-SW    PICTURE 9   VALUE 0.                                 CM000085
01009  77  C-CNT    PICTURE X(6)  VALUE SPACE.                           CM000085
01501  PROCEDURE DIVISION.                                               CM000085
01502      OPEN INPUT HOOKUP PATCH.                                      CM000085
01503      OPEN OUTPUT W-HOOK W-PATH.                                    CM000085
01504  DISK-HK.                                                          CM000085
01505      READ HOOKUP AT END GO TO DISKH.                               CM000085
01506      WRITE WHOK  FROM HOK.                                         CM000085
01507      GO TO DISK-HK.                                                CM000085
01508  DISKH.                                                            CM000085
01509      CLOSE HOOKUP W-HOOK.                                          CM000085
01510  DISK-PT.                                                          CM000085
01511      READ PATCH AT END GO TO DISKP.                                CM000085
01512      WRITE WPAT FROM PAT.                                          CM000085
01513      GO TO DISK-PT.                                                CM000085
01514  DISKP.                                                            CM000085
01515      CLOSE PATCH W-PATH.                                           CM000085
01516      OPEN I-O A-FILE B-FILE C-FILE.                                CM000085
01517      OPEN INPUT I-FILE.                                            CM000085
```

```
00169   01519        READ I-FILE AT END GO TO IA1NO.                          CM000085
00170   01520        IF OPTN = 'DELETEA'  GO TO DELETE-A.                     CM000085
00171   01521        IF OPTN = 'ADDA   '  GO TO ADD-A.                        CM000085
00172   01522        IF OPTN = 'DELETEB'  GO TO DELETE-B.                     CM000085
00173   01523        IF OPTN = 'ADDB   '  GO TO ADD-B.                        CM000085
00174   01524        IF OPTN = 'DELETEC'  GO TO DELETE-C.                     CM000085
00175   01525        IF OPTN = 'ADDC   '  GO TO ADD-C.                        CM000085
00176   01601        IF OPTN = 'DELETEP' GO TO DELETE-P.                      CM000085
00177   01602    IA1NO.                                                       CM000085
00178   01603        DISPLAY 'NO HEADER CARDS'.                               CM000085
00179   01604        STOP RUN.                                                CM000085
00180   01605    DELETE-A.                                                    CM000085
00181   01606        READ I-FILE AT END GO TO IA1NO.                          CM000085
00182   01607        IF OPTN = 'ADDA   ' CLOSE A-FILE  OPEN I-O A-FILE        CM000085
00183   01608         GO TO ADD-A.                                            CM000085
00184   01609        IF OPTN = 'DELETEB' GO TO DELETE-B.                      CM000085
00185   01610        IF OPTN = 'ADDB   ' GO TO ADD-B.                         CM000085
00186   01611        IF OPTN = 'DELETEC' GO TO DELETE-C.                      CM000085
00187   01612        IF OPTN = 'ADDC   ' GO TO ADD-C.                         CM000085
00188   01613        IF OPTN = 'DELETEP' GO TO DELETE-P.                      CM000085
00189   01614    DA-READ.                                                     CM000085
00190   01615        READ A-FILE AT END GO TO AD-END.                         CM000085
00191   01616        IF A1 NOT = A10 GO TO DA-READ.                           CM000085
00192   01617    DAR1.
00193   01618        MOVE 'XXXX' TO A1.
00194   01619        REWRITE AIN.                                             CM000085
00195   016191       READ A-FILE AT END CLOSE A-FILE OPEN I-O A-FILE
00196   016192        GO TO DELETE-A.
00197   016193       IF A1 = A10 GO TO DAR1.
00198   01620        GO TO DELETE-A.                                          CM000085
00199   01621    AD-END.                                                      CM000085
00200   01622        DISPLAY 'NOT IN A-FILE ' A10 A20.                        CM000085
00201   01623        GO TO DELETE-A.                                          CM000085
00202   01701    ADD-A.                                                       CM000085
00203   01702        MOVE 1 TO AA-SW.                                         CM000085
00204   01703        OPEN OUTPUT A-WORK.                                      CM000085
00205   017031   AD-A1.
00206   01704        READ A-FILE AT END GO TO AA-READ.                        CM000085
00207   017041       IF A1 = 'XXXX' GO TO AD-A1.
00208   01705    AA-READ.                                                     CM000085
00209   01706        READ I-FILE AT END GO TO IA1NO.                          CM000085
00210   01707        IF OPTN = 'DELETEB'  PERFORM FINIS-A THRU AX GO TO DELETE-B. CM000085
00211   01708        IF OPTN = 'ADDB   '  PERFORM FINIS-A THRU AX GO TO ADD-B.  CM000085
00212   01709        IF OPTN = 'DELETEC'  PERFORM FINIS-A THRU AX GO TO DELETE-C. CM000085
00213   01710        IF OPTN = 'ADDC   '  PERFORM FINIS-A THRU AX GO TO ADD-C.  CM000085
00214   01711        IF OPTN = 'DELETEP'  PERFORM FINIS-A THRU AX GO TO DELETE-P. CM000085
00215   01712    AA-A.                                                        CM000085
00216   01713        GO TO AA-C.                                              CM000085
00217   01714    AA-C.                                                        CM000085
00218   01715        IF A1 < A10 GO TO AA-1.                                  CM000085
00219   01716        IF A1 = A10  MOVE 1 TO A-SW.                             CM000085
00220   01717    AA-B.                                                        CM000085
00221   01718        WRITE AWRK FROM A-CARD.                                  CM000085
00222   01719        GO TO AA-READ.                                           CM000085
00223   01720    AA-1.                                                        CM000085
00224   01721        IF A-SW = 1  MOVE 0 TO A-SW  MOVE A1 TO A-CNT            CM000085
00225   01722         GO TO AL-READ.                                          CM000085
```

5

```
00226   01723       WRITE AWRK FROM AIN.                                CM000085
00227   017231 AA-2.
00228   01724       READ A-FILE AT END GO TO AI-END.                    CM000085
00229   017241      IF A1 = 'XXXX' GO TO AA-2.
00230   01725       GO TO AA-A.                                         CM000085
00231   01801  AL-READ.                                                 CM000085
00232   01802       READ A-FILE AT END GO TO AI-END.                    CM000085
00233   018021      IF A1 = 'XXXX' GO TO AL-READ.
00234   01803       IF A1 = A-CNT  GO TO AL-READ.                       CM000085
00235   01804       GO TO AA-A.                                         CM000085
00236   01805  AI-END.                                                  CM000085
00237   01806       MOVE 1 TO END-SW.                                   CM000085
00238   01807       ALTER AA-A TO PROCEED TO AA-B.                      CM000085
00239   01808       GO TO AA-B.                                         CM000085
00240   01809  FINIS-A.                                                 CM000085
00241   018091      MOVE 0 TO A-SW.
00242   01810       IF END-SW = 1 MOVE 0 TO END-SW GO TO AX.            CM000085
00243   018101      IF A1 > A10 GO TO AF-WRT.
00244   01811  AF-READ.                                                 CM000085
00245   01812       READ A-FILE AT END GO TO AX.                        CM000085
00246   018121      IF A1 = 'XXXX' GO TO AF-READ.
00247   018122 AF-WRT.
00248   01813       WRITE AWRK FROM AIN.                                CM000085
00249   01814       GO TO AF-READ.                                      CM000085
00250   01815  AX.                                                      CM000085
00251   01816       EXIT.                                               CM000085
00252   01901  DELETE-B.                                                CM000085
00253   01902       READ I-FILE AT END GO TO IAIND.                     CM000085
00254   01903       IF OPTN = 'ADDB    '  CLOSE B-FILE OPEN I-O B-FILE  CM000085
00255   01904         GO TO ADD-B.                                      CM000085
00256   01905       IF OPTN = 'DELETEC'  GO TO DELETE-C.                CM000085
00257   01906       IF OPTN = 'ADDC    '  GO TO ADD-C.                   CM000085
00258   01907       IF OPTN = 'DELETEP'  GO TO DELETE-P.                CM000085
00259   01908  DB-READ.                                                 CM000085
00260   01909       READ B-FILE AT END GO TO DB-END.                    CM000085
00261   01910       IF B1 NOT = B10 GO TO DB-READ.                      CM000085
00262   01911       IF B2 NOT = B20 GO TO DB-READ.                      CM000085
00263   019111 DBR1.
00264   01912       MOVE 'XXXX' TO B1.                                  CM000085
00265   01913       REWRITE BIN.                                        CM000085
00266   019131      READ B-FILE AT END CLOSE B-FILE OPEN I-O B-FILE
00267   019132        GO TO DELETE-B.
00268   019133      IF B1 = B10 IF B2 = B20 GO TO DBR1.
00269   01914       GO TO DELETE-B.                                     CM000085
00270   01915  DB-END.                                                  CM000085
00271   01916       DISPLAY 'NOT IN B-FILE ' B10 B20.                   CM000085
00272   01917       GO TO DELETE-B.                                     CM000085
00273   02001  ADD-B.                                                   CM000085
00274   02002       MOVE 1 TO AB-SW.                                    CM000085
00275   02003       MOVE 0 TO A-SW.                                     CM000085
00276   02004       MOVE 0 TO END-SW.                                   CM000085
00277   02005       OPEN OUTPUT B-WORK.                                 CM000085
00278   020051 AD-B1.
00279   02006       READ B-FILE AT END GO TO ABB-READ.                  CM000085
00280   020061      IF B1 = 'XXXX' GO TO AD-B1.
00281   02007  ABB-READ.                                                CM000085
00282   02008       READ I-FILE AT END GO TO IAIND.                     CM000085
```

6

```
00283   02009       IF OPTN = 'DELETEC'  PERFORM FINIS-B THRU BX GO TO DELETE-C. CM0000B5
00284   02010       IF OPTN = 'ADOC    '  PERFORM FINIS-B THRU BX GO TO AOO-C.   CM0000B5
00285   02011       IF OPTN = 'DELETEP'  PERFORM FINIS-B THRU BX GO TO DELETE-P. CM0000B5
00286   02012   AB-ABO.                                                          CM0000B5
00287   02013       GO TO AB-AB1.                                                CM0000B5
00288   02014   AB-AB1.                                                          CM0000B5
00289   02015       IF B1 < B10  GO TO AB-LO.                                    CM0000B5
00290   02016       IF B1 = B10  MOVE 1 TO A-SW.                                 CM0000B5
00291   02017   AB-AB2.                                                          CM0000B5
00292   02018       WRITE BWRK  FROM B-CARD.                                     CM0000B5
00293   02019       GO TO ABB-READ.                                              CM0000B5
00294   02020   AB-LO.                                                           CM0000B5
00295   02021       IF A-SW = 1  MOVE 0 TO A-SW MOVE B1 TO B-CNT                 CM0000B5
00296   02022         GO TO RD-ABLO.                                             CM0000B5
00297   02023       WRITE BWRK FROM BIN.                                         CM0000B5
00298   020231  AB-LO1.
00299   02024       READ B-FILE AT END GO TO B-END.                              CM0000B5
00300   020241      IF B1 = 'XXXX' GO TO AB-LO1.
00301   02025       GO TO AB-ABO.                                                CM0000B5
00302   02101   RO-ABLO.                                                         CM0000B5
00303   02102       READ B-FILE AT END GO TO B-END.                              CM0000B5
00304   021021      IF B1 = 'XXXX' GO TO RD-ABLO.
00305   02103       IF B1 = B-CNT GO TO RO-ABLO.                                 CM0000B5
00306   02104       GO TO AB-ABO.                                                CM0000B5
00307   02105   B-END.                                                           CM0000B5
00308   02106       MOVE 1 TO END-SW.                                            CM0000B5
00309   02107       ALTER AB-ABO TO PROCEED TO  AB-AB2.                          CM0000B5
00310   02108       GO TO AB-AB2.                                                CM0000B5
00311   02109   FINIS-B.                                                         CM0000B5
00312   02110       IF END-SW = 1 GO TO BX.                                      CM0000B5
00313   021101      IF B1 > B10 GO TO FB-WRT.
00314   02111   FB-RO.                                                          CM0000B5
00315   02112       READ B-FILE AT END GO TO BX.                                 CM0000B5
00316   021121      IF B1 = 'XXXX' GO TO FB-RD.
00317   021122  FB-WRT.
00318   02113       WRITE BWRK FROM BIN.                                         CM0000B5
00319   02114       GO TO FB-RO.                                                 CM0000B5
00320   02115   BX.                                                              CM0000B5
00321   02116       EXIT.                                                        CM0000B5
00322   02201   DELETE-C.                                                        CM0000B5
00323   02202       READ I-FILE AT END GO TO IA1NO.                              CM0000B5
00324   02203       IF OPTN = 'ADOC    '  CLOSE C-FILE   OPEN I-O C-FILE        CM0000B5
00325   02204         GO TO AOO-C.                                               CM0000B5
00326   02205       IF OPTN = 'DELETEP'  GO TO DELETE-P.                         CM0000B5
00327   02206   DC-READ.                                                         CM0000B5
00328   02207       READ C-FILE AT END GO TO CO-END.                             CM0000B5
00329   02208       IF C4 NOT = C40 GO TO DC-READ.                               CM0000B5
00330   02209       MOVE 'XXXXXX' TO C4.                                         CM0000B5
00331   02210       REWRITE CIN.
00332   02211       GO TO DELETE-C.                                              CM0000B5
00333   02212   CO-END.                                                          CM0000B5
00334   02213       DISPLAY 'NOT IN C-FILE ' C40.
00335   02214       GO TO DELETE-C.                                              CM0000B5
00336   02301   ADD-C.                                                           CM0000B5
00337   02302       MOVE 1 TO AC-SW.                                             CM0000B5
00338   02303       MOVE 0 TO END-SW A-SW.                                       CM0000B5
00339   02304       OPEN OUTPUT C-WORK.                                          CM0000B5
```

7

```
00340   023041 AO-C1.
00341   02305      READ C-FILE AT END GO TO ACC-READ.                    CM000085
00342   023051     IF C4 = 'XXXXXX' GO TO AO-C1.
00343   02306  ACC-READ.                                                 CM000085
00344   02307      READ I-FILE AT END GO TO IA1NO.                       CM000085
00345   02308      IF OPTN = 'DELETEP'  PERFORM  FINIS-C THRU CX         CM000085
00346   02309        GO TO DELETE-P.                                     CM000085
00347   02310  AC-ACCO.                                                  CM000085
00348   02311      GO TO AC-ACC2.                                        CM000085
00349   02312  AC-ACC2.                                                  CM000085
00350   02313      IF C4 < C40 GO TO AC-LO.                              CM000085
00351   02314      IF C4 = C40 MOVE 1 TO A-SW.                           CM000085
00352   02315  AC-ACC1.                                                  CM000085
00353   02316      WRITE CWRK FROM C-CARD.                               CM000085
00354   02317      GO TO ACC-READ.                                       CM000085
00355   02318  AC-LO.                                                    CM000085
00356   02319      IF A-SW = 1  MOVE 0 TO A-SW  MOVE C4 TO C-CNT         CM000085
00357   02320      GO TO LO-ACRO.                                        CM000085
00358   02321      WRITE CWRK FROM  CIN.                                 CM000085
00359   023211 AC-LO1.
00360   02322      READ C-FILE AT END GO TO AC-END.                      CM000085
00361   023221     IF C4 = 'XXXXXX' GO TO AC-LOI.
00362   02323      GO TO AC-ACCO.                                        CM000085
00363   02401  AC-END.                                                   CM000085
00364   02402      ALTER AC-ACCO TO PROCEED TO AC-ACC1.                  CM000085
00365   02403      MOVE 1 TO END-SW.                                     CM000085
00366   02404      GO TO AC-ACC1.                                        CM000085
00367   02405  LO-ACRO.                                                  CM000085
00368   02406      READ C-FILE AT END GO TO AC-END.                      CM000085
00369   024061     IF C4 = 'XXXXXX' GO TO LO-ACRO.
00370   02407      IF C4 = C-CNT GO TO LO-ACRO.                          CM000085
00371   02408      GO TO AC-ACCO.                                        CM000085
00372   02409  FINIS-C.                                                  CM000085
00373   02410      IF END-SW = 1 MOVE 0 TO END-SW GO TO CX.              CM000085
00374   024101     IF C4 > C40 GO TO FC-WRT.
00375   02411  FC-RO.                                                    CM000085
00376   02412      READ C-FILE AT END GO TO CX.                          CM000085
00377   024121     IF C4 = 'XXXXXX' GO TO FC-RO.
00378   024122 FC-WRT.
00379   02413      WRITE CWRK FROM CIN.                                  CM000085
00380   02414      GO TO FC-RO.                                          CM000085
00381   02415  CX.                                                       CM000085
00382   02416      EXIT.                                                 CM000085
00383   02501  DELETE-P.                                                 CM000085
00384   02502      IF AA-SW = 1 CLOSE A-WORK GO TO OP-8A.
00385   02503      OPEN OUTPUT A-WORK.                                   CM000085
00386   02504      CLOSE A-FILE  OPEN I-O A-FILE.                        CM000085
00387   02505  OP-ARD.                                                   CM000085
00388   02506      READ A-FILE AT END GO TO AP-END.                      CM000085
00389   02507      IF A1 = 'XXXX' GO TO OP-ARD.
00390   02508      WRITE AWRK FROM AIN.                                  CM000085
00391   02509      GO TO OP-ARD.                                         CM000085
00392   02510  AP-END.                                                   CM000085
00393   02511      CLOSE A-WORK.                                         CM000085
00394   02512  OP-BA.                                                    CM000085
00395   02513      IF AB-SW = 1 CLOSE B-WORK GO TO OP-CA.
00396   02514      OPEN OUTPUT B-WORK.                                   CM000085
```

9

```
00397   02515       CLOSE B-FILE  OPEN I-O B-FILE.                          CM000085
00398   02516   OP-BRO.                                                     CM000085
00399   02517       READ B-FILE AT END GO TO BP-END.                         CM000085
00400   02518       IF B1 = 'XXXX' GO TO OP-BRO.                             CM000085
00401   02519       WRITE BWRK FROM BIN.                                     CM000085
00402   02520       GO TO OP-BRO.                                            CM000085
00403   02521   BP-END.                                                     CM000085
00404   02522       CLOSE B-WORK.                                            CM000085
00405   02523   OP-CA.                                                      CM000085
00406   02524       IF AC-SW = 1  CLOSE C-WORK  GO TO OPLO.
00407   02525       OPEN OUTPUT C-WORK.                                      CM000085
00408   02601       CLOSE C-FILE  OPEN I-O C-FILE.                           CM000085
00409   02602   OP-CRO.                                                     CM000085
00410   02603       READ C-FILE AT END GO TO CP-END.                         CM000085
00411   02604       IF C4 = 'XXXXXX' GO TO OP-CRO.                           CM000085
00412   02605       WRITE CWRK FROM CIN.
00413   02606       GO TO OP-CRO.                                            CM000085
00414   02607   CP-END.                                                     CM000085
00415   02608       CLOSE C-WORK.                                            CM000085
00416   02609   OPLO.                                                       CM000085
00417   02610       OPEN I-O W-HOOK.                                         CM000085
00418   02612       READ W-HOOK AT END GO TO WH-END.                         CM000085
00419   02613   OPI-RO.                                                     CM000085
00420   02614       READ I-FILE AT END GO TO IF-END.                         CM000085
00421   02615       OPEN I-O C-WORK.                                         CM000085
00422   02616   OPC-RO.                                                     CM000085
00423   02617       READ C-WORK AT END GO TO OP-CWX.                         CM000085
00424   02618       IF DELPARM NOT = C2W GO TO OPC-RO.                       CM000085
00425   02619       MOVE SPACE TO C2W.                                       CM000085
00426   02620       REWRITE CWRK.                                            CM000085
00427   02621       GO TO OPC-RO.                                            CM000085
00428   02622   OP-CWX.                                                     CM000085
00429   02623       CLOSE C-WORK.                                            CM000085
00430   02624       OPEN I-O B-WORK.                                         CM000085
00431   02701   OPB-RO.                                                     CM000085
00432   02702       READ B-WORK AT END GO TO OP-BWX.
00433   02703       IF DELPARM NOT = B10W GO TO OPB-RO.                      CM000085
00434   02704       MOVE SPACE TO B10W.                                      CM000085
00435   02705       REWRITE BWRK.
00436   02706       GO TO OPB-RO.                                            CM000085
00437   02707   OP-BWX.                                                     CM000085
00438   02708       CLOSE B-WORK.                                            CM000085
00439   02709   OP. IF DELPARM NOT = WH2  GO TO OP-OPH.                     CM000085
00440   02710       MOVE 'XXXXXXXXX' TO WH2.                                 CM000085
00441   02711       OPEN I-O W-PATH.                                         CM000085
00442   02712   OP-PTRO.                                                    CM000085
00443   02713       READ W-PATH AT END GO TO WP-END.                         CM000085
00444   02714       IF WP6 = WH4  GO TO ITEM-EQ.
00445   02716       GO TO OP-PTRO.                                           CM000085
00446   02717   ITEM-EQ.                                                    CM000085
00447   02718       MOVE 'XXXX' TO WP2.                                      CM000085
00448   02719       REWRITE WPAT.                                            CM000085
00449   02720       GO TO OP-PTRO.                                           CM000085
00450   02721   OP-OPH.                                                     CM000085
00451   02722       READ W-HOOK AT END GO TO WH-END.                         CM000085
00452   02723       GO TO OP.                                                CM000085
00453   02724   WP-END.                                                     CM000085
```

9

```
02725      CLOSE W-PATH.                                                CM000085
02801      REWRITE WHOK.                                                CM000085
02802      GO TO OP-OPH.                                                CM000085
02803  WH-END.                                                          CM000085
02804      CLOSE W-HOOK.                                                CM000085
02805      OPEN I-O W-HOOK.                                             CM000085
02806      GO TO OPI-RO.                                                CM000085
02807  IF-END.                                                          CM000085
02808      CLOSE A-FILE 8-FILE C-FILE.                                  CM000085
02810      CLOSE I-FILE.                                                CM000085
02811      CLOSE W-HOOK.
02812      OPEN I-O W-HOOK  W-PATH.                                     CM000085
02813      OPEN OUTPUT HK-OUT PT-OUT.                                   CM000085
02814  IF-ROH.                                                          CM000085
02815      READ W-HOOK AT END GO TO ALL-HK.                             CM000085
02816      IF WH2 = 'XXXXXXXXX'  GO TO IF-RDH.                          CM000085
02817      WRITE OHOK FROM WHOK.                                        CM000085
02818      GO TO IF-ROH.                                                CM000085
02819  ALL-HK.                                                          CM000085
02820      CLOSE W-HOOK.                                                CM000085
02821      CLOSE HK-OUT.                                                CM000085
02822  IF-ROP.                                                          CM000085
02823      READ W-PATH AT END GO TO ALL-PT.                             CM000085
02824      IF WP2 = 'XXXX'  GO TO IF-RDP.                               CM000085
02825      WRITE OPAT FROM WPAT.                                        CM000085
02901      GO TO IF-ROP.                                                CM000085
02902  ALL-PT.                                                          CM000085
02903      CLOSE W-PATH                                                 CM000085
02904      CLOSE PT-OUT.                                                CM000085
02905      STOP RUN.                                                    CM000085
```

UNCLASSIFIED

Security Classification

DOCUMENT CONTROL DATA - R & D

(Security classification of title, body of abstract and indexing annotation must be entered when the overall report is classified)

1. ORIGINATING ACTIVITY *(Corporate author)* Arnold Engineering Development Center ARO, Inc., Operating Contractor Arnold Air Force Station, Tennessee	2a. REPORT SECURITY CLASSIFICATION UNCLASSIFIED 2b. GROUP N/A

3. REPORT TITLE

COMPUTER-AIDED DESIGN AND DOCUMENTATION OF INSTRUMENTATION SYSTEMS

4. DESCRIPTIVE NOTES *(Type of report and inclusive dates)*

Final Report

5. AUTHOR(S) *(First name, middle initial, last name)*

J. L. Dorris, ARO, Inc.

6. REPORT DATE July 1971	7a. TOTAL NO. OF PAGES 159	7b. NO. OF REFS 0

8a. CONTRACT OR GRANT NO. F40600-72-C-0003 b. PROJECT NO. c. d.	9a. ORIGINATOR'S REPORT NUMBER(S) AEDC-TR-71-109 9b. OTHER REPORT NO(S) *(Any other numbers that may be assigned this report)* ARO-ETF-TR-71-83

10. DISTRIBUTION STATEMENT

Approved for public release; distribution unlimited.

11. SUPPLEMENTARY NOTES Available in DDC	12. SPONSORING MILITARY ACTIVITY Arnold Engineering Development Center, Air Force Systems Command, Arnold Air Force Station, Tennessee

13. ABSTRACT

A system of digital computer programs developed to aid in the design and documentation of instrumentation systems is described. Included are brief descriptions of system concepts and capabilities, required system inputs, explanations of system outputs and information contained therein, and system utilization. This system is currently in use by the ETF J-Instrument Branch of the Arnold Engineering Development Center.

DD FORM 1 NOV 65 1473

UNCLASSIFIED

Security Classification

14. KEY WORDS	LINK A ROLE	LINK A WT	LINK B ROLE	LINK B WT	LINK C ROLE	LINK C WT
instruments						
design						
documentation						
computers						
computer systems programs						

AFSC
Arnold AFS Tenn