TRANSL. NO. 3570

DATE: July 68

DDC AVAILABILITY NOTICE

Qualified requestors may obtain copies of this document from DDC.

This publication has been translated from the open literature and is available to the general public. Non-DOD agencies may purchase this publication from the Clearinghouse for Federal Scientific and Technical Information, U. S. Department of Commerce, Springfield, Va.

DDC
SEP 26 1968
A

DEPARTMENT OF THE ARMY
Fort Detrick
Frederick, Maryland

Reproduced by the
CLEARINGHOUSE
for Federal Scientific & Technical
Information Springfield Va. 22151

This document has been approved for public release and sale; its distribution is unlimited

(45-)

2270

LABORATORY COMPLEX OF EQUIPMENT FOR SUSPENDED CELL CULTIVATION

/Following is the translation of an article by L. N. Mishin, Institute of Virology imeni D. I. Ivanovskogo, AMN USSR, Moscow, published in the Russian-language periodical Voprosy Virusologii, No 1, 1968, pp 115-120. It was submitted on 13 Feb 1967./

The task of obtaining large amounts of cellular biomass has recently taken on primary significance in connection with the intensive introduction of the tissue culture method into practice in a wide circle of biological investigations. The most effective method for the production of cell cultures is the method of suspended cultivation, which from a production point of view has a number of essential advantages in comparison with the widely used method of fixed monolayer cultivation.

The successful mastering of the method of suspended cultivation of cells depends on a number of factors among which an important role is played by the perfection of the technical guarantee of the method.

At the Institute of Virology imeni D. I. Ivanovskogo AMN USSR work was carried out on the development of a complex of equipment which is required for mastering of the suspended cultivation of cells in conformity with the conditions at an industrial cultivation laboratory.

An analysis of the significant methodical, technological, and equipment variants for solving the task of suspended cultivation makes it possible to divide them into two main types - continuous systems and noncontinuous. Only the so-called spinner methods of cultivation are being thought of here. The greatest practical interest from the point of view of productive capacity, simplicity of attendance, and economy belongs to continuous methods of cultivation using uninterrupted or fine-batch input of nutrient medium with the simultaneous takeoff of the same amount of suspension.

In recent years abroad a considerable number of various modifications of continuous systems have been suggested /1/. In the majority of cases these have no significant differences in the technology of the cultivation process and equipment design.

The main position is probably occupied by the cytogenerator which was proposed by Gruff and McCarty in 1957 /2/. This occupies an intermediate position between continuous and noncontinuous systems. In the cytogenerator the continuous renewal of nutrient medium is realized with the use of porous membranes without the corresponding continuous sampling of the cell suspension.

Continuous systems based on the principle of ensuring optimal conditions for the development of the culture may be broken down into two types: 1st - systems utilizing the principle of the "chemostat," proposed in 1950 by Monod /4/ and at the same time by Novick and Szillard /5/; 2nd - systems utilizing the principle of the "turbidostat," proposed by Myers and Clark /6/ in 1944. In systems of the 1st type the conditions for stabilization of the development of the culture are ensured by the use of nutrient media with a limited reserve of certain vitally important metabolites which restrains the multiplication of the cells. With the addition of fresh medium and the simultaneous runoff of suspension its concentration is reduced. This again improves the conditions for the development of the culture. In systems of the 2nd type the density of the cell suspension is used as the regulating factor. The continuous indication of the dynamics of changes in the density of the cell population makes it possible to realize the automatic regulation of the rate of supplying fresh nutrient medium with the simultaneous removal of the corresponding amount of suspension.

The principle of the "turbidostat" is the most promising for the production of large quantities of cell cultures. It ensures the maximum steady rate of multiplication with the minimum duration of a generation (based on the data of Telling et al. /6/ on an order of 14-15 hours) and a high stable density of cell population, reaching 2.5×10^6 cells/ml.

In taking up the problem of developing equipment for the suspended cultivation of cells the problem arises of selecting the most optimum variation for realization of the system. In conformity with the stipulations of the Institute of Virology imeni D. I. Ivanovskogo AMN USSR, and also of a number of other related institutes, it is possible to formulate the basic general requirements which should be imposed on the system: 1) universality of the system in the sense of the feasibility of using it not only for industrial purposes but also in experimental work by virologists, cytologists, and biochemists; 2) reliability in operation and simplicity of maintenance; 3) possibility of working with small volumes of suspensions; 4) comparatively low cost. Considering these conditions, and also the outlook for mastering the new method without preliminary experience, it is more preferable to construct a model of a system for suspended cultivation based on the noncontinuous type, which completely satifies the requirements which were set.

The basic scheme of the unit for suspended cultivation is shown in Figure 1.

The culture vessels (1) with floating vane magnetic mixers are set up on an industrially produced magnetic drive. The vessels are equipped with airtight lids with connecting pieces for the

influx and takeoff of the air mixture which is used for the aeration of the culture and a pipe for feeding fresh nutrient medium into the vessel. The number of revolutions of the rotating magnet and consequently the number of revolutions of the floating mixer are regulated by an autotransformer (7). The sterile recovery of cell suspension is carried out with the help of stopcocks which are located in the lower part of the vessels. Fresh nutrient medium is contained in vessel (5) and when necessary is fed to the culture vessels with the help of stopcocks (16). Tubes made of silicon rubber serve as connecting elements between vessel (5) and the culture vessels.

The aeration system contains a micropump (4), ensuring the pumping of the gaseous mixture through the culture vessels, a mixing tank (3), and a CO_2 analyzer unit (2). The required concentration of CO_2 in the gaseous mixture which is circulating through the aeration system is controlled by measuring devices and automatic equipment. If the CO_2 concentration deviates to one side or the other from the assigned value either air from a compressor (11) or CO_2 from a tank (12) is automatically fed in. The portion of the required component of the gaseous mixture is fed into the aeration system with the help of magnetic valves (8 and 9).

For establishing the required expenditure of CO_2 a microreducer (14) is used. It is connected underneath to the discharge outlet of an ordinary reducer for carbon dioxide with maximum pressure on the "low" side of 5 atm. The rate of CO_2 supply is controlled with the help of the rheometer (15). Air sterility is ensured with a sterilization filter (10). The inclusion of a similar filter in the line of supply of CO_2 turned out to be unnecessary, since here the conditions of sterility are ensured by the use of simple cotton filters (19).

The culture vessel is a glass cylinder with a flat bottom which is made from molybdenum glass. Welded to the lower part of the vessel is a fitting with a section containing the tap for recovery of cell suspension. A very important element of the culture vessel is the system for mixing the cell suspension.

We designed an original floating vane mixer[1] which is kept in rotation by a standard magnetic drive. It has no rubbing mechanical contacts in the liquid, does not require airtight transfer bearings, performs very effective mixing thanks to the vanes, and has a high degree of reliability during prolonged uninterrupted operation.

1./ L. N. Mishin and others, Inventor's certificate No 175039, dated 17 Apr 1965.

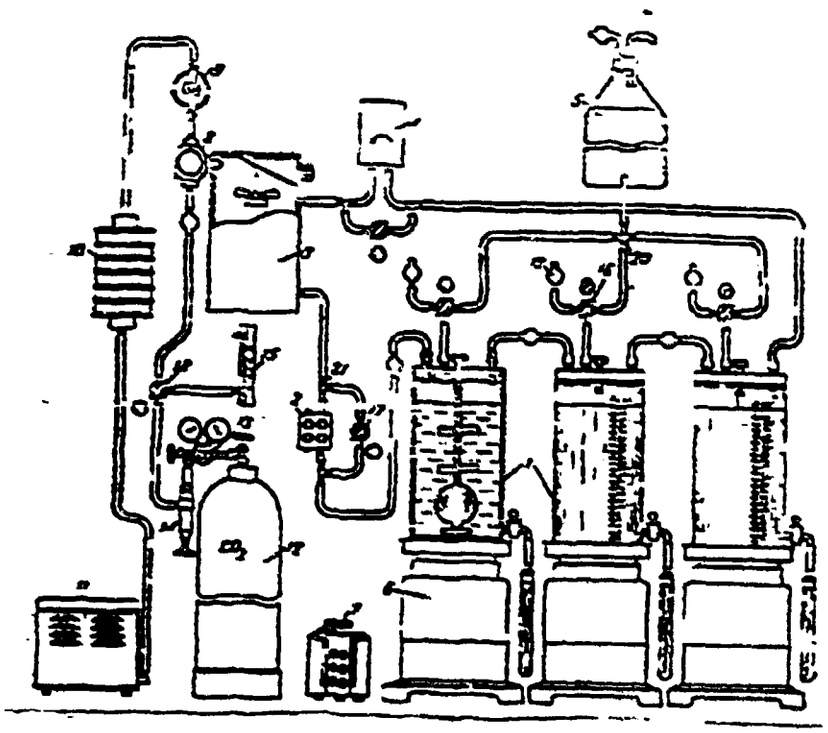

Fig. 1. Main flow sheet of a unit for suspended cultivation of cells. 1 - culture vessels; 2 - CO_2 analyzer unit; 3 - mixing tank; 4 - micropump; 5 - vessel with nutrient medium; 6 - drive for magnetic mixer; 7 - autotransformer for regulating the number of revolutions of the mixer; 8 - valve for supply of CO_2; 9 - valve for supply of air; 10 - air sterilization filter; 11 - air compressor; 12 - tank with carbon dioxide; 13 - pressure reducer; 14 - microvalve; 15 - rheometer; 16 - stopcock for feeding medium to culture vessels; 17 - stopcock for air bypass of analyzer unit; 18 - stopcock for switching the flow of CO_2 for measurement; 19 - air filter; 20 - cross connection; 21 - T-connection.
[Translator's note: The terminology used for Nos. 14 and 19 in the text and in the diagram do not conform.]

The schematic arrangement of the mixer and its location in the culture vessel are shown in Fig. 1. A ferromagnetic rod, connected by a magnetic field with the rotating magnetic drive, is inclosed in a glass tube which is welded to the lower part of the spherical float. Welded to the upper part of the float is a glass tube bearing the vanes. The tube ends in a Teflon-like bearing with a reverse cone, with which the mixer rests against the conical Teflon-like screw in the lid of the vessel.

The volume of the float and the weight of the mixer are calculated so that the carrying capacity is 10-15 g greater than the attractive force of the ferromagnetic rod to the magnetic drive. The working distance between the bottom of the vessel and the ferromagnetic rod is 3-5 mm.

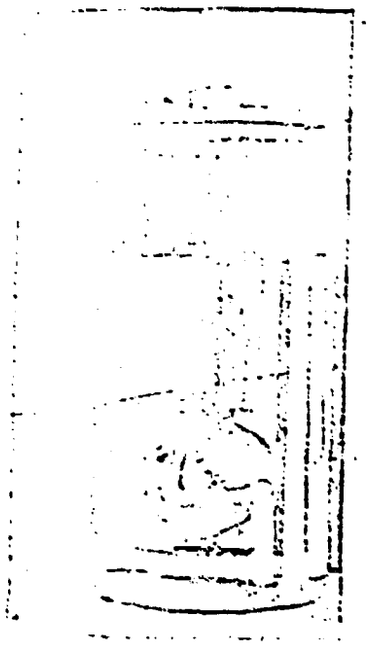

Fig. 2. Culture vessel with floating mixer, cover, and stopcock for runoff of cell suspension.

The minimum working volume of liquid is limited by the level at which the float is still completely submerged in the liquid. The turn of the blades should be such that during rotation the reaction of pressure of the liquid on the vanes is directed upwards in order to avoid the separation of the mixer from the bearing at a sufficiently high number of revolutions. The use of Teflon-like conical bearings ensures minimum fr[illegible]ion and a very high degree of [illegible]r-resistance.

During operation of the mixers for several thousand hours at rotation rates of 120-150 rpm no visible traces of wear were detected. The maximum number of revolutions at which the work of the mixer remains stable is 400-450 rpm.

Figure 2 shows the culture vessel in an assembled form. A closed type circulation system is used for aeration. It ensures the continuous and protracted flow of a mixture of air with carbon dioxide through the culture vessel over the surface of the liquid. Here the CO_2 plays the role of stabilizer and pH regulator for the medium. When using nutrient media which contain sodium bicarbonate a buffer system is formed which ensures the possibility of varying the pH by changes in the concentration of CO_2 in the gaseous phase. Other buffer systems can be used for stabilization of the pH, however apparently the system $CO_2 \rightleftarrows NaHCO_3$ is preferable since it not only ensures the possibility of the convenient regulation of pH but also establishes the continuous entry of CO_2, which is very important for the nourishment of cells /8/.

The use of a closed system is expedient from the point of view of economy in the expenditure of CO_2 and also the convenience of changing its concentration in the gaseous flow in comparison with systems which use prepared gaseous mixtures for aeration.

A gas analyzer has been developed for the continuous measurement of the percentage of CO_2 in the gaseous flow. As a sensitive element it has a bridge thermoconductometric pickup. The preliminary establishment of the required concentration of CO_2 is carried out with the help of a regulator equipped with a scale which is graduated in fractions of percent of CO_2 from 1 up to 10 for

each 0.2%. A relay system automatically reduces the concentration of CO_2 in the circulation system to the established value, after which subsequent deviations from the assigned value, both an increase and a decrease, are leveled with an accuracy of $\pm$ 0.1%.

The analyzer contains a time relay which after uniform intervals turns on the circuit controlling the relay executors. The intervals between two switching-ons and also the amount of time for supplying the required gaseous component can be varied within wide ranges. Figure 3 shows the basic circuit for the measuring unit of the analyzer.

The bridge pickup is connected with the input of the amplifier and with the stabilized power supply of the bridge by means of plug connector Gr1. The two groups of resistances R_{20}--R_{29} and R_{30}--R_{39} are calibrated shunts to one of the arms of the bridge with the help of which the required percentage of CO_2 is established. The resistances R_{40} and R_{41} serve for the initial establishment of zero balance for the bridge when there is no CO_2 in the air being analyzed.

The signal for bridge unbalance, corresponding to the difference between actual concentration of CO_2 and that required, is converted with the help of vibrapack P_1, is amplified by 3 stages of amplification, and through an isolation transformer reaches a phase-sensitive detector.

The load for the detector includes the winding of a polarized relay type RP-5, the contacts of which during operation close the power supply circuit of the relay executors in the automation equipment.

The operational voltage of the polarized relay is 1 V, which corresponds to the signal of bridge unbalance caused by a change in the concentration of CO_2 by 0.1%. Power supply for the pickup bridge is carried out from a stabilizer, assembled on semiconductor triodes P_2--P_6, the stabilization coefficient of which is no less than 5000.

The measuring device IP_1 indicates the degree of unbalance of the unit, and device IP_2 - the supply of current for the pickup. The measuring unit is connected with the automation unit and the power supply unit which is structurally united with it with the help of plug connector Gr2. The basic circuit for the automation and power supply unit is presented in Figure 4.

The periodic switching on of the relay executors is realized with the help of a time relay which is accomplished on thyratrons with a cold cathode type MTKh-90 (L_2L_3). The interval between 2 switching-ons is determined by the time constant of the grid circuit L_3 (R_{15}, R_{16}, C_6). Maximum value of the interval is 5 minutes.

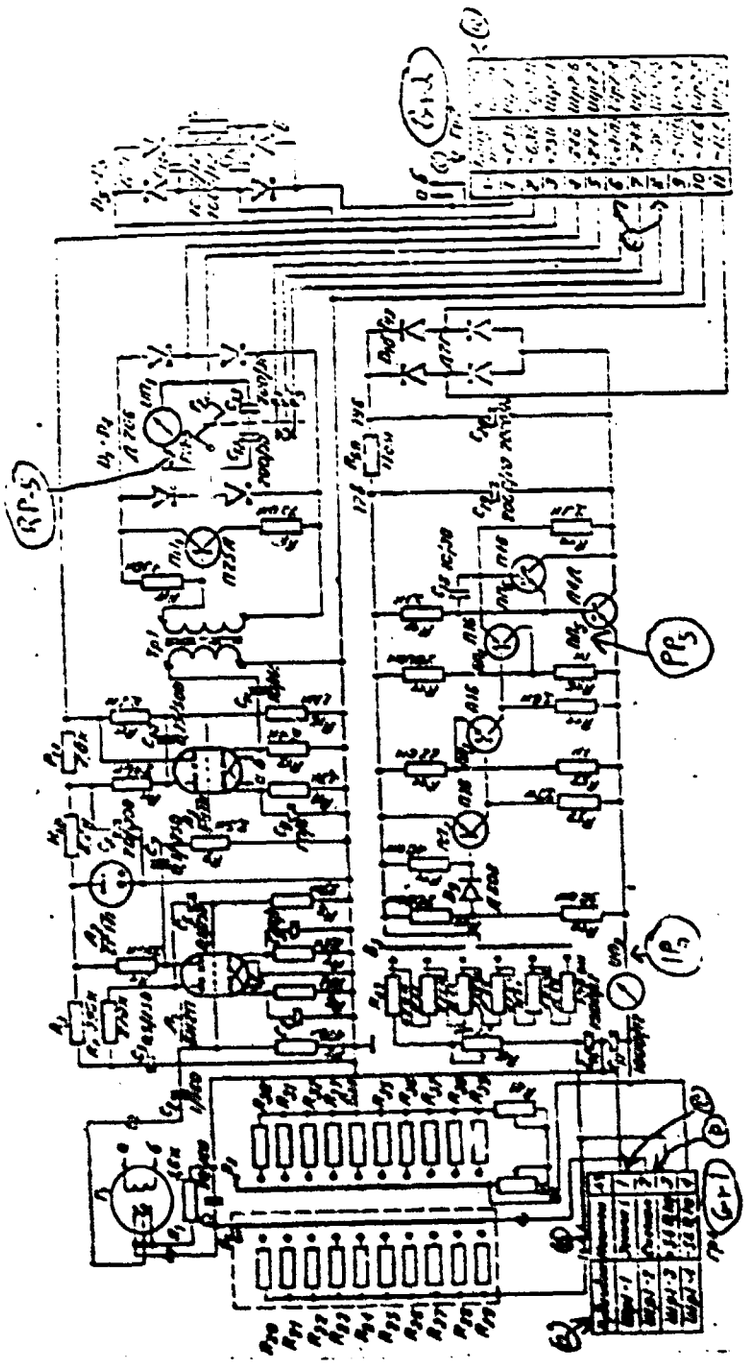

Fig. 3. Basic circuit for the measuring unit of the CO_2 analyzer.
Key: a - there to; b - name; c - ground 1; d - signal; e - contacts.
Note: The only designations transliterated are those mentioned in the text. The remainder have been left in the Cyrillic.

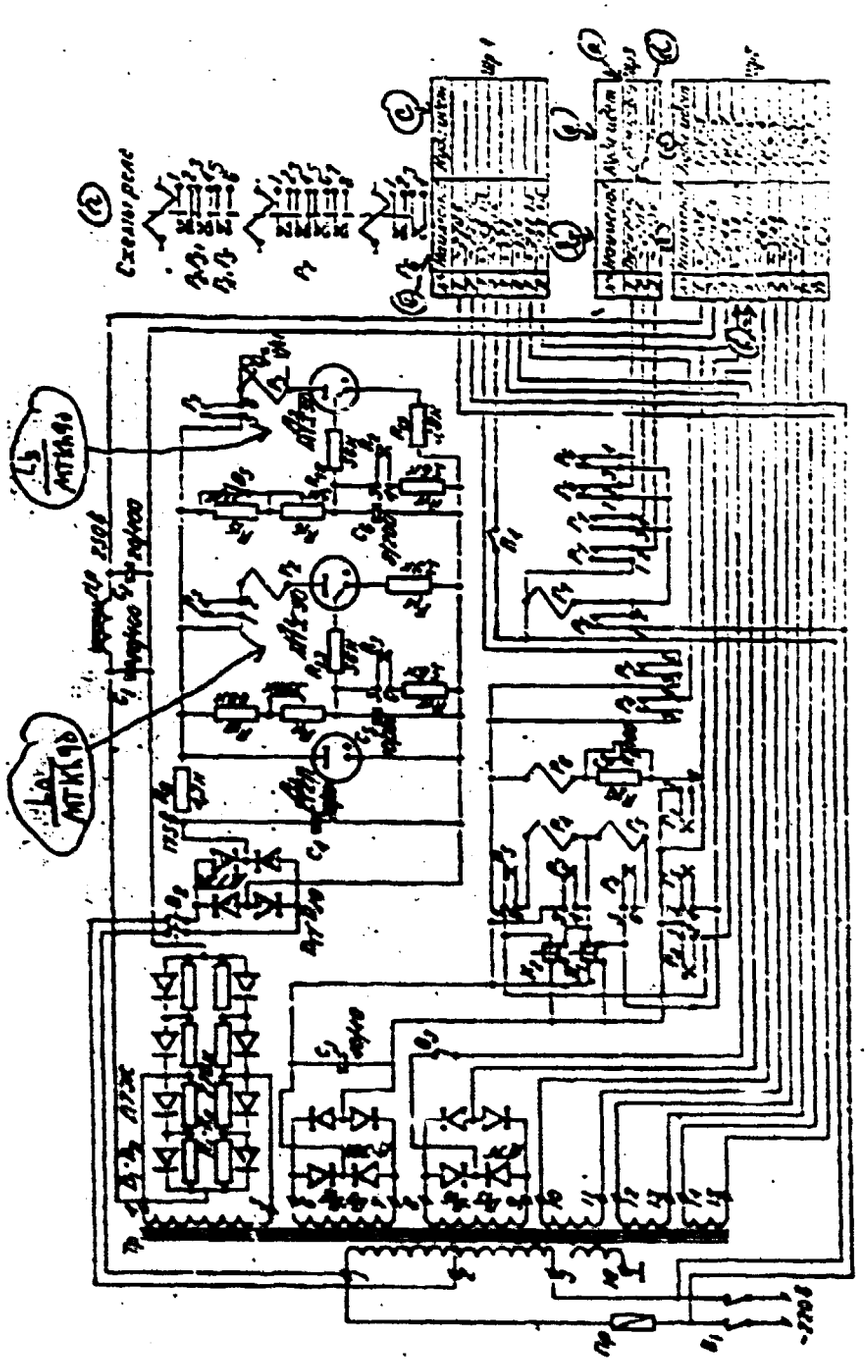

Fig. 4. Basic circuit for the automation and power supply unit.
Key: a - relay circuit; b - name; c - there to; d - starting of winding; e - compressor; f - contacts.

With the firing of thyratron L_2 the relay P_3 is triggered, switching on the circuit of the anode power supply L_3 and the plus of the power supply for relay executors P_4 and P_5. At the same time a circuit is opened which short-circuits the reservoir capacitor C_5 in grid L_2.

The time constant of grid circuit L_2 (R_{10}, R_{11}, C_5) determines the burning time of L_3, and correspondingly the time of operation of the relay executors. This can vary from 1 to 4 seconds. Following the firing of thyratron L_2 the relay P_2 operates, opening the circuit of anode power supply L_3, as a result of which the circuit is restored to its initial condition and the process of buildup on C_6 begins again.

The minus of the power supply source is supplied on relays P_4 and P_5 through the contacts of polarized relay RP-5. Depending on the polarity of the signal of pickup unbalance, which is determined by the excess or deficiency of CO_2 in the gaseous mixture relative to the established value, the contacts of RP-5 close the circuit of the winding either of relay P_4 with contacts 2-3 or relay P_5 with contacts 2-1. As a result of this, during the operation of the time relay the power supply circuit is completely closed only for one of the relay executors.

During operation relay P_4 switches on the magnetic valve which supplies CO_2 to the aeration system. Relay P_5 switches on the compressor which supplies the portion of sterilized air. If at the moment of operation of the time relay the deviation in the percentage of CO_2 from nominal is less than 0.1% the contacts of the polarized relay remain open and the relay executors do not operate.

The possibility is also provided for the manual switching on of the supply of CO_2 and air with the help of buttons K_1 and K_2. This is necessary during the initial setting up of the required concentration of CO_2 and also if there is the necessity of blowing out the air system. All the elements of the system which are necessary in thermostatic control are disposed in a standard thermostat.

On the first working model of the system for suspended cultivation a prolonged check was made of the quality and functional capabilities of the equipment. It was established that the equipment can operate continuously for a number of months, ensuring the prolonged maintenance of the required conditions for cultivation.

Initial documentation for the equipment was transmitted to the design bureau of USSR Academy of Medical Sciences for design processing and production of a test consignment.

The author would like to express his deep thanks to Professor V. M. Zhdanov for his scientific guidance in carrying out this work, to Doctor of Medical Sciences V. I. Gavrilov for help in working out the biological-engineering requirements for the system, and to

graduate student A. S. Novokhatskiy, and to Senior Laboratory Assistant R. G. Zmiyevaya for active participation in carrying out the biological experiment with the equipment being tested (detailed results of the biological experiment performed on the equipment will be published separately).

The author would also like to express his thanks to coworkers Kh. A. Bedretdinov, I. N. Nikonov, and M. I. Slugin from the Laboratory of Bioelectronics at the Institute of Virology imeni D. I. Ivanovskogo for taking part in the preparation and adjustment of the equipment.

Literature

1. Pol, D., Cell and Tissue Culture, Moscow, 1963.

2. Graff, S., McCarty, K. S., Exp. Cell Res., 1957, v 13, p 548.

3. Myers, J., Clark, L. B., J. gen. Physiol., 1944, v 26, p 103.

4. Monod, J., Ann. Inst. Pasteur., 1950, v 79, p 390.

5. Novick, A., Szillard, L., Science, 1950, v 112, p 715.

6. Telling, R. C., Elsworth, R., Biotechnol. and Bioeng., 1965, v 7, p 417.