UNCLASSIFIED

AD NUMBER
AD470147
LIMITATION CHANGES
TO: **Approved for public release; distribution is unlimited.**
FROM: **Distribution authorized to U.S. Gov't. agencies and their contractors; Administrative/Operational Use; SEP 1965. Other requests shall be referred to Arnold Engineering Development Center, Arnold Air Force Station, TN.**
AUTHORITY
AEDC ltr, Jul 1975

THIS PAGE IS UNCLASSIFIED

AEDC-TR-65-187

ARCHIVE COPY
DO NOT LOAN

DESIGN AND INITIAL CALIBRATION OF A MAGNETIC SUSPENSION SYSTEM FOR WIND TUNNEL MODELS

C. D. Crain, M. D. Brown, and A. H. Cortner

ARO, Inc.

This document has been approved for public release its distribution is unlimited. Per DDC TR-75/5 AD A011 700 Rtd July 1975

September 1965

PROPERTY OF U. S. AIR FORCE
AEDC LIBRARY
AF 40(600)1200

VON KÁRMÁN GAS DYNAMICS FACILITY
ARNOLD ENGINEERING DEVELOPMENT CENTER
AIR FORCE SYSTEMS COMMAND
ARNOLD AIR FORCE STATION, TENNESSEE

AEDC TECHNICAL LIBRARY
5 0720 00031 1318

NOTICES

When U. S. Government drawings specifications, or other data are used for any purpose other than a definitely related Government procurement operation, the Government thereby incurs no responsibility nor any obligation whatsoever, and the fact that the Government may have formulated, furnished, or in any way supplied the said drawings, specifications, or other data, is not to be regarded by implication or otherwise, or in any manner licensing the holder or any other person or corporation, or conveying any rights or permission to manufacture, use, or sell any patented invention that may in any way be related thereto.

Qualified users may obtain copies of this report from the Defense Documentation Center.

DESIGN AND INITIAL CALIBRATION OF A MAGNETIC SUSPENSION SYSTEM FOR WIND TUNNEL MODELS

C. D. Crain, M. D. Brown, and A. H. Cortner
ARO, Inc.

This document has been approved for public release its distribution is unlimited. Per DDC TR-75/5 AD A011900 Dtd July 1975

AF - AEDC
Arnold AFS Tenn

FOREWORD

The research reported herein was sponsored by the Arnold Engineering Development Center (AEDC), Air Force Systems Command (AFSC), under Program Element 62405334, Project 8952, Task 895201.

The results of research presented were obtained by ARO, Inc. (a subsidiary of Sverdrup and Parcel, Inc.), contract operator of AEDC, Arnold Air Force Station, Tennessee, under Contract AF 40(600)-1200. The research was conducted from September 1, 1959, to March 31, 1965, under ARO Project No. VW3007, and the manuscript was submitted for publication on August 6, 1965.

The authors would like to acknowledge the valuable assistance provided by personnel of the Instrumentation Development Section, Instrumentation Branch, von Kármán Gas Dynamics Facility (VKF) during this research program. In addition, the authors would like to thank the Office National d'Etudes et de Recherches Aeronautiques (ONERA) and the Massachusetts Institute of Technology Aerophysics Laboratory for providing information about their experiences with magnetic suspension systems.

This technical report has been reviewed and is approved.

John R. Cureton
Captain, USAF
Gas Dynamics Division
DCS/Research

Donald R. Eastman, Jr.
DCS/Research

ABSTRACT

The design, construction, and initial calibration of a prototype magnetic suspension system capable of supporting models in a wind tunnel are described. Magnetically supported models allow measurements free from the interferences produced by mechanical model supports. The described system is of the "V"-type configuration and is compared to other types of configurations. Initial force calibration data are given, and it is concluded that quantitative force data would be difficult to obtain from the prototype suspension system because of the many interactions involved. This system was, for the most part, designed in 1959 and does not represent the state-of-the-art insofar as magnetic suspension systems are concerned. Recommendations for future magnetic suspension system designs are included as well as a discussion of the types of aerodynamic testing where the use of such a system might be beneficial.

CONTENTS

		Page
	ABSTRACT	iii
	NOMENCLATURE	vii
I.	INTRODUCTION	1
II.	MAGNETIC SUSPENSION SYSTEMS	
	2.1 L Configuration Suspension Systems	4
	2.2 V Configuration Suspension Systems	4
	2.3 Three-Degrees-of-Freedom Suspension Systems	5
III.	SYSTEM DESIGN	
	3.1 General Requirements	5
	3.2 Magnetic Components	7
	3.3 Power Supplies	9
	3.4 Model Position Sensors	10
	3.5 Model Control Networks	11
IV.	SYSTEM CALIBRATION	17
V.	CONCLUSIONS	20
	REFERENCES	21
	BIBLIOGRAPHY	
I.	Magnetic Suspension for Aerodynamic Testing	23
II.	Nonaerodynamic Applications of Magnetic Suspension	25
III.	Telemetry from Magnetically Suspended Aerodynamic Models	27

ILLUSTRATIONS

Figure		
1.	Basic L Configuration Magnetic Suspension System	29
2.	Typical Drag System Block Diagram	30
3.	Basic V Configuration Magnetic Suspension System	31
4.	Basic Three-Degrees-of-Freedom Configuration Magnetic Suspension System	32
5.	Magnetomotive Force versus Support Distance for a Suspended 10- by 0.75- by 0.25-in. Iron Bar	33
6.	Magnetomotive Force versus Supported Weight for Various Support Distances	34
7.	Experimental Single Axis Prototype of Magnetic Suspension System	35
8.	Magnetic Suspension System, Side View	36

Figure		Page
9.	Magnetic Suspension System, End View.	37
10.	Magnetization Curve for One Pole of a Suspension Electromagnet.	38
11.	Operating Console	39
12.	Schematic Diagram of Bias Coil Power Supply.	40
13.	Output Characteristics of Bias Coil Power Supply Connected to Electromagnet Circuit	41
14.	Schematic Diagram of Control Coil Power Supply . . .	42
15.	Control Coil Power Supply	43
16.	Output Characteristics of Control Coil Power Supply Connected to Electromagnet Circuit	44
17.	Power Supply and Control Amplifier Racks	45
18.	Folded Optical System	46
19.	Control Amplifier Block Diagram	47
20.	Schematic Diagram of Control Amplifier	48
21.	Functional Block Diagram of Drag System	49
22.	Drag System Root Locus	50
23.	Axis Rotation of Lift System.	51
24.	Model Position in x-z Plane.	52
25.	Lift x-Axis Block Diagram	53
26.	Calibration Model	54
27.	Suspension Electromagnet Current versus Force for Various Core Sizes	55
28.	Weight and Pulley Arrangement for Suspension System Calibration	56
29.	Lift Force Calibration	57
30.	Drag Force Calibration.	58
31.	Lateral Force Calibration.	59
32.	Pitching Moment Calibration	60
33.	Yawing Moment Calibration	61
34.	Model in Magnetic Suspension System	62
35.	Prototype Magnetic Suspension System	63

NOMENCLATURE

ac	Alternating current
$C_{1,2,3}$	Gain factor
D	Drag force, lb
dc	Direct current
F	Force, lb
$F'_{i,z}$	Derivative of force with respect to i, z
$G_{1,\ldots,5,a,b,T}$	Transfer function
g	Acceleration of gravity, 386 in./sec^2
I	Steady-state current, amp
$I_{1,\ldots 4,D}$	Coil current, amp
i	Instantaneous current, amp
J	Moment of inertia
$K_{1,\ldots 5,a,\ldots d}$	Gain factor
L	Coil inductance, henrys
ℓ_1, ℓ_2	Distance from model center of gravity to either end, in.
M	Mutual inductance, henrys
M_∞	Free-stream Mach number
m	Mass, lb-sec^2/in.
mmf	Magnetomotive force, ampere-turns
NI	Ampere-turns
P_o	Stagnation pressure, psia
p	Laplace transform variable
R	Coil and series resistance, ohms
$T_{1,\ldots,8,M,D}$	Time constant, sec
T_o	Stagnation temperature, °F
t	Time, sec
v	Instantaneous voltage, v
W	Model weight, lb

x, y, z	Cartesian coordinates
$\ddot{z}$	Second derivative of z with respect to time t
θ	Displacement angle of model, radians
$\overline{I}, \overline{V}, \overline{X}, \overline{Z}, \overline{\theta}$	Laplace transformed variables

SECTION I
INTRODUCTION

The need for aerodynamic measurements free from the effects of the model support mechanism has been a continuing problem for experimental aerodynamicists. Various techniques have been employed to reduce or, in some cases, completely eliminate model support interference. For instance, models supported by small wires extending to the wind tunnel walls have been tested with some success although the interference effects caused by the wires have not been fully assessed. Tunnel starting transients and model aerodynamic loads impose limitations on the smallness of the wires used for this purpose. Models have been dropped into or through the test environment for a number of years; however, model attitude is difficult to control and the test duration is short. More recently, gun-launched, free-flight models have been tested in various aerodynamic test facilities, but again the test duration is limited.

The thought of using magnetic fields to support a model in a wind tunnel has, no doubt, occurred to aerodynamicists for a number of years.[1] Although not widely used, the magnetic support of wind tunnel models is not a new art. A magnetic suspension system that enabled interference-free drag measurements was reported in 1957 by Tournier and Laurenceau of the Office National d'Etudes et de Recherches Aeronautiques (ONERA) (Ref. 2). It is understood that the ONERA had a workable magnetic suspension system as early as 1955, and that the NACA (now NASA), Ames Laboratory, California, built and tested a model support system using magnetic suspension techniques in 1952. However, the Ames effort was terminated in 1953.

Since the initial reporting of their magnetic suspension success in 1957, the ONERA has done subsequent work on improvement of their system's dynamic response characteristics (Ref. 3) as well as obtaining drag measurements (Ref. 4), base pressure measurements (Ref. 5), and telemetry signals (Ref. 6) from magnetically supported wind tunnel models. In 1962, Clemens reported the radio telemetry of model stagnation pressures using the ONERA's magnetic suspension facilities (Ref. 1).

---

[1]It would appear that the intense magnetic fields required to support a wind tunnel model might introduce intolerable magnetogasdynamic effects, and the advantages gained toward free-flight simulation by the elimination of the model mechanical supports might well be lost. However, a study by Clemens indicates that in ordinary wind tunnel testing, at flow velocities lower than 7000 ft/sec, magnetogasdynamic force interactions should not be expected to exceed 0.001 percent (Ref. 1).

Chrisinger, of the Massachusetts Institute of Technology (MIT), reported the first significant development effort on a magnetic suspension system for wind tunnel application in the United States (Ref. 7). Further work accomplished by Tilton et al. resulted in an operational suspension system for use with the MIT Mach 4.8 open jet wind tunnel (Ref. 8). The MIT system was basically similar to the ONERA system although the MIT system had been suitably scaled to meet their expected needs. Parker and Kuhlthau, of the University of Virginia, reported a three-axis electromagnetic support which provided for the simultaneous, and yet independent, measurement of the forces on a magnetic body in three mutually perpendicular directions (Ref. 9). The Gas Dynamics Laboratory of the University of Princeton has an operational three-degrees-of-freedom magnetic support designed specifically to suspend models for wake studies (Ref. 10). Finally, it is known that the Royal Aircraft Establishment (RAE) at Farnborough, the University of Southampton, and the Langley Research Center, NASA, are actively engaged in the development of magnetic suspension systems for possible wind tunnel application.

The initial effort directed toward the development of a magnetic suspension system for wind tunnel models at the von Karman Gas Dynamics Facility, AEDC, was begun in 1959. At that time, it was felt the support-interference-free aerodynamic measurements that were possible with such a system justified a development program. Since that time, progress has been made periodically toward the development of a prototype magnetic suspension system. The design, construction, and initial calibration of the prototype system are described in this report. It is to be understood, however, that the described magnetic suspension system was, for the most part, designed in 1959 and does not represent the present state-of-the-art insofar as suspension systems are concerned.

SECTION II
MAGNETIC SUSPENSION SYSTEMS

Systems that provide for the magnetic support of material are often designated either "active" or "passive". Passive magnetic suspension systems are those systems which utilize magnets of fixed field strength. Magnetic suspension of shafts or spindles of rotating machinery and instruments is usually of the passive type. Systems of the passive type are usually in a state of unstable equilibrium. Active magnetic suspension systems are those systems which utilize feedback techniques for automatic control of the magnet field strength. Suspension systems successfully developed for the support of wind tunnel models have been of the active type. However, the discontinued development effort at Ames mentioned in Section I was of the passive type. Geary has published

a very good reference on magnetic and electric suspensions, both passive and active, which also contains an excellent bibliography (Ref. 11). Another bibliography was published and was primarily concerned with wind tunnel applications of magnetic suspension (Ref. 12). A listing that includes some of the more recent publications concerning magnetic suspension is given in the bibliography of this report.

For some time now, feedback techniques have been applied to magnetic suspension systems. The principle of operation of such a system was first devised by Beams and Holmes, of the University of Virginia, and was reported by Holmes in 1937 (Ref. 13). However, this and other early applications of magnetic suspension were only concerned with active or controlled support along a single axis. A magnetic suspension system used for the support of wind tunnel models must provide for support along several axes. Figure 1 illustrates such a system.

The horseshoe-type electromagnet located above the model supports the model against the force of gravity and provides control in the vertical direction. The model must either be made of a magnetic material or be nonmagnetic with a magnetic material insert. Lateral control is provided by a second horseshoe-type electromagnet placed in the horizontal plane. The lateral electromagnets can either attract or repel the model as required. Axial control is provided by the air-core solenoid placed upstream of the model. Means for controlling roll are not illustrated in Fig. 1 since most of the magnetic suspension systems in operation do not have this capability. A number of methods for controlling roll have been considered, and some have been experimentally investigated at MIT.

The position of the model is monitored by light beams passing through the tunnel test section and focused onto photocells. Signals from the photocells, proportional to the model position, control the amount of current that is allowed to flow through the electromagnets and solenoid. Currents, flowing through the magnet coils, produce forces on the model which oppose the aerodynamic and gravitational forces applied to the model and hold the model in a balanced condition.

Because of the magnet coils' time lags caused by their inductance and the model's zero damping and negative spring constant effect, a closed-loop system with only proportional control is inherently unstable. Suitable compensation networks or control amplifiers must be inserted into the feedback loop to obtain stable suspension of the model. A block diagram of the drag portion of a typical magnetic suspension system is shown in Fig. 2.

2.1 L CONFIGURATION SUSPENSION SYSTEMS

The suspension system illustrated in Fig. 1 is usually referred to as being in an "L" configuration because of the relative location of the lift and lateral electromagnets. This type of system has a conventional form of coordinates and is, in principle, the least complex with regard to reduction of force data from the measurement of coil currents. The entire model weight and lift force must be counteracted by a single horseshoe electromagnet. L configuration systems with larger load capabilities may have accompanying coil cooling and power amplifier capability problems. The lateral electromagnet must be provided with a bias winding in addition to a winding with controlled current flow, or it must be supplied with a source of bidirectional current since it is required to repel as well as attract the supported model. Drag forces are counterbalanced by an air-core solenoid placed upstream of the model and wound concentric with the wind tunnel. The use of a schlieren system to visualize the flow is made difficult because the usual horizontal light path is obstructed by the lateral electromagnets. A schlieren system may be used, however, since a relatively unobstructed area can be made available centered 45 deg from the vertical plane and normal to the tunnel centerline.

L configuration suspension systems are in operation at MIT and ONERA, and the RAE, Farnborough, has a working system in the laboratory.

2.2 V CONFIGURATION SUSPENSION SYSTEMS

The suspension system illustrated in Fig. 3 is commonly referred to as being in a "V" configuration, again because of the relative location of the electromagnets. The two horseshoe electromagnets are displaced symmetrically by 45 deg from the vertical plane, and therefore the magnetic force required to counteract the lift and gravitational forces on the model is supplied by both. This reduces the design problems since the coil cooling and power amplifier requirements are less demanding. Lateral forces are also counterbalanced by the two horseshoe suspension electromagnets, thereby eliminating the need for lateral bias windings or bidirectional current sources. Drag forces are counterbalanced by an air-core solenoid as in the L configuration. In general, the reduction of force data from the measurement of coil currents is more complex than with the L configuration. Conventional schlieren systems may be used since a clear area can be made available centered around a horizontal axis normal to the tunnel centerline.

V configuration systems are in operation at ONERA and l'Ecole de Physique et Chimie at Paris. It is this type of configuration with which the VKF effort has been concerned and which is described in this report.

2.3 THREE-DEGREES-OF-FREEDOM SUSPENSION SYSTEM

Figure 4 illustrates a type of system that controls the movement of a model in three directions, hence the name "three-degrees-of-freedom". One such system consists of five coils: a drag control and bias solenoid combination, and two sets of lateral control and lateral bias coils. As with the L configuration, the lateral bias coils, in lieu of bidirectional current sources, are required to control lateral movements of the model. With respect to the V and L system, this system is the least complex in terms of the amount of equipment, model control, and system analysis. This results from the fewer degrees of freedom to control, the elimination of horseshoe magnet coil mutual inductances, and the elimination of force couples acting on the model. Since this system cannot control model attitude, it is limited to supporting models having a rotationally symmetrical shape.

A three-degrees-of-freedom system is in operation at Princeton University, and one with slight variations from that described above is in operation at the University of Virginia where the basic type of configuration was first conceived and developed.

SECTION III
SYSTEM DESIGN

3.1 GENERAL REQUIREMENTS

When the VKF effort for the design of a magnetic suspension system was initiated in 1959, magnetic suspension technology, particularly that pertaining to relatively large-scale systems as would be the case for wind tunnel applications, was very limited. Only the ONERA had reported a working system (Ref. 2). In this country, Chrisinger was developing such a system at MIT (Ref. 7). It was understood that the VKF effort would be directed toward the development of a prototype system with the thought in mind that it might possibly be adapted to a future supersonic wind tunnel with a nominal 12-in. -diam test section.

Preliminary information for the proposed wind tunnel, which served as criteria for the design requirements of the suspension system, was as follows:

Tunnel type:	Free jet, intermittent operation
Operating Conditions:	M_∞ = 3, 4, and 5
	P_0 = 5 to 125 psia
	T_0 = 60 to 100°F
Nozzle type and size:	Contoured axisymmetric Test section diameter - 12 in. Nozzle length - 72 in.
Model loads:	Drag - 10 lb Lift - 15 lb (including model weight)
Model sizes:	6.5 to 11 in. in length

In addition to the static loads given above, the suspension system was to magnetically accommodate, if possible, the transient loads associated with the wind tunnel starting and stopping processes. No real estimate was made as to the amplitude of these transient loads although it is known that they can, depending on the particular wind tunnel under consideration, be as much as an order of magnitude larger than the static model loads. In some cases, ONERA has found it more feasible to mechanically support the model during these periods of impendent transient forces. On the other hand, MIT has had success without resorting to any means of mechanical support.

No provision was to be made for accommodating large changes in model attitude although small changes were desirable to explore the possibility of using the system for dynamic stability testing.

The design proved to be one that could be best approached by a combination of experimental and theoretical methods. One of the very basic bits of information needed was the approximate amount of magnetomotive force (mmf) required to counteract the forces expected on the model. The fact that the electromagnets and solenoid of the system are not isolated magnetic circuits results in a magnetic field theory problem whose solution is quite complicated. Handbooks on magnetic circuit design proved to be of little value since they include only circuits whose air gaps are relatively small - usually air gaps whose length is less than the width of the pole face. The effect of the electromagnets on the solenoid precluded the use of published data for the solenoid design. Therefore, it was concluded that the simplest approach to the design of the magnetic components was an experimental one.

The remainder of the system - the power amplifiers, model position detectors, control amplifiers, and power supplies - was designed using conventional circuit analysis and feedback theory.

3.2 MAGNETIC COMPONENTS

3.2.1 Electromagnets

As mentioned earlier, the basic problem in designing the magnetic components for a suspension system is the determination of the mmf required to support the model and counteract the aerodynamic forces exerted on it. This information can best be acquired, particularly for the electromagnets, from data obtained by constructing a small prototype of the desired configuration. Such a model was built and tested for its electromagnetic properties. The experimental model was a horseshoe-shaped electromagnet with a center-to-center pole separation of 8.5 in. and pole face areas of 1.5 in.^{2}. Figure 5 shows the mmf required to support a 10- by 0.75- by 0.25-in. iron bar at various distances from the magnet. Figure 6 shows the mmf required to counteract various forces applied to the iron bar for several support distances. However, these data should be considered in a very general way because changes in the electromagnet or model geometry could produce quite different results.

From the data gained through experiments with the small electromagnet, the approximate size of the suspension magnets was established. One end of a horseshoe suspension electromagnet was fabricated to assess the validity of scaling the data obtained with the small electromagnet to the size required to support the design loads. This electromagnet along with its power supplies and control circuits is shown in Fig. 7. After experimenting with this electromagnet it was decided to increase the core size and the number of coils on the core.

Because of the large lift force requirements it was decided to use a V configuration for the suspension magnets. This configuration uses two identical horseshoe electromagnets inclined 45 deg to the vertical plane. Figure 3 shows the basic arrangement of the coil system, and Figs. 8 and 9 are photographs of the actual installation. By using the V arrangement, the suspended load is shared by the two horseshoe electromagnets.

Each of the suspension magnets uses two sets of windings per pole: a set of bias windings and a set of control windings. The bias windings supply a large portion of the mmf necessary for model suspension. This reduces the amount of controlled current that must be made available for actual operation. The amount of bias necessary depends to some extent on the size of the model core. A model with a 1-3/4-in.-diam by 10-in.-long mild steel core requires approximately 50 percent of the total mmf to be supplied by the bias windings in order for the control winding current to be in a desirable operating range. A model with a 1-in.-diam by 10-in.-long core uses about 80-percent bias mmf. The remainder of the necessary mmf for model suspension and force counteraction is supplied by the control windings of the magnets.

The bias and control windings are each made up of individual coils connected in parallel. All coils are wound with high temperature film-coated Beldtherm® wire. The coils are separated by 1/2-in. air spaces and are convection cooled. This type of cooling is sufficient for intermittent operation, but under continuous operation and heavy loading the coils become hot. As the coils heat, the resistance of the wire increases, causing the bias mmf to be reduced. This drift could not be tolerated in a system required for continuous operation.

The bias windings are composed of five coils, each containing 4820 turns. The bias circuit is designed to initially provide a total of 61,000 ampere-turns (NI) for the bias winding on each pole piece. Each control winding uses four coils, each containing 2000 turns, initially providing 43,000 NI of control mmf. A total of 104,000 NI is initially available from each pole piece of the two magnets. An increase in the coils' resistance because of their heating reduces the maximum current flow. This reduced maximum current level necessitates a correction factor to be applied to the maximum available mmf which reduces the total mmf to 84,000 NI per pole. A magnetization curve for a single pole of the suspension magnets is shown in Fig. 10. These data were taken with the flux sensor at the center of one of the pole faces where the flux density is considerably less than that at the core edges. Therefore, the conclusion should not be made from the data presented in Fig. 10 that the iron used for the cores saturates at 4000 to 5000 gauss. The data do indicate that applied mmf above 45,000 NI does little to increase the usable flux at the magnet pole faces. The data also indicate that, at the higher loads where the applied mmf is greatest, severe nonlinearities are introduced into the system. Magnet core material exhibiting a higher saturation level than that used would improve the linearity of the coil current versus supported force correlations.

3.2.2 Drag Solenoid

The air-core windings used to counteract drag forces exerted on the model are in the form of an annulus with an ID of 13 in. and an OD of 19 in. Two coils having 2650 turns each form the bias winding and provide 27,500 NI of mmf. The control winding uses four coils of 1370 turns each to produce 33,000 NI. A total of 49,000 NI is available after applying the correction factor for coil heating. The design criteria called for the ability to counteract drag forces up to 10 lb. This goal was not achieved with the model used in the calibration procedure because the maximum drag force counteracted was 5 lb. This limitation was the result of the distance the suspended model was from the face of the drag solenoid. Because of the physical size and arrangement of the coils it was not possible to get the drag coil closer than five inches to the nose of

the calibration model. A model whose length was sufficient to allow the nose to lie nearer the drag coil was tested and counteracted drag forces up to 18.5 lb.

3.3 POWER SUPPLIES

3.3.1 Bias Coil Power Supply

The bias coil power supply produces a variable output from 0 to 720 v dc with a maximum current of 12.7 amp. The input source for this supply is three-phase, 480-v, 60-cps power, and is applied to a three-phase, motor-driven, variable transformer. Secondary voltage of the transformer is adjustable from 0 to 550 v ac and is controlled from the suspension system operating console (Fig. 11). This voltage is applied to a three-phase, full-wave, silicon rectifier bridge circuit. The positive and negative outputs of the bridge circuit are connected to the bias coils as shown in Fig. 12, and the operating characteristics of the power supply are shown in Fig. 13.

3.3.2 Control Coil Power Supply

This power supply serves as a high gain, direct current, power amplifier whose output is a function of the position of a suspended model. Primary requirements for the control coil power supply are high power handling capability, low ripple factor, and fast response time. A six-phase, half-wave star configuration, using grid-controlled rectifiers (thyratrons), was chosen as the basic circuit since it satisfied the above requirements.

Input power for the supply is derived from three, 10-kva, 480- to 960-v a-c transformers. The primaries of the transformers are connected in a three-phase delta and their center tapped secondaries in a six-phase star arrangement. A schematic diagram of the supply is shown in Fig. 14. "Chimney"-type construction was used to provide ventilation for the thyratrons (Fig. 15).

Output voltage of the thyratron rectifiers is controlled by a fixed amplitude a-c voltage superimposed on a d-c control voltage applied to the grid circuits of the tubes. The necessary 90-deg phase lag between the a-c grid bias and plate voltage is accomplished by using a resistor-capacitor (RC) phase shift network connected to a filament transformer. A potentiometer is used as a portion of the resistance for each RC network to provide an adjustment for phasing the a-c bias. A negative 8 v dc is required to hold the thyratrons below their cutoff level and is supplied by the control amplifier when no model is suspended. The level

of the d-c bias voltage is variable and is used as a model position control. Placing the model in the path of the light beams of the optical system causes the output voltage to increase in a positive direction. When the control voltage exceeds the critical grid voltage of the thyratrons, they start conducting, producing current flow in the control coils. The magnitude of the control voltage determines the firing angle of the thyratrons and consequently the amount of current in the coil. An amplifier output of positive 12 v dc is required to obtain full output from the supply. Maximum output capability of the power supply is 24 amp at 600 v dc. Output characteristic curves of this supply when connected to one of the electromagnet circuits are shown in Fig. 16. All power supplies required for operation of the magnetic suspension system are shown in Fig. 17.

3.4 MODEL POSITION SENSORS

The suspension system uses five separate optical systems for the model position sensing as indicated in Fig. 3. Four of the systems produce the light beams on which the model is suspended and are designated as lift optical systems. These systems detect vertical and lateral displacement of the model. The fifth or drag optical system senses translational movements of the model along its axis. All of the optical systems have the same mechanical structure and operational characteristics and are of the "double pass" or "folded" type (Fig. 18).

The optical systems are rigidly attached to three rings which surround the test section of the suspension system (Fig. 8). Two lift optical systems are mounted on each of the two forward rings, the drag optics being attached to the downstream ring. The position of these rings is adjustable along the axis of the test section to provide a means for accommodating models of different lengths.

An optical system must satisfy two primary requirements for successful model suspension, these being fast response time and high stability. An LS-400 silicon photocell is used as the sensing element. This device has a rise time of 1.5 μsec and a fall time of 15 μsec. These time constants are negligible in the closed-loop control system response. In addition to meeting the required response time, the sensor exhibits very stable environmental characteristics.

In the folded optical system the light sensor is located adjacent to the light source, which tends to further stabilize the system against temperature drift since the lamp serves as a constant temperature oven for the sensor. A subminiature lamp (type 323) is used as the light source. The lamps are derated and powered by a regulated d-c power supply to ensure long life and constant illumination for the optical systems.

The sensor is used as a variable resistance element in one leg of a Wheatstone bridge circuit. The bridge is balanced with a maximum light condition on the sensor. As the model is inserted in the light beam the amount of light falling on the sensor is decreased. A corresponding increase in sensor resistance unbalances the bridge circuit and produces a proportional error signal for the control amplifier.

3.5 MODEL CONTROL NETWORKS

The configuration of the model control magnets (Fig. 3) indicates that five degrees of freedom of a model can be controlled. The four lift magnets control vertical and lateral movements, and the drag solenoid controls longitudinal movement.

Since model interactions and coil mutual inductances are minimum for the drag system, it was chosen as the starting point for designing the control networks.

3.5.1 Drag Control System

Of the several methods for determining and analyzing the operational form of the control stabilizing networks, the root-locus method was chosen because of its ability to picture the entire character of a system in terms of system loop gain and component time constants. A block diagram indicating the components of the drag system is shown in Fig. 2.

Before considering the type of controller required to stabilize a model, the dynamics of the model suspended in a magnetic field and the response characteristics of the drag solenoid will be discussed. The transfer functions of these two components are relatively fixed, and any compensation for instabilities must be accomplished by means of a control amplifier.

3.5.1.1 Model Transfer Function

To determine the stability of a model, the forces acting on the model must be considered. In the drag system the two forces acting on the model are drag and magnetic. The magnetic force is proportional to the magnetic field strength, which in turn is proportional to the model location, z, and the coil current, I. Using these forces the force balance equation can be written

$$m\ddot{z} = F(i, z) - D \tag{1}$$

By the use of a Taylor series expansion of F(i, z), where the higher order terms are neglected, and letting $D = D_0 + \Delta D(t)$, the force equation

converts to

$$m\ddot{z}(t) = F_0 + \frac{\partial F}{\partial z}\Delta z(t) + \frac{\partial F}{\partial i}\Delta i(t) - D_0 - \Delta D(t) \tag{2}$$

In the static case F_0 and D_0 cancel out, and since only stability and damping are to be considered, the term $\Delta D(t)$ can be omitted. This results in the following equation:

$$m\ddot{z}(t) = \frac{\partial F}{\partial z}\Delta z(t) + \frac{\partial F}{\partial i}\Delta i(t) \tag{3}$$

Omitting the delta notation and letting

$$\frac{\partial F}{\partial z} = F'_z \quad \text{and} \quad \frac{\partial F}{\partial i} = F'_i$$

gives

$$m\ddot{z}(t) = F'_z\ z(t) + F'_i\ i(t) \tag{4}$$

Since the movements of the model are limited to small perturbations, the terms F'_z and F'_i are positive constants.

Using Laplace transformations Eq. (4) converts to

$$mp^2\bar{Z} = F'_z\bar{Z} + F'_i\bar{I} \tag{5}$$

Solving for $\frac{\bar{Z}}{\bar{I}}$ gives the model transfer function

$$\frac{\bar{Z}}{\bar{I}} = \frac{F'_i/F'_z}{p^2 m/F'_z - 1} \tag{6}$$

Given in general form the transfer function is

$$G_1 = \frac{\bar{Z}}{\bar{I}} = \frac{K_1}{(pT_M + 1)(pT_M - 1)} \tag{7}$$

where

$$K_1 = F'_i/F'_z \tag{8}$$

and

$$T_M = \sqrt{m/F'_z} \tag{9}$$

The model transfer function is easily seen to represent a second-order system with zero damping and a negative spring constant. This results in static instability of the model. This instability is also indicated by the location of a pole $\frac{\bar{Z}}{\bar{I}}$ on the positive real axis in the complex plane.

3.5.1.2 Coil Transfer Function

Kirchhoff's voltage law provides the relationship between the voltage and current in a coil-resistor circuit.

$$v(t) = R\,i(t) + L\,\frac{di}{dt} \tag{10}$$

Using Laplace transformation results in the coil transfer function.

$$G_2 = \frac{\bar{I}}{\bar{V}} = \frac{1/R}{p\,L/R + 1} = \frac{K_2}{p\,T_D + 1} \tag{11}$$

The coil's time constant, T_D, is equal to L/R where L is the coil's inductance and R is the total circuit resistance. The value of R consists of the coil's resistance plus a series resistance included to decrease T_D. However, the power supply capability imposes a limitation on the maximum value of this series resistance.

3.5.1.3 Power Amplifier Transfer Function

The power amplifier, as stated earlier, is a high power, d-c amplifier. The amplifier's operating characteristics are such that the ratio of the output voltage to the input voltage is assumed to be a constant. The transfer function can be given as

$$G_3 = \frac{\text{change in output voltage}}{\text{change in input voltage}} = K_3$$

3.5.1.4 Model Position Sensor

The characteristics of the position sensor provide an output voltage that is directly proportional to the model's position. The ratio of the sensor's output voltage to the model's position is given by

$$G_4 = \frac{\text{change in voltage}}{\text{change in position}} = K_4$$

3.5.1.5 Control Amplifier Transfer Function

The transfer functions of the coil and model indicate that simple proportional feedback cannot stabilize the system, since no changes would be made in the number of poles on the root-locus plot. In fact, only by the addition of poles or zeros can the locus be forced to lie in the left-hand or stable side of the complex plane.

The general form of the controller's transfer function must necessarily contain a pole located at the origin since integral feedback is required to keep the steady-state error zero and, as shown by work done by Tilton (Ref. 14), must contain at least two zeros. The controller's general block diagram is shown in Fig. 19.

The controller is basically two differentiators in series, paralleled with an integrator. This combination produces a pole and three zeros on the root-locus diagram. Three additional poles were included in the controller's transfer function to eliminate any high frequency instabilities. The controller's transfer function given in general terms is

$$G_5 = \frac{K_5 (pT_1 + 1)(pT_3 + 1)(pT_5 + 1)}{pT_2 (pT_4 + 1)(pT_6 + 1)(pT_8 + 1)} \tag{12}$$

The controller was fabricated from operational amplifiers with the time constants made variable. Using a prototype system and holding the model by hand, the time constants were varied until stable operation was obtained. Conventional synthesis could not be used since the model transfer function could not be obtained until measurements were made on the suspended model. The schematic diagram of the control amplifier is shown in Fig. 20.

3.5.1.6 Total System Transfer Function

The actual system block diagram is given in Fig. 21, and the complete system open-loop transfer function written in conventional root-locus form is

$$G_T = G_1 G_2 G_3 G_4 G_5$$

3.5.1.7 Transfer Function Measurements

With the model suspended, measurements were made to determine the actual model transfer function. The transfer functions of each of the system components are as follows:

1. Model

In order to find the constants F'_z and F'_i, the force equation under equilibrium conditions for small changes in z and I must be considered:

$$\Delta F = F'_z \Delta z + F'_i \Delta I = 0 \tag{13}$$

or

$$F'_z = -F'_i \frac{\Delta I}{\Delta z} \tag{14}$$

F'_z and F'_i can be approximated by

$$F'_z = \frac{\Delta F}{\Delta z} \tag{15}$$

$$F'_i = \frac{\Delta F}{\Delta I} \tag{16}$$

Substituting Eq. (16) into Eq. (14) gives

$$F'_z = -\left(\frac{\Delta F}{\Delta I}\right)\left(\frac{\Delta I}{\Delta z}\right) \tag{17}$$

Using a prototype system the terms $\frac{\Delta I}{\Delta z}$ and $\frac{\Delta F}{\Delta I}$ can be easily measured.

$$\frac{\Delta F}{\Delta I} = 0.35 \text{ lb/amp}$$

$$\frac{\Delta I}{\Delta z} = -3.92 \text{ amp/in.}$$

$$F'_z = -(0.35)(-3.92) = 1.372 \text{ lb/in.}$$

$$m = \frac{W}{g} = 0.0205 \ \frac{\text{lb} - \text{sec}^2}{\text{in.}}$$

$$K_1 = \frac{0.35}{1.372} = 0.255 \text{ in./amp}$$

$$T_M = 0.1225 \text{ sec}$$

$$G_1 = \frac{0.255}{(0.1225\,p + 1)(0.1225\,p - 1)} \ \frac{\text{in.}}{\text{amp}}$$

2. Coil

$$R = 9\,\Omega \text{ solenoid resistance} + 24\,\Omega \text{ external series resistance} = 33\,\Omega$$

$$L = 0.608 \text{ henrys}$$

$$K_2 = 0.030 \text{ amp/v}$$

$$T_D = 0.0184 \text{ sec}$$

$$G_2 = \frac{0.030}{0.0184\,p + 1} \ \frac{\text{amp}}{\text{v}}$$

3. Power Amplifier

$$G_3 = K_3 = 42.4 \ \frac{\text{v}}{\text{v}}$$

4. Position Sensor

$$G_4 = K_4 = 7.42 \ \frac{\text{v}}{\text{in.}}$$

5. Control Amplifier

K_5 = Variable 3.5 to 35 v/v

T_1 = 0.175 sec

T_2 = 0.22 sec

T_3 = 0.023 sec

T_4 = 0.0029 sec

T_5 = 0.0925 sec

T_6 = 0.0022 sec

T_8 = 0.00207 sec

With the controller gain, K_5, set to 10,

$$G_5 = \frac{10(0.175\,p + 1)(0.023\,p + 1)(0.0925\,p + 1)}{0.22\,p(0.0029\,p + 1)(0.0022\,p + 1)(0.00207\,p + 1)} \quad \frac{v}{v}$$

6. Total System

The product of the transfer functions gives

$$G_T = \frac{1.15 \times 10^{10}(p + 5.7)(p + 10.7)(p + 43.5)}{p(p + 8.2)(p - 8.2)(p + 54.5)(p + 344)(p + 454)(p + 483)} \tag{18}$$

The root-locus diagram (Fig. 22) gives the maximum and minimum gain limits for stable system operation. These gains are 2.67×10^{10} and 7.10×10^{8}, respectively. Although the root-locus diagram indicates that the system gain should be 5.46×10^{9} for critical damping of the model, the system was found to operate more satisfactorily at a higher system gain. It is believed that the higher gain requirement results from inaccuracies introduced into the root-locus diagram by the linearizing assumptions made in determining the transfer functions.

3.5.2 Lift Control System

The configuration of the lift magnets produces a complex system having model force interactions and coil mutual inductances; however, by rotating the system axis as shown in Fig. 23, the lift system can be divided into two equal and independent components for the purpose of analysis. Referring to Fig. 24, it can be shown that the force and moment equations describing the motions of the model in the x-z plane, expressed in Laplace transform notation, are

$$(mp^2 - C_1)\,\bar{X} = C_2\bar{I}_1 + C_3\bar{I}_2 \tag{19}$$

$$Jp^2\bar{\theta} = K_a\ell_1\bar{X}_1 + K_b\ell_1\bar{I}_1 - K_c\ell_2\bar{X}_2 - K_d\ell_2\bar{I}_2 \tag{20}$$

$$\bar{X}_1 = \bar{X} - \bar{\theta}\ell_1 \tag{21}$$

$$\bar{X}_2 = \bar{X} + \bar{\theta}\ell_2 \tag{22}$$

The current interactions caused by coil mutual inductance for the magnets acting in the x plane, expressed in Laplace transform notation, are

$$\bar{I}_1 = \frac{\bar{V}_1(R + pL)}{p^2(L^2 - M^2) + p(2LR) + R^2} - \frac{\bar{V}_2 Mp}{p^2(L^2 - M^2) + p(2LR) + R^2} \tag{23}$$

$$\bar{I}_2 = \frac{\bar{V}_2 (R + pL)}{p^2 (L^2 - M^2) + p(2LR) + R^2} - \frac{\bar{V}_1 Mp}{p^2 (L^2 - M^2) + p(2LR) + R^2} \tag{24}$$

Writing in terms of transfer functions gives

$$\bar{I}_1 = \bar{V}_1 G_a - \bar{V}_2 G_b \tag{25}$$

$$\bar{I}_2 = \bar{V}_2 G_a - \bar{V}_1 G_b \tag{26}$$

Using the above equations the block diagram in Fig. 25 was drawn. Neglecting the model force interactions and the coil mutual inductances, the lift block diagram reverts to one similar to the drag system, thus giving a starting point for designing the lift control amplifiers. With this first order approximation in mind, and since the lift system is symmetrical, four lift control amplifiers were constructed having the same form and same time constants as those derived for the drag system. The gain of each lift control amplifier, as in the case of the drag control amplifier, was made adjustable to enable changes in the overall system loop gain. Although the lift system transfer function and accompanying root-locus diagram were not obtained because of the system complexity, the choice of time constants proved satisfactory since stable model operation was achieved. The desired system damping was obtained by observing the model displacement signals on an oscilloscope and adjusting all amplifier gains.

Although the control system was designed for a model mass of 0.0205 lb-sec^2/in., several other models of different mass were successfully suspended with only changes in system gain necessary.

SECTION IV
SYSTEM CALIBRATION

In a magnetic suspension system the magnetic forces applied to a model are proportional to the coil currents and the relative model position. The magnetic forces are equal and opposite to any external forces. These external forces can be determined by measuring the coil currents and then applying appropriate calibration data.

Since the magnetic balance discussed in this report has never been subjected to actual wind tunnel operating conditions, the data presented in this section result from a static calibration. The system was calibrated for lift, drag, and lateral forces, and yawing and pitching moments. Some of the interactions produced by the effect of one magnetic field acting upon another are also shown in this calibration.

The test performed on this system is the same that would be required if the system were used in a 12-in.-diam wind tunnel. The model was suspended at a distance of 10 in. from the pole faces of the lift magnets and five inches from the drag solenoid.

The model (Fig. 26) used for calibration consisted of a 2-in.-OD, 1-3/4-in.-ID micarta shell with a 1-3/4-in.-diam mild steel core. The combined weight of the model and the calibration weight pans was 7 lb 14 oz. The effect of model core diameter on the suspension system's lift force ability is shown in Fig. 27. Models having cores greater than 1-3/4 in. in diameter were not investigated because of the model size limitations imposed by the intended wind tunnel test section size.

Since the calibration was to include the effects of pitching moment, the model was preloaded at its center of gravity. A 3-lb tare weight was used for this purpose. By shifting this weight to the nose of the model, it was possible to apply a pitching moment without changing the total lift load. The yawing moment was produced by applying a couple to the model. This couple was produced by applying lateral forces in opposite directions at the nose and tail of the model. All forces were applied to the model through pulley arrangements as shown in Fig. 28.

Although the model is normally held in the same position in space, because of the action of the integrator in the control amplifier feedback circuit as the applied forces are varied, its position can be manually changed to allow testing at different attitudes. However, in calibrating the magnetic balance it is necessary to know the model's position at all times. For the static calibration performed, the model's lateral and vertical positions were monitored with two cathetometers, one sighted on each end of the model. The drag position was monitored by using an optical sensing system composed of a light source, lens, and a silicon solar cell. The solar cell, connected in a bridge arrangement, was masked to produce an output of 1 mv for an axial movement of 0.001 in. Under tunnel operating conditions, all position indicators would likely consist of an optical system similar to that used for the axial movement detection.

As was stated earlier, the forces applied to the model can be measured as a function of the amount of current in the magnet coils. The coil currents are measured by using calibrated shunts in series with each of the bias and control windings of the magnets. The bias current shunts are calibrated to produce a 100-mv signal for full-scale current of 15 amp. The control current shunts are calibrated for a 100-mv output for a full-scale current of 20 amp. A sensitive voltmeter and an oscillograph were used as the readout instruments in measuring the currents in each of the coils. Data obtained from both instruments were compared to ensure accuracy of measurements. An operational system would require a more

precise method of measurement to achieve the required degree of accuracy needed in wind tunnel testing. A more desirable data acquisition method would be that of converting the millivolt signals developed at the shunts to a digital signal, storing the information on magnetic tape, and reducing the data on a computer.

The balance calibration was performed with the model at 0-deg angle of attack. If a model were to be tested at angles other than 0 deg, it would be necessary to calibrate for each angle of expected operation. This is necessary because of the changes in the interactions of the electromagnetic fields caused by the movement of the model.

Calibration of each of the five force and moment components was carried out by increasing the applied forces in incremental steps and recording the coil currents. These individual calibrations show the capabilities of measuring each component in the absence of interacting fields with the exception of the yawing and pitching moment measurements. Since there was no airflow across the model it was necessary to apply a small drag force during the two latter calibrations to prevent the model from moving forward. To determine the interactions between the five components, the same loads were placed on the model as in the initial procedure, but with additional loads applied to each of the other components. Figures 29 through 33 show the results of the calibration and associated interactions. The lift forces indicated do not include the model or tare weight. Each force or moment is plotted against the sum of the individual coil currents (Fig. 3) according to the following equations:

Lifting Force

$$I_L = I_1 + I_2 + I_3 + I_4$$

Drag Force

$$I_D = I_D$$

Lateral Force

$$I_{LAT} = (I_3 + I_4) - (I_1 + I_2)$$

Pitching Moment

$$I_{PM} = (I_2 + I_4) - (I_1 + I_3)$$

Yawing Moment

$$I_{YM} = (I_1 + I_4) - (I_2 + I_3)$$

A considerable amount of interaction exists between the various components of the system. To illustrate these interactions, the effect of drag and lift force is shown in Figs. 29 and 30. With no drag force a lift current of 30 amp is required for a lift force of 1.5 lb. When 1 lb of drag force is applied, the current decreases slightly more than 2 amp for the same lift force. A 2-lb drag force decreases the current 5.5 amp for the given lift force. This indicates that the interactions are not a linear function but vary with the applied loads. The individual interactions can best be determined by examining the curves relative to the force in question. These interactions result, to a large degree, from the fact that saturation of the steel model core is not achieved with the present system. Although these interactions are fairly severe, usable data can be obtained by the use of equations similar to those developed by Covert and Tilton (Ref. 15). Interactions could be reduced by achieving model core saturation, or as suggested by Covert (Ref. 16), maintaining constant flux in the model.

SECTION V
CONCLUSIONS

The described system was designed, analyzed, constructed, and demonstrated to be a workable system (Figs. 34 and 35), capable of integration into a 12-in.-diam wind tunnel. The value of this particular magnetic suspension system as a force measuring system is doubtful because of considerable interactions which would make it difficult to reduce the force data. Further theoretical and experimental investigations are required before model force data could be extracted with certainty and to the degree of accuracy required. However, lesser refined magnetic suspension systems could be more quickly designed for applications such as wake studies, missile staging, and base pressure measurements. It is also possible that a highly refined magnetic suspension system could yield data concerning the model's aerodynamic damping derivatives.

The prototype suspension system described in this report by no means represents the present state-of-the-art as it was largely designed in 1959. More applicable electronic devices, advances in control system technology, and experience gained with the prototype system bring to light a number of considerations that should be seriously investigated, depending on the application, if future suspension systems were to be designed. Among these considerations are:

1. Laminated electromagnet cores
2. Water-cooled magnet and solenoid coils
3. All control coils - no bias coils
4. Solid-state power supply and control circuits
5. High current, low voltage coils
6. More rigid model detection system
7. Suspension system utilizing constant flux in the model.

REFERENCES

1. Clemens, P. L. "Radio Telemetry of Stagnation Pressures from a Wind Tunnel Model Magnetically Supported in Supersonic Flow." AIEE CP 62-1209, AIEE Summer General Meeting, Denver, Colorado, June 17-22, 1962. Also AEDC-TDR-62-141 (AD278159), July 1962.

2. Tournier, M. and Laurenceau, P. "Suspension Magnetique d'une Marquette en Soufflerie." (Magnetic Suspension of a Model in a Wind Tunnel). La Recherche Aeronautique, No. 59, Office National d'Etudes et de Recherches Aeronautiques, Paris, France, July-August 1957, p. 21.

3. Tournier, M., Laurenceau, P., and Dubois, G. "La Suspension Magnetique O. N. E. R. A." (The ONERA Magnetic Suspension System). Conference de Premier Symposium International sur l'Aerodynamique et l'Aerothermique des Gas Rarefies, Nice, France, July 2-5, 1958. Office National d'Etudes et de Recherches Aeronautiques, Chattillon-sous-Bagneux (Seine), Paris, France. Permagon Press.

4. Mirande, J. "Mesure de la Resistance d'un Corps de Revolution, a M_0 = 2.4, au Moyen de la Suspension Magnetique O. N. E. R. A." (Measurement of the Drag of a Body of Revolution, at M = 2.4, by Means of the ONERA Magnetic Suspension System). La Recherche Aeronautique, No. 70, Office National d'Etudes et de Recherches Aeronautique, Paris, France, May-June 1959, p. 24.

5. Dubois, G. and Rogue C. "Sur une Methode de Mesure de la Pression de Culot." (On a Method for Measurement of Base Pressure; Measurement and Visualization on a Cone Cylinder Magnetically Suspended at M_0 = 7.6). La Recherche Aeronautique, No. 79, Office National d'Etudes et de Recherches Aeronautiques, Paris, France, November-December 1960.

6. Beaussier, J. "Telemesure pour Maquette Suspendu Magnetiquement en Soufflerie." (Telemetry for a Model Magnetically Suspended in a Wind Tunnel). La Recherche Aeronautique, No. 82, Office National d'Etudes et de Recherches Aeronautiques, Paris, France, May-June 1961, p. 49.

7. Chrisinger, John E. "An Investigation of the Engineering Aspects of a Wind Tunnel Magnetic Suspension System." MIT Thesis, MIT TR 460 (AD221294), Massachusetts Institute of Technology, Cambridge, Massachusetts, May 1959.

8. Tilton, E. L., III, Parkin, W. J., Covert, E. E., Coffin, J. B., and Chrisinger, J. E. "The Design and Initial Operation of a Magnetic Model Suspension and Force Measuring System." Report No. ARL-63-16, August 1962.

9. Parker, H. M. and Kuhlthau, A. R. "A Magnetic Wind Tunnel Balance." Report No. AFOSR-64-0567, University of Virginia, Charlottesville, Virginia, February 1964.

10. Zapata, R. N. and Dukes, T. "An Electromagnetic Suspension System for Spherical Models in a Hypersonic Wind Tunnel." Report No. 682, Gas Dynamics Laboratory, Princeton University, Princeton, New Jersey, July 1964.

11. Geary, P. J. Magnetic and Electric Suspensions. British Scientific Instrument Research Association, 1964.

12. Clemens, P. L. and Cortner, A. H. "Bibliography: The Magnetic Suspension of Wind Tunnel Models." AEDC-TDR-63-20 (AD296400), February 1963.

13. Holmes, F. T. "Axial Magnetic Suspension." The Review of Scientific Instruments, Vol. 8, December 1937, pp. 444-447.

14. Tilton, E. L., III. "Design, Construction, and Testing of an Automatic Control System for a Wind Tunnel Magnetic Suspension System." Thesis, Massachusetts Institute of Technology, Cambridge, Massachusetts, May 1960.

15. Covert, E. E. and Tilton, E. L., III. "Calibration of a Magnetic Balance System for Drag, Lift, and Pitching Moment." Massachusetts Institute of Technology, Aerophysics Laboratory, Cambridge, Massachusetts, May 1963.

16. Copeland, A. B., Covert, E. E., and Stephens, T. "Recent Advances in the Development of a Magnetic Suspension and Balance System for Wind Tunnels (Part III)." Report No. ARL-65-114, June 1965.

BIBLIOGRAPHY
PART I
MAGNETIC SUSPENSION FOR AERODYNAMIC TESTING

Baron, L. A. "The Design and Construction of an Automatic Control System for a Wind-Tunnel Magnetic Suspension System." MIT Thesis, Massachusetts Institute of Technology, Cambridge, Massachusetts, June 1960.

Chrisinger, J. E. "An Investigation of the Engineering Aspects of a Wind Tunnel Magnetic Suspension System." MIT Thesis, MIT TR 460, (AD221294), Massachusetts Institute of Technology, Cambridge, Massachusetts, May 1959.

Chrisinger, J. E., Tilton, E. L., III, Parkin, W. J., Coffin, J. G., and Covert, E. E. "Magnetic Suspension and Balance System for Wind Tunnel Application." Massachusetts Institute of Technology, Aerophysics Laboratory, Cambridge, Massachusetts, April 1962.

Chrisinger, J. E., Tilton, E. L., III, Parkin, W. J., Coffin, J. B., and Covert, E. E. "Magnetic Suspension and Balance System for Wind Tunnel Application." Journal of the Royal Aeronautical Society, Vol. 67, No. 635, November 1963, pp. 717-724.

Clemens, P. L. and Cortner, A. H. "Bibliography: The Magnetic Suspension of Wind Tunnel Models." AEDC-TDR-63-20 (AD296400), February 1963.

Copeland, A. B., Covert, E. E., and Stephens, T. "Recent Advances in the Development of a Magnetic Suspension and Balance System for Wind Tunnels (Part III)." Report No. ARL-65-114, June 1965.

Copeland, A. B. and Tilton, E. L., III. "The Design of Magnetic Models for Use in a Magnetic Suspension and Balance System for Wind Tunnels." Report No. ARL-65-113, June 1965.

Covert, E. E., Copeland, A. B., Stephens, T., and Tilton, E. L., III. "Recent Advances in the Development of a Magnetic Suspension and Balance System for Wind Tunnels (Part II)." Report No. ARL-64-36, March 1964.

Covert, E. E. and Tilton, E. L., III. "Calibration of a Magnetic Balance System for Drag, Lift, and Pitching Moment." Massachusetts Institute of Technology, Aerophysics Laboratory, Cambridge, Massachusetts, May 1963.

Covert, E. E. and Tilton, E. L., III. "Further Evaluation of a Magnetic Suspension and Balance System for Application to Wind Tunnels." Report No. ARL-63-226, December 1963.

Covert, E. E. and Tilton, E. L., III. "Recent Advances in the Development of a Magnetic Suspension and Balance System for Wind Tunnels." Report No. ARL-63-235, December 1963.

Fosque, H. S. and Miller, G. H. "An Electromagnetic Support Arrangement with Three Dimensional Control, Part II - Experimental." Report UVA/ORL-04-58-TR3, Presented at 4th Conference on Magnetism and Magnetic Materials, Philadelphia, Pennsylvania, November 17-20, 1958.

Hensel, R. W. "Recent Developments in Wind-Tunnel Testing Techniques at Transonic and Supersonic Speeds." Journal of Spacecraft and Rockets, Vol. 1, No. 5, September-October 1964, pp. 449-463. Also AEDC-TR-65-75, June 1965.

Jenkins, A. W., Jr. and Parker, H. M. "An Electromagnetic Support Arrangement with Three Dimensional Control, Part I - Theoretical." Report UVA/ORL-04-58-TR1, Presented at 4th Conference on Magnetism and Magnetic Materials, Philadelphia, Pennsylvania, November 17-20, 1958.

"Magnetic Suspension of Wind Tunnel Models." The Engineer, Vol. 210, No. 5463, October 7, 1960, pp. 607-608.

"Magnetic Suspension Replaces Mechanical Support of Wind Tunnel Models." Electronic Design News, Vol. 6, No. 7, July 1961, pp. 13-15.

Matheson, L. R. "Some Considerations for Design and Utilization of Magnetic Suspension." Aerodynamics Fundamental Memo No. 84, General Electric Missile and Space Vehicle Department, Philadelphia, Pennsylvania, May 1959.

Mirande, J. "Mesure de la Resistance d'un Corps de Revolution, a $M_0 = 2.4$, au Moyen de la Suspension Magnetique O. N. E. R. A." (Measurement of the Drag of a Body of Revolution, at M = 2.4, by Means of the ONERA Magnetic Suspension System). La Recherche Aeronautique, No. 70, Office National d'Etudes et de Recherches Aeronautique, May-June 1959, p. 24.

Nelson, W., Trachtenberg, A., and Grundy, A., Jr. "An Apparatus for the Study of High Speed Air Flow over a Freely Suspended Rotating Cylinder." WADC Technical Report 57-338 (AD142127), December 1957.

Parker, H. M., May, J. E., and Nurre, G. S. "An Electromagnetic Suspension System for the Measurement of Aerodynamic Characteristics." Report No. AST-4443-106-62U, University of Virginia, Charlottesville, Virginia, March 1962.

Parker, H. M. and Kuhlthau, A. R. "A Magnetic Wind Tunnel Balance". Report No. AFOSR-64-0567, University of Virginia, Charlottesville, Virginia, February 1964.

Scott, J. E., Jr. and May, J. E. "Laboratory Investigation of the Basic Nature of Low Density Gas Flow at High Speeds." Report No. AST-4435-109-61U, Research Laboratories for the Engineering Sciences, University of Virginia, Charlottesville, Virginia, January 1961.

Scott, J. E., Jr. and Kuhlthau, A. R. "Laboratory Investigation of the Basic Nature of Low Density Gas Flow at High Speeds." Annual Progress Report for the Period January 1 to December 31, 1961. Report No. AST-4435-116-62U, University of Virginia, Charlottesville, Virginia, February 1962.

Tilton, E. L. and Schwartz, S. "Static Test on the Magnetic Suspension System." MIT AR Memo 399, Massachusetts Institute of Technology, Naval Supersonic Laboratory, Cambridge, Massachusetts, July 1959.

Tilton, E. L., III. "Design, Construction, and Testing of an Automatic Control System for a Wind Tunnel Magnetic Suspension System." MIT Thesis, Massachusetts Institute of Technology, Cambridge, Massachusetts, May 1960.

Tilton, E. L., III, Parkin, W. J., Covert, E. E., Coffin, J. B., and Chrisinger, J. E. "The Design and Initial Operation of a Magnetic Model Suspension and Force Measurement System." Report No. ARL-63-16, August 1962.

Tournier, M. and Laurenceau, P. "Suspension Magnetique d'une Maquette en Soufflerie." (Magnetic Suspension of a Model in a Wind Tunnel). La Recherche Aeronautique, No. 59, Office National d'Etudes et de Recherches Aeronautiques, July - August 1957, p. 21.

Tournier, M., Laurenceau, P., and Dubois, G. "La Suspension Magnetique O.N.E.R.A." (The ONERA Magnetic Suspension System). Conference on Premier Symposium International sur l'Aerodynamique et l'Aerothermique des Gas Rarefies, Nice, France, July 2-5, 1958. Office National d'Etudes et de Recherches Aeronautiques, Chatillon-sous-Bagneux (Seine), Paris, France, Permagon Press.

Zapata, R. N. and Dukes, T. "An Electromagnetic Suspension System for Spherical Models in a Hypersonic Wind Tunnel." Report No. 682, Gas Dynamics Laboratory, Princeton University, Princeton, New Jersey, July 1964.

PART II
NONAERODYNAMIC APPLICATIONS OF MAGNETIC SUSPENSION

Beams, J. W., Young, J. R., III, and Moore, J. W. "The Production of High Centrifugal Fields." Journal of Applied Physics, Vol. 17, November 1946, pp. 886-890.

Beams, J. W. "Magnetic-Suspension Ultracentrifuge Circuits." Electronics, March 1954, pp. 152-155.

Beams, J. W., Spitzer, D. M., Jr., and Wade, J. P., Jr. "Spinning Rotor Pressure Gage." The Review of Scientific Instruments, Vol. 33, No. 2, February 1962, pp. 151-155.

Breazeale, J. B., McIlwraith, C. G., and Dacus, E. N. "Factors Limiting a Magnetic Suspension System." Journal of Applied Physics, Vol. 29, No. 3, March 1958, pp. 414-415.

Carpenter, D. R., Jr. "A New Equilibrium Ultracentrifuge for Determination of Molecular Weights." A dissertation presented to the graduate faculty of the University of Virginia in candidacy for the degree of Doctor of Philosophy, June 1957. Available from University Microfilms, Inc., Ann Arbor, Michigan, 1960.

Davisson, C. J. and Beams, J. W. "A New Variation of the Rotation-by-Magnetization Method of Measuring Gyromagnetic Ratios." Review of Modern Physics, Vol. 25, No. 1, January 1953, pp. 246-252.

Geary, P. J. Magnetic and Electric Suspensions. British Scientific Instrument Research Association, 1964.

Gilpin, B. J., Neiman, D. F., Moss, F. E., Jr., Ging, L., and McVey, E. S. "Investigation of Magnetic and Electric Forces for Rotating Shaft Suspension." Report No. EMI-4441-117-62U, ASD-TDR-62-441 (AD277202), May 1962.

Gilpin, B. J. "Research Investigation of Magnetic and Electric Forces for Rotating Shaft Suspension." Report No. EMI-4454-103-62U (AD277753), June 1962. Research Laboratories for the Engineering Sciences, University of Virginia, Charlottesville, Virginia.

Holmes, F. T. "Axial Magnetic Suspension." The Review of Scientific Instruments, Vol. 8, December 1937, pp. 444-447.

McIlwraith, G. C., Breazeale, J. B., and Dacus, E. N. "Improved Magnetic Suspension System." The Review of Scientific Instruments, Vol. 29, No. 11, November 1958, pp. 1029-1033.

Okress, E. C., Wroughton, D. M., Comenetz, G., Brace, P. H., and Kelly, J. C. R. "Electromagnetic Levitation of Solid and Molten Metals." Journal of Applied Physics, Vol. 23, No. 5, May 1952, p. 545.

"Rotor Floats in Magnetic Field." Electronics, Vol. 36, No. 9, March 1, 1963, p. 50.

Schreiber, H. "Photomagnetic Toy is True Servomechanism." Radio-Electronics, January 1962, pp. 79-80.

Sessoms, O. Van P., III and Bailey, T. W., Lt. "An Electronically Controlled High Speed Streak Camera." Report No. ASD-TDR-62-596, July 1962.

Wroughton, D. M., Okress, E. C., Brace, P. H., Comenetz, G., and Kelly, J. C. R. "A Technique for Eliminating Crucibles in Heating and Melting of Metals." Journal of the Electromechanical Society, Vol. 99, No. 5, May 1952, p. 205.

PART III
TELEMETRY FROM MAGNETICALLY SUSPENDED AERODYNAMIC MODELS

Beaussier, J. "Telemesure pour Maquette Suspendu Magnetiquement en Soufflerie." (Telemetry for a Model Magnetically Suspended in a Wind Tunnel). La Recherche Aeronautique, No. 82, Office National d'Etudes et de Recherches Aeronautiques, Paris, France, May-June 1961, p. 49.

Clemens, P. L. "Radio Telemetry of Stagnation Pressures from a Wind Tunnel Model Magnetically Supported in Supersonic Flow." AIEE CP 62-1209, AIEE Summer General Meeting, Denver, Colorado, June 17-22, 1962. Also AEDC-TDR-62-141 (AD278159), July 1962.

Dubois, G. and Rogue C. "Sur une Methode de Mesure de la Pression de Culot." (On a Method for Measurement of Base Pressure; Measurement and Visualization on a Cone Cylinder Magnetically Suspended at $M_0 = 7.6$). La Recherche Aeronautique, No. 79, Office National d'Etudes et de Recherches Aeronautiques, Paris, France, November-December 1960.

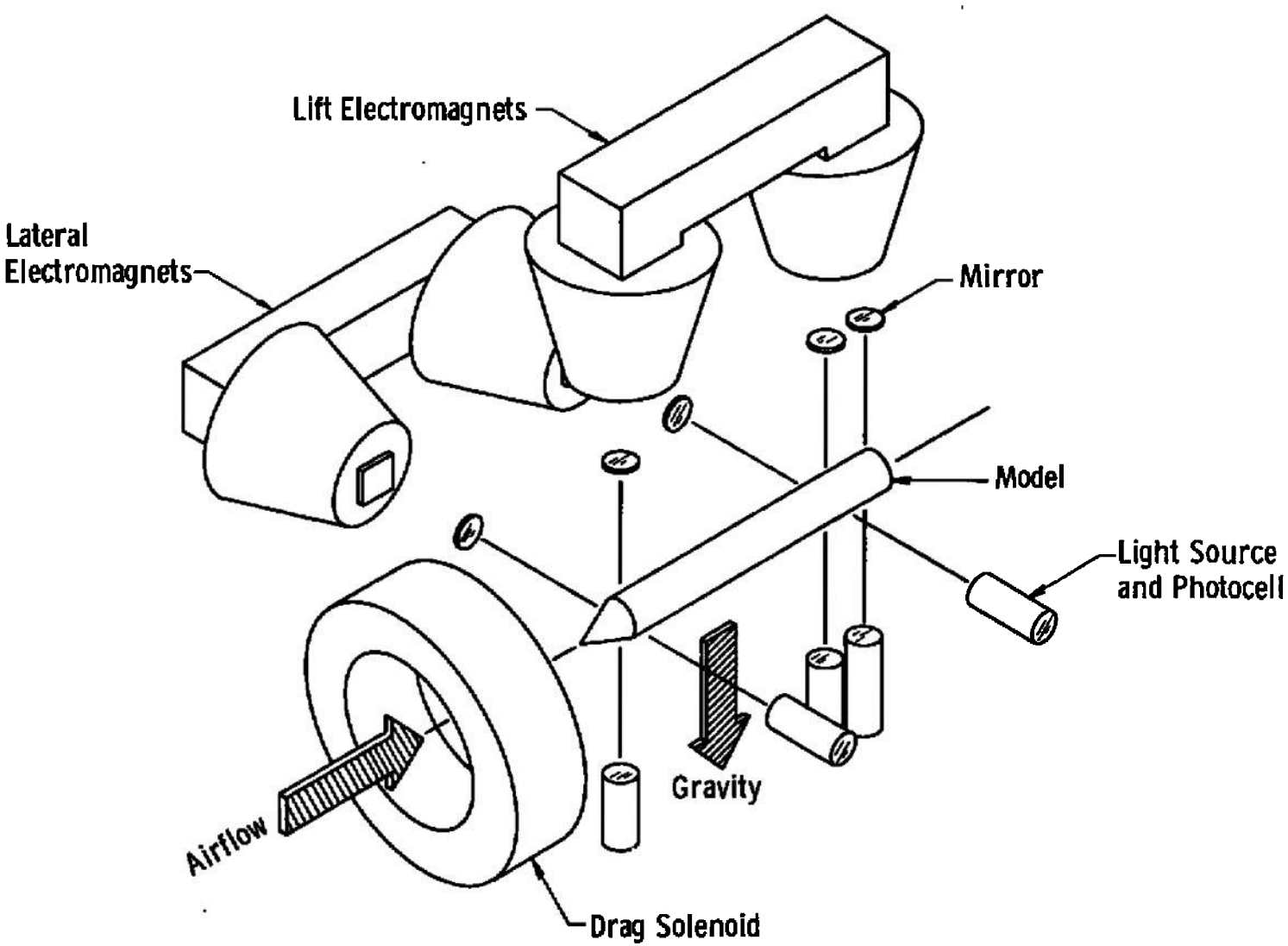

Fig. 1 Basic L Configuration Magnetic Suspension System

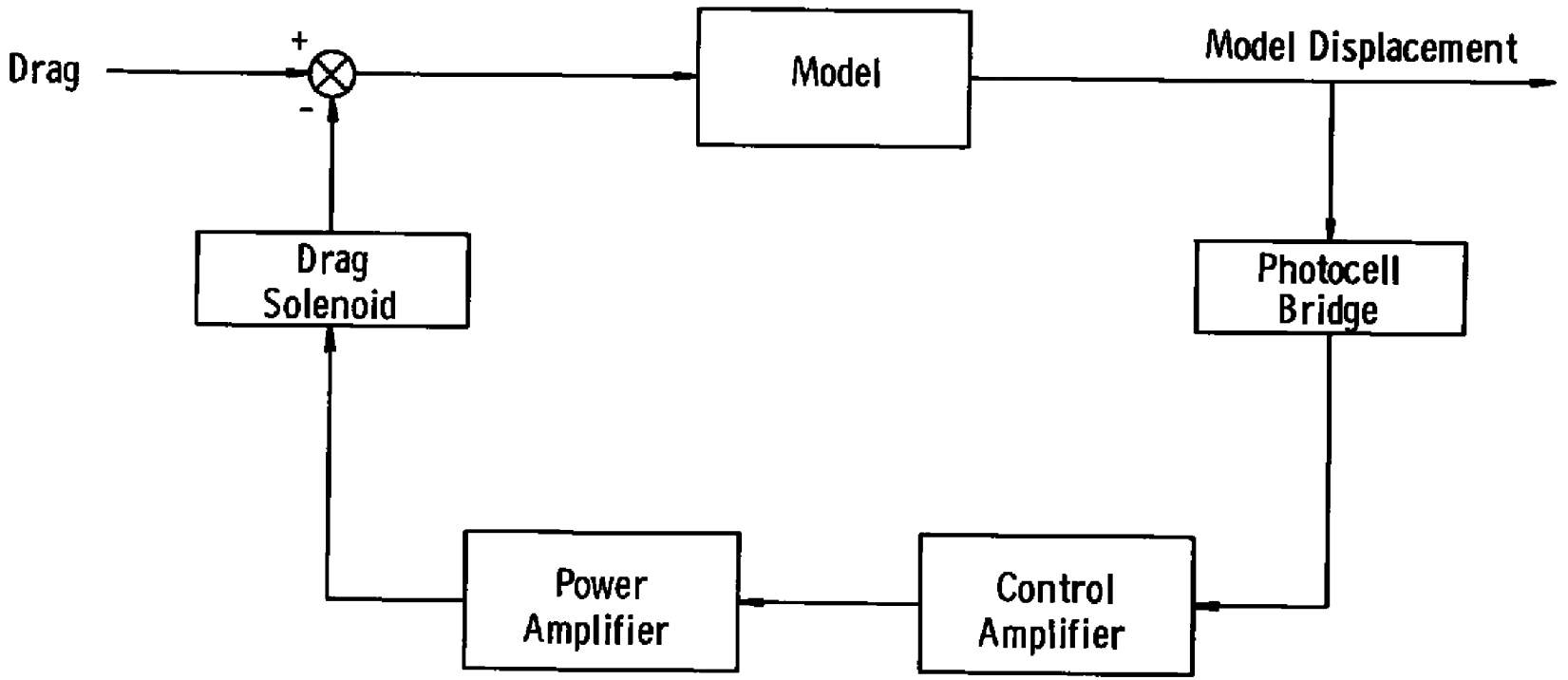

Fig. 2 Typical Drag System Block Diagram

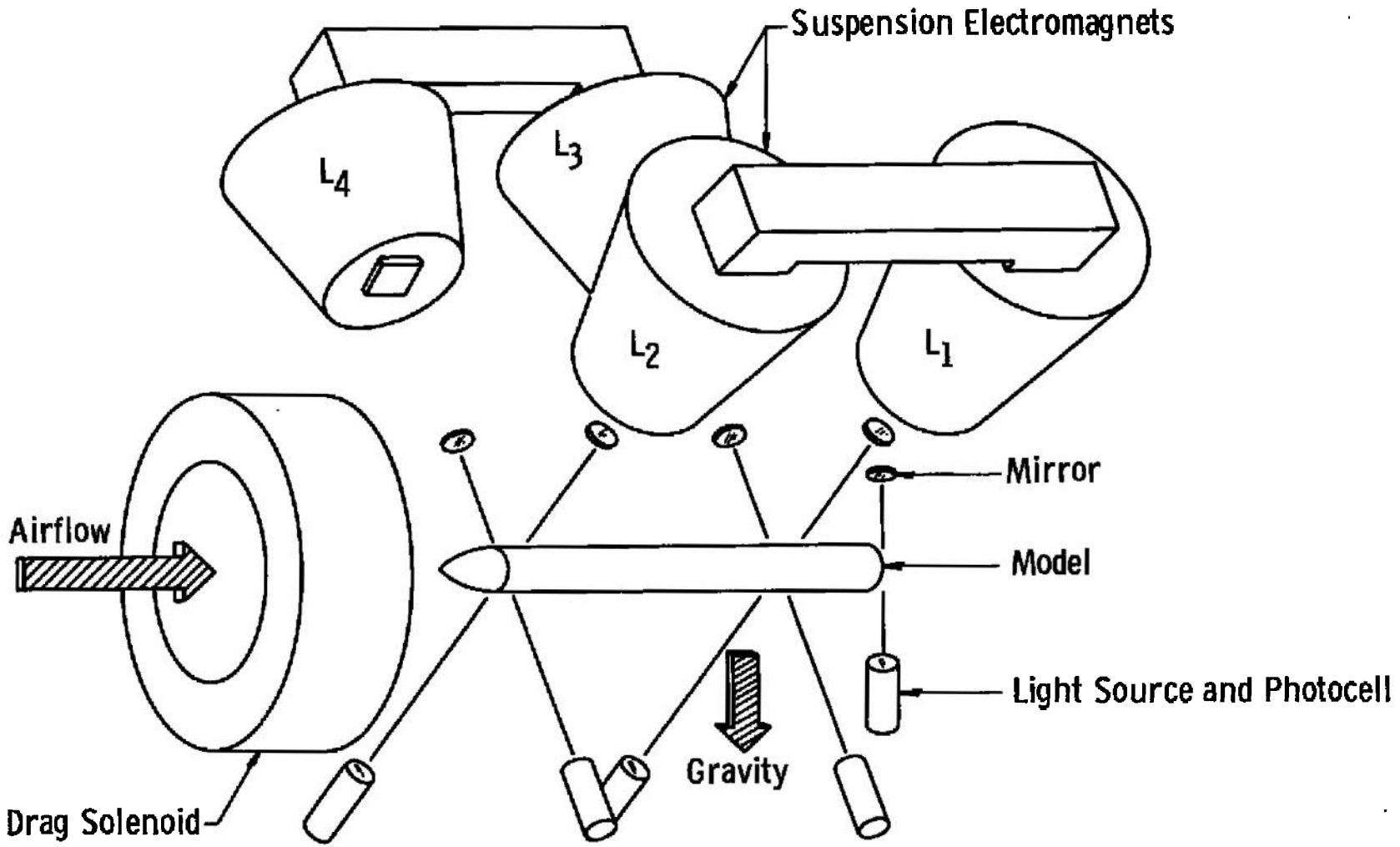

Fig. 3 Basic V Configuration Magnetic Suspension System

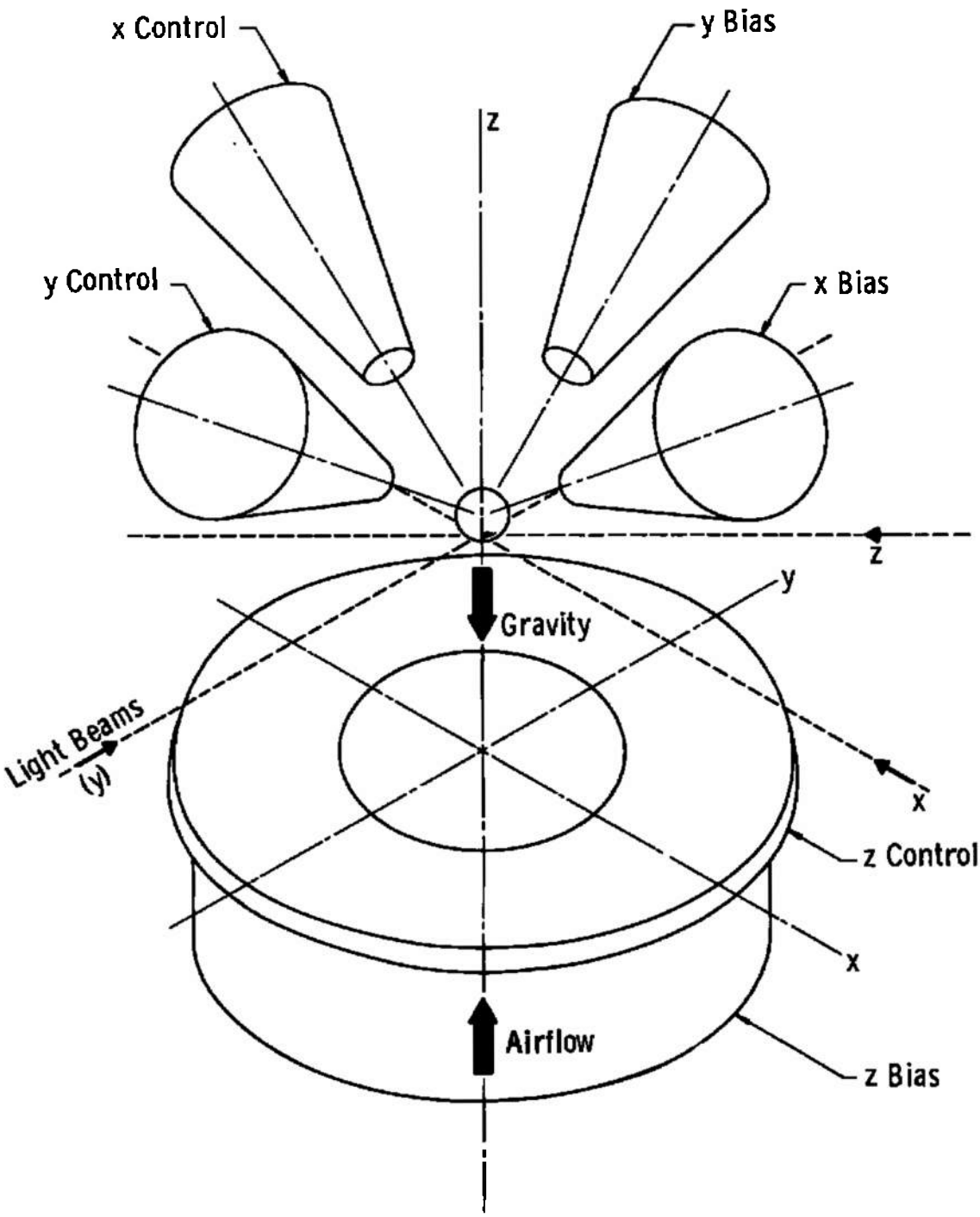

Fig. 4 Basic Three-Degrees-of-Freedom Configuration Magnetic Suspension System

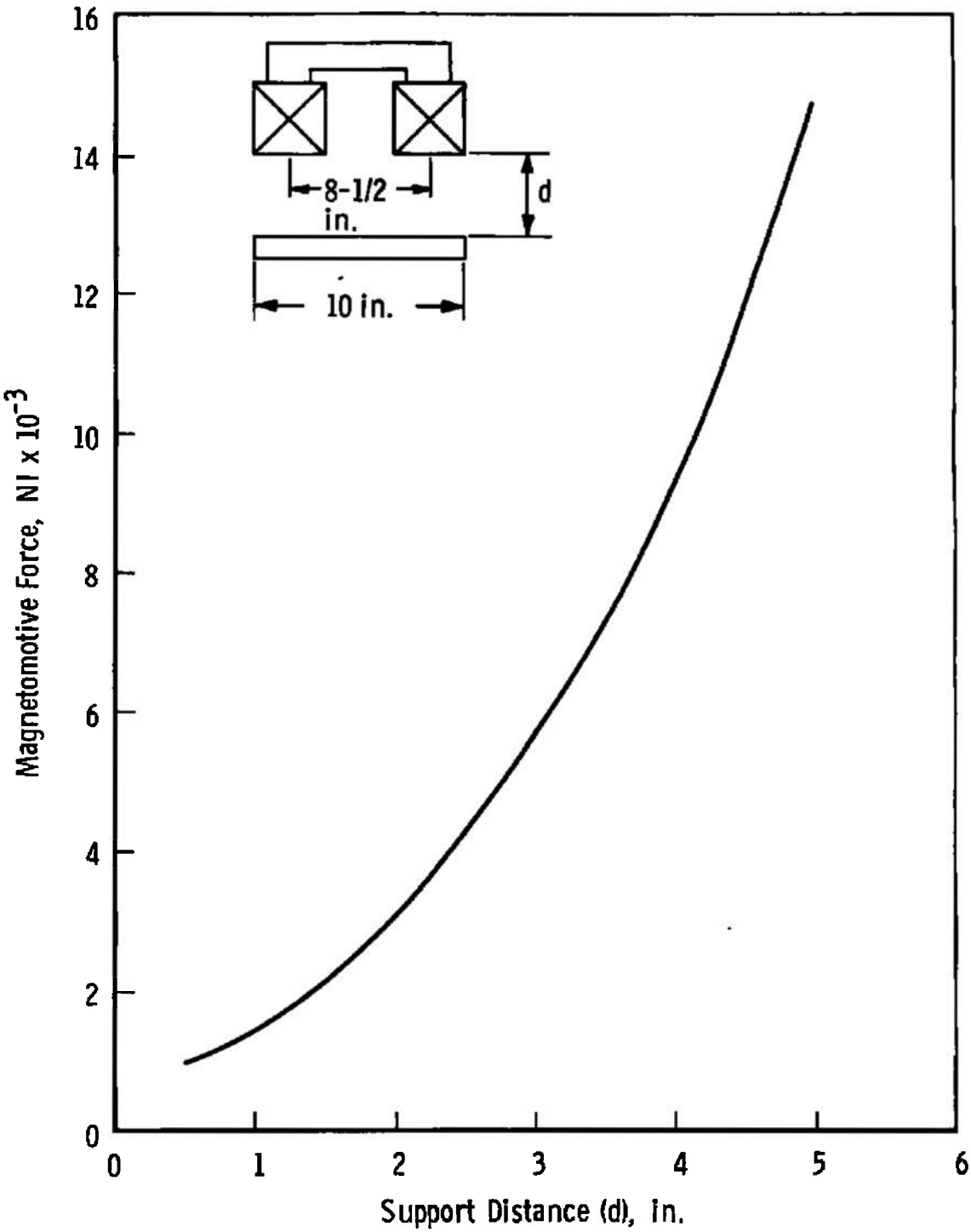

Fig. 5 Magnetomotive Force versus Support Distance for a Suspended 10- by 0.75- by 0.25-in. Iron Bar

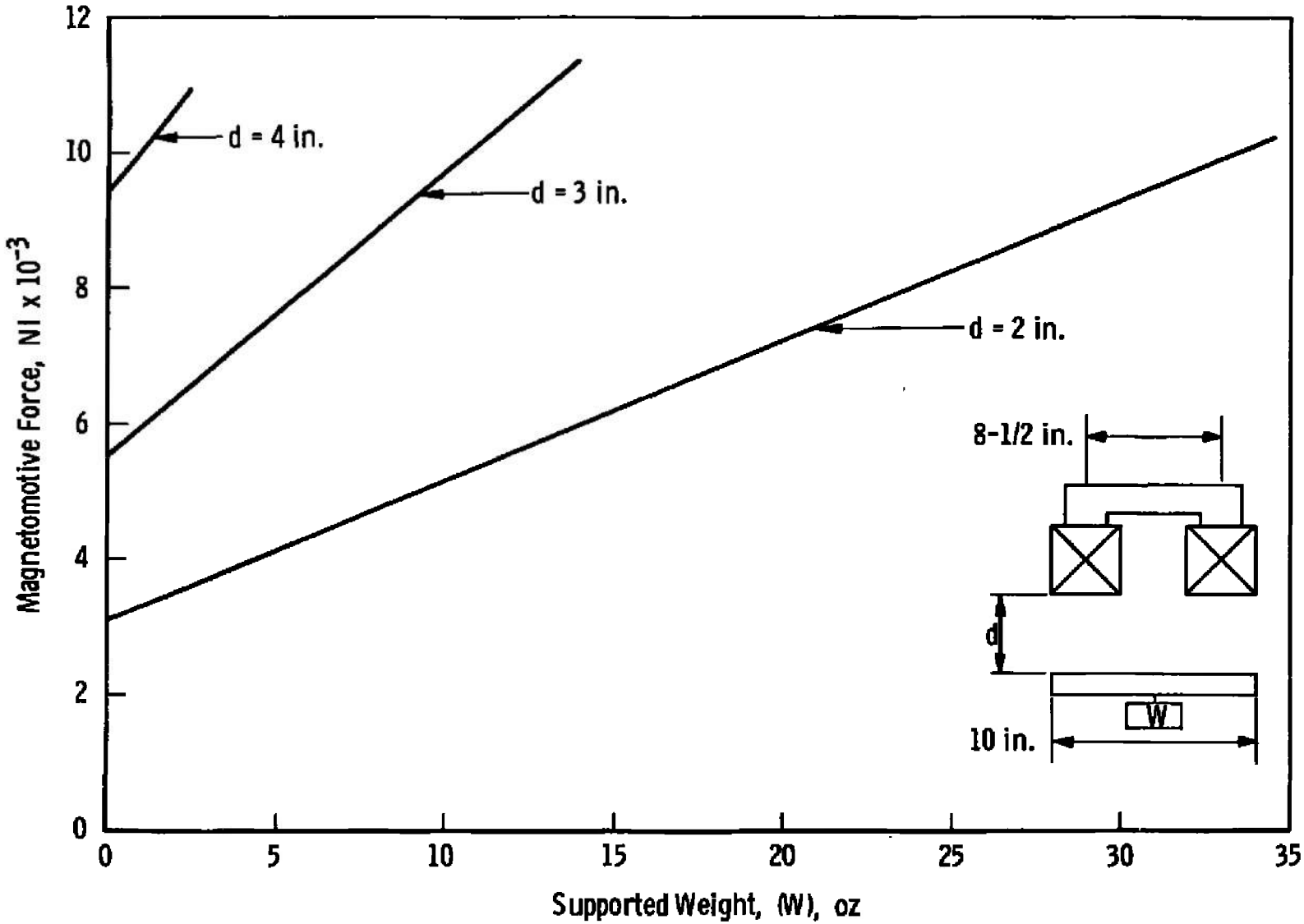

Fig. 6 Magnetomotive Force versus Supported Weight for Various Support Distances

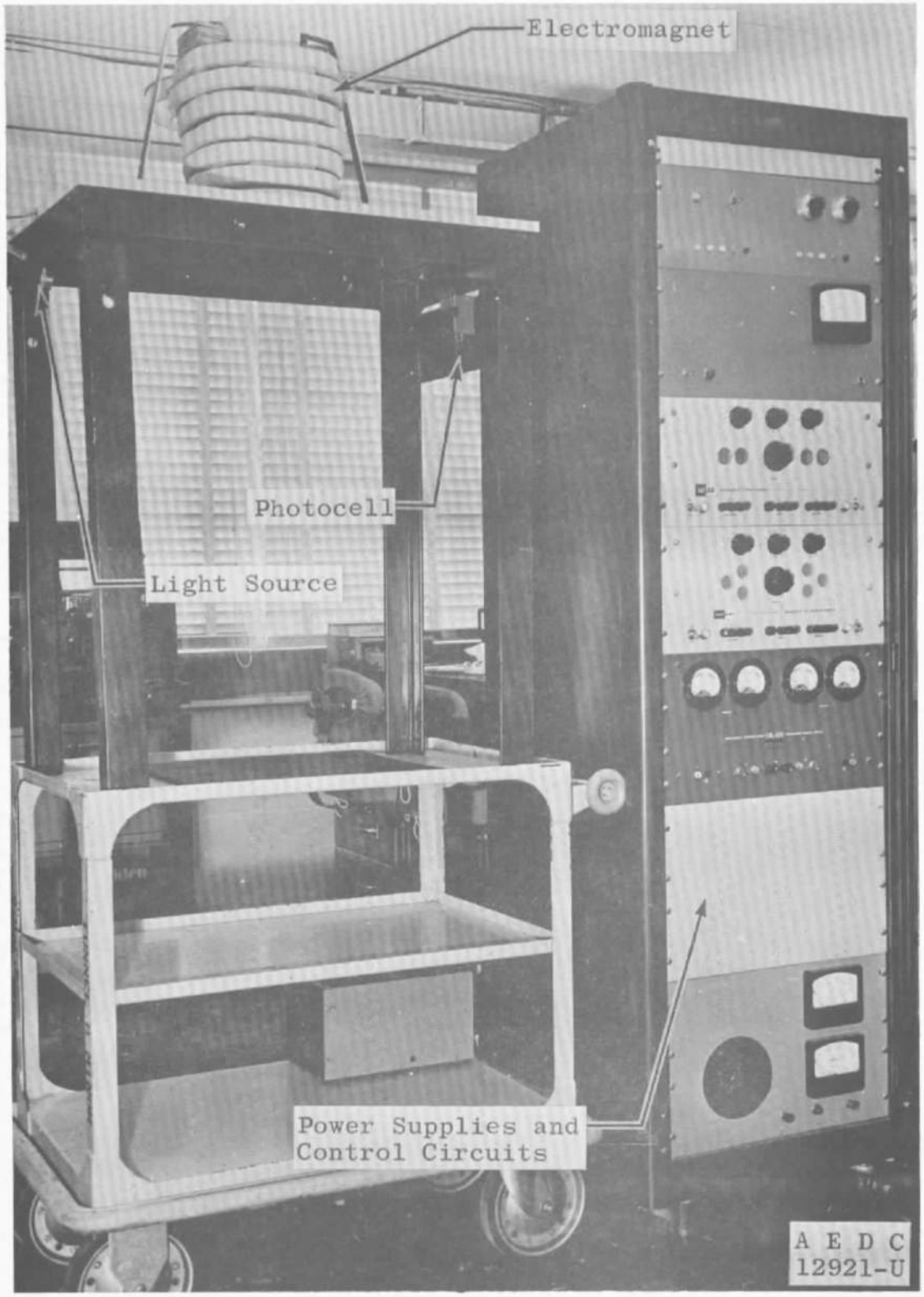

Fig. 7 Experimental Single Axis Prototype of Magnetic Suspension System

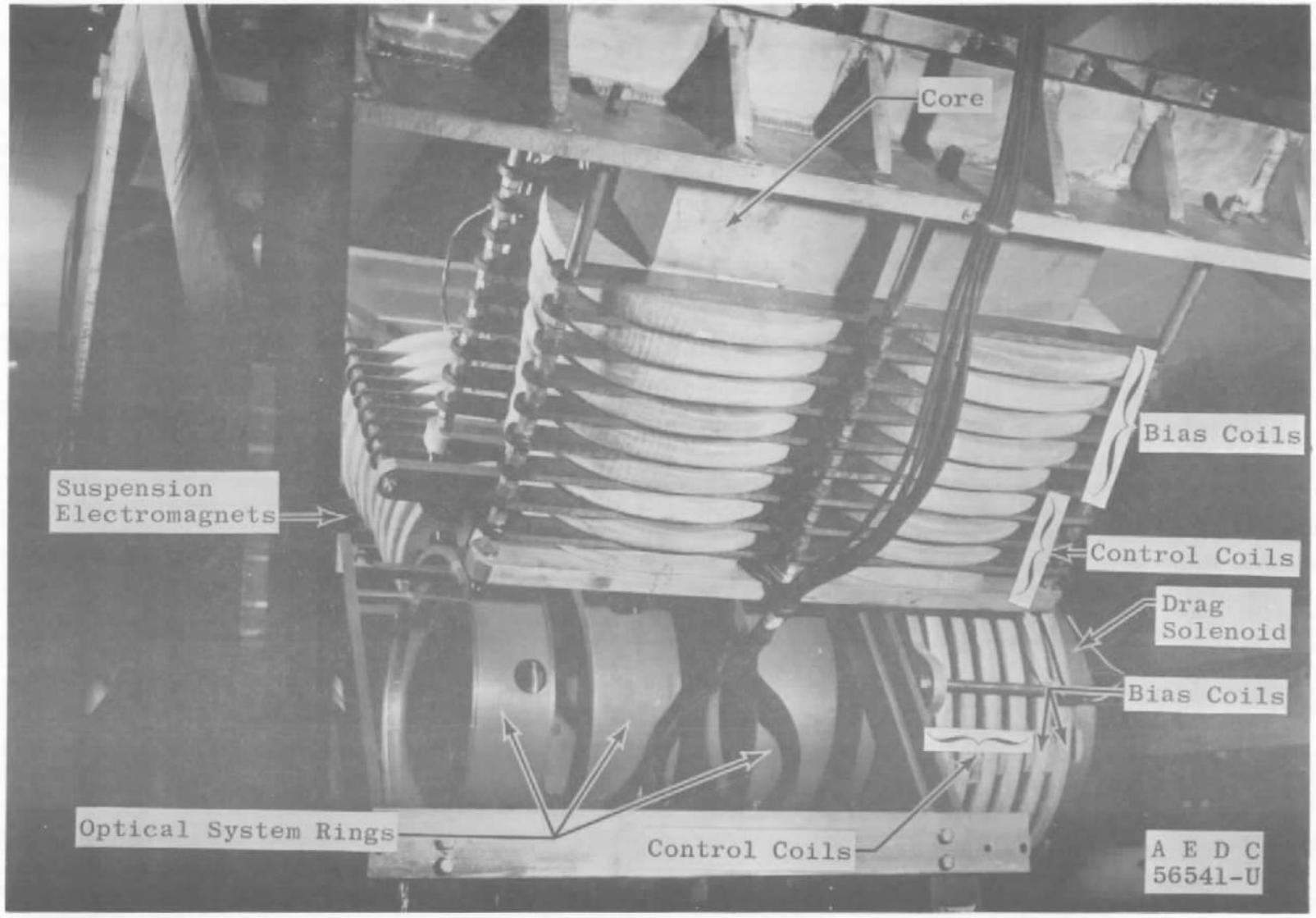

Fig. 8 Magnetic Suspension System, Side View

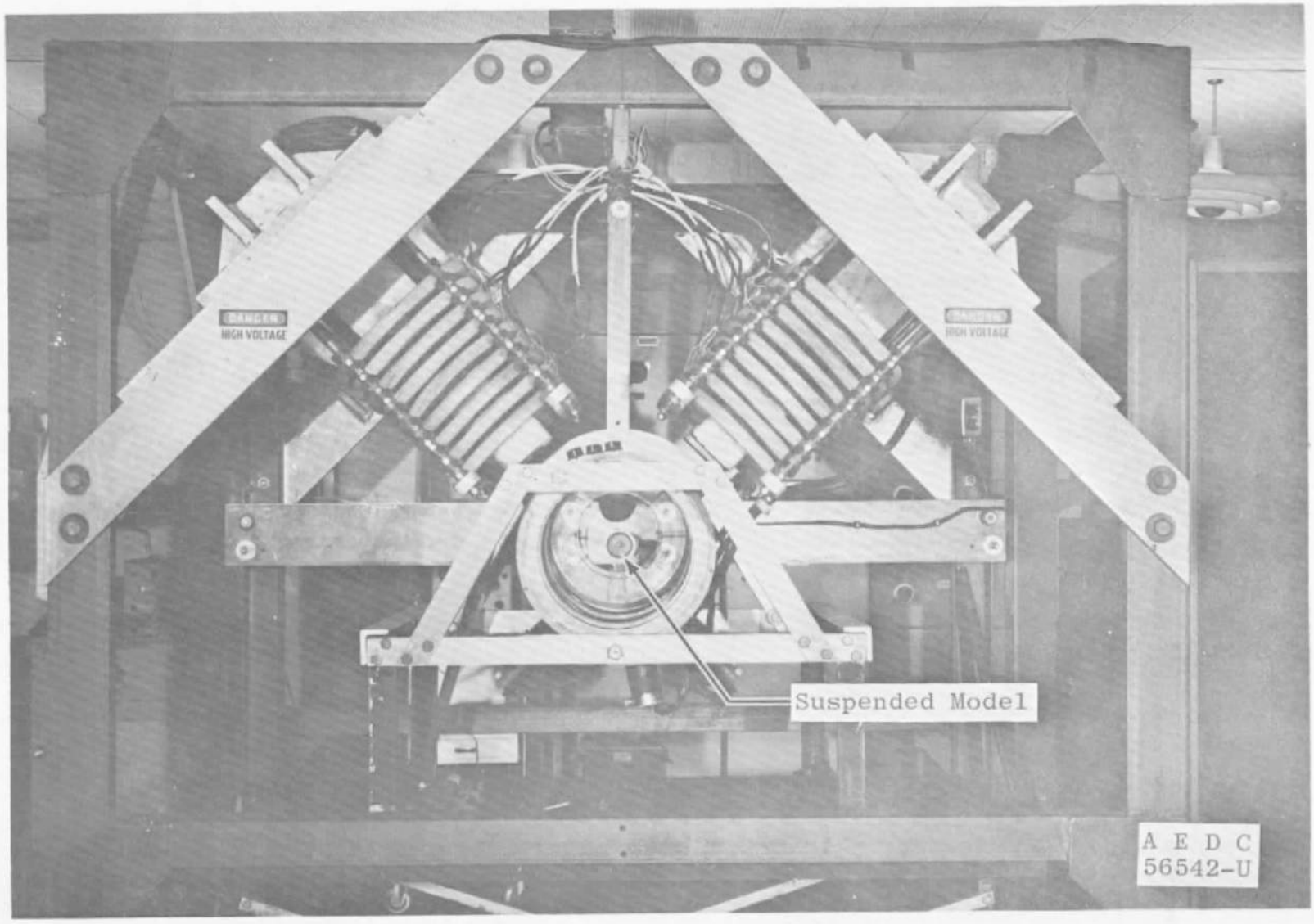

Fig. 9 Magnetic Suspension System, End View

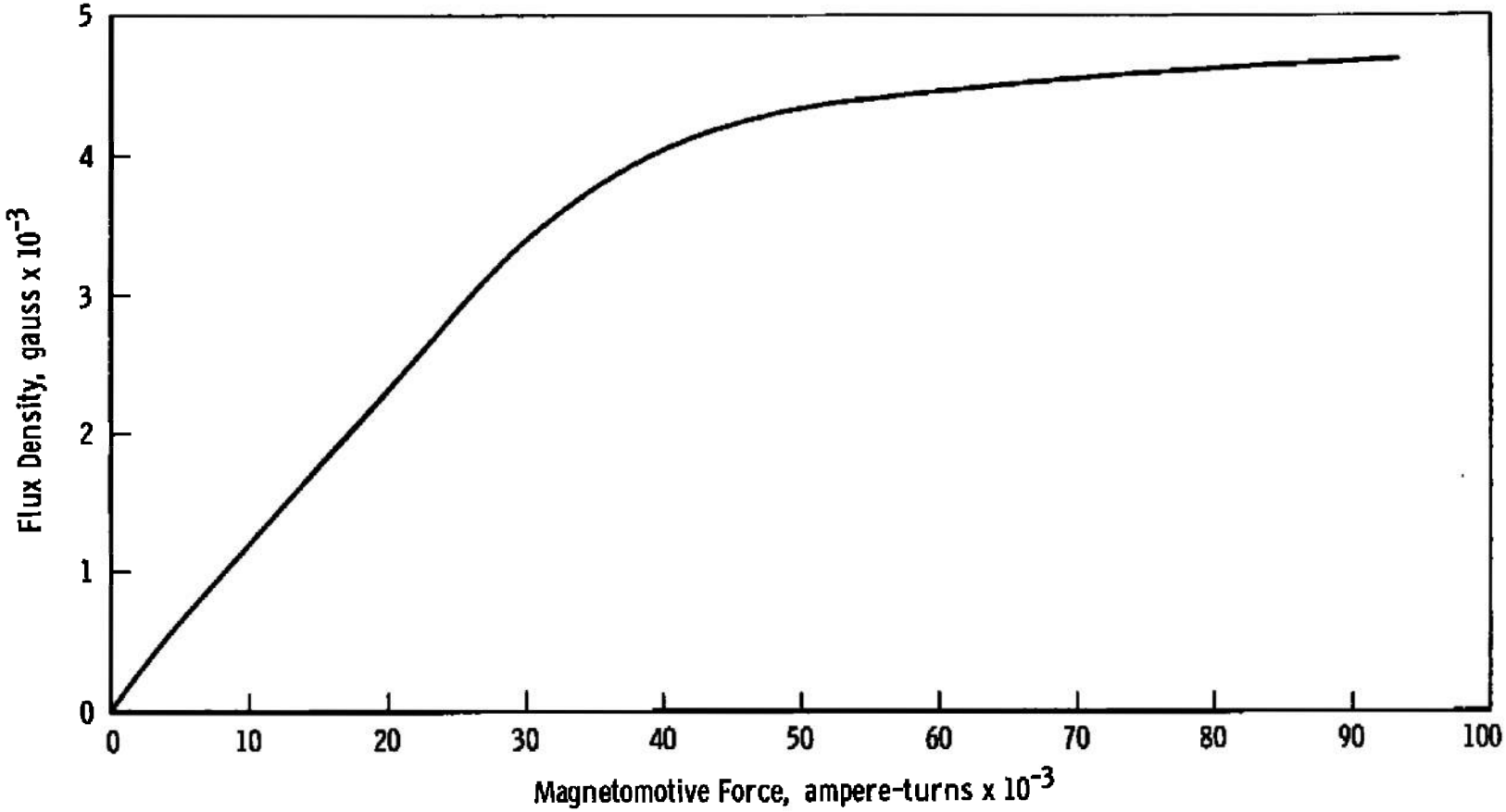

Fig. 10 Magnetization Curve for One Pole of a Suspension Electromagnet

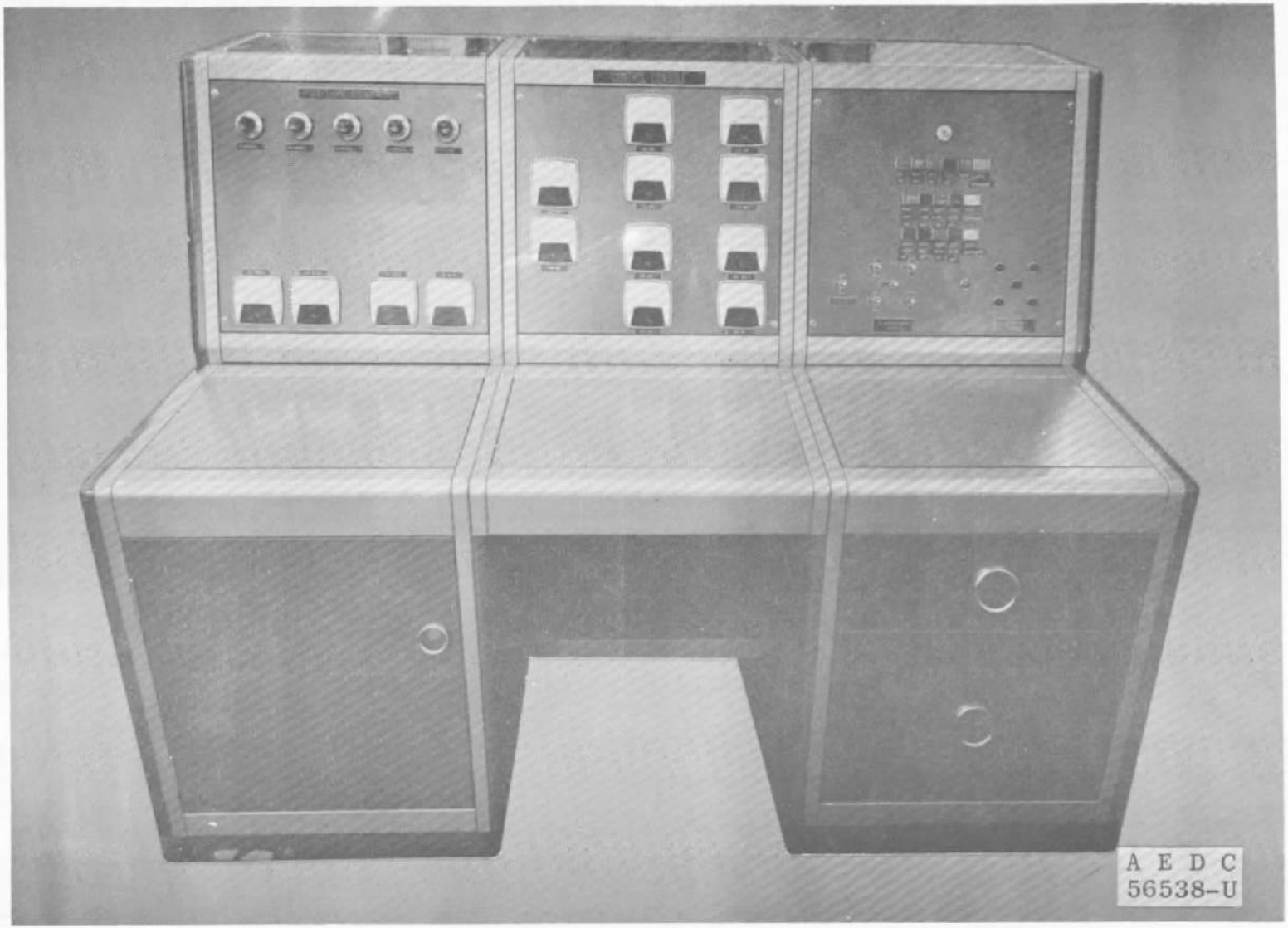

Fig. 11 Operating Console

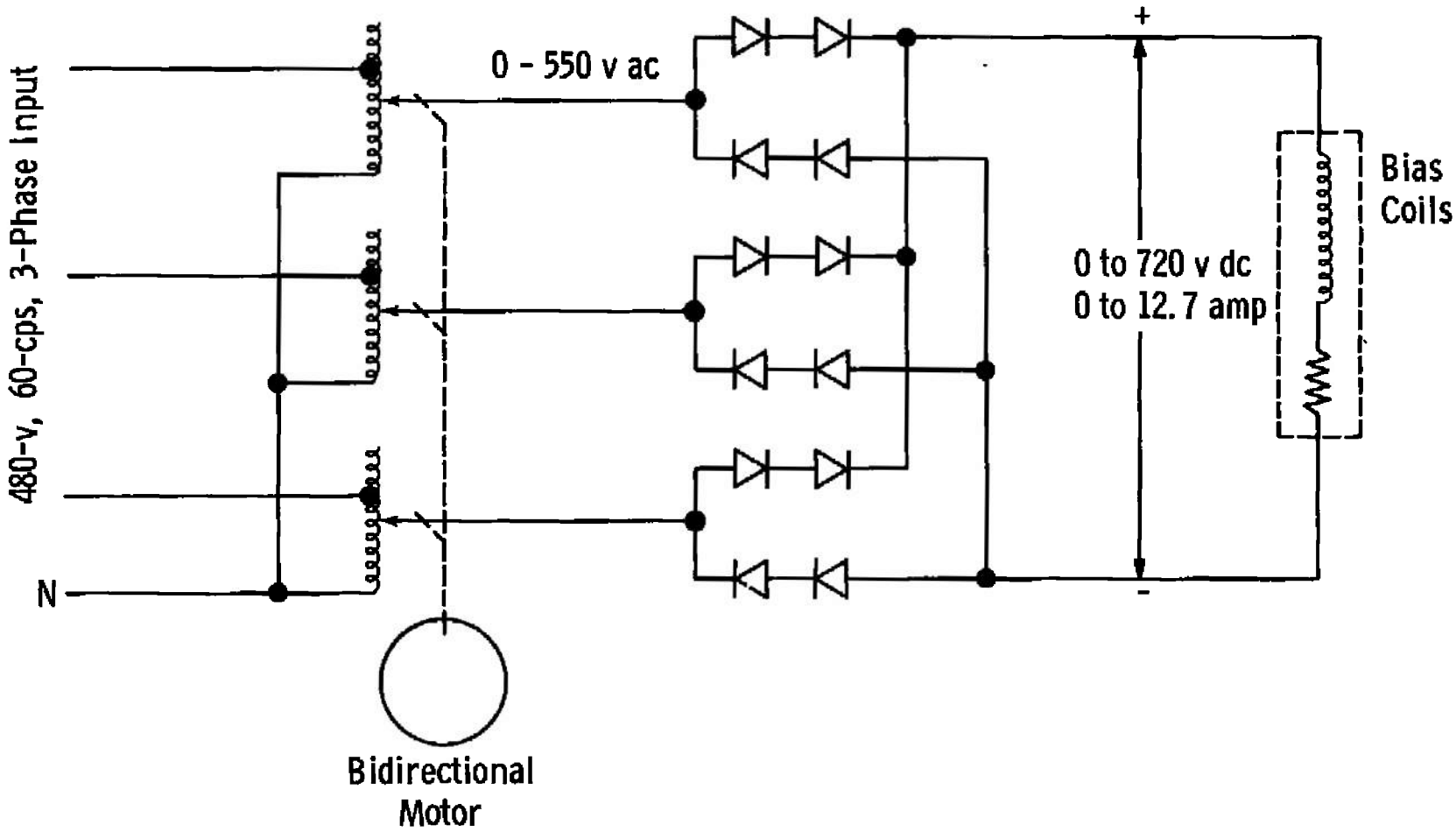

Fig. 12 Schematic Diagram of Bias Coil Power Supply

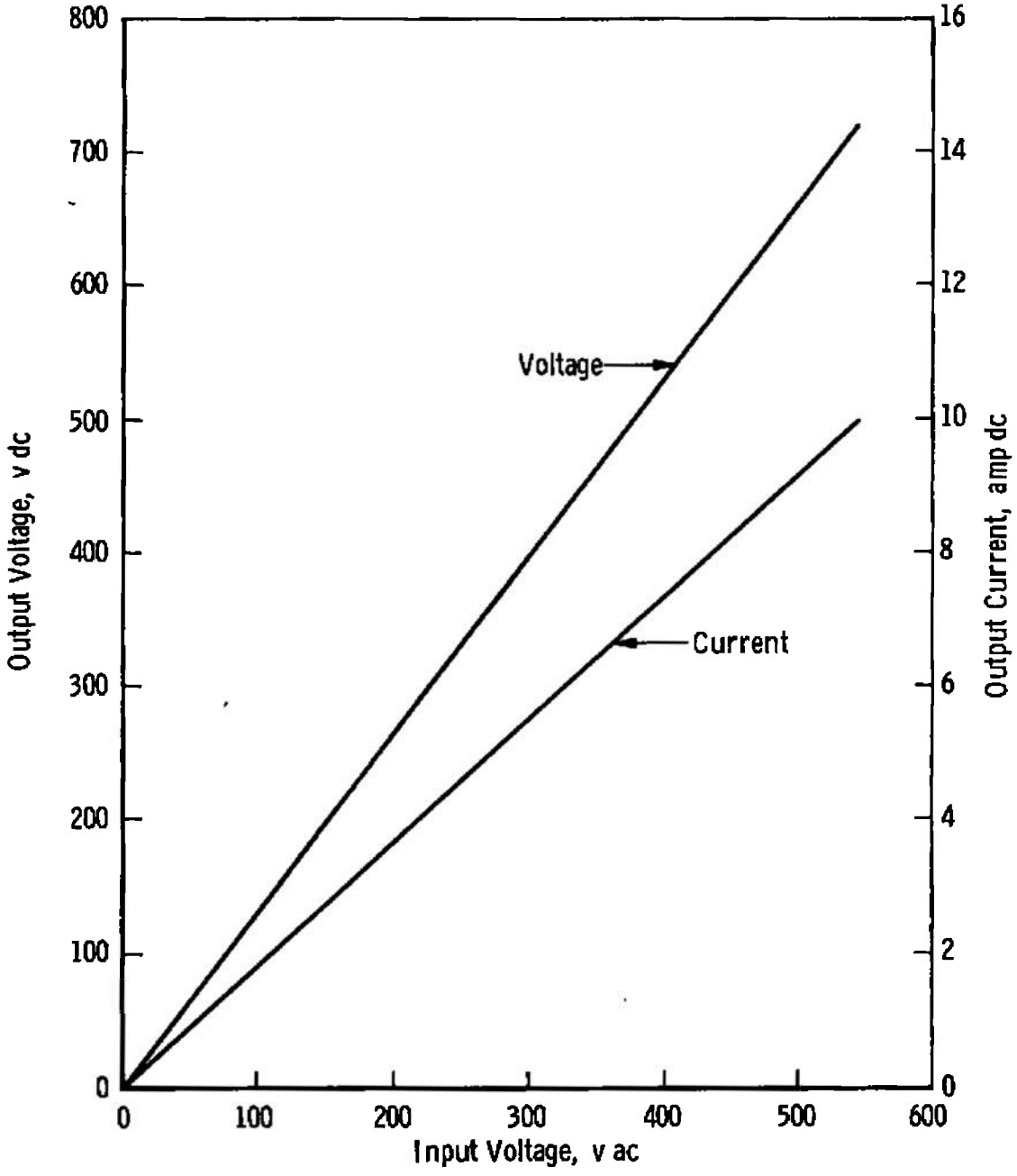

Fig. 13 Output Characteristics of Bias Coil Power Supply Connected to Electromagnet Circuit

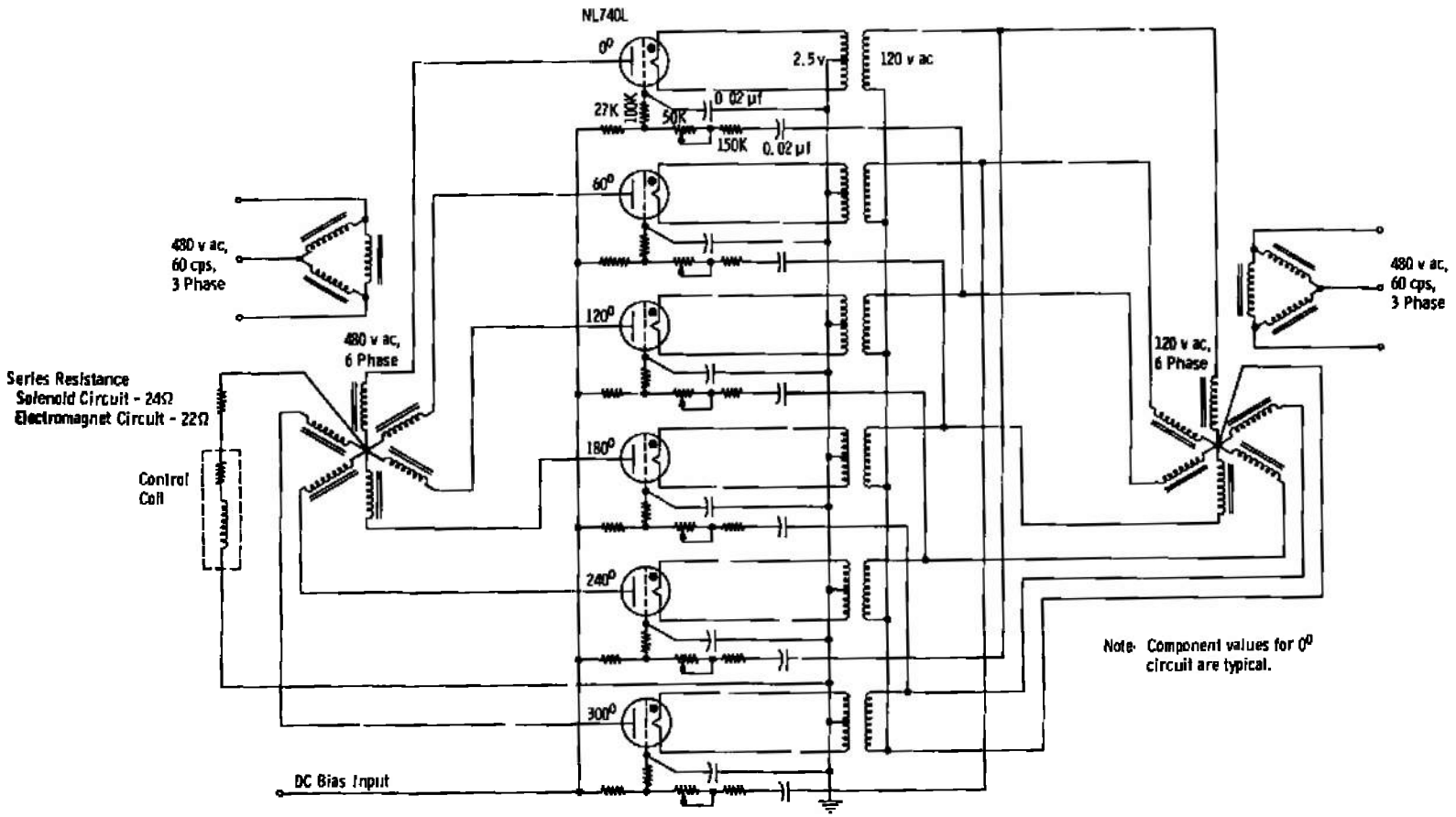

Fig. 14 Schematic Diagram of Control Coil Power Supply

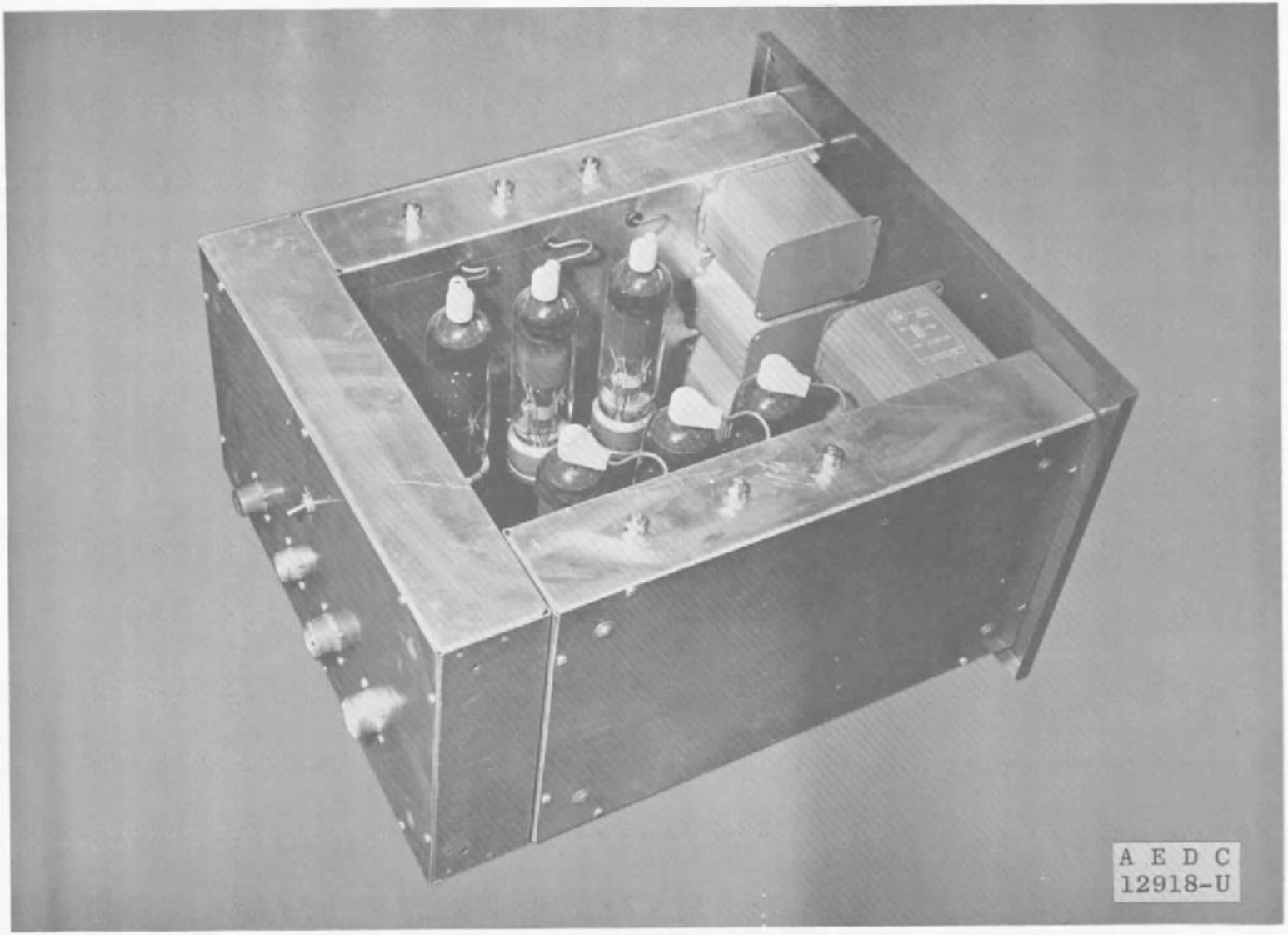

Fig. 15 Control Coil Power Supply

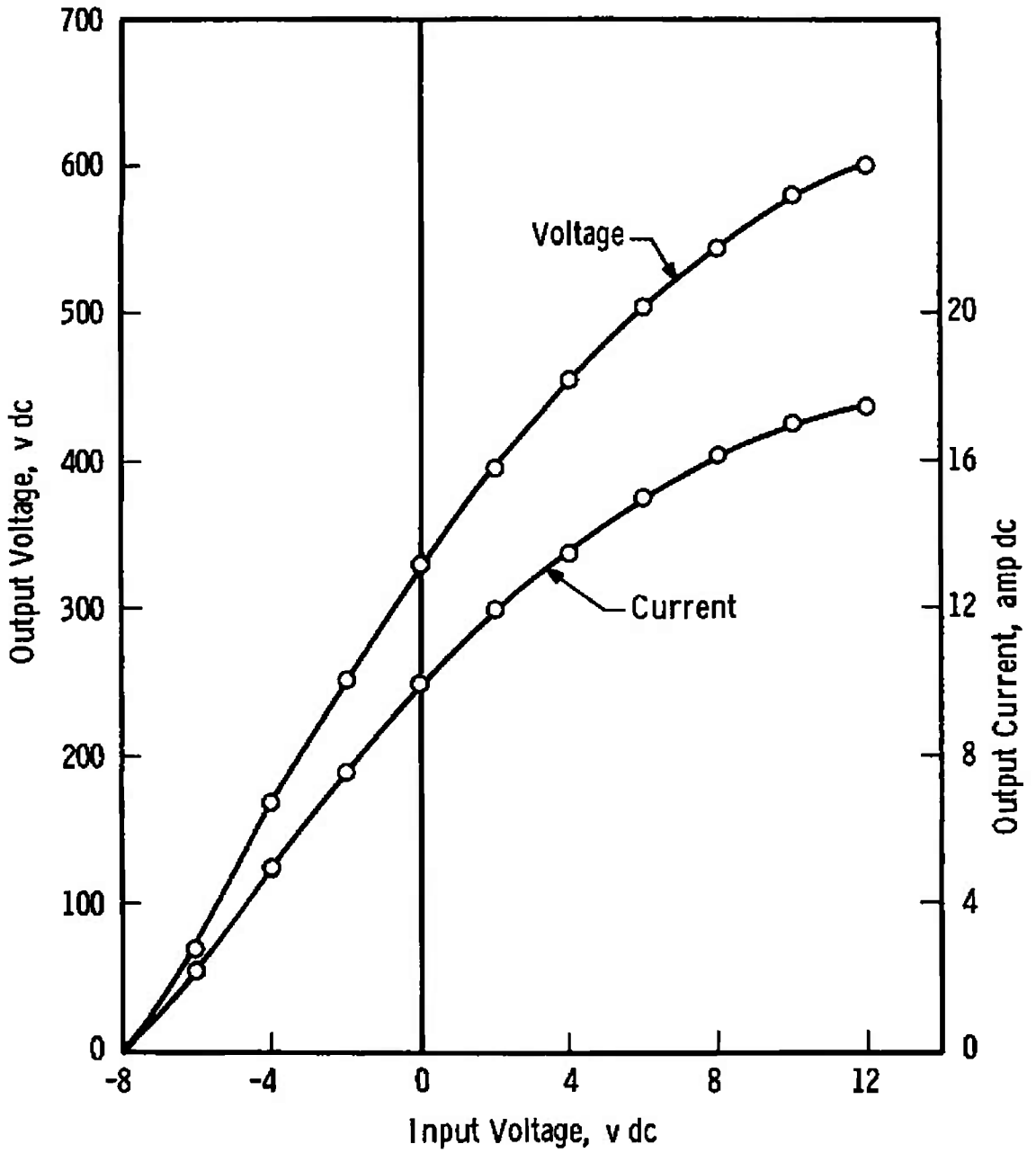

Fig. 16 Output Characteristics of Control Coil Power Supply Connected to Electromagnet Circuit

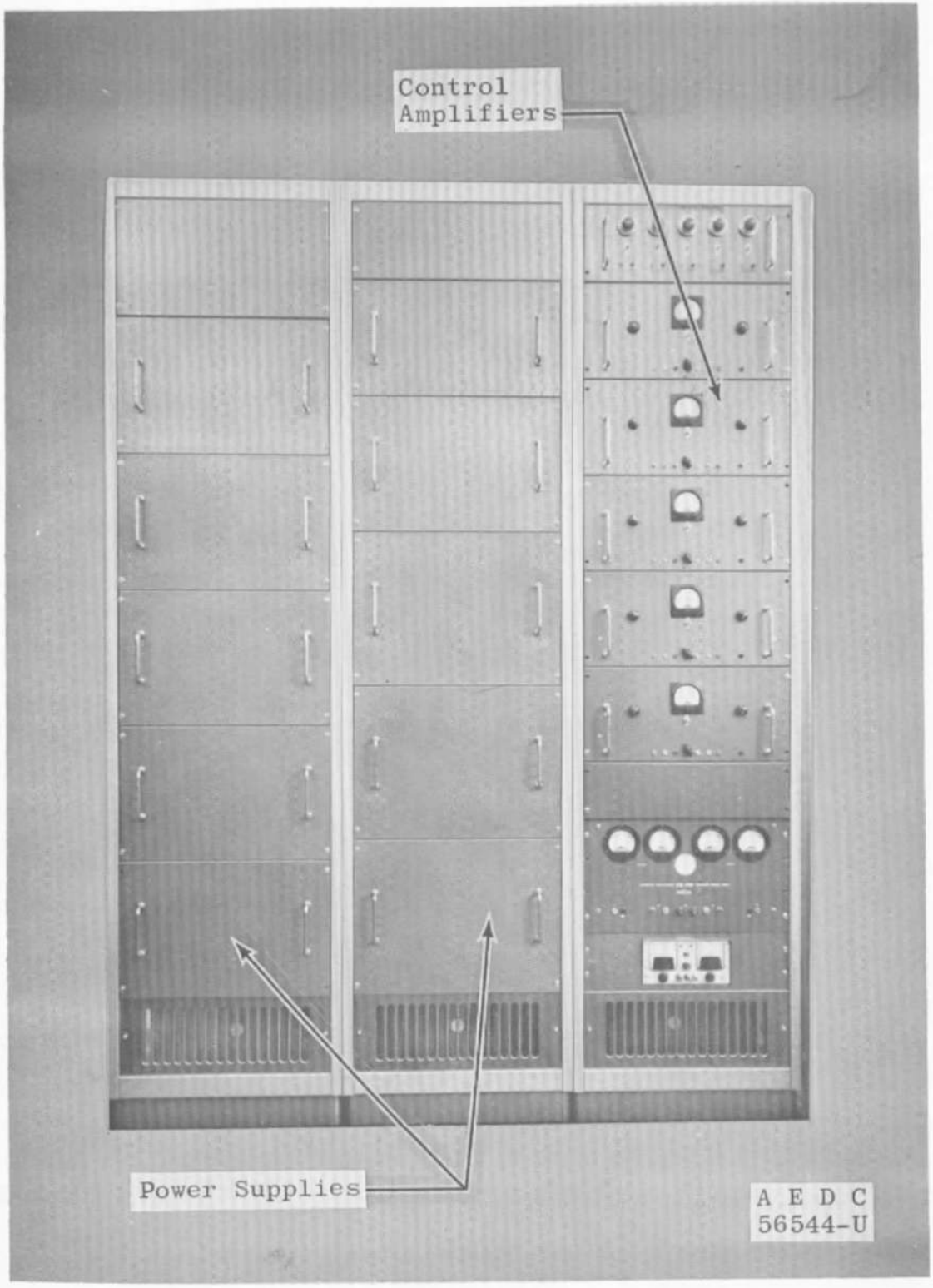

Fig. 17 Power Supply and Control Amplifier Racks

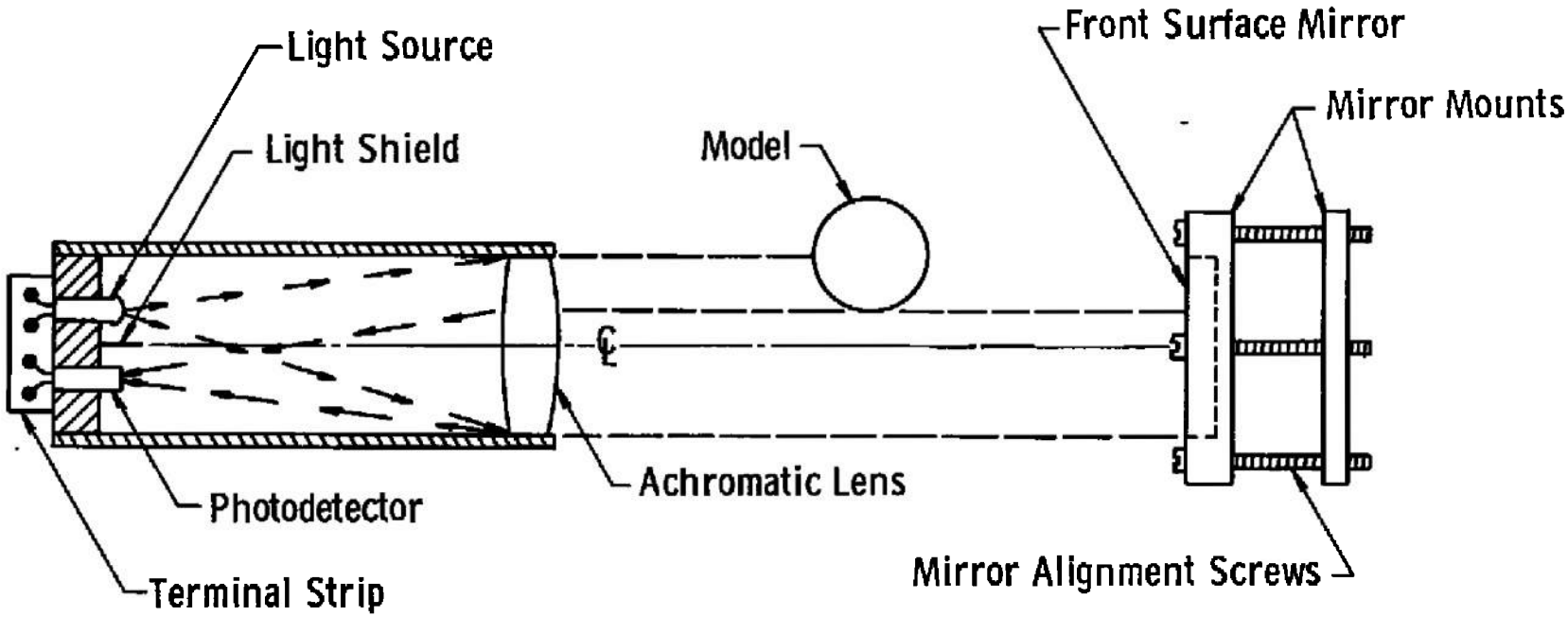

Fig. 18 Folded Optical System

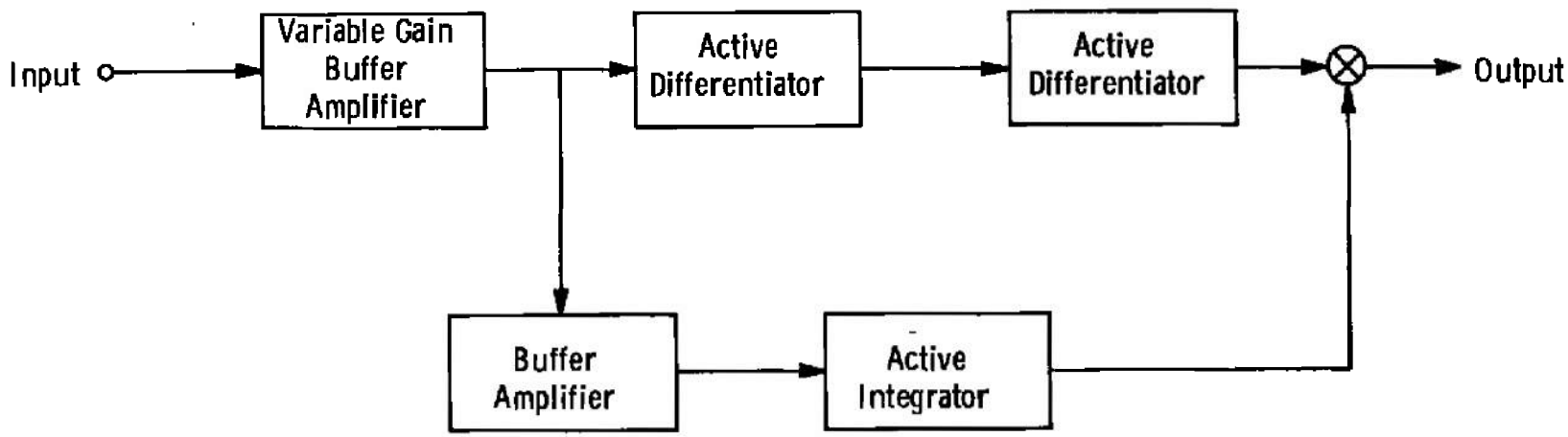

Fig. 19 Control Amplifier Block Diagram

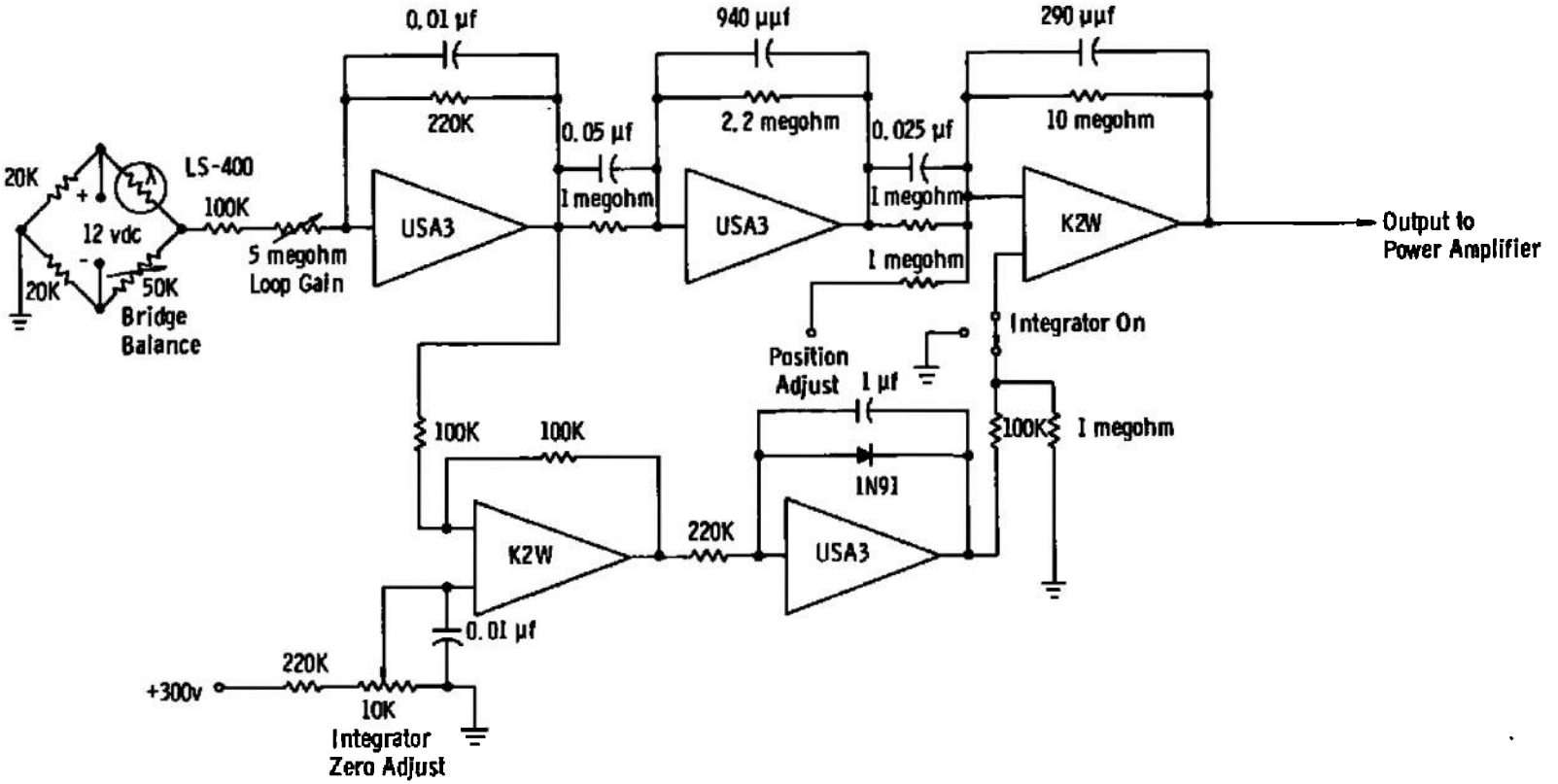

Fig. 20 Schematic Diagram of Control Amplifier

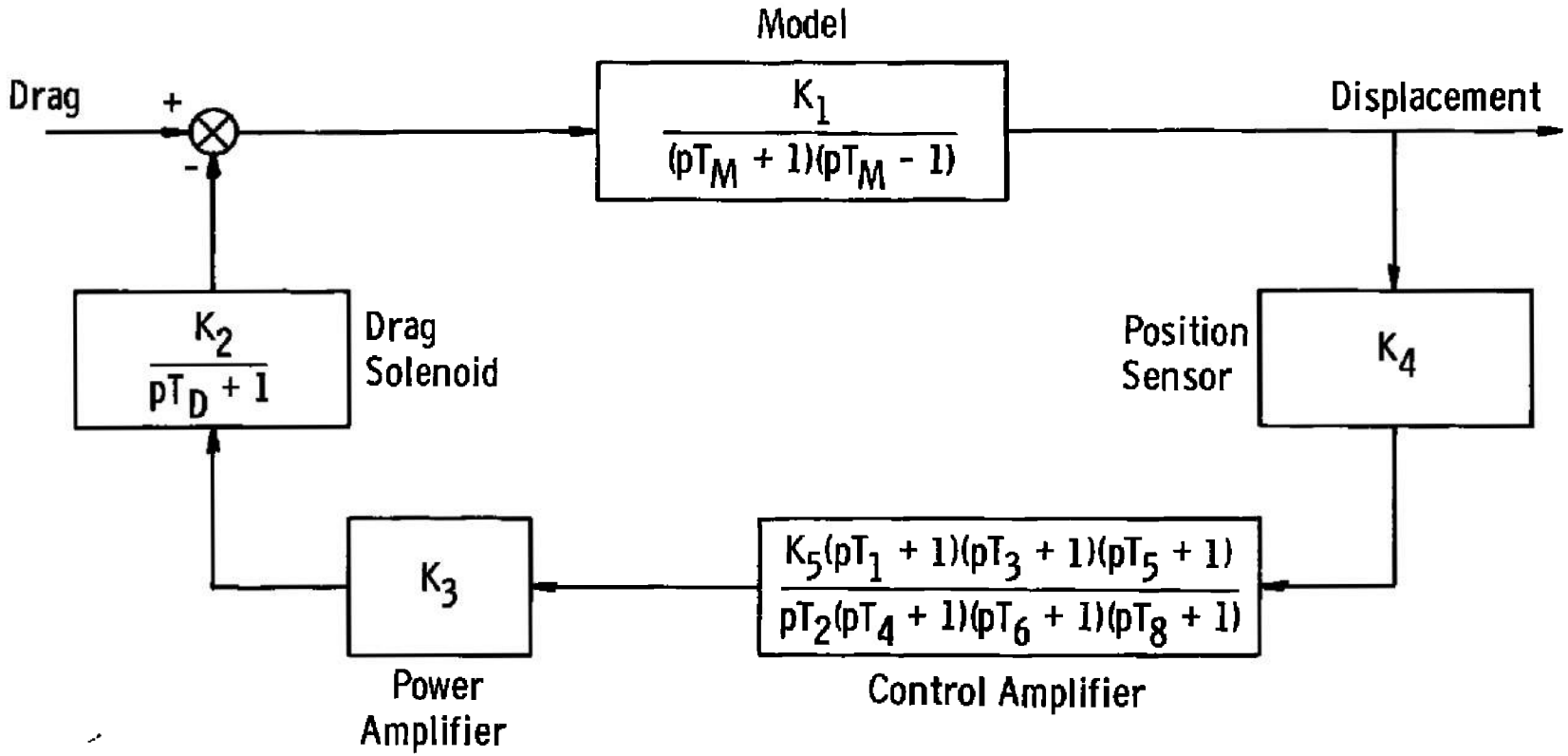

Fig. 21 Functional Block Diagram of Drag System

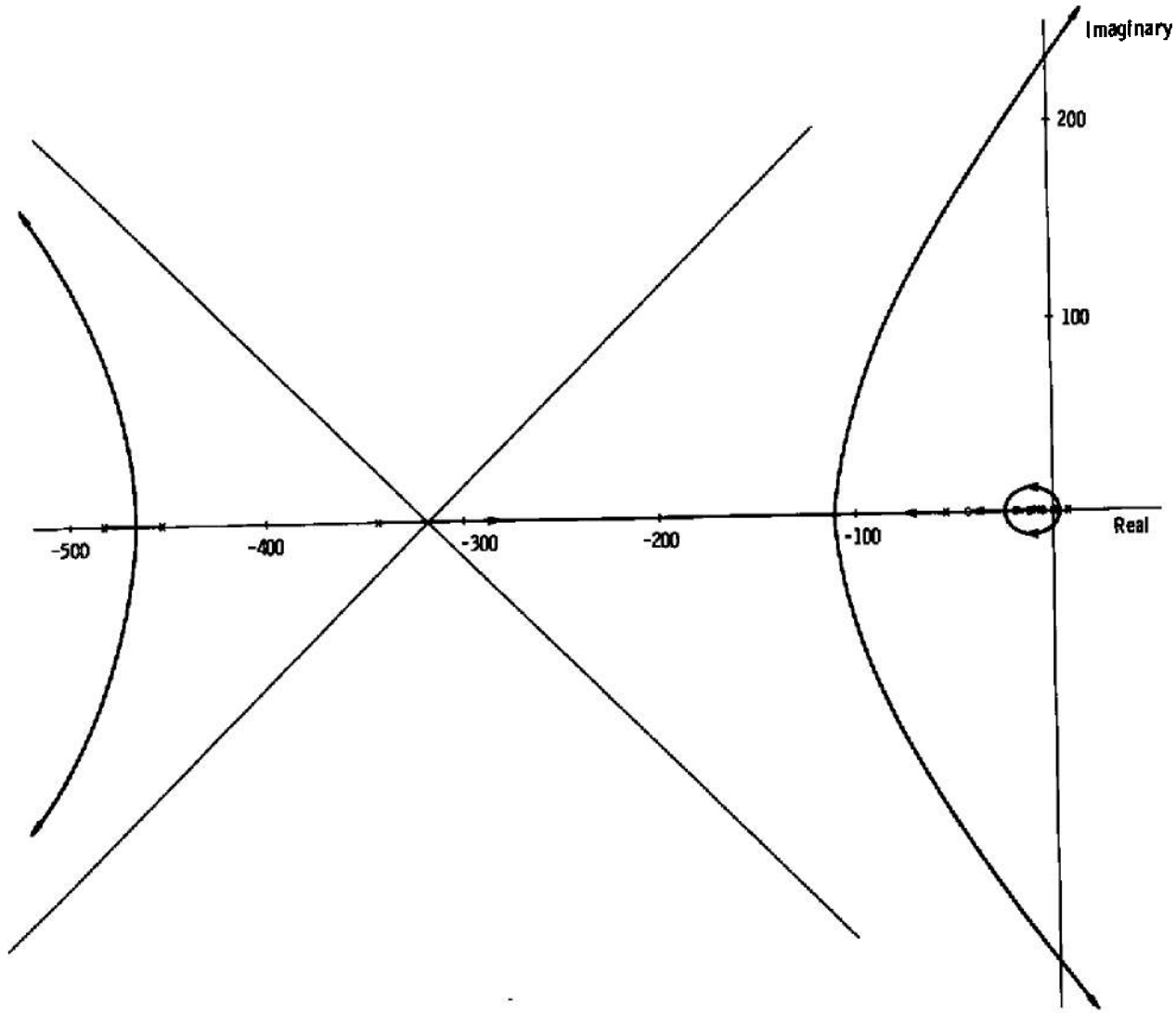

Fig. 22 Drag System Root Locus

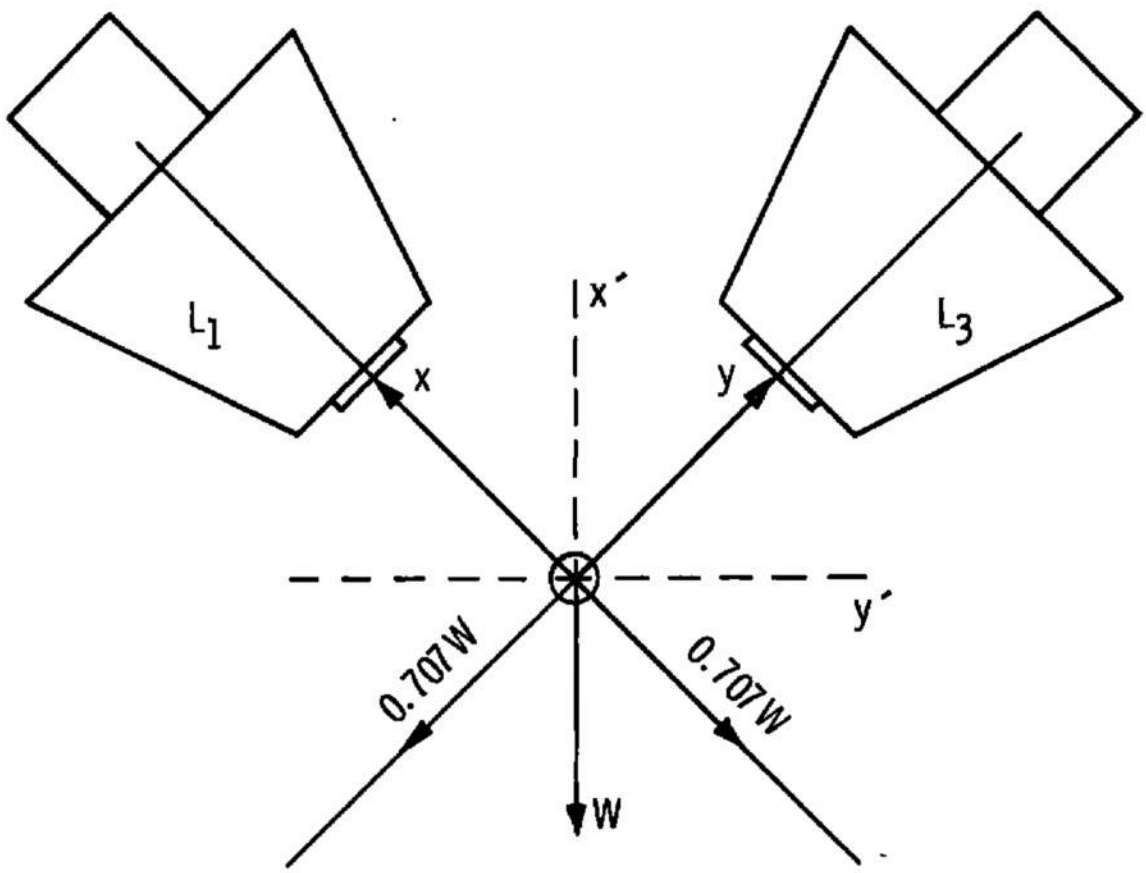

Fig. 23 Axis Rotation of Lift System

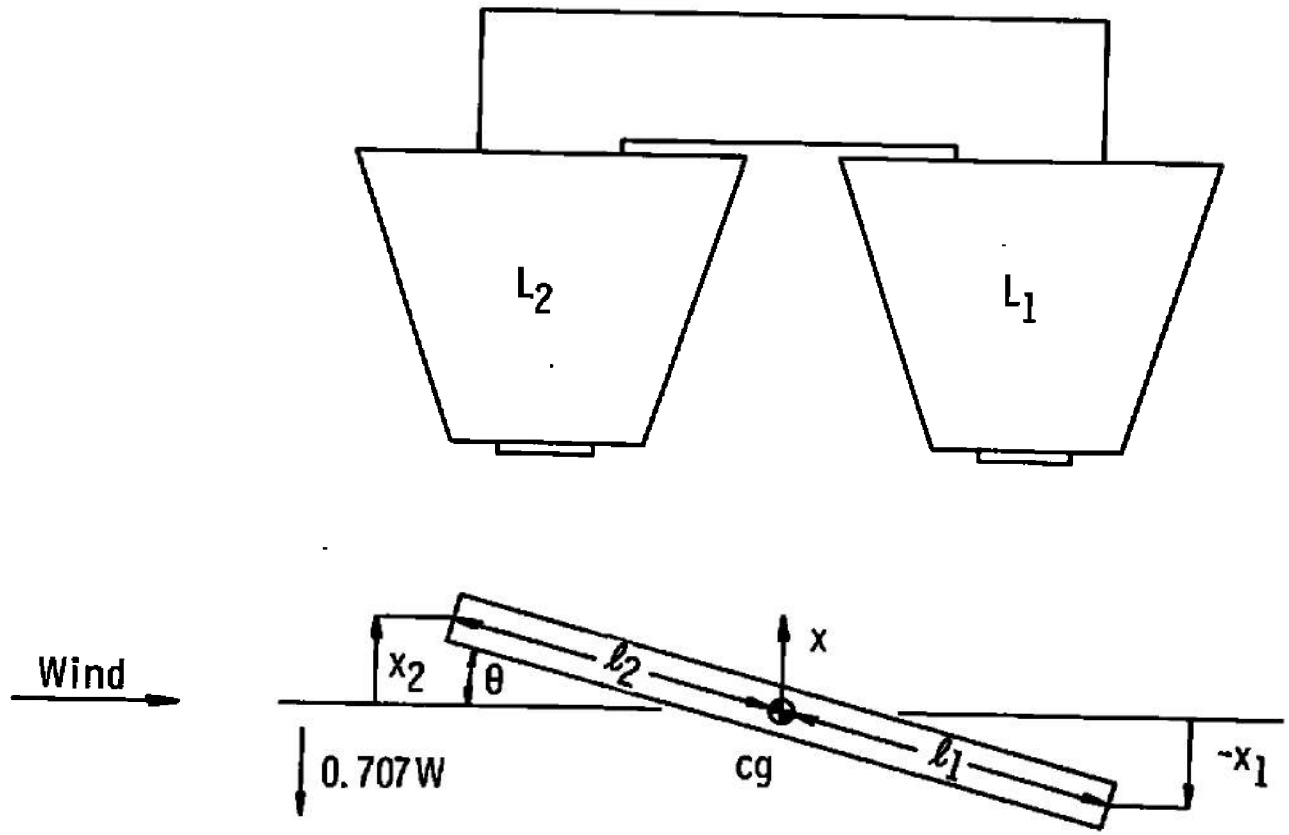

Fig. 24 Model Position in x-z Plane

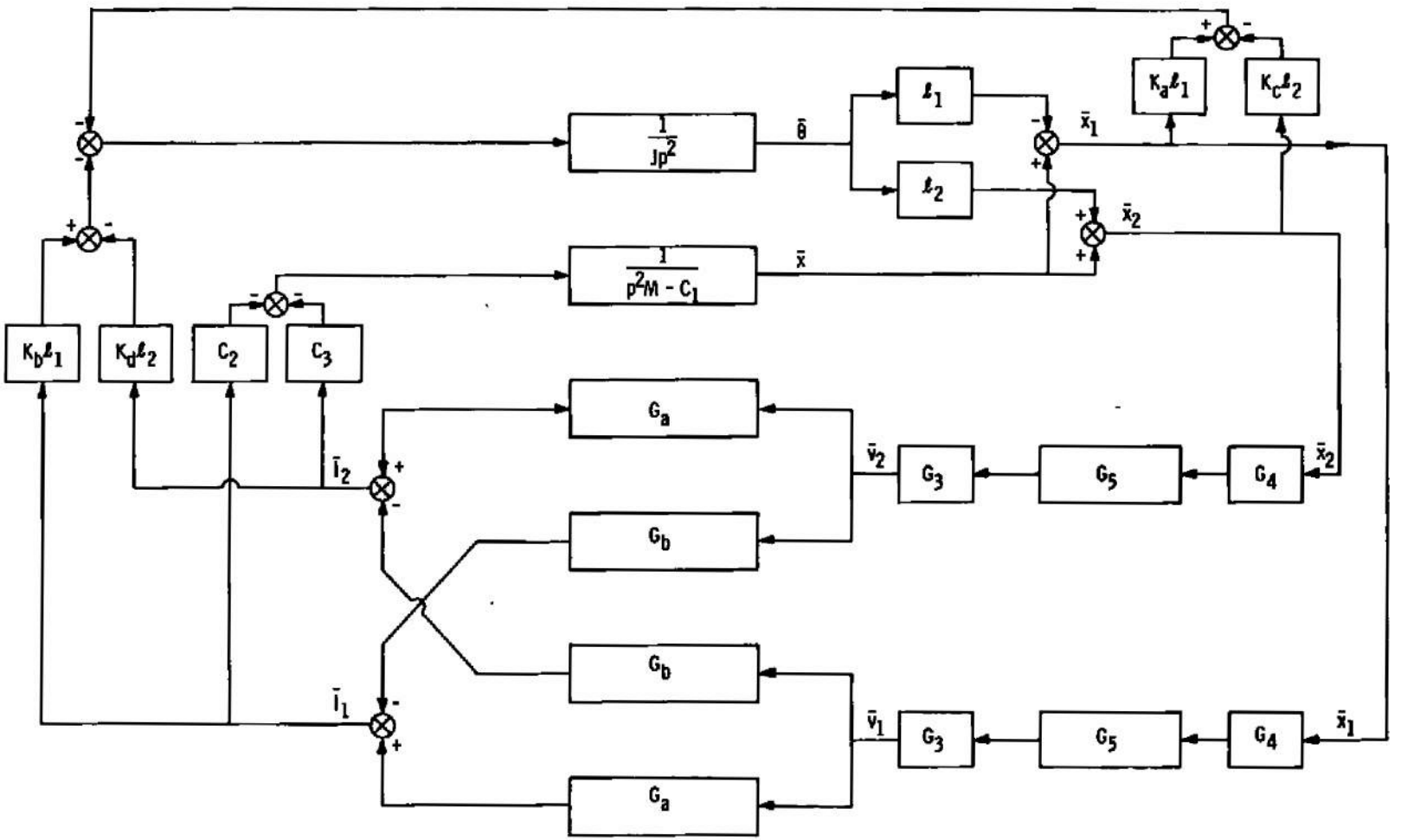

Fig. 25 Lift x-Axis Block Diagram

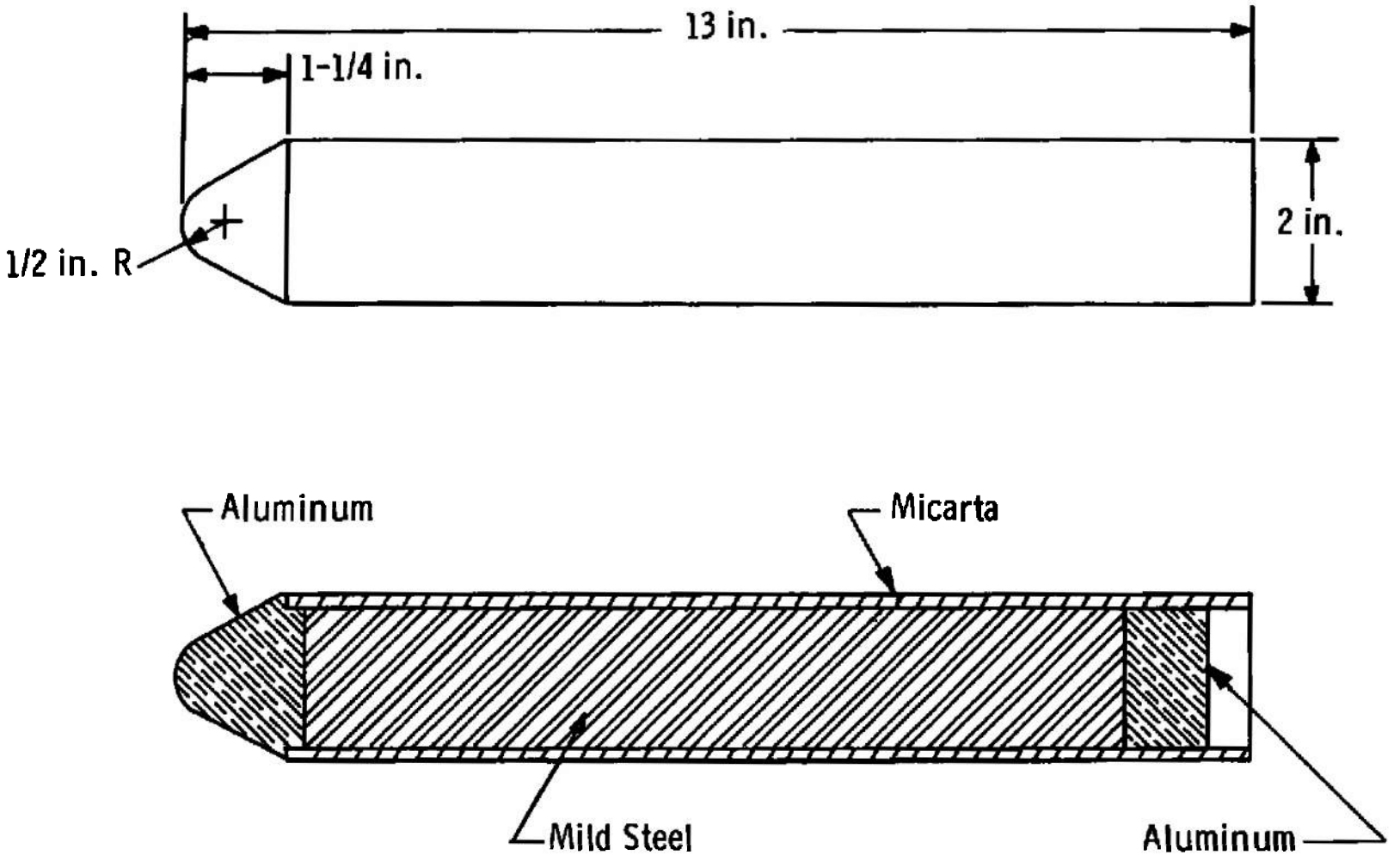

Fig. 26 Calibration Model

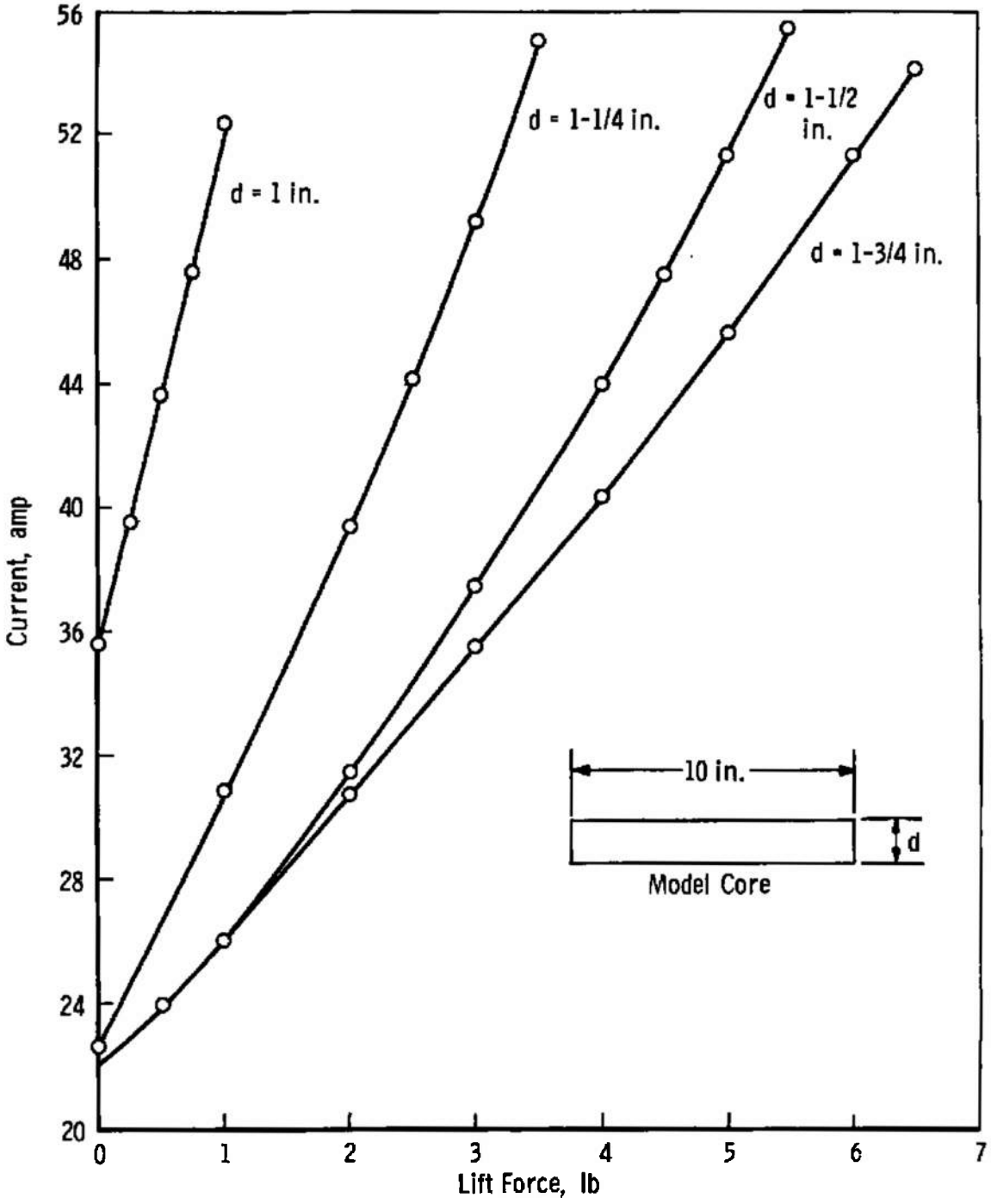

Fig. 27 Suspension Electromagnet Current versus Force for Various Core Sizes

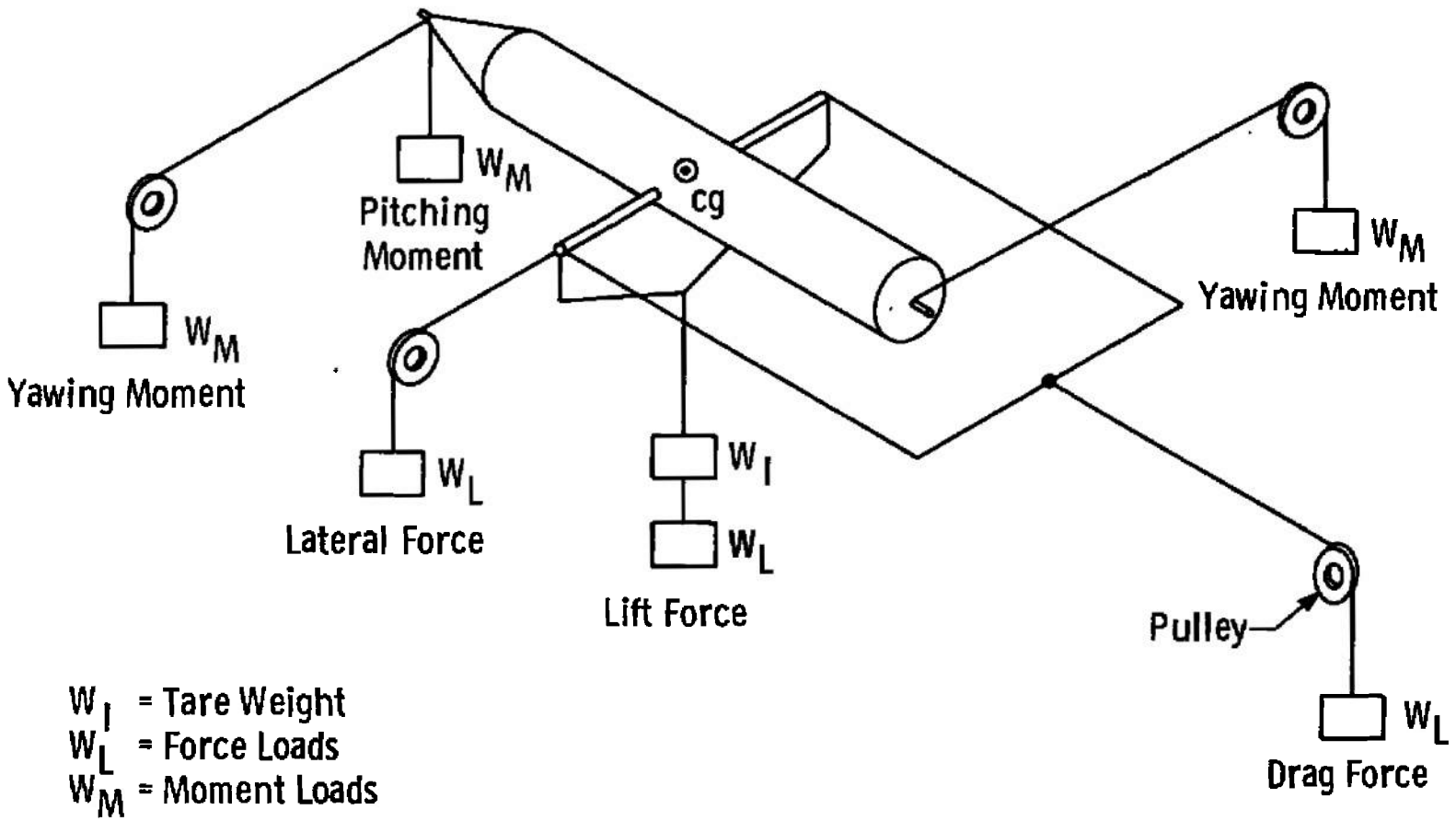

Fig. 28 Weight and Pulley Arrangement for Suspension System Calibration

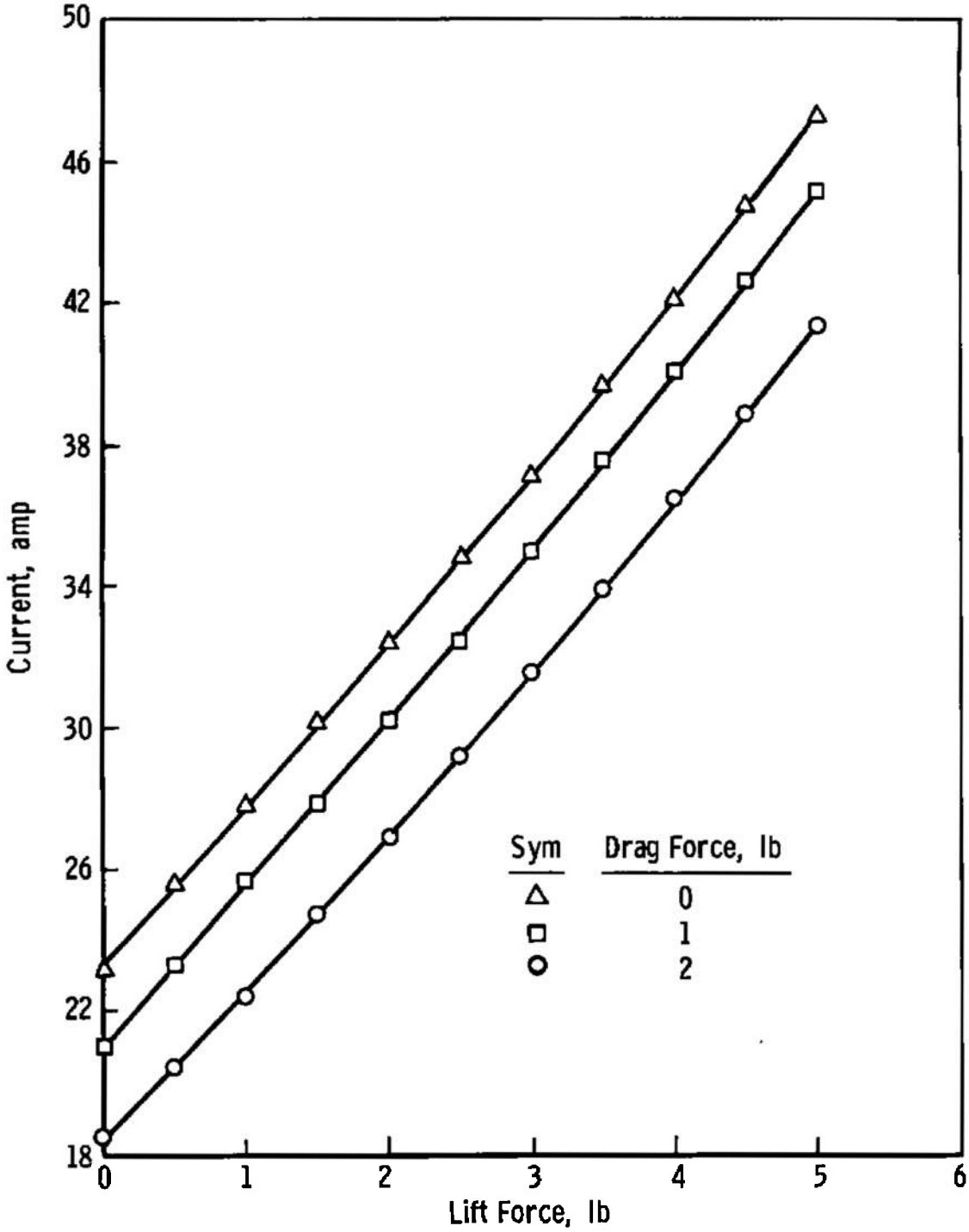

Fig. 29 Lift Force Calibration

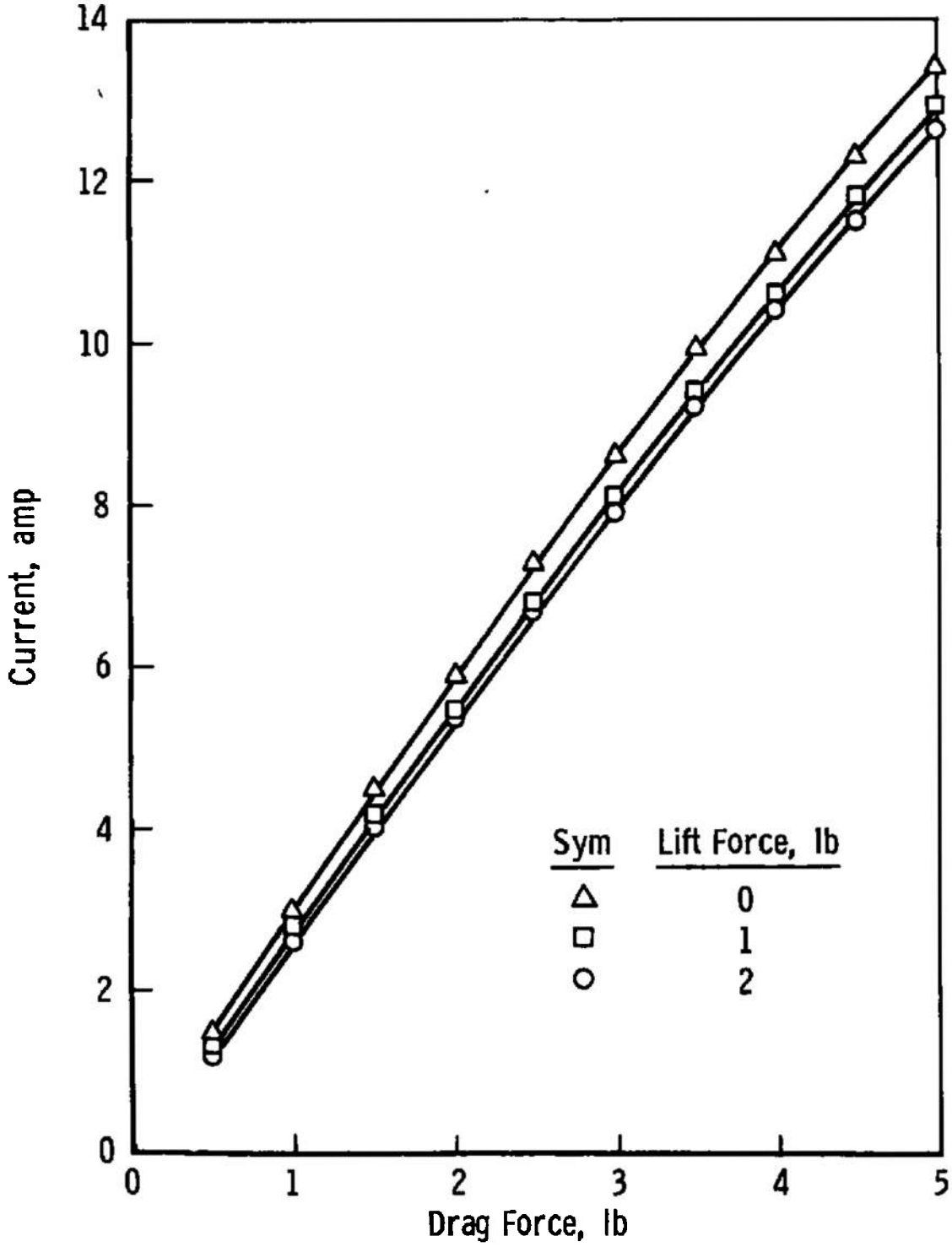

Fig. 30 Drag Force Calibration

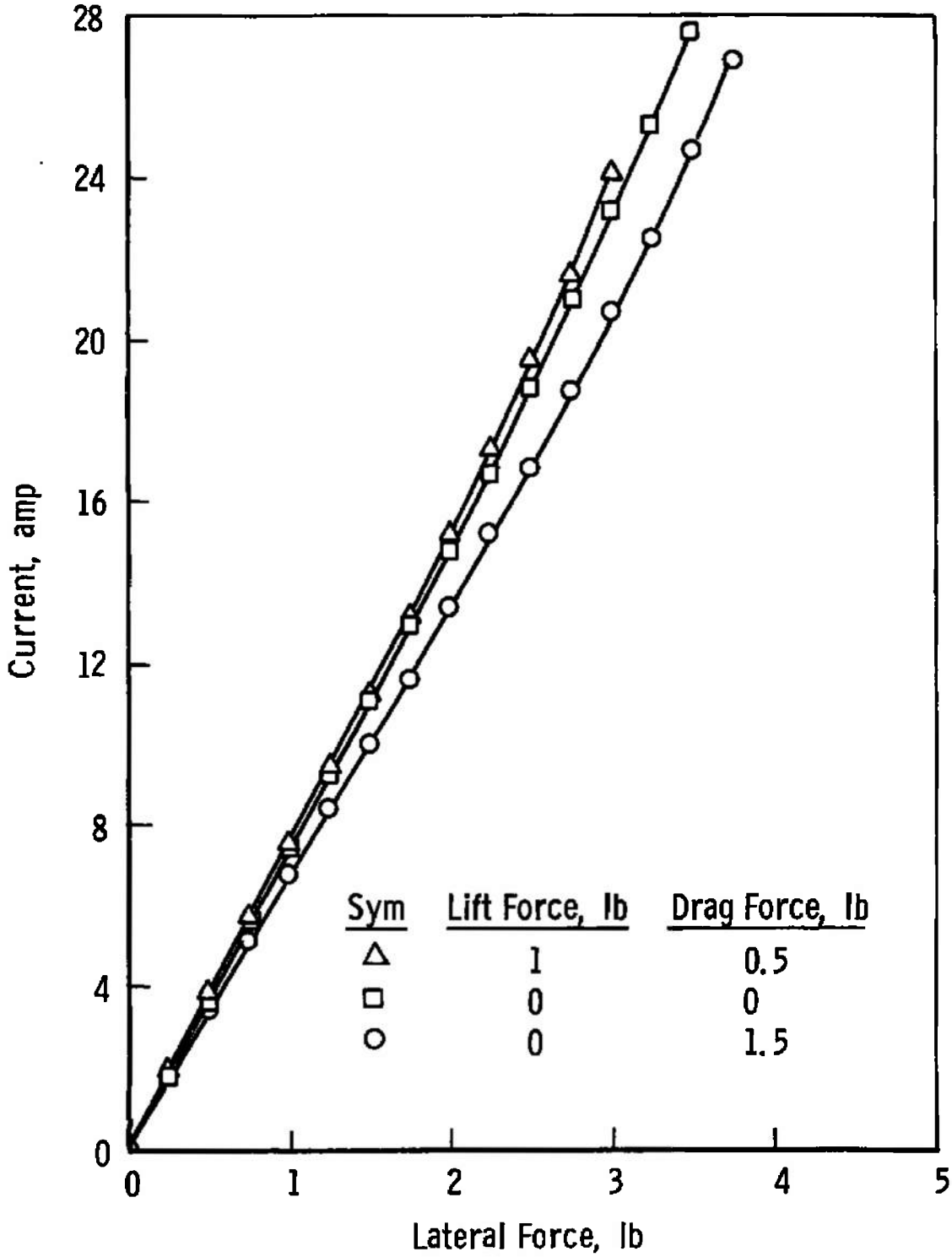

Fig. 31 Lateral Force Calibration

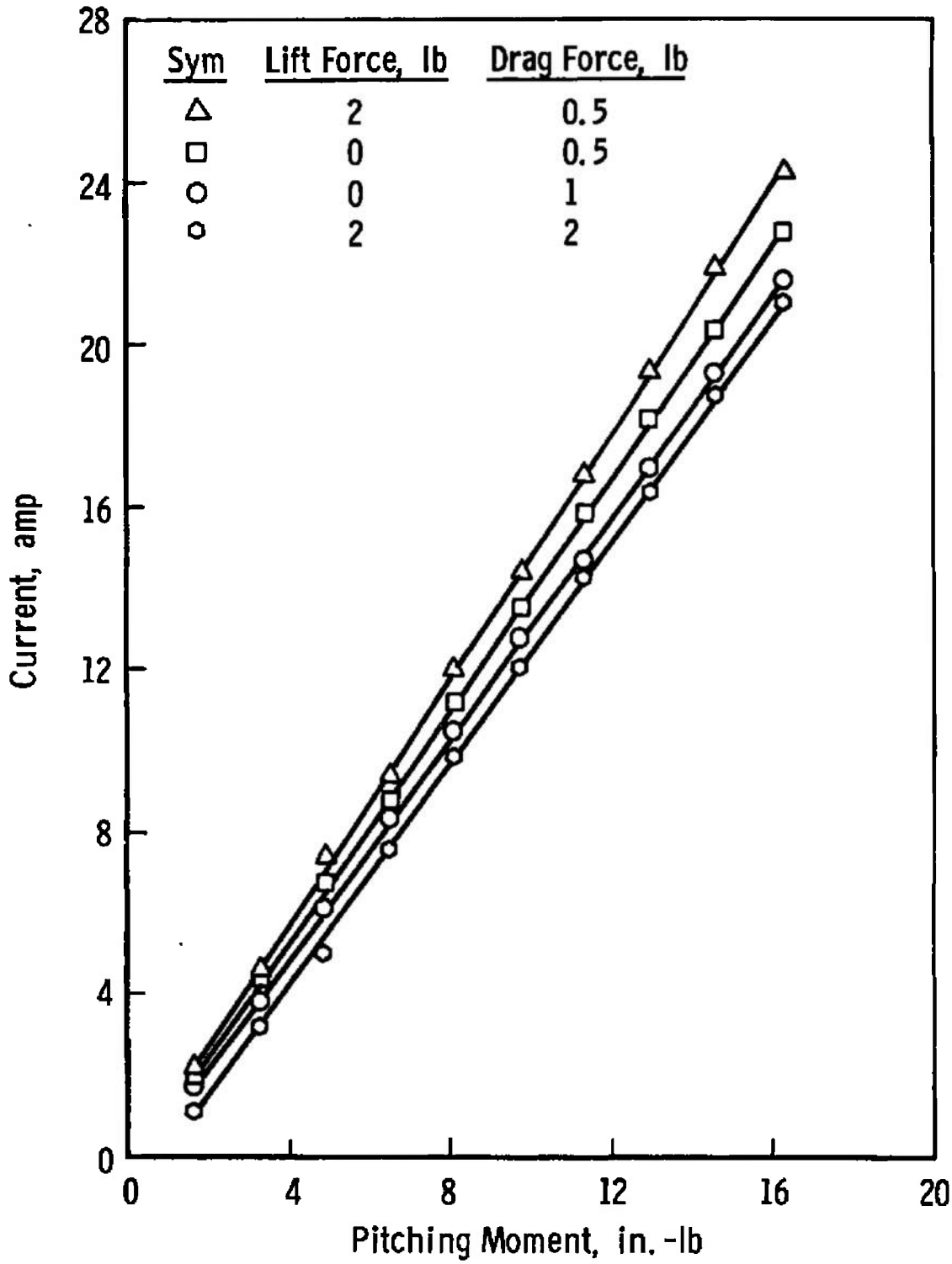

Fig. 32 Pitching Moment Calibration

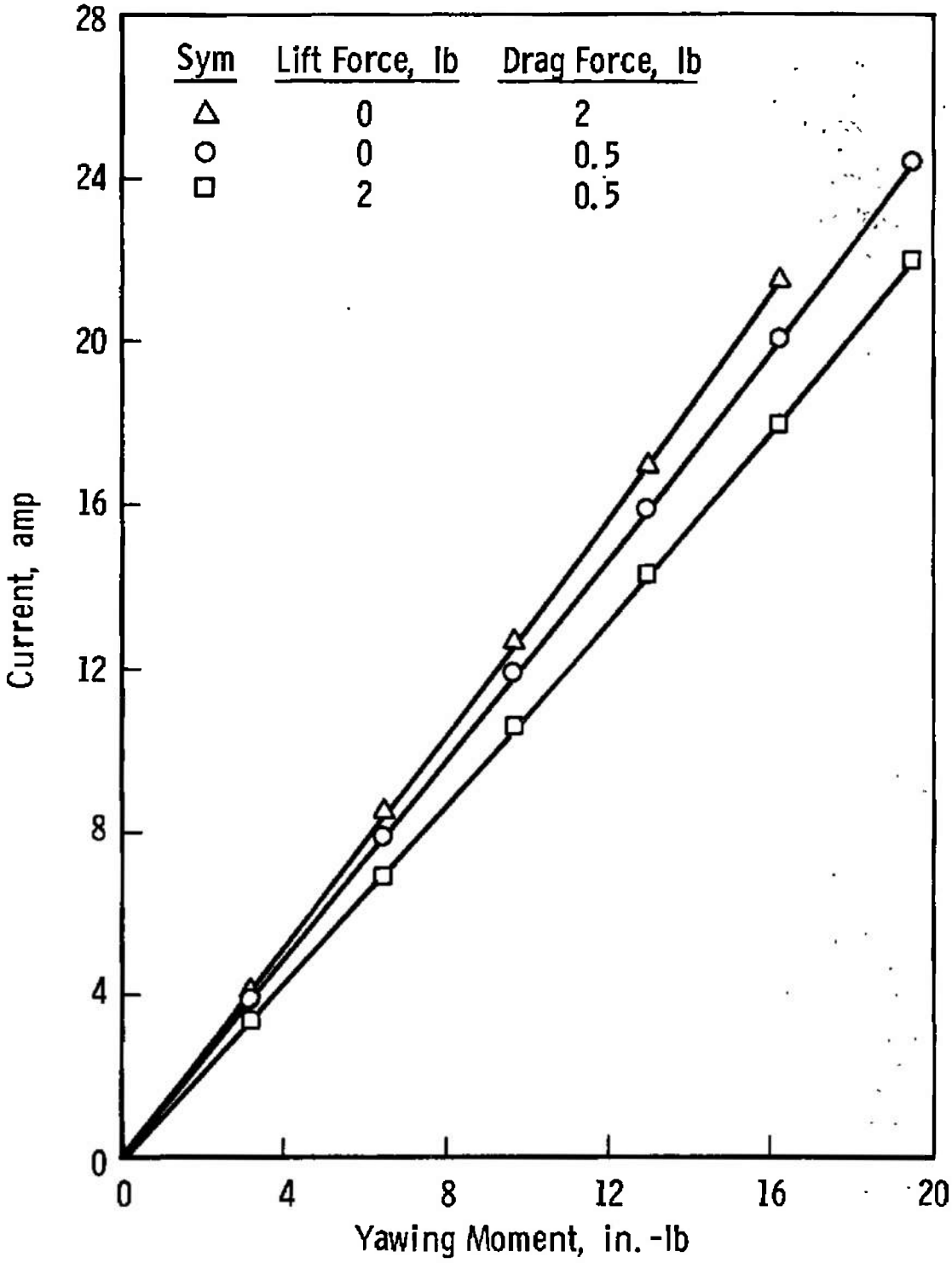

Fig. 33 Yawing Moment Calibration

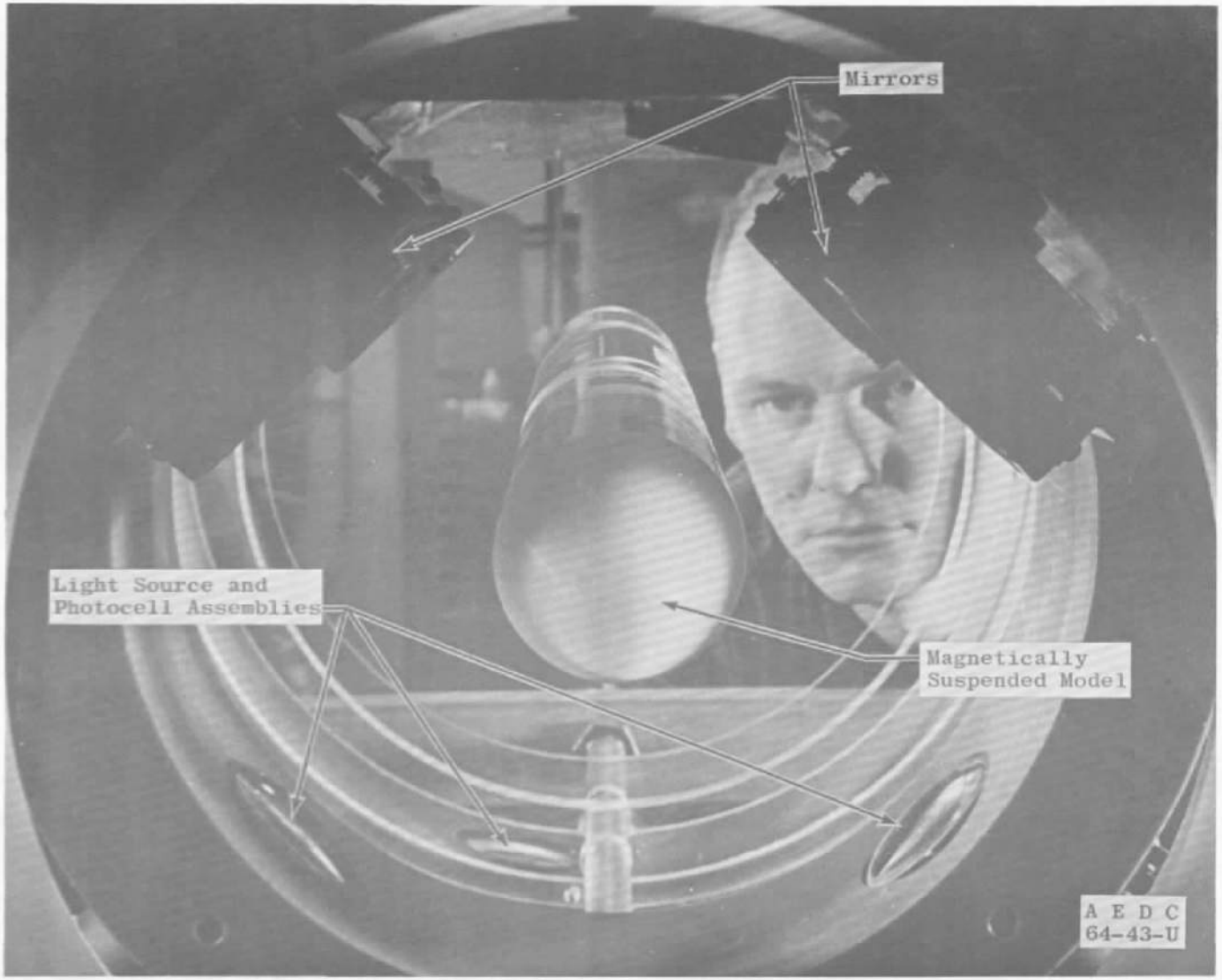

Fig. 34 Model in Magnetic Suspension System

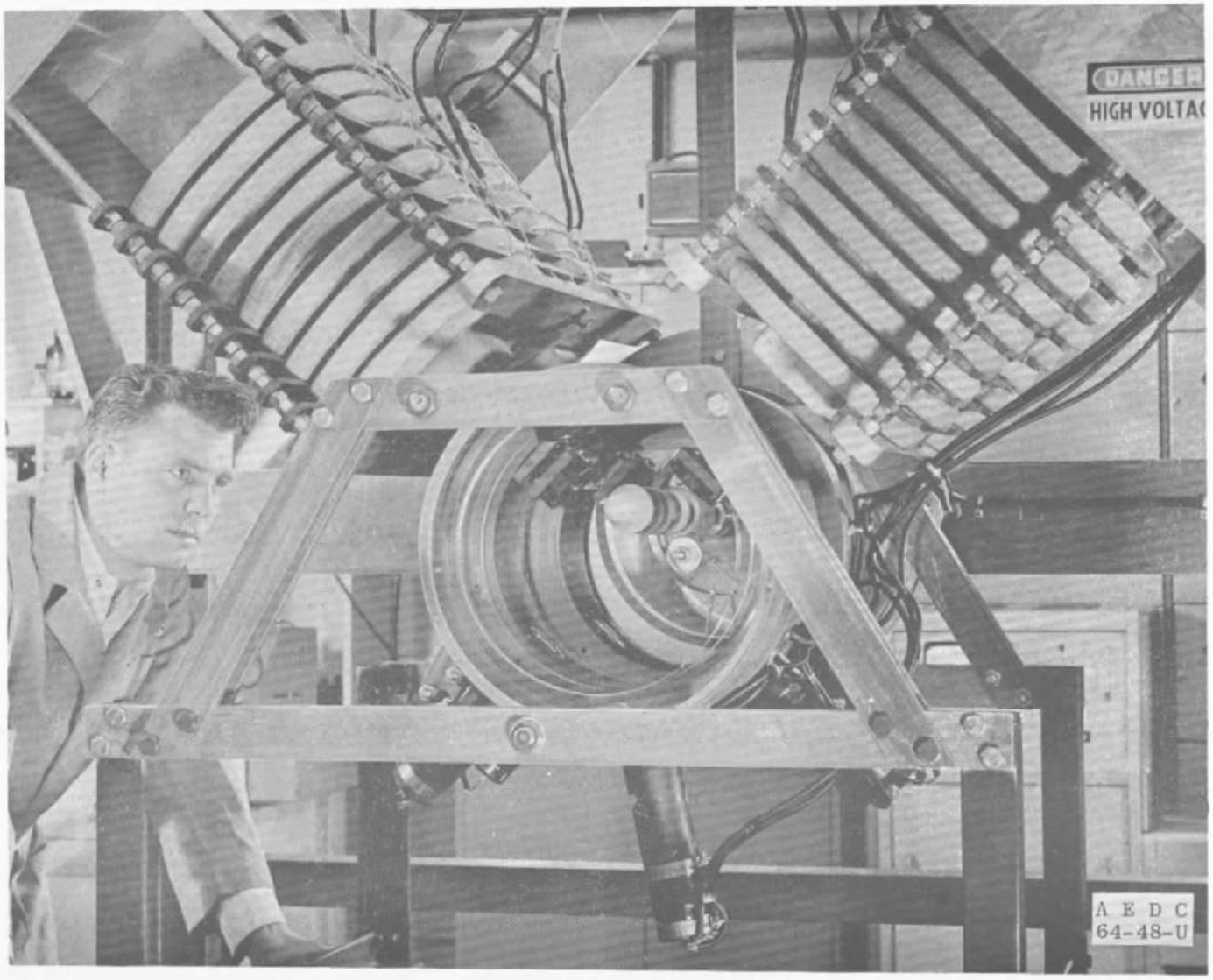

Fig. 35 Prototype Magnetic Suspension System

UNCLASSIFIED
Security Classification

DOCUMENT CONTROL DATA - R&D
(Security classification of title, body of abstract and indexing annotation must be entered when the overall report is classified)

1. ORIGINATING ACTIVITY *(Corporate author)*
Arnold Engineering Development Center (AEDC)
ARO, Inc. Operating Contractor
Arnold Air Force Station, Tennessee

2a. REPORT SECURITY CLASSIFICATION
UNCLASSIFIED

2b. GROUP
N/A

3. REPORT TITLE
DESIGN AND INITIAL CALIBRATION OF A MAGNETIC SUSPENSION SYSTEM FOR WIND TUNNEL MODELS

4. DESCRIPTIVE NOTES *(Type of report and inclusive dates)*
N/A

5. AUTHOR(S) *(Last name, first name, initial)*
Crain, C. D., Brown, M. D., and Cortner, A. H. ARO, Inc.

6. REPORT DATE
September 1965

7a. TOTAL NO. OF PAGES
71

7b. NO. OF REFS
16

8a. CONTRACT OR GRANT NO.
AF40(600)-1200

b. PROJECT NO. 8952

c. Program Area 750A

d. Task 895201

9a. ORIGINATOR'S REPORT NUMBER(S)
AEDC-TR-65-187

9b. OTHER REPORT NO(S) *(Any other numbers that may be assigned this report)*
N/A

10. AVAILABILITY/LIMITATION NOTICES
Qualified requesters may obtain copies of this report from DDC.

11. SUPPLEMENTARY NOTES
N/A

12. SPONSORING MILITARY ACTIVITY
Arnold Engineering Development Center (AEDC), Air Force Systems Command (AFSC), Arnold Air Force Station, Tennessee

13. ABSTRACT
The design, construction, and initial calibration of a prototype magnetic suspension system capable of supporting models in a wind tunnel are described. Magnetically supported models allow measurements free from the interferences produced by mechanical model supports. The described system is of the "V"-type configuration and is compared to other types of configurations. Initial force calibration data are given, and it is concluded that quantitative force data would be difficult to obtain from the prototype suspension system because of the many interactions involved. This system was, for the most part, designed in 1959 and does not represent the state-of-the-art insofar as magnetic suspension systems are concerned. Recommendations for future magnetic suspension system designs are included as well as a discussion of the types of aerodynamic testing where the use of such a system might be beneficial.

This document has been approved for public release its distribution is unlimited. Per DDC TR-75-5 AD A011206 Dtd July 1975

DD FORM 1 JAN 64 1473

UNCLASSIFIED
Security Classification

14 KEY WORDS	LINK A ROLE	LINK A WT	LINK B ROLE	LINK B WT	LINK C ROLE	LINK C WT
calibration						
magnetism						
suspension						
wind tunnels						
space simulation						

INSTRUCTIONS

1. ORIGINATING ACTIVITY: Enter the name and address of the contractor, subcontractor, grantee, Department of Defense activity or other organization *(corporate author)* issuing the report.

2a. REPORT SECURITY CLASSIFICATION: Enter the overall security classification of the report. Indicate whether "Restricted Data" is included. Marking is to be in accordance with appropriate security regulations.

2b. GROUP: Automatic downgrading is specified in DoD Directive 5200.10 and Armed Forces Industrial Manual. Enter the group number. Also, when applicable, show that optional markings have been used for Group 3 and Group 4 as authorized.

3. REPORT TITLE: Enter the complete report title in all capital letters. Titles in all cases should be unclassified. If a meaningful title cannot be selected without classification, show title classification in all capitals in parenthesis immediately following the title.

4. DESCRIPTIVE NOTES: If appropriate, enter the type of report, e.g., interim, progress, summary, annual, or final. Give the inclusive dates when a specific reporting period is covered.

5. AUTHOR(S): Enter the name(s) of author(s) as shown on or in the report. Enter last name, first name, middle initial. If military, show rank and branch of service. The name of the principal author is an absolute minimum requirement.

6. REPORT DATE: Enter the date of the report as day, month, year; or month, year. If more than one date appears on the report, use date of publication.

7a. TOTAL NUMBER OF PAGES: The total page count should follow normal pagination procedures, i.e., enter the number of pages containing information.

7b. NUMBER OF REFERENCES: Enter the total number of references cited in the report.

8a. CONTRACT OR GRANT NUMBER: If appropriate, enter the applicable number of the contract or grant under which the report was written.

8b, 8c, & 8d. PROJECT NUMBER: Enter the appropriate military department identification, such as project number, subproject number, system numbers, task number, etc.

9a. ORIGINATOR'S REPORT NUMBER(S): Enter the official report number by which the document will be identified and controlled by the originating activity. This number must be unique to this report.

9b. OTHER REPORT NUMBER(S): If the report has been assigned any other report numbers *(either by the originator or by the sponsor)*, also enter this number(s).

10. AVAILABILITY/LIMITATION NOTICES: Enter any limitations on further dissemination of the report, other than those imposed by security classification, using standard statements such as:

(1) "Qualified requesters may obtain copies of this report from DDC."

(2) "Foreign announcement and dissemination of this report by DDC is not authorized."

(3) "U. S. Government agencies may obtain copies of this report directly from DDC. Other qualified DDC users shall request through _____."

(4) "U. S. military agencies may obtain copies of this report directly from DDC. Other qualified users shall request through _____."

(5) "All distribution of this report is controlled. Qualified DDC users shall request through _____."

If the report has been furnished to the Office of Technical Services, Department of Commerce, for sale to the public, indicate this fact and enter the price, if known.

11. SUPPLEMENTARY NOTES: Use for additional explanatory notes.

12. SPONSORING MILITARY ACTIVITY: Enter the name of the departmental project office or laboratory sponsoring *(paying for)* the research and development. Include address.

13. ABSTRACT: Enter an abstract giving a brief and factual summary of the document indicative of the report, even though it may also appear elsewhere in the body of the technical report. If additional space is required, a continuation sheet shall be attached.

It is highly desirable that the abstract of classified reports be unclassified. Each paragraph of the abstract shall end with an indication of the military security classification of the information in the paragraph, represented as *(TS)*, *(S)*, *(C)*, or *(U)*.

There is no limitation on the length of the abstract. However, the suggested length is from 150 to 225 words.

14. KEY WORDS: Key words are technically meaningful terms or short phrases that characterize a report and may be used as index entries for cataloging the report. Key words must be selected so that no security classification is required. Identifiers, such as equipment model designation, trade name, military project code name, geographic location, may be used as key words but will be followed by an indication of technical context. The assignment of links, rules, and weights is optional.