UNCLASSIFIED

AD 414825

DEFENSE DOCUMENTATION CENTER

FOR

SCIENTIFIC AND TECHNICAL INFORMATION

CAMERON STATION, ALEXANDRIA, VIRGINIA

UNCLASSIFIED

NOTICE: When government or other drawings, specifications or other data are used for any purpose other than in connection with a definitely related government procurement operation, the U. S. Government thereby incurs no responsibility, nor any obligation whatsoever; and the fact that the Government may have formulated, furnished, or in any way supplied the said drawings, specifications, or other data is not to be regarded by implication or otherwise as in any manner licensing the holder or any other person or corporation, or conveying any rights or permission to manufacture, use or sell any patented invention that may in any way be related thereto.

414825

63-4-5

CATALOGED BY DDC
AS AD No. 414825

TECHNICAL NOTE R-28

A FORTRAN PROGRAM TO CALCULATE A BALLISTIC MISSILE TRAJECTORY FROM BURN OUT TO IMPACT

Prepared By

Charles F. Ostner

November, 1962

BROWN ENGINEERING COMPANY INC.
HUNTSVILLE, ALABAMA

DDC
RECEIVED
AUG 31 1963
TISIA D

TECHNICAL NOTE R-28

A FORTRAN PROGRAM TO CALCULATE A BALLISTIC MISSILE TRAJECTORY FROM BURN OUT TO IMPACT

November, 1962

Prepared For

DIRECTORATE OF MISSILE INTELLIGENCE
ARMY MISSILE COMMAND

By

SCIENTIFIC RESEARCH STAFF
BROWN ENGINEERING COMPANY, INC.

Contract No. DA-01-009-ORD-1068

Prepared By:

Charles F. Ostner
Senior Project Engineer

ABSTRACT

This computer program computes a ballistic trajectory from burn out or any point thereafter to impact. It assumes point mass and a spherical earth. The program takes into account air resistance, the variation of the gravitational and centrifugal field with altitude, and earth's rotation. It uses a system of co-ordinates (X, Y, and Z) rigidly connected with the rotating earth.

The computer program is written in FORTRAN II and an autocoder deck has been compiled. The program is run on the IBM 1410 computer. It is being adapted for use on the IBM 1620 computer for use by the Army. This program may be obtained from the Scientific Programming Section; Program No. SP9. It was programmed by W. B. Warren of the Scientific Research Staff.

Approved By:

Harry C. Crews, Jr.

Harry C. Crews, Jr.
Director, Special Projects Office

SYMBOLS

Symbol	Computer Symbol	
β	BETA	Bearing angle - Clockwise horizontal angle from north to direction of flight
δ	DELTA	Flight path angle - Angle between missile axis and local horizontal. Angle is positive when missile is climbing.
ϕ	PHI	Latitude - Positive in northern hemisphere, negative in southern
θ	THETA	Longitude - Increases to the east. When firing east, $\theta_o = 0$, to the west, $\theta_o = \pi/2$
X	X	See Figure 1 - Co-ordinate system with center of earth as origin. Z is the polar axis. X and
Y	Y	Y are in the plane of the Equator and are 90° apart. The X axis corresponds to the point
Z	Z	where $\theta = 0$. All are positive as shown.
γ	GAMMA	Range angle - Vertex at center of earth measured from the point where data were put into the program to the position attained along the trajectory.
A_x	AX	Acceleration in the X direction
A_y	AY	Acceleration in the Y direction
A_z	AZ	Acceleration in the Z direction
A_t	AT	Acceleration along the trajectory
V_x	VX	Velocity in the X direction
V_y	VY	Velocity in the Y direction
V_z	VZ	Velocity in the Z direction
V_t	VT	Velocity along the trajectory
R_a	RA	Distance from center of earth to re-entry body

Symbols (Cont.)

Symbol	Computer Symbol	
H	ALT	Distance from surface of earth to re-entry body
R	R	Radius of earth - Constant (20, 902, 890 ft.)
$\bar{r}$	-	Geocentric location vector
g_o	GO	Acceleration of gravity at sea level - constant (32.174 ft/sec^2)
g	GRAV	Acceleration of gravity at altitude
U	U	Earth's rotation in radians per second - constant ($2\pi/24 \times 3600$)
σ	SIGMA	Angle of a spherical triangle - see Figure 3
u	AMU	$(g_o R^2)^{\frac{1}{2}}$
$\left(\frac{w}{C_D A}\right)$	BALCO	Ballistic coefficient - Estimated from shape and dimensions
ρ	DEN	Air density from tape for IBM 1410 program - computed internally in IBM 1620 program

PHYSICAL CONSTANTS

$R = 20,902,890$ feet

$g_o = 32.174$ ft/sec^2

$U = 2\pi/24 \times 3600$ radians/sec.

$u^2 = g_o R^2$

TABLE OF CONTENTS

	PAGE NO.:
INTRODUCTION	1
ANALYSIS	2
Initial Conditions	2
Development of Equations	3
DISCUSSION	15
RESULTS	16
Information Flow Diagram	16
FORTRAN Statement - English Units	25
FORTRAN Statement - Metric Units	32
REFERENCES	39

INTRODUCTION

This computer program may be used to study the free flight and re-entry portions of a ballistic trajectory. The information calculated and printed by the computer includes time of flight, location in both X, Y, and Z from earth's center and latitude, longitude and altitude from earth's surface, acceleration, velocity, flight path angle, bearing angle and range in nautical miles.

The model chosen for use in this computer program was taken from References 1 and 2. Point mass and a spherical earth are assumed. The basic acceleration equations are developed in Reference 1. Reference 2 discusses a similar computer program which uses the same acceleration equations and many of the other relationships used in this computer program.

A portion of the computer program discussed in Reference 3 was used to compute density in the IBM 1620 Computer program. This portion is an integral part of that program.

Library Functions Used:

SQRT
SIN
COS
EXPF
ATAN

ANALYSIS

Initial Conditions

The computer program will accept initial conditions at burn out or at any time thereafter until impact. The items of information needed are punched on two IBM cards which are placed at the end of the deck.

Items	Comments
δ	Positive when missile is climbing.
β	Clockwise horizontal angle from north
θ	Initial $\theta_o = 0$ when flying eastward and $\theta_o = \pi/2$ when flying toward the west
ϕ	Positive in northern hemisphere
H	Altitude above earth's surface
R	20,902,890 ft. (earth's radius)
V_t	Velocity along the trajectory
g_o	32.174 ft/sec^2
U	$2\pi/24 \times 3600$ radians per second
$\left(\frac{w}{C_D A}\right)$	Ballistic coefficient

All angles are put into the computer in radians. The computer program is designed to accept and compute English units. All angles are printed in degrees. (Program SP-9-E)

The computer program may be modified to accept, compute and print metric units by using metric units for H, R, V_t, g_o and by using conversion

factors for the altitude and density in the density subroutine in the IBM 1620 computer program. A deck in metric units has been prepared. (SP-9-M)

Development of Equations

In order to provide the proper initial conditions, the following set of co-ordinate transformations were used as an integral part of the computer program. (See Figure 1):

$$X = R_a \cos \phi \cos \theta \tag{1}$$

$$Y = R_a \cos \phi \sin \theta \tag{2}$$

$$Z = R_a \sin \phi \tag{3}$$

By definition:

$$H = R_a - R \tag{4}$$

It follows that:

$$R_a = (X^2 + Y^2 + Z^2)^{\frac{1}{2}} \tag{5}$$

In order to convert the input velocity along the trajectory to components in the X, Y, and Z directions, the angles δ, β, ϕ, and θ are used. See Figure 1. δ is the angle the vehicle makes with the local horizontal.

$V_t \sin \delta$ = a velocity component along R_a (6)

$V_t \sin \delta \sin \phi$ = a velocity component along the Z axis (7)

$V_t \sin \delta \cos \phi$ = a velocity component along R_a projected into the plane of the Equator (8)

$V_t \sin \delta \cos \phi \sin \theta$ = a velocity component along the Y axis (9)

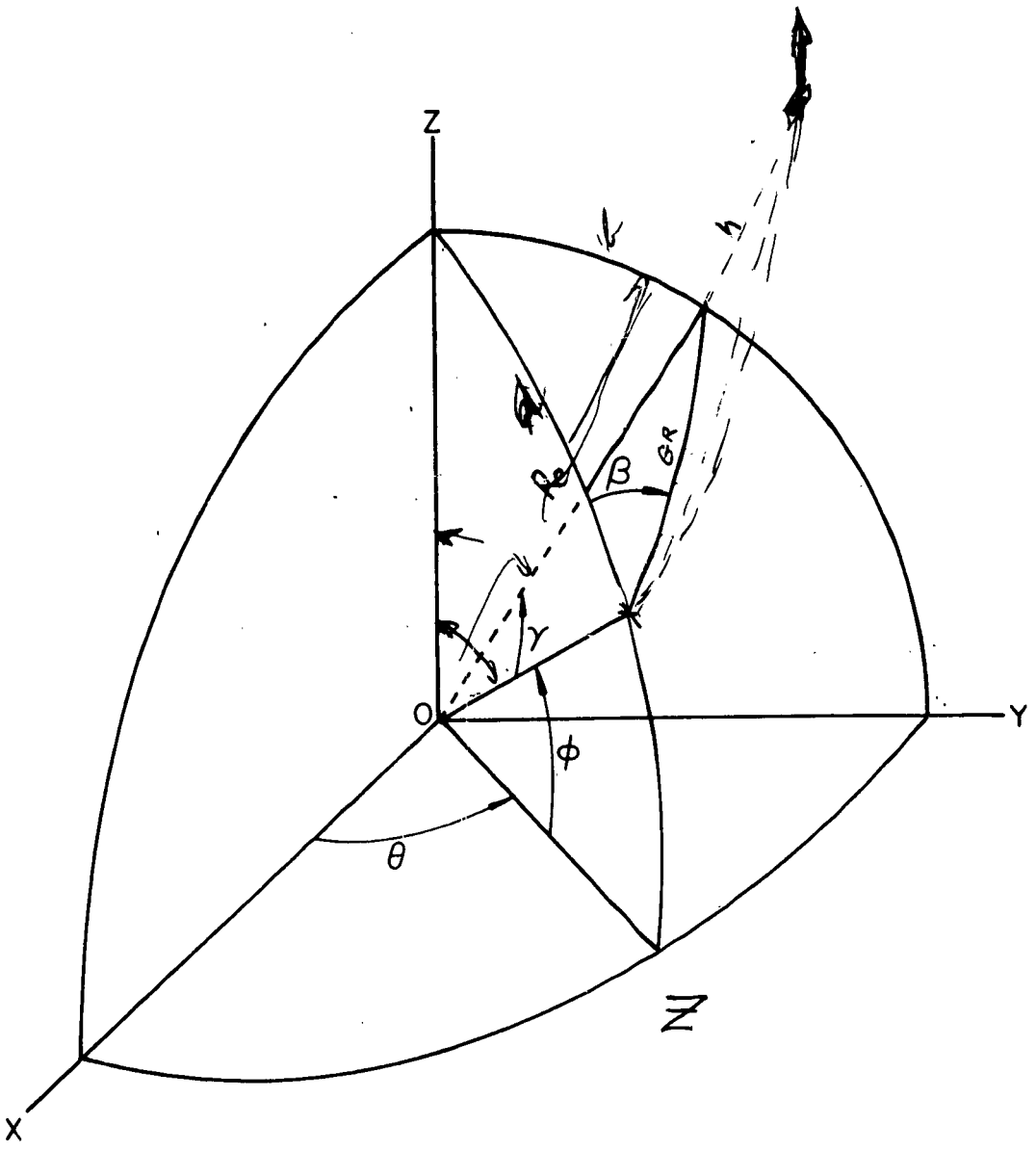

FIGURE 1

$V_t \sin\delta \cos\phi \cos\theta$ = a velocity component along the X axis (10)

$V_t \cos\delta$ = a velocity component parallel to the earth's surface (11)

$V_t \cos\delta \sin\beta$ = a velocity component along a parallel of latitude (12)

$V_t \cos\delta \sin\beta \sin\theta$ = a velocity component along the X axis (13)

$V_t \cos\delta \sin\beta \cos\theta$ = a velocity component along the Y axis (14)

$V_t \cos\delta \cos\beta$ = a velocity component along a meridian of longitude (15)

$V_t \cos\delta \cos\beta \sin\phi$ = a velocity component along R_a projected into the plane of the Equator (16)

$V_t \cos\delta \cos\beta \sin\phi \sin\theta$ = a velocity component along the Y axis (17)

$V_t \cos\delta \cos\beta \sin\phi \cos\theta$ = a velocity component along the X axis (18)

$V_t \cos\delta \cos\beta \cos\phi$ = a velocity component along the Z axis (19)

The following three equations are integral parts of the computer program. The signs (+ or -) of the sin and cos functions of δ, β, ϕ, and θ were analyzed as the angles changed. The proper sign was given to the components used.

Combining (10), (13), and (18):

$$V_x = V_t (\sin\delta \cos\phi \cos\theta - \cos\delta \sin\beta \sin\theta - \cos\delta \cos\beta \sin\phi \cos\theta) \quad (20)$$

Combining (9), (14), and (17):

$$V_y = V_t (\sin\delta \cos\phi \sin\theta + \cos\delta \sin\beta \cos\theta - \cos\delta \cos\beta \sin\phi \sin\theta) \quad (21)$$

Combining (7) and (19):

$$V_z = V_t (\sin \delta \sin \phi + \cos \delta \cos \beta \cos \phi) \tag{22}$$

The component velocities can be used to find the velocity along the trajectory.

$$V_t = (V_x^2 + V_y^2 + V_z^2)^{\frac{1}{2}} \tag{23}$$

If one takes into account the air resistance, the variation of the gravitational and centrifugal field and earth's rotation, the equation of motion for the ballistic vehicle becomes:

$$m\ddot{\bar{r}} = m\bar{g} + \bar{W} + \bar{k}_c + k_n \tag{24}$$

where

m = mass of vehicle

$\bar{r}$ = radius vector from center of earth to vehicle

$\bar{g}$ = acceleration due to gravity

$\bar{W}$ = air resistance

$\bar{k}_c$ = Coriolis force

$\bar{k}_n$ = centrifugal force

Examining equation (24) term by term, one obtains:

$$m\bar{g} = -\frac{m u^2}{R_a^2} \frac{\bar{r}}{R_a} \tag{25}$$

where

$$u^2 = g_o R^2$$

R = radius of earth

R_a = distance from earth's center to vehicle

$$\overline{W} = -\overline{v}\, c\, v^{n-1} \tag{26}$$

where c and n are factors which depend on air density, the shape of the vehicle and the velocity;

$$\overline{k}_c = 2m\,(\overline{v} \times \overline{U}) \tag{27}$$

where

$\overline{U}$ = angular velocity of the rotation of earth in radians per second

and

$$\overline{k_n} = m\,U^2\, r \cos\phi = m\,U^2\,(X^2 + Y^2)^{\frac{1}{2}} \tag{28}$$

In this analysis, the air resistance was assumed to be proportional to the square of velocity so that equation (26) becomes

$$\overline{W} = \frac{\overline{v}\,\rho\, g\, V\, m}{2\left(\frac{w}{C_D A}\right)} \tag{29}$$

Writing equations (25) through (29) in component form, we obtain:

$$A_x = -\frac{u^2 X}{R_a^3} - \frac{\rho\, V_t\, g\, V_x}{2\left(\frac{w}{C_D A}\right)} + 2\,V_y U + U^2 X \tag{30}$$

$$A_y = -\frac{u^2 Y}{R_a^3} - \frac{\rho\, V_t\, g\, V_y}{2\left(\frac{w}{C_D A}\right)} - 2\,V_x U + U^2 Y \tag{31}$$

$$A_z = -\frac{u^2 Z}{R_a^3} - \frac{\rho V_t g V_z}{2\left(\frac{w}{C_D A}\right)} \tag{32}$$

Integrating these equations in computer form, we obtain

$$V_{x_n} = V_{x(n-1)} + A_x \Delta t \tag{33}$$

$$V_{y_n} = V_{y(n-1)} + A_y \Delta t \tag{34}$$

$$V_{z_n} = V_{z(n-1)} + A_z \Delta t \tag{35}$$

$$X_n = X_{n-1} + V_x \Delta t \tag{36}$$

$$Y_n = Y_{n-1} + V_y \Delta t \tag{37}$$

$$Z_n = Z_{n-1} + V_z \Delta t \tag{38}$$

From Figure 1, the relationships pertaining to the angles are:

$$\phi = \arcsin \frac{Z}{R_a} \tag{39}$$

$$\theta = \arctan \frac{Y}{X} \tag{40}$$

$$\delta = \arcsin \frac{\Delta R_a/\Delta t}{V_t} \quad \text{where } \Delta R_a/\Delta t = \text{average rate of change in altitude} \tag{41}$$

In spherical trigonometry, the law of cosines states:

$$\cos a = \cos b \cos c + \sin b \sin c \cos A \tag{42}$$

The law of sines states:

$$\frac{\sin A}{\sin a} = \frac{\sin B}{\sin b} = \frac{\sin C}{\sin c} \tag{43}$$

where angles A, B, and C represent the angles of the spherical triangle on the earth's surface and a, b, and c represent the sides of the triangle and the angles subtended by them at earth's center. See Figure 2.

Now refer to Figure 3.

$$\cos \gamma = \cos Co\phi_o \cos Co\phi + \sin Co\phi_o \sin Co\phi \cos \Delta\theta \tag{44}$$

where

$\Delta\theta = \theta - \theta_o$ and

$Co\,\phi_o = 90° - \phi_o$, then $\cos Co\,\phi_o = \sin \phi_o$ and $\sin Co\phi_o = \cos \phi_o$

$Co\phi = 90° - \phi$, then $\cos Co\phi = \sin \phi$ and $\sin Co\phi = \cos \phi$

Equation (44) then becomes

$$\cos \gamma = \sin \phi_o \sin \phi + \cos \phi_o \cos \phi \cos \Delta\theta \tag{45}$$

$$\gamma = \arccos(\sin \phi_o \sin \phi + \cos \phi_o \cos \phi \cos \Delta\theta) \tag{46}$$

Then range = γR, γ is in radians. Earth's radius, R = 3440.239 nautical miles.

$$\text{Range} = \gamma\,(3440.239) \tag{47}$$

Refer again to Figure 3.

$$\frac{\sin \sigma}{\sin Co\phi_o} = \frac{\sin \Delta\theta}{\sin \gamma} \qquad \text{but } \sin Co\phi_o = \cos \phi_o \tag{48}$$

$$\sin \sigma = \frac{\cos \phi_o \sin \Delta\theta}{\sin \gamma} \tag{49}$$

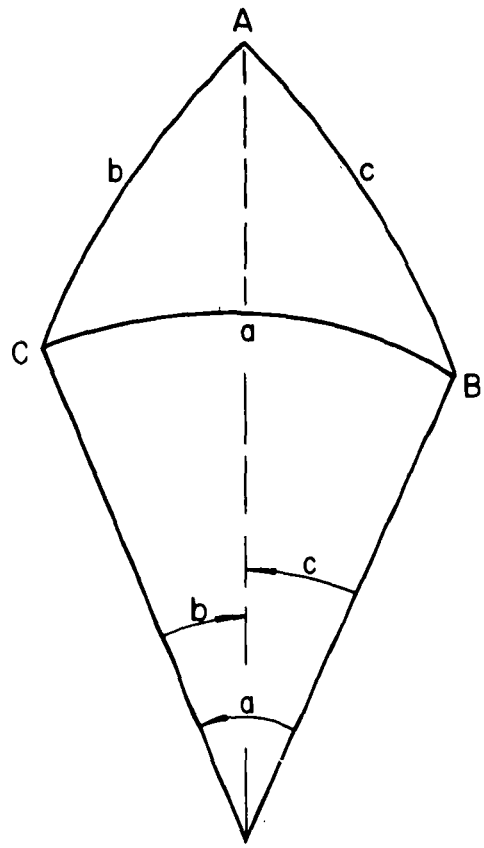

FIGURE 2

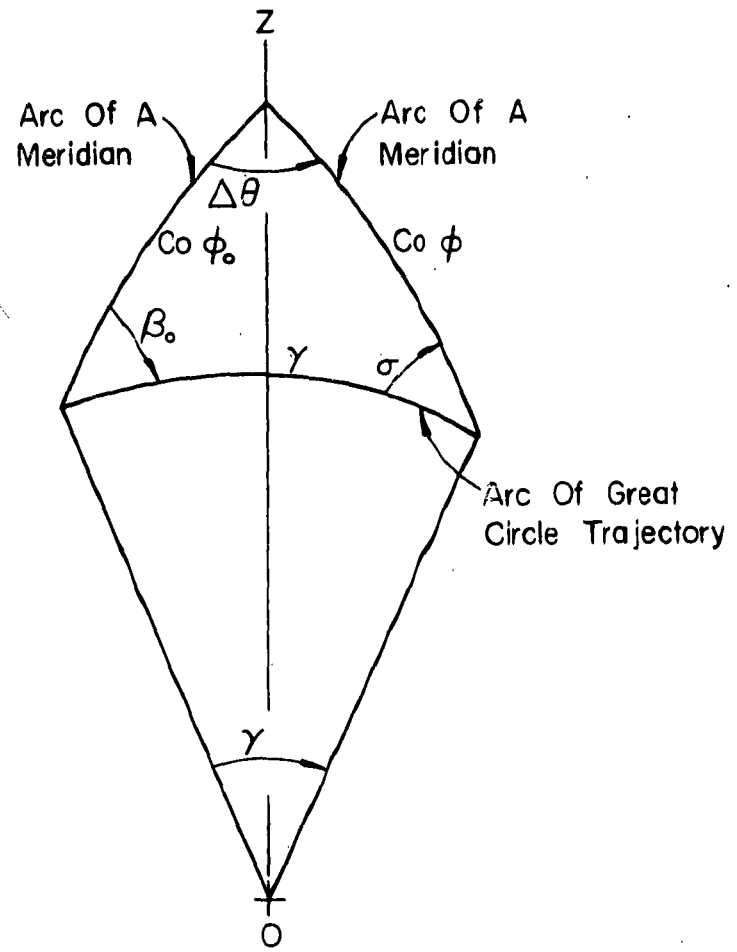
Z
Arc Of A Meridian
Arc Of A Meridian
$\Delta\theta$
Co ϕ_o
Co ϕ
β_o
γ
σ
Arc Of Great Circle Trajectory
γ
O

FIGURE 3

$$\sigma = \arcsin\left(\frac{\cos \phi_o \sin \Delta\theta}{\sin \gamma}\right) \tag{50}$$

Sigma (σ) is used to compute bearing (β). In order to minimize the error caused by assuming that the trajectory follows an exact great circle (it would follow an exact great circle if the earth were not rotating), a smaller spherical triangle is used in the computer program.

Let symbols with subscript 1 stand for the next to last values computed. The symbols without subscripts stand for the newest values computed. Let γ_3 equal the range increment angle.

Equation (46) now becomes:

$$\gamma_3 = \arccos\left[\sin \phi_1 \sin \phi + \cos \phi_1 \cos \phi \cos (\theta - \theta_1)\right] \tag{51}$$

Equation (50) becomes

$$\sigma = \arcsin\left(\frac{\cos \phi_1 \sin (\theta - \theta_1)}{\sin \gamma_3}\right) \tag{52}$$

The computer uses the tangent function to determine the value of sigma (σ). The value determined will lie between -90° and +90°. A graph showing sigma plotted against beta is shown in Figure 4.

From Figure 4 we can see that if beta is between 0 and 90°

$$\beta = \sigma \tag{53}$$

If beta is between 90° and 270°,

$$\beta = \pi - \sigma \tag{54}$$

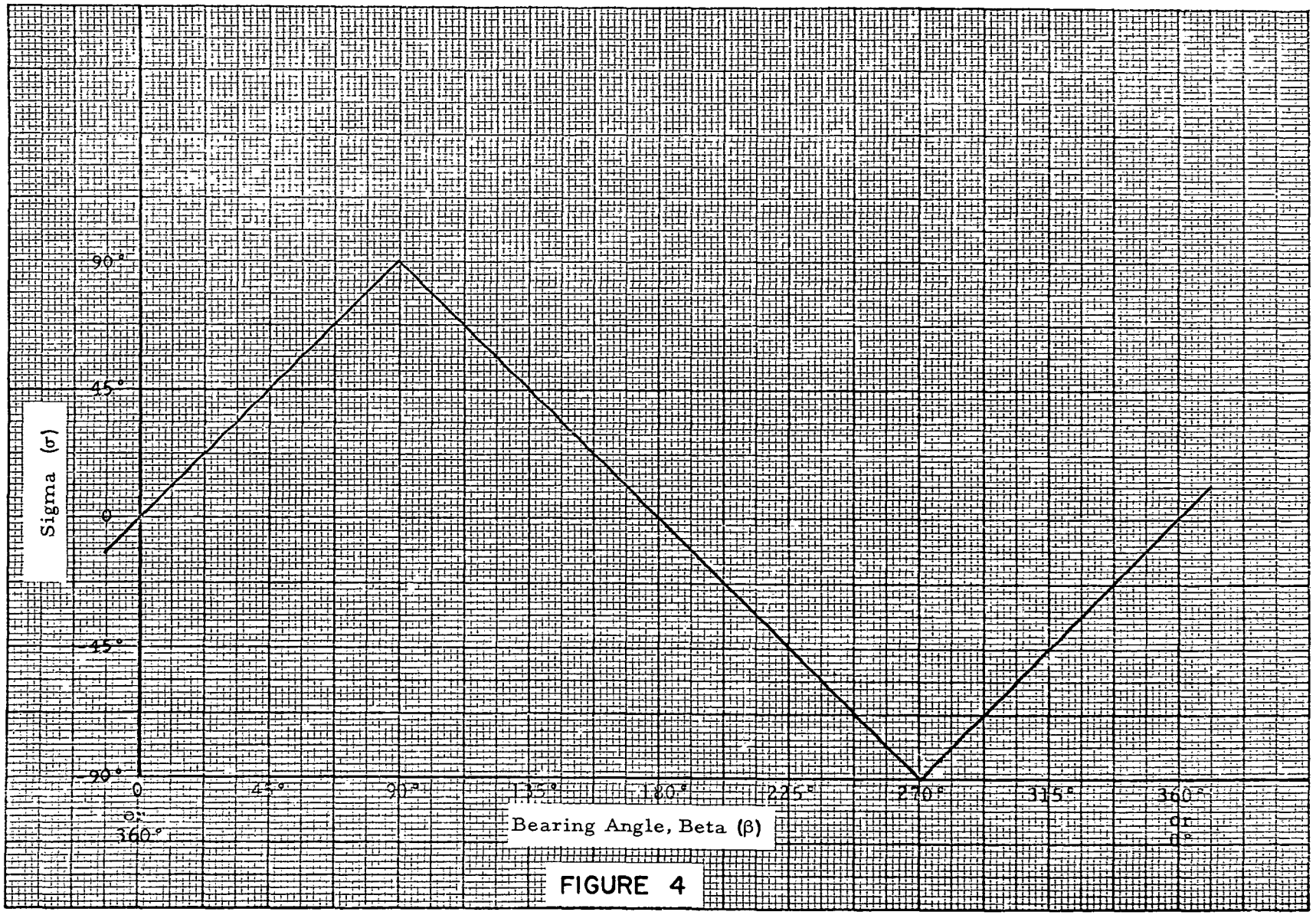
90°
45°
0
-45°
-90°
Sigma (σ)
0
360°
45°
90°
135°
180°
225°
270°
315°
360°
or
0°
Bearing Angle, Beta (β)

FIGURE 4

If beta is greater than 270°,

$$\beta = 2\pi + \sigma \tag{55}$$

The five equations (51) through (55) are integral parts of the computer program.

In order to compute A_t, which is the acceleration along the trajectory, let V_t = the last velocity computed along the trajectory,

V_{t_1} = the next to last velocity computed along the trajectory

Δt = the time increment being used the computer

then

$$A_t = \frac{V_t - V_{t_1}}{\Delta t} \tag{56}$$

DISCUSSION

The computer program assumes a spherical earth and a point-mass. Other conditions are those which actually exist at earth's surface and at altitude from the surface.

The time increment used by the computer is one second during the portion of the trajectory where conditions change slowly. During the re-entry portion of the trajectory when the altitude of the re-entry body is below 150,000 feet, the time increment is decreased to 0.1 second to increase accuracy. In order to give desired accuracy, this program was written in double precision. The program uses about 39,950 digits of memory. It is believed that this program produces highly accurate results.

For some of the angle relationships, it is assumed that the trajectory follows an exact great circle. The errors caused by this assumption are very small because of the short time increments used and the methods chosen to compute these relationships. These relationships are computer outputs and are not used to drive the computer.

FLOW CHART FOR FREE FLIGHT AND RE-ENTRY TRAJECTORY

Read Input Data

Set Counters
RN = 0
CON 8 = 0
CON 15 = 0
CON 1 = 0
AACC = 0
CONTR = 0
AABB = 1
Sense Light 1

Initial Values
$\beta_1 = \beta - .001$
ALT 9 = 1000.
$V_t = V_o$
$V_{t1} = V_o$
$u = \sqrt{G_o R^2}$
IPAGE = 1
$\beta_o = \beta$
$\theta_o = \theta$
$\phi_o = \phi$
RA = R + ALT

$V_x = V_o \sin\delta \cos\phi \cos\theta - V_o \cos\delta \cos\beta \sin\phi \cos\theta - V_o \cos\delta \sin\beta \sin\theta$
$V_y = V_o \sin\delta \cos\phi \sin\theta - V_o \cos\delta \cos\beta \sin\phi \sin\theta + V_o \cos\delta \sin\beta \cos\theta$
$V_z = V_o \sin\delta \sin\phi + V_o \cos\delta \cos\beta \cos\phi$

$X = RA \cos\phi \cos\theta$
$Y = RA \cos\phi \sin\theta$
$Z = RA \sin\phi$

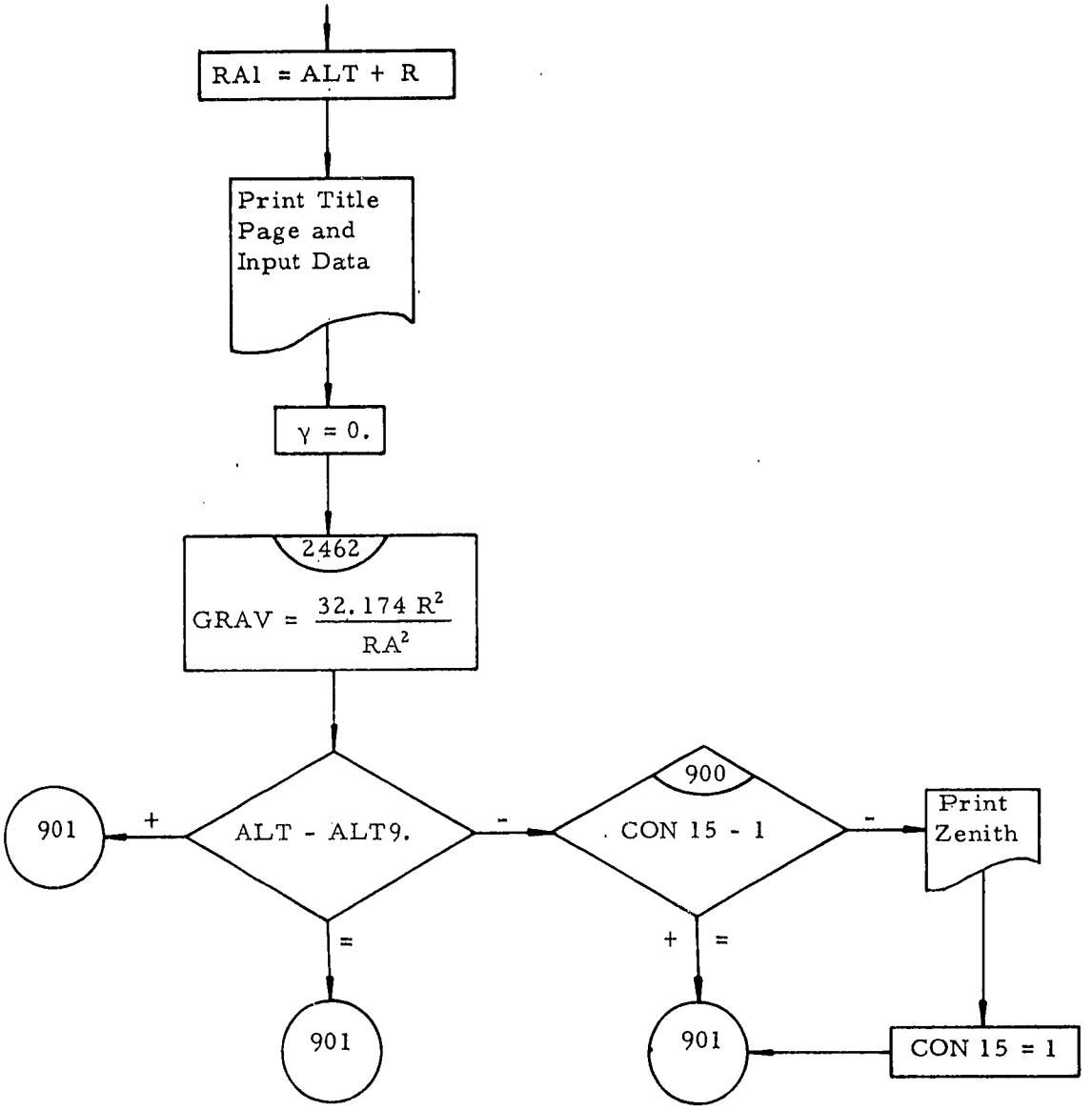
RA1 = ALT + R
Print Title Page and Input Data
γ = 0.
2462
GRAV = 32.174 R² / RA²
ALT - ALT9.
+
901
=
901
-
900
CON 15 - 1
-
Print Zenith
+
=
901
CON 15 = 1

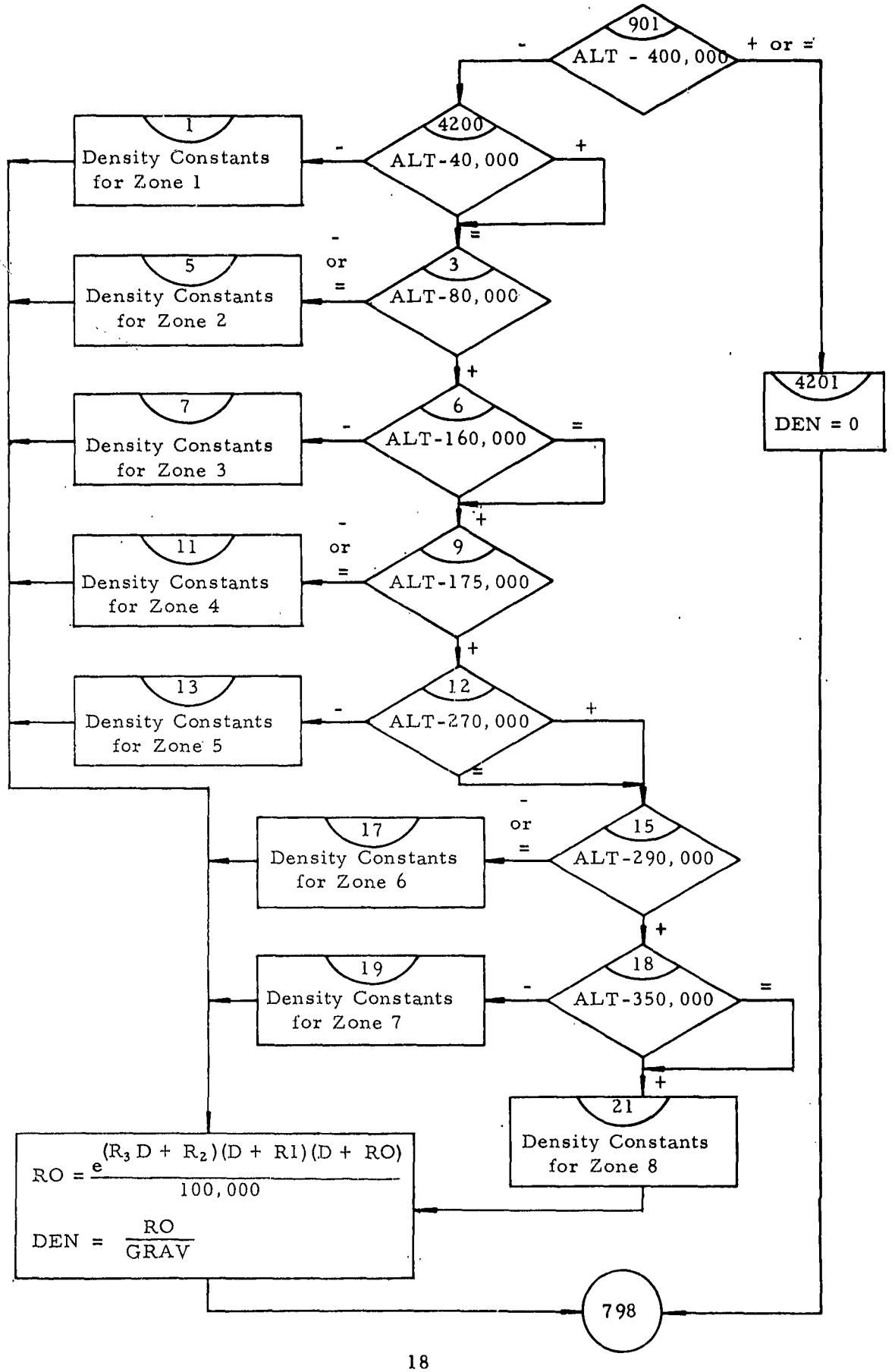

$$RO = \frac{e^{(R_3 D + R_2)(D + R1)(D + RO)}}{100,000}$$

$$DEN = \frac{RO}{GRAV}$$

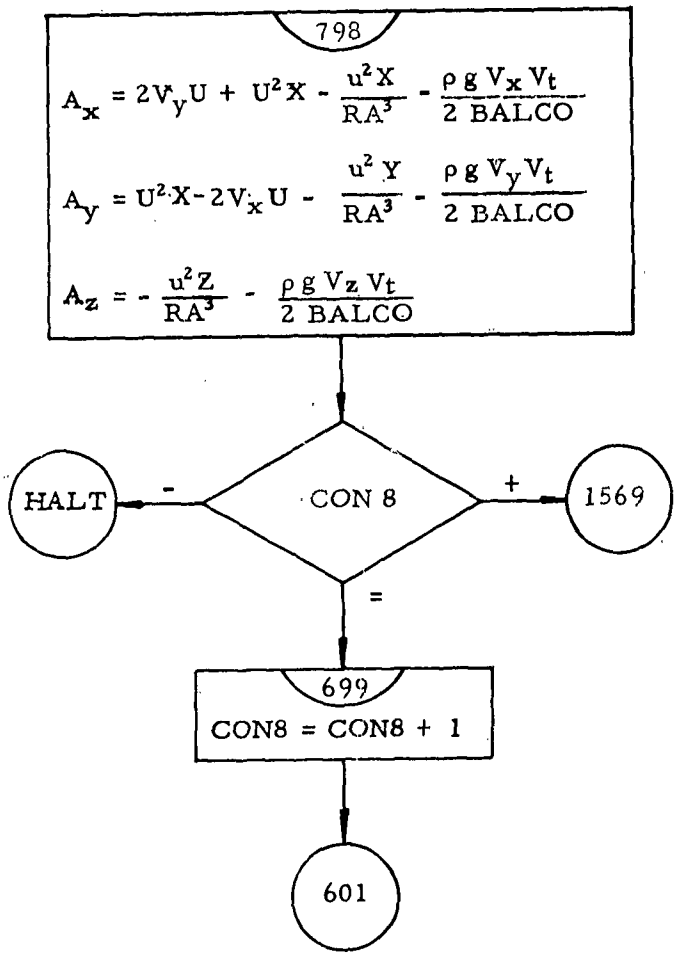

(601 on page 23)

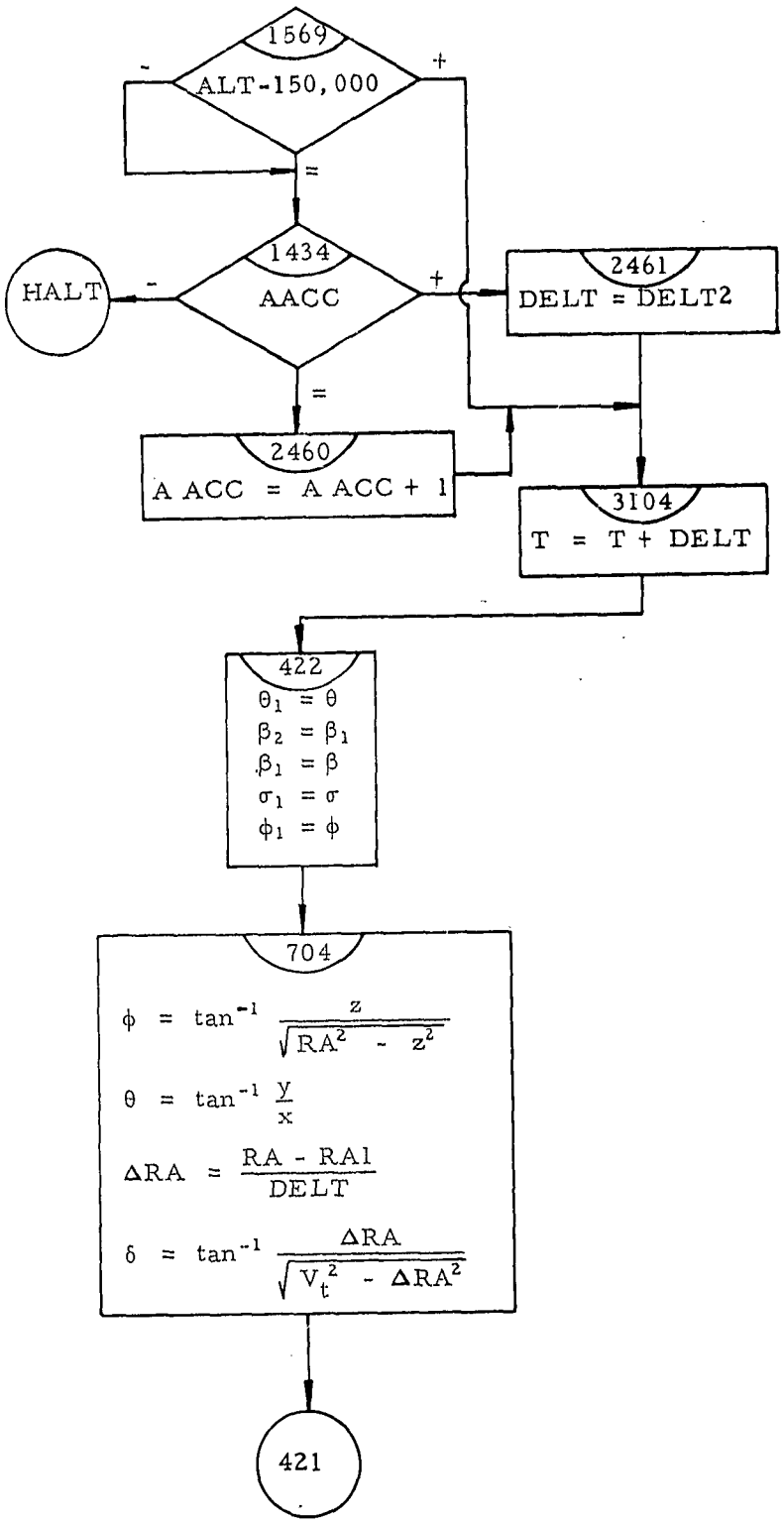
1569
ALT-150,000
-
+
=
1434
AACC
HALT
-
+
=
2461
DELT = DELT2
2460
A ACC = A ACC + 1
3104
T = T + DELT
422
$\theta_1 = \theta$
$\beta_2 = \beta_1$
$\beta_1 = \beta$
$\sigma_1 = \sigma$
$\phi_1 = \phi$
704
$\phi = \tan^{-1} \frac{z}{\sqrt{RA^2 - z^2}}$
$\theta = \tan^{-1} \frac{y}{x}$
$\Delta RA = \frac{RA - RA1}{DELT}$
$\delta = \tan^{-1} \frac{\Delta RA}{\sqrt{V_t^2 - \Delta RA^2}}$
421

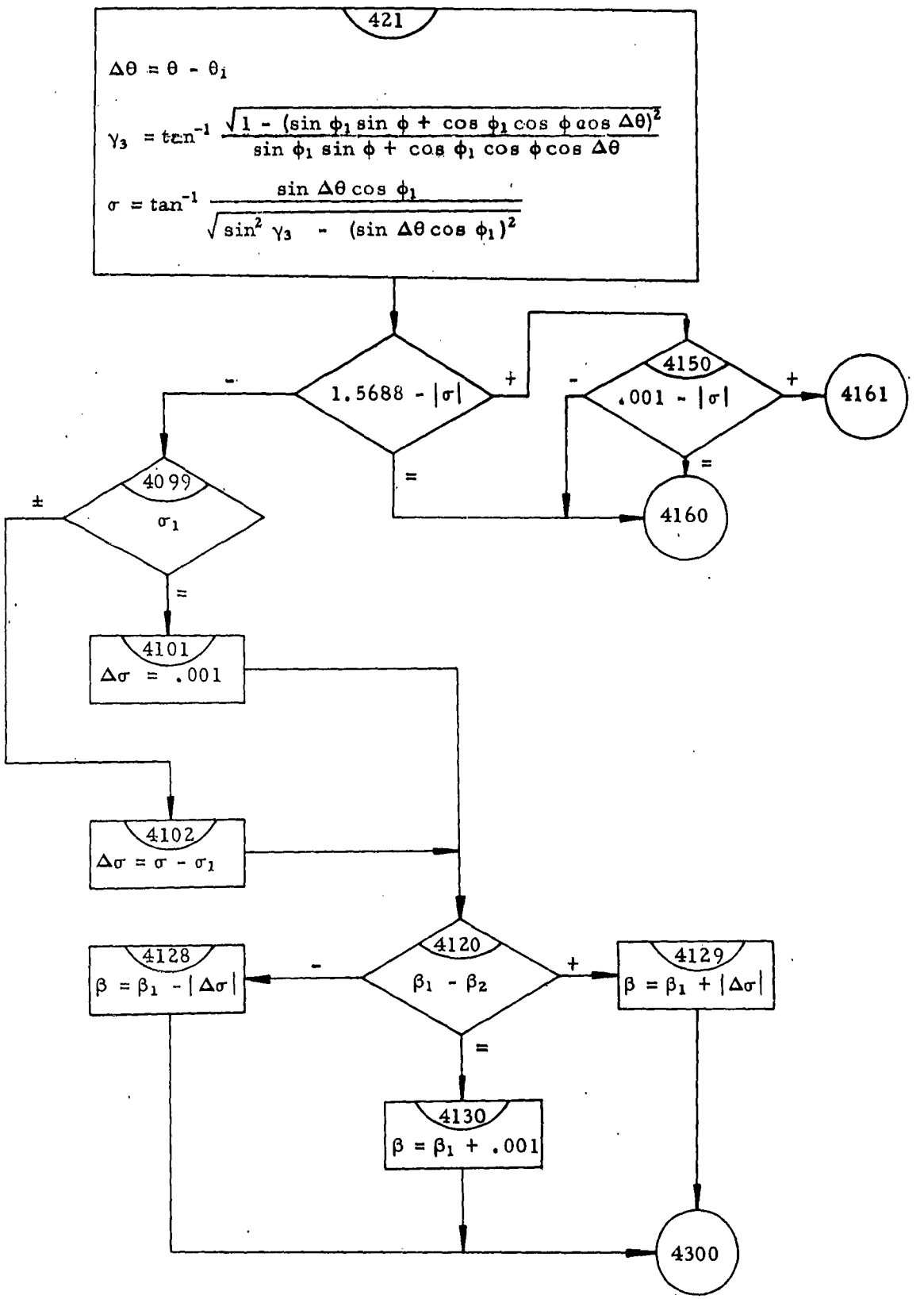

(4300 - middle of next page)

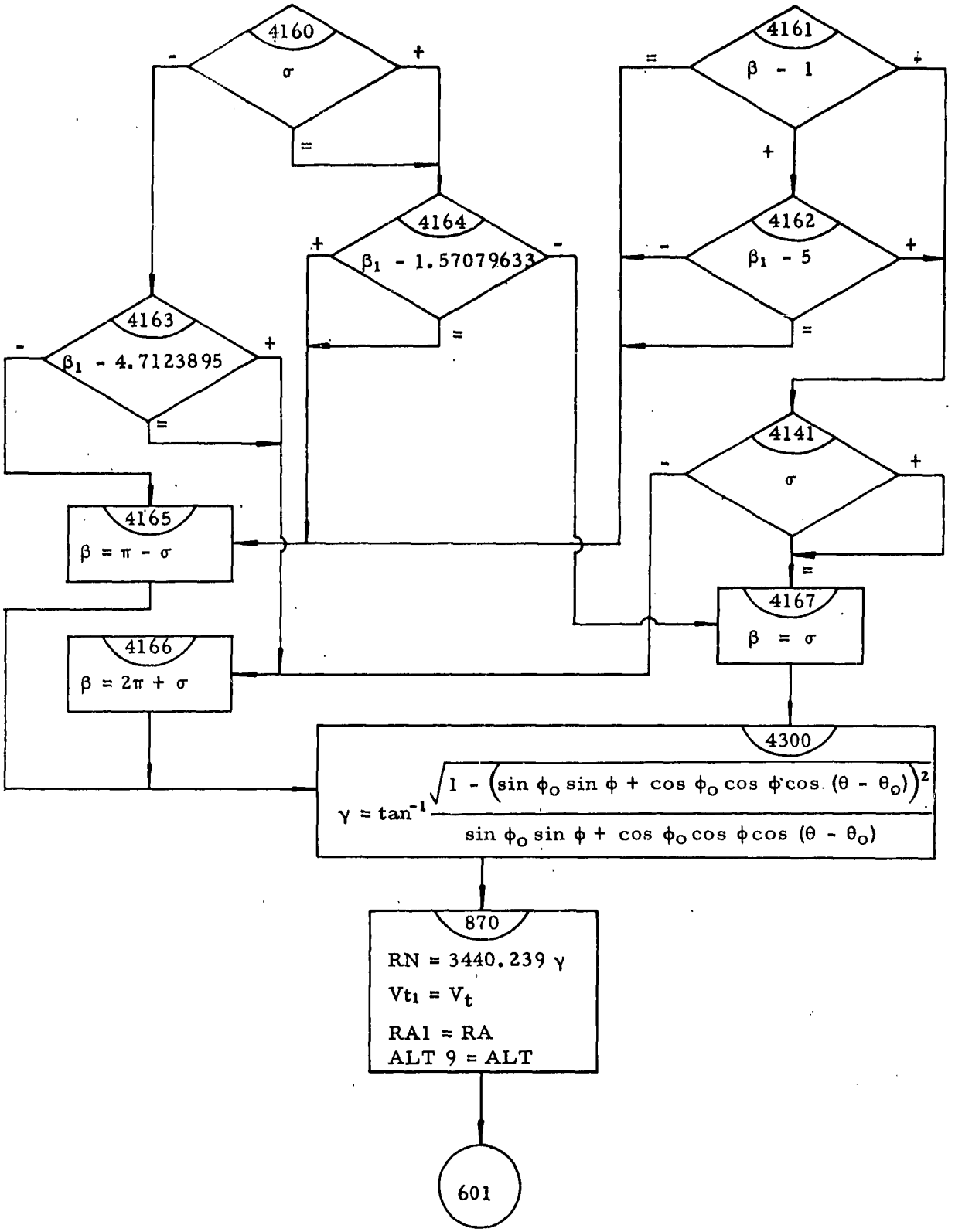
4160
σ
4161
β - 1
4164
β1 - 1.57079633
4162
β1 - 5
4163
β1 - 4.7123895
4141
σ
4165
β = π - σ
4166
β = 2π + σ
4167
β = σ
4300
γ = tan⁻¹ √(1 - (sin φo sin φ + cos φo cos φ cos (θ - θo))²) / (sin φo sin φ + cos φo cos φ cos (θ - θo))
870
RN = 3440.239 γ
Vt1 = Vt
RA1 = RA
ALT 9 = ALT
601

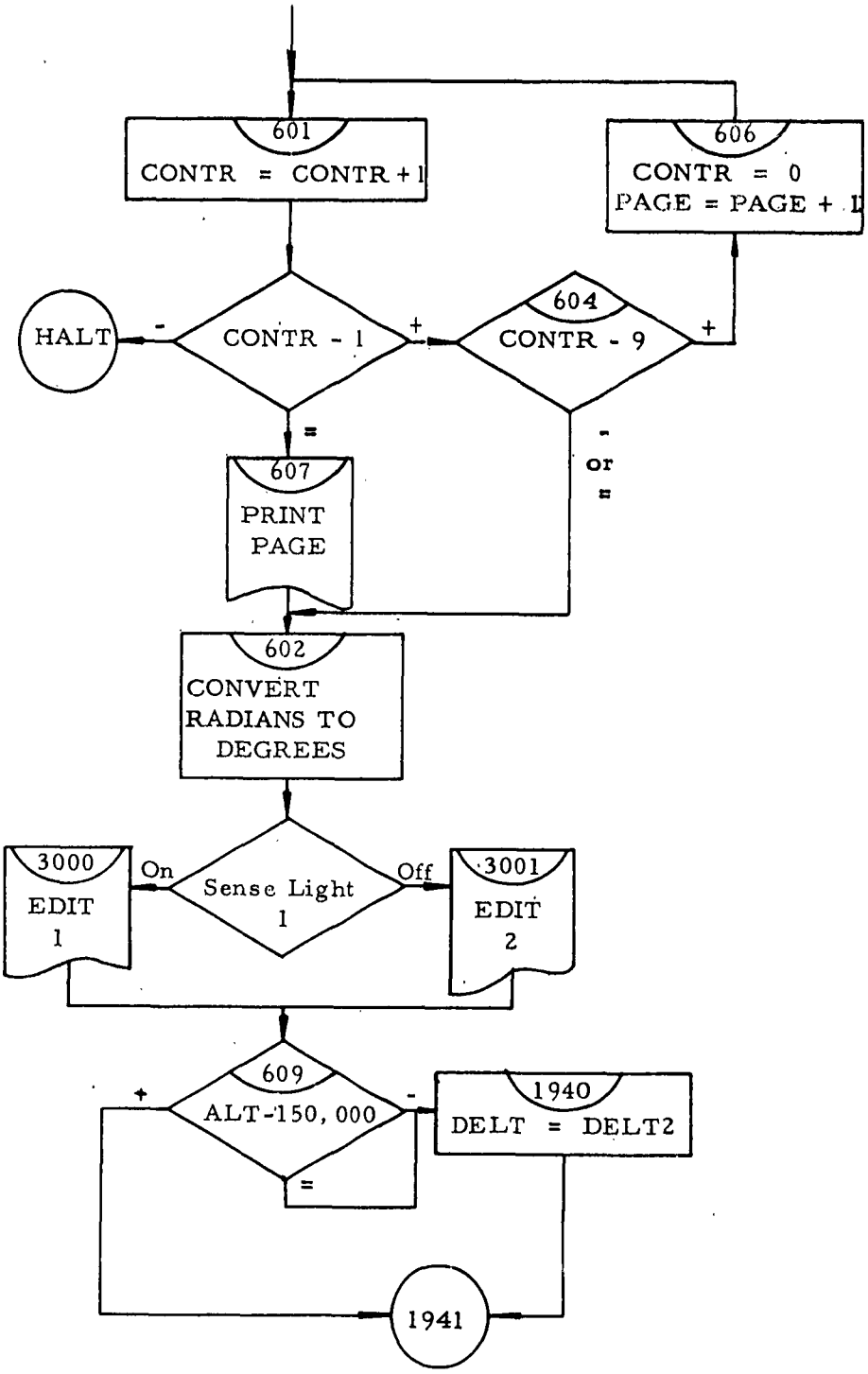
601
CONTR = CONTR + 1
606
CONTR = 0
PAGE = PAGE + 1
HALT
-
CONTR - 1
+
604
CONTR - 9
+
=
-
or
=
607
PRINT
PAGE
602
CONVERT
RADIANS TO
DEGREES
3000
EDIT
1
On
Sense Light
1
Off
3001
EDIT
2
609
ALT-150, 000
+
-
=
1940
DELT = DELT2
1941

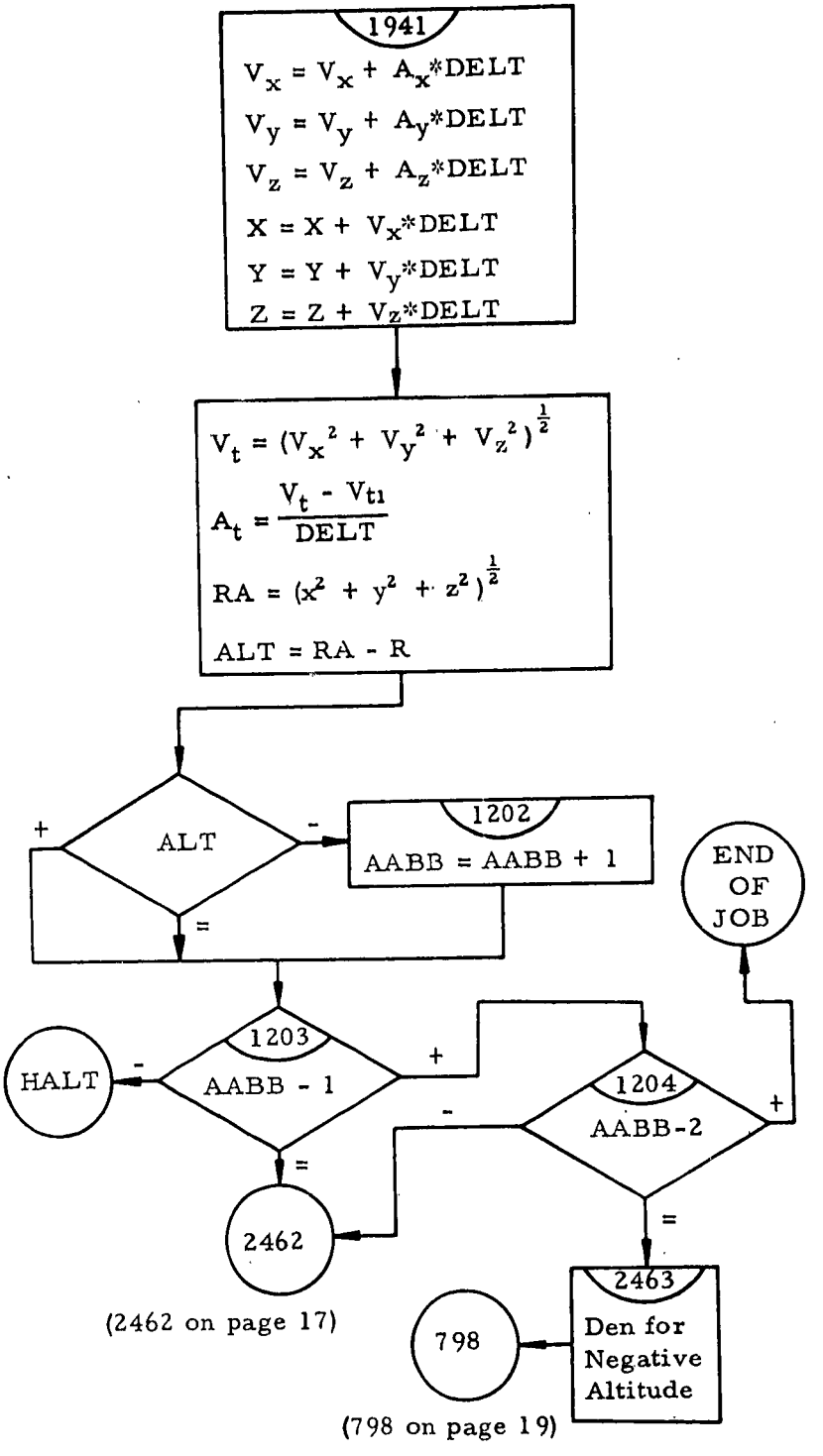
1941
$V_x = V_x + A_x$*DELT
$V_y = V_y + A_y$*DELT
$V_z = V_z + A_z$*DELT
$X = X + V_x$*DELT
$Y = Y + V_y$*DELT
$Z = Z + V_z$*DELT
$V_t = (V_x^2 + V_y^2 + V_z^2)^{\frac{1}{2}}$
$A_t = \frac{V_t - V_{t1}}{DELT}$
$RA = (x^2 + y^2 + z^2)^{\frac{1}{2}}$
ALT = RA - R
ALT
+
-
=
1202
AABB = AABB + 1
END OF JOB
1203
AABB - 1
HALT
-
+
=
1204
AABB-2
-
+
=
2462
(2462 on page 17)
2463
Den for Negative Altitude
798
(798 on page 19)

FORTRAN STATEMENTS

English Units

```
C       FREE FLIGHT AND RE-ENTRY
C       PROGRAMMED BY W.B.WARREN
C       FOR RESEARCH STAFF
C          10 NOVEMBER 1962
C          PROGRAM NO. SP 9 ENGLISH UNITS.
C
C
C
C
C       PHYSICAL CONSTANTS
C         GO # GRAVITATIONAL ACCELERATION AT SEA LEVEL - 32.174 FT/SEC**2
C       U # EARTH ROTATION - %2*PI¤/%24*3600¤  RADIANS/SEC
C         R  # RADIUS OF EARTH - 20,902,890 FEET
C       BALCO # BALLISTIC COEFFICIENT - CONSTANT
C       MU**2 # GO*R**2 # 32.174*20,902,890**2
C
C       OTHER INPUT DATA
C         DEL #ANGLE BETWEEN HORIZONTAL AND MISSILE AXIS--POSITIVE UP
C         BETA #AZIMUTH ANGLE CLOCKWISE FROM NORTH TO MISSILE AXIS
C         THETA #LONGITUDE OF MISSILE
C         PHI   #LATITUDE OF MISSILE
C         H     #HEIGHT OF MISSILE ABOVE EARTH SURFACE
C       RHO #ATMOSPHERIC DENSITY --TABLE
C       RA # MISSILE ALTITUDE FROM CENTER OF EARTH
C       VO # MISSILE BURNOUT VELOCITY #VT AT T#0
        READ 100,DEL,BETA,THETA,PHI,ALT
        READ100,R,VO,GO,U,BALCO
        READ 100,T,DELT,DELT2
        CON8 # 0.
        SENSE LIGHT 1
        CON15 # 0.
        CON1 # 0.
        AACC # 0.
        CONTR#0.
        AABB # 1.
        BETA1# BETA - .001
        ALT9 #1000.
        RN#0.
        VT # VO
        VT1 #VO
        AMU # SQRTF%GO*R**2¤
        IPAGE # 1
        BETAO # BETA
        THETO # THETA
        PHIC # PHI
        RA # ALT&R
       OVX #VO*SINF%DEL¤*COSF%PHI¤*COSF%THETA¤-VO*COSF%DEL¤*COSF%BETA¤*SIN
       1F%PHI¤*COSF%THETA¤-VO*COSF%DEL¤*SINF%BETA¤*SINF%THETA¤
       OVY #VO*SINF%DEL¤*COSF%PHI¤*SINF%THETA¤-VO*COSF%DEL¤*COSF%BETA¤*SIN
```

```
     1F%PHI¤*SINF%THETA¤&VO*COSF%DEL¤*SINF%BETA¤*COSF%THETA¤
     OVZ #VO*SINF%DEL¤*SINF%PHI¤&VO*COSF%DEL¤*COSF%BETA¤*COSF%PHI¤
      X #RA*COSF%PHI¤*COSF%THETA¤
      Y #RA*COSF%PHI¤*SINF%THETA¤
      Z # RA*SINF%PHI¤
      RA1 # ALT & R
      PRINT 4999,IPAGE
      PRINT 5000
      PRINT 5001
      PRINT 5027
      PRINT 5002
      PRINT 5003
      PRINT 5004
      PRINT 5010
      PRINT 5011
      PRINT 5012
      PRINT 5013
      PRINT 5014
      PRINT 5015,DEL,BETA,THETA,PHI
      PRINT 5016,ALT,BALCO,RA,VO
      GAMMA # 0.
 2462 GRAV # %32.174*R**2¤/RA**2
      IF %ALT - ALT9¤900,901,901
  900 IF %CON15 - 1.¤3840,901,901
 3840 PRINT 5050
 5050 FORMAT %1HK,35X,6HZENITH¤
      CON15 # 1.
  901 IF %ALT-400000.¤4200,4201,4201
 4200 IF %ALT - 4C000.¤1,2,3
    1 D # ALT/10000.
      R3# -0.37728875E-02
      R2#  0.52352523E-02
      R1# -0.31047929E&00
      RO#  0.89444960E&01
      GO TO 50
    2 CONTINUE
    3 IF %ALT-80C00.¤4,5,6
    4 CONTINUE
    5 D # %ALT-40000.¤/10000.
      R3# 0.23298604E-05
      R2# 0.21620268E-03
      R1#-0.47974207E&00
      RO# 0.75402419E&01
      GO TO 50
    6 IF %ALT - 160000.¤7,8,9
    7 D # %ALT-80000.¤/10000.
      R3#  0.26359811E-04
      R2#  0.80943560E-02
      R1# -0.51509227E&00
      RO#  0.56272847E&01
      GO TO 50
    8 CONTINUE
    9 IF %ALT-175000.¤10,11,12
```

```
   10 CONTINUE
   11 D #%ALT-160000.¤/10000.
      R3#-0.57066660E-04
      R2# 0.30080CC0E-03
      R1#-0.36384173E&00
      R0# 0.20423758E&01
      GO TO 50
   12 IF %ALT-270000.¤13,14,15
   13 D # %ALT-175000.¤/10000.
      R3# -0.84014648E-03
      R2# -0.16797257E-02
      R1# -0.32931657E&00
      R0#  0.15021266E&01
      GO TO 50
   14 CONTINUE
   15 IF %ALT-290000.¤16,17,18
   16 CONTINUE
   17 D # %ALT-270000.¤/10000.
      R3# 0.
      R2# 0.36480009E-03
      R1#-0.61376240E&00
      R0#-0.25094864E&01
      GO TO 50
   18 IF %ALT-350000.¤19,20,21
   19 D # %ALT-290000.¤/10000.
      R3#  0.17070042E-02
      R2# -0.16579218E-02
      R1# -0.63898718E&00
      R0# -0.37292327E&01
      GO TO 50
   20 CONTINUE
   21 D # %ALT-350000.¤/10000.
      R3# -0.38550824E-02
      R2#  0.65901945E-01
      R1# -0.68705559E&00
      R0# -0.72589563E&01
   50 R0#%EXPF%%%R3*D&R2¤*D&R1¤*D&R0¤¤/100000.
      DEN # R0/GRAV
 7980AX#2.*VY*U&U**2*X-%%AMU**2*X¤/RA**3¤-%%DEN*GRAV  *VX*VT¤/%2.*BALCO
     1¤¤
     0AY#U**2*Y-2.*VX*U-%%AMU**2*Y¤/RA**3¤-%%DEN*GRAV  *VY*VT¤/%2.*BALCO
     1¤¤
      AZ#%-1.¤*%%%AMU**2*Z¤/RA**3¤&%%DEN*GRAV  *VZ*VT¤/%2.*BALCO¤¤¤
      IF %CON8¤4000,699,1569
  699 CON8 # CON8 & 1.
      GO TO 601
 4201 DEN # 0.
      GO TO 798
 1569 IF %ALT -150000.¤1434,1434,3104
 1434 IF %AACC¤4000,2460,2461
 2460 AACC # AACC & 1.
      GO TO 3104
 2461 DELT #DELT2
```

```
3104 T # T & DELT
 422 THET1 # THETA
     BETA2 #BETA1
     BETA1 # BETA
     SIGMA1#SIGMA
     PHI1 # PHI
 704 PHI # ATANF%Z/%SQRTF%RA**2-Z**2¤¤¤
     THETA #ATANF%Y/X¤
     DELRA # %RA - RA1¤/DELT
     DEL # ATANF%%DELRA¤/%SQRTF%VT**2-DELRA**2¤¤¤
 421 DTHET#THETA -THET1
     GAMMA3# ATANF%%SQRTF%1.-%%SINF%PHI1¤*SINF%PHI¤¤&%COSF%PHI1¤*COSF%P
    1HI¤*COSF%DTHET¤¤¤**2¤¤/%SINF%PHI1¤*SINF%PHI¤&COSF%PHI1¤*COSF%PHI¤*
    2COSF%DTHET¤¤¤
     SIGMA # ATANF%%SINF%DTHET¤*COSF%PHI1¤¤/%SQRTF%%SINF%GAMMA3¤¤**2-%S
    1INF%DTHET¤*COSF%PHI1¤¤**2¤¤¤
     IF %1.5688 - %ABSF%SIGMA¤¤¤4099,4160,4150
4099 IF %SIGMA1¤4102,4101,4102
4101 DELSIG # .001
     GO TO 4120
4102 DELSIG # SIGMA -SIGMA1
4120 IF%BETA1-BETA2¤4128,4130,4129
4128 BETA# BETA1-%ABSF%DELSIG¤¤
     GO TO 4300
4130 BETA# BETA1&.001
     GO TO 4300
4129 BETA# BETA1 &%ABSF%DELSIG¤¤
     GO TO 4300
4150 IF %.C01-%ABSF%SIGMA¤¤¤4160,4160,4161
4161 IF %BETA - 1.¤4141,4165,4162
4141 IF %SIGMA¤4166,4167,4167
4162 IF %BETA1 - 5.¤4165,4165,4141
4160 IF %SIGMA¤ 4163,4164,4164
4163 IF %BETA1-4.7123895¤4165,4166,4166
4165 BETA #3.14159265-SIGMA
     GO TO 4300
4166 BETA #6.28318530 & SIGMA
     GO TO 4300
4164 IF %BETA1 - 1.57079632675¤4167,4165,4165
4167 BETA # SIGMA
4300 GAMMA # ATANF%%SQRTF%1.-%%SINF%PHI0¤*SINF%PHI¤¤&%COSF%PHI0¤*COSF%P
    1HI¤*COSF%THETA-THET0¤¤¤**2¤¤/%SINF%PHI0¤*SINF%PHI¤&COSF%PHI0¤*COSF
    2%PHI¤*COSF%THETA-THET0¤¤¤
 870 RN #GAMMA * 3440.239
     VT1#VT
     RA1# RA
     ALT9 #ALT
 601 CONTR #CONTR & 1.
     IF %CONTR -1.¤4000,607,604
 604 IF %CONTR-9.¤602,602,606
 606 CONTR #0.
     IPAGE #IPAGE & 1
     GO TO 601
```

```
 607 PRINT 5017,IPAGE
 602 AA1 #DEL* 57.2958
     AA2 #BETA*57.2958
     AA3 #THETA*57.2958
     AA4 #PHI *57.2958
     PRINT 5005,T,X,Y,Z
     AA6 # SIGMA * 57.2958
     AA7 # GAMMA3 * 57.2958
     PRINT 5006,ALT,VX,VY,VZ
     PRINT 5007,VT,AX,AY,AZ
     PRINT 5008,AA2,RN,DEN,GRAV
     IF %SENSE LIGHT 1¤ 3000,3001
3000 PRINT 5028,AA4,AA3,AA1
     GO TO 609
3001 PRINT 5025,AA4,AA3,AA1,AT
 609 IF %ALT - 150000.¤1940,1940,1941
1940 DELT #DELT2
1941 VX # VX & AX*DELT
     VY # VY & AY * DELT
     VZ # VZ & AZ * DELT
     X # X & VX * DELT
     Y # Y & VY * DELT
     Z # Z & VZ * DELT
     VT # SQRTF%VX**2 & VY**2 & VZ**2¤
     AT #%VT-VT1¤/DELT
     RA # SQRTF%X**2 & Y**2 & Z**2¤
     ALT #RA - R
     IF %ALT¤1202,1203,1203
1202 AABB # AABB & 1.
1203 IF %AABB-1.¤4000,2462,1204
1204 IF %AABB-2.¤2462,2463,8000
2463 DEN #.002376&%%ALT/%-5000.¤¤*%.0027448-.0023769¤¤
     GO TO 798
5028 FORMAT %1H ,2X,5HPHI   ,E15.8,2X,5HTHETA,E15.8,2X,5HDELTA,E15.8¤
 100 FORMAT %5E15.8¤
5010 FORMAT %1HK,25X,42HPHYSICAL CONSTANTS -SAME FOR ALL MISSILES-¤
5011 FORMAT %1H ,25X,57HGRAVITATIONAL ACCELERATION AT SEA LEVEL  32.174
    1 FT/SEC**2¤
5012 FORMAT %1H ,30X,44HEARTH ROTATION  2PI/24 X 3600 RADIANS/SECOND¤
5013 FORMAT %1H ,30X,32HRADIUS OF EARTH  20,902,890 FEET¤
5014 FORMAT %1HK,5X,12HOTHER INPUTS¤
5015 FORMAT     %1H ,5HDEL  ,E15.8,2X,5HBETA ,E15.8,2X,5HTHETA,E15.8,2X
    1,5HPHI  ,E15.8¤
5016 FORMAT     %1H ,5HALT  ,E15.8,2X,5HBALCO,E15.8,2X,5HRA   ,E15.8,2X
    1,5HVO   ,E15.8¤
5017 FORMAT %1H1,79X,5HPAGE ,I4¤
8000 PRINT 8001
8001 FORMAT %1H1,/////////20X,32H********END OF JOB********//1H1¤
4999 FORMAT %1H1,32X,31HBROWN ENGINEERING COMPANY, INC.,4X,5HPAGE ,I4¤
5000 FORMAT %1H ,30X,35HFREE FLIGHT AND RE-ENTRY TRAJECTORY¤
5001 FORMAT %1H ,35X,24HPROGRAMMED BY W.B.WARREN¤
5027 FORMAT %1H ,30X,35HTHEORETICAL DERIVATION - C.F.OSTNER¤
5002 FORMAT %1H ,38X,18H  RESEARCH STAFF  ¤
```

```
5003 FORMAT %1H ,39X,16H10 NOVEMBER 1962¤
5004 FORMAT %1HK,39X,31HPROGRAM NO. SP 9 ENGLISH UNITS.¤
50050FORMAT %1HK,2X,5HTIME ,E15.8,2X,5HX    ,E15.8,2X,5HY    ,E15.8,2X,
    15HZ    ,E15.8¤
5006 FORMAT %1H ,2X,5HALT  ,E15.8,2X,5HVX   ,E15.8,2X,5HVY   ,E15.8,2X,
    15HVZ   ,E15.8¤
5007 FORMAT %1H ,2X,5HVT   ,E15.8,2X,5HAX   ,E15.8,2X,5HAY   ,E15.8,2X,
    15HAZ   ,E15.8¤
5008 FORMAT %1H ,2X,5HBETA ,E15.8,2X,5HRANGE,E15.8,2X,5HDEN  ,E15.8,2X,
    15HGRAV ,E15.8¤
5025 FORMAT %1H ,2X,5HPHI  ,E15.8,2X,5HTHETA,E15.8,2X,5HDELTA,E15.8,2X,
    15HACCEL,E15.8¤
4000 STOP
     END
```

FORTRAN STATEMENTS

Metric Units

CARD TO PRINT 80/80

```
C       FREE FLIGHT AND RE-ENTRY
C       PROGRAMMED BY W.B.WARREN
C       FOR RESEARCH STAFF
C          10 NOVEMBER 1962
C
C
C          PROGRAM NO. SP 9 METRIC UNITS.
C
C
C       PHYSICAL CONSTANTS
C       GO#GRAVITATIONAL ACCELERATION AT SEA LEVEL - 9.80665 METERS/SEC**2
C       U # EARTH ROTATION - %2*PI¤/%24*3600¤  RADIANS/SEC
C         R # RADIUS OF EARTH - 6,371,230 METERS
C       BALCO # BALLISTIC COEFFICIENT - CONSTANT
C       MU**2 # GO*R**2 # 9.80665 * 6,371,230**2
C
C       OTHER INPUT DATA
C         DEL #ANGLE BETWEEN HORIZONTAL AND MISSILE AXIS--POSITIVE UP
C         BETA #AZIMUTH ANGLE CLOCKWISE FROM NORTH TO MISSILE AXIS
C         THETA #LONGITUDE OF MISSILE
C         PHI   #LATITUDE OF MISSILE
C        ALT    #HEIGHT OF MISSILE ABOVE EARTH SURFACE
C       RA # MISSILE ALTITUDE FROM CENTER OF EARTH
C       VO # MISSILE BURNOUT VELOCITY #VT AT T#0
        READ 100,DEL,BETA,THETA,PHI,ALT
        READ100,R,VO,GO,U,BALCO
        READ 100,T,DELT,DELT2
        CON8 # 0.
        SENSE LIGHT 1
        CON15 # 0.
        CON1 # 0.
        AACC # 0.
        CONTR#0.
        AABB # 1.
        BETA1# BETA - .001
        ALT9 #1000.
        RN#0.
        VT # VO
        VT1 #VO
        AMU # SQRTF%GO*R**2¤
        IPAGE # 1
        BETAO # BETA
        THETO # THETA
        PHIC # PHI
        RA # ALT&R
        AK # 16.0184
       OVX #VO*SINF%DEL¤*COSF%PHI¤*COSF%THETA¤-VO*COSF%DEL¤*COSF%BETA¤*SIN
       1F%PHI¤*COSF%THETA¤-VO*COSF%DEL¤*SINF%BETA¤*SINF%THETA¤
       OVY #VO*SINF%DEL¤*COSF%PHI¤*SINF%THETA¤-VO*COSF%DEL¤*COSF%BETA¤*SIN
       1F%PHI¤*SINF%THETA¤&VO*COSF%DEL¤*SINF%BETA¤*COSF%THETA¤
       OVZ #VO*SINF%DEL¤*SINF%PHI¤&VO*COSF%DEL¤*COSF%BETA¤*COSF%PHI¤
        X #RA*COSF%PHI¤*COSF%THETA¤
        Y #RA*COSF%PHI¤*SINF%THETA¤
```

```
      Z # RA*SINF%PHI¤
      RA1 # ALT & R
      PRINT 4999,IPAGE
      PRINT 5000
      PRINT 5001
      PRINT 5027
      PRINT 5002
      PRINT 5003
      PRINT 5004
      PRINT 5010
      PRINT 5011
      PRINT 5012
      PRINT 5013
      PRINT 5014
      PRINT 5015,DEL,BETA,THETA,PHI
      PRINT 5016,ALT,BALCO,RA,V0
      GAMMA # 0.
 2462 GRAV # %GO*R**2¤/RA**2
      IF %ALT - ALT9¤900,901,901
  900 IF %CON15 - 1.¤3840,901,901
 3840 PRINT 5050
 5050 FORMAT %1HK,35X,6HZENITH¤
      CON15 # 1.
  901 ALT # ALT * 3.280833
      IF %ALT-400000.¤4200,4201,4201
 4200 IF %ALT - 4C000.¤1,2,3
    1 D # ALT/10000.
      R3# -0.37728875E-02
      R2#  0.52352523E-02
      R1# -0.31047929E&00
      R0#  0.89444960E&01
      GO TO 50
    2 CONTINUE
    3 IF %ALT-80C00.¤4,5,6
    4 CONTINUE
    5 D # %ALT-40C00.¤/10000.
      R3# 0.23298604E-05
      R2# 0.21620268E-03
      R1#-0.47974207E&00
      R0# 0.75402419E&01
      GO TO 50
    6 IF %ALT - 160000.¤7,8,9
    7 D # %ALT-80C00.¤/10000.
      R3#  0.26359811E-04
      R2#  0.80943560E-02
      R1# -0.51509227E&00
      R0#  0.56272847E&01
      GO TO 50
    8 CONTINUE
    9 IF %ALT-175C00.¤10,11,12
   10 CONTINUE
   11 D #%ALT-160C00.¤/10000.
      R3#-0.57066660E-04
```

```
      R2# 0.30080000E-03
      R1#-0.36384173E&00
      R0# 0.20423758E&01
      GO TO 50
   12 IF %ALT-270000.¤13,14,15
   13 D # %ALT-175000.¤/10000.
      R3# -0.84014648E-03
      R2# -0.16797257E-02
      R1# -0.32931657E&00
      R0#  0.15021266E&01
      GO TO 50
   14 CONTINUE
   15 IF %ALT-290000.¤16,17,18
   16 CONTINUE
   17 D # %ALT-270000.¤/10000.
      R3# 0.
      R2# 0.36480009E-03
      R1#-0.61376240E&00
      R0#-0.25094864E&01
      GO TO 50
   18 IF %ALT-350000.¤19,20,21
   19 D # %ALT-290000.¤/10000.
      R3#  0.17070042E-02
      R2# -0.16579218E-02
      R1# -0.63898718E&00
      R0# -0.37292327E&01
      GO TO 50
   20 CONTINUE
   21 D # %ALT-350000.¤/10000.
      R3# -0.38550824E-02
      R2#  0.65901945E-01
      R1# -0.68705559E&00
      R0# -0.72589563E&01
   50 RO#%EXPF%%%R3*D&R2¤*D&R1¤*D&RO¤¤/100000.
      DEN #%RO*AK*RA**2¤/R**2
      ALT # ALT / 3.280833
 7980AX#2.*VY*U&U**2*X-%%AMU**2*X¤/RA**3¤-%%DEN*GRAV  *VX*VT¤/%2.*BALCO
     1¤¤
     0AY#U**2*Y-2.*VX*U-%%AMU**2*Y¤/RA**3¤-%%DEN*GRAV  *VY*VT¤/%2.*BALCO
     1¤¤
      AZ#%-1.¤*%%%AMU**2*Z¤/RA**3¤&%%DEN*GRAV  *VZ*VT¤/%2.*BALCO¤¤¤
      IF %CON8¤4000,699,1569
  699 CON8 # CON8 & 1.
      GO TO 601
 4201 DEN # 0.
      ALT # ALT / 3.280833
      GO TO 798
 1569 IF %ALT - 45720.096¤1434,1434,3104
 1434 IF %AACC¤4000,2460,2461
 2460 AACC # AACC & 1.
      GO TO 3104
 2461 DELT #DELT2
 3104 T # T & DELT
```

```
  422 THET1 # THETA
      BETA2 #BETA1
      BETA1 # BETA
      SIGMA1#SIGMA
      PHI1 # PHI
  704 PHI # ATANF%Z/%SQRTF%RA**2-Z**2¤¤¤
      THETA #ATANF%Y/X¤
      DELRA # %RA - RA1¤/DELT
      DEL # ATANF%%DELRA¤/%SQRTF%VT**2-DELRA**2¤¤¤
  421 DTHET#THETA -THET1
      GAMMA3# ATANF%%SQRTF%1.-%%SINF%PHI1¤*SINF%PHI¤¤&%COSF%PHI1¤*COSF%P
     1HI¤*COSF%DTHET¤¤¤**2¤¤/%SINF%PHI1¤*SINF%PHI¤&COSF%PHI1¤*COSF%PHI¤*
     2COSF%DTHET¤¤¤
      SIGMA # ATANF%%SINF%DTHET¤*COSF%PHI1¤¤/%SQRTF%%SINF%GAMMA3¤¤**2-%S
     1INF%DTHET¤*COSF%PHI1¤¤**2¤¤¤
      IF %1.5688 - %ABSF%SIGMA¤¤¤4099,4160,4150
 4099 IF %SIGMA1¤4102,4101,4102
 4101 DELSIG # .001
      GO TO 4120
 4102 DELSIG # SIGMA -SIGMA1
 4120 IF%BETA1-BETA2¤4128,4130,4129
 4128 BETA# BETA1-%ABSF%DELSIG¤¤
      GO TO 4300
 4130 BETA# BETA1&.001
      GO TO 4300
 4129 BETA# BETA1 &%ABSF%DELSIG¤¤
      GO TO 4300
 4150 IF %.001-%ABSF%SIGMA¤¤¤4160,4160,4161
 4161 IF %BETA - 1.¤4141,4165,4162
 4141 IF %SIGMA¤4166,4167,4167
 4162 IF %BETA1 - 5.¤4165,4165,4141
 4160 IF %SIGMA¤ 4163,4164,4164
 4163 IF %BETA1-4.7123895¤4165,4166,4166
 4165 BETA #3.14159265-SIGMA
      GO TO 4300
 4166 BETA #6.28318530 & SIGMA
      GO TO 4300
 4164 IF %BETA1 - 1.57079632675¤4167,4165,4165
 4167 BETA # SIGMA
 4300 GAMMA # ATANF%%SQRTF%1.-%%SINF%PHI0¤*SINF%PHI¤¤&%COSF%PHI0¤*COSF%P
     1HI¤*COSF%THETA-THET0¤¤¤**2¤¤/%SINF%PHI0¤*SINF%PHI¤&COSF%PHI0¤*COSF
     2%PHI¤*COSF%THETA-THET0¤¤¤
  870 RN #GAMMA * 3440.239
      VT1#VT
      RA1# RA
      ALT9 #ALT
  601 CONTR #CONTR & 1.
      IF %CONTR -1.¤4000,607,604
  604 IF %CONTR-9.¤602,602,606
  606 CONTR #0.
      IPAGE #IPAGE & 1
      GO TO 601
  607 PRINT 5017,IPAGE
```

```
 602 AA1 #DEL* 57.2958
     AA2 #BETA*57.2958
     AA3 #THETA*57.2958
     AA4 #PHI *57.2958
     PRINT 5005,T,X,Y,Z
     AA6 # SIGMA * 57.2958
     AA7 # GAMMA3 * 57.2958
     PRINT 5006,ALT,VX,VY,VZ
     PRINT 5007,VT,AX,AY,AZ
     PRINT 5008,AA2,RN,DEN,GRAV
     IF %SENSE LIGHT 1¤ 3000,3001
3000 PRINT 5028,AA4,AA3,AA1
     GO TO 609
3001 PRINT 5025,AA4,AA3,AA1,AT
 609 IF %ALT - 45720.096¤1940,1940,1941
1940 DELT #DELT2
1941 VX # VX & AX*DELT
     VY # VY & AY * DELT
     VZ # VZ & AZ * DELT
     X # X & VX * DELT
     Y # Y & VY * DELT
     Z # Z & VZ * DELT
     VT # SQRTF%VX**2 & VY**2 & VZ**2¤
     AT #%VT-VT1¤/DELT
     RA # SQRTF%X**2 & Y**2 & Z**2¤
     ALT #RA - R
     IF %ALT¤1202,1203,1203
1202 AABB # AABB & 1.
1203 IF %AABB-1.¤4000,2462,1204
1204 IF %AABB-2.¤2462,2463,8000
2463 DEN #.002376&%%ALT/%-5000.¤¤*%.0027448-.0023769¤¤
     GO TO 798
5028 FORMAT %1H ,2X,5HPHI   ,E15.8,2X,5HTHETA,E15.8,2X,5HDELTA,E15.8¤
 100 FORMAT %5E15.8¤
5010 FORMAT %1HK,25X,42HPHYSICAL CONSTANTS -SAME FOR ALL MISSILES-¤
5011 FORMAT %1H ,25X,62HGRAVITATIONAL ACCELERATION AT SEA LEVEL  9.8066
    15 METERS/SEC**2¤
5012 FORMAT %1H ,30X,44HEARTH ROTATION  2PI/24 X 3600 RADIANS/SECOND¤
5013 FORMAT %1H ,30X,33HRADIUS OF EARTH  6,371,230 METERS¤
5014 FORMAT %1HK,5X,12HOTHER INPUTS¤
5015 FORMAT      %1H ,5HDEL  ,E15.8,2X,5HBETA ,E15.8,2X,5HTHETA,E15.8,2X
    1,5HPHI  ,E15.8¤
5016 FORMAT      %1H ,5HALT  ,E15.8,2X,5HBALCO,E15.8,2X,5HRA   ,E15.8,2X
    1,5HVO   ,E15.8¤
5017 FORMAT %1H1,79X,5HPAGE ,I4¤
8000 PRINT 8001
8001 FORMAT %1H1,/////////20X,32H********END OF JOB********//1H1¤
4999 FORMAT %1H1,32X,31HBROWN ENGINEERING COMPANY, INC.,4X,5HPAGE ,I4¤
5000 FORMAT %1H ,30X,35HFREE FLIGHT AND RE-ENTRY TRAJECTORY¤
5001 FORMAT %1H ,35X,24HPROGRAMMED BY W.B.WARREN¤
5027 FORMAT %1H ,30X,35HTHEORETICAL DERIVATION - C.F.OSTNER¤
5002 FORMAT %1H ,38X,18H  RESEARCH STAFF  ¤
5003 FORMAT %1H ,39X,16H10 NOVEMBER 1962¤
```

```
5004 FORMAT %1HK,39X,31HPROGRAM NO. SP 9  METRIC UNITS.¤
50050FORMAT %1HK,2X,5HTIME ,E15.8,2X,5HX    ,E15.8,2X,5HY    ,E15.8,2X,
    15HZ    ,E15.8¤
5006 FORMAT %1H ,2X,5HALT  ,E15.8,2X,5HVX   ,E15.8,2X,5HVY   ,E15.8,2X,
    15HVZ   ,E15.8¤
5007 FORMAT %1H ,2X,5HVT   ,E15.8,2X,5HAX   ,E15.8,2X,5HAY   ,E15.8,2X,
    15HAZ   ,E15.8¤
5008 FORMAT %1H ,2X,5HBETA ,E15.8,2X,5HRANGE,E15.8,2X,5HDEN  ,E15.8,2X,
    15HGRAV ,E15.8¤
5025 FORMAT %1H ,2X,5HPHI  ,E15.8,2X,5HTHETA,E15.8,2X,5HDELTA,E15.8,2X,
    15HACCEL,E15.8¤
4000 STOP
     END
```

REFERENCES

1. Kooy, Uytenbogaart, Ballistics of the Future, N. V. Detechnische Uitgeverij H. Stam.

2. Pope, Bennie E., "Body Dynamics During Re-Entry", Brown Engineering Company, Inc. Technical Note R-5A, (Unclassified Version), August 28, 1962.

3. Minshew, H. M., "A FORTRAN Program to Calculate Atmospheric Properties", Brown Engineering Company, Inc. Technical Note R-27, October, 1962.