UNCLASSIFIED

AD 414370

DEFENSE DOCUMENTATION CENTER

FOR

SCIENTIFIC AND TECHNICAL INFORMATION

CAMERON STATION, ALEXANDRIA, VIRGINIA

UNCLASSIFIED

DISCLAIMER NOTICE

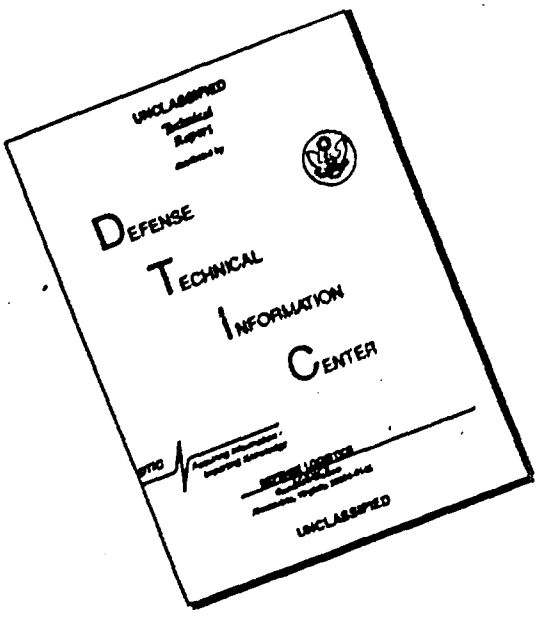

THIS DOCUMENT IS BEST QUALITY AVAILABLE. THE COPY FURNISHED TO DTIC CONTAINED A SIGNIFICANT NUMBER OF PAGES WHICH DO NOT REPRODUCE LEGIBLY.

NOTICE: When government or other drawings, specifications or other data are used for any purpose other than in connection with a definitely related government procurement operation, the U. S. Government thereby incurs no responsibility, nor any obligation whatsoever; and the fact that the Government may have formulated, furnished, or in any way supplied the said drawings, specifications, or other data is not to be regarded by implication or otherwise as in any manner licensing the holder or any other person or corporation, or conveying any rights or permission to manufacture, use or sell any patented invention that may in any way be related thereto.

414370

LOGED BY DDC
AD No. 414370

AFCRL-63-187

THIRTEENTH SCIENTIFIC REPORT

TECHNICAL REPORT 400-77

Reliability Improvement of Digital Communication Using Redundancy in Uncertainty Region Reception

Ludwik Kurz

June 1963

K UNIVERSITY

NEERING

eering

DDC
AUG 27 1963
SIA A

Department of Defense Agencies and their prime Contractors may obtain copies of this report from the Armed Services Technical Information Agency, Arlington Hall Station, Arlington 12, Virginia.

In addition to published papers, the College of Engineering reports the results of its research in the form of reports to sponsors of research projects, Technical Reports, and Technical Notes. The latter are normally limited to distribution within the College. Information regarding the availability of reprints of journal articles and Technical Reports may be obtained by writing to the Director of the Research Division, College of Engineering, New York University, New York, 53, N.Y.

AFCRL-63-187

TECHNICAL REPORT 400-77

RELIABILITY IMPROVEMENT OF DIGITAL COMMUNICATION USING REDUNDANCY IN UNCERTAINTY REGION RECEPTION

Ludwik Kurz
Assistant Professor

NEW YORK UNIVERSITY
COLLEGE OF ENGINEERING
DEPARTMENT OF ELECTRICAL ENGINEERING
Laboratory for Electroscience Research

University Heights
New York 53, New York

THIRTEENTH SCIENTIFIC REPORT

Contract AF19(604)-6168
Project P4610
Task T461003

June 1963

Approved by
Leonard S. Schwartz
Project Director

Prepared
for

AIR FORCE CAMBRIDGE RESEARCH LABORATORIES
OFFICE OF AEROSPACE RESEARCH
UNITED STATES AIR FORCE
BEDFORD, MASSACHUSETTS

NOTICE

Requests for additional copies by Agencies of the Department of Defense, their contractors, and other Government agencies should be directed to the:

DEFENSE DOCUMENTATION CENTER (DDC)
ARLINGTON HALL STATION
ARLINGTON 12, VIRGINIA

Department of Defense contractors must be established for ASTIA services or have their "need-to-know" certified by the cognizant military agency of their project or contract.

All other persons and organizations should apply to the:

U.S. DEPARTMENT OF COMMERCE
OFFICE OF TECHNICAL SERVICES
WASHINGTON 25, D.C.

ABSTRACT

This report considers an efficient method for utilizing the redundancy of the transmittible language to improve the reliability of a digital communication system disturbed by additive non-white gaussian noise. Namely, the reliability of digital systems using orthogonal and binary digit codes[1,2] is improved by introducing an uncertainty region at the receiver. This method is an extension and generalization of null-zone reception[3] previously applied to the improvement of binary transmission in the presence of white gaussian or peak-limited noise. It is shown that, by permitting a small percentage of nulls to be printed, considerable improvement in reliability is achieved. In addition, it is shown that communication links using orthogonal digit coding afford greater reliability than corresponding links using binary digit coding. Performance results are given for several different codes for the case in which the demodulated gaussian noise power density spectrum increases with increasing frequency. Such a noise power density spectrum acts as a weighting function which confines the generated signals to the available band of frequencies. A geometric interpretation of the results is given in terms of n-dimensional Euclidean space. Applications to feedback systems will be discussed in a future report.

GLOSSARY

A^2	signal-to-noise ratio parameter
A_{ij}	fixed u-dimensional vector
a_{ik}	coefficient of the kth orthogonal digit of the ith signal
B^2	bandwidth parameter
b^2	normalized bandwidth parameter
D_{ij}	"distance" between signals $s_i(t)$ and $s_j(t)$ [binary digit representations]
D_T	total distance for binary signalling alphabets
d_{ij}	distance from the origin to the hyperplane defined by $(A_{ij},Y) = k_1$
d_{ik}	k^{th} orthogonal digit of the ith signal
F_{ik}, f_{ik}	k^{th} coefficient in the general Fourier series expansion of $f_i(t)$
$\{f_i(t)\}$	signal set at the receiver used for correlation
$g_i(t)$	modified signals known at the receiver
$h_i(t)$	impulsive response of matched filters
k	uncertainty function for binary signalling
k_1	uncertainty parameter
k_c	critical setting of the uncertainty parameter
k_{cij}	critical setting of the uncertainty parameter in comparing signals $s_i(t)$ and $s_j(t)$
k^2_{ij}	uncertainty function

$n(t)$	gaussian noise interference in the interval $0 \leq t \leq T$
n_k	k^{th} coefficient of generalized Fourier series expansion of $n(t)$
n_{ik}	k^{th} sample of the ith noise waveform
P_e	system error probability
P_1	detection error if $s_i(t)$ and $s_j(t)$ differ in one digit position
P_s	detection error of the equal separation code
P_{ij}	binary detection error
$p(\quad)$	probability density function
$p[s_i(t)/y(t)]$ also $p(s_i/y)$	posterior probability that having received $y(t)$, $s_i(t)$ has been sent
$R(\tau)$	autocorrelation function of noise
R	covariance matrix of the gaussian noise
S^2	average signal power
S_i	detected levels at the receiver
$\{s_i(t)\}$	signalling alphabet
s_{ik}	k^{th} coefficient of the ith signal in the Fourier series expansion of $s_i(t)$
T	decision time
t_Δ	separation of samples
u	total number of digits in a word
u_o	system null probability
u_{ij}	binary null probability
$[u_{ij}]_{max}$	maximum value of u_{ij} for all i,j

v_{ij}	gaussian stochastic variable
$\bar{v}_{ij}$	average value of v_{ij}
$W_n(\omega)$	double sided noise power density spectrum
Y	variable u-dimensional vector
$y(t)$	signal and noise in the decision interval $0 \leq t \leq T$
y_k	k^{th} coefficient in the generalized Fourier series expansion of $y(t)$
y_{tk}	value of $y(t)$ at kt_Δ
α	normalized uncertainty parameter (null level) for binary transmission
α_1	normalized uncertainty parameter for the minimax code
α_d	normalized uncertainty parameter for the equi-distant code
α_s	normalized uncertainty parameter for the equal separation code
α_{ij}	normalized uncertainty parameter for comparing $s_i(t)$ with $s_j(t)$
γ_ω	number of code words of weight ω
δ_{ijk}	0 or 1 depending on the signs of the kth digit of signals $s_i(t)$ and $s_j(t)$
ϵ_{ik}	± 1
η	"width" of the uncertainty region
λ	number of opposite sign in comparing two signals
λ	inverse of the covariance matrix, R
$\lvert\lambda\rvert$	determinant of λ

λ_{mn}	typical term of λ
ξ^2	separation function for binary transmission
ξ_1^2	separation function if $\omega = 1$
ξ_d^2	separation function for the equidistant code
ξ_s^2	separation function for the equal separation code
ξ_{ij}^2	separation for any pair of signals $s_i(t)$, $s_j(t)$
τ_1	duration of a binary digit
σ^2	noise power per unit bandwidth for white gaussian noise interference
σ_k^2	variance of n_k
σ_v^2	variance of v_{ij}
$\{\varphi_k(t)\}$, $\{\psi_k(t)\}$	orthonormal sets

TABLE OF CONTENTS

		Page
I.	BACKGROUND	1
	Minimax Codes	9
	Equal Separation Codes	10
II.	UNCERTAINTY REGION RECEPTION	15
III.	BINARY SYSTEM	23
IV.	MULTISIGNAL SYSTEM	30
	A. General Relations	30
	B. Comparison of Performance	33
	1. Minimax Codes	34
	2. Equal Separation Codes	37
	3. Equidistant Codes	40
	4. Comparisons	43
V.	SYSTEM DESIGN	45
	A. Signal Design	45
	B. Implementation of the Uncertainty-Region-Reception Receiver	48
VI.	GEOMETRIC INTERPRETATION OF UNCERTAINTY REGION RECEPTION	51
APPENDIX A:	Background: Detection of Signals in Colored Noise	56
APPENDIX B:	Distances from the Origin of the u-dimensional Subspace to the Hyperplanes of the Uncertainty Region Polytope	74
REFERENCES		78
DISTRIBUTION LIST		79

I. BACKGROUND

The transmission of information through single link unidirectional communication systems requires both the selection of an appropriate set of signals, $\{s_i(t)\}$, $0 \leq t \leq T$, and the design of a suitable detection process at the receiver. When the channel interference is additive white gaussian noise the key results are:

1. The optimum receiver should use correlation techniques (or the equivalent) in which the received signal is multiplied with each of the possible signals that could have been sent. The product signals are then averaged over the signal duration. That averaging process yielding the greatest output at the end of the signal duration indicates which signal is most likely to have been the one sent.

2. The design of optimum signals of average power S^2 is based on the distance parameter

$$D_{ij} = \frac{1}{4TS^2} \int_0^T [s_i(t) - s_j(t)]^2 dt \qquad (1)$$

The distance parameter indicates the distinguishability between pairs of the signals as an equivalent amount of energy per message.

3. One optimum set of signals can be constructed as follows:

Under an average power constraint, S^2, when m bits of information are to be transmitted in the time T with the least error

probability, a basic waveform $\varphi_1(t)$ of duration $T/(2^m - 1)$ is chosen, subject only to the normalization that the r.m.s. value is unity. The transmitted signal consists of strings of $\pm S\varphi_1(t)$. If $[+S\varphi_1(t)]$ denotes a one and $[-S\varphi_1(t)]$ denotes a zero, the strings resemble in structure a Slepian $(2^m - 1, m)$ group code. At the receiver correlation detection of the entire string is used.

This signal structure is considered an equidistant code because the distance between all code words is the same. If the equidistant code is slightly modified by permitting small inequalities in the distances, while the total distance

$$D_T = \frac{1}{2} \sum_{i=1}^{2^m} \sum_{\substack{j=1 \\ i \neq j}}^{2^m} D_{ij} \quad , \tag{2}$$

remains at its maximum, then either the transmission rate can be increased or the bandwidth of the system can be reduced with only a small increase in the error probability.[1]

An alternate procedure is to select a set of orthonormal waveforms $\{\varphi_k(t)\}$ each of which is of duration T. The optimum signals are then of the form

$$s_i(t) = \sum_{k=1}^{2^m-1} \epsilon_{ik} S \varphi_k(t) \tag{3}$$

in which $\epsilon_{ik} = \pm 1$. Note that this is a parallel transmission of the basic waveforms rather than a sequential transmission. An optimum signal structure again resembles a Slepian $(2^m - 1, m)$ group code if the kth orthogonal waveform is identified with the kth digit and the corresponding two values of ϵ_{ik} are identified with the binary digits. The optimum distance parameter is

$$D_{ij} = \frac{2^{m-1}}{2^m - 1}, \quad i \neq j \tag{4}$$

when m bits are transmitted in the time T.

When the interference is additive gaussian, but not white (i.e., the noise power per unit bandwidth is not the same at all frequencies), correlation techniques are again found to be optimum, but the received signal is correlated not with the possible message signals, but with modified signals. These modified signals are obtained from the characteristics of the message signals and the noise power spectrum. The form of these modified signals is not obvious, although the results obtained for specific cases agree with intuitive notions. For those not familiar with this background material a brief discussion is presented in Appendix A. The key results are as follows:

1. The optimum receiver should use correlation techniques (or the equivalent) in which the received signal, $y(t)$ is correlated with each signal of the set $\{f_i(t)\}$. The members of the set have a one to one correspondence with the set of transmitted signals, $\{s_i(t)\}$ based on the relation

$$s_i(t) = \int_0^T R(t-\tau) f_i(\tau) d\tau \tag{5}$$

in which $R(\tau)$ is the autocorrelation function of the noise. Two forms of the optimum receiver are shown in Figure 1.

2. If the set of signals, $\{s_i(t)\}$, satisfies the homogeneous integral equation

$$\sigma_i^2 s_i(t) = \int_0^T R(t-\tau) s_i(\tau) d\tau \tag{6}$$

$f_i(t) = s_i(t)$ for each i, as in the case in which the interference is additive white noise. This set of signals, which is basic to the system, will be designated by $\{\varphi_k(t)\}$.

This signal set has two important properties. First, the set is complete and orthonormal so that any reasonable (finite mean square value, finite number of discontinuities) set of signals $\{s_i(t)\}$ can be expressed as linear combinations of the orthonormal set $\{\varphi_k(t)\}$ - i.e.,

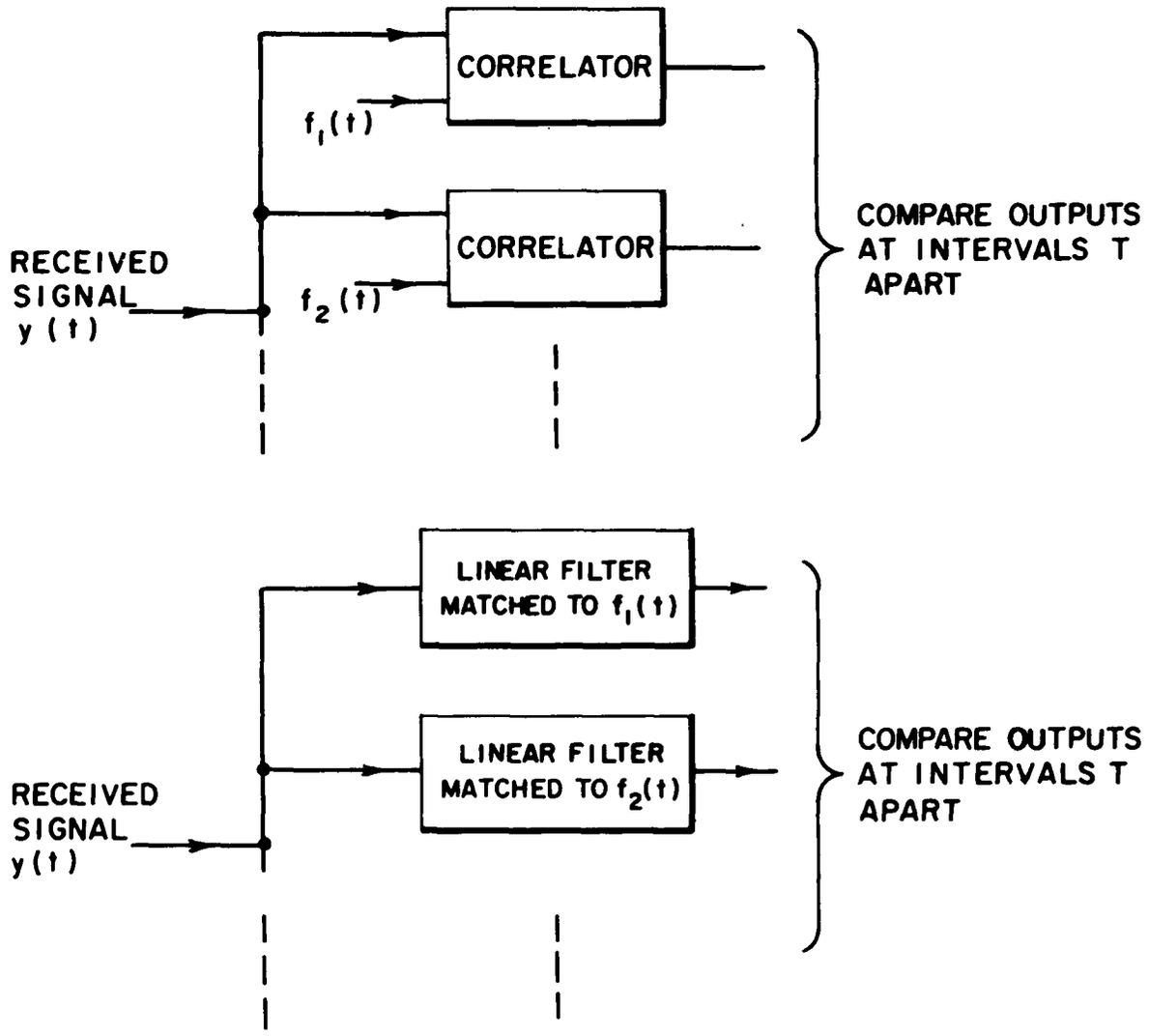

FIG. 1

TWO FORMS OF AN OPTIMUM RECEIVER FOR THE DETECTION OF KNOWN SIGNALS WHEN THE INTERFERENCE IS ADDITIVE (WHITE OR COLORED) GAUSSIAN NOISE.

$$s_i(t) = \sum_{k=1}^{\infty} a_{ik}\varphi_k(t) \tag{7}$$

in which

$$a_{ik} = \int_0^T s_i(t)\varphi_k(t)dt \quad . \tag{8}$$

Second, for any set of signals $\{s_i(t)\}$, if the received signal $y(t)$,

$$y(t) = s_i(t) + n(t) \tag{9}$$

is correlated with a member of the orthogonal set $\varphi_k(t)$, the mean output is a_{ik}, while the output noise is additive gaussian of variance σ_k^2 (σ_k^2 being eigenvalue corresponding to the kth eigenfunction of the homogeneous equation (6)).

Any signal $s_i(t)$ may thus be considered as consisting of a sum of orthogonal signals each of which is independently affected by the additive non-white system noise. Each such signal or digit may be represented by

$$d_{ik} = a_{ik}\varphi_k(t) \tag{10}$$

The magnitudes of the weighting constants a_{ik} are determined from the following considerations:

1. To minimize interaction between the signals and the additive gaussian noise interference, the basic waveforms are the

ordered eigenfunctions $\{\varphi_k(t)\}$ selected to correspond to increasing eigenvalues, $\{\sigma_k^2\}$, starting from the lowest, until as many as necessary have been selected. This is because the lower ordered eigenfunctions correspond to more distinguishable waveforms (see Appendix A).

2. A detection scheme is desirable which does not require estimation of the signal or noise levels at the receiver. To achieve this all $k^{\underline{th}}$ digits, a_{ik} for all i, will have the same magnitude and the sign of the magnitude will indicate the digit.

3. For the signal structure to be completely symmetrical - i.e., each signal to have the same noise immunity as any other - each signal of the set $\{s_i(t)\}$ will be chosen to have the same number, u, of orthogonal digits and the power will be apportioned among the digits in proportion to the noises $\{\sigma_k^2\}$. Thus,

$$a_{ik} = \pm S\sqrt{T}\,\frac{\sigma_k}{\sqrt{\sum_{k=1}^{u}\sigma_k^2}}\ ;\ k = 1, 2, 3, \ldots, u \qquad (11)$$

The signs of the digits are found from a suitable binary group alphabet.[1,4]

For such an orthogonal digit coding scheme the probability that $s_i(t)$ will be received as $s_j(t)$ excluding all the other signals is given by

$$P_{ij} = \frac{1}{2}\left[1 - \Phi\left(\frac{\xi_{ij}}{\sqrt{2}}\right)\right] , \tag{12}$$

in which

$$\Phi(x) = \frac{2}{\sqrt{\pi}} \int_0^x e^{-z^2}\, dz \tag{13}$$

is the tabulated error integral and

$$\xi_{ij}^2 = \sum_{k=1}^{u} \frac{\delta_{ijk}\, a_{ik}^2}{\sigma_k^2} \tag{14}$$

The value of δ_{ijk} is zero if the signs of the orthogonal digits d_{ik}, d_{jk} are the same and unity if the signs are different.

As can be seen the larger ξ_{ij}^2 the smaller the detection error, P_{ij}. For this reason ξ_{ij}^2 will be called the separation function.

Several types of signal structures will be considered in this report. These structures will be limited to those having the properties described in paragraphs 1, 2, and 3 above. The analogy between these types of signal structures and coding is quite apparent. The number of orthogonal waveforms $\{\varphi_i(t)\}$ selected corresponds to the selection of the number of digits in each code word. The selection of the signs of the orthogonal digits corresponds to the selection of the binary digits of a

conventional code. For convenience any signal structure having these properties will be called an efficient code. The efficient codes considered in this report are

1. Minimax codes
2. Equal separation codes.

Minimax Codes

The minimax code is an efficient code the signal structure of which resembles uncoded PCM. A minimum number of orthogonal waveforms is used, just as PCM employs a minimum number of digits per code word. The signal power is apportioned among the orthogonal digits so as to minimize the maximum probability that any transmitted code word will be received as another. If m bits of information are to be transmitted, the minimum number of orthogonal digits in each signal is m. The maximum detection error occurs for any two signals $s_i(t)$ and $s_j(t)$ when they differ by one orthogonal digit. Since this error is to be minimized subject to average power limitation of the signal, it means that every digit of any signal $s_i(t)$ must be affected by the noise in the same manner, or for any $s_i(t)$ of the signal set $\{s_i(t)\}$, $i = 1, 2, \ldots, 2^m$ the following condition must be satisfied.

$$\frac{a_{i1}}{\sigma_1} = \frac{a_{i2}}{\sigma_2} = \cdots = \frac{a_{i\mu}}{\sigma_\mu} = \cdots = \frac{a_{im}}{\sigma_m} \tag{15}$$

This is, of course, one of the properties the code must have to be an efficient code.

The error probability of the minimax code is given by

$$P_e = 1 - (1-P_1)^m \tag{16}$$

in which

$$P_1 = \frac{1}{2}\left[1 - \Phi\left(\frac{\xi_1}{\sqrt{2}}\right)\right] \tag{17}$$

and ξ_1^2 is the separation function between two code words that differ by one digit - i.e.,

$$\xi_1^2 = \frac{S^2{}_T}{\sum_{k=1}^{m} \sigma_k{}^2} \tag{18}$$

<u>Equal Separation Codes</u>

The equal separation codes are those for which all the separation functions ξ_{ij}^2 are equal and the total separation

$$A_T = \frac{1}{2} \sum_{i=1}^{2^m} \sum_{\substack{j=1 \\ i \neq j}}^{2^m} \xi_{ij}^2 \tag{19}$$

is at its maximum. A code defined in this manner determines a

stationary point for the error probability and is thus an optimum code.

It can be shown that the signal structure resembles a Slepian $(2^m - 1, m)$ group code. The words of this type of code are equidistant from each other.

The separation function is

$$\xi_{ij}^2 = \xi_s^2 = \frac{2^{m-1} S^2_T}{\sum_{k=1}^{2^m-1} \sigma_k^2} \tag{20}$$

The corresponding expression for the error probability, P_e, is

$$P_e \leq 1 - (1 - P_s)^{2^m-1} , \tag{21}$$

in which

$$P_s = \frac{1}{2}\left[1 - \Phi\left(\frac{\xi_s}{\sqrt{2}}\right)\right] .$$

If the error probability is small, an approximate expression is

$$P_e \doteq (2^m-1)P_s \tag{22}$$

in which

$$P_s = \frac{1}{\sqrt{2\pi}} \; \frac{\exp\left[-\frac{\xi_s^2}{2}\right]}{\xi_s} .$$

For purposes of illustration the specific case considered in this report is that in which the interference is non-white gaussian noise, the spectral density of which is

$$W_n(\omega) = A^2 + B^2\omega^2 \text{ (double-sided spectrum)} \tag{23}$$

This can be considered either the noise at baseband corresponding to the synchronous detection of an r-f signal, or as a "weighting function" which results in the design of signals such that these signals are confined to an available frequency band. In this latter interpretation the signal set $\{s_i(t)\}$ is designed to minimize interchannel interference. The autocorrelation function corresponding to the power density spectrum of the noise is given by

$$R(\tau) = \frac{1}{2\pi} \int_{-\infty}^{+\infty} [A^2 + B^2\omega^2]\, e^{j\omega\tau}\, d\omega \tag{24}$$

$$= A^2\delta(\tau) - B^2\delta''(\tau)$$

in which

$\delta(\tau)$ = Dirac delta function

$\delta''(\tau)$ = Second derivative of the Dirac delta function.

The basic orthonormal functions $\varphi_k(t)$ are solutions of

$$\sigma_k^2\varphi_k(t) = \int_0^T \varphi_k(\tau)R(t-\tau)d\tau \tag{25}$$

By substitution it is found that the functions $\varphi_k(t)$ are therefore solutions of the differential equation

$$B^2\varphi_k''(t) + (\sigma_k^2 - A^2)\varphi_k(t) = 0 \tag{26}$$

To avoid discontinuities in sequences of transmitted signals the additional constraint

$$\varphi_k(0) = \varphi_k(T) = 0 \tag{27}$$

will be imposed. The corresponding orthonormal set is then

$$\varphi_k(t) = \sqrt{\frac{2}{T}} \sin \frac{k\pi t}{T} \tag{28}$$

in which $k = 1, 2, 3, \ldots$. Since

$$\sqrt{\frac{\sigma_k^2 - A^2}{B^2}} = \frac{k\pi}{T} \tag{29}$$

the corresponding eigenvalues are

$$\sigma_k^2 = \frac{k^2B^2\pi^2}{T^2} + A^2 \tag{30}$$

The orthogonal components of the signals are the Fourier Series components. Note, however, that the associated variances $\{\sigma_k^2\}$ increase with increasing k. This is reflected in the fact that higher order components are more heavily weighted before being summed to form the signals. See reference 2 for specific signal waveforms.

II. UNCERTAINTY REGION RECEPTION

In many practical situations, the transmitted language possesses redundancy and thus can tolerate the printing out of some "nulls" - a null corresponding to none of the possible transmitted signals being selected as the most probable signal sent. This selection may be desirable if the noise conditions in the channel are such that the two greatest $p[s_i(t)/y(t)]$ are close to each other. In these cases, the amount of information destroyed by withholding the decision - i.e., selecting the null - may be less than that destroyed by selecting the most likely signal as the signal sent. If the language does not permit the presence of nulls in the final message, these may be filled in by means of feedback systems discussed elsewhere.[5,6,7,8] Indeed the use of nulls itself is a useful means of obtaining the advantages of feedback, particularly the fail-safe operation.[9,10]

Thus, the reliability of the transmission can be improved if instead of accepting the signal corresponding to the largest posterior probability $p[s_i(t)/y(t)]$, the decision is withheld for any two signals $s_i(t)$, $s_j(t)$ of the transmittible set, $\{s_i(t)\}$, if

$$\frac{1}{\eta} \leq \frac{p[s_i(t)/y(t)]}{p[s_j(t)/y(t)]} \leq \eta \tag{31}$$

in which η determines the "width" of the uncertainty region. The value of η controls the percentage of nulls present in the accepted message.

One can vary the width of the uncertainty region, η, to match the noise conditions in the channel. However, when the interference is additive Gaussian with Rayleigh fading, the receiver becomes complicated with only a small increase in reliability. Thus, in practical situations the use of a variable width is not usually justified. However, if the interference is a linear combination of Gaussian and other forms of noise, the use of a variable width together with a nonlinear detection scheme may yield considerable improvement in comparison with fixed width systems. This will be discussed in a forthcoming report.

The performance of the uncertainty region reception system may be characterized by two error probabilities and two null probabilities. These are:

1. Binary Detection Error
2. Binary Null Probability
3. System Error Probability
4. System Null Probability

The binary detection error and the binary null probability are evaluated by considering only pairs of signals - the true one and one other - and ignoring all others. The binary detection error is then

the probability that the true signal will have a smaller a posteriori probability than the other signal, while the binary null probability is the probability that the a posteriori probabilities will be too close for a good decision. Note that if there are n signals, there are $\frac{n(n-1)}{2}$ possible different binary detection errors and binary null probabilities. The system error probability and the system null probability are the usual overall system parameters.

To evaluate the bounds of the uncertainty region and the above parameters, consider that the received signal y(t) is properly correlated with each member of the signal set $\{f_i(t)\}$ to yield the set of stochastic variables upon which the decisions are based. If the received signal is expanded in the form

$$y(t) = \sum_{k=1}^{u} y_k \, \varphi_k(t) \tag{32}$$

in which

$$y_k = \int_0^T y(t) \, \varphi_k(t) \, dt \quad , \tag{33}$$

the set of stochastic variables is given by

$$\left\{ \sum_{k=1}^{u} \frac{y_k \, a_{ik}}{\sigma_k^2} \right\} \quad i = 1,2, \ldots \quad . \tag{34}$$

The more likely signals correspond to larger values of the stochastic variables. Moreover, the a posteriori probabilities are exponentially related to the variables so that the bounds of the uncertainty region are given by

$$-k_1 < \sum_{k=1}^{u} \frac{y_k(a_{ik} - a_{jk})}{\sigma_k^2} < k_1 \tag{35}$$

for all i,j, in which $k_1 = \ln \eta$. This is a generalization of previous work[3] based on the interference being white noise to the case in which the noise is non-white and orthogonal digit coding is used.

To evaluate the binary detection error probability P_{ij} the a posteriori probability of the true signal $s_i(t)$ is compared with that of the signal $s_j(t)$. To do this consider the stochastic variable

$$v_{ij} = \sum_{k=1}^{u} \frac{y_k(a_{ik} - a_{jk})}{\sigma_k^2} \tag{36}$$

Since all y_k have a Gaussian distribution and a_{ik}, a_{jk}, and σ_k^2 are fixed numbers, each term of the sum is Gaussian and thus the stochastic variable v_{ij} has a Gaussian distribution. To specify the probability density distribution, $P(v_{ij})$, it is therefore sufficient to specify the mean value, $\bar{v}_{ij}$, and the variance, σ_{ij}^2.

As shown in Appendix A, the use of the orthonormal expansion results in each term of this sum being a variate which is independent of the other terms. Thus, the mean value is the sum of the mean values of each term, while the variance is the sum of the variances.

Since $s_i(t)$ is the signal sent, the mean value is

$$\bar{v}_{ij} = \sum_{k=1}^{u} \frac{a_{ik}(a_{ik} - a_{jk})}{\sigma_k^2} \tag{37}$$

The variance is

$$\sigma_v^2 = \sum_{k=1}^{u} \frac{(a_{ik} - a_{jk})^2}{\sigma_k^2} \tag{38}$$

The binary detection error is then given by

$$P_{ij} = \frac{1}{2}\left[1 - \operatorname{erf}\left(\frac{\xi_{ij} + k_{ij}}{\sqrt{2}} \right) \right] \tag{39}$$

in which

$$\xi_{ij} = \frac{\bar{v}_{ij}}{\sigma_v}$$

and

$$k_{ij} = \frac{k_i}{\sigma_v} \tag{40}$$

The function k^2_{ij}, which defines the uncertainty region in the orthogonal signal coordinates, will be called the uncertainty function.

When efficient coding is used,

$$\bar{v}_{ij} = 2 \sum_{k=1}^{u} \frac{\delta_{ijk}\, a^2_{ik}}{\sigma^2_k} \tag{41}$$

and

$$\sigma^2_v = 4 \sum_{k=1}^{u} \frac{\delta_{ijk}\, a^2_{ik}}{\sigma^2_k} \tag{42}$$

in which δ_{ijk} is zero if the signs of the orthogonal digits a_{ik}, a_{jk} are the same and unity if the signs differ. The corresponding expression for the separation and uncertainty functions are

$$\xi^2_{ij} = \frac{\lambda s^2 T}{\sum_{k=1}^{u} \delta_{ijk}\, \sigma^2_k} \tag{43}$$

and

$$k^2_{ij} = \frac{k^2_i}{4\xi^2_{ij}} \tag{44}$$

in which

$$\lambda = \sum_{k=1}^{u} \delta_{ijk} \tag{45}$$

The binary null probability, u_{ij}, is the probability that having sent signal $s_i(t)$, the received signal will be in the null region so far as $s_i(t)$ and $s_j(t)$ are concerned.

$$u_{ij} = \frac{1}{2}\left[\Phi\left(\frac{\xi_{ij} + k_{ij}}{\sqrt{2}} \right) - \Phi\left(\frac{\xi_{ij} - k_{ij}}{\sqrt{2}} \right) \right] \qquad (46)$$

It is clear from this equation why k_{ij}^2 is called the uncertainty function; large values of k_{ij}^2 imply large values of u_{ij}.

An exact expression for the error probability of the system depends on the exact signal structure used since the values of P_{ij} are not independent. However, using the same procedure as in [1], a pessimistic expression for the error probability is obtained.

$$P_e \leq 1 - 2^{-m} \sum_{i=1}^{2^m} \prod_{j=1}^{2^m} (1 - P_{ij}) \qquad (47)$$

$$i \neq j$$

The corresponding system null probability, u_o, that the decision will be withheld after all comparisons have been made similarly depends on the exact signal structure. As an approximation,

$$u_o \leq [u_{ij}]_{max} \qquad (48)$$

in which $[u_{ij}]_{max}$ is the maximum value of u_{ij} for all i,j.

In addition to the above efficient codes, conventional binary digit codes will also be considered. In these codes, the signals consist of strings of plus or minus the basic waveform $\varphi_1(t)$ - i.e., the first eigenfunction of the homogeneous integral equation based on the signal duration τ_1. For a total signal duration T and u binary digits per code word,

$$\tau_1 = \frac{T}{u} \tag{49}$$

The corresponding separation function for these codes is

$$\xi^2_{ij} = \frac{\lambda S^2 T}{u\tau_1^2} \tag{50}$$

In terms of this separation function, the above relations for the error probabilities and null probabilities remain unchanged if the noise in each digit duration is assumed uncorrelated with the noise in other digit durations.

III. BINARY SYSTEM

Consider the simplest, but very important case, of binary communication in which there are only two possible transmittible signals ($m = 1$). In this case, the choice of signals is $s_1(t) = -s_2(t) = S\sqrt{T}\,\varphi_1(t)$, in which $\varphi_1(t)$ is the normalized first eigenfunction of the homogeneous integral equation. The system error probability is

$$P_e = P_{12} = P_{21} = \frac{1}{2}\left[1 - \operatorname{erf}\left(\frac{\xi + k}{\sqrt{2}}\right)\right] \tag{51}$$

in which

$$\xi^2 = \frac{S^2 T}{\sigma_1^2} \tag{52}$$

and

$$k^2 = \frac{k_1^2}{4\xi^2} \tag{53}$$

The expression for the null probability reduces to

$$u_0 = \frac{1}{2}\left[\operatorname{erf}\left(\frac{\xi + k}{\sqrt{2}}\right) - \operatorname{erf}\left(\frac{\xi - k}{\sqrt{2}}\right)\right] \tag{52}$$

When the bounds on the uncertainty region are set in accordance with a fixed a posteriori probability - i.e., fixed k_1 - the error probability attains a maximum when

$$\left[\xi + \frac{k_1}{2\xi} \right] \tag{54}$$

is a minimum. This critical setting of the uncertainty parameter, k_c, is given by

$$k_c = 2\xi^2 \tag{55}$$

For proper operation of the system (high reliability and low percentage of nulls) the uncertainty parameter should be in the range

$$0 < k_1 < k_c \tag{56}$$

For convenience let us define a normalized uncertainty parameter

$$\alpha = \frac{k_1}{k_c} \tag{57}$$

Then

$$P_e = \frac{1}{2} \left\{ 1 - \operatorname{erf} \left[\frac{\xi}{\sqrt{2}} (1 + \alpha) \right] \right\} \tag{58}$$

and

$$u_o = \frac{1}{2} \left\{ \operatorname{erf} \left[\frac{\xi}{\sqrt{2}} (1 + \alpha) \right] - \operatorname{erf} \left[\frac{\xi}{\sqrt{2}} (1 - \alpha) \right] \right\} \tag{59}$$

in which the proper range of operation is

$$0 < \alpha < 1 \tag{60}$$

Figure 2 shows the behavior of the system error probability and

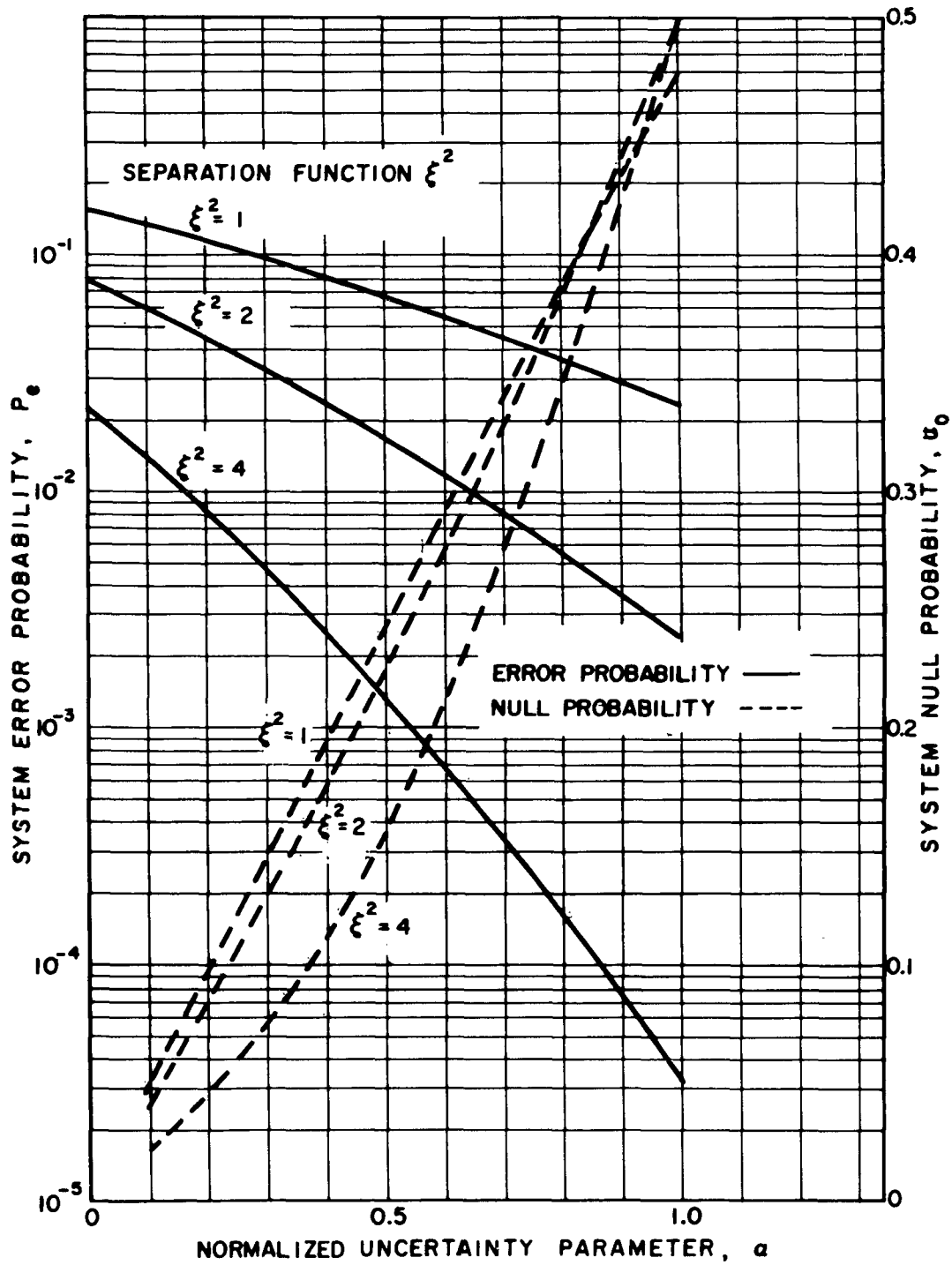

FIG. 2

BINARY SYSTEM ERROR PROBABILITY AND NULL PROBABILITY AS A FUNCTION OF THE UNCERTAINTY LEVEL, a

the null probability u_o as a function of the normalized uncertainty parameter, α, for fixed values of the separation function, ξ^2. One can conclude from the figure that for large values of the separation function the system error probability, P_e, decreases almost exponentially with an increasing null threshold, α, while the system null probability, u_o, increases only linearly. For reasonable large values of the separation function, ξ^2, and for operation near the minimum error probability, $\alpha \approx 1$, suitable approximations are

$$P_e = \frac{1}{\sqrt{2\pi}} \frac{\exp - \left[\xi^2 \cdot \frac{(1+\alpha)^2}{2} \right]}{\xi(1+\alpha)} \tag{61}$$

and

$$u_o \doteq \frac{1}{2} \left\{ 1 - \sqrt{\frac{2}{\pi}}\, \xi(1 - \alpha) \right\} \tag{62}$$

These equations indicate that for values of the normalized uncertainty parameter close to unity and for large values of the separation function, small changes in ξ^2 result in a considerable improvement in the reliability of the communication system while the increase in the percentage of nulls is negligible.

To relate these results to the noise in the system consider the case in which the demodulated noise power spectrum is such that the noise density increases with increasing frequency.

The importance of this case is discussed in Section I. Figures 3 and 4 show the behavior of the system for noise power density spectra

$$(1 + 0.1\,\omega^2) \quad \text{and} \quad (1 + 0.01\,\omega^2)$$

respectively, and for a fixed null level $\alpha = 0.5$. For both cases best operation occurs when the separation is large (large average power, S^2, long signal duration, T) since a great decrease in error probability is then obtained at the cost of only a modest percentage of nulls. However, note that the more non-white the noise, the more effective is an increase in signal duration over a corresponding increase in signal power. This is in contrast to the situation in which the interference is white, since then doubling the duration is just as effective as doubling the power.

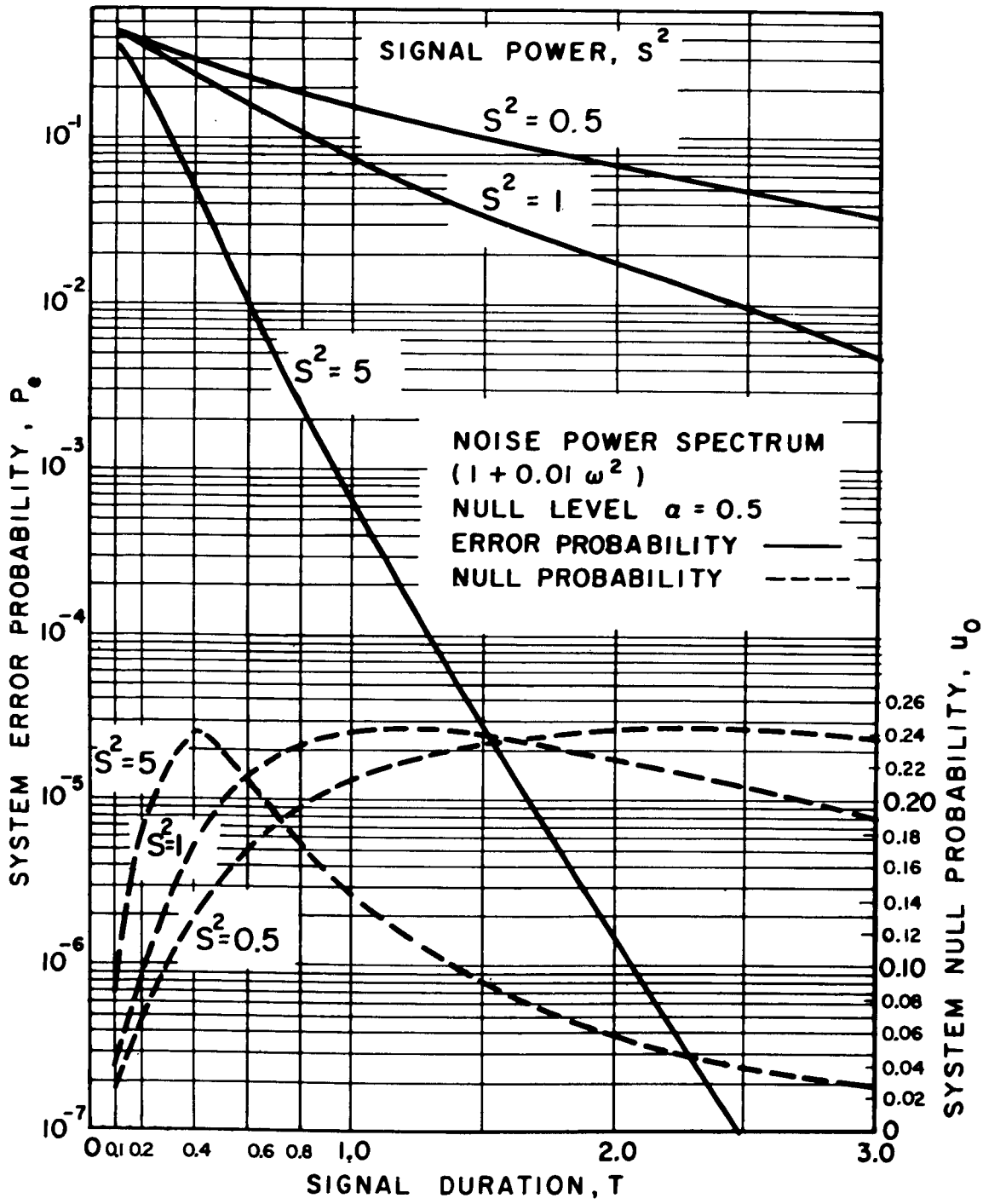

FIG. 3

BINARY SYSTEM ERROR PROBABILITY AND NULL PROBABILITY AS A FUNCTION OF DECISION TIME

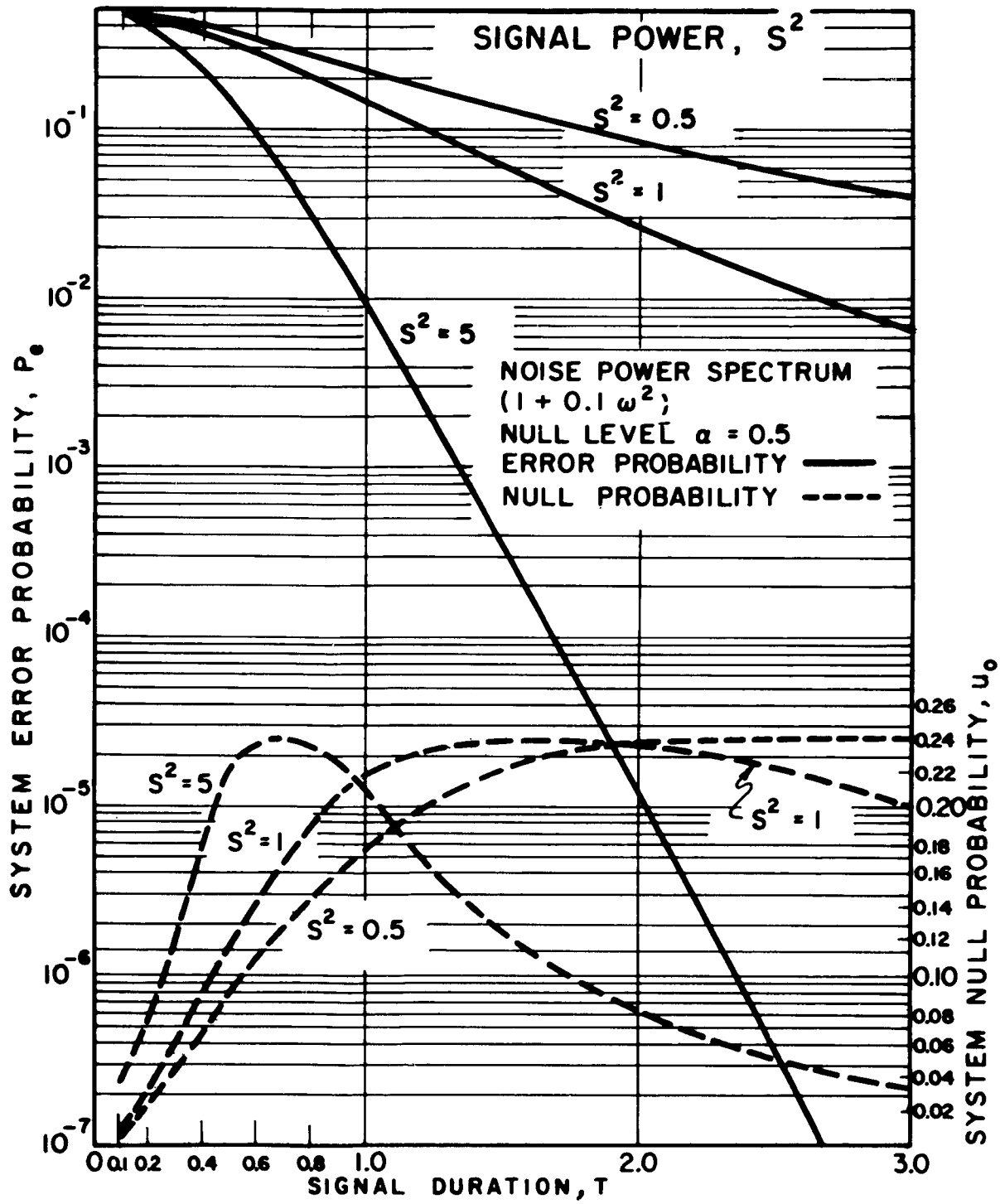

FIG. 4

BINARY SYSTEM ERROR PROBABILITY AND NULL PROBABILITY AS A FUNCTION OF DECISION TIME

IV. MULTISIGNAL SYSTEM

It has previously been shown[1] that transmission of a message of m bits can be near optimally achieved by coding it as one signal of a properly generated time-limited signal set, $\{s_i(t)\}$, $i = 1,2,3, \ldots, 2^m$, using orthogonal or binary digit representations corresponding to orthogonal or binary digit codes. A brief summary of previous results is given in Section I. As has been demonstrated, the key parameters for these types of codes are the separation functions given in Equations (43) and (50). When uncertainty region reception is introduced at the receiver, the uncertainty function becomes another key parameter. Relation (44) defines the uncertainty function in orthogonal signal coordinates. The purpose of this section of the report is to obtain general expressions for the performances of the multisignal systems in terms of these parameters, and the evaluate specific cases which permit an engineering comparison of the relative merits.

A. General Relations

One can introduce the concept of a critical value of the uncertainty parameter for these codes in a manner similar to that for binary case - namely, it will be defined as that value of the uncertainty parameter corresponding to the maximum detection error. Using standard methods, this critical value is found to be

$$k_{cij} = 2\xi_{ij}^2 \tag{63}$$

Normalizing with respect to this critical value

$$\alpha_{ij} = \frac{k_1}{k_{cij}} \tag{64}$$

the expression for the binary detection error probability becomes

$$P_{ij} = \frac{1}{2}\left\{ 1 - \Phi\left[\frac{\xi_{ij}(1 + \alpha_{ij})}{\sqrt{2}} \right]\right\} \tag{65}$$

The corresponding expression for the binary null probability is

$$u_{ij} = \frac{1}{2}\left\{ \Phi\left[\frac{\xi_{ij}(1 + \alpha_{ij})}{\sqrt{2}} \right] - \Phi\left[\frac{\xi_{ij}(1 - \alpha_{ij})}{\sqrt{2}} \right]\right\} \tag{66}$$

Note that ξ_{ij} and α_{ij} depend on the separation between the two signals being considered. For two particular signals, if the null level, k_1, is fixed then $\{\alpha_{ij}\}$ are fixed. Systems using variable k_1 will be discussed in connection with receiver implementation problems. The proper range of operation is, of course,

$$0 < \alpha_{ij} < 1$$

As might be expected from an examination of the non-uncertainty region systems, an exact expression for the system error probability is difficult to obtain because the values of

P_{ij} are not independent. Using the procedure of [1] a pessimistic expression can be obtained for the cases in which orthogonal digit coding is used. Let γ_ω be the number of code words of weight ω. Defining

$$\xi_\omega^2 = \frac{\omega \mathcal{E}^2 T}{\sum_{k=1}^{u} \sigma_k^2} \tag{67}$$

and

$$P_\omega = \frac{1}{2}\left[1 - \Phi\left(\frac{\xi_\omega}{\sqrt{2}} \right) \right] \tag{68}$$

then

$$P_e \leq 1 - \prod_{\omega=0}^{u} (1 - P_\omega)^{\gamma_\omega} \tag{69}$$

A corresponding pessimistic expression for the system null probability is

$$u_o \leq [u_{ij}]_{max} \tag{70}$$

$$\leq \frac{1}{2}\left\{ \Phi\left[\frac{\xi_{max}}{\sqrt{2}} (1 + \alpha_{max}) \right] - \Phi\left[\frac{\xi_{min}}{\sqrt{2}} (1 - \alpha_{max}) \right] \right\} \tag{71}$$

in which

$$\begin{aligned} \xi_{max} &= \xi_\omega \Big|_{max} \\ \xi_{min} &= \xi_\omega \Big|_{min} \quad , \quad \omega \neq 0 \end{aligned} \tag{72}$$

and

$$\alpha_{max} = \alpha_{ij}\Big|_{max} \quad , \quad \text{all } i,j \quad i \neq j$$

B. Comparison of Performance

The performances of systems using the minimax, equal separation, and equidistant codes will be evaluated under the assumption that the additive colored noise in the system has a demodulated power density spectrum which is an increasing function of frequency. As previously shown,[1] with the detector selecting the signal corresponding to the largest posterior probability $p(s_i/y)$, the orthogonal digit codes yield lower probabilities of error than binary codes, all other conditions remaining the same.

With a noise power density spectrum as given by relation (23), adjustment of the ratio B/A corresponds to adjusting the effective bandwidth of the signals. When B/A is small, the noise is closer to being white noise and the signals designed will have a greater bandwidth. When B/A is large, the noise is heavily colored and the designed signals will have a narrow bandwidth. If the bandwidth of the system is large, it is better to use more complicated signal forms (i.e., the equal separation code). On the other hand, if the bandwidth of the system is small, the use of the minimax code is indicated. The reason for this is that the higher ordered eigenfunctions from which the higher

ordered digits are generated have greater noise associated with them. The specific variances are given by relation (30). When the noise is highly colored, the noise increases almost with the square of the order of the digit, so that it is better to use fewer digits - i.e., the minimax code. On the other hand, when more digits can be used, the equal separation code is better.

To evaluate the performace of uncertainty region reception systems using the minimax, equal separation, and equidistant codes described above, specific relations for error probability and null probability will now be derived.

1. Minimax Codes

The minimax code is the orthogonal digit analog of uncoded binary PCM. The structure of the code is such that the maximum detection error is minimized. The separation functions for this code are not all the same, but instead resemble the distances between uncoded binary words. Corresponding to the error probability of the m bit code, given by (16), (17), and (18) for normal reception, the error probability for uncertainty region reception is given by

$$P_e = 1 - (1 - P_1)^m \tag{73}$$

in which

$$P_1 = \frac{1}{2}\left\{ 1 - \Phi\left[\frac{\xi_1}{\sqrt{2}} (1 + \alpha_1) \right]\right\} \tag{74}$$

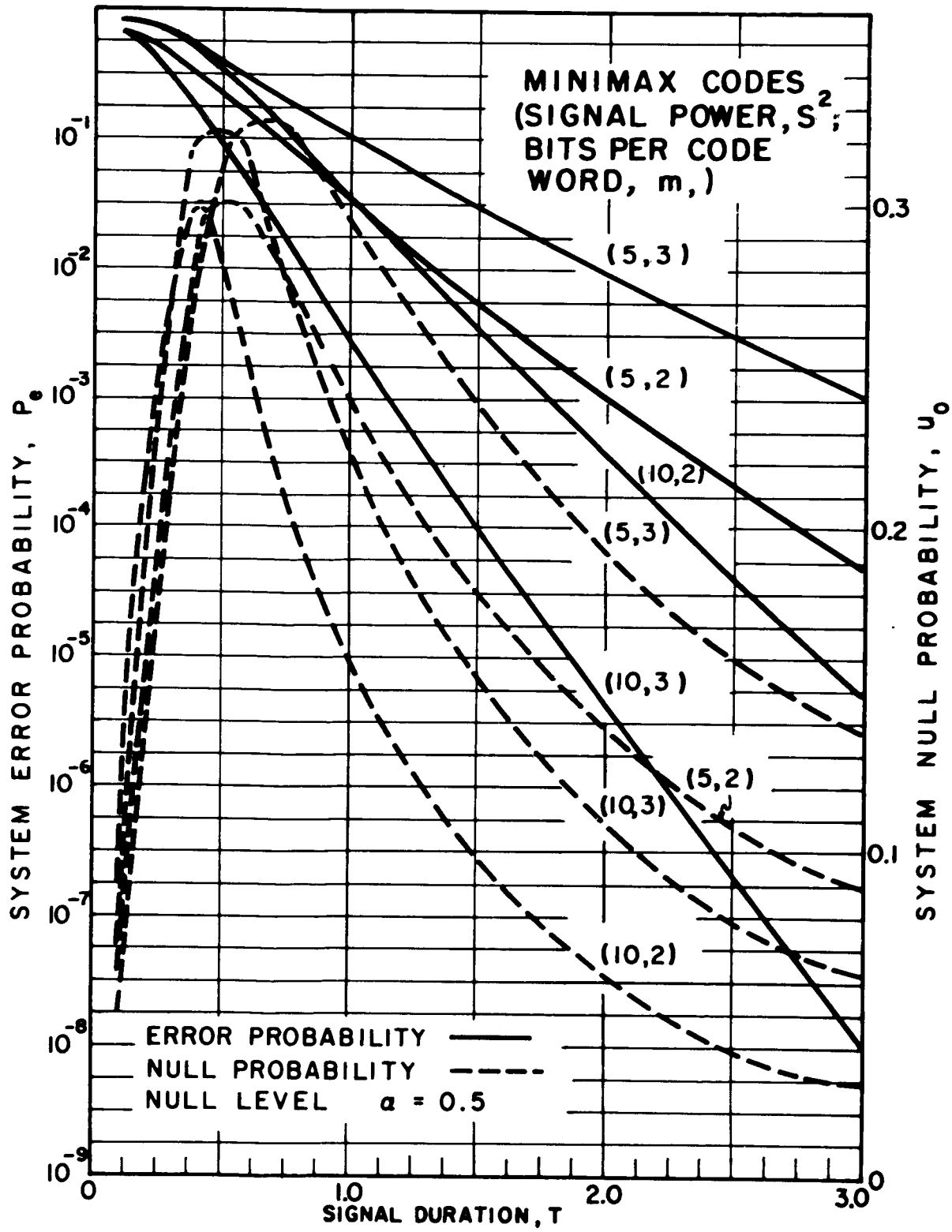

FIG. 5

PERFORMANCE OF THE MINIMAX CODES, WHEN THE NOISE POWER DENSITY SPECTRUM IS $(1+0.01\,\omega^2)$.

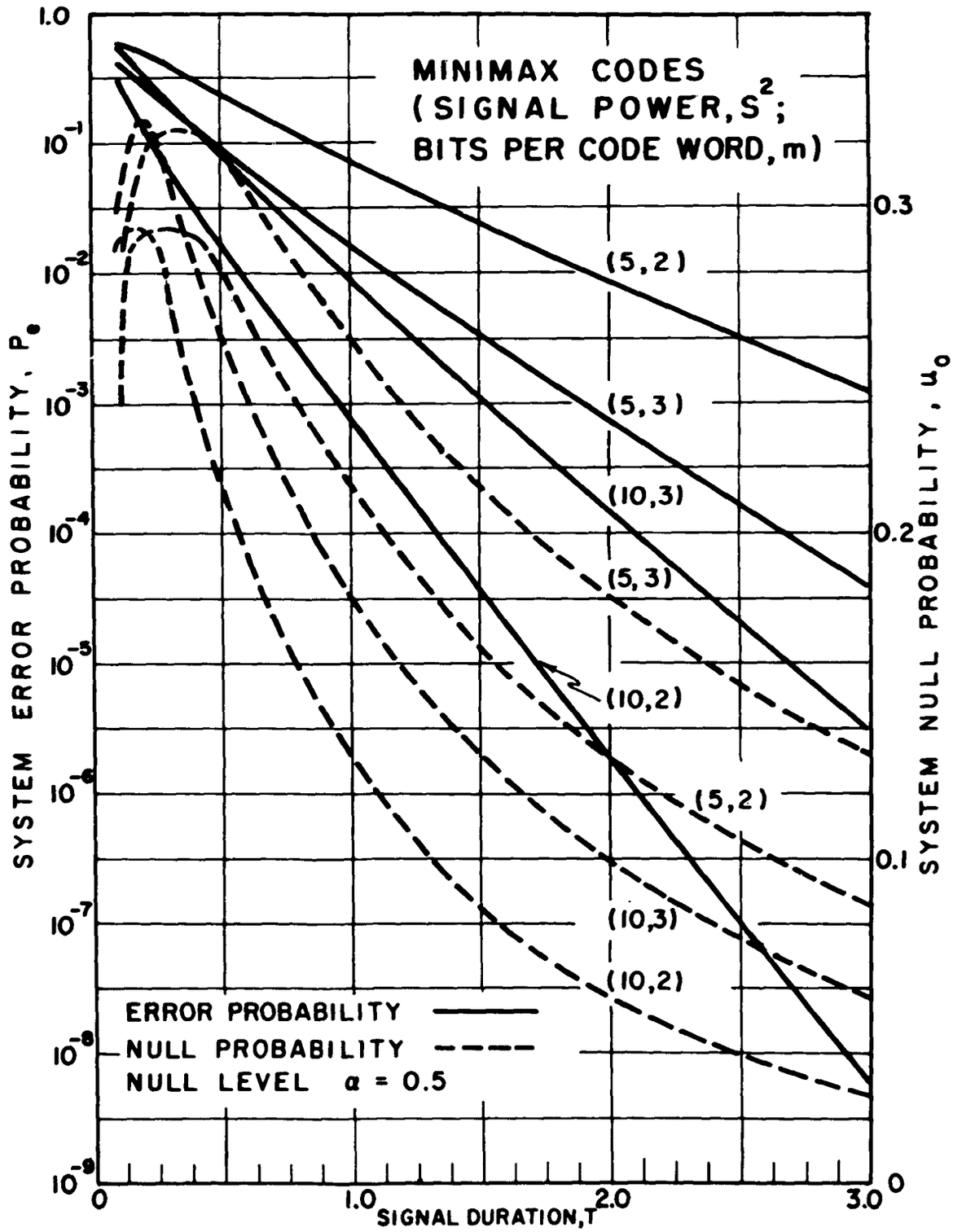

FIG. 6

PERFORMANCE OF THE MINIMAX CODES, WHEN THE NOISE POWER DENSITY SPECTRUM IS $(1+0.0001\,\omega^2)$

$$\xi_1^2 = \frac{S^2 T^2}{\sum_{j=1}^{m} \sigma_j^2} \tag{75}$$

and

$$\alpha_1 = \frac{k_1 \sum_{j=1}^{m} \sigma_j^2}{2S^2 T^2} < 1 \tag{76}$$

A pessimistic expression for the null probability is

$$u_0 \leq \frac{1}{2} \left\{ \Phi \left[\frac{\sqrt{m}\, \xi_1}{\sqrt{2}} (1 + \alpha_1) \right] - \Phi \left[\frac{\xi_1}{\sqrt{2}} (1 - \alpha_1) \right] \right\} \tag{77}$$

These relationships are plotted in Figures 5 and 6 for the case in which the noise power density spectrum is $(1 + 0.01\, \omega^2)$ and $(1 + 0.0001\, \omega^2)$ respectively. Both the two bits per code word and the three bits per code are shown, each for two values of signal power. These curves correspond to holding α_1 constant at 0.5. Comparisons of the performance of the minimax code with the other codes are given at the conclusion of this section.

2. <u>Equal Separation Codes</u>

The equal separation code is an orthogonal digit code with all spearation functions equal and the sum of these separation functions as large as possible. For this code the separation function is

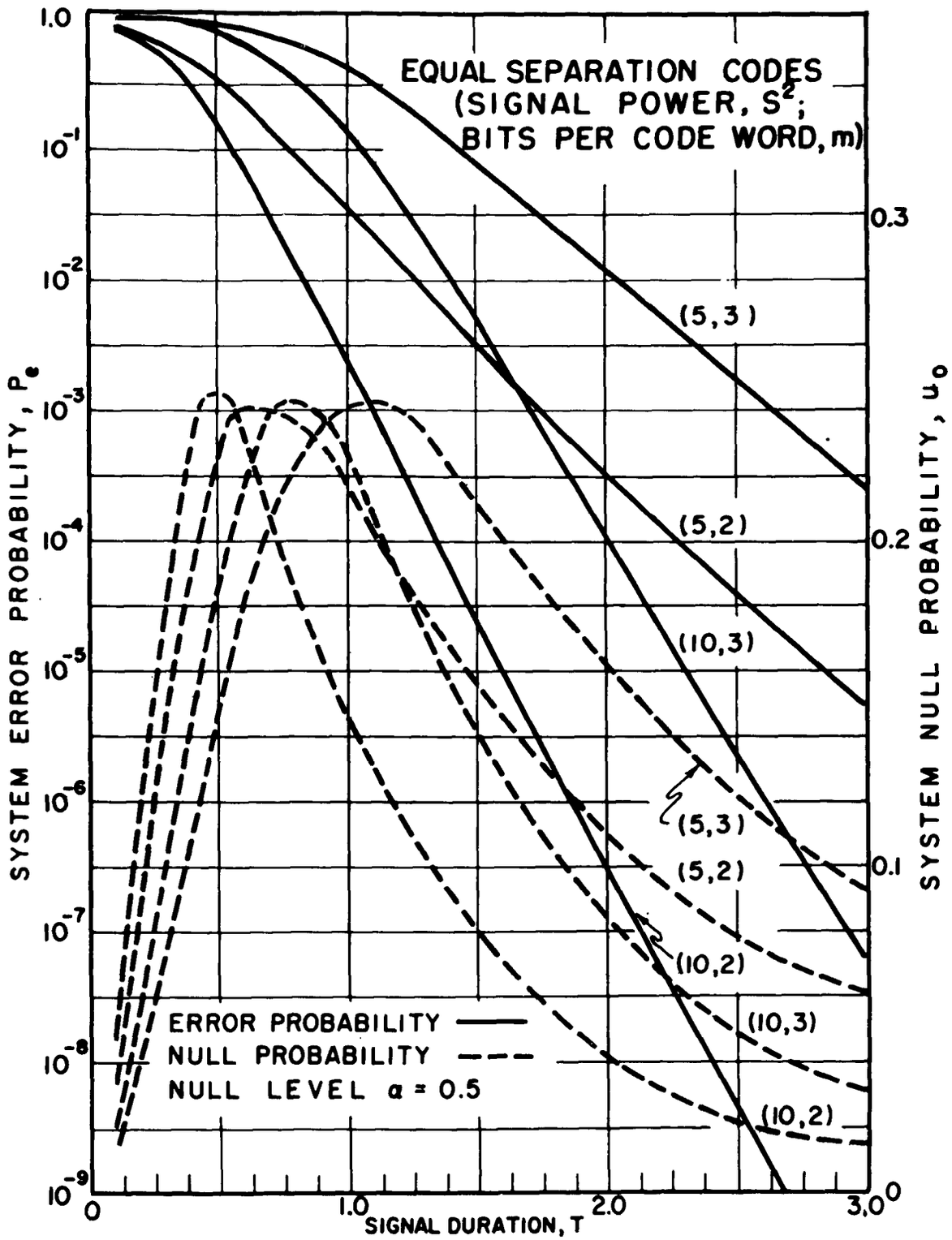

FIG. 7

PERFORMANCE OF THE EQUAL SEPARATION CODES WHEN THE NOISE POWER DENSITY SPECTRUM IS $(1+0.01\,\omega^2)$.[38]

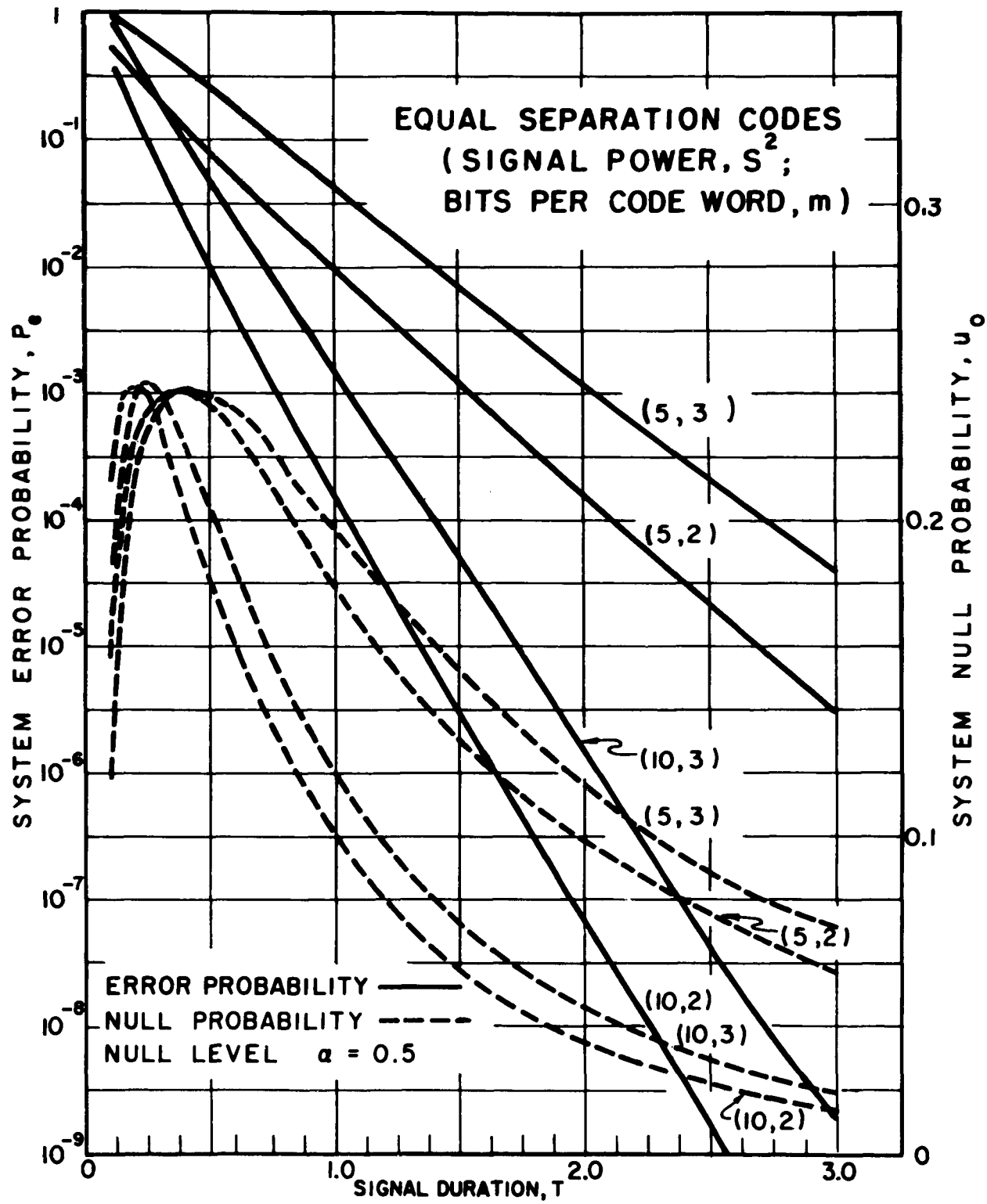

FIG. 8

PERFORMANCE OF THE EQUAL SEPARATION CODES WHEN THE NOISE POWER DENSITY SPECTRUM IS $(1+0.0001\,\omega^2)$.

$$\xi_s^2 = \frac{2^{m-1}\, s^2_T}{\sum_{k=1}^{2^m-1} \sigma_k^2} \tag{78}$$

$$\alpha_s = \frac{k_1}{k_c} = \frac{k_1}{2\xi_s^2} \tag{79}$$

$$P_s = \frac{1}{2}\left\{ 1 - \operatorname{erf}\left[\frac{\xi_s}{\sqrt{2}} (1 + \alpha_s) \right] \right\} \tag{80}$$

and

$$P_e \leq 1 - (1 - P_s)^{2^m-1} \tag{81}$$

The pessimistic expression for the null probability reduces to

$$u_o \leq \frac{1}{2}\left\{ \operatorname{erf}\left[\frac{\xi_s}{\sqrt{2}} (1 + \alpha\ ) \right] - \operatorname{erf}\left[\frac{\xi_s}{\sqrt{2}} (1 - \alpha\ ) \right] \right\} \tag{82}$$

These relations are shown in Figures 7 and 8 for the same conditions as previously given for the minimax code. Comparisons with other codes are made at the end of this section.

3. <u>Equidistant Codes</u>

The equidistant code is the binary digit analog of the equal separation code. For this code the separation function is

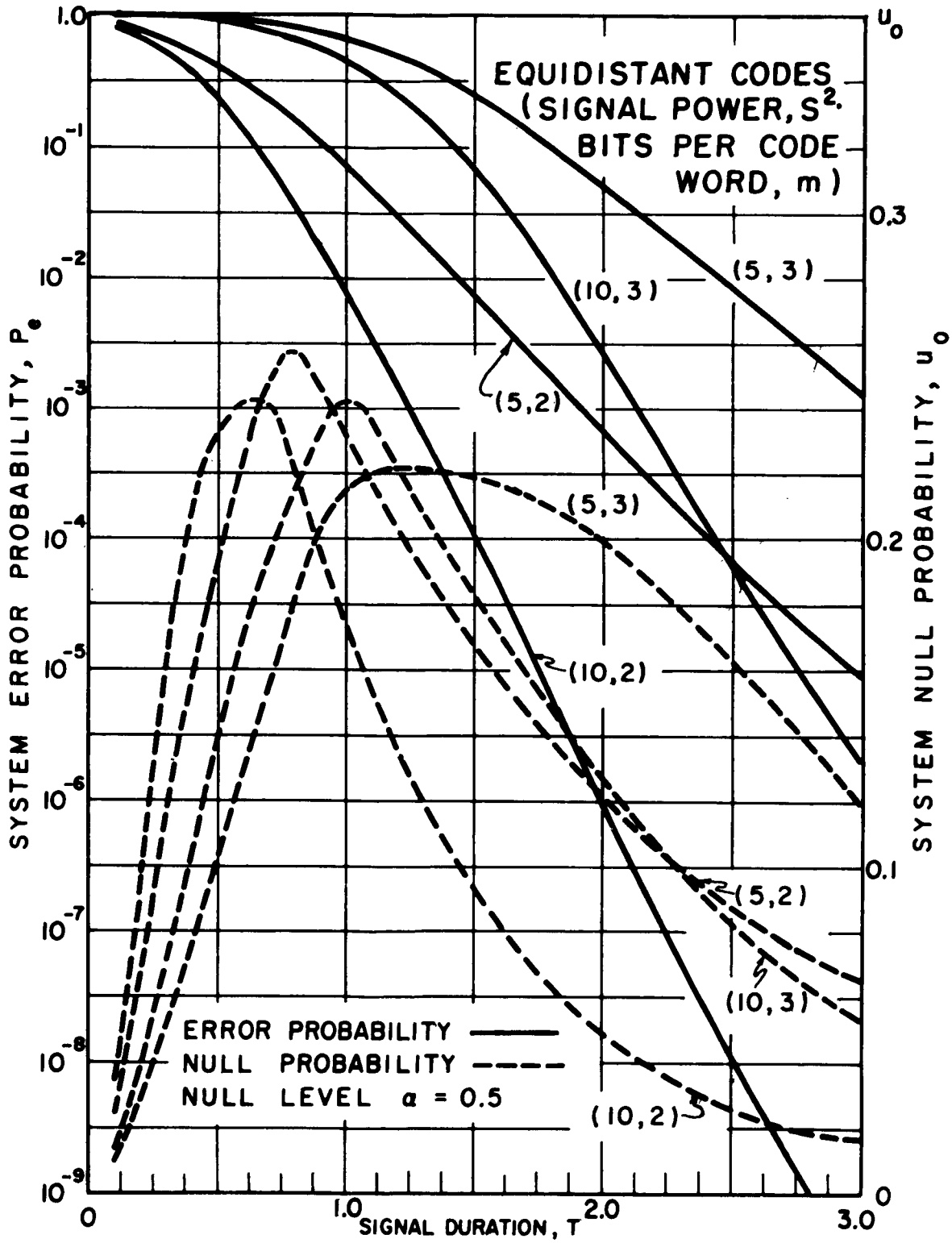

FIG. 9

PERFORMANCE OF THE EQUIDISTANT CODES WHEN THE NOISE POWER DENSITY SPECTRUM IS $(1 + 0.01\,\omega^2)$

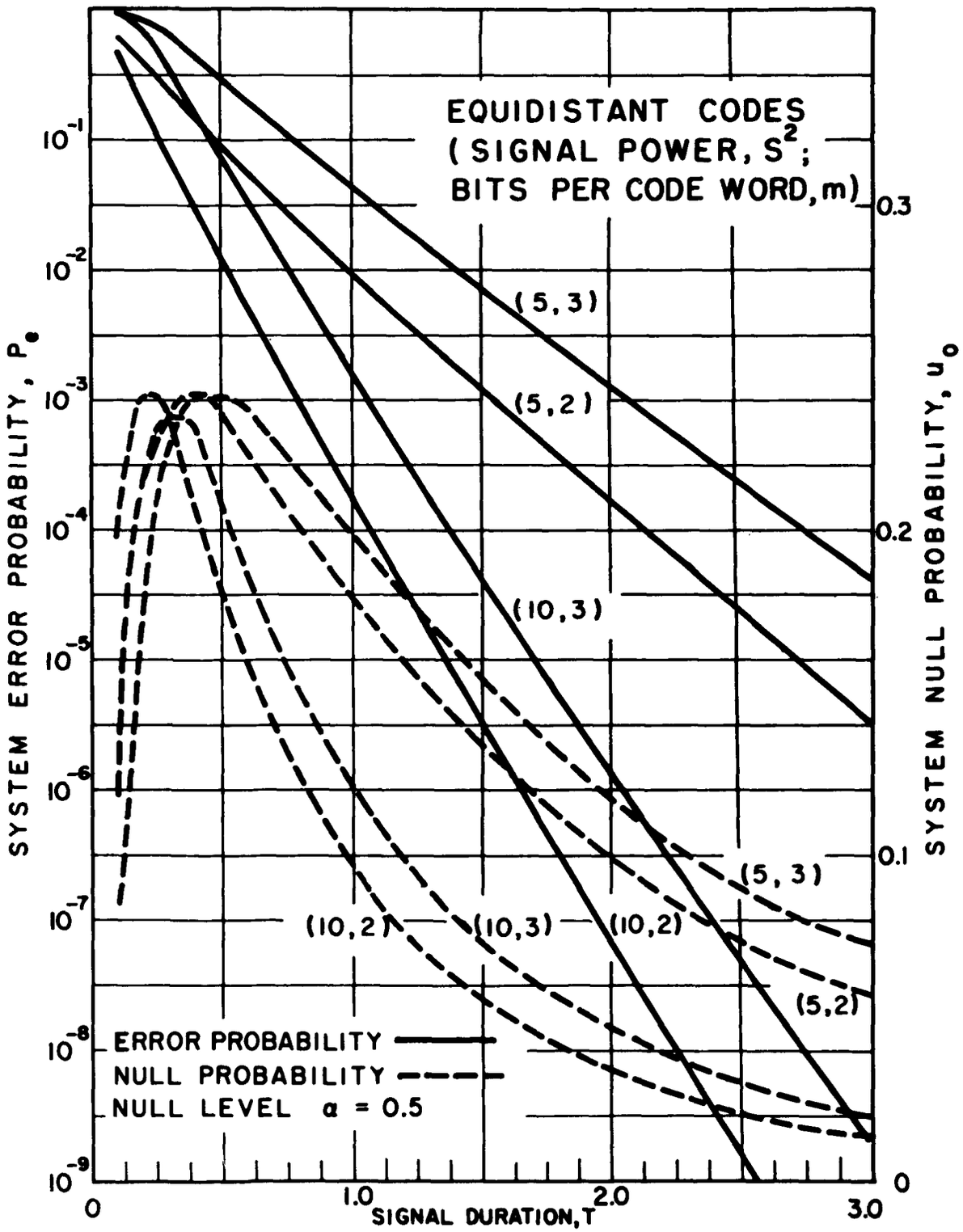

FIG. 10

PERFORMANCE OF THE EQUIDISTANT CODES WHEN THE NOISE POWER DENSITY SPECTRUM IS $(1+0.0001\omega^2)$

$$\xi_d^2 = \frac{2^{m-1}\ S^2 T}{(2^m-1)\ \tau_1^2} \tag{83}$$

in which

$$\tau_1^2 = \frac{(2^m-1)\ \pi^2 B^2}{T^2} + A^2 \tag{84}$$

and

$$\alpha_d = \frac{k_1}{2\xi_d^2} \tag{85}$$

In terms of these parameters, the expressions for the system error probability and system null probability are analogous to those for the equal separation codes if ξ_s is replaced by ξ_d and α_s by α_d. Figures 9 and 10 show the performance of this code for the same conditions as the other codes shown in Figures 5 to 8.

4. Comparisons

Figures 5 to 10 illustrate the performances of the minimax, equal separation, and equidistant codes when the interference is additive colored noise. Two specific noise power density spectra are considered $(1 + 0.01\ \omega^2)$ and $(1 + 0.0001\ \omega^2)$ respectively. For each code the two bits per code word and the three bits per code word cases are shown, each for two values of signal power. The normalized null level is held fixed at 0.5.

As can be seen from the figures, for high information rate and a noise power density spectrum that is far from white (this

corresponds to designing signals for a narrow bandwidth communication system), the minimax code performs best. For low information rate and a nearly white noise power density spectrum, the equal separation code is better.

In general, increasing the signal duration results in a much greater decrease in both the error and null probabilities than does increases in average power. This effect is particularly pronounced so far as the error probability is concerned if the uncertainty region is small.

Comparison of the equal separation code with the equidistant code shows the superiority of the former. This behavior may be generalized by comparing any given orthogonal digit code with its binary digit analog. In both cases the error probability and the null probability are the same functions of the corresponding separation and uncertainty parameters. However, the uncertainty parameters are the same but the separation functions differ. For fixed values of the system parameters, the separation function of the orthogonal digit code is always larger than the separation function of the corresponding binary digit code. Thus, for the same average power and noise conditions, a communication link using orthogonal digit coding is operating at an effectively greater signal-to-noise ratio than if a binary digit code were used.

V. SYSTEM DESIGN

To select the proper signalling alphabet for a given communication link, a flexible method of signal design is needed. Such a method, based on the utilization of a digital computer is considered below. This is followed by a discussion of various techniques for implementing an uncertainty-region-reception, orthogonal-digit-code receiver.

A. Signal Design

By means of a general purpose digital computer, one can select a near optimum choice of transmittible signals for a set of given design restrictions. To illustrate the technique consider a case in which the constraints on the design are the information rate in bits per second, average power, noise level in the channel, and the bandwidth. The bandwidth constraint is transferable into the choice of a noise power density spectrum -- i.e., into the selection of b based on the weighting function $(1 + b^2\omega^2)$. In terms of the absolute level $(A^2 + B^2\omega^2)$, the noise level of the channel gives the value of A^2, while the bandwidth constraint, b, gives the ratio B/A. Specifying both channel parameters hence determines both A and B.

The iterative process is started by selecting a value for the signal duration, T, such that $4\pi T/b$ is well above the Nyquist

rate. Several block codes are then generated by the computer, experience indicating that about 60 percent of the digits should be information digits and the rest parity check digits. The number of information digits selected will be based on the specified data rate and the duration of the signals. Those codes having the greatest Hamming distances are selected for further processing. From these code structures the corresponding separation functions are evaluated. This permits the evaluation of the performance of the codes when uncertainty reception is not used. From a specification on the percentage of nulls permitted, the corresponding reliability -- i.e., error probabilities -- can be determined. The code with the minimum error probability is tentatively selected as the best. If this performance is satisfying, this code represents a suitable solution. If not, or if a near optimum solution is desired, the process is repeated with other codes at other values of signal duration.

Since there is no strictly deterministic procedure for evaluating when the optimum solution is reached, it is possible to find that the specifications cannot be satisfied within a reasonable computation time. As a practical solution, the specifications should probably be relaxed, as they may be impossible to satisfy. When a code with the desired specifications is found, the corresponding signal set $\{s_i(t)\}$ may be formally found by the

matrix operations,

$$\mathcal{G} = \mathcal{M}\mathcal{A}\mathcal{E} \tag{86}$$

in which the elements of the column matrix $\mathcal{G}$ are the members of the signal set. $\mathcal{M}$ is the matrix corresponding to selected binary block code digits with 0 replaced by -1. This is a u by 2^m matrix, u being the number of digits per code word and m being the number of message bits. The matrix $\mathcal{A}$ is a square diagonal matrix of size u by u, the elements being

$$\begin{aligned} a_{ik} &= 0 && \text{for } i \neq k \\ &= a_{kk} && \text{for } i = k \end{aligned}$$

in which a_{kk} is given by relation (11). The $\mathcal{E}$ matrix is a column matrix of u rows, the elements being the ordered set of eigenfunctions $\{\varphi_j(t)\}$.

For communication systems with variable interference conditions and an available feedback loop, sophisticated techniques can be used such as variable coding schemes. For example, the noise conditions in the channel can be estimated at the receiver and from these estimates the best code picked from the set of available codes. The transmitter is informed through the feedback channel to correspondingly change the transmission and the receiver is adjusted to receive the new alphabet. Thus, an

adaptive feature is incorporated into the system with considerable improvement in the performance of the communication system. At the other range of possibilities there is the simple discarding decision feedback techniques which have already been shown to be effective.

B. Implementation of the Uncertainty-Region-Reception Receiver

To simplify the instrumentation of the uncertainty-region-reception receiver, it is desirable to employ orthogonal digit codes with matrix $\mathcal{A}$ of equation (86) chosen to be a binary group code[4] with all zeros replaced by minus ones. In group codes the distance in digits between any two code words is the same as the weight of the code word (number of ones in the code word) obtained by addition modulo two of the original two words. But since group codes are such that the addition modulo two of any two code words is another code word, the distance in digits between any two code words is the same as the weight of another code word. If one of the code words is the identity word, the distance in digits is the weight of that one of the two code words which is not the identity. For any particular code word the set of distances in digits of that code word from each of the other code words is thus the same as the set of weights of each code word.

Using the properties of group alphabets, one can replace

the decision process at the receiver by the following equivalent operation. Eliminate the identity signal from the signalling set, $\{s_i(t)\}$, and form for the remaining 2^m-1 signals the sums

$$S_i = \sum_{k=1}^{q} \frac{y_k a_{ik}}{\sigma_k^2} \tag{87}$$

in which the summation is performed only over the positive orthogonal digits of each signal. The simplified equivalent receiver prints the signal $s_i(t)$ corresponding to the largest S_i exceeding the threshold level, $k_1/2$. If none of the sums, S_i, exceeds the threshold level, a null is printed which may be removed by retransmission requested through the feedback channel.

The receiver can form the set of levels $\{S_i\}$ by crosscorrelating the set $\{\frac{a_{ik}}{\sigma_k^2}\varphi_k(t)\}$ with $y(t)$ for all $k = 1,2,3, \ldots,$ u; the crosscorrelators are followed by sign inverters and (2^m-1) accumulators. The outputs of the accumulators are the desirable set $\{S_i\}$. The suggested receiver circuit requires only u correlations. For instance, for minimax codes (2^m-1) are replaced by m correlations. The receiver may also be implemented using a bank of matched filters. Consider the set of functions, $\{g_i(t)\}$, defined by

$$g_i(t) = \sum_{k=1}^{q} \frac{a_{ik}\varphi_k(t)}{\sigma_k^2} \tag{88}$$

in which summation is to be taken over positive digits only. Thus, to each $s_i(t)$ corresponds a specific $g_i(t)$. Equation (87) can then be replaced by

$$S_i = \int_0^T g_i(t)y(t)\,dt \quad , \qquad 0 \leq t \leq T \tag{89}$$

If a new set of functions is defined by

$$h_i(T-t) = g_i(t) \tag{90}$$

one can interpret equation (89) as representing linear filtering of $y(t)$ using filters with impulsive responses $h_i(t)$. Thus, alternately the set of detected levels $\{S_i\}$ necessary for the decision at the receiver can be obtained using a bank of linear filters.

VI. GEOMETRIC INTERPRETATION OF UNCERTAINTY REGION RECEPTION

Consider a u-dimensional system of rectangular coordinates.* Corresponding to each pair of signals, such as $s_i(t)$, $s_j(t)$, define a fixed vector A_{ij}, the projections of which on the coordinate vectors are of length

$$\frac{a_{ik} - a_{jk}}{\sigma_k^2} \quad , \quad k = 1,2,3 \ldots, u$$

Corresponding to each received signal, $y(t)$, define a vector Y such that the projections of the Y-vector on the coordinate vectors are of length $y_k y_k$ being the $k^{\underline{th}}$ coefficient of the orthogonal series expansion of $y(t)$. Form the dot products

$$(A_{ij}, Y) \tag{91}$$

for all pairs of signals. If the dot product exceeds the uncertainty parameter k_i, $s_i(t)$ is more likely the signal sent than $s_j(t)$. If the absolute value of the dot product is less than k_i, no decision is made. If the dot product is less than k_i, $s_i(t)$ is less likely the signal sent than $s_j(t)$.

The set of inequalities corresponding to the uncertainty region reception decision rules can be interpreted as follows. For any pair of signals $s_i(t)$ and $s_j(t)$ of the transmittible set,

* The u-dimensional Euclidean space

the u-dimensional space is divided into three distinct regions by two parallel (u-1)-dimensional hyperplanes normal to the vector A_{ij}. The two hyperplanes are defined by equations

$$(A_{ij},Y) = k_1 \tag{92}$$

and

$$(A_{ij},Y) = - k_1 \tag{93}$$

respectively. The region between the two hyperplanes is the region of withheld decision. The region located on the far side of the hyperplane looking from the origin in the direction of orientation of the vector A_{ij} is the region of acceptance for signal $s_i(t)$. The region located on the far side of the hyperplane looking from the origin in the direction opposite to the orientation of the vector A_{ij} is the region of acceptance for signal $s_j(t)$. Repeating the above procedure for the $\binom{2^m}{2}$ possible pairs of signals of the transmittible set, the generated hyperplanes will enclose a polytope in the u-dimensional space. The interior of the polytope is the uncertainty region. To find the distances from the origin to the hyperplanes of the polytope one can use two methods: one is a direct extension of the geometrical analysis used in three dimensional spaces to the multidimensional space, the second one uses Lagrange's method of indeterminate multipliers. This latter technique is used in Appendix B. The distance from the origin to the hyperplane corresponding to signals $s_i(t),s_j(t)$

is found to be

$$d_{ij} = \frac{k_1}{\left[\sum_{k=1}^{u} \frac{(a_{ik}-a_{jk})}{\sigma_k^4}\right]^{\frac{1}{2}}} \tag{94}$$

The distances between the corresponding two parallel hyperplanes at the uncertainty-region boundaries is 2 d_{ij}.

For orthogonal digit codes the distance from the origin to the hyperplane reduces to

$$d_{ij} = \frac{\frac{k_1}{4\lambda S^2 T^2}}{\left[\left(\sum_{k=1}^{u} \delta_{ijk}\sigma_k^2\right)\left(\sum_{k=1}^{u} \sigma_k^2\right)\right]^{\frac{1}{2}}} \tag{95}$$

in which δ_{ijk} is zero if the signs of the corresponding orthogonal digits a_{ik}, a_{jk} are the same and unity if the signs differ.

$$\lambda = \sum_{k=1}^{u} \delta_{ijk} \tag{96}$$

as before.

For the minimax code, $u = m$ and λ ranges from 1 to m. For the equal separation code, $u = 2^m-1$, and λ is 2^{m-1} for all pairs of signals. In this case

$$d_{ij} = \frac{k_1}{\left[\dfrac{2^{n+1}S^2T}{\left(\sum_{k=1}^{n}\delta_{ijk}\sigma_k^2\right)\left(\sum_{k=1}^{2^m-1}\sigma_k^2\right)}\right]^{\frac{1}{2}}} \tag{97}$$

Note that the members of the set of variances, $\{\sigma_k^2\}$, are not all equal, but depend on the pair of signals being considered. Thus, for the equal separation code, though all the separations are equal, the distances to the hyperplanes enclosing the polytope of the uncertainty region are unequal. Equality can be achieved only by varying the uncertainty parameter k_1 with the resulting complications in the processing of signals at the receiver. For the equidistant code not only are the separation functions equal but also the distances to the hyperplanes enclosing the polytope of the uncertainty region are equal. The expression for the distance, d_{ij}, reduces in this case to

$$d_{ij} = d = \frac{k_1}{\left\{\dfrac{2^{m+1}S^2T}{(2^m-1)\ \tau_1^2}\right\}^{\frac{1}{2}}} \tag{98}$$

in which τ_1^2 is the lowest eigenvalue corresponding to a signal duration $T/2^m-1$.

The processing of the signals at the receiver can be interpreted in terms of the geometric model as follows. If the tip of the received vector Y falls inside the uncertainty region polytope,

a null decision is made. This decision could later be replaced by information received by repetition requested by means of a feedback channel. If the tip of the received vector Y falls outside the uncertainty region polytope, the signal corresponding to the largest distance of its hyperplane to the tip of vector Y is considered the most likely signal sent.

APPENDIX A

Background: Detection of Signals in Colored Noise

In a broad sense, a receiver is a computer -- albeit in many cases a fairly simple analog computer. From the incoming signal, $y(t)$, the receiver calculates which of the possible transmitted signals $\{s_i(t)\}$ is most likely the signal sent. Formally, the receiver may be considered to evaluate the a posteriori probabilities $\{p[y(t)/s_i(t)]\}$ for each possible transmitted signal. Single-valued functions of these a posteriori probabilities may actually be present in the receiver as voltage levels. For completely automatic operation these voltage levels are compared with preset thresholds or each other as a means of deciding the most likely signal sent. Alternatively, the voltage levels can be presented to an operator for final decision. The choice of the preset threshold levels depends on a priori signal probabilities, relative costs of making errors, and value judgements. For example, threshold levels can be used which correspond to minimum error probability.

When the noise is additive, the conditional probabilities $\{p[y(t)/s_i(t)]\}$ are simply the probabilities that interference had the waveforms $\{n_i(t)\}$ in which

$$n_i(t) = y(t) - s_i(t)$$

The most likely interference waveform corresponds to the most likely signal. To determine the most likely interference waveform, the possible signals and the received signal are sampled at instants of time t_Δ apart such that there are N samples of the signal duration T. The channel is considered distortionless so that the $k^{\underline{th}}$ sample of the transmitted signal causes the $k^{\underline{th}}$ sample of the received signal. If s_{ik} is the value of $s_i(t)$ at $t = kt_\Delta$ and y_{tk} is the value of $y(t)$ at $t = kt_\Delta$, then

$$p[y(t)/s_i(t)] = \lim_{t_\Delta \to 0} p[y_{t1}, y_{t2}, \cdots y_{tN}/s_{i1}, s_{i2}, \cdots s_{iN}]$$

is the same as expecting the interference to have the sampled values

$$n_{i1} = y_{t1} - s_{i1}$$

$$n_{i2} = y_{t2} - s_{i2}$$

$$n_{iN} = y_{tN} - s_{iN}$$

Note that this procedure is satisfactory if the total noise power is finite. If the total noise power is not finite, the "samples" become the integrated values of the signals over each duration t_Δ. Alternatively, the noise power spectrum can be truncated at some high frequency f and then as $t_\Delta \to 0$, $f = \frac{1}{t_\Delta} \to \infty$.

When the interference is white gaussian noise the sampled values of the interference are independent and the analysis is simplified. In this case the joint probability density that the sampled values of the noise are $n_{i1}, n_{i2}, \ldots n_{ik}, \ldots n_{iN}$ can be written as the product of the individual or marginal probabilities. Thus

$$p(n_{i1}, n_{i2}, \ldots n_{iN}) = p(n_{i1})p(n_{i2}) \ldots p(n_{iN})$$

in which

$$p(n) = \frac{1}{\sqrt{2\pi\sigma^2 f}} e^{-n^2/2\sigma^2 f} \quad , \quad f = \frac{1}{t_\Delta}$$

since $p(n)$ has a gaussian distribution and the noise power per unit bandwidth is σ^2. The remainder of the procedure for determining the optimum receiver is straightforward. Note that

$$p(n_{i1}, n_{i2}, \ldots n_{iN}) = \frac{1}{\sqrt{2\pi\sigma^2 f}} e^{-1/2\sigma^2 f \sum_{k=1}^{N} n_{ik}^2}$$

is such that the values of the noise samples appear only in the exponent

$$-\frac{1}{2\sigma^2 f} \sum_{k=1}^{N} n_{ik}^2$$

This exponent corresponds to

$$-\frac{1}{2\sigma^2 f}\sum_{k=1}^{N}(y_{tk}-s_{ik})^2$$

or in the limit, as $t_\Delta = \frac{1}{f} \longrightarrow 0$, to

$$-\frac{1}{2\sigma^2}\int_0^T [y(t)-s_i(t)]^2\,dt$$

in which T is the duration of the signals.

If the terms are multiplied out

$$-\frac{1}{2\sigma^2}\left[\int_0^T y^2(t)dt - 2\int_0^T y(t)s_i(t)dt + \int_0^T s_i^2(t)dt\right]$$

and the first term is discarded as being common to all signals, while the last term is discarded since the value is known before any signal has been received. The result (eliminating the scale factor $1/\sigma^2$)

$$\int_0^T y(t)s_i(t)dt$$

gives the quantities the receiver should compute for each received signal.

Letting $f_i(t) = s_i(t)$ the result is that for optimum detection the received signal $y(t)$ should be correlated with each $f_i(t)$ and the outputs of the correlators (or the equivalent) be used to decide which signal was sent. For the case in which the interference is white noise, $f_i(t)$ is the same as the corresponding signal $s_i(t)$. As will be seen, for the colored noise case the optimum receiver is similar, but $f_i(t)$ will not only include the signal structure, but the noise structure as well.

When the interference is colored noise the joint probability $p(n_{i1}, n_{i2}, \ldots n_{iN})$ cannot be written as the product of the marginal probability $p(n)$ because the noise is no longer independent from one sample to another. The fact that the noise is gaussian can be directly applied by using the Nth order joint gaussian distribution. The procedure is algebraically complex but the difficulties are not insurmountable. To reduce this complexity matrix notation will be used.

The joint gaussian distribution is not readily written in terms of the corresponding power density spectrum, but rather in terms of the autocorrelation function. Let $R(\tau)$ be the autocorrelation function of the noise -- i.e., the Fourier transform of the noise power density spectrum. Let R be the matrix

$$R = \begin{bmatrix} R_{11} & R_{12} & \cdots & R_{1N} \\ R_{21} & R_{22} & \cdots & \cdot \\ \cdot & \cdot & \cdots & \cdot \\ R_{N1} & \cdot & \cdots & R_{NN} \end{bmatrix}$$

in which $R_{mn} = R(mt_{\Delta} - nt_{\Delta})$. Let λ be the inverse of R. The joint noise distribution is given by

$$p(n_{i1}, n_{i2}, \ldots n_{iN}) = \frac{1}{(2\pi)^{N/2}|\lambda|^{1/2}} \exp\left\{-\frac{1}{2}\sum_{m=1}^{N}\sum_{n=1}^{N}\lambda_{mn}n_{im}n_{in}\right\}$$

in which $|\lambda|$ is the determinant corresponding to λ.

If, as for the case in which the interference was additive white noise, it is noted that the probability is single-valued dependent on the exponent, it follows that the receiver need only evaluate

$$-\frac{1}{2}\sum_{m=1}^{N}\sum_{n=1}^{N}\lambda_{mn}n_{im}n_{in} \text{ for each } i.$$

Since the noise is additive, this is the same as

$$-\frac{1}{2}\sum_{m=1}^{N}\sum_{n=1}^{N}\lambda_{mn}(y_{tm} - s_{im})(y_{tn} - s_{in})$$

or

$$- \frac{1}{2} \sum_{m=1}^{N} \sum_{n=1}^{N} \lambda_{mn}(y_{tm}y_{tn} - y_{tm}s_{in} - y_{tn}s_{im} + s_{im}s_{in})$$

The first term is independent of the signal, $s_i(t)$, and can thus be discarded. The last term is a priori known before any signal has been received. It can therefore be included in the decision thresholds and need not be recalculated each time a signal is received. In addition, $\lambda_{mn} = \lambda_{nm}$, and thus

$$\sum_{m=1}^{N} \sum_{n=1}^{N} \lambda_{mn}y_{tm}s_{in} = \sum_{m=1}^{N} \sum_{n=1}^{N} \lambda_{mn}y_{tn}s_{im}$$

Hence the receiver need only compute the test statistics

$$\sum_{m=1}^{N} \sum_{n=1}^{N} \lambda_{mn}y_{tm}s_{in} \qquad \text{for each } i$$

By letting

$$f_{im} = \sum_{n=1}^{N} \lambda_{mn}\, s_{in}$$

the test statistics become

$$\sum_{m=1}^{N} f_{im}y_m$$

or as $t_\Delta \longrightarrow 0$, $N \longrightarrow \infty$

$$\int_0^T f_i(t)y(t)\,dt$$

The result for colored noise is similar to that obtained for white noise -- namely, that correlation detection is optimum. Instead of the locally generated signals at the receiver being the same as the signals sent

$$f_i(t) = s_i(t) \qquad \text{for each } i \quad ,$$

it is determined from the sampled values

$$f_{im}(t) = \sum_{n=1}^{N} \lambda_{mn} s_{in}$$

To determine a more suitable relation for $f_i(t)$ note that the above expression represents a set of linear algebraic equations for $[f_{i1}, f_{i2}, \ldots f_{iN}]$ in terms of $[s_{i1}, s_{i2}, \ldots s_{iN}]$. Solving this set of equations for the sampled values of $s_i(t)$ gives

$$s_{in} = \sum_{m=1}^{N} R_{nm} f_{im}$$

or in the limit as $t_\Delta \longrightarrow 0$, $N \longrightarrow \infty$,

$$s_i(t) = \int_0^T R(t-\tau)\ f_i(\tau)\ d\tau$$

in which the sampled values of $f_i(\tau)$ are proportional to the samples f_{im}. This is the basic equation from which $f_i(t)$ is determined. As an example, when the noise is white, $R(\tau)$ is a delta function

$$R(\tau) = 2\sigma^2 \delta(\tau)$$

Thus

$$s_i(t) = 2\sigma^2 f_i(t)$$

or, neglecting the scale factor

$$f_i(t) = s_i(t)$$

To design an optimum receiver it is necessary to solve the integral equation

$$s_i(t) = \int_0^T R(t-\tau)\ f_i(\tau)\ d\tau$$

for the waveforms $f_i(t)$. Once these waveforms are known the received signal is correlated (or an equivalent operation is performed) with each $f_i(t)$ and the outputs of the correlators are compared.

To determine $f_1(t)$, a procedure can be used which is similar to that used in solving ordinary differential equations. The homogeneous integral equation

$$\sigma^2\varphi(t) = \int_0^T R(t-\tau)\ \varphi(\tau)\ d\tau$$

is solved for first. This equation has the trivial solution $\varphi(t) = 0$. It also has nontrivial solutions for certain definite values of σ^2. Each value of σ^2 for which there is a nontrivial solution is called an eigenvalue, and the corresponding function $\varphi(t)$ is called an eigenfunction.

The solutions have the same character as those of an ordinary differential equation plus boundary conditions. For example, consider the ordinary differential equation

$$\frac{d^2y(t)}{dt^2} + \omega^2 y(t) = 0$$

This has the trivial solution $y(t) = 0$. It has the general nontrivial solution

$$y(t) = A \cos \omega t + B \sin \omega t$$

in which A and B are arbitrary, and ω can be any constant. If,

however, we impose the boundary conditions

$$y(0) = 0$$

$$y(1) = 0$$

then the solution becomes

$$y(t) = B \sin \pi n t$$

Thus, only if the constant ω equals πn for $n = 0, \pm 1, \pm 2, \ldots$ is there a nontrivial solution to the differential equation which also satisfies the boundary conditions. These values of ω for which a nontrivial solution exists are called eigenvalues and the corresponding functions are called eigenfunctions.

A homogeneous ordinary differential equation with boundary conditions can be converted to an integral equation. For example, consider the above differential equation with the boundary conditions. This corresponds to the integral equation

$$\omega^2 y(t) = \int_0^T K(t,\tau)\, y(\tau)\, d\tau$$

in which $K(t,\tau)$, the kernel, is

$$K(t,\tau) = (1 - t)\tau \qquad 0 \leq \tau \leq t \leq 1$$

$$= t(1 - \tau) \qquad 0 \leq t \leq \tau \leq 1$$

Because of the relation between integral and differential equations, one valuable technique for solving integral equations is to determine the corresponding differential equation.

This correspondence suggests, as is true, that the solutions to the homogeneous integral equation are orthogonal. For convenience, consider the solution corresponding to the lowest value of σ^2 to be the first eigenfunction, the next lowest, the second eigenfunction, and so on. The orthogonal property makes it easy to expand the signal waveforms in terms of these functions. Letting

$$s_i(t) = \sum_{n=1}^{\infty} C_n \varphi_n(t)$$

since the $\{\varphi_n(t)\}$ are orthogonal

$$C_n = \frac{\int_0^T s_i(t)\varphi_n(t)\, dt}{\int_0^T \varphi_n^2(t)\, dt}$$

If the eigenfunctions are normalized so that

$$\int_0^T \varphi_n^2(t)\, dt = 1 \qquad \text{for all } n$$

then

$$C_n = \int_0^T s_i(t)\varphi_n(t)\ dt$$

To solve the integral equation

$$s_i(t) = \int_0^T R(t-\tau)f_i(\tau)\ d\tau$$

$s_i(t)$ is expanded using this orthogonal set

$$s_i(t) = S_{i1}\varphi_1(t) + S_{i2}\varphi_2(t) + \ldots + S_{ik}\varphi_k(t) + \ldots$$

in which

$$S_{ik} = \int_0^T s_i(t)\varphi_k(t)\ dt$$

and a series solution is sought for $f_i(t)$ of the form

$$f_i(t) = F_{i1}\varphi_1(t) + F_{i2}\varphi_2(t) + \ldots + F_{ik}\varphi_k(t) + \ldots$$

The $k^{\underline{th}}$ coefficient of this expansion, F_{ik}, can be found by multiplying both sides of the integral equation by $\varphi_k(t)$ and then integrating from 0 to T with respect to T. The result is

$$\bar{r}_{ik} = \frac{S_{ik}}{\sigma_k^2}$$

Thus

$$f_i(t) = \sum_{k=1}^{\infty} \frac{S_{ik}}{\sigma_k^2} \varphi_k(t)$$

One method of correlating the received signal $y(t)$ with $f_i(t)$ is shown in Figure A-1. Each voltage divider is set to correspond to a coefficient of the expansion -- i.e., the $k^{\underline{th}}$ divider corresponds to the factor S_{ik}/σ_k^2. Since σ_k^2 is greater for larger values of k, the contribution to the sum for large k is usually small. Thus a near optimum practical system need not require a great many correlators and dividers.

Another important point to note that the $k^{\underline{th}}$ component of the output sum is proportional to

$$\int_0^T s_i(t)\varphi_k(t)\, dt + \int_0^T n(t)\varphi_k(t)\, dt$$

The first term is the mean output, the second the effect of the noise. Since $n(t)$ is gaussian, the noise present in each component of the output sum, and hence in the sum itself, is also gaussian. Moreover, the noise present in each component is independent of the noise in any of the other components -- i.e., the

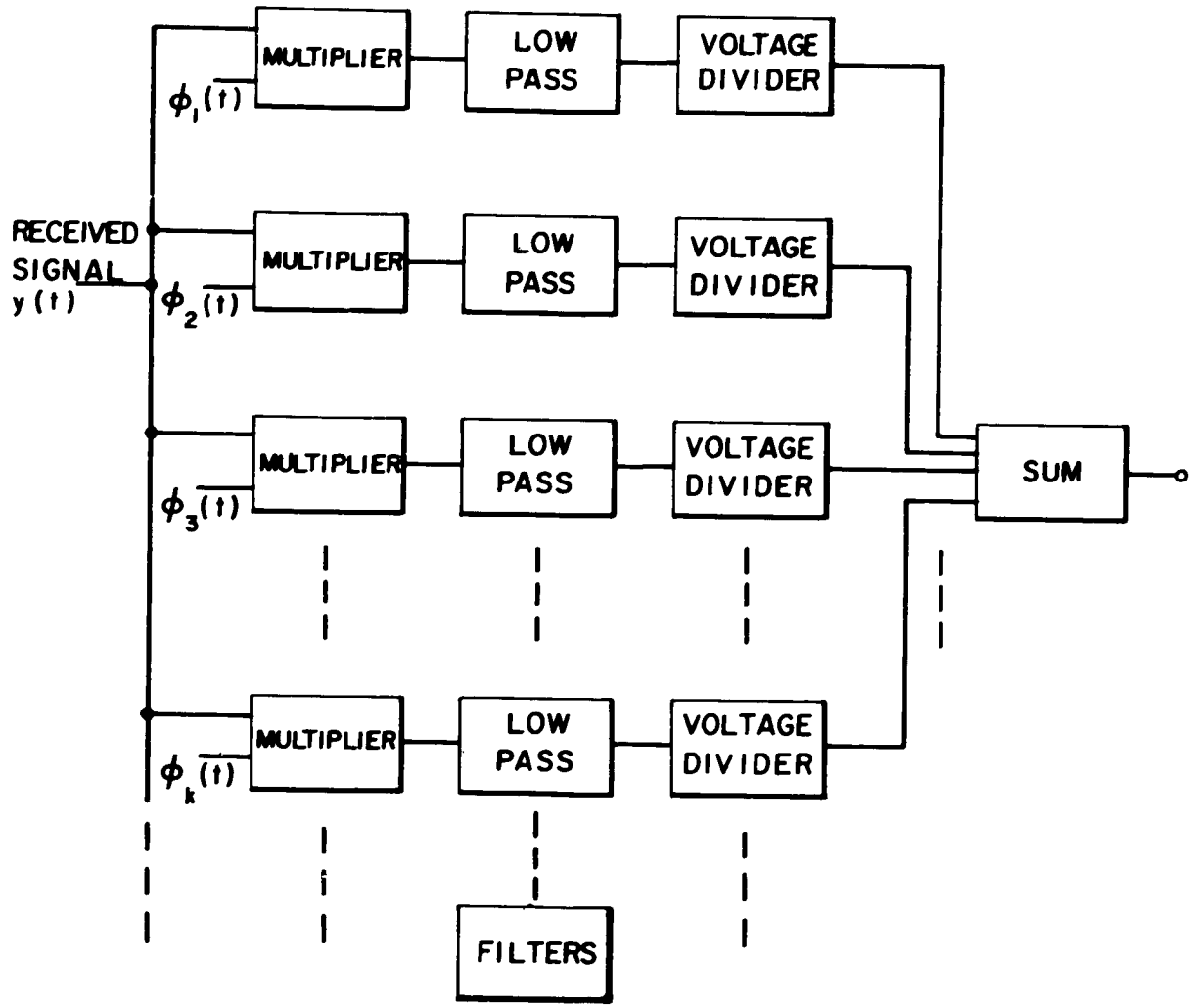

FIG. A-1

ONE DIRECT TECHNIQUE FOR CORRELATING THE RECEIVED SIGNAL

cross-correlation is zero.

$$< \int_0^T n(t)\varphi_j(t)\ dt \int_0^T n(\tau)\varphi_k(\tau)\ d\tau >$$

$$= \int_0^T \int_0^T < n(t)n(\tau) > \ \varphi_j(t)\varphi_k(\tau)\ dtd\tau$$

$$= \int_0^T \int_0^T R(t-\tau)\varphi_j(t)\varphi_k(\tau)\ dtd\tau$$

$$= \int_0^T \varphi_j(t)\ dt \int_0^T R(t-\tau)\varphi_k(\tau)\ d\tau$$

$$= \sigma_k^2 \int_0^T \varphi_j(t)\varphi_k(t)\ dt$$

$$= 0$$

To gain further insight into the problem of detecting signals in colored noise, consider the problem independently of the previous analysis. In the previous approach the likelihood ratio was based on the values attained by the received signal $y(t)$ at intervals t_Δ apart. The fact that the noise was correlated led

to difficulties because the noise at these sampled times were not independent.

One useful suggestion is to find a set of observable coordinates y_k that are uncorrelated but can be generated from the received signal $y(t)$ by linear operations. This corresponds to the general type of receiver shown in Figure A-2. To determine the linear circuits, note that we desire to have

$$y(t) = \sum_k y_k \Phi_k(t)$$

in which, for convenience, the set $\Phi_k(t)$ is orthonormal with respect to the interval $0 \leq t \leq T$. This permits the coordinates (or coefficients) y_k to be computed from

$$y_k = \int_0^T \Phi_k(t) y(t)\, dt$$

The functions $\{\Phi_k(t)\}$, however, have exactly the same properties as the orthogonal set $\{\varphi_k(t)\}$,

$$\Phi_k(t) = \varphi_k(t)$$

This approach thus leads to the same result as that based on directly observing the received signal. Note that the linear circuits of the optimum receiver can be matched filters in which

the impulsive responses are matched to $\{f_i(t)\}$. This is analogous to the case in which the noise is white and the filters are matched to $\{s_i(t)\}$. The circuit shown in Figure A-1 is simply one way of synthesizing the matched filters.

APPENDIX B

Distances from the Origin of the u-dimensional Subspace to the Hyperplanes of the Uncertainty Region Polytope

Consider the u-dimensional vector Y specified by its u orthogonal projections $(y_1, y_2, \ldots, y_u)$. This vector starts at the origin and terminates on the surface of the hyperplane

$$k_i = (A_{ij}, Y) \tag{B-1}$$

Thus, determination of the distance from the origin to the hyperplane defined by equation (B-1) reduces to minimization of the length of vector Y

$$L(y_1, y_2, \ldots, y_u) = \sqrt{\sum_{k=1}^{u} y_k^2} \tag{B-2}$$

subject to the constraint expressed by

$$\sum_{k=1}^{u} \frac{y_k(a_{ik} - a_{jk})}{\sigma_k^2} = k_i \tag{B-3}$$

Equation (B-3) corresponds to equation (B-1) with the dot product of the two vectors expressed in terms of their orthogonal projections. Using Lagrange's method of multipliers, the minimization of $L(y_1, y_2, \ldots, y_u)$ is desired subject to the condition

$$f(y_1, y_2, \ldots, y_u) = \sum_{k=1}^{u} \frac{y_k(a_{ik} - a_{jk})}{\sigma_k^2} - k_i \tag{B-4}$$

This reduces to the solution of (u+1) equations

$$\begin{aligned}
\frac{\partial L}{\partial y_1} + \lambda_1 \frac{\partial f}{\partial y_1} &= 0 \\
\frac{\partial L}{\partial y_2} + \lambda_1 \frac{\partial f}{\partial y_2} &= 0 \\
\vdots \qquad\qquad & \vdots \\
\frac{\partial L}{\partial y_k} + \lambda_1 \frac{\partial f}{\partial y_k} &= 0 \\
\vdots \qquad\qquad & \vdots \\
\frac{\partial L}{\partial y_u} + \lambda_1 \frac{\partial f}{\partial y_u} &= 0
\end{aligned} \tag{B-5}$$

and $$f(y_1, y_2, \ldots, y_k, \ldots, y_u) = k_1 \tag{B-6}$$

in which the set $\{y_k\}$ is now the set of solutional values and λ_1 is the undetermined multiplier. Consider a typical term, y_k, then

$$\frac{\partial L}{\partial y_k} = \frac{y_k}{\sqrt{\sum_{k=1}^{u} y_k^2}} \tag{B-7}$$

and

$$\frac{\partial f}{\partial y_k} = \frac{a_{ik} - a_{jk}}{\sigma_k^2} \tag{B-8}$$

Using equations (B-5), (B-7), and (B-8), we obtain

$$\frac{y_1}{\sqrt{\sum_{k=1}^{u} y_k^2}} = -\frac{\lambda_1(a_{i1}-a_{j1})}{\sigma_1^2}$$

$$\vdots \qquad\qquad \vdots$$

$$\frac{y_k}{\sqrt{\sum_{k=1}^{u} y_k^2}} = -\frac{\lambda_1(a_{ik}-a_{jk})}{\sigma_k^2} \tag{B-9}$$

$$\vdots \qquad\qquad \vdots$$

$$\frac{y_u}{\sqrt{\sum_{k=1}^{u} y_k^2}} = -\frac{\lambda_1(a_{iu}-a_{ju})}{\sigma_u^2}$$

Multiplying both sides of equations (B-9) by $y_1, y_2, \ldots, y_u, \ldots y_k$, summing both sides it is found that

$$d_{ij} = \sqrt{\sum_{k=1}^{u} y_k^2} = -\lambda_1 k_1 \tag{B-10}$$

Similarly squaring both sides of equations (B-9), summing both sides, we obtain

$$1 = \lambda_1^2 \sum_{k=1}^{u} \frac{(a_{ik}-a_{jk})^2}{\sigma_k^4} \tag{B-11}$$

From equations (B-10) and (B-11) it follows that

$$d_{ij} = \frac{k_1}{\left(\sum_{k=1}^{u} \frac{(a_{ik}-a_{jk})^2}{\sigma_k^4}\right)^{\frac{1}{2}}} \tag{B-12}$$

This result could have been obtained using a geometric method. The distance from the origin to the hyperplane defined by equation (B-3) is the length of the projection of vector Y on the vector A_{ij}. This is true because both vectors terminate on the hyperplane and the vector A_{ij} is normal to the hyperplane. Thus, the distance is

$$d_{ij} = \frac{(A_{ij},Y)}{[(A_{ij},A_{ij})]^{\frac{1}{2}}} \tag{B-13}$$

Using equation (B-3) and the analytic expression for (A_{ij},A_{ij}), equation (B-13) reduces to equation (B-12).

REFERENCES

1. Kurz, L. "A Method of Digital Signalling in the Presence of Additive Gaussian Noise." IRE Trans. on Information Theory, vol. IT-7, no. 4, pp. 216-223 (October 1961).

2. Kurz, L. "An Optimization Procedure for a Single Link Unidirectional Communication System on the Presence of Additive Gaussian Noise and for Detection Independent of Fading." New York University, Third Scientific Report, Contract AF 19(604)-6168 (September 1960).

3. Bloom, F. J., Chang, S. S. L., Harris, B., Hauptschein, A., and Morgan, K. C. "Improvement of Binary Transmission by Null-Zone Reception." Proc. IRE, vol. 45, pp. 963-975 (July 1957).

4. Slepian, D. "A Class of Binary Signalling Alphabets." Bell Sys. Tech. J., vol. 35, pp. 203-234 (January 1956).

5. Chang, S. S. L. "Improvement of Two-Way Communication by Means of Feedback." IRE Convention Record, part 4, pp. 88-105 (March 1961).

6. Harris, B., Hauptschein, A., and Schwartz, L. S. "Optimum Decision-Feedback Systems." IRE Convention Record, part 2, pp. 3-10 (March 1957).

7. Harris, B., Hauptschein, A., Morgan, K. C. and Schwartz, L. S. "Binary Communication Feedback Systems." Communication and Electronics, AIEE Trans., vol. 40, pp. 960-969 (January 1959).

8. Harris, B., and Morgan, D. C. "Binary Symmetric Decision-Feedback Systems." Communication and Electronics, AIEE Trans., vol. 38 (September 1958).

9. Metzner, J. J., and Morgan, K. C. "Reliable Fail-Safe Binary Communication." IRE Wescon Convention Record, part 5, pp. 192-206 (1960).

10. Metzner, J. J., and Morgan, K. C. "Coded Feedback Communication Systems." Communication and Electronics, AIEE Trans., vol. 58, pp. 643-647 (January 1962).

DISTRIBUTION LIST

List A

Code	Organization	Copy No.
AF 5	AFMDC (AFMDC Tech Library-MU-135) Patrick AFB, Fla.	1
AF 18	AUL Maxwell AFB, Ala.	2
AF 32	OAR (RROS, Col. John R. Fowler) Temp D 4th and Independence Ave. Washington 25, D.C.	3
AF 33	AFOSR, OAR (SRTP) Temp D 4th and Independence Ave. Washington 25, D.C.	4
AF 43	ARD (ARAPRD-Dist) Wright-Patterson AFB, Ohio	5
AF 124	RADC (RAALD) Griffiss AFB, New York	6
AF 139	AF Missile Development Center (MDBRT) Holloman AFB, New Mexico	7
AF 314	Hq. OAR (RROMP, Maj. Richard W. Nelson) Washington 25, D.C.	8
Ar 5	Commanding General USASRDL Ft. Monmouth, N.J. Attn: Tech. Doc. Ctr. SIGRA/SL-ADT	9
Ar 9	Department of the Army Office of the Chief Signal Officer Washington 25, D.C. Attn: SIGRD-4a-2	10
Ar 50	Commanding Officer Attn: ORDBG-OLS Diamond Ordnance Fuze Laboratories Washington 25, D.C.	11
Ar 67	Redstone Scientific Information Center U.S. Army Missile Command Redstone Arsenal, Alabama	12
G 2	Defense Documentation Center (DDC) Cameron Station Alexandria, Virginia	13-32
G 31	Office of Scientific Intelligence Central Intelligence Agency 2430 E Street, N.W. Washington 25, D.C.	33

Code	Organization	Copy No.
G 68	Scientific and Technical Information Facility Attn: NASA Representative (S-AK/DL) P.O. Box 5700 Bethesda, Maryland	34
G 109	Director Langley Research Center National Aeronautics and Space Administration Langley Field, Virginia	35
M 6	AFCRL, OAR (CRERA - Stop 39) L.G. Hanscom Field Bedford, Mass.	36-47
M 83	Hq. AFCRL, OAR (CRRPM) L.G. Hanscom Field Bedford, Mass.	48
N 9	Chief, Bureau of Naval Weapons Department of the Navy Washington 25, D.C. Attn: DLI-31	49-50
N 29	Director (Code 2027) U.S. Naval Research Laboratory Washington 25, D.C.	51-52
I 298	Director, USAF Project RAND The Rand Corporation 1700 Main Street Santa Monica, California THRU: AF Liaison Office	53
U 443	Institute of Science and Technology The University of Michigan P.O. Box 618 Ann Arbor, Michigan Attn: IRMIRAC Library	54
AF 253	Technical Information Office European Office, Aerospace Research Shell Building, 47 Cantersteen Brussels, Belgium	55
AF 318	Aero Res. Lab. (ORR) ARRL Lib. AFL 2292, Bldg. 490 Wright-Patterson AFB, Ohio	56
Ar 107	U.S. Army Aviation Human Research Unit U.S. Continental Army Command P.O. Box 428, Fort Rucker, Alabama Attn: Maj. Anne H. Hinnson	57
G 8	Library Boulder Laboratories National Bureau of Standards Boulder, Colorado	58-59

Code	Organization	Copy No.
N 63	Institute of the Aerospace Sciences, Inc. 2 East 64th Street New York 21, New York Attn: Librarian	60
N 84	AFCRL, OAR (CRER, J.R. Marple) L.G. Hanscom Field Bedford, Mass.	61
N 73	Office of Naval Research Branch Office, London Navy 100, Box 39 F.P.O. New York, N.Y.	62-71
U 32	Massachusetts Institute of Technology Research Laboratory Building 26, Room 327 Cambridge 39, Mass. Attn: John H. Hewitt	72
U 431	Alderman Library University of Virginia Charlottesville, Virginia	73
G 9	Defense Research Member Canadian Joint Staff 2450 Massachusetts Ave., N.W. Washington 8, D.C.	74-76

List B-X

Code	Organization	Copy No.
AF 2	ARC (ARAAE-G) Ent AFB, Colo.	77
AF 19	AWS (AWSSS/TITD) Scott AFB, Illinois	78
AF 34	SAC Offutt AFB, Nebr.	79
AF 35	TAC Langley AFB, Va.	80
AF 37	USAF Security Service (SSD) Attn: Directorate of Systems Engineering SSC/Communications-Electronics San Antonio, Texas	81
AF 55	WADD (WCLNE) Wright-Patterson AFB, Ohio	82
AF 76	Air Proving Ground Command SAGE Project Office (Building 6) c/o RAND Corporation P.O. Box 98 Lexington 73, Mass.	83

Code	Organization	Copy No.
AF 179	AFOSR (Dr. Harold Wooster Director Research Information Office Washington 25, D.C.	84
AF 225	RADC (RCRAT) Griffiss AFB, New York	85
AF 332	WADD (WWRCM) Wright-Patterson AFB, Ohio	86
Ar 4	Director Evans Signal Laboratory Belmar, New Jersey Attn: Mr. S. Grossman	87
Ar 30	Chief, U.S. Army Security Agency Arlington Hall Station Arlington 12, Virginia Attn: ACOMS, 04, TL Section	88
Ar 66	Commanding General U.S. Army Electronic Proving Ground Fort Huachuca, Arizona Attn: Technical Library, STEPG-EM	89
Ar 111	USASRDL (SIGRA/SLRAC, Mr. J. Bartow) Ft. Monmouth, New Jersey	90
Ar 121	USASRDL (SIGRA/SL-RAC, Mr. G. Raiano) Ft. Monmouth, New Jersey	91
G 41	Federal Aviation Agency Bureau of Research and Development Washington 25, D.C.	92
G 75	Director National Security Agency Fort George G. Meade, Maryland Attn: C3/REL	93
G 109	Director Langley Research Center National Aeronautics and Space Administration Langley Field, Virginia	94
I 33	ARCON 238 Main Street Cambridge, Mass. Attn: Phillip Ballo	95
I 38	Sigmatron, Inc. Miller Building 394 Marrett Road Lexington 73, Mass. Attn: Dr. Julian Ruseppa	96

Code	Organization	Copy No.
I 51	HRB Singer, Inc. 1517 Science Ave. State College, Pa.	97
I 76	Autonetics 9150 E. Imperial Highway Downey, California Attn: Technical Library, 393-52	98
I 96	Sandia Corporation Sandia Base, P.O. Box 5800 Albuquerque, New Mexico Attn: Classified Document Division	99
I 126	Convair, A Division of General Dynamics Corp. Fort Worth, Texas Attn: K.O. Brown, Division Research Librarian	100
I 130	Parke Mathematical Labs, Inc. Bedford Road, Carlisle, Mass. Attn: Dr. Nathan Grier Parke, III	101
I 190	Motorola, Inc. Phoenix Research Laboratory 3102 No. 56th Street Phoenix, Arizona Attn: Technical Librarian	102
I 194	Rand Corporation 1700 Main Street Santa Monica, California Attn: Dr. A.L. Hiebert	103
I 228	Philco Corporation Research Division, Plant No. 30 4700 Wissahickon Ave. Philadelphia 44, Pa.	104
I 258	General Electric Company Ghalls Research Laboratory 1 River Road, Schenectady, New York Attn: Dr. R.L. Shuey	105
I 266	ITT Federal Laboratories Technical Library 500 Washington Ave. Nutley 10, New Jersey	106
I 291	Radio Corporation of America Defense Electronic Products Building 10, Floor 7 Camden 2, New Jersey Attn: Mr. Harold J. Schrader, Staff Engineer Organization of Chief Technical Administrator	107

Code	Organization	Copy No.
I 312	SSL Technical Library Document Acquisition Space Technology Laboratories, Inc. P.O. Box 95001 Los Angeles 45, California	108
I 375	Hughes Aircraft Company Culver City, California Attn: Dr. H.G. Lutz Communication and Miniaturization Dept.	109
G 108	Office of the US Research and Development Coordinator SHAPE Air Defense Technical Center P.O. Box 174, The Hague, Netherlands Attn: Mr. B. Burrow	110
U 441	Massachusetts Institute of Technology Lincoln Laboratory, P.O. Box 73 Lexington 73, Mass. Attn: Mr. E. Shenman	111
I 445	The Rand Corp. 1700 Main Street Santa Monica, California Attn: Dr. R.E. Kalaba	112
I 561	Malpar, Inc. 11 Galen Street Watertown, Mass. Attn: Librarian	113
I 674	Stanford Research Institute Menlo Park, California Attn: W.R. Vincent	114
I 675	Hazeltine Research Corp. 79-85 Little Neck Parkway Little Neck 62, New York Attn: Donald Richman	115
I 784	Sylvania Electronic Systems Applied Research Laboratory 100 First Avenue Waltham, Mass. Attn: Dr. Seymour Stein	116
I 921	Litton Systems, Inc. 221 Crescent Street Waltham, Mass. Attn: Dr. David Van Meter	117
I 988	The Mitre Corp. Middlesex Turnpike Bedford, Mass.	118

Code	Organization	Copy No.
I 997	Alton T. Butson 2030 109th St., N.E. Bellevue, Washington	119
N 55	RAD (RADC Headquarters of Technology) Applied Research Division L.G. Hanscom Field Bedford, Mass	120
N 37	Office of Naval Research Department of the Navy Washington 25, D.C. Attn: Code 427, Electronics Branch	121
N 57	Chief, Bureau of Ships Department of the Navy Washington 25, D.C. Attn: Mr. B. Hand, Code 823	122
N 59	U.S. Naval Air Development Center Johnsville, Pennsylvania Attn: Librarian	123
N 85	Commanding Officer and Director U.S. Navy Electronics Laboratory (Library) San Diego 52, California	124
U 26	Massachusetts Institute of Technology Lincoln Laboratory P.O. Box 73 Lexington 73, Mass. Attn: Mary A. Grenese, Librarian	125
U 37	University of Michigan Engineering Research Institute Willow Run Laboratories Willow Run Airport Ypsilanti, Michigan Attn: Librarian	126
U 41	Northeastern University Electronics Research Laboratory Boston, Mass. Attn: M.W. Emsigman	127
U 60	New York University College of Engineering Department of Electrical Engineering University Heights New York 53, New York Attn: Dr. Robert F. Cotellessa	128
U 144	Jet Propulsion Laboratory California Institute of Technology 4800 Oak Grove Drive Pasadena 3, California Attn: Dr. Eberhardt Rechtin	129

Code	Organization	Copy No.
	M.R. Mitchell L.B. Randolph Military Comm. Dept. General Electric Company 4000 N.W. 39th Street Oklahoma City, Oklahoma	130 131
U 157	California Institute of Technology Jet Propulsion Laboratory 4800 Oak Grove Drive Pasadena 3, California Attn: Mr. I.E. Newlan, Manager Technical Reports Section	132
U 286	University of Michigan Office of Research Administration North Campus, Ann Arbor, Michigan Attn: Gordon Roberts	133
U 397	Polytechnic Institute of Brooklyn 333 Jay Street Brooklyn, New York Attn: Professor Edward Joseph Smith	134
U 396	Syracuse University Syracuse 10, New York Attn: Professor F. Ream	135
U 406	Massachusetts Institute of Technology Department of Electrical Engineering Cambridge, Mass. Attn: Mr. Jack Cowan	136
U 408	Johns Hopkins University School of Engineering 34th and Charles Baltimore 18, Maryland Attn: W.H. Higgins	137
U 411	Montana State College Electronics Research Laboratory Bozeman, Montana Attn: Dr. W. Kilmer	138
U 395	Advanced Electronics Center at Cornell University General Electric Company Ithaca, New York Attn: Dr. Robert Turner	139
	Hq. AFCRL, Office of Aerospace Research (CRW) L.G. Hanscom Field, Bedford, Mass.	140
	Hq. AFCRL, Office of Aerospace Research (CRW) L.G. Hanscom Field, Bedford, Mass.	141-150

Air Force Cambridge Research Laboratories, Office of Aerospace Research, United States Air Force, Bedford, Massachusetts.

Rpt Nr AFCRL- RELIABILITY IMPROVEMENT OF DIGITAL COMMUNICATION USING REDUNDANCY IN UNCERTAINTY REGION RECEPTION. Thirteenth Scientific report, June 63, 78 + viii pp. incl illus., 10 refs.

Unclassified Report

This report considers an efficient method for utilizing the redundancy of the transmittible language to improve the reliability of a digital communication system disturbed by additive non-white gaussian noise. Namely, the reliability of digital systems using orthogonal and binary digit codes is improved by introducing an uncertainty region at the receiver. This method is an extension and generalization of null-zone reception previously applied to the improvement of binary transmission in the presence of white gaussian or peak-limited noise. It is shown that, by permitting a small percentage of nulls to be printed, considerable improvement in reliability is achieved. In addition, it is shown that communication links using orthogonal digit coding afford greater reliability than corresponding links using binary digit coding. Performance results are given for several different codes for the case in which the demodulated gaussian noise power density spectrum increases with increasing frequency. Such a noise power density spectrum acts as a weighting function which confines the generated signals to the available band of frequencies. A geometric interpretation of the results is given in terms of n-dimensional Euclidean space. Applications to feedback systems will be discussed in a future report.

1. Computers
2. Communication Systems
3. Coding

I. Project 4610, Task 461003
II. Contract AF19(604)-6168
III. New York University, College of Engineering, Department of Electrical Engineering, Laboratory for Electroscience Research, University Heights, New York 53, New York
IV. Kurz, L.
V. Technical Report 400-77
VI. Aval fr OTS
VII. In ASTIA collection

Air Force Cambridge Research Laboratories, Office of Aerospace Research, United States Air Force, Bedford, Massachusetts.

Rpt Nr AFCRL- RELIABILITY IMPROVEMENT OF DIGITAL COMMUNICATION USING REDUNDANCY IN UNCERTAINTY REGION RECEPTION. Thirteenth Scientific report, June 63, 78 + viii pp. incl illus., 10 refs.

Unclassified Report

This report considers an efficient method for utilizing the redundancy of the transmittible language to improve the reliability of a digital communication system disturbed by additive non-white gaussian noise. Namely, the reliability of digital systems using orthogonal and binary digit codes is improved by introducing an uncertainty region at the receiver. This method is an extension and generalization of null-zone reception previously applied to the improvement of binary transmission in the presence of white gaussian or peak-limited noise. It is shown that, by permitting a small percentage of nulls to be printed, considerable improvement in reliability is achieved. In addition, it is shown that communication links using orthogonal digit coding afford greater reliability than corresponding links using binary digit coding. Performance results are given for several different codes for the case in which the demodulated gaussian noise power density spectrum increases with increasing frequency. Such a noise power density spectrum acts as a weighting function which confines the generated signals to the available band of frequencies. A geometric interpretation of the results is given in terms of n-dimensional Euclidean space. Applications to feedback systems will be discussed in a future report.

1. Computers
2. Communication Systems
3. Coding

I. Project 4610, Task 461003
II. Contract AF19(604)-6168
III. New York University, College of Engineering, Department of Electrical Engineering, Laboratory for Electroscience Research, University Heights, New York 53, New York
IV. Kurz, L.
V. Technical Report 400-77
VI. Aval fr OTS
VII. In ASTIA collection

Air Force Cambridge Research Laboratories, Office of Aerospace Research, United States Air Force, Bedford, Massachusetts.

Rpt Nr AFCRL- RELIABILITY IMPROVEMENT OF DIGITAL COMMUNICATION USING REDUNDANCY IN UNCERTAINTY REGION RECEPTION. Thirteenth Scientific report, June 63, 78 + viii pp. incl illus., 10 refs.

Unclassified Report

This report considers an efficient method for utilizing the redundancy of the transmittible language to improve the reliability of a digital communication system disturbed by additive non-white gaussian noise. Namely, the reliability of digital systems using orthogonal and binary digit codes is improved by introducing an uncertainty region at the receiver. This method is an extension and generalization of null-zone reception previously applied to the improvement of binary transmission in the presence of white gaussian or peak-limited noise. It is shown that, by permitting a small percentage of nulls to be printed, considerable improvement in reliability is achieved. In addition, it is shown that communication links using orthogonal digit coding afford greater reliability than corresponding links using binary digit coding. Performance results are given for several different codes for the case in which the demodulated gaussian noise power density spectrum increases with increasing frequency. Such a noise power density spectrum acts as a weighting function which confines the generated signals to the available band of frequencies. A geometric interpretation of the results is given in terms of n-dimensional Euclidean space. Applications to feedback systems will be discussed in a future report.

1. Computers
2. Communication Systems
3. Coding

I. Project 4610, Task 461003
II. Contract AF19(604)-6168
III. New York University, College of Engineering, Department of Electrical Engineering, Laboratory for Electroscience Research, University Heights, New York 53, New York
IV. Kurz, L.
V. Technical Report 400-77

VI. Aval fr OTS
VII. In ASTIA collection

Air Force Cambridge Research Laboratories, Office of Aerospace Research, United States Air Force, Bedford, Massachusetts.

Rpt Nr AFCRL- RELIABILITY IMPROVEMENT OF DIGITAL COMMUNICATION USING REDUNDANCY IN UNCERTAINTY REGION RECEPTION. Thirteenth Scientific report, June 63, 78 + viii pp. incl illus., 10 refs.

Unclassified Report

This report considers an efficient method for utilizing the redundancy of the transmittible language to improve the reliability of a digital communication system disturbed by additive non-white gaussian noise. Namely, the reliability of digital systems using orthogonal and binary digit codes is improved by introducing an uncertainty region at the receiver. This method is an extension and generalization of null-zone reception previously applied to the improvement of binary transmission in the presence of white gaussian or peak-limited noise. It is shown that, by permitting a small percentage of nulls to be printed, considerable improvement in reliability is achieved. In addition, it is shown that communication links using orthogonal digit coding afford greater reliability than corresponding links using binary digit coding. Performance results are given for several different codes for the case in which the demodulated gaussian noise power density spectrum increases with increasing frequency. Such a noise power density spectrum acts as a weighting function which confines the generated signals to the available band of frequencies. A geometric interpretation of the results is given in terms of n-dimensional Euclidean space. Applications to feedback systems will be discussed in a future report.

1. Computers
2. Communication Systems
3. Coding

I. Project 4610, Task 461003
II. Contract AF19(604)-6168
III. New York University, College of Engineering, Department of Electrical Engineering, Laboratory for Electroscience Research, University Heights, New York 53, New York
IV. Kurz, L.
V. Technical Report 400-77

VI. Aval fr OTS
VII. In ASTIA collection

Air Force Cambridge Research Laboratories, Office of Aerospace Research, United States Air Force, Bedford, Massachusetts.

Rpt Nr AFCRL- RELIABILITY IMPROVEMENT OF DIGITAL COMMUNICATION USING REDUNDANCY IN UNCERTAINTY REGION RECEPTION. Thirteenth Scientific report, June 63, 78 + viii pp. incl illus., 10 refs.

Unclassified Report

This report considers an efficient method for utilizing the redundancy of the transmittible language to improve the reliability of a digital communication system disturbed by additive non-white gaussian noise. Namely, the reliability of digital systems using orthogonal and binary digit codes is improved by introducing an uncertainty region at the receiver. This method is an extension and generalization of null-zone reception previously applied to the improvement of binary transmission in the presence of white gaussian or peak-limited noise. It is shown that, by permitting a small percentage of nulls to be printed, considerable improvement in reliability is achieved. In addition, it is shown that communication links using orthogonal digit coding afford greater reliability than corresponding links using binary digit coding. Performance results are given for several different codes for the case in which the demodulated gaussian noise power density spectrum increases with increasing frequency. Such a noise power density spectrum acts as a weighting function which confines the generated signals to the available band of frequencies. A geometric interpretation of the results is given in terms of n-dimensional Euclidean space. Applications to feedback systems will be discussed in a future report.

1. Computers
2. Communication Systems
3. Coding

I. Project 4610, Task 461003
II. Contract AF19(604)-6168
III. New York University, College of Engineering, Department of Electrical Engineering, Laboratory for Electroscience Research, University Heights, New York 53, New York
IV. Kurz, L.
V. Technical Report 400-77
VI. Aval fr OTS
VII. In ASTIA collection

Air Force Cambridge Research Laboratories, Office of Aerospace Research, United States Air Force, Bedford, Massachusetts.

Rpt Nr AFCRL- RELIABILITY IMPROVEMENT OF DIGITAL COMMUNICATION USING REDUNDANCY IN UNCERTAINTY REGION RECEPTION. Thirteenth Scientific report, June 63, 78 + viii pp. incl illus., 10 refs.

Unclassified Report

This report considers an efficient method for utilizing the redundancy of the transmittible language to improve the reliability of a digital communication system disturbed by additive non-white gaussian noise. Namely, the reliability of digital systems using orthogonal and binary digit codes is improved by introducing an uncertainty region at the receiver. This method is an extension and generalization of null-zone reception previously applied to the improvement of binary transmission in the presence of white gaussian or peak-limited noise. It is shown that, by permitting a small percentage of nulls to be printed, considerable improvement in reliability is achieved. In addition, it is shown that communication links using orthogonal digit coding afford greater reliability than corresponding links using binary digit coding. Performance results are given for several different codes for the case in which the demodulated gaussian noise power density spectrum increases with increasing frequency. Such a noise power density spectrum acts as a weighting function which confines the generated signals to the available band of frequencies. A geometric interpretation of the results is given in terms of n-dimensional Euclidean space. Applications to feedback systems will be discussed in a future report.

1. Computers
2. Communication Systems
3. Coding

I. Project 4610, Task 461003
II. Contract AF19(604)-6168
III. New York University, College of Engineering, Department of Electrical Engineering, Laboratory for Electroscience Research, University Heights, New York 53, New York
IV. Kurz, L.
V. Technical Report 400-77
VI. Aval fr OTS
VII. In ASTIA collection

Air Force Cambridge Research Laboratories, Office of Aerospace Research, United States Air Force, Bedford, Massachusetts.

Rpt Nr AFCRL- RELIABILITY IMPROVEMENT OF DIGITAL COMMUNICATION USING REDUNDANCY IN UNCERTAINTY REGION RECEPTION. Thirteenth Scientific report, June 63, 78 + viii pp. incl illus., 10 refs.

Unclassified Report

This report considers an efficient method for utilizing the redundancy of the transmittible language to improve the reliability of a digital communication system disturbed by additive non-white gaussian noise. Namely, the reliability of digital systems using orthogonal and binary digit codes is improved by introducing an uncertainty region at the receiver. This method is an extension and generalization of null-zone reception previously applied to the improvement of binary transmission in the presence of white gaussian or peak-limited noise. It is shown that, by permitting a small percentage of nulls to be printed, considerable improvement in reliability is achieved. In addition, it is shown that communication links using orthogonal digit coding afford greater reliability than corresponding links using binary digit coding. Performance results are given for several different codes for the case in which the demodulated gaussian noise power density spectrum increases with increasing frequency. Such a noise power density spectrum acts as a weighting function which confines the generated signals to the available band of frequencies. A geometric interpretation of the results is given in terms of n-dimensional Euclidean space. Applications to feedback systems will be discussed in a future report.

1. Computers
2. Communication Systems
3. Coding

I. Project 4610, Task 461003
II. Contract AF19(604)-6168
III. New York University, College of Engineering, Department of Electrical Engineering, Laboratory for Electroscience Research, University Heights, New York 53, New York
IV. Kurz, L.
V. Technical Report 400-77
VI. Aval fr OTS
VII. In ASTIA collection

Air Force Cambridge Research Laboratories, Office of Aerospace Research, United States Air Force, Bedford, Massachusetts.

Rpt Nr AFCRL- RELIABILITY IMPROVEMENT OF DIGITAL COMMUNICATION USING REDUNDANCY IN UNCERTAINTY REGION RECEPTION. Thirteenth Scientific report, June 63, 78 + viii pp. incl illus., 10 refs.

Unclassified Report

This report considers an efficient method for utilizing the redundancy of the transmittible language to improve the reliability of a digital communication system disturbed by additive non-white gaussian noise. Namely, the reliability of digital systems using orthogonal and binary digit codes is improved by introducing an uncertainty region at the receiver. This method is an extension and generalization of null-zone reception previously applied to the improvement of binary transmission in the presence of white gaussian or peak-limited noise. It is shown that, by permitting a small percentage of nulls to be printed, considerable improvement in reliability is achieved. In addition, it is shown that communication links using orthogonal digit coding afford greater reliability than corresponding links using binary digit coding. Performance results are given for several different codes for the case in which the demodulated gaussian noise power density spectrum increases with increasing frequency. Such a noise power density spectrum acts as a weighting function which confines the generated signals to the available band of frequencies. A geometric interpretation of the results is given in terms of n-dimensional Euclidean space. Applications to feedback systems will be discussed in a future report.

1. Computers
2. Communication Systems
3. Coding

I. Project 4610, Task 461003
II. Contract AF19(604)-6168
III. New York University, College of Engineering, Department of Electrical Engineering, Laboratory for Electroscience Research, University Heights, New York 53, New York
IV. Kurz, L.
V. Technical Report 400-77
VI. Aval fr OTS
VII. In ASTIA collection

The Research Division of the College of Engineering is an integral part of the educational program of the College. The faculty of the College takes part in the work of the Research Division, often serving as co-ordinators or project directors or as technical specialists on the projects. This research activity enriches the educational experience of their students since it enables the faculty to be practicing scientists and engineers, in close touch with developments and current problems in their field of specialization. At the same time, this arrangement makes available to industrial and governmental sponsors the wealth of experience and special training represented by the faculty of a major engineering college. The staff of the Division is drawn from many areas of engineering and research. It includes men formerly with the research divisions of industry, governmental and public agencies, and independent research organizations.

Following are the areas represented in the research program: Aeronautical Engineering, Chemical Engineering, Civil Engineering, Electrical Engineering, Engineering Mechanics, Industrial and Management Engineering, Mechanical Engineering, Metallurgical Engineering, Mathematics, Meteorology and Oceanography, and Physics. In addition, an interdisciplinary research group is responsible for studies which embrace several disciplines. Inquiries regarding specific areas of research may be addressed to the Director, Research Division for forwarding to the appropriate research group.