63-3-3

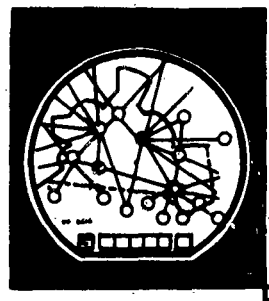

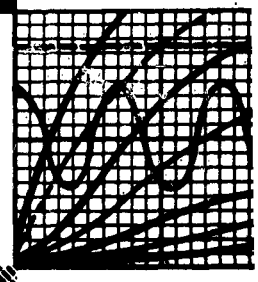

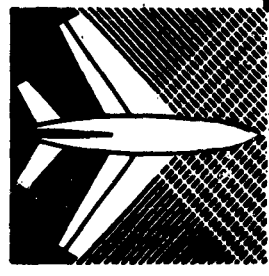

CATALOGED BY ASTIA
AS AD No. 403484

FINAL REPORT

Project No. 104-602T

Sub-Task 3

COMPUTER PROGRAMMING OF PHASE I MASTER PROGRAM (VOLUME III)

403 484

ASTIA
MAY 8 1963
TISIA

JUNE 1962

FEDERAL AVIATION AGENCY
Systems Research & Development Service
EXPERIMENTATION DIVISION
Atlantic City, New Jersey

FINAL REPORT
COMPUTER PROGRAMMING
OF PHASE I MASTER PROGRAM

(VOLUME III)

PROJECT NO. 104-602T
Sub-Task 3
Work Detail C

Prepared by:

Don W. Vogel
Kenneth W. House
William Brown
Raymond J. Hilton
Robert B. Stein

June 1962

This report has been approved for general distribution.

Joseph D. Blatt
Director, Systems Research
and Development Service
Federal Aviation Agency

Experimentation Division
National Aviation Facilities Experimental Center
Atlantic City, New Jersey

This report has been released to the U. S. Department of Commerce, Business and Defense Services Administration, Office of Technical Services, Washington 25, D. C. for reproduction and sale to the general public.

FINAL REPORT
COMPUTER PROGRAMMING
OF PHASE I MASTER PROGRAM

(VOLUME III)

PROJECT NO. 104-602T
Sub-Task 3
Work Detail C

Prepared by:

Don W. Vogel
Kenneth W. House
William Brown
Raymond J. Hilton
Robert B. Stein

June 1962

This report has been approved for general distribution.

Joseph D. Blatt
Director, Systems Research
and Development Service
Federal Aviation Agency

Experimentation Division
National Aviation Facilities Experimental Center
Atlantic City, New Jersey

This report has been released to the U. S. Department of Commerce, Business and Defense Services Administration, Office of Technical Services, Washington 25, D. C. for reproduction and sale to the general public.

FINAL REPORT
COMPUTER PROGRAMMING
OF PHASE I MASTER PROGRAM

VOLUME III

APPENDIX X
THROUGH
APPENDIX XXI

APPENDIX X

TYPEWRITER PRINTOUT ROUTINE

1

WORD	Ø												1												2												3											
CHARACTER	11	10	9	8	7	6	5	4	3	2	1	S	11	10	9	8	7	6	5	4	3	2	1	S	11	10	9	8	7	6	5	4	3	2	1	S	11	10	9	8	7	6	5	4				
TRACK 96	D	P	T	R	!	S.	T.	A.	W.	Y	Δ	1	J	C	T	2	N	D	A	W	Y	Δ	2	J	←																							
TRACK 94	-	J	C	T	.	.	.	.	.	.	Δ	1	J	C	T	2	N	D	A	W	Y	Δ	2	J	C	T	3	R	D	A	W	Y	Δ	3	J	C	T	4	T	H	A	W	Y	Δ				
TRACK 97	D	P	T	R	Δ	F	L	T.	I	D	N	T	1	S	T	W	O	R	D	-	R	M	K	S	2	N	D	W	O	R	D	-	R	M	K	S	-	-	-	-	THIS FIX TBL							
FIELD	U						T									S					R				Q												P											

WORD	Ø												1												2												3											
CHARACTER	11	10	9	8	7	6	5	4	3	2	1	S	11	10	9	8	7	6	5	4	3	2	1	S	11	10	9	8	7	6	5	4	3	2	1	S	11	10	9	8	7	6	5	4	3			
FORMAT CONSTANTS	t	?	i	i	i	i	i	i	i	i	t	t	i	i	t	i	i	i	i	t	i	i	i	i	t	i	i	i	i	i														i	i				
DATA ADDED TO FORMAT		i	PREVIOUS FIX PREVIOUS FIX					PREVIOUS FIX TIME					THIS FIX TIME MINS.			HIGH ORDER 4 CHARACTERS OF THIS FIX						A	L	T	D			D	P	T	R	Δ	1	S	T	A	W	Y	Δ	1	J	C	T	Δ i	2 i	N i			
FIELD	V		U								T					S					R				Q			P								N												

WORD	Ø												1												2												3											
CHARACTER	11	10	9	8	7	6	5	4	3	2	1	S	11	10	9	8	7	6	5	4	3	2	1	S	11	10	9	8	7	6	5	4	3	2	1	S	11	10	9	8	7	6	5	4	3			
FORMAT CONSTANTS	t	?																								r	t	t	t	t	t	t	i	i	i	i												
DATA ADDED TO FORMAT		i	4	J	C	T	Δ	5	T	H	A	W	Y	Δ	5	J	C	T	Δ	6	T	H	A	W	Y								6	J	C	T	Δ	7	T	H	A	W	Y	Δ	D C 14			
FIELD	V		U				T									S									R								Q						P									

CODE	TYPEWRITER FUNCTION	CODE	TYPEWRITER FUNCTION
t	TABULATE	r	CARRIAGE RETURN
j,	BLACK COLOR PRINT	Δ	SPACE
?	RED COLOR PRINT	£	TRACK SWITCH AND CLEAR
/	UPPER CASE	I	TERMINATE PRINT AND CLEAR
β	LOWER CASE	i (ignore) or . (dot)	NON-PRINT PAD CHARACTERS

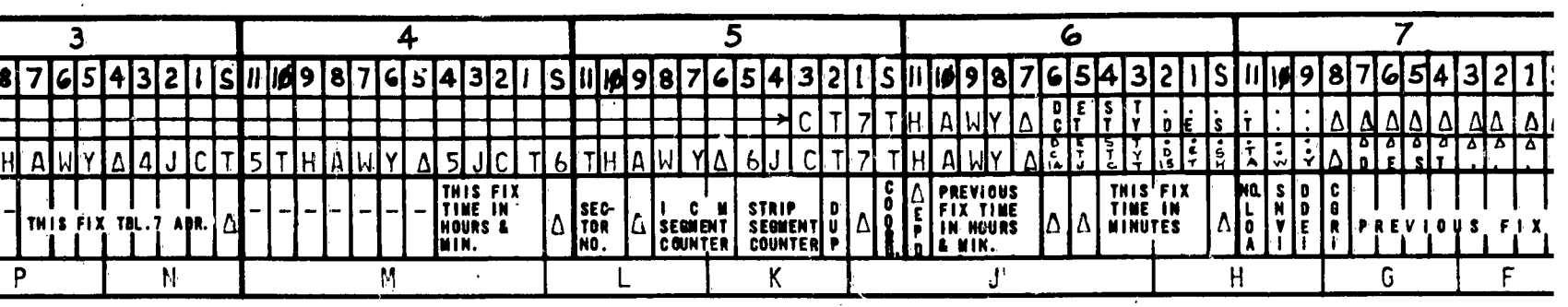

PRINT-OUT FORMAT
GENERAL STORAGE BUFFER

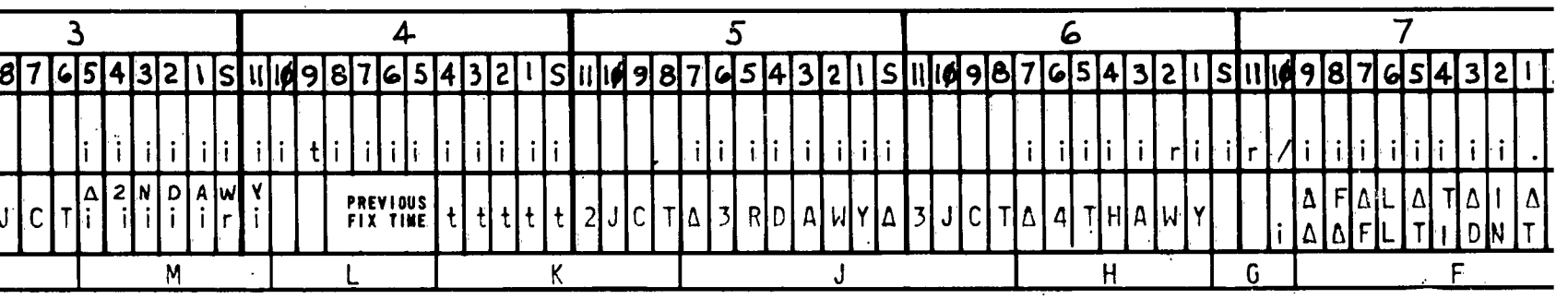

PRINT-OUT FORMAT
BLOCK TRANSFER BUFFER

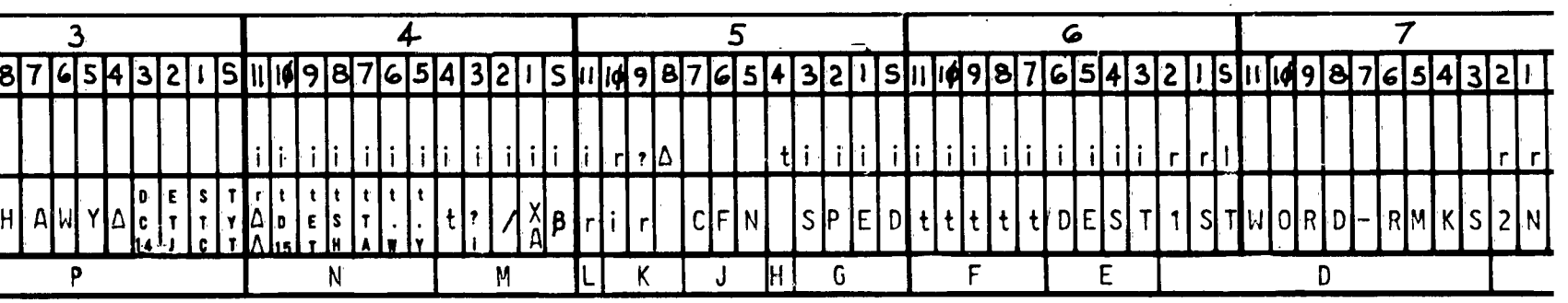

NOTE: REFERENCE MUST BE MADE TO THE FLOW CHARTS TO DETERMINE WHICH OR HOW MUCH OF THE DATA SHOWN IS ACTUALLY ADDED TO THE FORMAT FOR A PARTICULAR STRIP.

NOTE: BLANK AREAS IN THE FORMAT CONSTANTS PRESENTLY CONTAIN i's, BUT THEY ARE ALWAYS OVERWRITTEN WITH DATA AND MAY CONTAIN ANYTHING DESIRED.

EAR
CLEAR
CTERS

2

5						6										7										8										9									
5	4	3	2	1	S	11	10	9	8	7	6	5	4	3	2	1	S	11	10	9	8	7	6	5	4	3	2	1	S	11	10	9	8	7	6	5	4	3	2	1	S	11	10	9	8	7	6	5	4	3	2	1	S
→		C	T	7	T	H	A	W	Y	Δ	DC	ET	ST	TY	DE	ES	S	T	:	:	Δ	Δ	Δ	Δ	Δ	Δ	Δ	Δ	Δ	Δ	START TBL. 7 ADR. CONT. TBL. ADR.							Δ	T	Y	P	E	R	M	K	S	Δ	L	T	D	S	P	E	D
6	J	C	T	7	T	H	A	W	Y	Δ	DC	ET	ST	TY	DE	ES	S	T	:	:	Δ	Δ	Δ	Δ	Δ	Δ	Δ	Δ	Δ	Δ	Δ	Δ	Δ	Δ	Δ	Δ	Δ	Δ	Δ	Δ	Δ	Δ	Δ	Δ	Δ	Δ	Δ	Δ	Δ	Δ	Δ	Δ	Δ	Δ
STRIP SEGMENT COUNTER		DUP	Δ		CODE	Δ	PREVIOUS FIX TIME IN HOURS & MIN.				Δ	Δ	THIS FIX TIME IN MINUTES					Δ	NO. LOA	SNYI	DDEI	CGRI	PREVIOUS FIX								NEXT FIX TBL.7 ADR. COORD.FIX TBL.7 ADR							Δ	DISTANCE FACTOR				COLOR	C	F	N	Δ	T	H	I	S	-	F	I	X
K						J'												H												G												F											

	E																																																				
R																																																						

5						6										7										8										9									
5	4	3	2	1	S	11	10	9	8	7	6	5	4	3	2	1	S	11	10	9	8	7	6	5	4	3	2	1	S	11	10	9	8	7	6	5	4	3	2	1	S	11	10	9	8	7	6	5	4	3	2	1	S
i	i	i	i	i	i					i	i	i	i	i	r	i	i	r	/	i	i	i	i	i	i	i	i	.	i	i	i	β	t	i	i	i	i	t	/		i	i	t	t	β	i	i	i	i	t	ε			
R	D	A	W	Y	Δ	3	J	C	T	Δ	4	T	H	A	W	Y				i	Δ Δ	F Δ F	Δ L L	Δ T T	Δ I I	Δ D D	Δ N N				T	Y	P	E		•	THIS FIX TIME HOURS H Δ R					LOW ORDER 4 CHARACTERS OF THIS FIX										
• J						H										G		F								E								D	C						B										A			

R																																																						

						6										7										8										9									
5	4	3	2	1	S	11	10	9	8	7	6	5	4	3	2	1	S	11	10	9	8	7	6	5	4	3	2	1	S	11	10	9	8	7	6	5	4	3	2	1	S	11	10	9	8	7	6	5	4	3	2	1	S
•	t	i	i	i	i	i	i	i	i	i	i	i	i	i	r	r	l										r	r	l							•		r	r	l	i	i	i	i	i	i	A	i	t	?	/	X	β
N		S	P	E	D	t	t	t	t	t	D	E	S	T	1	S	T	W	O	R	D	-	R	M	K	S	2	N	D	W	O	R	D	-	R	M	K	S															
	H	G				F				E					D											C												B														A	

'O THE FLOW CHARTS TO DETERMINE
. DATA SHOWN IS ACTUALLY ADDED
'ICULAR STRIP.

.T CONSTANTS PRESENTLY CONTAIN i's,
'WRITTEN WITH DATA AND MAY
'.

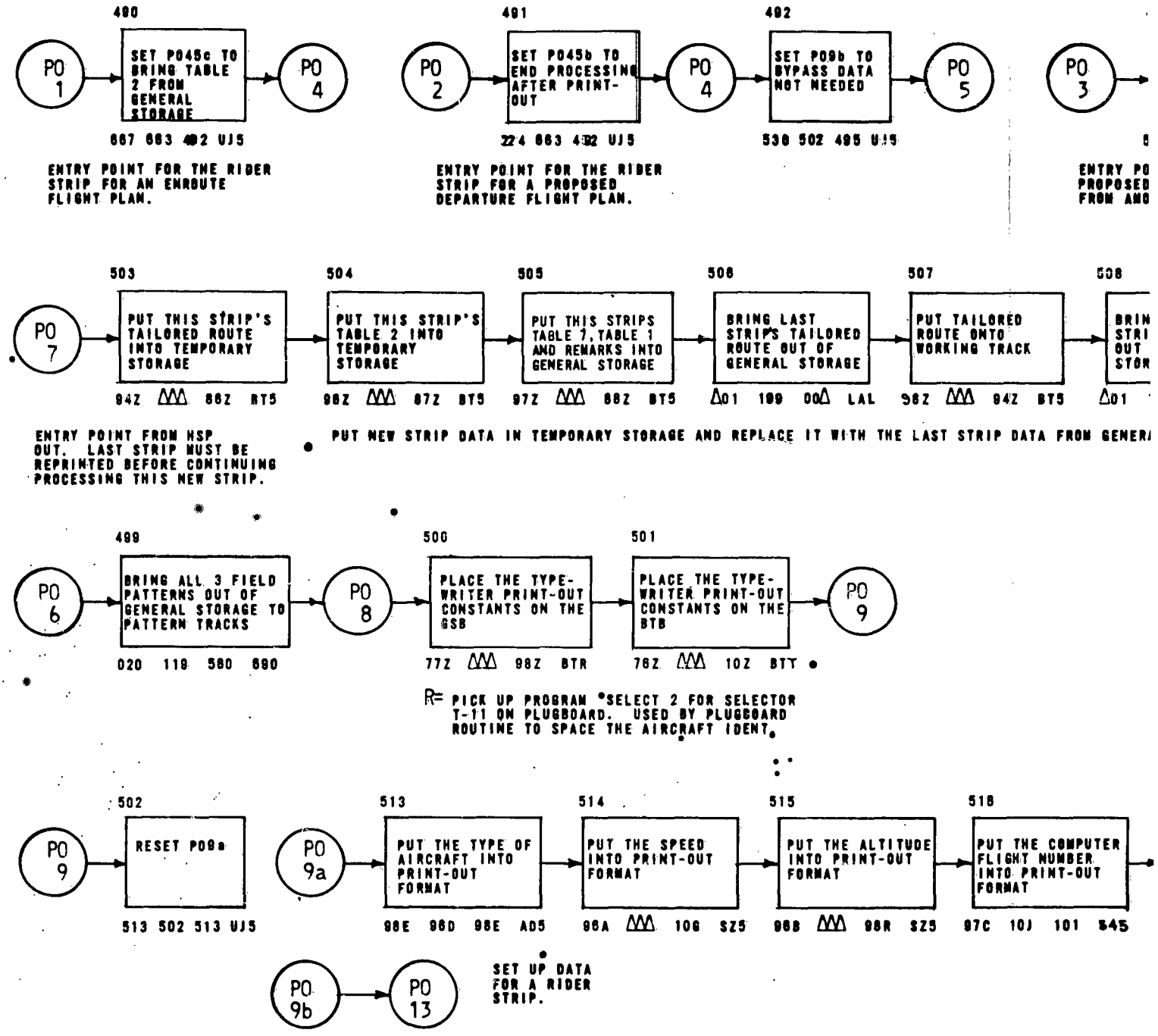
490
PO 1
SET P045c TO BRING TABLE 2 FROM GENERAL STORAGE
PO 4
667 663 402 UJ5
ENTRY POINT FOR THE RIDER STRIP FOR AN ENROUTE FLIGHT PLAN.
491
PO 2
SET P045b TO END PROCESSING AFTER PRINT-OUT
PO 4
224 663 432 UJ5
ENTRY POINT FOR THE RIDER STRIP FOR A PROPOSED DEPARTURE FLIGHT PLAN.
492
SET P09b TO BYPASS DATA NOT NEEDED
PO 5
530 502 495 UJ5
PO 3
ENTRY PO
PROPOSED
FROM AMC
503
PO 7
PUT THIS STRIP'S TAILORED ROUTE INTO TEMPORARY STORAGE
94Z 86Z BT5
504
PUT THIS STRIP'S TABLE 2 INTO TEMPORARY STORAGE
98Z 87Z BT5
505
PUT THIS STRIPS TABLE 7, TABLE 1 AND REMARKS INTO GENERAL STORAGE
97Z 88Z BT5
506
BRING LAST STRIP'S TAILORED ROUTE OUT OF GENERAL STORAGE
Δ01 199 00Δ LAL
507
PUT TAILORED ROUTE ONTO WORKING TRACK
98Z 94Z BT5
508
BRIN
STRI
OUT
STOR
Δ01
ENTRY POINT FROM HSP OUT. LAST STRIP MUST BE REPRINTED BEFORE CONTINUING PROCESSING THIS NEW STRIP.
PUT NEW STRIP DATA IN TEMPORARY STORAGE AND REPLACE IT WITH THE LAST STRIP DATA FROM GENER
499
PO 6
BRING ALL 3 FIELD PATTERNS OUT OF GENERAL STORAGE TO PATTERN TRACKS
020 119 580 690
PO 8
500
PLACE THE TYPE-WRITER PRINT-OUT CONSTANTS ON THE GSB
77Z 98Z BTR
501
PLACE THE TYPE-WRITER PRINT-OUT CONSTANTS ON THE BTB
76Z 10Z BTT
PO 9
R= PICK UP PROGRAM *SELECT 2 FOR SELECTOR T-11 ON PLUGBOARD. USED BY PLUGBOARD ROUTINE TO SPACE THE AIRCRAFT IDENT.
502
PO 9
RESET P09a
513 502 513 UJ5
PO 9a
513
PUT THE TYPE OF AIRCRAFT INTO PRINT-OUT FORMAT
98E 98D 98E AD5
514
PUT THE SPEED INTO PRINT-OUT FORMAT
96A 10G SZ5
515
PUT THE ALTITUDE INTO PRINT-OUT FORMAT
96B 98R SZ5
516
PUT THE COMPUTER FLIGHT NUMBER INTO PRINT-OUT FORMAT
97C 10J 101 545
PO 9b
PO 13
SET UP DATA FOR A RIDER STRIP.

1

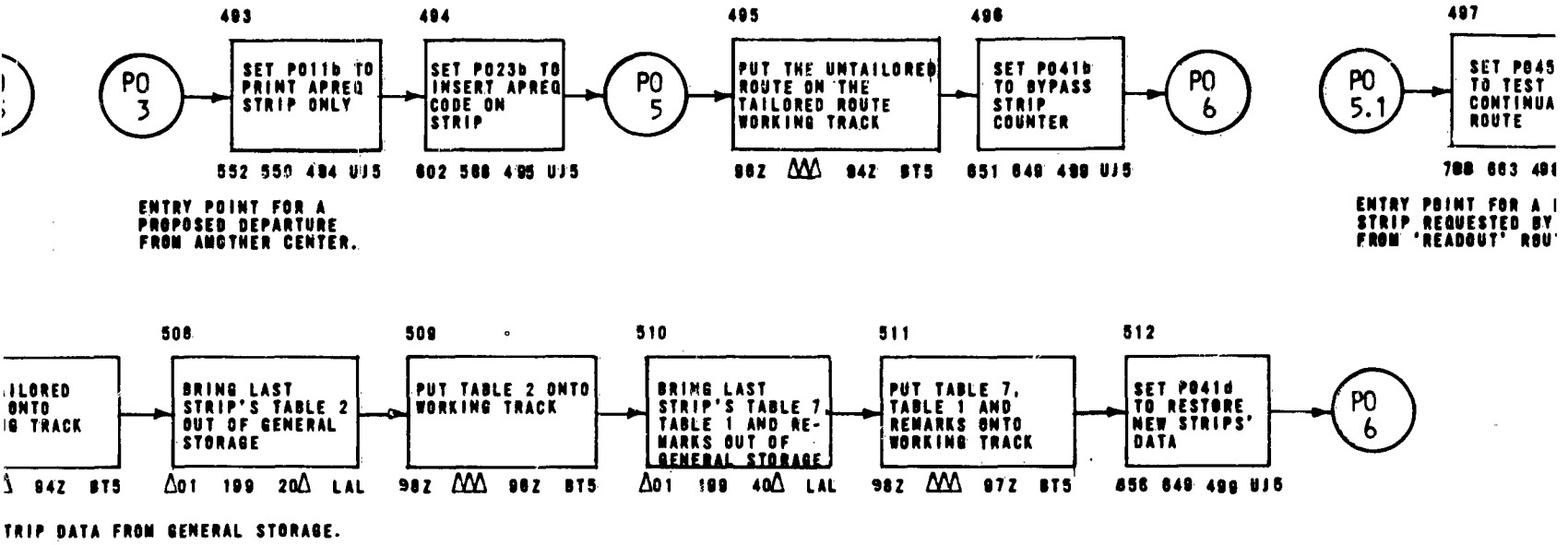
493
494
495
496
497
PO 3
SET P011b TO PRINT APREQ STRIP ONLY
SET P023b TO INSERT APREQ CODE ON STRIP
PO 5
PUT THE UNTAILORED ROUTE ON THE TAILORED ROUTE WORKING TRACK
SET P041b TO BYPASS STRIP COUNTER
PO 6
PO 5.1
SET P045 TO TEST CONTINUA ROUTE
552 550 494 UJ5
602 588 495 UJ5
98Z 94Z BT5
651 649 496 UJ5
ENTRY POINT FOR A PROPOSED DEPARTURE FROM ANOTHER CENTER.
ENTRY POINT FOR A STRIP REQUESTED BY FROM 'READOUT' ROU
508
509
510
511
512
ILORED ONTO G TRACK
BRING LAST STRIP'S TABLE 2 OUT OF GENERAL STORAGE
PUT TABLE 2 ONTO WORKING TRACK
BRING LAST STRIP'S TABLE 7, TABLE 1 AND REMARKS OUT OF GENERAL STORAGE
PUT TABLE 7, TABLE 1 AND REMARKS ONTO WORKING TRACK
SET P041d TO RESTORE NEW STRIPS' DATA
PO 6
94Z BT5
Δ01 199 20Δ LAL
98Z 98Z BT5
Δ01 199 40Δ LAL
98Z 97Z BT5
656 649 499 UJ5
TRIP DATA FROM GENERAL STORAGE.

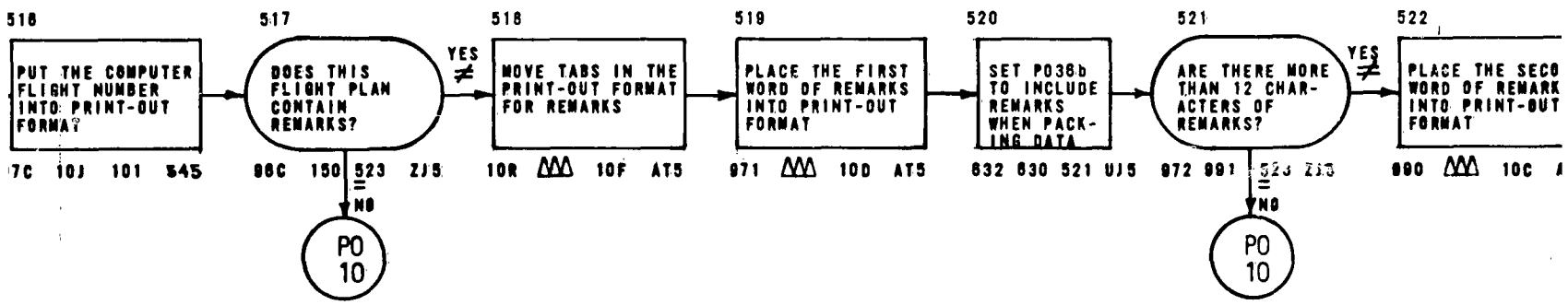
516
517
518
519
520
521
522
PUT THE COMPUTER FLIGHT NUMBER INTO PRINT-OUT FORMAT
DOES THIS FLIGHT PLAN CONTAIN REMARKS?
YES
MOVE TABS IN THE PRINT-OUT FORMAT FOR REMARKS
PLACE THE FIRST WORD OF REMARKS INTO PRINT-OUT FORMAT
SET P036b TO INCLUDE REMARKS WHEN PACK-ING DATA
ARE THERE MORE THAN 12 CHAR-ACTERS OF REMARKS?
YES
PLACE THE SECO WORD OF REMARK INTO PRINT-OUT FORMAT
7C 10J 101 545
86C 150 523 ZJ5
NO
PO 10
10R 10F AT5
971 10D AT5
632 630 521 UJ5
972 991 523 ZJ5
NO
PO 10
890 10C

2

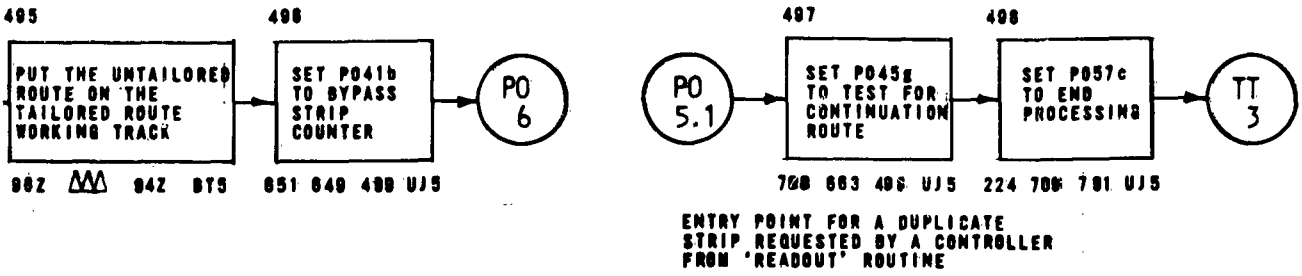
495
PUT THE UNTAILORED ROUTE ON THE TAILORED ROUTE WORKING TRACK
98Z 94Z BT5
496
SET P041b TO BYPASS STRIP COUNTER
651 649 499 UJ5
PO 6
PO 5.1
497
SET P045g TO TEST FOR CONTINUATION ROUTE
708 663 496 UJ5
498
SET P057c TO END PROCESSING
224 706 781 UJ5
TT 3
ENTRY POINT FOR A DUPLICATE STRIP REQUESTED BY A CONTROLLER FROM 'READOUT' ROUTINE

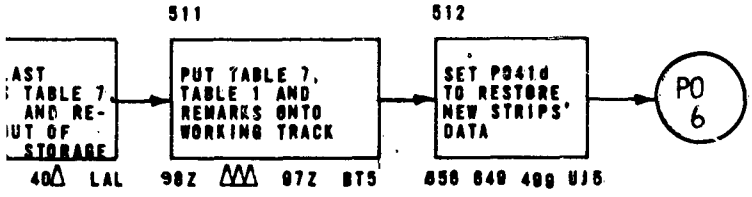
AST
TABLE 7
AND RE-
UT OF
STORAGE
40Δ LAL
511
PUT TABLE 7, TABLE 1 AND REMARKS ONTO WORKING TRACK
98Z 97Z BT5
512
SET P041d TO RESTORE NEW STRIPS' DATA
656 649 499 UJ5
PO 6

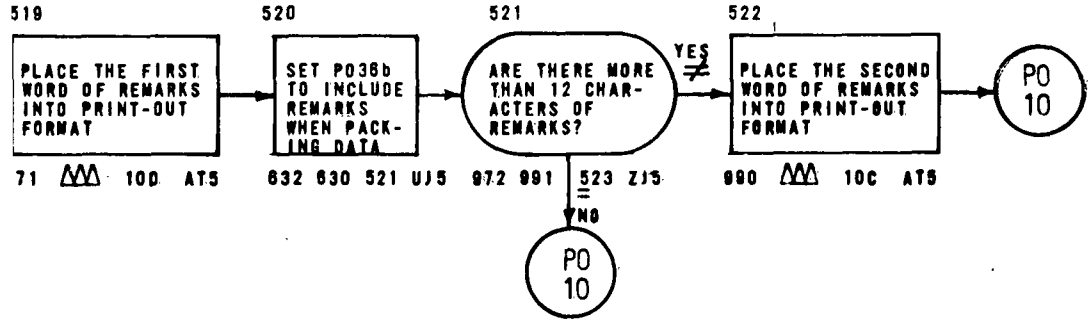
519
PLACE THE FIRST WORD OF REMARKS INTO PRINT-OUT FORMAT
71 100 AT5
520
SET P036b TO INCLUDE REMARKS WHEN PACK-ING DATA
632 630 521 UJ5
521
ARE THERE MORE THAN 12 CHAR-ACTERS OF REMARKS?
972 991 523 ZJ5
YES
NO
PO 10
522
PLACE THE SECOND WORD OF REMARKS INTO PRINT-OUT FORMAT
990 10C AT5
PO 10

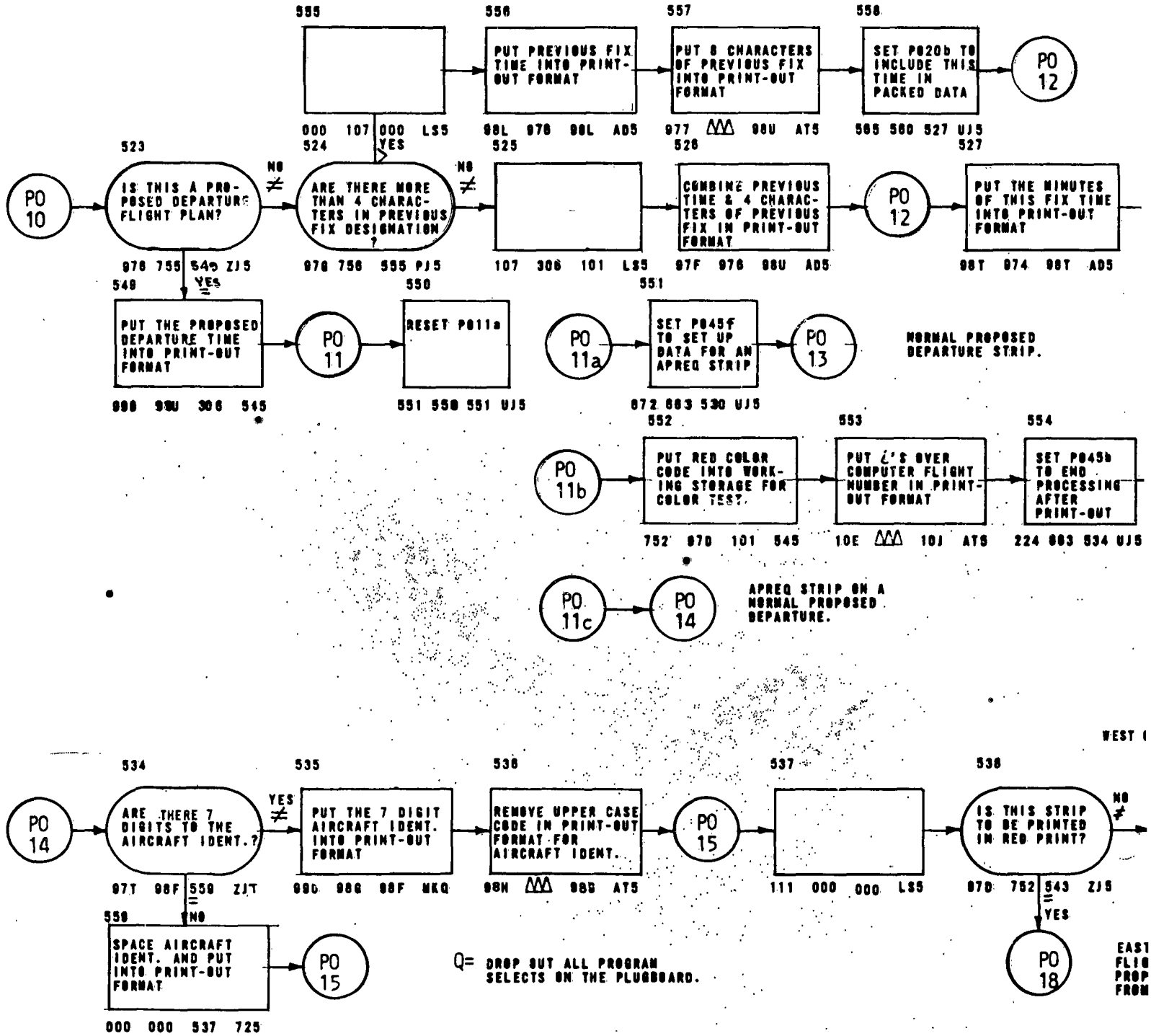
PO 10
523
IS THIS A PROPOSED DEPARTURE FLIGHT PLAN?
NO
YES
524
ARE THERE MORE THAN 4 CHARACTERS IN PREVIOUS FIX DESIGNATION ?
555
PUT PREVIOUS FIX TIME INTO PRINT-OUT FORMAT
556
PUT 8 CHARACTERS OF PREVIOUS FIX INTO PRINT-OUT FORMAT
557
SET P020b TO INCLUDE THIS TIME IN PACKED DATA
558
PO 12
525
526
COMBINE PREVIOUS TIME & 4 CHARACTERS OF PREVIOUS FIX IN PRINT-OUT FORMAT
PO 12
527
PUT THE MINUTES OF THIS FIX TIME INTO PRINT-OUT FORMAT
548
PUT THE PROPOSED DEPARTURE TIME INTO PRINT-OUT FORMAT
PO 11
550
RESET P011a
PO 11a
551
SET P045f TO SET UP DATA FOR AN APREQ STRIP
PO 13
NORMAL PROPOSED DEPARTURE STRIP.
PO 11b
552
PUT RED COLOR CODE INTO WORKING STORAGE FOR COLOR TEST.
553
PUT ¿'S OVER COMPUTER FLIGHT NUMBER IN PRINT-OUT FORMAT
554
SET P045b TO END PROCESSING AFTER PRINT-OUT
PO 11c
PO 14
APREQ STRIP ON A NORMAL PROPOSED DEPARTURE.
PO 14
534
ARE THERE 7 DIGITS TO THE AIRCRAFT IDENT.?
YES
535
PUT THE 7 DIGIT AIRCRAFT IDENT. INTO PRINT-OUT FORMAT
536
REMOVE UPPER CASE CODE IN PRINT-OUT FORMAT FOR AIRCRAFT IDENT.
PO 15
537
538
IS THIS STRIP TO BE PRINTED IN RED PRINT?
NO
YES
PO 18
559
NO
SPACE AIRCRAFT IDENT. AND PUT INTO PRINT-OUT FORMAT
PO 15
Q= DROP OUT ALL PROGRAM SELECTS ON THE PLUGBOARD.

1

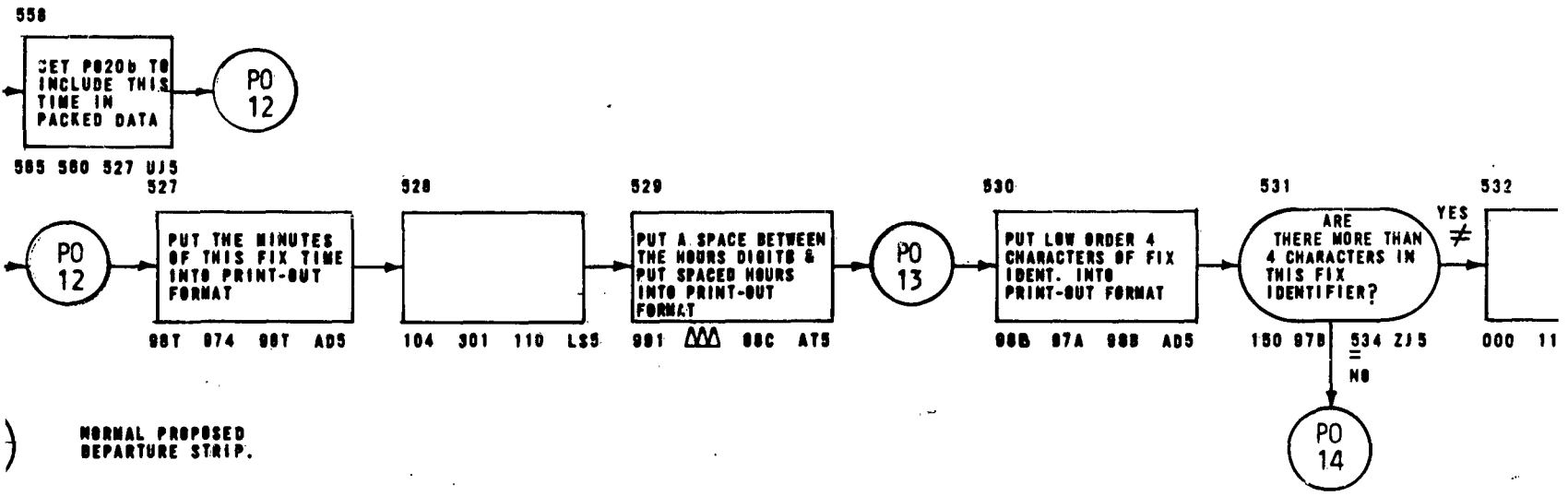

NORMAL PROPOSED DEPARTURE STRIP.

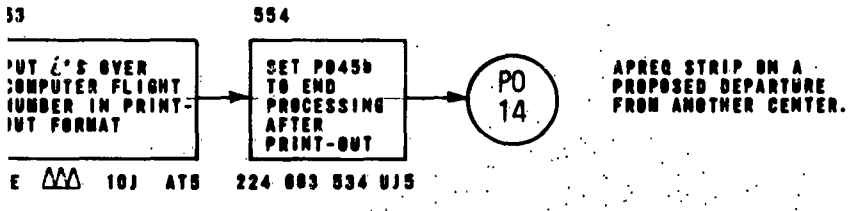

APREQ STRIP ON A PROPOSED DEPARTURE FROM ANOTHER CENTER.

ON A
SED

WEST OR SOUTH BOUND

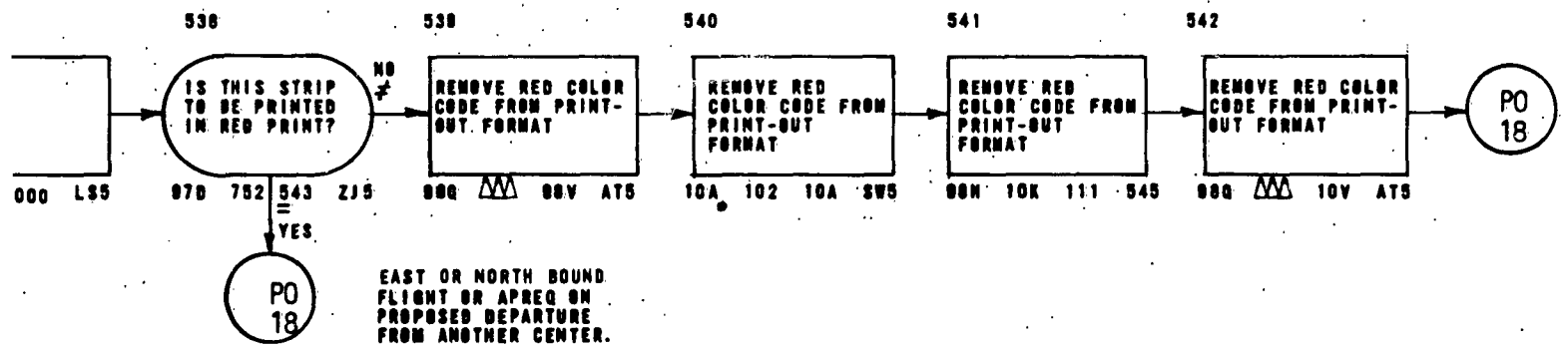

EAST OR NORTH BOUND FLIGHT OR APREQ ON PROPOSED DEPARTURE FROM ANOTHER CENTER.

2

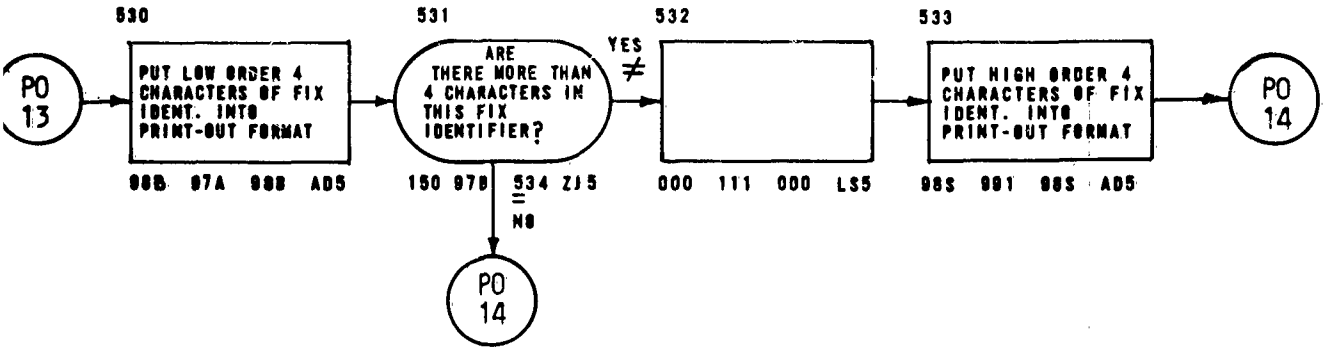
530
531
532
533
PO 13
PUT LOW ORDER 4 CHARACTERS OF FIX IDENT. INTO PRINT-OUT FORMAT
ARE THERE MORE THAN 4 CHARACTERS IN THIS FIX IDENTIFIER?
YES ≠
PUT HIGH ORDER 4 CHARACTERS OF FIX IDENT. INTO PRINT-OUT FORMAT
PO 14
000 111 000 LS5
NO
PO 14

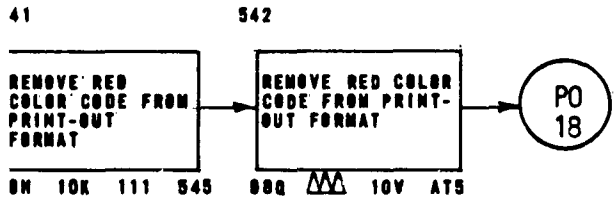
41
542
REMOVE RED COLOR CODE FROM PRINT-OUT FORMAT
REMOVE RED COLOR CODE FROM PRINT-OUT FORMAT
PO 18
10K 111 545
10V AT5

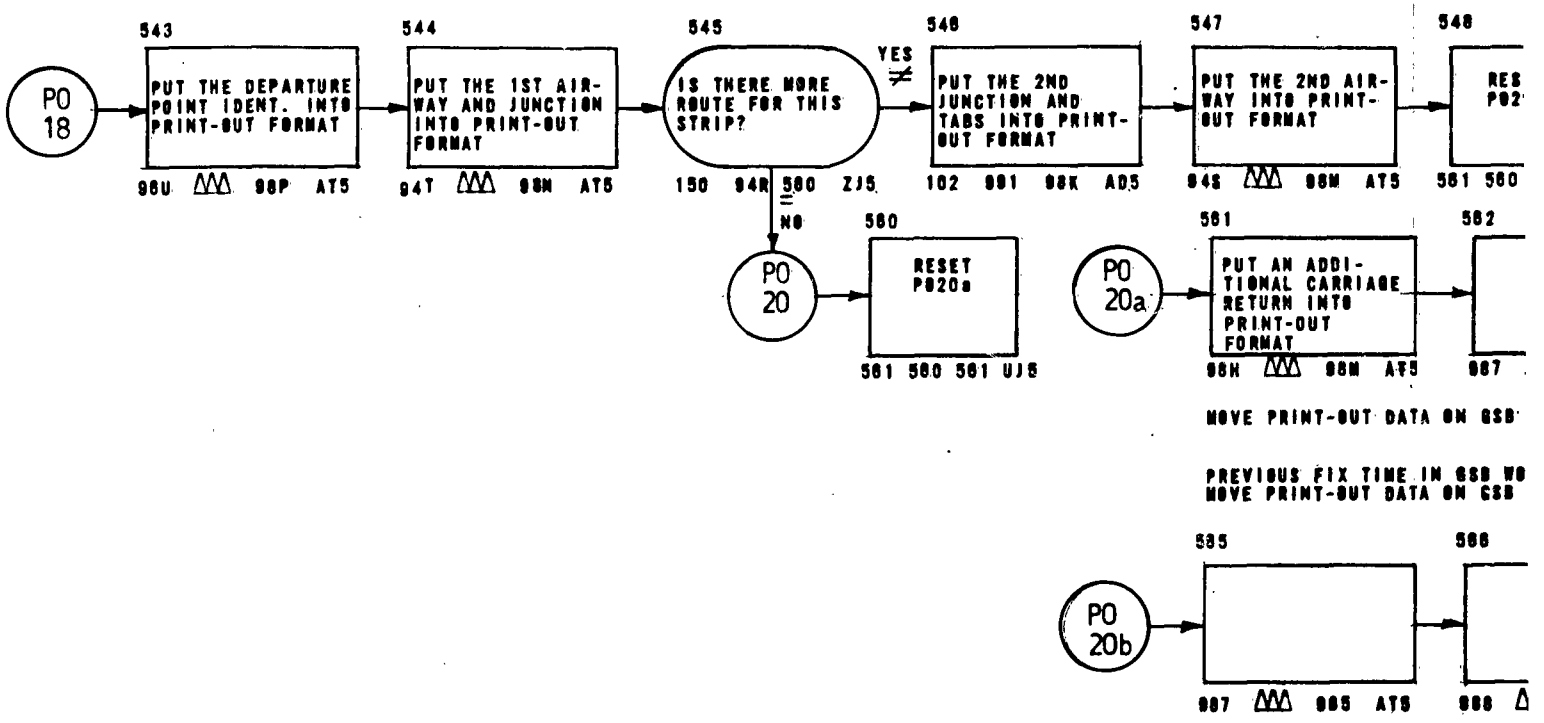
PO 18
543
PUT THE DEPARTURE POINT IDENT. INTO PRINT-OUT FORMAT
96U 98P AT5
544
PUT THE 1ST AIR-WAY AND JUNCTION INTO PRINT-OUT FORMAT
94T 98N AT5
545
IS THERE MORE ROUTE FOR THIS STRIP?
YES
NO
150 94R 580 ZJ5
546
PUT THE 2ND JUNCTION AND TABS INTO PRINT-OUT FORMAT
102 991 98K AD5
547
PUT THE 2ND AIR-WAY INTO PRINT-OUT FORMAT
94S 98M AT5
548
561 560
PO 20
580
RESET P020a
561 580 561 UJ5
PO 20a
581
PUT AN ADDI-TIONAL CARRIAGE RETURN INTO PRINT-OUT FORMAT
98H 98M AT5
582
987
MOVE PRINT-OUT DATA ON GSB
PREVIOUS FIX TIME IN GSB WO
MOVE PRINT-OUT DATA ON GSB
PO 20b
585
987 985 AT5
586
988

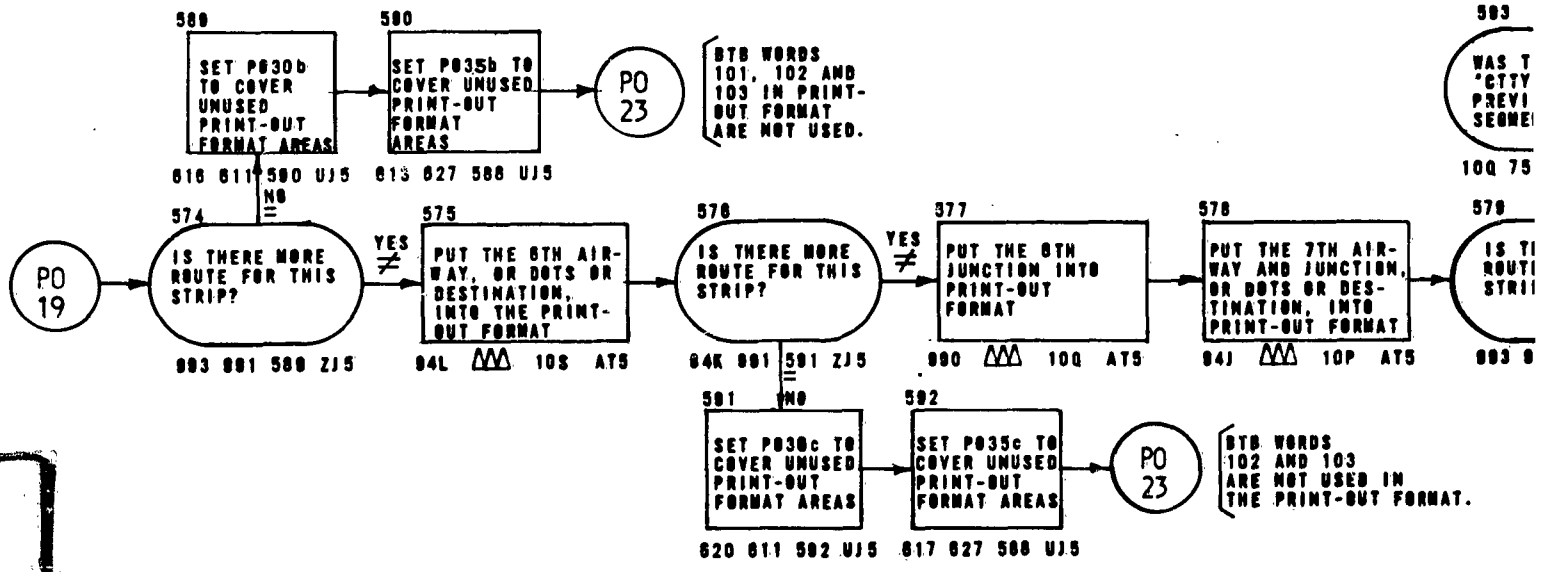
PO 19
574
IS THERE MORE ROUTE FOR THIS STRIP?
NO
YES
993 991 589 ZJ5
589
SET P030b TO COVER UNUSED PRINT-OUT FORMAT AREAS
616 611 590 UJ5
590
SET P035b TO COVER UNUSED PRINT-OUT FORMAT AREAS
613 627 588 UJ5
PO 23
BTB WORDS 101, 102 AND 103 IN PRINT-OUT FORMAT ARE NOT USED.
575
PUT THE 6TH AIR-WAY, OR DOTS OR DESTINATION, INTO THE PRINT-OUT FORMAT
94L 10S AT5
576
IS THERE MORE ROUTE FOR THIS STRIP?
YES
NO
64K 991 591 ZJ5
577
PUT THE 6TH JUNCTION INTO PRINT-OUT FORMAT
990 10Q AT5
578
PUT THE 7TH AIR-WAY AND JUNCTION, OR DOTS OR DES-TINATION, INTO PRINT-OUT FORMAT
94J 10P AT5
579
593
100 75
591
SET P030c TO COVER UNUSED PRINT-OUT FORMAT AREAS
620 611 592 UJ5
592
SET P035c TO COVER UNUSED PRINT-OUT FORMAT AREAS
617 627 588 UJ5
PO 23
BTB WORDS 102 AND 103 ARE NOT USED IN THE PRINT-OUT FORMAT.

1

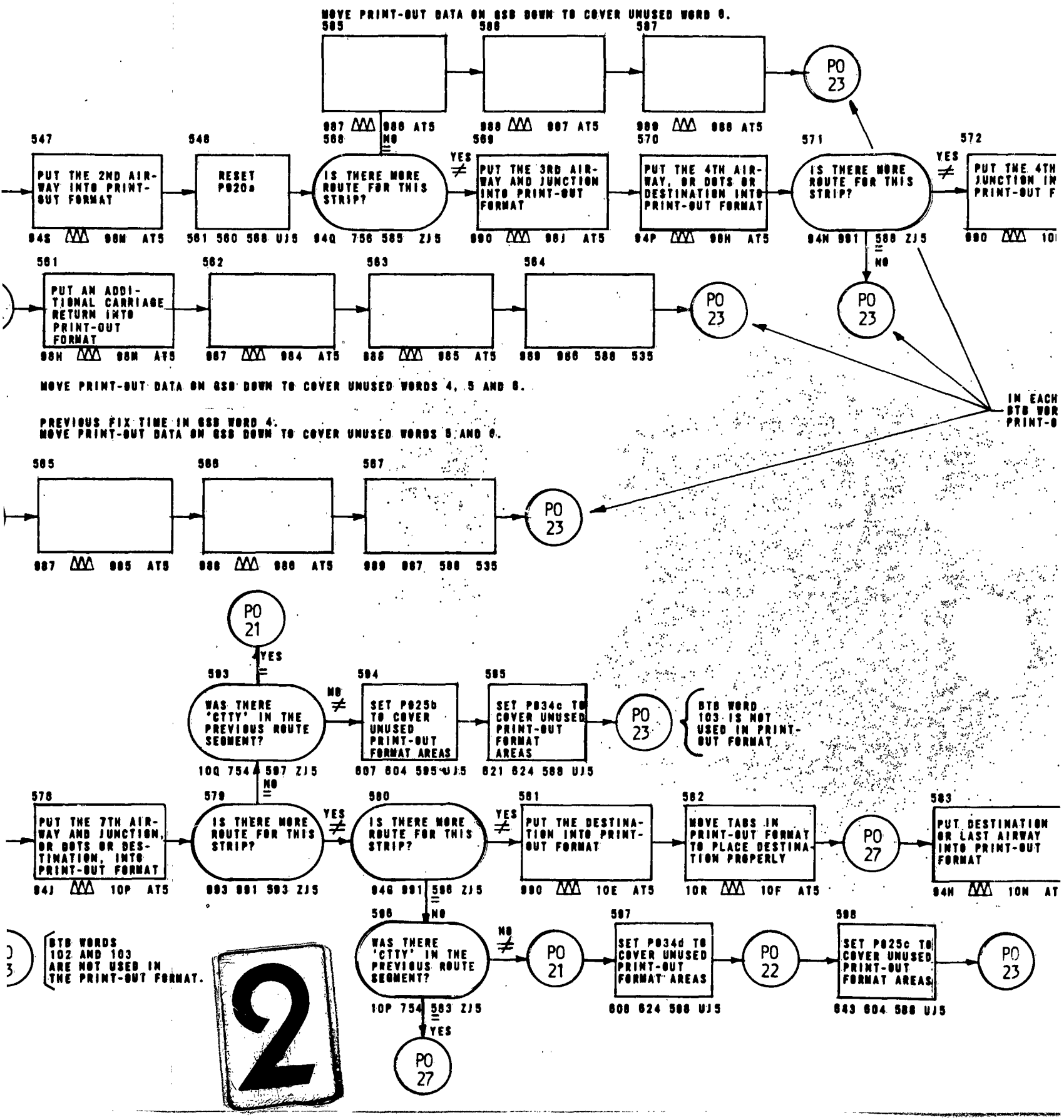
MOVE PRINT-OUT DATA ON GSB DOWN TO COVER UNUSED WORD 6.
565
566
567
PO 23
547
PUT THE 2ND AIR-WAY INTO PRINT-OUT FORMAT
548
RESET P020a
568
IS THERE MORE ROUTE FOR THIS STRIP?
YES
NO
569
PUT THE 3RD AIR-WAY AND JUNCTION INTO PRINT-OUT FORMAT
570
PUT THE 4TH AIR-WAY, OR DOTS OR DESTINATION INTO PRINT-OUT FORMAT
571
IS THERE MORE ROUTE FOR THIS STRIP?
572
PUT THE 4TH JUNCTION IN PRINT-OUT F
561
PUT AN ADDI-TIONAL CARRIAGE RETURN INTO PRINT-OUT FORMAT
562
563
564
PO 23
PO 23
MOVE PRINT-OUT DATA ON GSB DOWN TO COVER UNUSED WORDS 4, 5 AND 6.
PREVIOUS FIX TIME IN GSB WORD 4.
MOVE PRINT-OUT DATA ON GSB DOWN TO COVER UNUSED WORDS 5 AND 6.
IN EACH BTB WOR PRINT-O
565
566
567
PO 23
PO 21
YES
593
WAS THERE 'CTTY' IN THE PREVIOUS ROUTE SEGMENT?
NO
594
SET P025b TO COVER UNUSED PRINT-OUT FORMAT AREAS
595
SET P034c TO COVER UNUSED PRINT-OUT FORMAT AREAS
PO 23
BTB WORD 103 IS NOT USED IN PRINT-OUT FORMAT
578
PUT THE 7TH AIR-WAY AND JUNCTION, OR DOTS OR DES-TINATION, INTO PRINT-OUT FORMAT
579
IS THERE MORE ROUTE FOR THIS STRIP?
580
IS THERE MORE ROUTE FOR THIS STRIP?
581
PUT THE DESTINA-TION INTO PRINT-OUT FORMAT
582
MOVE TABS IN PRINT-OUT FORMAT TO PLACE DESTINA-TION PROPERLY
PO 27
583
PUT DESTINATION OR LAST AIRWAY INTO PRINT-OUT FORMAT
BTB WORDS 102 AND 103 ARE NOT USED IN THE PRINT-OUT FORMAT.
586
WAS THERE 'CTTY' IN THE PREVIOUS ROUTE SEGMENT?
PO 21
587
SET P034d TO COVER UNUSED PRINT-OUT FORMAT AREAS
PO 22
588
SET P025c TO COVER UNUSED PRINT-OUT FORMAT AREAS
PO 23
PO 27

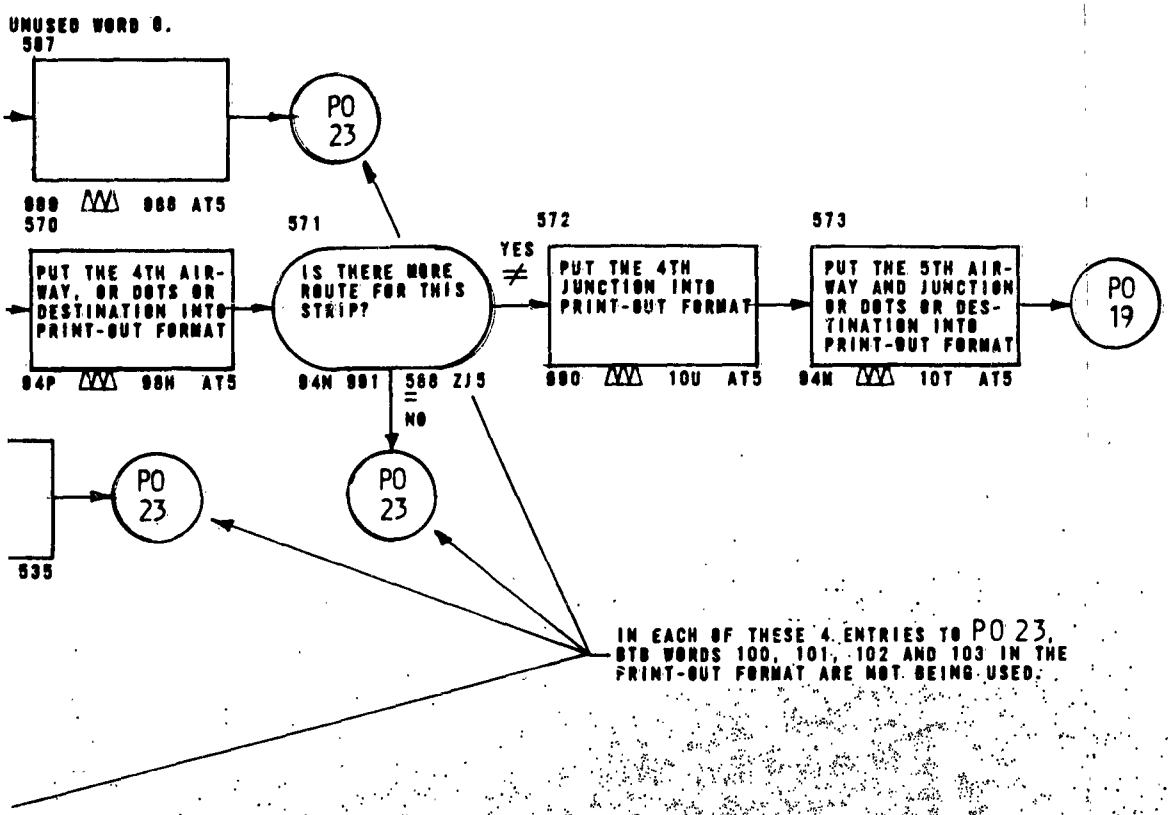
UNUSED WORD 8.
587
PO 23
570
PUT THE 4TH AIR-WAY, OR DOTS OR DESTINATION INTO PRINT-OUT FORMAT
571
IS THERE MORE ROUTE FOR THIS STRIP?
YES ≠
572
PUT THE 4TH JUNCTION INTO PRINT-OUT FORMAT
573
PUT THE 5TH AIR-WAY AND JUNCTION OR DOTS OR DES-TINATION INTO PRINT-OUT FORMAT
PO 19
NO =
PO 23
PO 23
535
IN EACH OF THESE 4 ENTRIES TO PO 23, BTB WORDS 100, 101, 102 AND 103 IN THE PRINT-OUT FORMAT ARE NOT BEING USED.

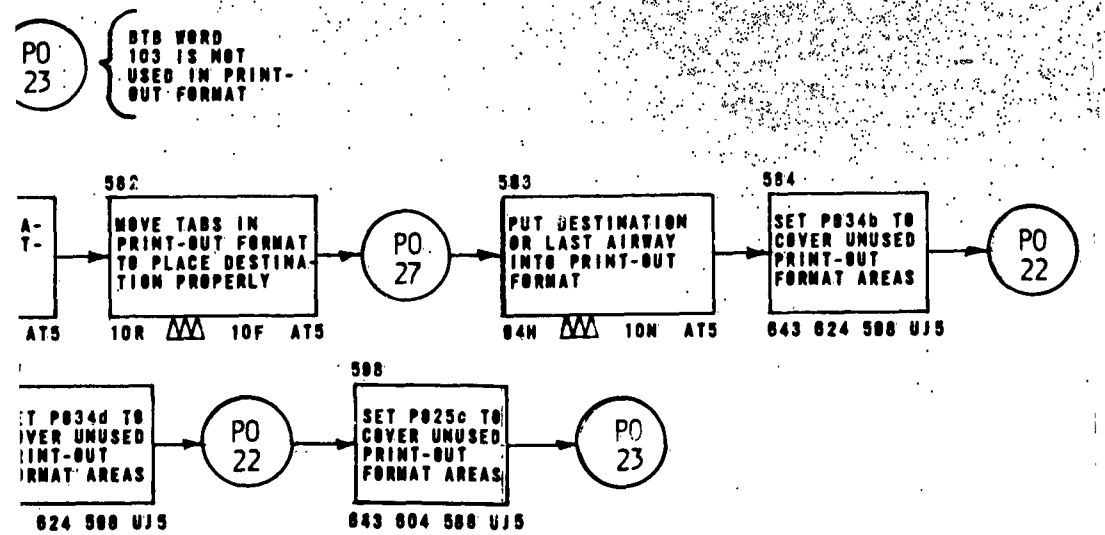
PO 23
BTB WORD 103 IS NOT USED IN PRINT-OUT FORMAT
582
MOVE TABS IN PRINT-OUT FORMAT TO PLACE DESTINA-TION PROPERLY
PO 27
583
PUT DESTINATION OR LAST AIRWAY INTO PRINT-OUT FORMAT
584
SET P834b TO COVER UNUSED PRINT-OUT FORMAT AREAS
PO 22
PO 22
598
SET P825c TO COVER UNUSED PRINT-OUT FORMAT AREAS
PO 23

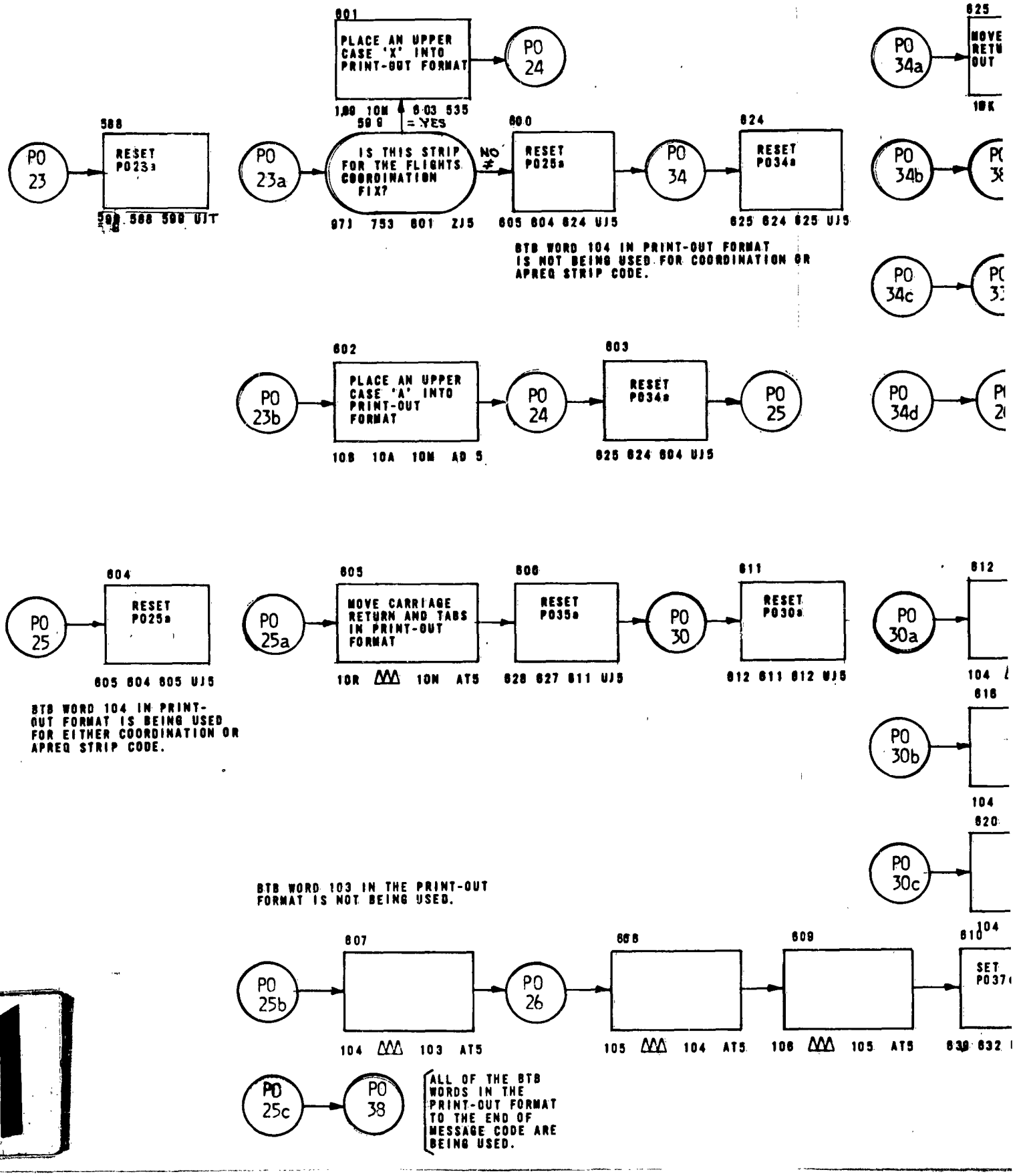
PO 23
588
RESET PO23a
588 588 UJT
PO 23a
IS THIS STRIP FOR THE FLIGHTS COORDINATION FIX?
= YES
NO ≠
973 753 601 ZJ5
601
PLACE AN UPPER CASE 'X' INTO PRINT-OUT FORMAT
PO 24
600
RESET PO25a
605 604 624 UJ5
PO 34
624
RESET PO34a
625 624 625 UJ5
BTB WORD 104 IN PRINT-OUT FORMAT IS NOT BEING USED FOR COORDINATION OR APREQ STRIP CODE.
PO 23b
602
PLACE AN UPPER CASE 'A' INTO PRINT-OUT FORMAT
108 10A 10M AD 5
PO 24
603
RESET PO34a
625 624 604 UJ5
PO 25
PO 34a
625
PO 34b
PO 34c
PO 34d
PO 25
604
RESET PO25a
605 604 605 UJ5
BTB WORD 104 IN PRINT-OUT FORMAT IS BEING USED FOR EITHER COORDINATION OR APREQ STRIP CODE.
PO 25a
605
MOVE CARRIAGE RETURN AND TABS IN PRINT-OUT FORMAT
10R 10N AT5
606
RESET PO35a
628 627 611 UJ5
PO 30
611
RESET PO30a
612 611 612 UJ5
PO 30a
612
104
PO 30b
616
PO 30c
620
104
BTB WORD 103 IN THE PRINT-OUT FORMAT IS NOT BEING USED.
PO 25b
607
104 103 AT5
PO 26
608
105 104 AT5
609
106 105 AT5
610
104
SET PO37
PO 25c
PO 38
ALL OF THE BTB WORDS IN THE PRINT-OUT FORMAT TO THE END OF MESSAGE CODE ARE BEING USED.

1

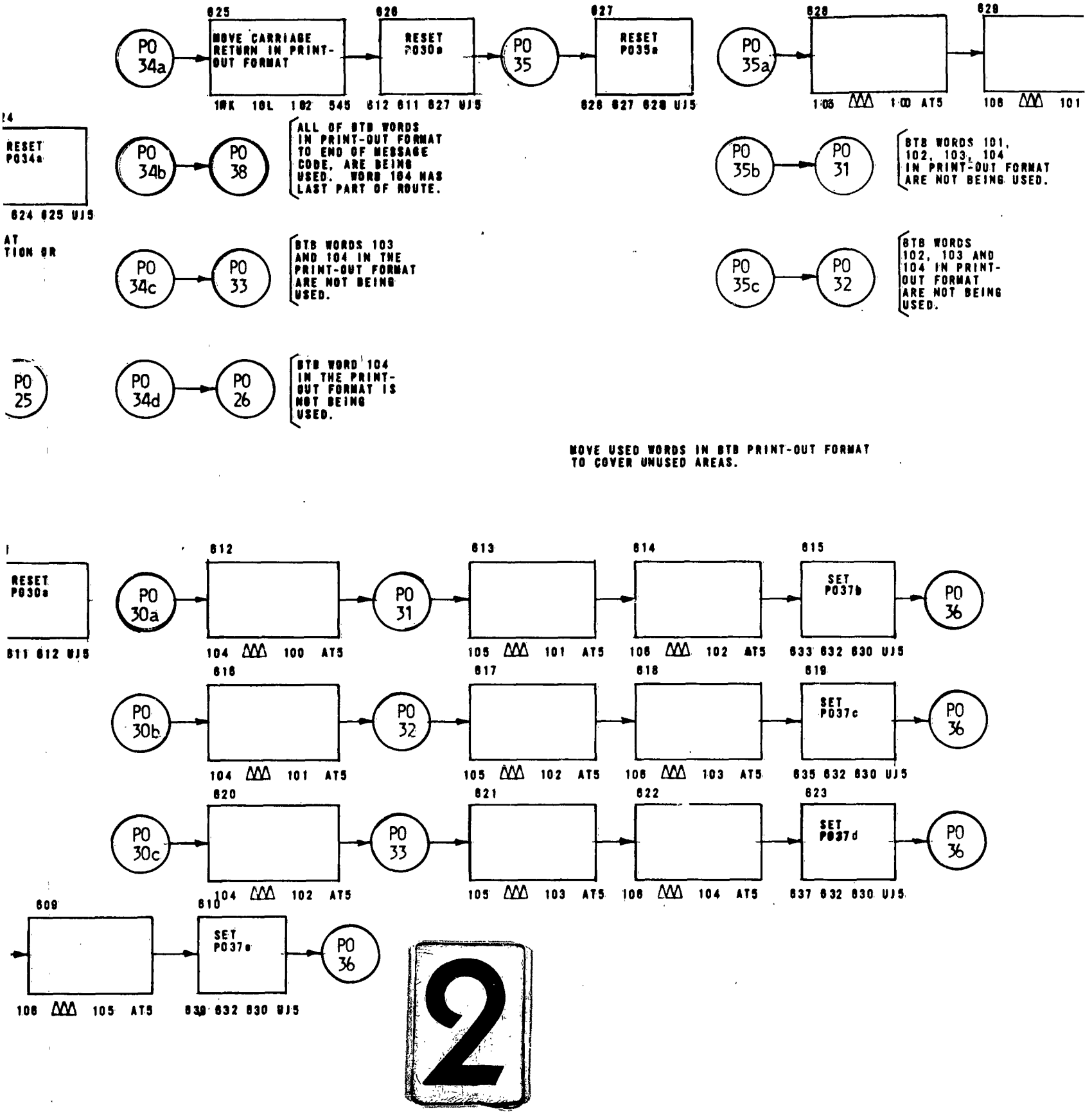
625
MOVE CARRIAGE RETURN IN PRINT-OUT FORMAT
1WK 10L 102 545 612 611 627 UJ5
626
RESET P030a
PO 34a
PO 35
627
RESET P035a
626 627 628 UJ5
628
629
PO 35a
105 100 AT5
106 101
RESET P034a
624 625 UJ5
PO 34b
PO 38
ALL OF BTB WORDS IN PRINT-OUT FORMAT TO END OF MESSAGE CODE, ARE BEING USED. WORD 104 HAS LAST PART OF ROUTE.
PO 35b
PO 31
BTB WORDS 101, 102, 103, 104 IN PRINT-OUT FORMAT ARE NOT BEING USED.
AT
TION OR
PO 34c
PO 33
BTB WORDS 103 AND 104 IN THE PRINT-OUT FORMAT ARE NOT BEING USED.
PO 35c
PO 32
BTB WORDS 102, 103 AND 104 IN PRINT-OUT FORMAT ARE NOT BEING USED.
PO 25
PO 34d
PO 26
BTB WORD 104 IN THE PRINT-OUT FORMAT IS NOT BEING USED.
MOVE USED WORDS IN BTB PRINT-OUT FORMAT TO COVER UNUSED AREAS.
RESET P030a
611 612 UJ5
PO 30a
612
104 100 AT5
PO 31
613
105 101 AT5
614
106 102 AT5
615
SET P037b
633 632 630 UJ5
PO 36
PO 30b
616
104 101 AT5
PO 32
617
105 102 AT5
618
106 103 AT5
619
SET P037c
635 632 630 UJ5
PO 36
PO 30c
620
104 102 AT5
PO 33
621
105 103 AT5
622
106 104 AT5
623
SET P037d
637 632 630 UJ5
PO 36
609
106 105 AT5
610
SET P037e
639 632 630 UJ5
PO 36

2

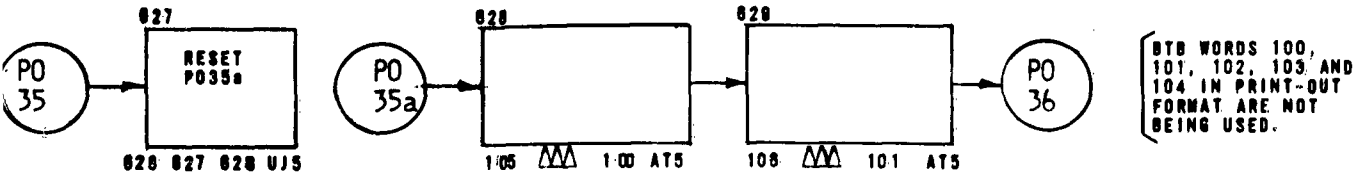

BTB WORDS 100, 101, 102, 103 AND 104 IN PRINT-OUT FORMAT ARE NOT BEING USED.

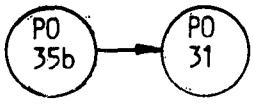

BTB WORDS 101, 102, 103, 104 IN PRINT-OUT FORMAT ARE NOT BEING USED.

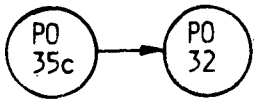

BTB WORDS 102, 103 AND 104 IN PRINT-OUT FORMAT ARE NOT BEING USED.

MOVE USED WORDS IN BTB PRINT-OUT FORMAT TO COVER UNUSED AREAS.

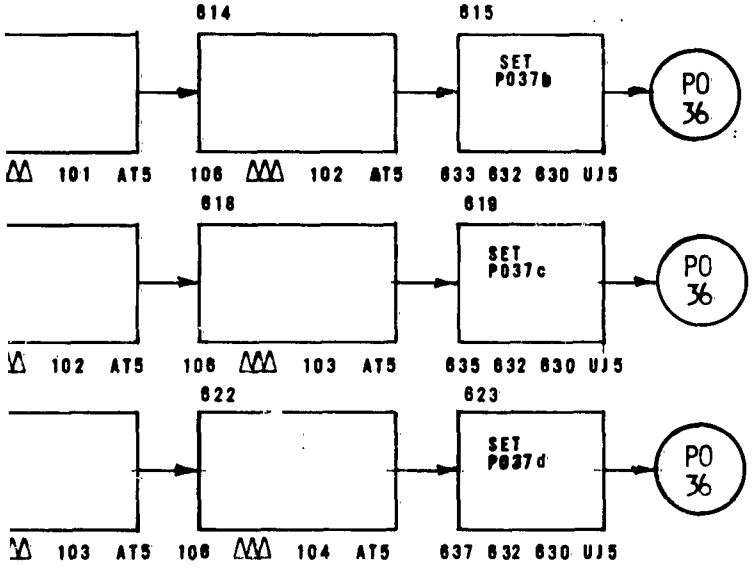

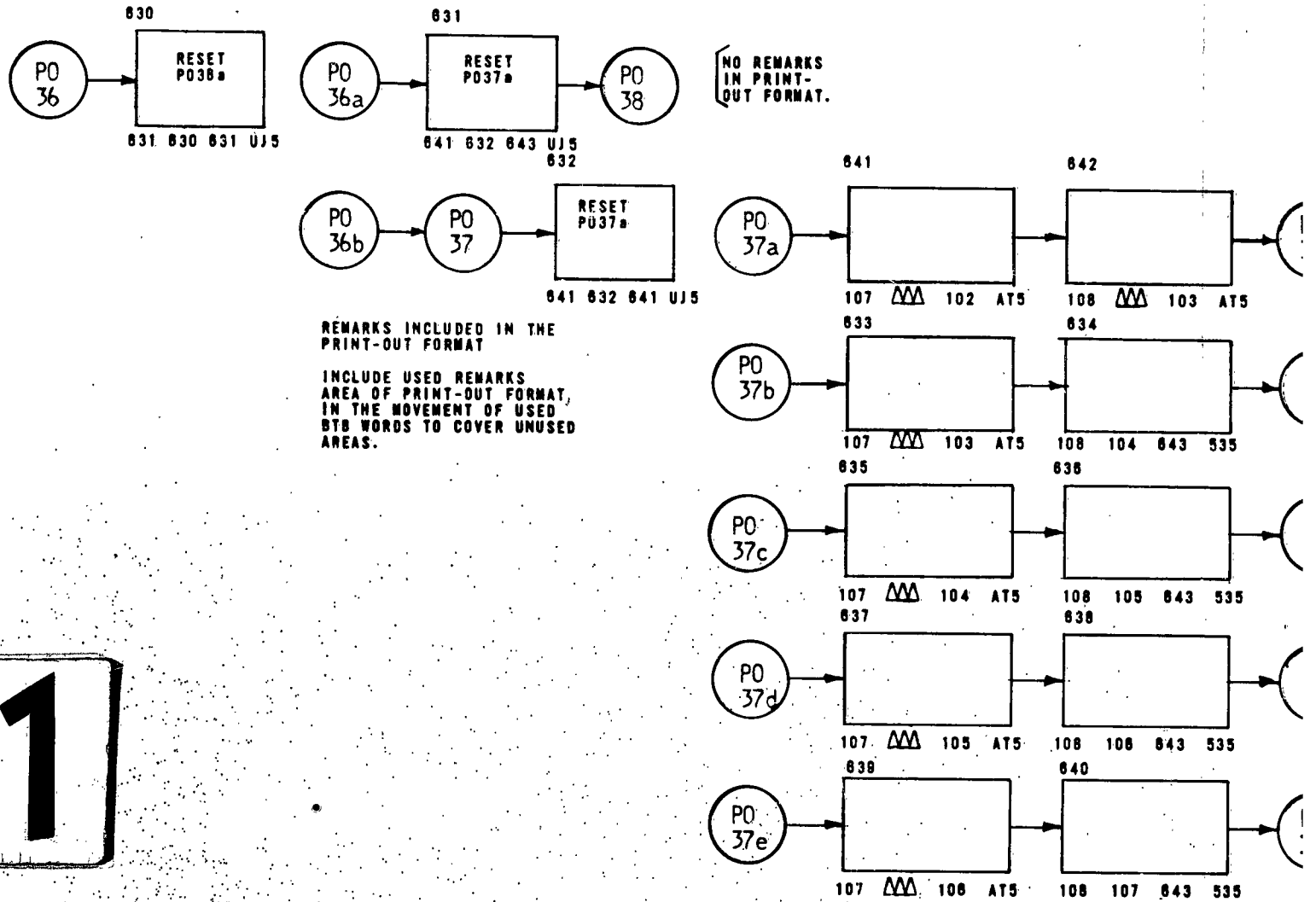

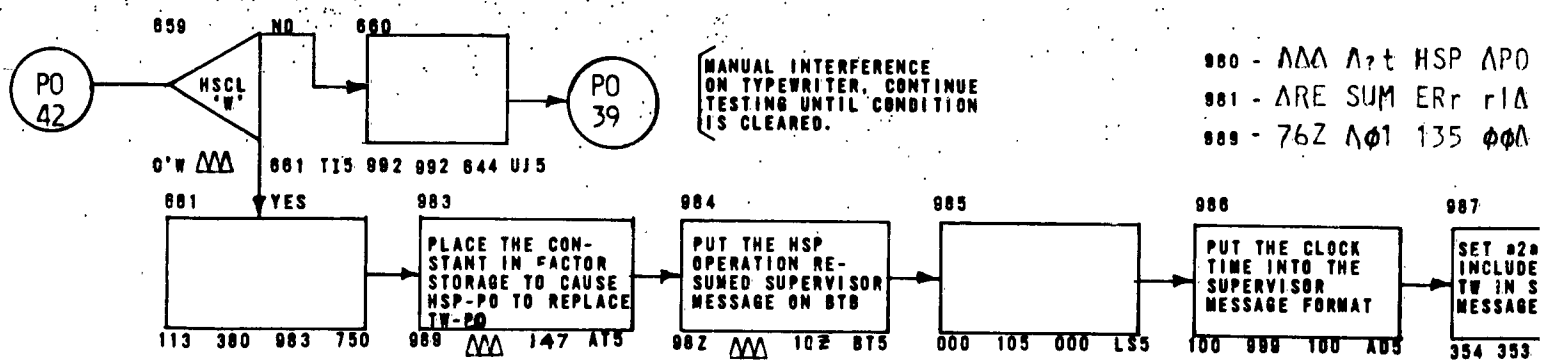

HSCL-W ON TYPEWRITER INDICATES THAT THE HSP IS NOW IN OPERATION AND READY TO PRINT STRIPS.

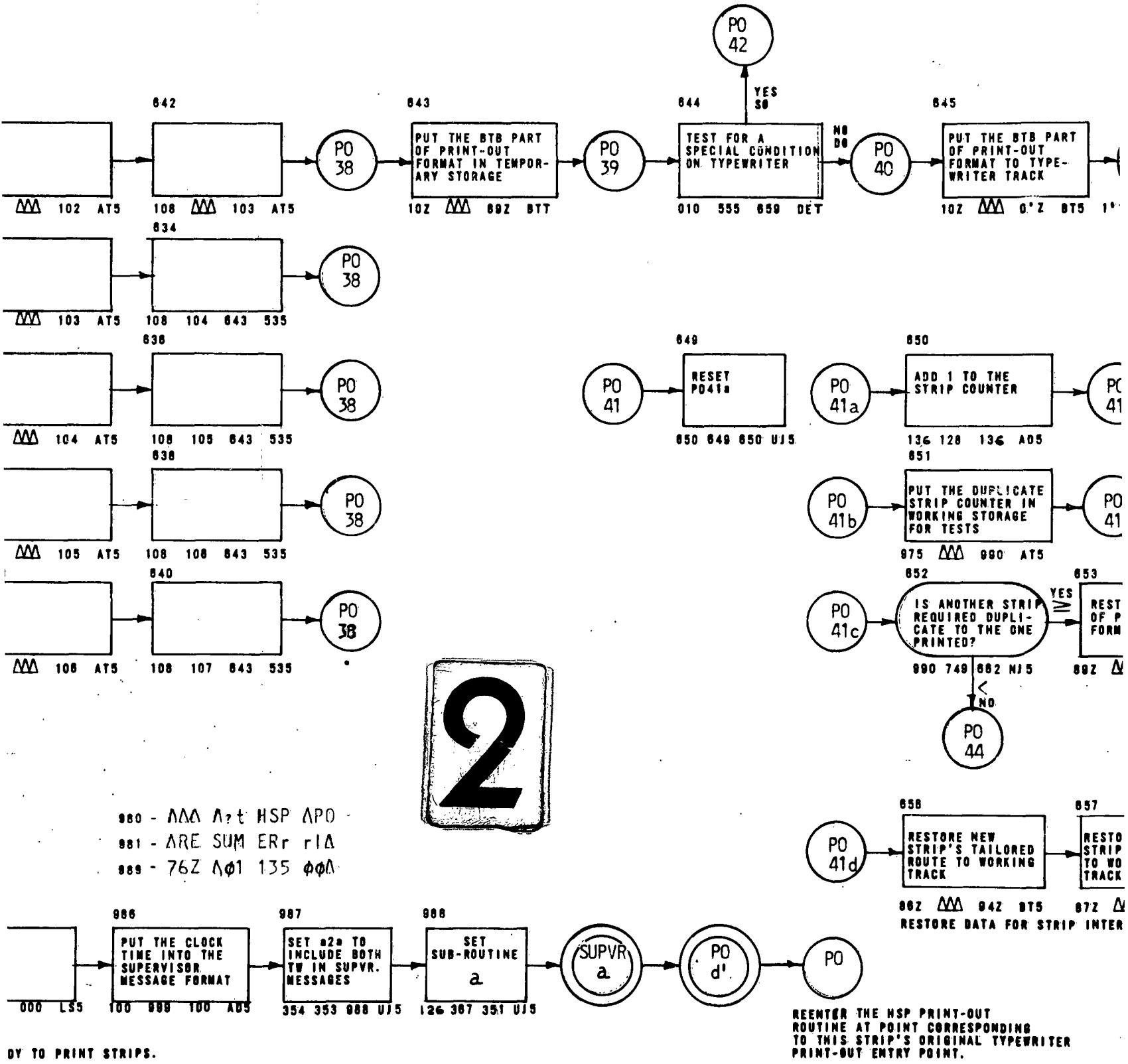
PO 42
YES SO
642
643
644
645
PUT THE BTB PART OF PRINT-OUT FORMAT IN TEMPORARY STORAGE
TEST FOR A SPECIAL CONDITION ON TYPEWRITER
NO DO
PUT THE BTB PART OF PRINT-OUT FORMAT TO TYPEWRITER TRACK
PO 38
PO 39
PO 40
102 AT5
108 103 AT5
10Z 89Z BTT
010 555 659 DET
10Z 0'Z BT5
634
103 AT5
108 104 643 535
636
104 AT5
108 105 643 535
638
105 AT5
108 106 643 535
640
106 AT5
108 107 643 535
PO 41
649
RESET P041a
650 649 650 UJ5
PO 41a
650
ADD 1 TO THE STRIP COUNTER
136 128 136 AD5
PO 41b
651
PUT THE DUPLICATE STRIP COUNTER IN WORKING STORAGE FOR TESTS
975 990 AT5
PO 41c
652
IS ANOTHER STRIP REQUIRED DUPLICATE TO THE ONE PRINTED?
YES
NO
990 749 662 NJ5
653
89Z
PO 44
PO 41d
658
RESTORE NEW STRIP'S TAILORED ROUTE TO WORKING TRACK
86Z 94Z BT5
657
87Z
RESTORE DATA FOR STRIP INTER
980 - ΛΛΛ Λ?t HSP ΛPO
981 - ΛRE SUM ERr rIΛ
989 - 76Z ΛΦ1 135 ΦΦΛ
986
PUT THE CLOCK TIME INTO THE SUPERVISOR MESSAGE FORMAT
987
SET a2a TO INCLUDE BOTH TW IN SUPVR. MESSAGES
988
SET SUB-ROUTINE a
SUPVR a
PO d'
PO
000 LS5
100 989 100 AD5
354 353 988 UJ5
126 367 351 UJ5
REENTER THE HSP PRINT-OUT ROUTINE AT POINT CORRESPONDING TO THIS STRIP'S ORIGINAL TYPEWRITER PRINT-OUT ENTRY POINT.
DY TO PRINT STRIPS.

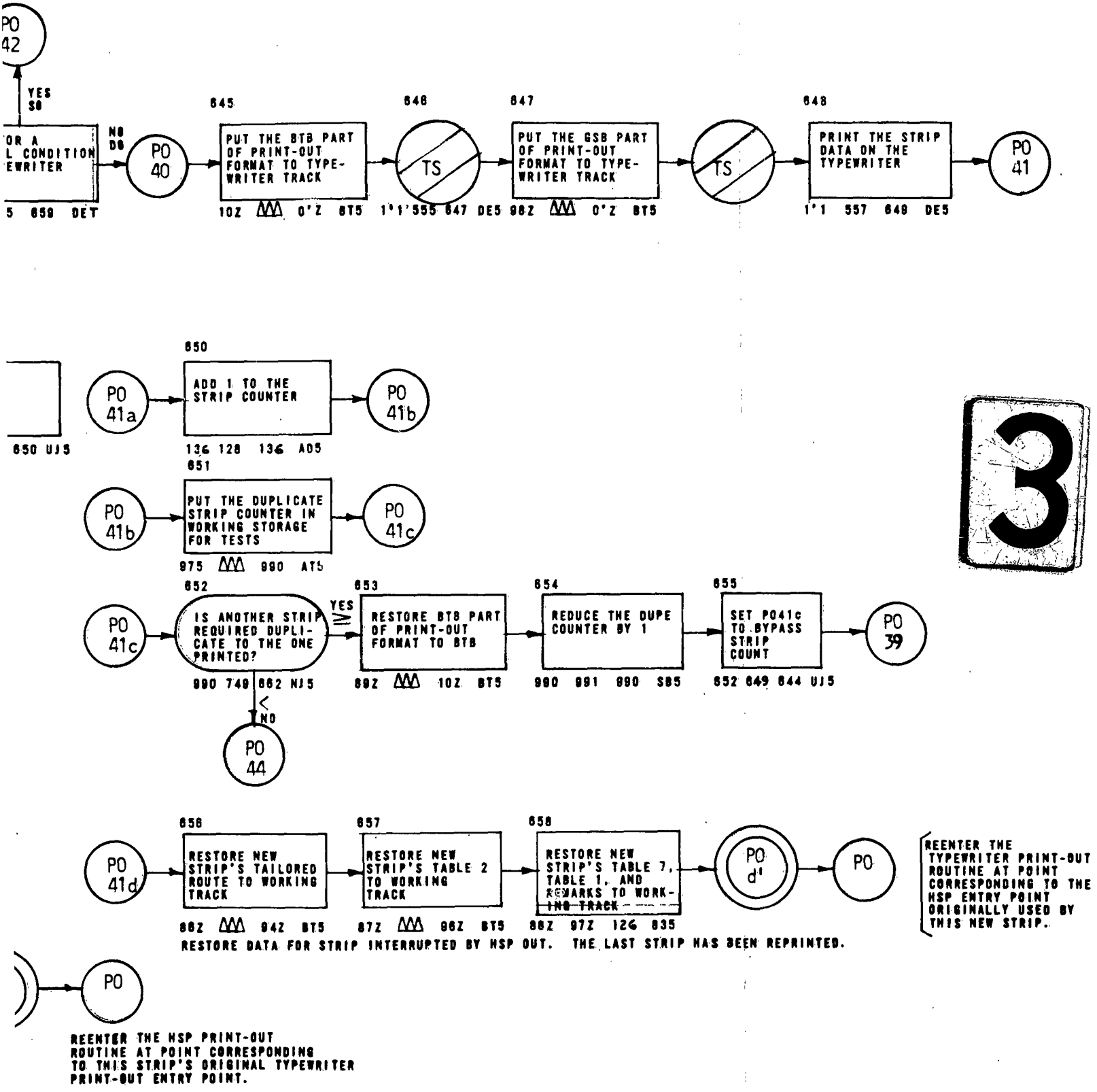
PO 42
YES S8
OR A L CONDITION EWRITER
5 659 DET
NO D8
PO 40
645
PUT THE BTB PART OF PRINT-OUT FORMAT TO TYPE-WRITER TRACK
10Z 0'Z BT5
646
TS
1'1'555 647 DE5
647
PUT THE GSB PART OF PRINT-OUT FORMAT TO TYPE-WRITER TRACK
98Z 0'Z BT5
TS
648
PRINT THE STRIP DATA ON THE TYPEWRITER
1'1 557 648 DE5
PO 41
650 UJ5
PO 41a
650
ADD 1 TO THE STRIP COUNTER
136 128 136 AD5
PO 41b
PO 41b
651
PUT THE DUPLICATE STRIP COUNTER IN WORKING STORAGE FOR TESTS
975 990 AT5
PO 41c
PO 41c
652
IS ANOTHER STRIP REQUIRED DUPLI-CATE TO THE ONE PRINTED?
990 749 662 NJ5
YES ≥
653
RESTORE BTB PART OF PRINT-OUT FORMAT TO BTB
89Z 10Z BT5
654
REDUCE THE DUPE COUNTER BY 1
990 991 990 S85
655
SET PO41c TO BYPASS STRIP COUNT
652 649 644 UJ5
PO 39
< NO
PO 44
PO 41d
656
RESTORE NEW STRIP'S TAILORED ROUTE TO WORKING TRACK
86Z 94Z BT5
657
RESTORE NEW STRIP'S TABLE 2 TO WORKING TRACK
87Z 96Z BT5
658
RESTORE NEW STRIP'S TABLE 7, TABLE 1, AND REMARKS TO WORK-ING TRACK
88Z 97Z 126 835
PO d'
PO
REENTER THE TYPEWRITER PRINT-OUT ROUTINE AT POINT CORRESPONDING TO THE HSP ENTRY POINT ORIGINALLY USED BY THIS NEW STRIP.
RESTORE DATA FOR STRIP INTERRUPTED BY HSP OUT. THE LAST STRIP HAS BEEN REPRINTED.
PO
REENTER THE HSP PRINT-OUT ROUTINE AT POINT CORRESPONDING TO THIS STRIP'S ORIGINAL TYPEWRITER PRINT-OUT ENTRY POINT.

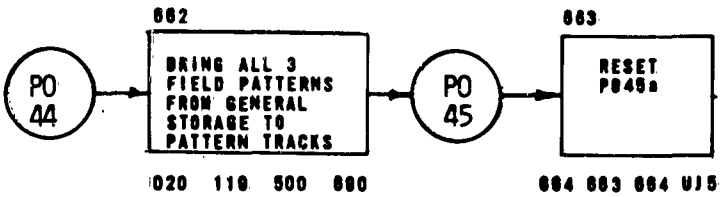

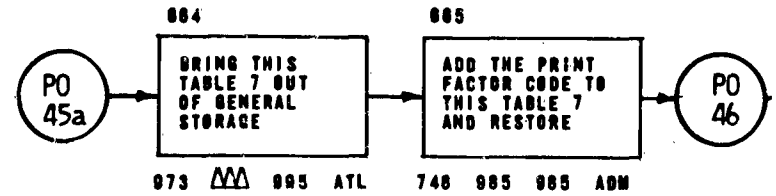

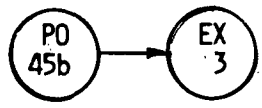

'X' MESSAGE ON PROPOSED DEPARTURE. RIDER STRIP IS PRINTED.
APREQ STRIP ON A PROPOSED DEPARTURE FROM ANOTHER CENTER.

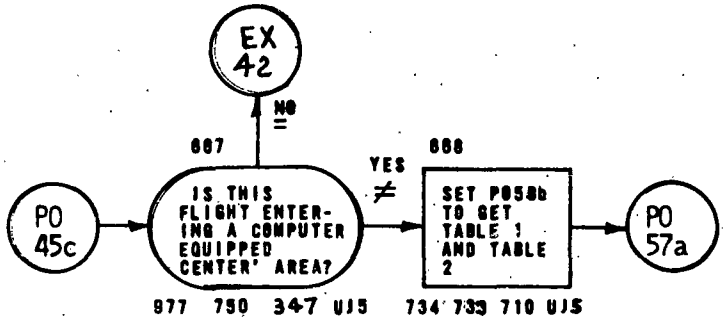

'X' MESSAGE ON A PREVIOUSLY COMPLETED ENROUTE FLIGHT PLAN. RIDER STRIP HAS JUST BEEN PRINTED.

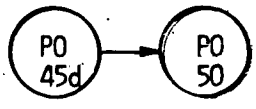

PROPOSED DEPARTURE WITH THE CONTINUATION ROUTE ON HAND WHEN ORIGINAL STRIPS WERE PRINTED. RIDER STRIP HAS JUST BEEN PRINTED

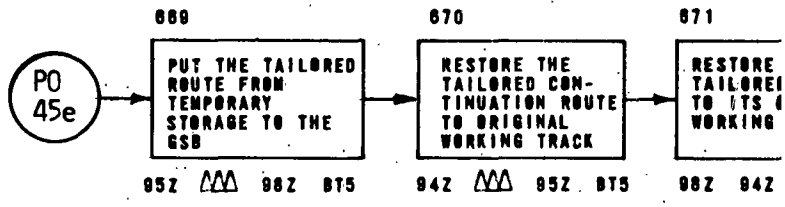

THE CONTINUATION ROUTE FOR AN ENROUTE FLIGHT PLAN WAS ON HAND WHEN THE LAST OF THE ORIGINAL STRIPS WAS PRINTED. THE RIDER STRIPS HAS JUST BEEN PRINTED.

PROPOSED DEPARTURE

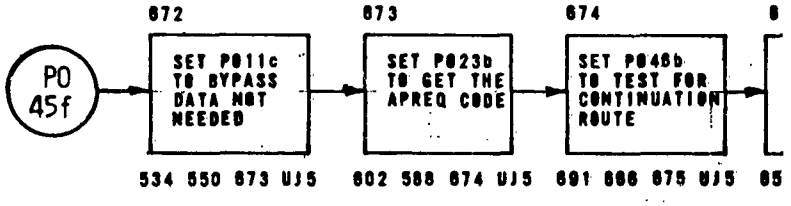

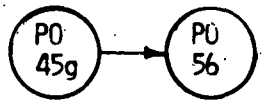

A STRIP HAS JUST BEEN PRINTED AS REQUESTED BY A CONTROLLER THRU THE READOUT ROUTINE. TEST FOR CONTINUATION ROUTE AND RIDER.

1

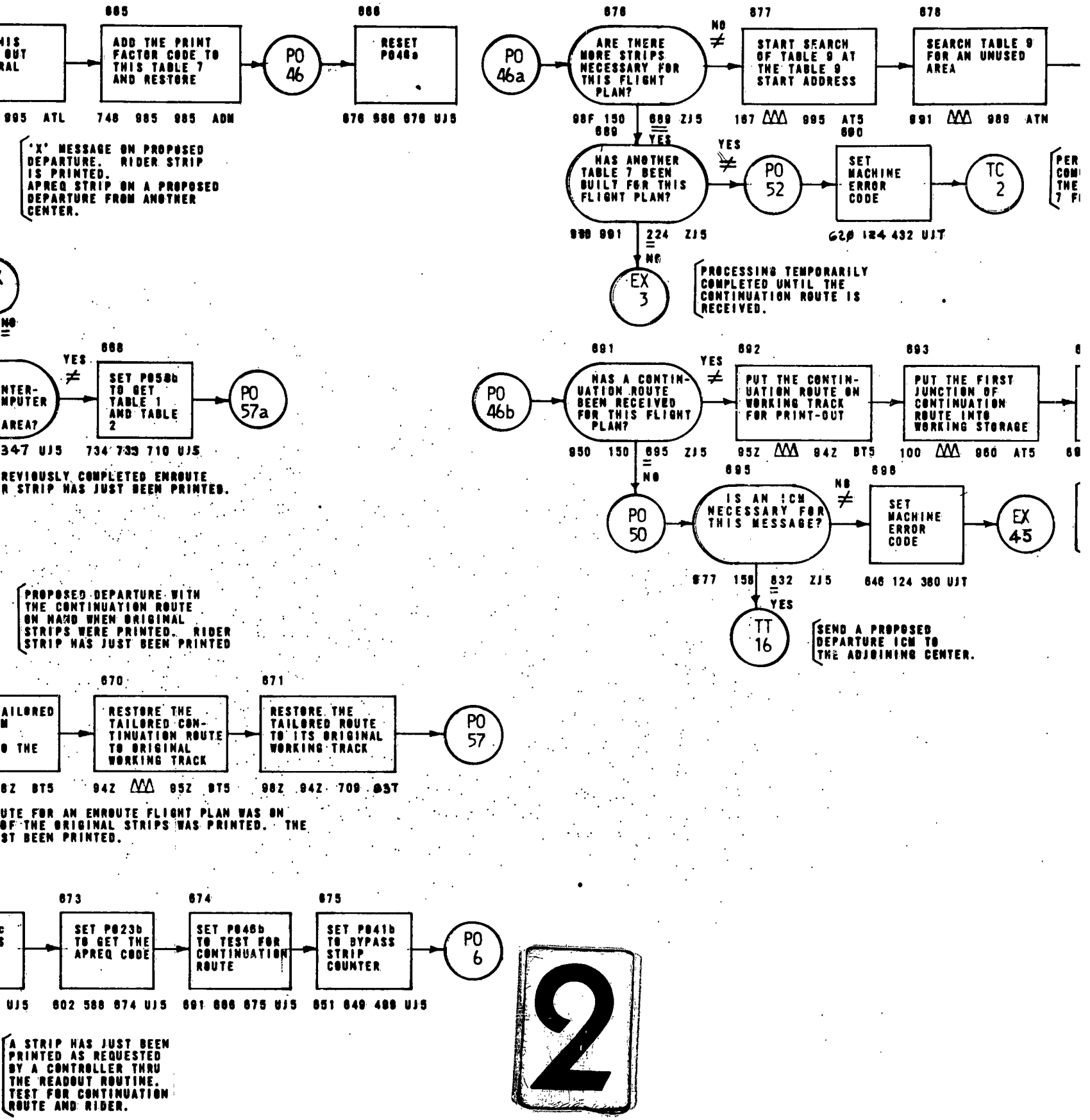

ADD THE PRINT FACTOR CODE TO THIS TABLE 7 AND RESTORE
PO 46
RESET P046a
'X' MESSAGE ON PROPOSED DEPARTURE. RIDER STRIP IS PRINTED. APREQ STRIP ON A PROPOSED DEPARTURE FROM ANOTHER CENTER.
PO 46a
ARE THERE MORE STRIPS NECESSARY FOR THIS FLIGHT PLAN?
START SEARCH OF TABLE 9 AT THE TABLE 9 START ADDRESS
SEARCH TABLE 9 FOR AN UNUSED AREA
HAS ANOTHER TABLE 7 BEEN BUILT FOR THIS FLIGHT PLAN?
PO 52
SET MACHINE ERROR CODE
TC 2
EX 3
PROCESSING TEMPORARILY COMPLETED UNTIL THE CONTINUATION ROUTE IS RECEIVED.
SET P058b TO GET TABLE 1 AND TABLE 2
PO 57a
REVIOUSLY COMPLETED ENROUTE R STRIP HAS JUST BEEN PRINTED.
PO 46b
HAS A CONTINUATION ROUTE BEEN RECEIVED FOR THIS FLIGHT PLAN?
PUT THE CONTINUATION ROUTE ON WORKING TRACK FOR PRINT-OUT
PUT THE FIRST JUNCTION OF CONTINUATION ROUTE INTO WORKING STORAGE
PO 50
IS AN ICM NECESSARY FOR THIS MESSAGE?
SET MACHINE ERROR CODE
EX 45
TT 16
SEND A PROPOSED DEPARTURE ICM TO THE ADJOINING CENTER.
PROPOSED DEPARTURE WITH THE CONTINUATION ROUTE ON HAND WHEN ORIGINAL STRIPS WERE PRINTED. RIDER STRIP HAS JUST BEEN PRINTED
RESTORE THE TAILORED CONTINUATION ROUTE TO ORIGINAL WORKING TRACK
RESTORE THE TAILORED ROUTE TO ITS ORIGINAL WORKING TRACK
PO 57
UTE FOR AN ENROUTE FLIGHT PLAN WAS ON OF THE ORIGINAL STRIPS WAS PRINTED. THE ST BEEN PRINTED.
SET P023b TO GET THE APREQ CODE
SET P046b TO TEST FOR CONTINUATION ROUTE
SET P041b TO BYPASS STRIP COUNTER
PO 6
A STRIP HAS JUST BEEN PRINTED AS REQUESTED BY A CONTROLLER THRU THE READOUT ROUTINE. TEST FOR CONTINUATION ROUTE AND RIDER.

2

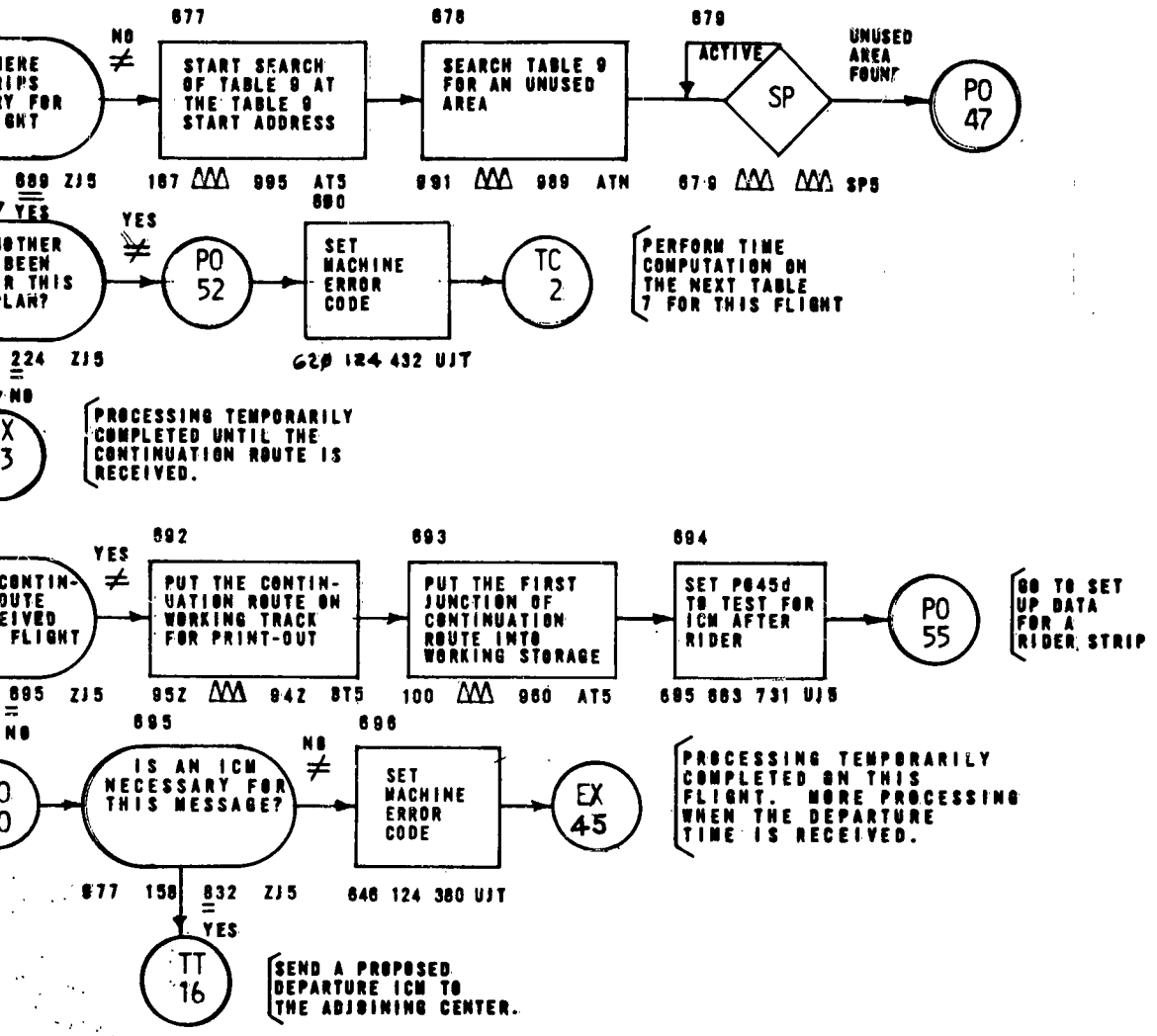
677
678
679
NO
START SEARCH OF TABLE 9 AT THE TABLE 9 START ADDRESS
SEARCH TABLE 9 FOR AN UNUSED AREA
ACTIVE
SP
UNUSED AREA FOUND
PO 47
689 ZJ5
187 995 AT5
991 989 ATN
679 SP5
YES
680
YES
PO 52
SET MACHINE ERROR CODE
TC 2
PERFORM TIME COMPUTATION ON THE NEXT TABLE 7 FOR THIS FLIGHT
224 ZJ5
620 124 432 UJT
NO
PROCESSING TEMPORARILY COMPLETED UNTIL THE CONTINUATION ROUTE IS RECEIVED.
692
693
694
YES
PUT THE CONTIN-UATION ROUTE ON WORKING TRACK FOR PRINT-OUT
PUT THE FIRST JUNCTION OF CONTINUATION ROUTE INTO WORKING STORAGE
SET P645d TO TEST FOR ICM AFTER RIDER
PO 55
GO TO SET UP DATA FOR A RIDER STRIP
695 ZJ5
952 942 BT5
100 960 AT5
695 663 731 UJ5
NO
695
696
NO
IS AN ICM NECESSARY FOR THIS MESSAGE?
SET MACHINE ERROR CODE
EX 45
PROCESSING TEMPORARILY COMPLETED ON THIS FLIGHT. MORE PROCESSING WHEN THE DEPARTURE TIME IS RECEIVED.
677 158 832 ZJ5
646 124 380 UJT
YES
TT 16
SEND A PROPOSED DEPARTURE ICM TO THE ADJOINING CENTER.

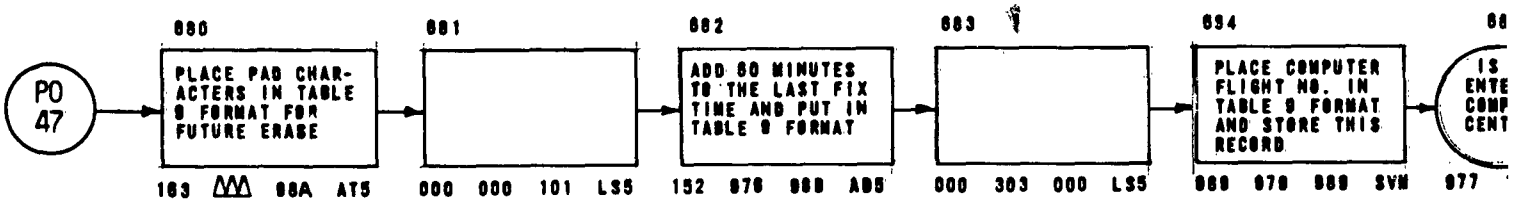

BUILD AND STORE A TABLE 9 RECORD FOR FUTURE ERASE OF ALL THIS FLIGHTS STORED DATA.

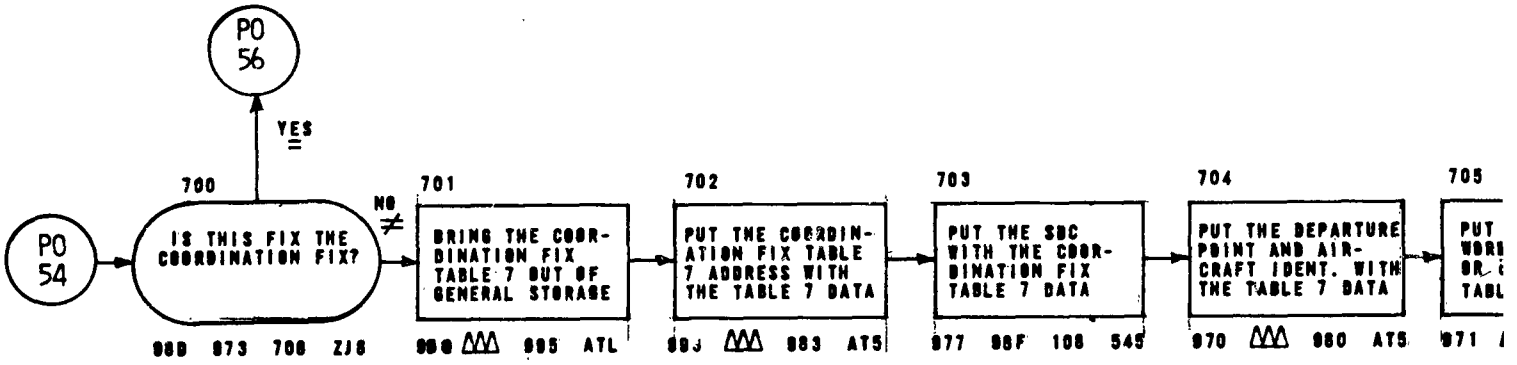

REPLACE THIS FIX DATA WITH THE COORDINATION FIX DATA FOR RIDER STRIP PRINT-OUT AND/OR ICM.

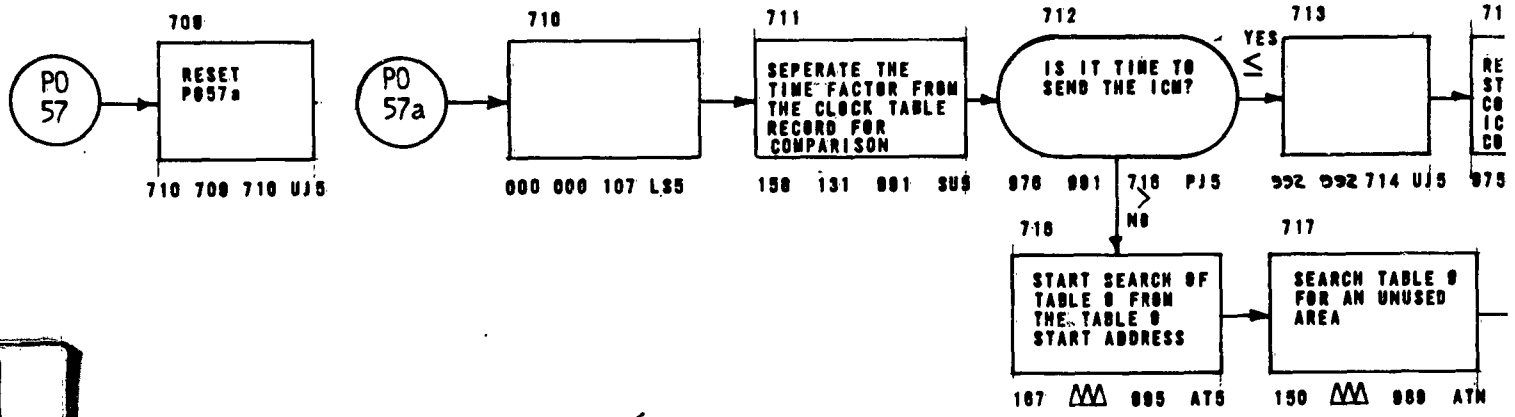

BUILD AND STORE A TA

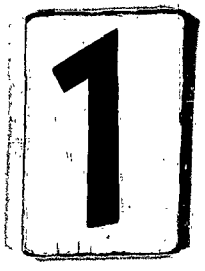

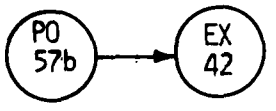

FLIGHT LEAVING THIS CENTER'S AREA BUT NOT ENTERING A COMPUTER EQUIPPED CENTER'S AREA. ALL STRIPS, INCLUDING RIDER STRIP WHEN CONTINUATION ROUTE WAS ON HAND AT THIS TIME, HAVE BEEN PRINTED.

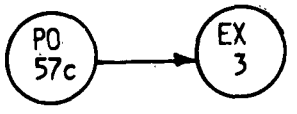

STRIP REQUESTED FOR REPRINT HAS BEEN PRINTED, INCLUDING A RIDER STRIP IF THE ROUTE HAD A CONTINUATION PORTION.

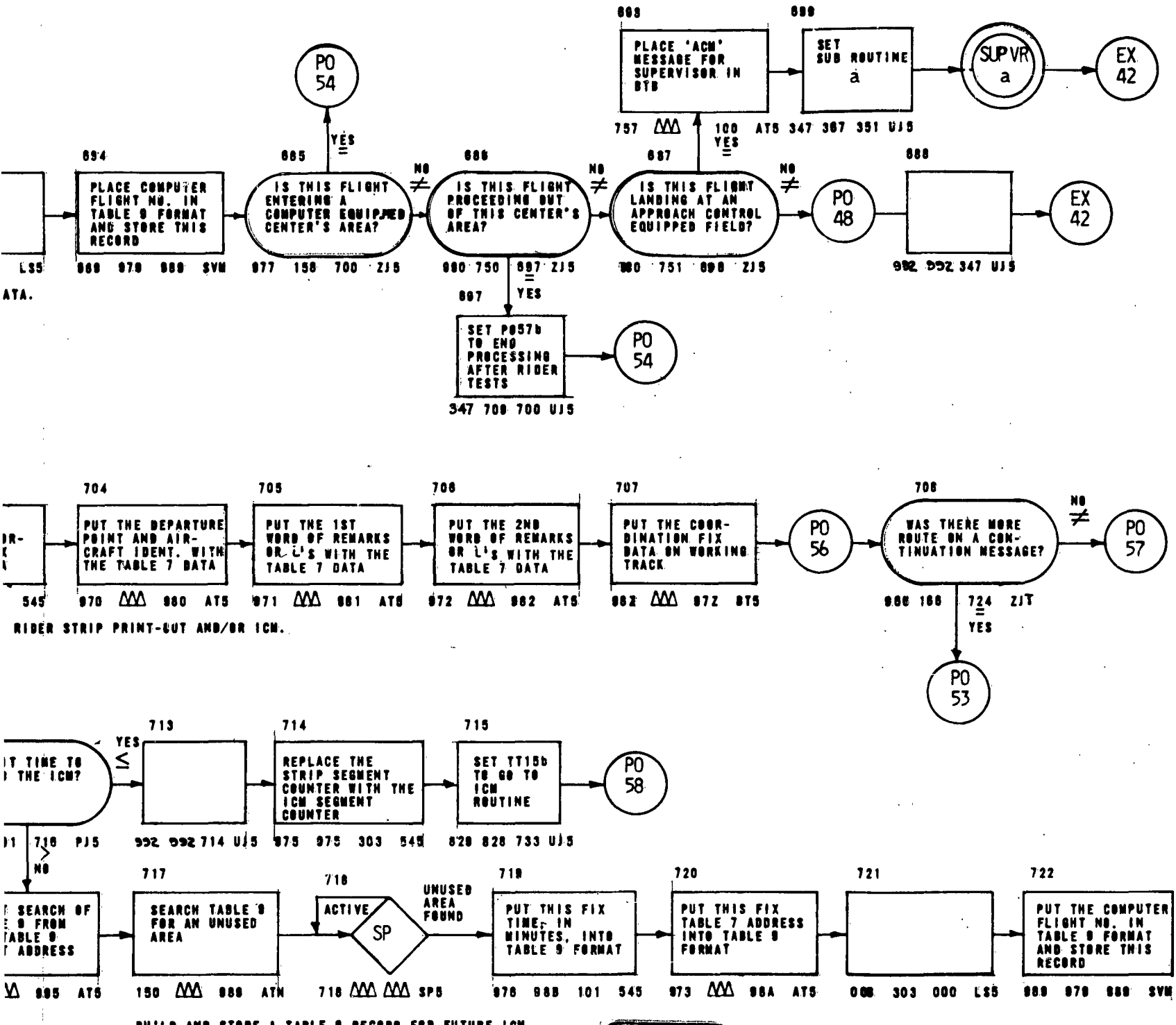
PLACE COMPUTER FLIGHT NO. IN TABLE 9 FORMAT AND STORE THIS RECORD
IS THIS FLIGHT ENTERING A COMPUTER EQUIPPED CENTER'S AREA?
YES
NO
PO 54
IS THIS FLIGHT PROCEEDING OUT OF THIS CENTER'S AREA?
NO
YES
SET P057b TO END PROCESSING AFTER RIDER TESTS
PO 54
IS THIS FLIGHT LANDING AT AN APPROACH CONTROL EQUIPPED FIELD?
YES
NO
PLACE 'ACM' MESSAGE FOR SUPERVISOR IN BTB
SET SUB ROUTINE a
SUPVR a
EX 42
PO 48
EX 42
PUT THE DEPARTURE POINT AND AIR-CRAFT IDENT. WITH THE TABLE 7 DATA
PUT THE 1ST WORD OF REMARKS OR L'S WITH THE TABLE 7 DATA
PUT THE 2ND WORD OF REMARKS OR L'S WITH THE TABLE 7 DATA
PUT THE COOR-DINATION FIX DATA ON WORKING TRACK
PO 56
WAS THERE MORE ROUTE ON A CON-TINUATION MESSAGE?
NO
PO 57
YES
PO 53
RIDER STRIP PRINT-OUT AND/OR ICM.
YES
REPLACE THE STRIP SEGMENT COUNTER WITH THE ICM SEGMENT COUNTER
SET TT15b TO GO TO ICM ROUTINE
PO 58
NO
SEARCH TABLE 9 FOR AN UNUSED AREA
ACTIVE
SP
UNUSED AREA FOUND
PUT THIS FIX TIME, IN MINUTES, INTO TABLE 9 FORMAT
PUT THIS FIX TABLE 7 ADDRESS INTO TABLE 9 FORMAT
PUT THE COMPUTER FLIGHT NO. IN TABLE 9 FORMAT AND STORE THIS RECORD
BUILD AND STORE A TABLE 9 RECORD FOR FUTURE ICM.

2

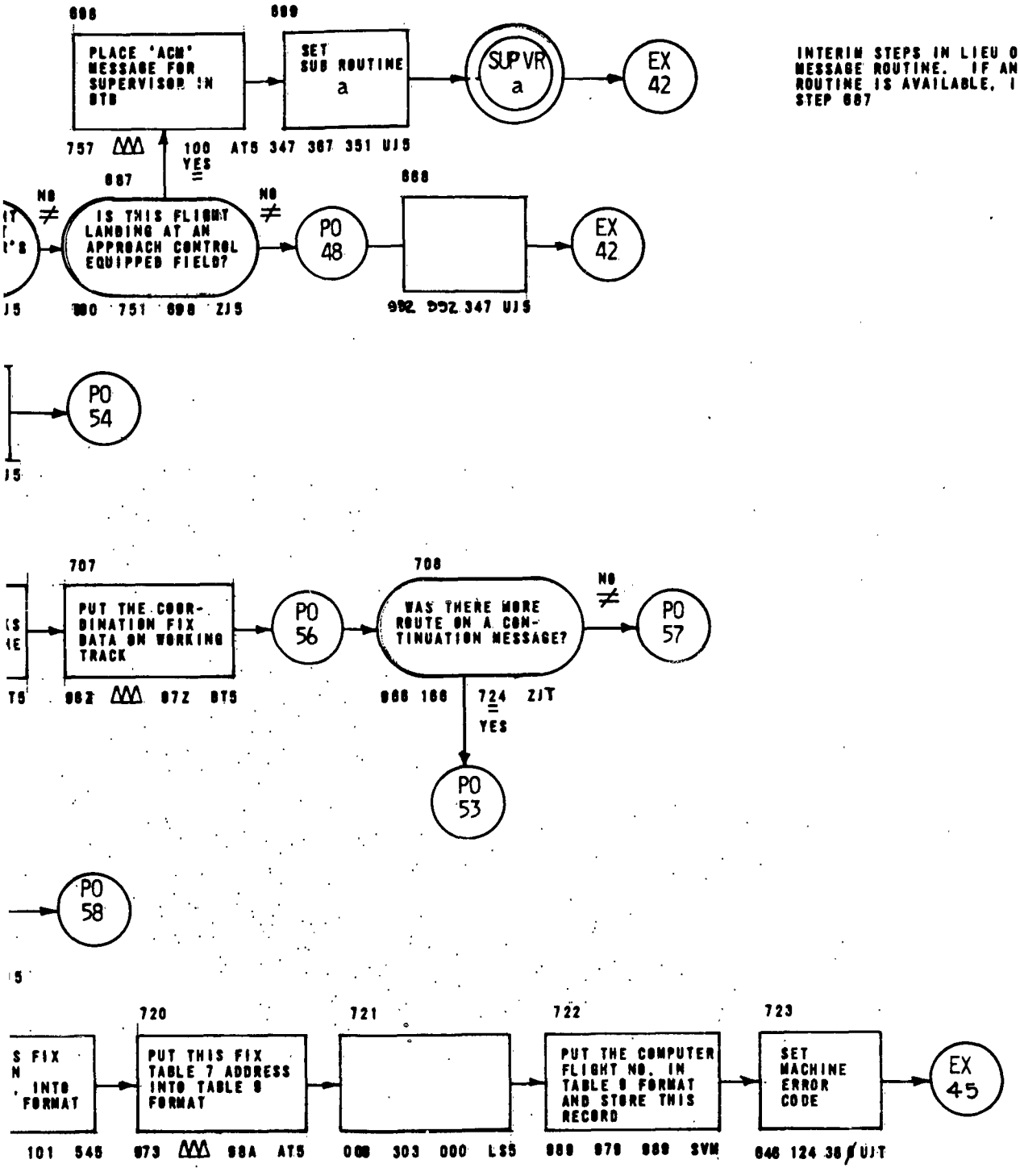

INTERIM STEPS IN LIEU OF AN APROACH CONTROL MESSAGE ROUTINE. IF AN APPROACH CONTROL MESSAGE ROUTINE IS AVAILABLE, IT WOULD BE ENTERED FROM STEP 687

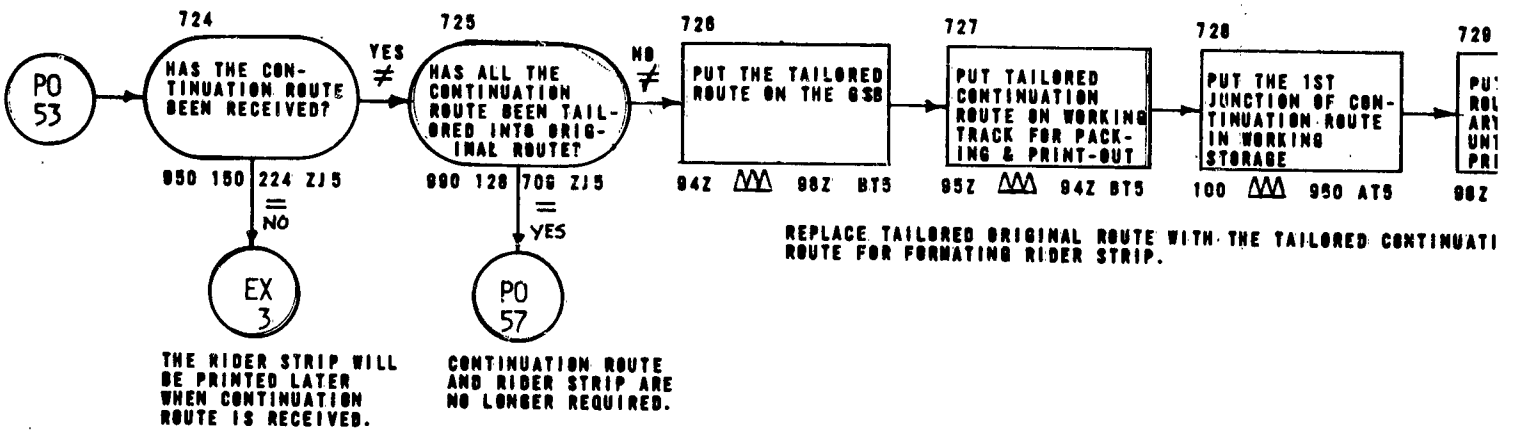

REPLACE TAILORED ORIGINAL ROUTE WITH THE TAILORED CONTINUATI
ROUTE FOR FORMATING RIDER STRIP.

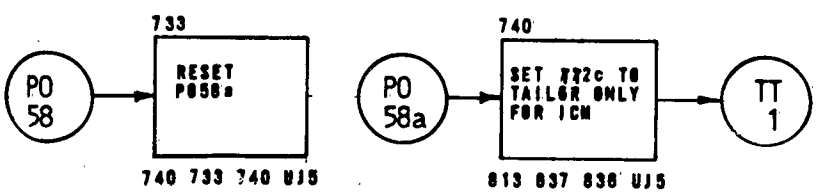

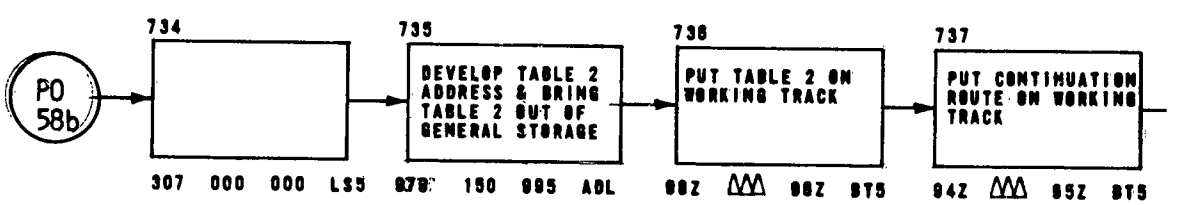

CONTINUATION ROUTE RECEIVED AFTER ALL ORIGINAL STRIPS HAD BEEN PRINTED WITHOUT THE CONTINUATION ROUTE PORTION. THE RIDER STRIP WAS JUST PRINTED WITH ALL OF THE CONTINUATION ROUTE PORTION. BOTH ROUTES MUST NOW BE TAILORED TOGETHER FOR ICM.

1

727 PUT TAILORED CONTINUATION ROUTE ON WORKING TRACK FOR PACKING & PRINT-OUT

95Z 94Z BT5

728 PUT THE 1ST JUNCTION OF CONTINUATION ROUTE IN WORKING STORAGE

100 960 AT5

729 PUT THE TAILORED ROUTE IN TEMPORARY STORAGE UNTIL RIDER IS PRINTED

98Z 95Z BT5

730 SET P045a TO RESTORE ROUTE TO ORIGINAL TRACKS

689 683 731 UJ5

PO 55

731 SET P09b TO BYPASS DATA NOT NEEDED

530 502 732 UJ5

732 SET P041b TO BYPASS STRIP COUNTER

651 649 498 UJ5

PO 6

LORED ORIGINAL ROUTE WITH THE TAILORED CONTINUATION
ORMATING RIDER STRIP.

2 NG F GE

ADL

736 PUT TABLE 2 ON WORKING TRACK

98Z 96Z BT5

737 PUT CONTINUATION ROUTE ON WORKING TRACK

94Z 95Z BT5

738 PLACE SPACES AT END OF CONTINUATION ROUTE FOR TAILORING

747 958 AT5

739 SET TT2d TO GET REMARKS, DO TIME CONV. AND TAILORING

798 837 836 UJ5

TT 1

AL STRIPS HAD BEEN PRINTED WITHOUT THE
WAS JUST PRINTED WITH ALL OF THE CONTINUATION
ORED TOGETHER FOR ICM.

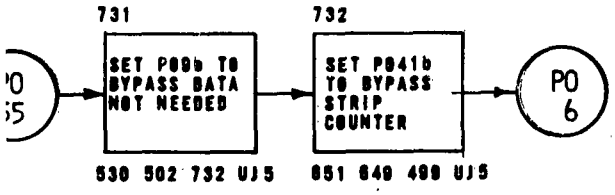
731
732
SET P09b TO BYPASS DATA NOT NEEDED
SET P041b TO BYPASS STRIP COUNTER
PO 6
530 502 732 UJ5
851 649 498 UJ5

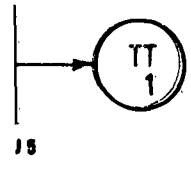
TT 1

3

128	Δ	Δ	Δ	Δ	Δ	Δ	Δ	Δ	Δ	Δ	1	Δ	1 constant.
131	X	X	X	X	X	X	Ø	Ø	Ø	Ø	Ø	Ø	The current Clock Table record for this ten minute period.
136	-not used —					r	X	X	X	X	X	r	Strips printed counter.
15Ø	Δ	Δ	Δ	Δ	Δ	Δ	Δ	Δ	Δ	Δ	Δ	Δ	Spaces comparator.
152	Ø	Ø	Ø	Ø	Ø	Ø	Ø	Ø	Ø	6	Ø	Ø	Time update constant.
158	i	Z	⊥	i	i	i	i	i	i	i	i	i	SDC comparator.
163	i	i	i	i	i	i	i	·	·	·	·	i	Pads constant.
166	i	i	i	i	i	C	T	T	Y	i	i	i	Continuation route comparator.
167	Δ	Δ	Δ	Δ	1	1	2	2	Ø	Ø	Ø	Δ	Table 9 starting address.
747	·	·	Δ	Δ	Δ	Δ	Δ	Δ	Δ	Δ	Δ	Δ	Route fill constant.
748	i	i	i	i	i	i	i	i	i	i	P	i	Print constant.
749	i	i	i	i	i	i	i	i	i	1	i	i	Duplicate strip comparator and update constant.
75Ø	O	V	E	R	i	i	i	i	i	i	i	i	OVER comparator.
752	Δ	Δ	Δ	Δ	i	i	i	i	i	i	?	i	Color code comparator.
753	i	i	·	i	i	i	i	i	i	i	i	i	Coordination fix comparator.
754	i	i	i	i	i	i	i	i	C	T	T	Y	Continuation route comparator.
755	P	i	i	i	i	i	i	i	i	i	i	i	Proposed comparator.
756	i	i	i	i	i	i	i	i	Δ	Δ	Δ	Δ	End of route comparator.

The remarks beside the above constants and factors define the prime purpose as used in this routine. The flow charts will define any secondary usage of these locations.

APPENDIX XI

INTERCENTER MESSAGE ROUTINE

LINE NO.

1.

2.

3.

4.

5.

6.

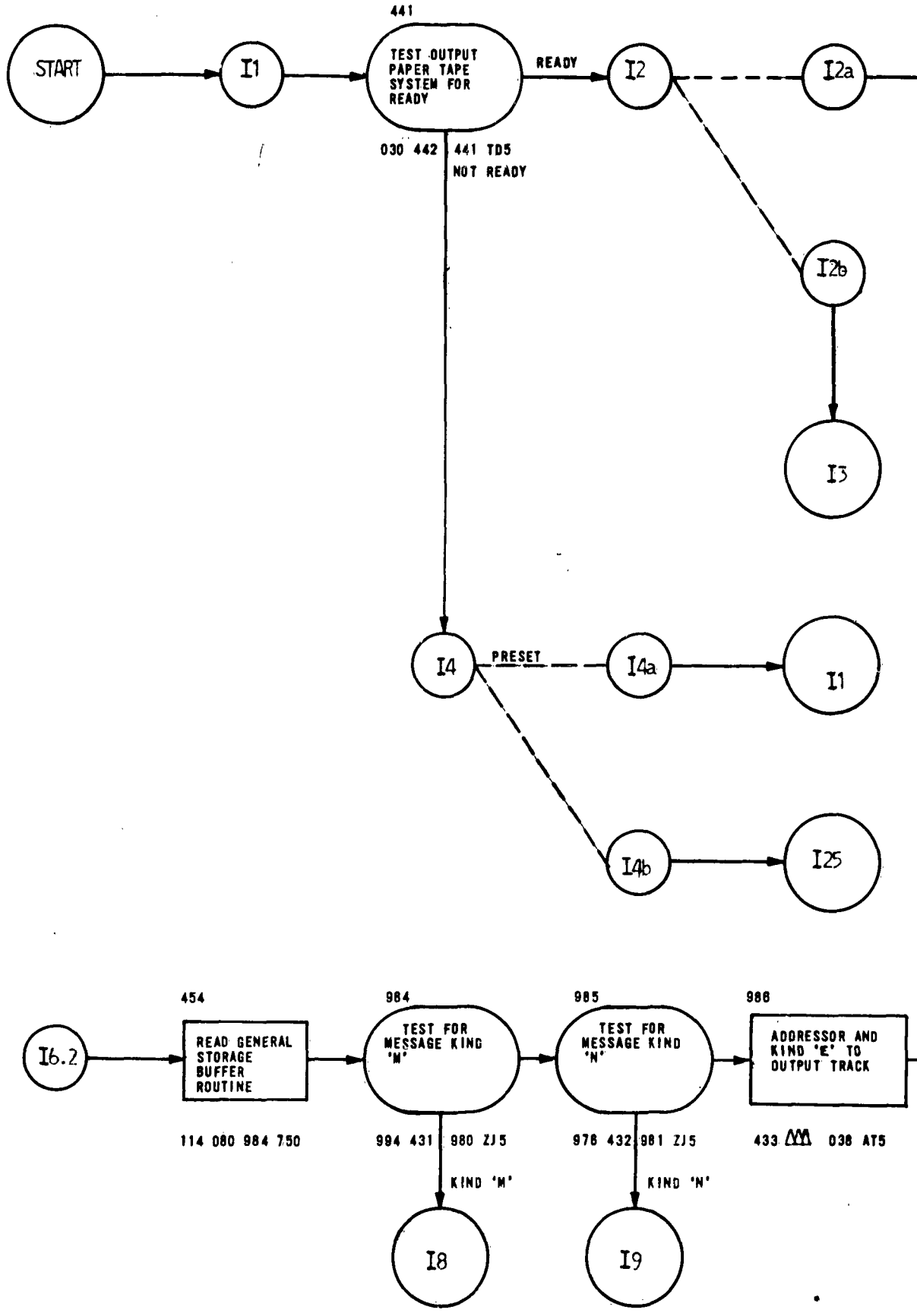

1

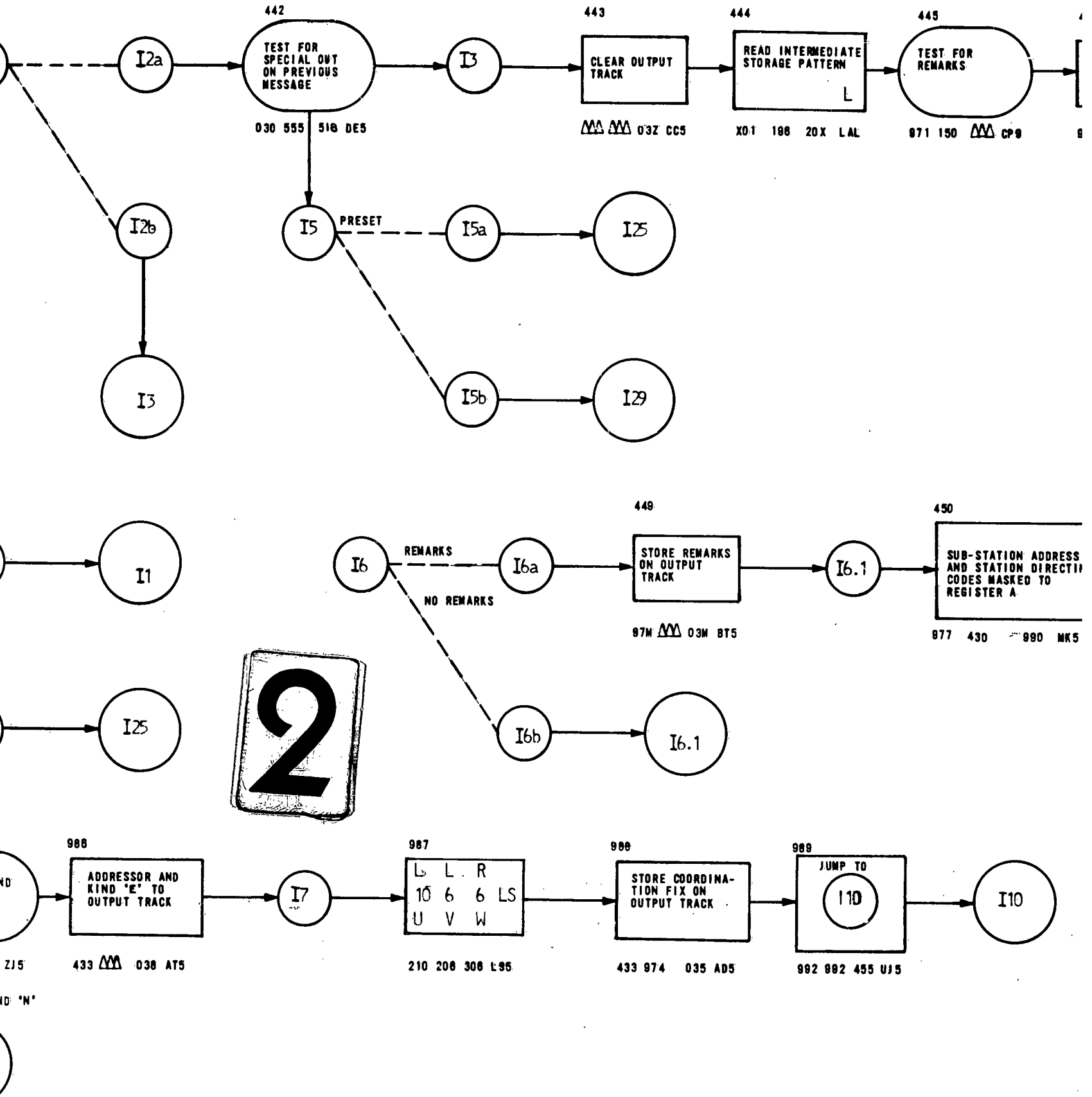
442
TEST FOR SPECIAL OUT ON PREVIOUS MESSAGE
030 555 518 DE5
I2a
I2b
I3
I5
PRESET
I5a
I25
I5b
I29
443
CLEAR OUTPUT TRACK
03Z CC5
444
READ INTERMEDIATE STORAGE PATTERN
L
X01 186 20X LAL
445
TEST FOR REMARKS
971 150 CP9
I1
I25
I6
REMARKS
I6a
NO REMARKS
I6b
449
STORE REMARKS ON OUTPUT TRACK
97M 03M BT5
I6.1
450
SUB-STATION ADDRESS AND STATION DIRECTI CODES MASKED TO REGISTER A
977 430 990 MK5
2
986
ADDRESSOR AND KIND 'E' TO OUTPUT TRACK
433 038 AT5
I7
987
L L R
10 6 6 LS
U V W
210 206 306 LS5
988
STORE COORDINATION FIX ON OUTPUT TRACK
433 974 035 AD5
989
JUMP TO
I10
992 992 455 UJ5
I10

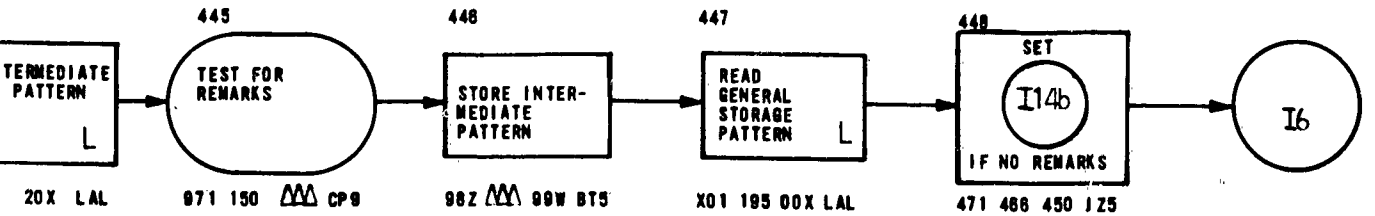
TERMEDIATE PATTERN
L
20X LAL
445
TEST FOR REMARKS
971 150 CP9
446
STORE INTER-MEDIATE PATTERN
98Z 99W BT5
447
READ GENERAL STORAGE PATTERN
L
X01 195 00X LAL
448
SET
I14b
IF NO REMARKS
471 466 450 JZ5
I6

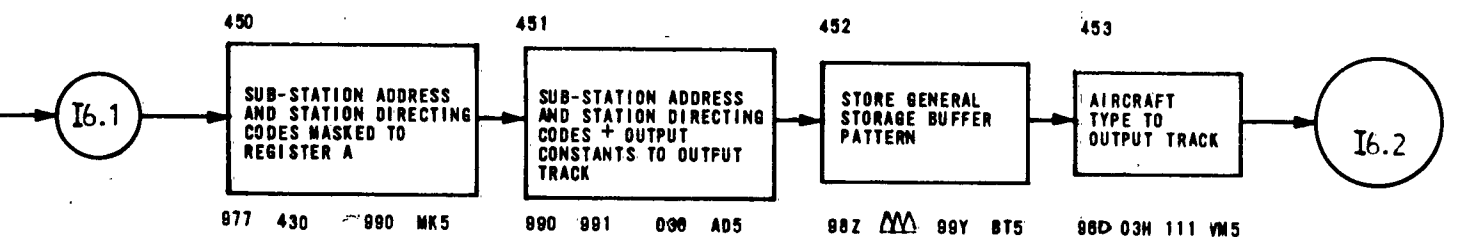
I6.1
450
SUB-STATION ADDRESS AND STATION DIRECTING CODES MASKED TO REGISTER A
977 430 990 MK5
451
SUB-STATION ADDRESS AND STATION DIRECTING CODES + OUTPUT CONSTANTS TO OUTPUT TRACK
990 991 096 AD5
452
STORE GENERAL STORAGE BUFFER PATTERN
98Z 99Y BT5
453
AIRCRAFT TYPE TO OUTPUT TRACK
98D 03H 111 VM5
I6.2

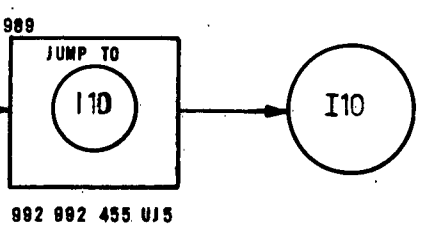
989
JUMP TO
I10
992 992 455 UJ5
I10

3

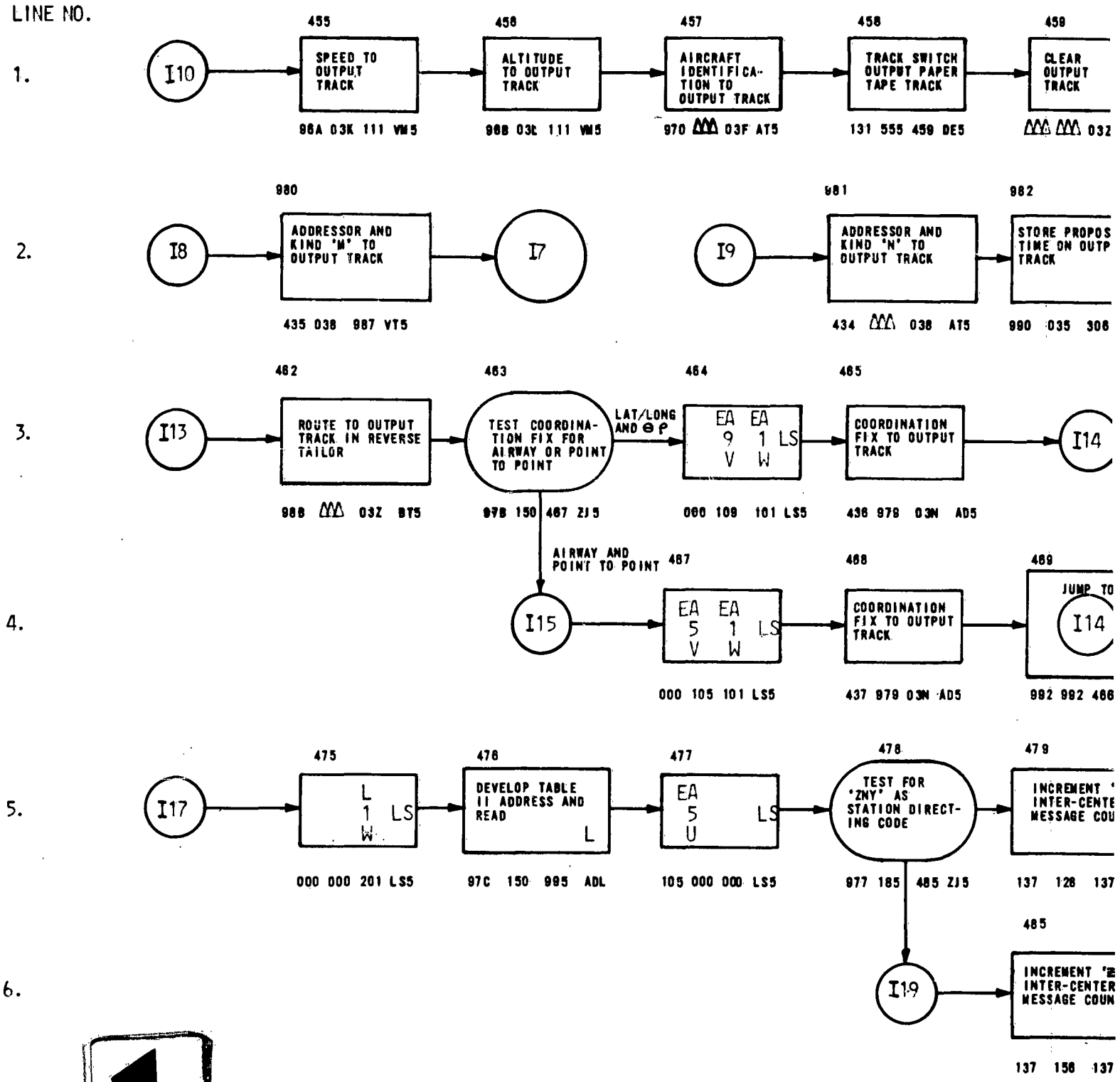
LINE NO.
1.
I10
455
SPEED TO OUTPUT TRACK
96A 03K 111 VM5
456
ALTITUDE TO OUTPUT TRACK
96B 03L 111 VM5
457
AIRCRAFT IDENTIFICATION TO OUTPUT TRACK
970 03F AT5
458
TRACK SWITCH OUTPUT PAPER TAPE TRACK
131 555 459 DE5
459
CLEAR OUTPUT TRACK
032
2.
I8
980
ADDRESSOR AND KIND 'M' TO OUTPUT TRACK
435 038 987 VT5
I7
I9
981
ADDRESSOR AND KIND 'N' TO OUTPUT TRACK
434 038 AT5
982
STORE PROPOS TIME ON OUTP TRACK
990 035 306
3.
I13
462
ROUTE TO OUTPUT TRACK IN REVERSE TAILOR
988 03Z BT5
463
TEST COORDINATION FIX FOR AIRWAY OR POINT TO POINT
978 150 467 ZJ5
LAT/LONG AND θ ρ
464
EA 9 V
EA 1 W
LS
000 109 101 LS5
465
COORDINATION FIX TO OUTPUT TRACK
436 979 03N AD5
I14
AIRWAY AND POINT TO POINT
4.
I15
467
EA 5 V
EA 1 W
LS
000 105 101 LS5
468
COORDINATION FIX TO OUTPUT TRACK
437 979 03N AD5
469
JUMP TO
I14
992 992 466
5.
I17
475
L 1 W
LS
000 000 201 LS5
476
DEVELOP TABLE II ADDRESS AND READ
L
97C 150 995 ADL
477
EA 5 U
LS
105 000 000 LS5
478
TEST FOR 'ZNY' AS STATION DIRECTING CODE
977 185 485 ZJ5
479
INCREMENT INTER-CENTE MESSAGE COU
137 126 137
6.
I19
485
INCREMENT INTER-CENTER MESSAGE COUN
137 156 137

1

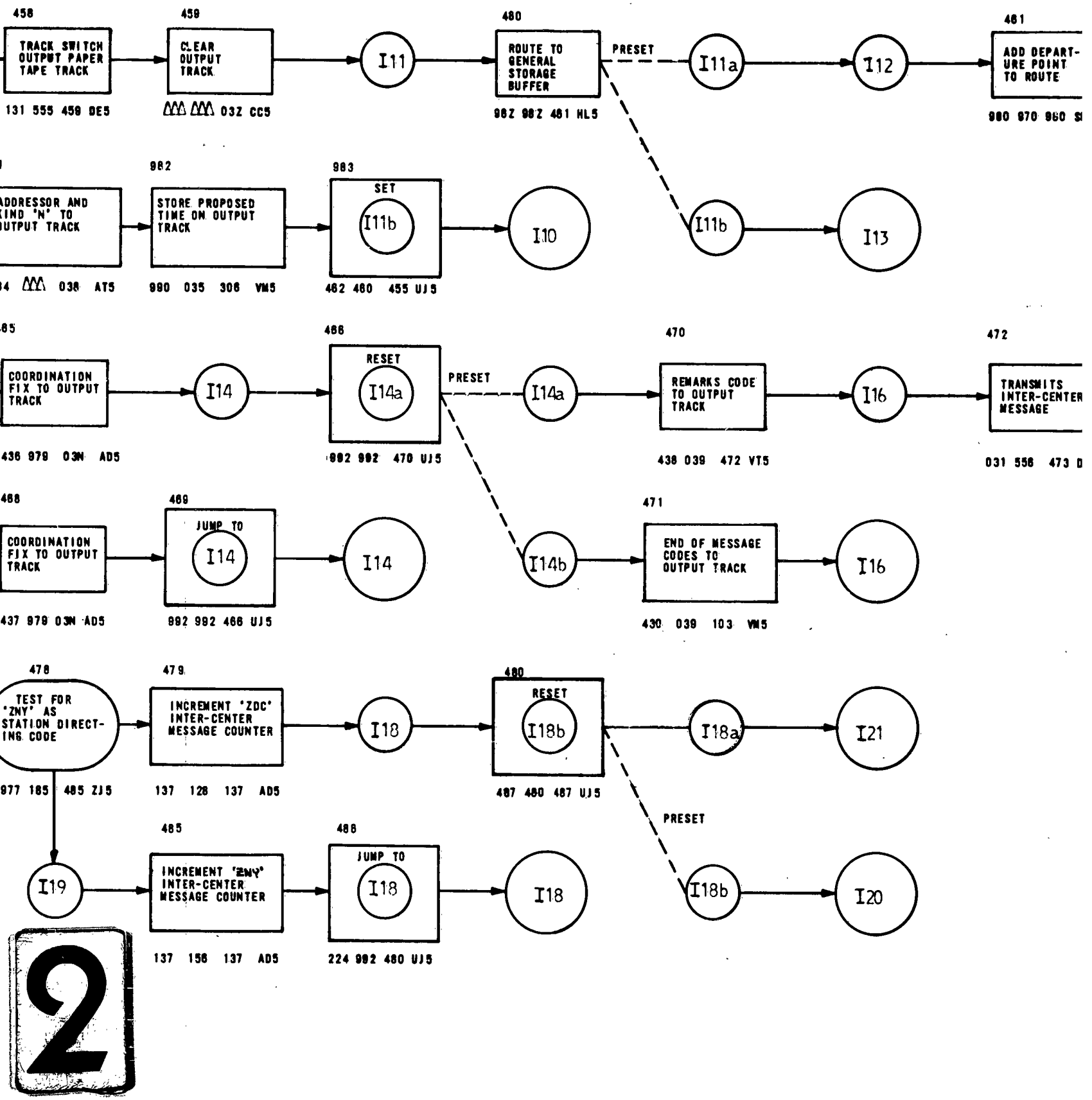
458
TRACK SWITCH OUTPUT PAPER TAPE TRACK
131 555 459 DE5
459
CLEAR OUTPUT TRACK
03Z CC5
I11
480
ROUTE TO GENERAL STORAGE BUFFER
98Z 98Z 481 HL5
PRESET
I11a
I12
461
ADD DEPARTURE POINT TO ROUTE
980 970 960
ADDRESSOR AND KIND 'N' TO OUTPUT TRACK
038 AT5
982
STORE PROPOSED TIME ON OUTPUT TRACK
990 035 306 VM5
983
SET
I11b
462 460 455 UJ5
I10
I11b
I13
COORDINATION FIX TO OUTPUT TRACK
436 979 03N AD5
I14
466
RESET
I14a
992 992 470 UJ5
PRESET
I14a
470
REMARKS CODE TO OUTPUT TRACK
438 039 472 VT5
I16
472
TRANSMITS INTER-CENTER MESSAGE
031 556 473
468
COORDINATION FIX TO OUTPUT TRACK
437 979 03N AD5
469
JUMP TO
I14
992 992 466 UJ5
I14
I14b
471
END OF MESSAGE CODES TO OUTPUT TRACK
430 039 103 VM5
I16
478
TEST FOR 'ZNY' AS STATION DIRECTING CODE
977 185 485 ZJ5
479
INCREMENT 'ZDC' INTER-CENTER MESSAGE COUNTER
137 128 137 AD5
I18
480
RESET
I18b
487 480 487 UJ5
I18a
I21
PRESET
I18b
I20
I19
485
INCREMENT 'ZNY' INTER-CENTER MESSAGE COUNTER
137 156 137 AD5
486
JUMP TO
I18
224 992 480 UJ5
I18

2

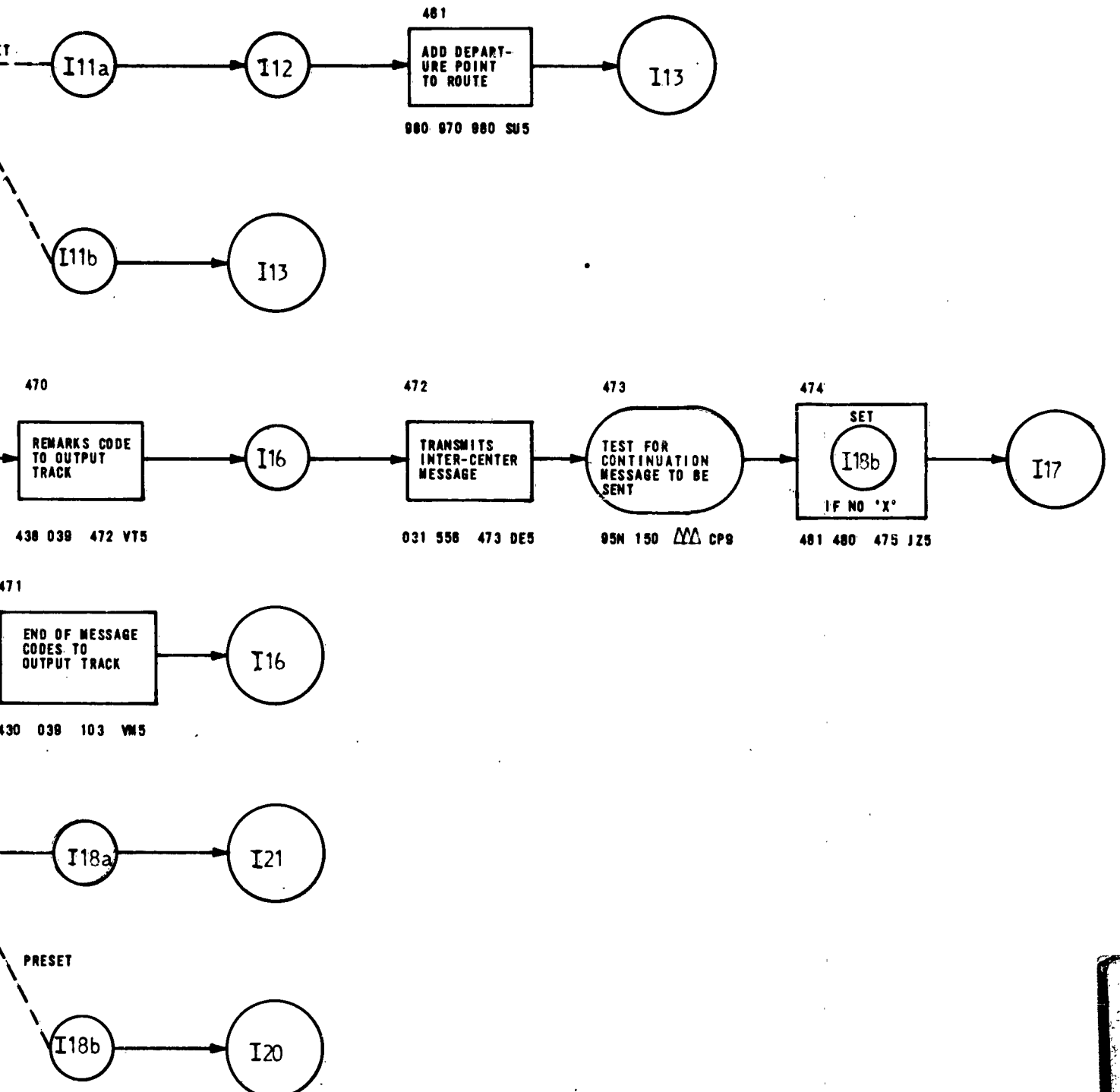
I11a
I12
461
ADD DEPART-
URE POINT
TO ROUTE
980 970 980 SU5
I13
I11b
I13
470
REMARKS CODE
TO OUTPUT
TRACK
438 039 472 VT5
I16
472
TRANSMITS
INTER-CENTER
MESSAGE
031 558 473 DE5
473
TEST FOR
CONTINUATION
MESSAGE TO BE
SENT
95N 150 CP9
474
SET
I18b
IF NO 'X'
481 480 475 JZ5
I17
471
END OF MESSAGE
CODES TO
OUTPUT TRACK
430 039 103 VM5
I16
I18a
I21
PRESET
I18b
I20

LINE NO.

1.

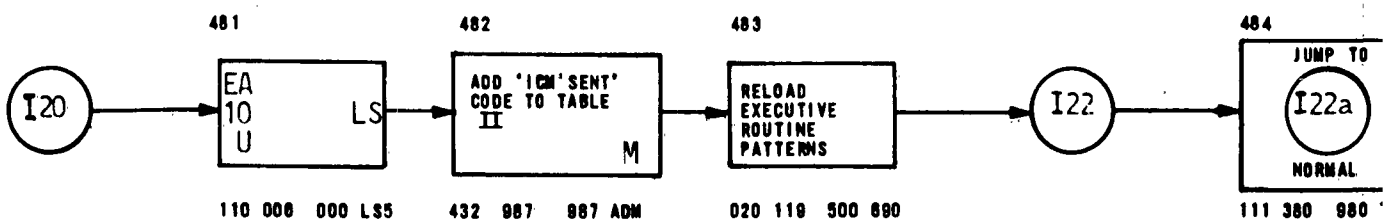

2.

3.

4.

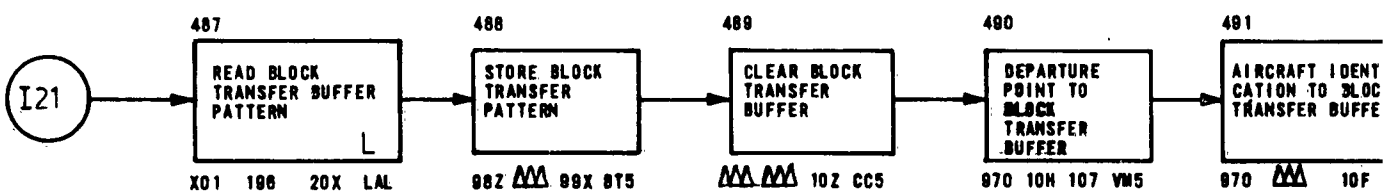

5.

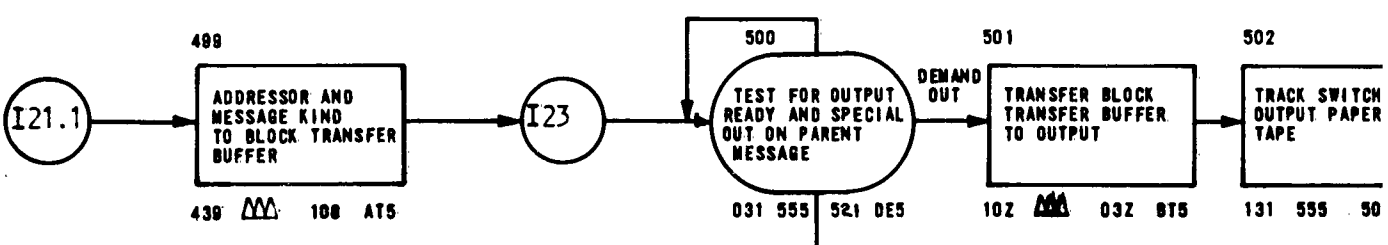

6.

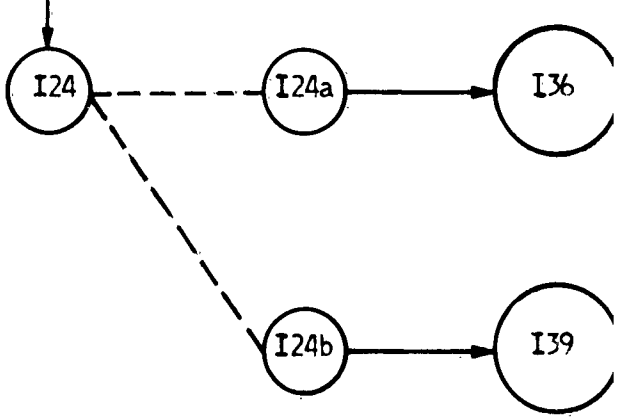

7.

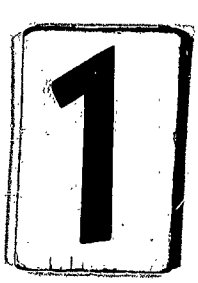

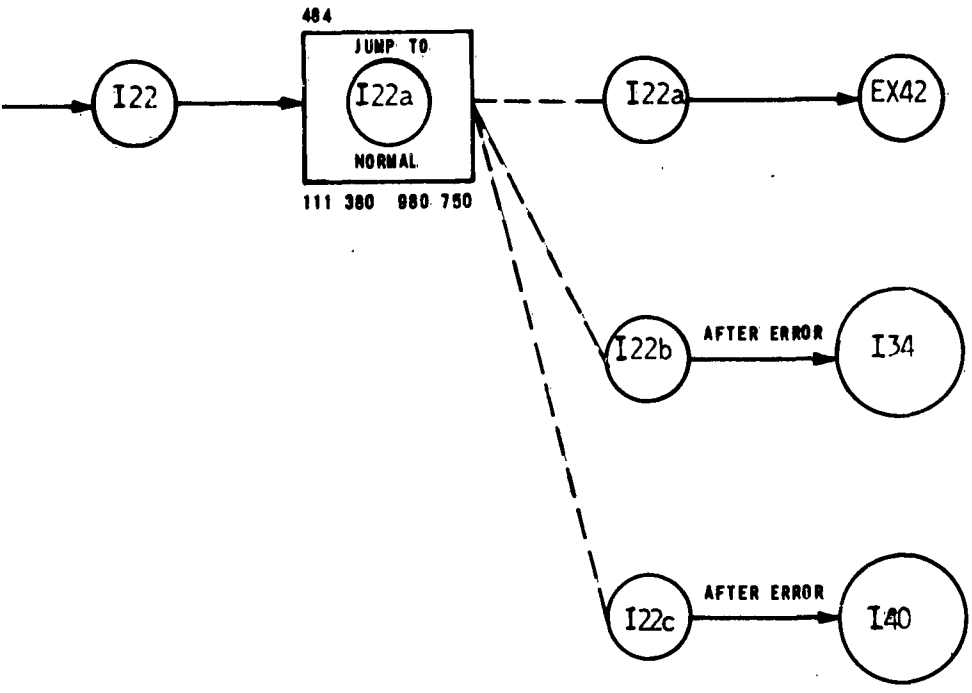
484
JUMP TO
I22a
NORMAL
111 380 980 750
I22
I22a
EX42
I22b
AFTER ERROR
I34
I22c
AFTER ERROR
I40

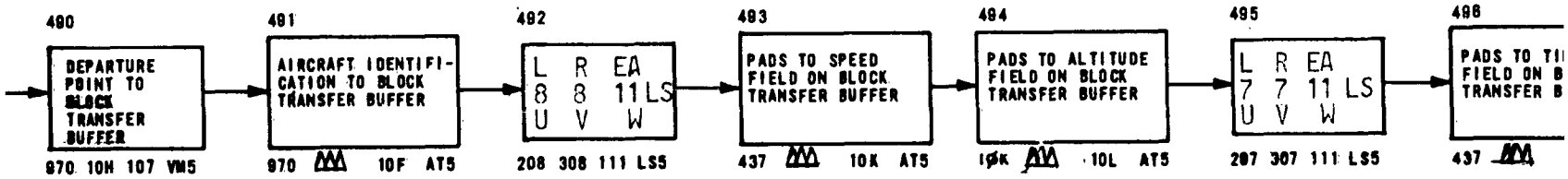
490
DEPARTURE POINT TO BLOCK TRANSFER BUFFER
970 10H 107 VM5
491
AIRCRAFT IDENTIFICATION TO BLOCK TRANSFER BUFFER
970 10F AT5
492
L R EA
8 8 11 LS
U V W
208 308 111 LS5
493
PADS TO SPEED FIELD ON BLOCK TRANSFER BUFFER
437 10K AT5
494
PADS TO ALTITUDE FIELD ON BLOCK TRANSFER BUFFER
10K 10L AT5
495
L R EA
7 7 11 LS
U V W
207 307 111 LS5
496
437

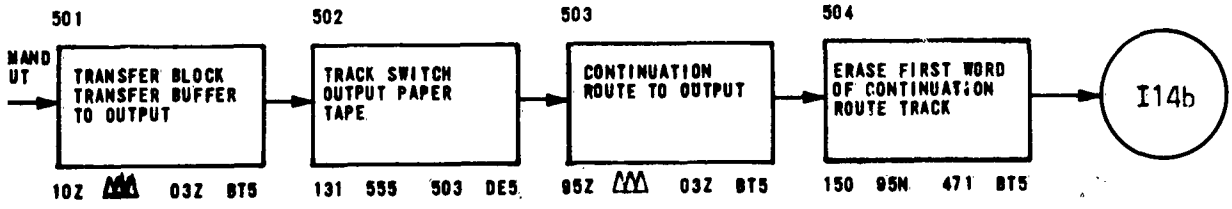
501
MAND
UT
TRANSFER BLOCK TRANSFER BUFFER TO OUTPUT
10Z 03Z BT5
502
TRACK SWITCH OUTPUT PAPER TAPE
131 555 503 DE5
503
CONTINUATION ROUTE TO OUTPUT
95Z 03Z BT5
504
ERASE FIRST WORD OF CONTINUATION ROUTE TRACK
150 95N 471 BT5
I14b

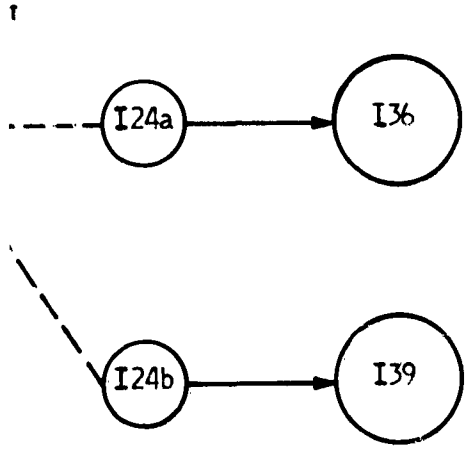
I24a
I36
I24b
I39

2

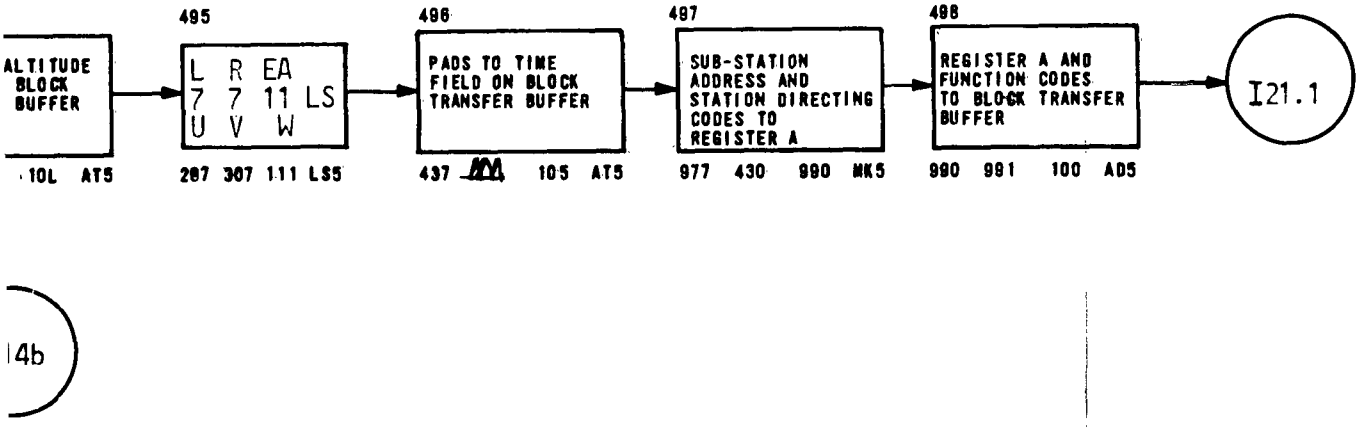
ALTITUDE BLOCK BUFFER
10L AT5
495
L R EA
7 7 11 LS
U V W
287 307 111 LS5
496
PADS TO TIME FIELD ON BLOCK TRANSFER BUFFER
437 105 AT5
497
SUB-STATION ADDRESS AND STATION DIRECTING CODES TO REGISTER A
977 430 990 MK5
498
REGISTER A AND FUNCTION CODES TO BLOCK TRANSFER BUFFER
990 991 100 AD5
I21.1
14b

LINE NO.

1.

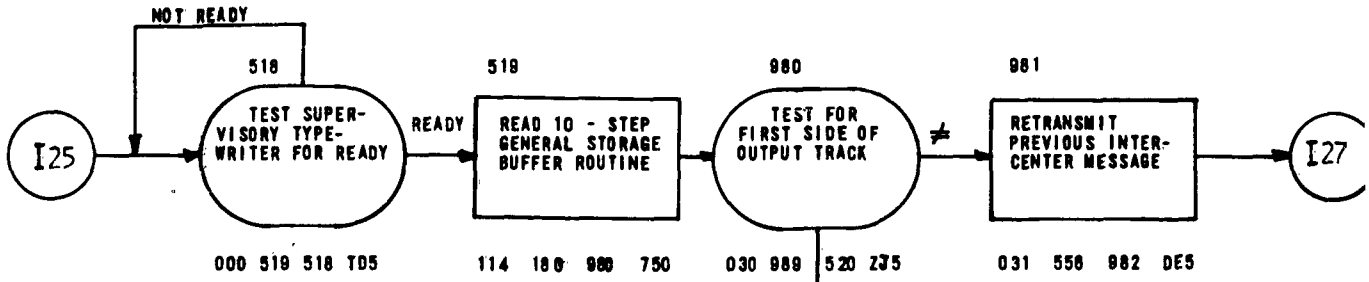

2.

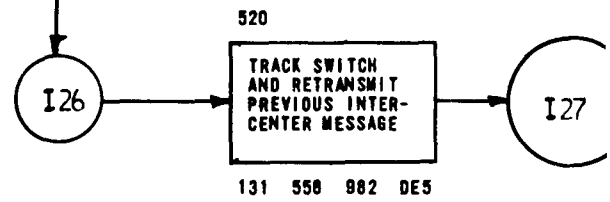

3.

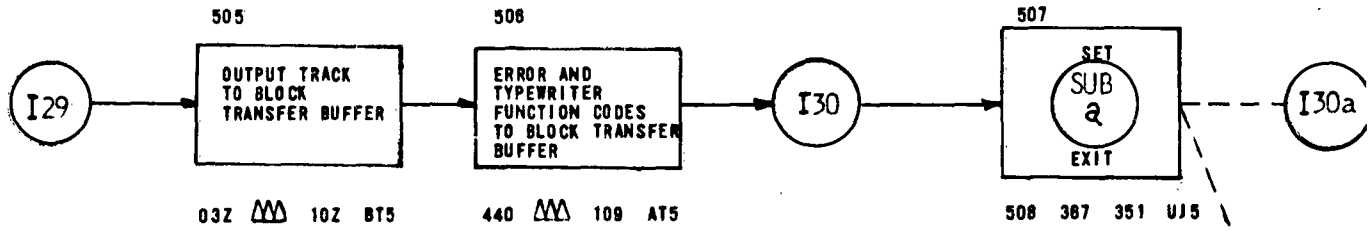

4.

5.

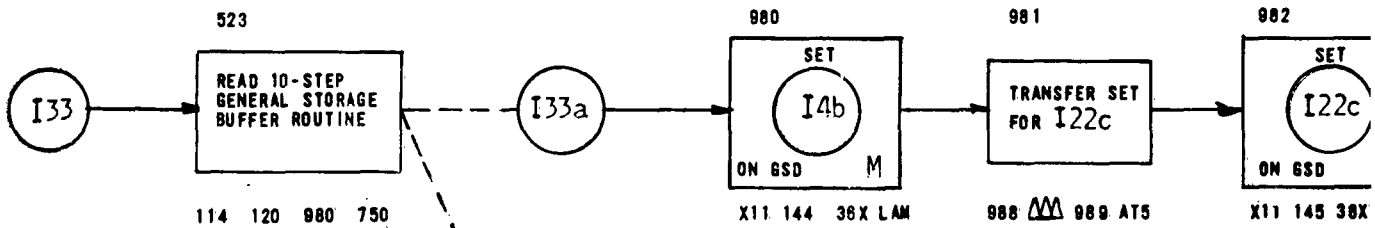

6.

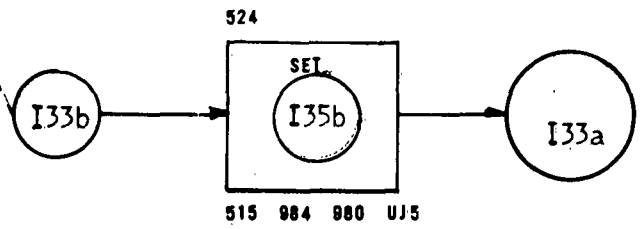

1

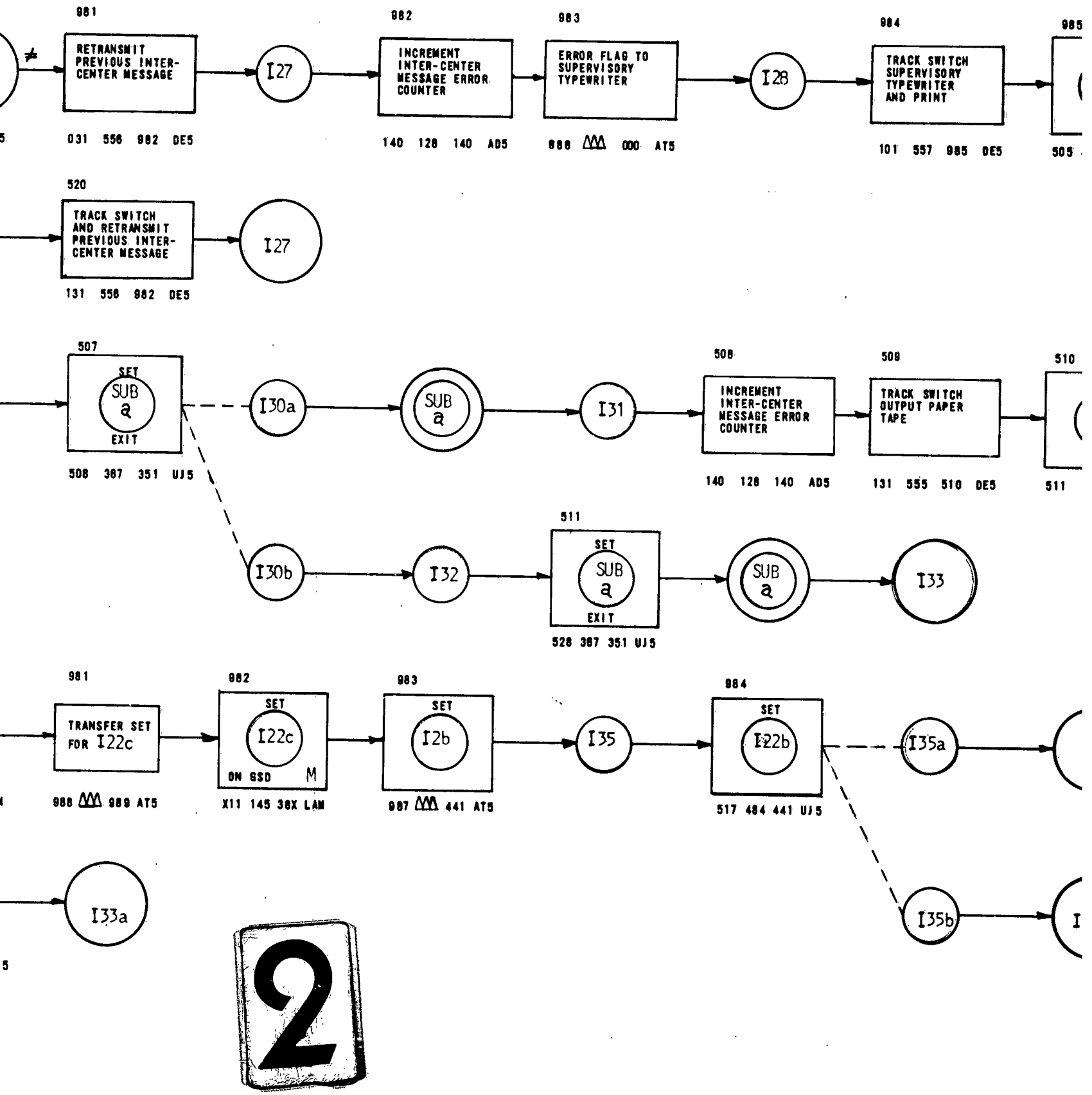
981
RETRANSMIT PREVIOUS INTER-CENTER MESSAGE
031 556 982 DE5
I27
982
INCREMENT INTER-CENTER MESSAGE ERROR COUNTER
140 128 140 AD5
983
ERROR FLAG TO SUPERVISORY TYPEWRITER
988 000 AT5
I28
984
TRACK SWITCH SUPERVISORY TYPEWRITER AND PRINT
101 557 985 DE5
520
TRACK SWITCH AND RETRANSMIT PREVIOUS INTER-CENTER MESSAGE
131 556 982 DE5
I27
507
SET
SUB a
EXIT
508 367 351 UJ5
I30a
SUB a
I31
508
INCREMENT INTER-CENTER MESSAGE ERROR COUNTER
140 128 140 AD5
509
TRACK SWITCH OUTPUT PAPER TAPE
131 555 510 DE5
510
511
I30b
I32
511
SET
SUB a
EXIT
528 367 351 UJ5
SUB a
I33
981
TRANSFER SET FOR I22c
988 989 AT5
982
SET
I22c
ON GSD M
X11 145 38X LAM
983
SET
I2b
987 441 AT5
I35
984
SET
I22b
517 484 441 UJ5
I35a
I33a
I35b

2

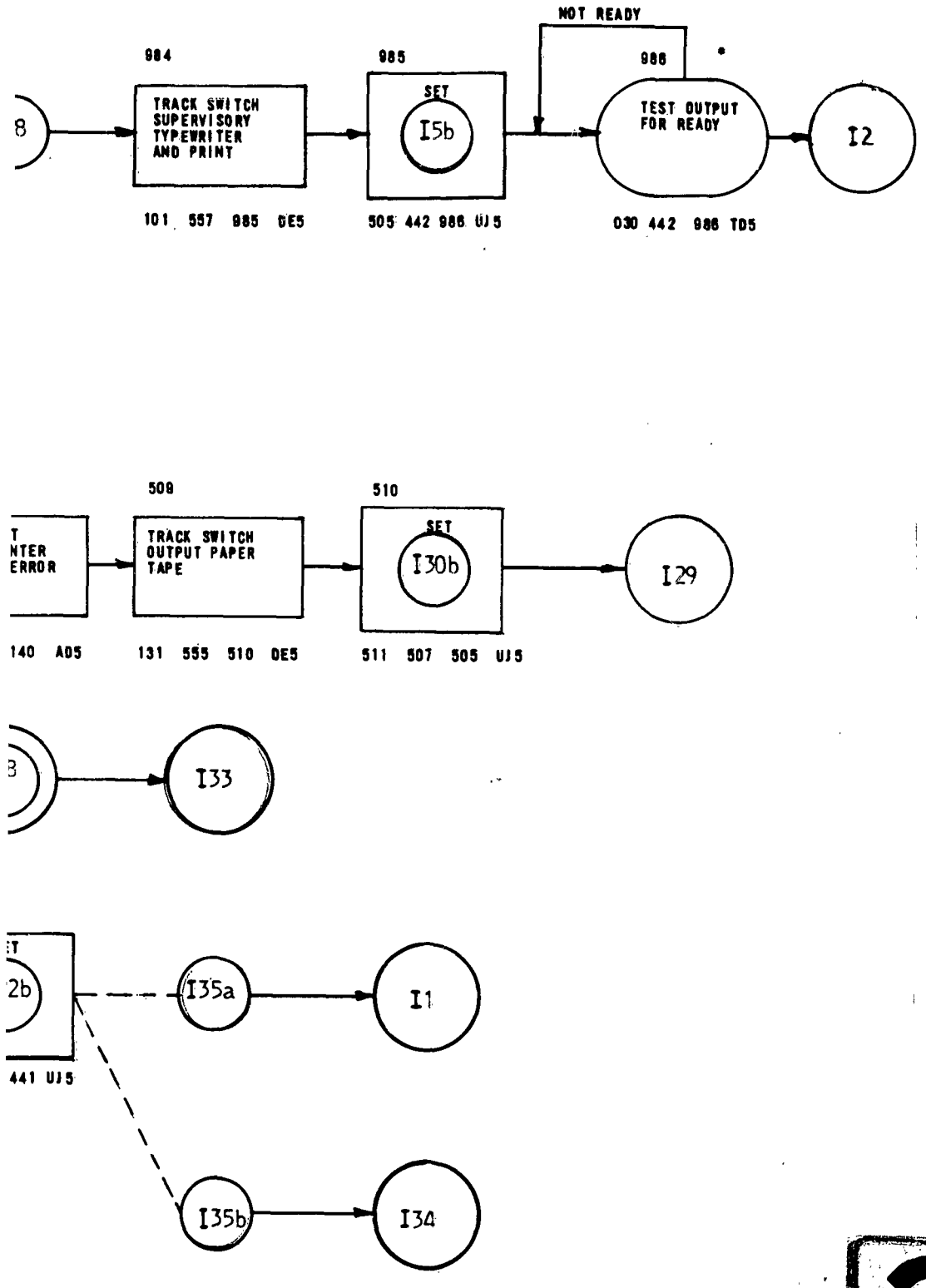
NOT READY
984
985
986
8
TRACK SWITCH SUPERVISORY TYPEWRITER AND PRINT
SET
I5b
TEST OUTPUT FOR READY
I2
101 557 985 DE5
505 442 986 UJ5
030 442 986 TD5
509
510
T
NTER
ERROR
TRACK SWITCH OUTPUT PAPER TAPE
SET
I30b
I29
140 AD5
131 555 510 DE5
511 507 505 UJ5
3
I33
T
2b
I35a
I1
441 UJ5
I35b
I34

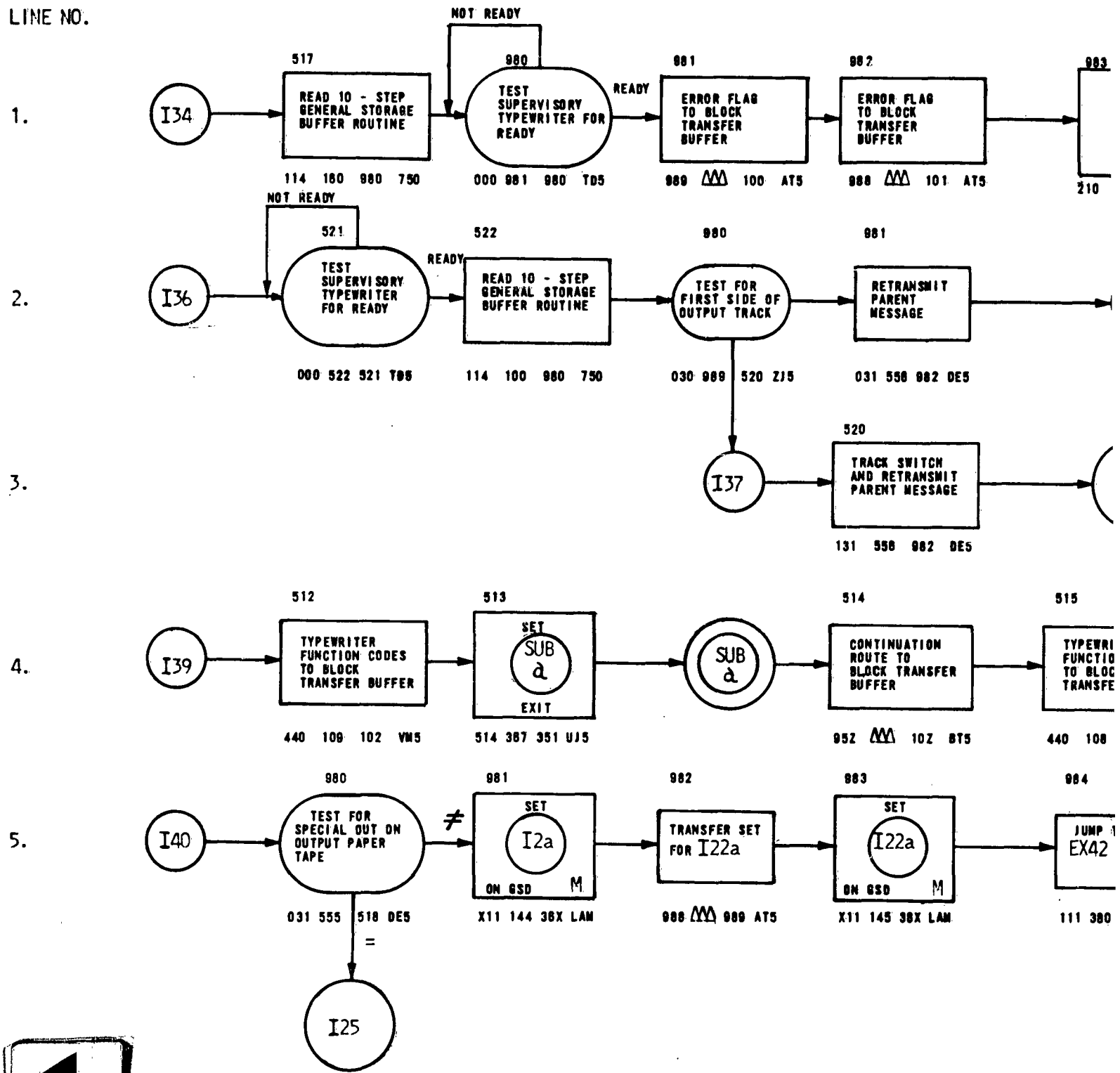
LINE NO.
1.
I34
517
READ 10 - STEP GENERAL STORAGE BUFFER ROUTINE
114 160 980 750
NOT READY
980
TEST SUPERVISORY TYPEWRITER FOR READY
000 981 980 TD5
READY
981
ERROR FLAG TO BLOCK TRANSFER BUFFER
989 100 AT5
982
ERROR FLAG TO BLOCK TRANSFER BUFFER
988 101 AT5
983
210
2.
I36
NOT READY
521
TEST SUPERVISORY TYPEWRITER FOR READY
000 522 521 T96
READY
522
READ 10 - STEP GENERAL STORAGE BUFFER ROUTINE
114 100 980 750
980
TEST FOR FIRST SIDE OF OUTPUT TRACK
030 989 520 ZJ5
981
RETRANSMIT PARENT MESSAGE
031 558 982 DE5
3.
I37
520
TRACK SWITCH AND RETRANSMIT PARENT MESSAGE
131 558 982 DE5
4.
I39
512
TYPEWRITER FUNCTION CODES TO BLOCK TRANSFER BUFFER
440 109 102 VM5
513
SET
SUB a
EXIT
514 387 351 UJ5
SUB a
514
CONTINUATION ROUTE TO BLOCK TRANSFER BUFFER
95Z 10Z BT5
515
TYPEWRI FUNCTIO TO BLOC TRANSFE
440 108
5.
I40
980
TEST FOR SPECIAL OUT ON OUTPUT PAPER TAPE
031 555 518 DE5
=
I25
≠
981
SET
I2a
ON GSD M
X11 144 38X LAM
982
TRANSFER SET FOR I22a
988 989 AT5
983
SET
I22a
ON GSD M
X11 145 38X LAM
984
JUMP EX42
111 380

1

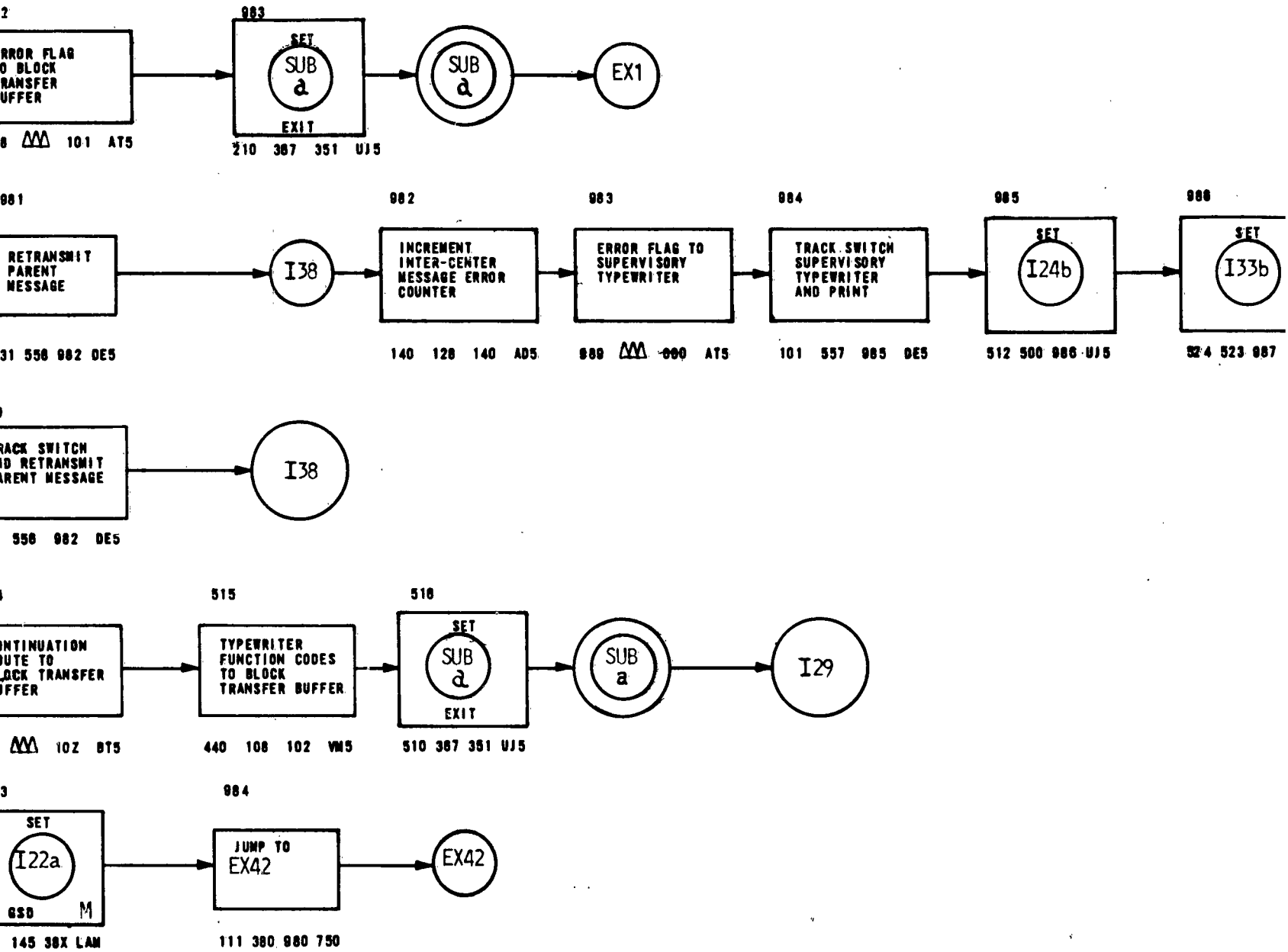
2
RROR FLAG
O BLOCK
RANSFER
UFFER
101 AT5
983
SET
SUB
a
EXIT
210 367 351 UJ5
SUB
a
EX1
981
RETRANSMIT
PARENT
MESSAGE
31 556 982 DE5
I38
982
INCREMENT
INTER-CENTER
MESSAGE ERROR
COUNTER
140 128 140 AD5
983
ERROR FLAG TO
SUPERVISORY
TYPEWRITER
989 000 AT5
984
TRACK SWITCH
SUPERVISORY
TYPEWRITER
AND PRINT
101 557 985 DE5
985
SET
I24b
512 500 986 UJ5
986
SET
I33b
524 523 987
RACK SWITCH
ID RETRANSMIT
ARENT MESSAGE
556 982 DE5
I38
515
TYPEWRITER
FUNCTION CODES
TO BLOCK
TRANSFER BUFFER
440 108 102 VM5
516
SET
SUB
a
EXIT
510 367 351 UJ5
SUB
a
I29
NTINUATION
OUTE TO
LOCK TRANSFER
UFFER
10Z BT5
3
SET
I22a
GSD
M
145 38X LAM
984
JUMP TO
EX42
111 380 980 750
EX42

2

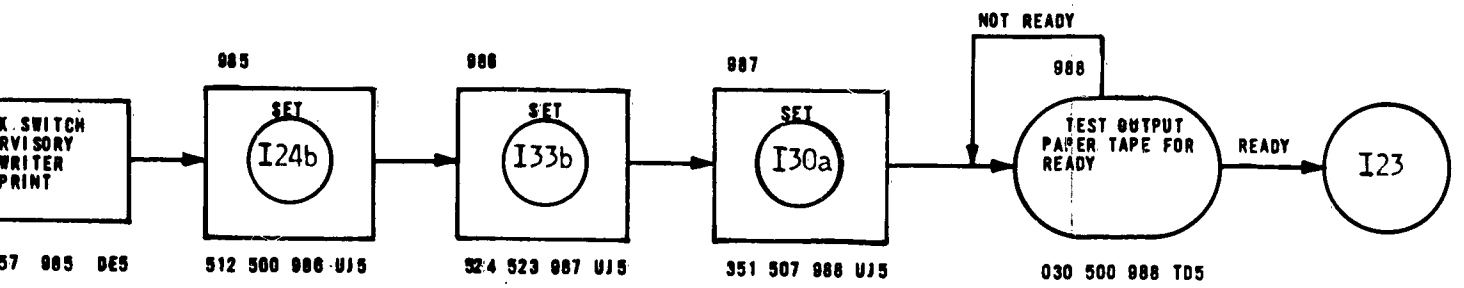
X SWITCH
RVISORY
WRITER
PRINT
57 985 DE5
985
SET
I24b
512 500 986 UJ5
986
SET
I33b
524 523 987 UJ5
987
SET
I30a
351 507 988 UJ5
NOT READY
988
TEST OUTPUT
PAPER TAPE FOR
READY
030 500 988 TD5
READY
I23

CONSTANTS FACTORS AND WORKING STORAGE FOR INTER-CENTER MESSAGE ROUTINE.

ON HIGH SPEED DRUM:

1	5	0		Δ	Δ	Δ	Δ	Δ	Δ	Δ	Δ	Δ	Δ	Δ	Δ	COMPARATOR
4	3	0		Δ	Δ	Δ	Δ	A	A	A	A	A	?	@	%	OUTPUT CONSTANT
4	3	1		i	i	i	i	i	i	i	i	i	i	M	i	COMPARATOR
4	3	2		P	i	i	i	i	i	i	i	i	i	i	i	COMPARATOR
4	3	3		Δ	Δ	Δ	Δ	Δ	Δ	Z	A	C	Δ	E	Δ	OUTPUT CONSTANT
4	3	4		Δ	Δ	Δ	Δ	Δ	Δ	Z	A	C	Δ	N	Δ	OUTPUT CONSTANT
4	3	5		Δ	Δ	Δ	Δ	Δ	Δ	Z	A	C	Δ	M	Δ	OUTPUT CONSTANT
4	3	6		i	i	i	i	i	i	i	i	i	.	.	i	"PAD"FILLER
4	3	7		i	i	i	i	i	.	.	.	.	.	.	.	"PAD" FILLER
4	3	8		?	@	$	Δ	Δ	Δ	Δ	Δ	Δ	Δ	Δ	Δ	"REMARKS" OUTPUT CONSTANT
4	4	9		Δ	Δ	Δ	Δ	Δ	Δ	Z	A	C	Δ	X	Δ	OUTPUT CONSTANT
4	4	0		/	?	r	I	Δ	C	Δ	M	Δ	E	r	|	ERROR CONSTANT

ON GENERAL STORAGE DRUM

9	8	9		/	?	r	I	Δ	C	Δ	M	Δ	E	r	|	CONSTANT FOR I36

9	8	7		0	3	0	4	4	3	4	4	1	T	D	5	CONSTANTS FOR I35
9	8	8		1	1	4	1	4	0	9	8	0	7	5	0	
9	8	9		0	3	0	4	4	2	5	2	2	T	D	5	

9	8	8		1	1	1	3	8	0	9	8	0	7	5	0	CONSTANTS FOR I40
9	8	9		0	3	0	4	4	2	4	4	1	T	D	7	

9	8	8		r	r	|	Δ	Δ	Δ	Δ	Δ	Δ	Δ	Δ	Δ	CONSTANTS FOR I34
9	8	9		r	r	/	?	M	Δ	E	β	Δ	O	U	T	

9	8	8		r	?	0	N	E	Δ	I	C	M	E	r	|	CONSTANTS FOR I25
9	8	9		i	i	i	i	i	i	i	i	i	?	@	%	

APPENDIX XII

DEPARTURE/MODIFICATION ROUTINE

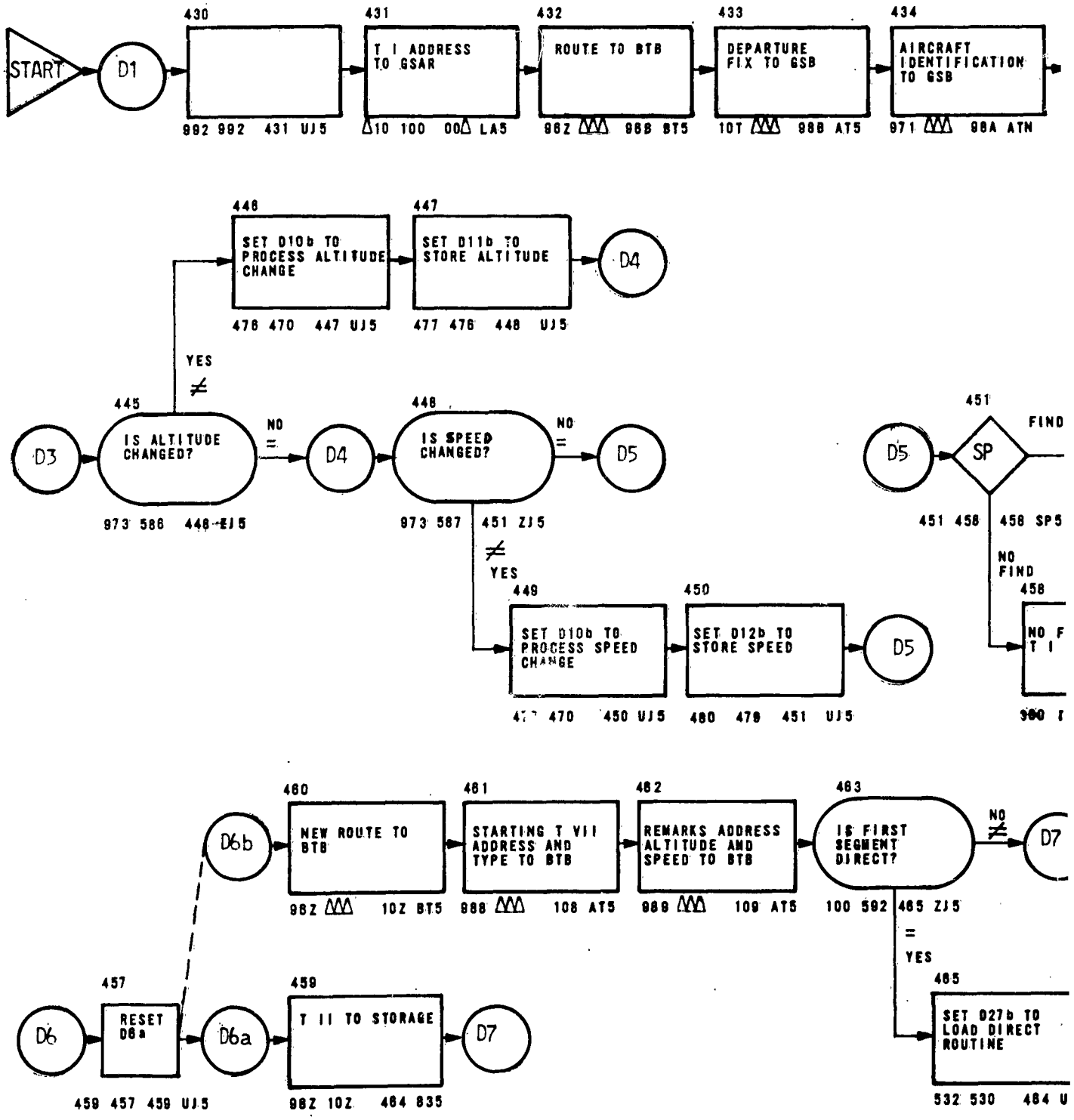
START
D1
430
992 992 431 UJ5
431
T I ADDRESS TO GSAR
Δ10 100 00Δ LA5
432
ROUTE TO BTB
98Z 98B BT5
433
DEPARTURE FIX TO GSB
10T 98B AT5
434
AIRCRAFT IDENTIFICATION TO GSB
971 98A ATN
446
SET D10b TO PROCESS ALTITUDE CHANGE
476 470 447 UJ5
447
SET D11b TO STORE ALTITUDE
477 476 448 UJ5
D4
YES
≠
445
D3
IS ALTITUDE CHANGED?
973 586 448 EJ5
NO
=
D4
448
IS SPEED CHANGED?
973 587 451 ZJ5
NO
=
D5
≠
YES
449
SET D10b TO PROCESS SPEED CHANGE
450 UJ5
450
SET D12b TO STORE SPEED
480 479 451 UJ5
D5
D5
451
SP
FIND
451 458 458 SP5
NO FIND
458
NO F
T I
460
D6b
NEW ROUTE TO BTB
98Z 10Z BT5
461
STARTING T VII ADDRESS AND TYPE TO BTB
988 108 AT5
462
REMARKS ADDRESS ALTITUDE AND SPEED TO BTB
989 109 AT5
463
IS FIRST SEGMENT DIRECT?
100 592 465 ZJ5
NO
≠
D7
=
YES
465
SET D27b TO LOAD DIRECT ROUTINE
532 530 464 U
457
D6
RESET D6a
459 457 459 UJ5
D6a
459
T II TO STORAGE
98Z 10Z 464 835
D7

1

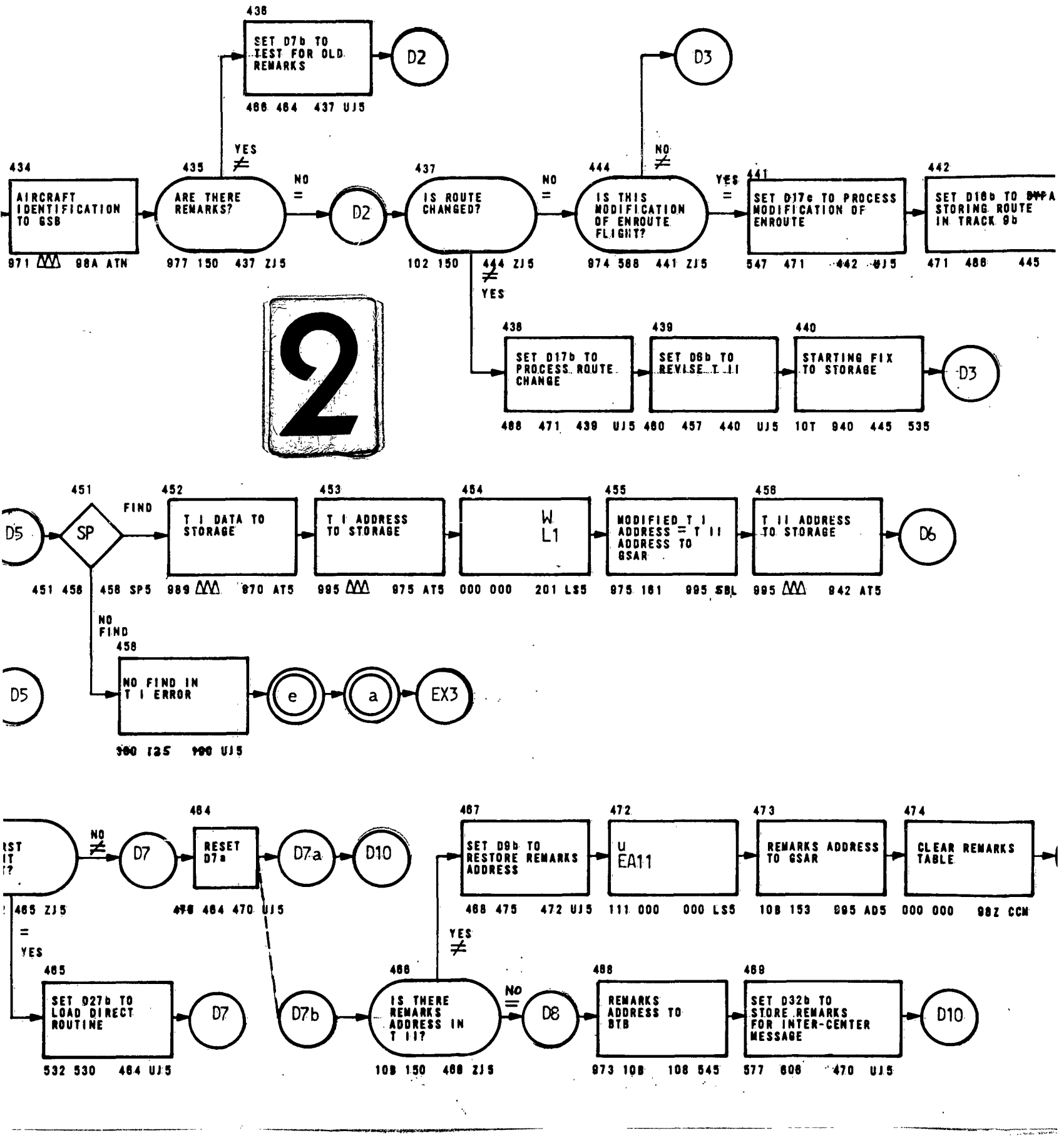

436
SET D7b TO TEST FOR OLD REMARKS
D2
466 464 437 UJ5
D3
YES
≠
NO
≠
434
AIRCRAFT IDENTIFICATION TO GSB
971 98A ATN
435
ARE THERE REMARKS?
977 150 437 ZJ5
NO
=
D2
437
IS ROUTE CHANGED?
102 150 444 ZJ5
NO
=
444
IS THIS MODIFICATION OF ENROUTE FLIGHT?
974 588 441 ZJ5
YES
=
441
SET D17c TO PROCESS MODIFICATION OF ENROUTE
547 471 442 UJ5
442
SET D16b TO STORING ROUTE IN TRACK 9b
471 486 445
≠
YES
438
SET D17b TO PROCESS ROUTE CHANGE
488 471 439 UJ5
439
SET D6b TO REVISE T II
460 457 440 UJ5
440
STARTING FIX TO STORAGE
10T 940 445 535
D3
2
D5
451
SP
451 458 458 SP5
FIND
452
T I DATA TO STORAGE
989 970 AT5
453
T I ADDRESS TO STORAGE
995 975 AT5
454
W
L1
000 000 201 LS5
455
MODIFIED T I ADDRESS = T II ADDRESS TO GSAR
975 161 995 SBL
456
T II ADDRESS TO STORAGE
995 942 AT5
D6
NO FIND
458
NO FIND IN T I ERROR
300 125 190 UJ5
e
a
EX3
D5
NO
≠
D7
464
RESET D7a
476 464 470 UJ5
D7a
D10
465 ZJ5
=
YES
465
SET D27b TO LOAD DIRECT ROUTINE
532 530 464 UJ5
D7
D7b
466
IS THERE REMARKS ADDRESS IN T II?
108 150 468 ZJ5
YES
≠
NO
=
D8
467
SET D9b TO RESTORE REMARKS ADDRESS
468 475 472 UJ5
472
U
EA11
111 000 000 LS5
473
REMARKS ADDRESS TO GSAR
108 153 995 AD5
474
CLEAR REMARKS TABLE
000 000 98Z CCM
468
REMARKS ADDRESS TO BTB
973 108 108 545
469
SET D32b TO STORE REMARKS FOR INTER-CENTER MESSAGE
577 606 470 UJ5
D10

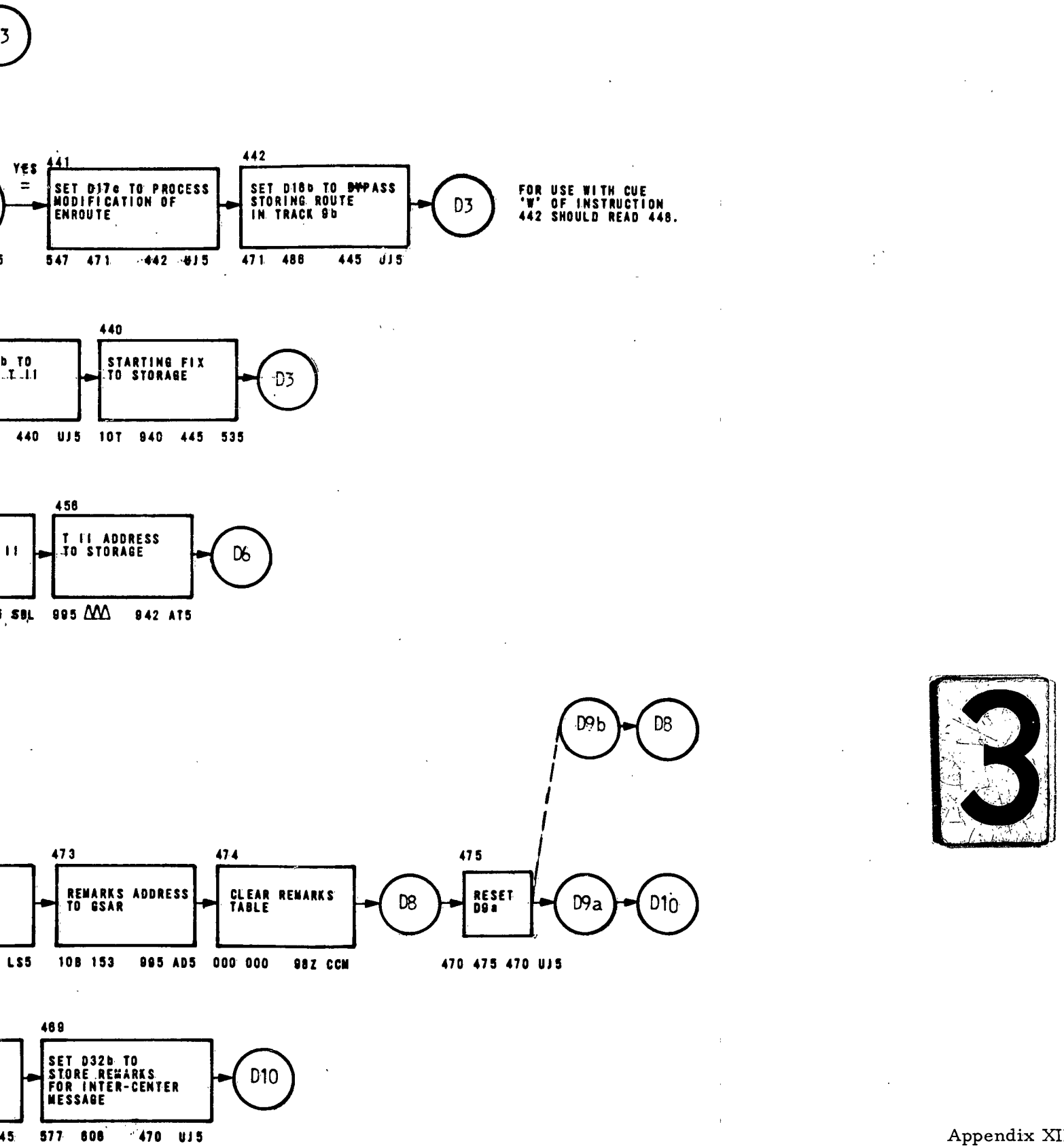
3
YES
=
441
SET D17c TO PROCESS MODIFICATION OF ENROUTE
547 471 442 UJ5
442
SET D18b TO BYPASS STORING ROUTE IN TRACK 9b
471 488 445 UJ5
D3
FOR USE WITH CUE 'W' OF INSTRUCTION 442 SHOULD READ 448.
440
STARTING FIX TO STORAGE
D3
440 UJ5 10T 940 445 535
458
T II ADDRESS TO STORAGE
D6
SBL 995 942 AT5
D9b
D8
473
REMARKS ADDRESS TO GSAR
474
CLEAR REMARKS TABLE
D8
475
RESET D9a
D9a
D10
LS5 108 153 995 AD5 000 000 98Z CCM
470 475 470 UJ5
469
SET D32b TO STORE REMARKS FOR INTER-CENTER MESSAGE
D10
45 577 608 470 UJ5

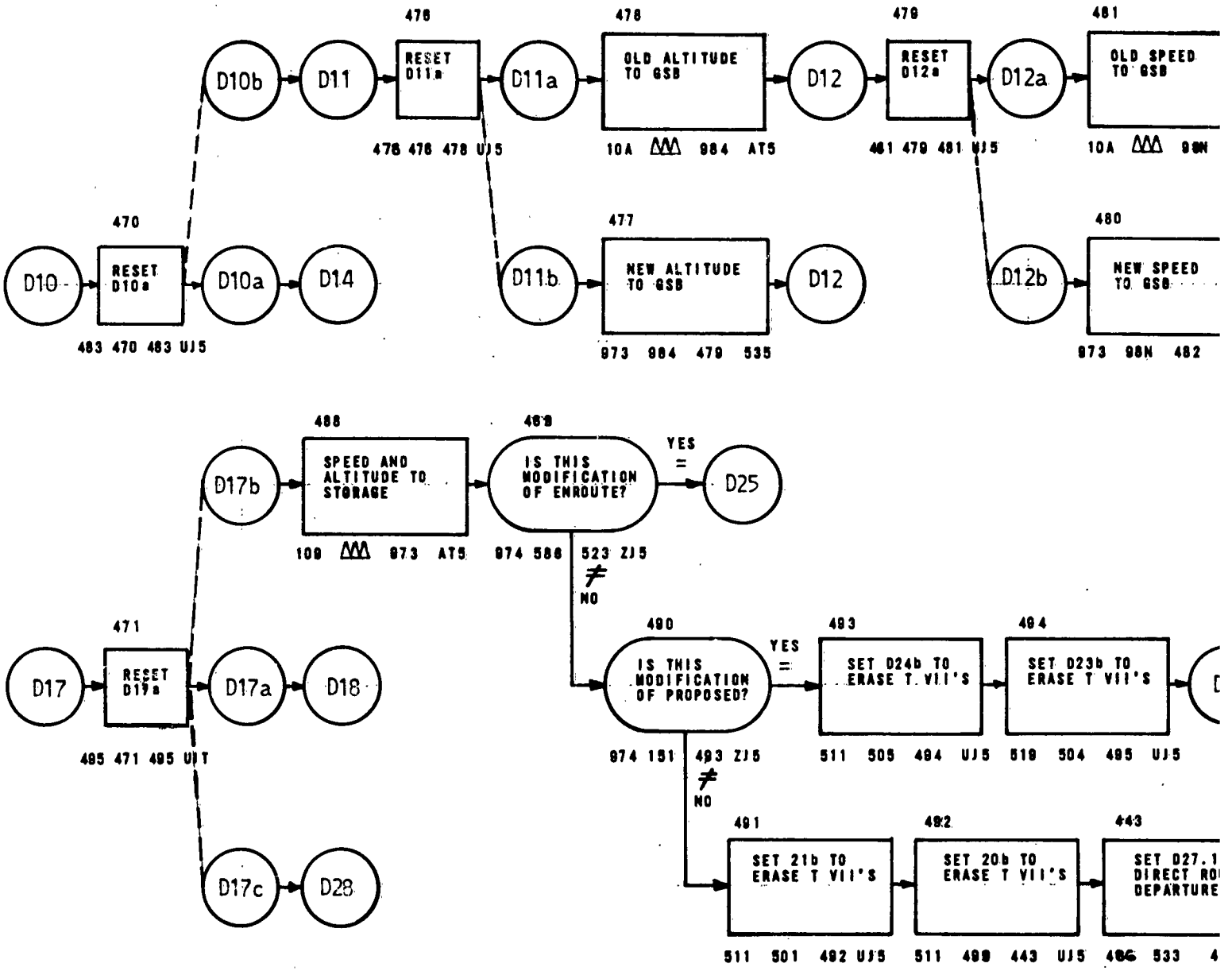
D10
470
RESET D10a
483 470 483 UJ5
D10a
D14
D10b
D11
476
RESET D11a
476 476 476 UJ5
D11a
478
OLD ALTITUDE TO GSB
10A 984 AT5
D12
479
RESET D12a
481 479 481 UJ5
D12a
481
OLD SPEED TO GSB
10A 98N
D11b
477
NEW ALTITUDE TO GSB
973 984 479 535
D12
D12b
480
NEW SPEED TO GSB
973 98N 482
D17
471
RESET D17a
495 471 495 UJT
D17a
D18
D17b
488
SPEED AND ALTITUDE TO STORAGE
109 973 AT5
489
IS THIS MODIFICATION OF ENROUTE?
974 586 523 ZJ5
YES =
D25
≠ NO
D17c
D28
490
IS THIS MODIFICATION OF PROPOSED?
974 151 493 ZJ5
YES =
493
SET D24b TO ERASE T VII'S
511 505 494 UJ5
494
SET D23b TO ERASE T VII'S
519 504 495 UJ5
≠ NO
491
SET 21b TO ERASE T VII'S
511 501 492 UJ5
492
SET 20b TO ERASE T VII'S
511 499 443 UJ5
443
SET D27.1 DIRECT RO DEPARTURE
486 533

1

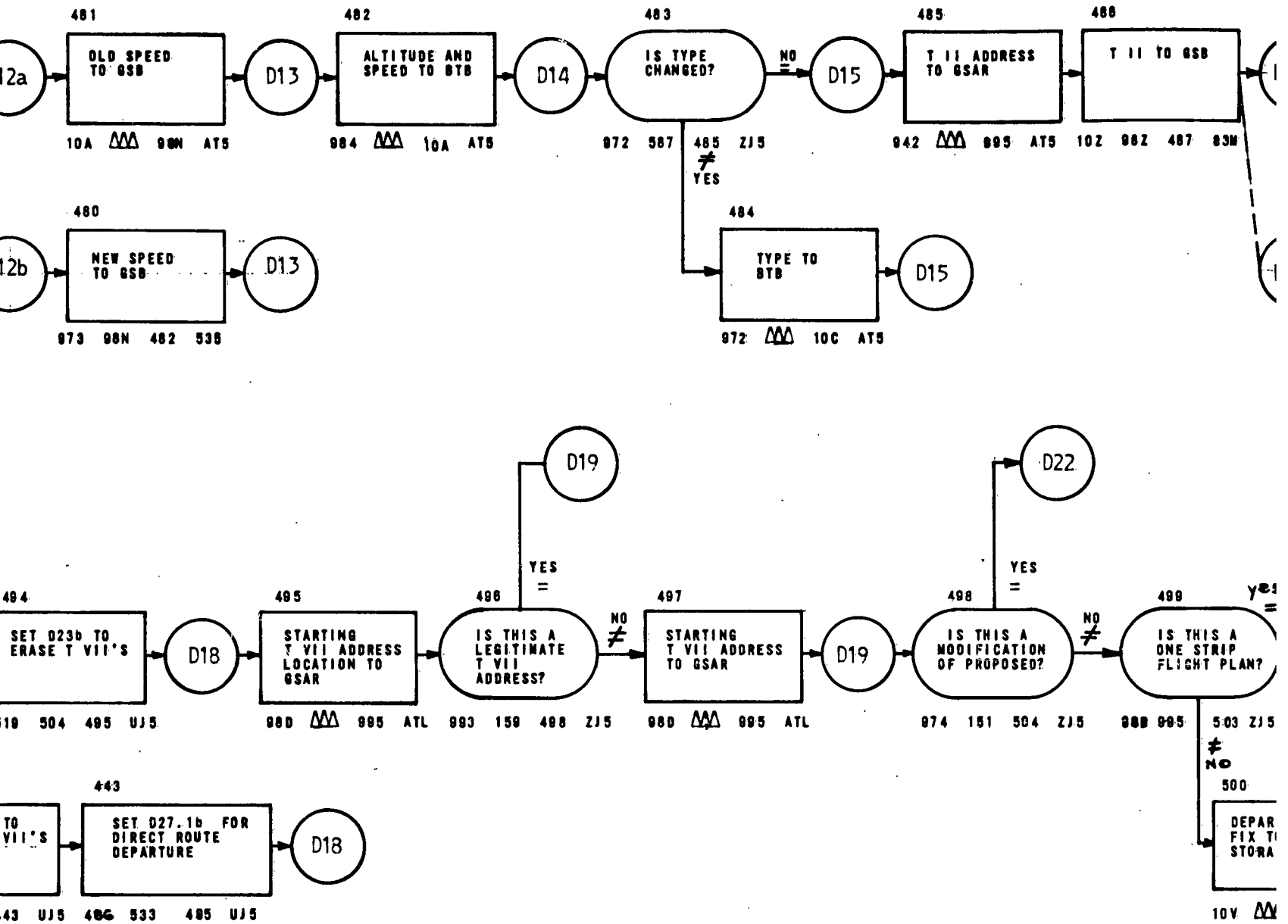
481
OLD SPEED TO GSB
10A 98N AT5
482
ALTITUDE AND SPEED TO BTB
984 10A AT5
483
IS TYPE CHANGED?
NO
972 587 485 ZJ5
YES
485
T II ADDRESS TO GSAR
942 995 AT5
486
T II TO GSB
10Z 98Z 487 83M
12a
D13
D14
D15
12b
480
NEW SPEED TO GSB
973 98N 482 538
484
TYPE TO BTB
972 10C AT5
D19
D22
YES
=
494
SET D23b TO ERASE T VII'S
D18
495
STARTING T VII ADDRESS LOCATION TO GSAR
98D 995 ATL
496
IS THIS A LEGITIMATE T VII ADDRESS?
NO
≠
497
STARTING T VII ADDRESS TO GSAR
98D 995 ATL
498
IS THIS A MODIFICATION OF PROPOSED?
974 151 504 ZJ5
499
IS THIS A ONE STRIP FLIGHT PLAN?
993 995 503 ZJ5
≠
NO
443
SET D27.1b FOR DIRECT ROUTE DEPARTURE
533 485 UJ5
500
10V

2

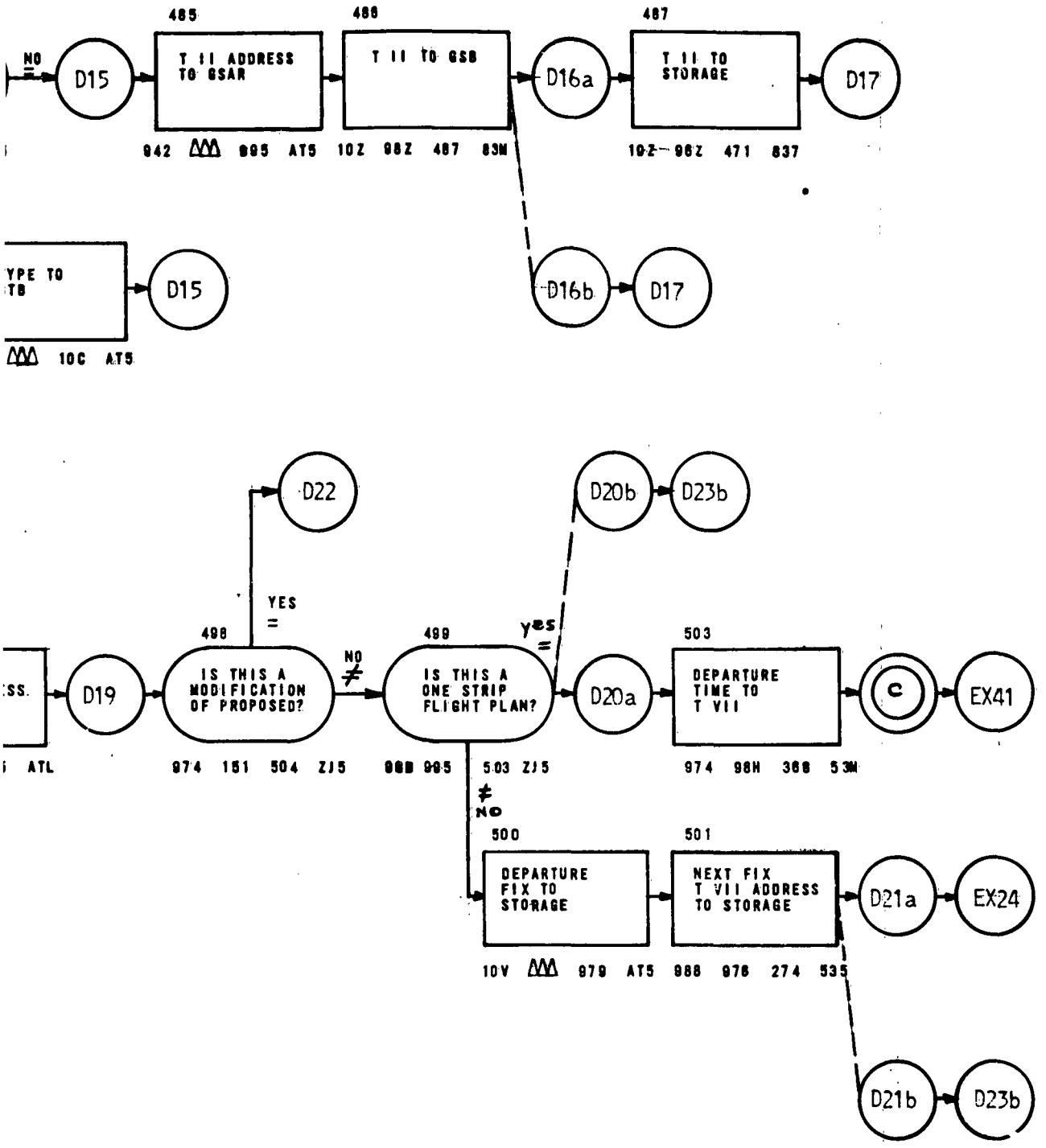
485
T II ADDRESS TO GSAR
942 995 AT5 10Z 98Z 487 83M
486
T II TO GSB
487
T II TO STORAGE
10Z 98Z 471 837
NO
D15
D16a
D17
D16b
D17
YPE TO TB
10C AT5
D15
D22
D20b
D23b
YES
498
IS THIS A MODIFICATION OF PROPOSED?
974 151 504 ZJ5
NO
499
IS THIS A ONE STRIP FLIGHT PLAN?
988 995 503 ZJ5
yes
D19
D20a
503
DEPARTURE TIME TO T VII
974 98H 368 53M
C
EX41
ATL
NO
500
DEPARTURE FIX TO STORAGE
10V 979 AT5
501
NEXT FIX T VII ADDRESS TO STORAGE
988 976 274 535
D21a
EX24
D21b
D23b

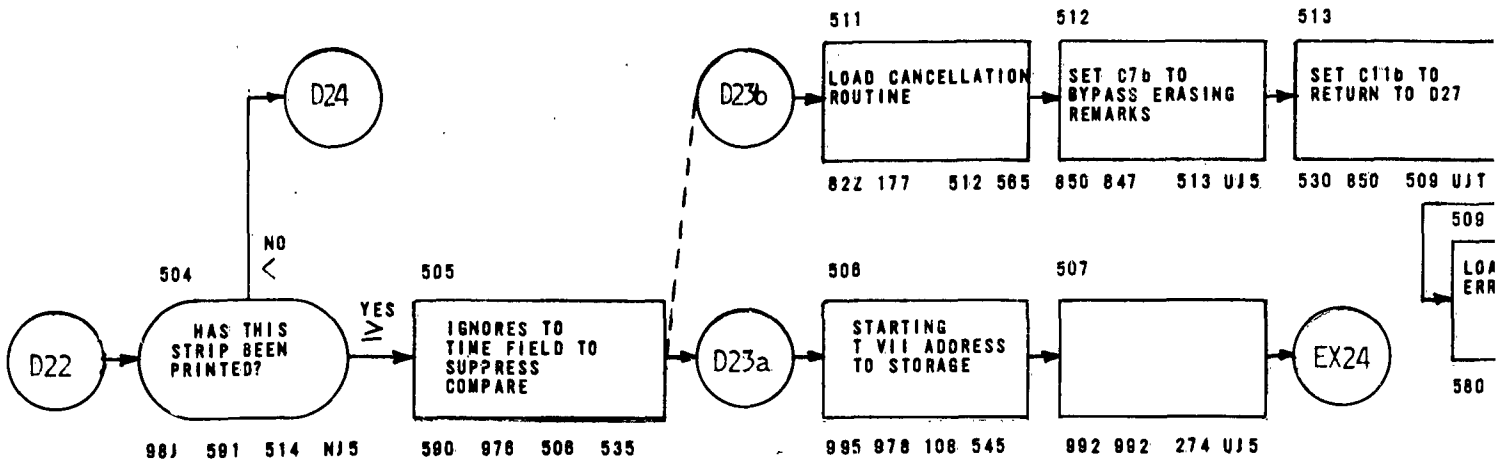
D22
504
HAS THIS STRIP BEEN PRINTED?
NO <
D24
YES ≥
505
IGNORES TO TIME FIELD TO SUPPRESS COMPARE
D23b
D23a
511
LOAD CANCELLATION ROUTINE
512
SET C7b TO BYPASS ERASING REMARKS
513
SET C11b TO RETURN TO D27
506
STARTING T VII ADDRESS TO STORAGE
507
EX24
509
580
98J 591 514 NJ5
590 978 508 535
822 177 512 565
850 847 513 UJ5
530 850 509 UJT
995 978 108 545
992 992 274 UJ5

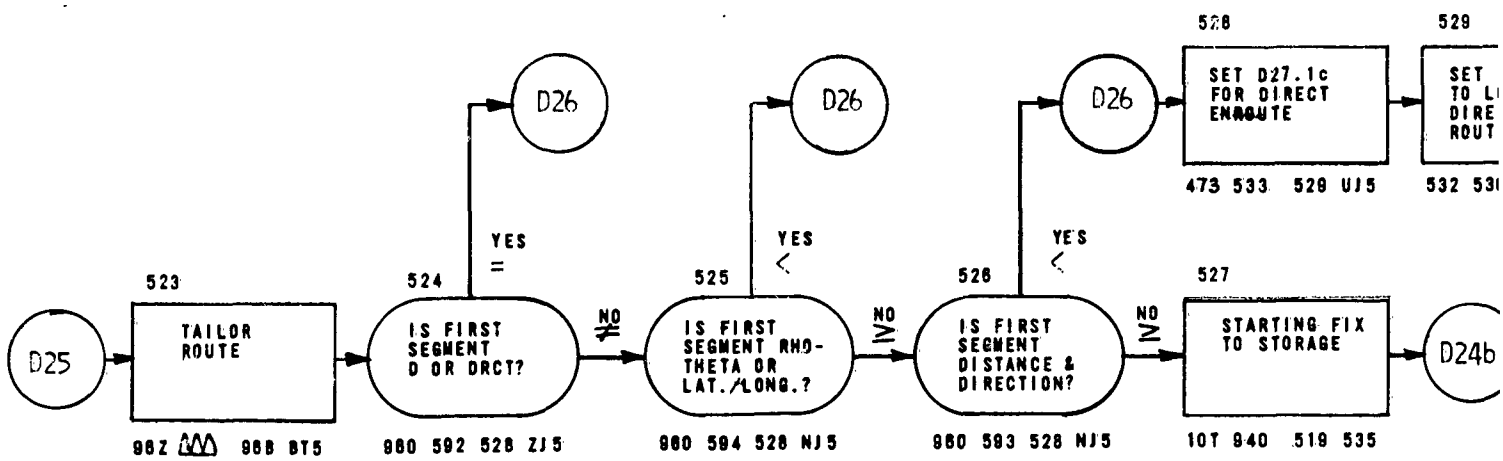
D25
523
TAILOR ROUTE
524
IS FIRST SEGMENT D OR DRCT?
YES =
D26
NO ≠
525
IS FIRST SEGMENT RHO-THETA OR LAT./LONG.?
YES <
D26
NO ≥
526
IS FIRST SEGMENT DISTANCE & DIRECTION?
YES <
D26
NO ≥
527
STARTING FIX TO STORAGE
D24b
528
SET D27.1c FOR DIRECT ENROUTE
529
473 533 529 UJ5
98Z 988 BT5
980 592 528 ZJ5
980 594 528 NJ5
980 593 528 NJ5
10T 940 519 535

1

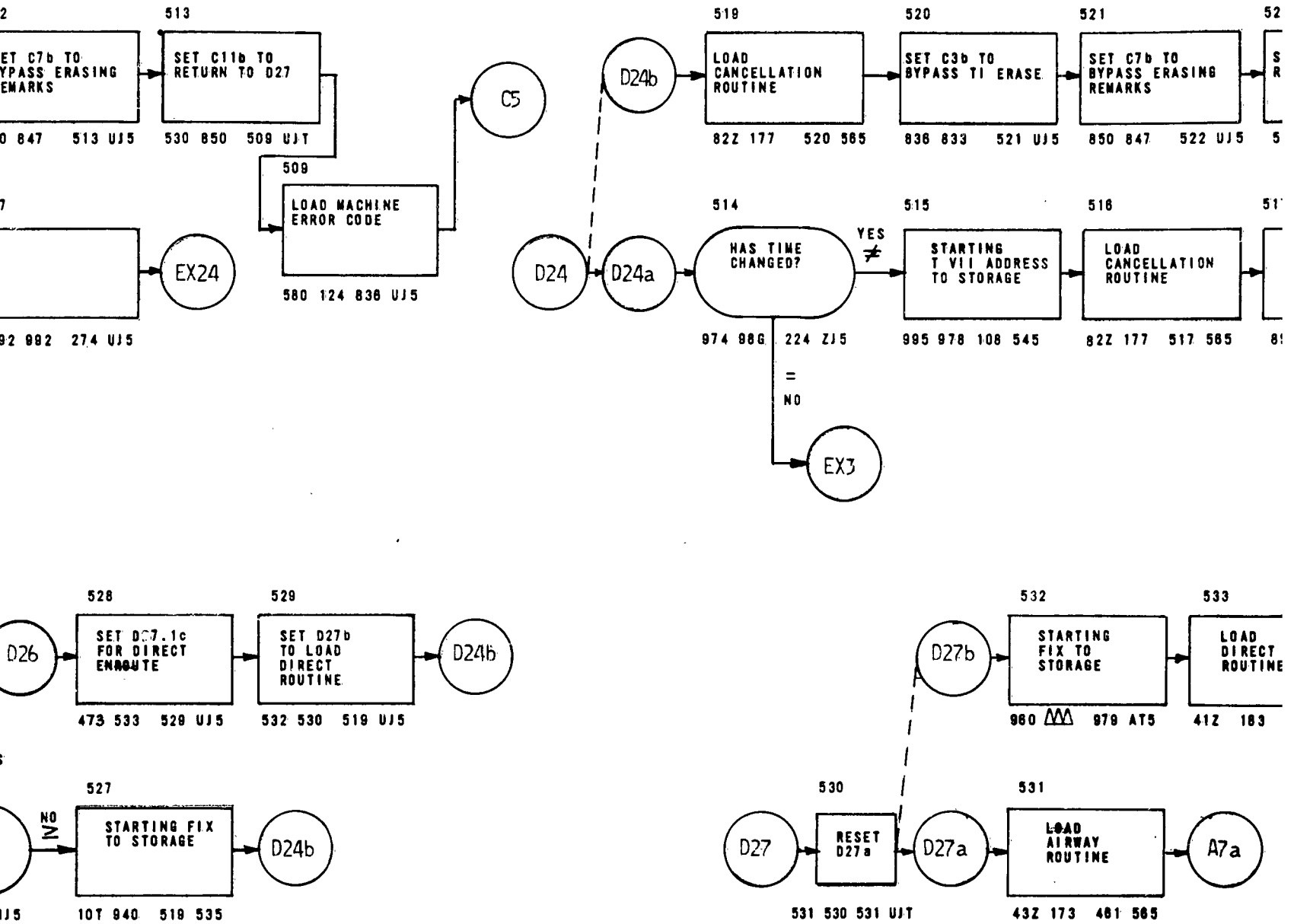
2
ET C7b TO
YPASS ERASING
EMARKS
0 847 513 UJ5
513
SET C11b TO
RETURN TO D27
530 850 509 UJT
509
LOAD MACHINE
ERROR CODE
580 124 836 UJ5
C5
7
EX24
92 992 274 UJ5
D24b
519
LOAD
CANCELLATION
ROUTINE
82Z 177 520 565
520
SET C3b TO
BYPASS TI ERASE
836 833 521 UJ5
521
SET C7b TO
BYPASS ERASING
REMARKS
850 847 522 UJ5
52
S
R
5
D24
D24a
514
HAS TIME
CHANGED?
YES
≠
974 986 224 ZJ5
=
NO
EX3
515
STARTING
T VII ADDRESS
TO STORAGE
995 978 108 545
516
LOAD
CANCELLATION
ROUTINE
82Z 177 517 565
51
8

D26
528
SET D27.1c
FOR DIRECT
ENROUTE
473 533 528 UJ5
529
SET D27b
TO LOAD
DIRECT
ROUTINE
532 530 519 UJ5
D24b
s
NO
527
STARTING FIX
TO STORAGE
10T 940 519 535
D24b
UJ5
D27b
532
STARTING
FIX TO
STORAGE
960 979 AT5
533
LOAD
DIRECT
ROUTINE
41Z 183
D27
530
RESET
D27a
531 530 531 UJT
D27a
531
LOAD
AIRWAY
ROUTINE
43Z 173 461 565
A7a

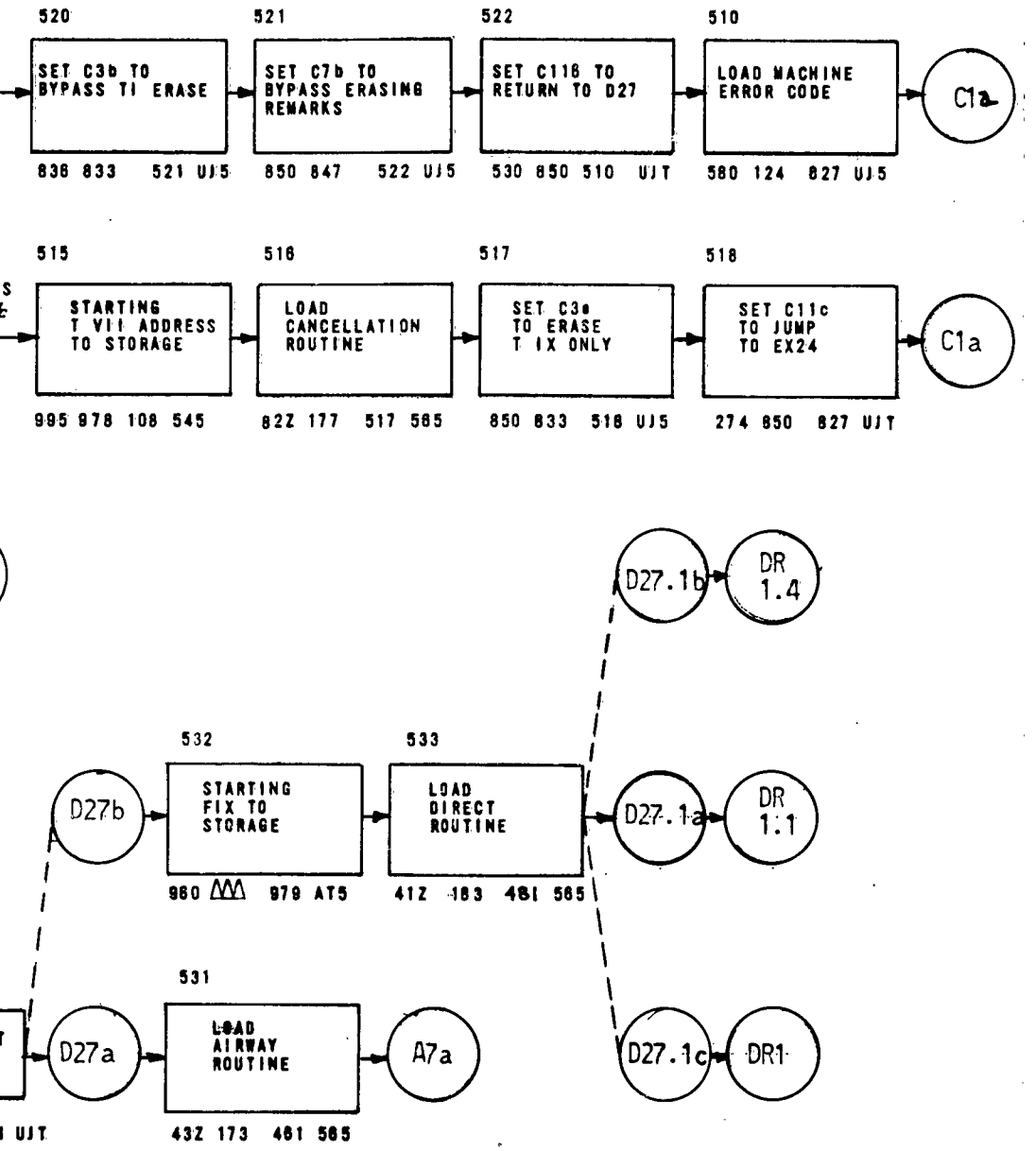
520
SET C3b TO BYPASS TI ERASE
836 833 521 UJ5
521
SET C7b TO BYPASS ERASING REMARKS
850 847 522 UJ5
522
SET C11B TO RETURN TO D27
530 850 510 UJT
510
LOAD MACHINE ERROR CODE
580 124 827 UJ5
C1a
515
STARTING T VII ADDRESS TO STORAGE
995 978 108 545
516
LOAD CANCELLATION ROUTINE
82Z 177 517 565
517
SET C3a TO ERASE T IX ONLY
850 833 518 UJ5
518
SET C11c TO JUMP TO EX24
274 850 827 UJT
C1a
D27.1b
DR 1.4
532
STARTING FIX TO STORAGE
960 979 AT5
533
LOAD DIRECT ROUTINE
41Z 183 481 565
D27b
D27.1a
DR 1.1
531
LOAD AIRWAY ROUTINE
43Z 173 461 565
D27a
A7a
D27.1c
DR1

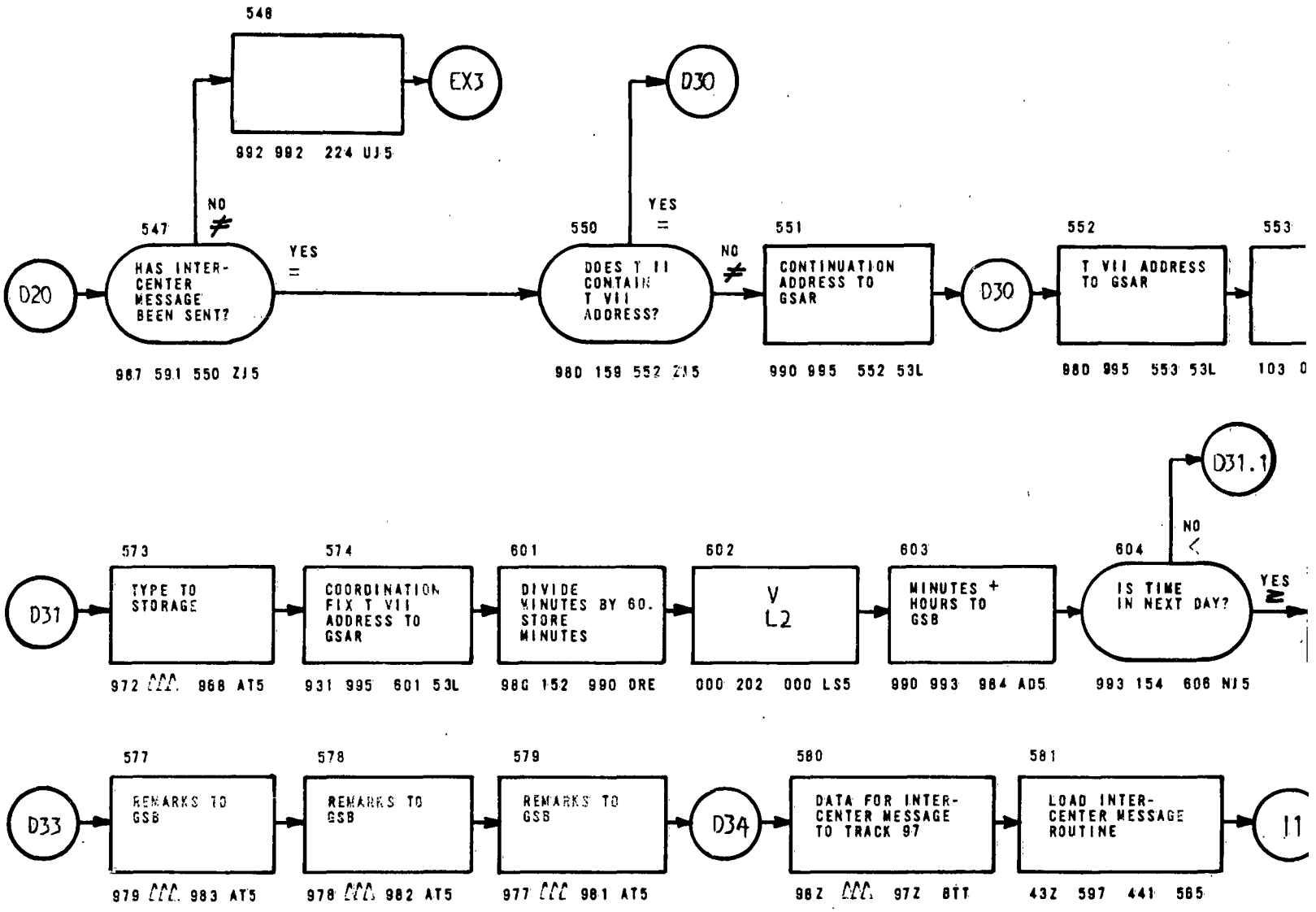
548
EX3
992 992 224 UJ5
D30
NO
≠
547
YES
=
550
YES
=
551
552
553
D20
HAS INTER-CENTER MESSAGE BEEN SENT?
DOES T II CONTAIN T VII ADDRESS?
NO
≠
CONTINUATION ADDRESS TO GSAR
D30
T VII ADDRESS TO GSAR
987 591 550 ZJ5
980 159 552 ZJ5
990 995 552 53L
980 995 553 53L
D31.1
NO
<
573
574
601
602
603
604
D31
TYPE TO STORAGE
COORDINATION FIX T VII ADDRESS TO GSAR
DIVIDE MINUTES BY 60. STORE MINUTES
V
L2
MINUTES + HOURS TO GSB
IS TIME IN NEXT DAY?
YES
≥
972 868 AT5
931 995 601 53L
980 152 990 DRE
000 202 000 LS5
990 993 984 AD5
993 154 606 NJ5
577
578
579
580
581
D33
REMARKS TO GSB
REMARKS TO GSB
REMARKS TO GSB
D34
DATA FOR INTER-CENTER MESSAGE TO TRACK 97
LOAD INTER-CENTER MESSAGE ROUTINE
979 983 AT5
978 982 AT5
977 981 AT5
982 972 BTT
432 597 441 565

1

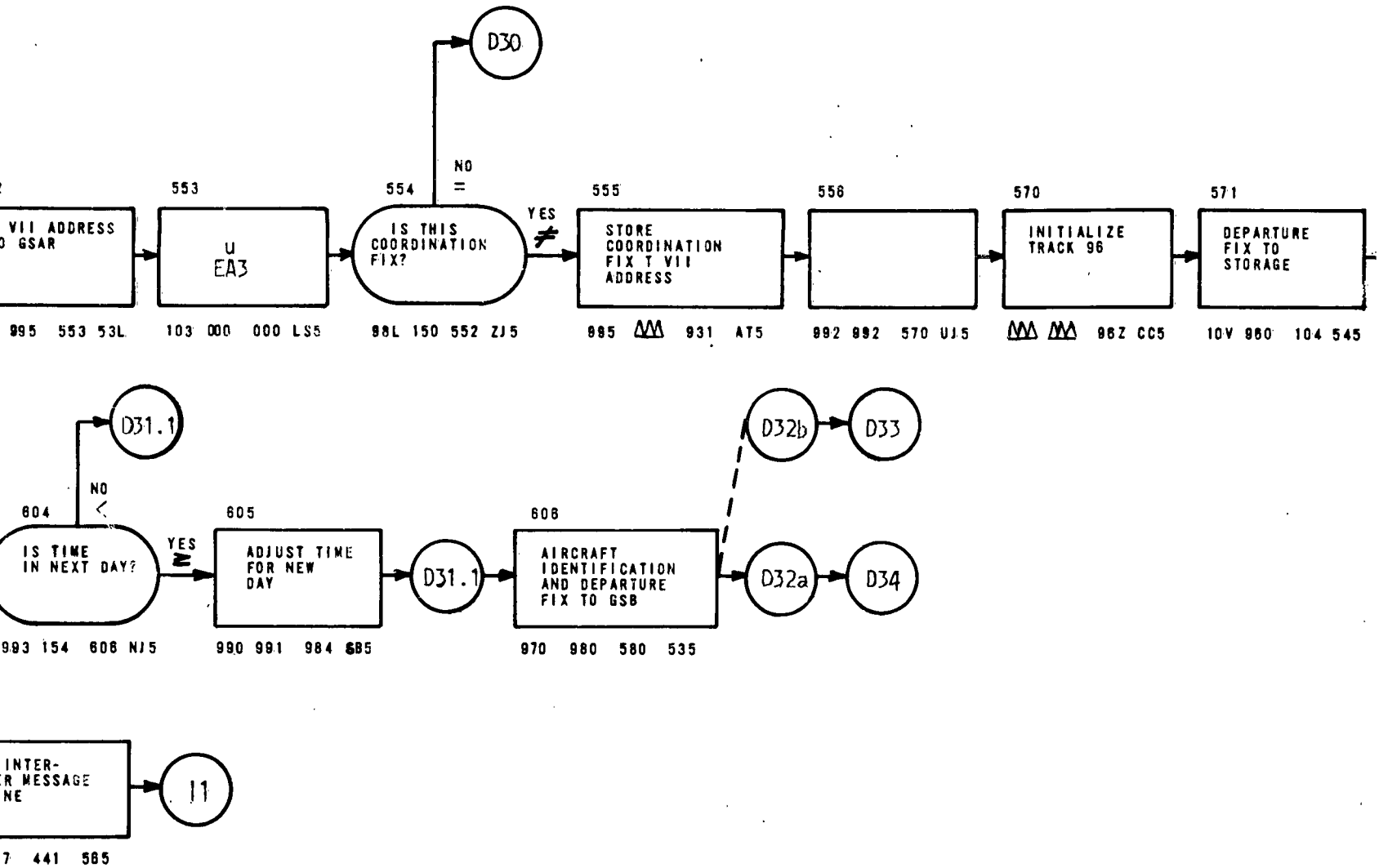
D30
NO
=
553
554
555
556
570
571
VII ADDRESS
GSAR
U
EA3
IS THIS
COORDINATION
FIX?
YES
≠
STORE
COORDINATION
FIX T VII
ADDRESS
INITIALIZE
TRACK 96
DEPARTURE
FIX TO
STORAGE
995 553 53L
103 000 000 LS5
98L 150 552 ZJ5
985 931 AT5
992 992 570 UJ5
96Z CC5
10V 960 104 545
D31.1
NO
<
604
605
606
D32b
D33
IS TIME
IN NEXT DAY?
YES
≥
ADJUST TIME
FOR NEW
DAY
D31.1
AIRCRAFT
IDENTIFICATION
AND DEPARTURE
FIX TO GSB
D32a
D34
993 154 606 NJ5
990 991 984 685
970 980 580 535
INTER-
R MESSAGE
NE
I1
7 441 565

NO

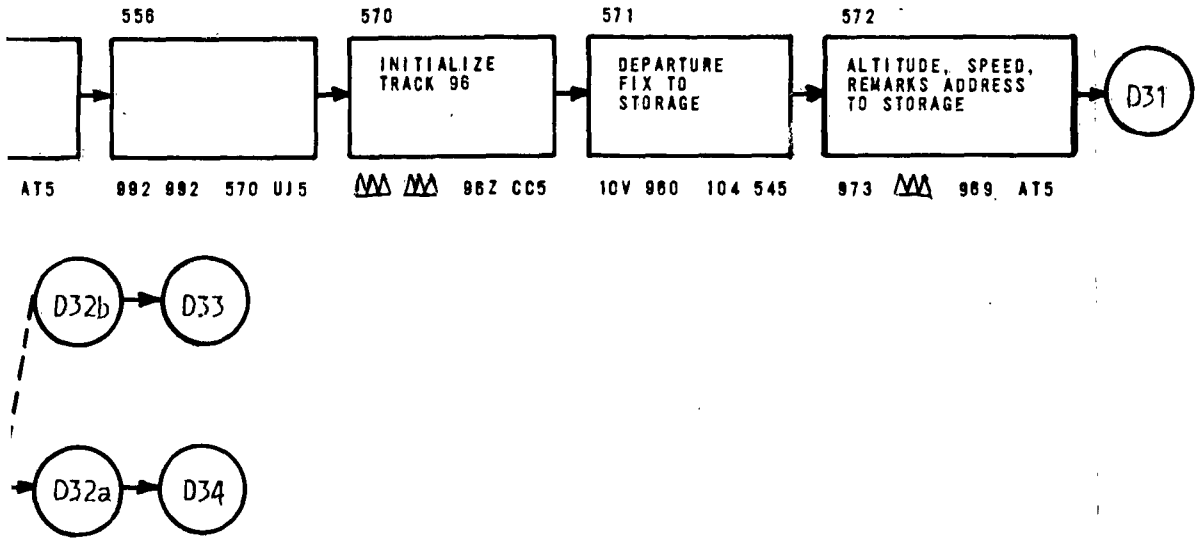

NOTE: FOR USE WITH UPDATE AND POSITION REPORT ROUTINES, PAGES 5 & 6 REPLACE PAGE 4 . CODING AND CONNECTORS ON THESE PAGES ARE COMPATIBLE.

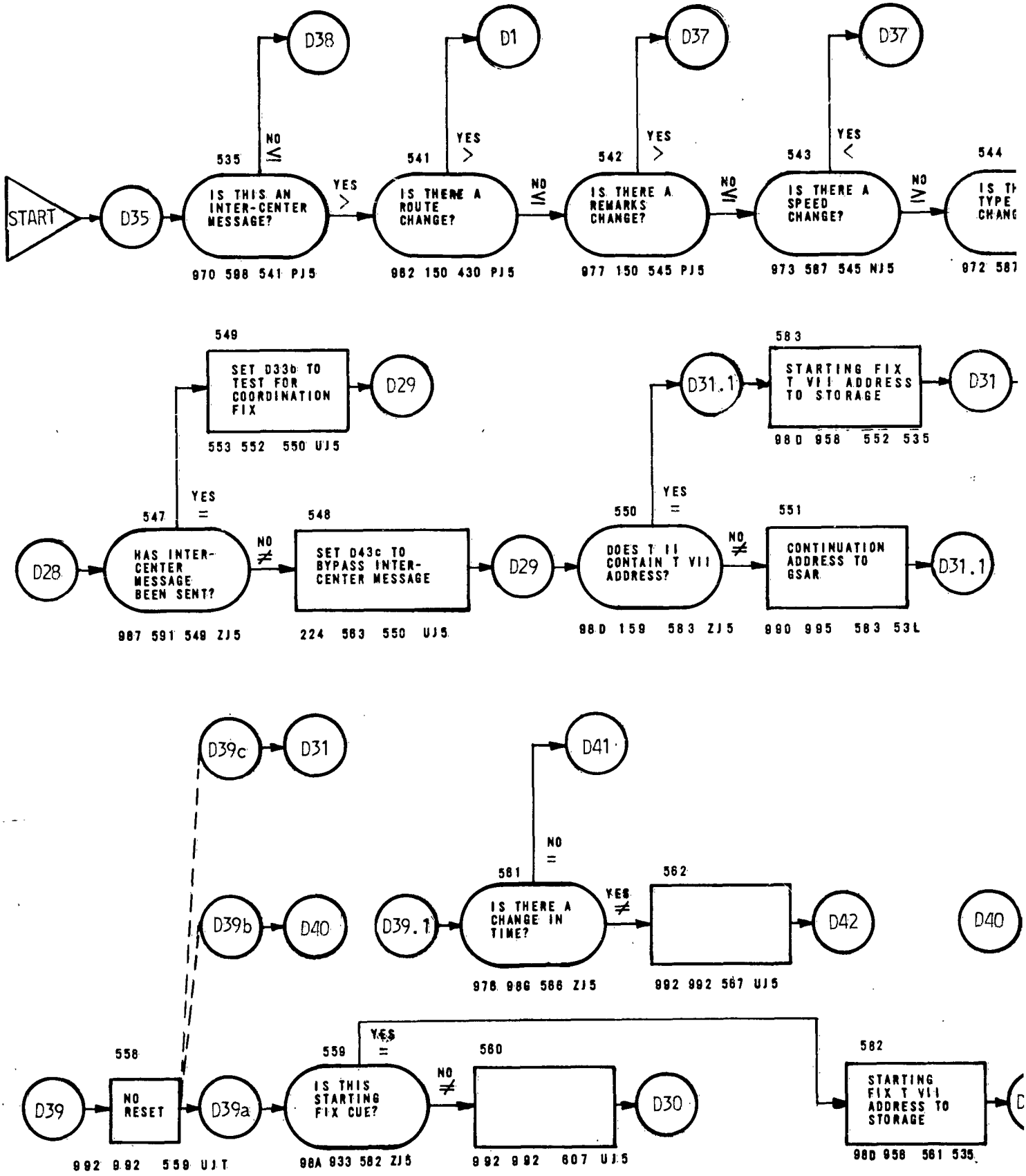
START
D35
535
IS THIS AN INTER-CENTER MESSAGE?
970 598 541 PJ5
NO ≤
D38
YES >
541
IS THERE A ROUTE CHANGE?
982 150 430 PJ5
YES >
D1
NO ≤
542
IS THERE A REMARKS CHANGE?
977 150 545 PJ5
YES >
D37
NO ≤
543
IS THERE A SPEED CHANGE?
973 587 545 NJ5
YES <
D37
NO ≤
544
IS TH TYPE CHANG
972 587
549
SET D33b TO TEST FOR COORDINATION FIX
553 552 550 UJ5
D29
D28
547
HAS INTER-CENTER MESSAGE BEEN SENT?
987 591 549 ZJ5
YES =
NO ≠
548
SET D43c TO BYPASS INTER-CENTER MESSAGE
224 563 550 UJ5
D29
550
DOES T II CONTAIN T VII ADDRESS?
980 159 583 ZJ5
YES =
NO ≠
551
CONTINUATION ADDRESS TO GSAR
990 995 583 53L
D31.1
583
STARTING FIX T VII ADDRESS TO STORAGE
980 958 552 535
D31
D39c
D31
D39b
D40
D39.1
561
IS THERE A CHANGE IN TIME?
976 986 586 ZJ5
NO =
D41
YES ≠
562
992 992 567 UJ5
D42
D40
D39
558
NO RESET
992 992 559 UJT
D39a
559
IS THIS STARTING FIX CUE?
98A 933 582 ZJ5
YES =
NO ≠
560
992 992 607 UJ5
D30
582
STARTING FIX T VII ADDRESS TO STORAGE
980 958 561 535

1

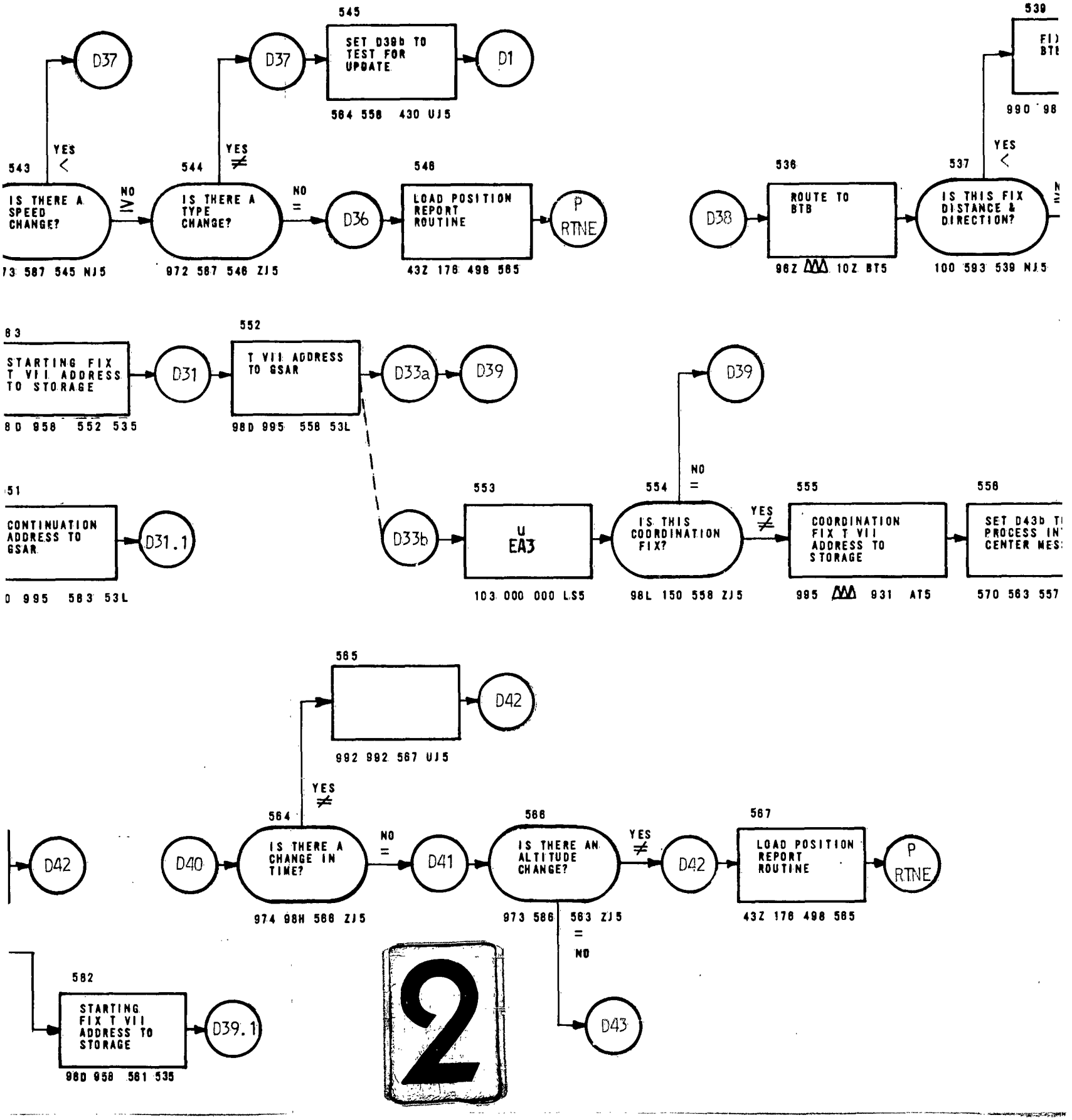
545
SET D38b TO TEST FOR UPDATE
D37
D37
D1
564 558 430 UJ5
539
990 98
YES
<
543
IS THERE A SPEED CHANGE?
NO
≥
544
IS THERE A TYPE CHANGE?
YES
≠
NO
=
D36
546
LOAD POSITION REPORT ROUTINE
P RTNE
73 587 545 NJ5
972 587 546 ZJ5
43Z 176 498 565
536
ROUTE TO BTB
D38
96Z 10Z BT5
537
IS THIS FIX DISTANCE & DIRECTION?
YES
<
100 593 539 NJ5
83
STARTING FIX T VII ADDRESS TO STORAGE
D31
552
T VII ADDRESS TO GSAR
D33a
D39
8D 958 552 535
98D 995 558 53L
51
CONTINUATION ADDRESS TO GSAR
D31.1
0 995 583 53L
D33b
553
U
EA3
103 000 000 LS5
554
IS THIS COORDINATION FIX?
NO
=
D39
YES
≠
555
COORDINATION FIX T VII ADDRESS TO STORAGE
995 931 AT5
558
SET D43b T
PROCESS IN
CENTER MES
570 563 557
565
D42
992 992 567 UJ5
YES
≠
564
IS THERE A CHANGE IN TIME?
NO
=
D41
566
IS THERE AN ALTITUDE CHANGE?
YES
≠
D42
567
LOAD POSITION REPORT ROUTINE
P RTNE
D42
D40
974 98H 566 ZJ5
973 566
563 ZJ5
=
NO
43Z 176 498 565
D43
582
STARTING FIX T VII ADDRESS TO STORAGE
D39.1
98D 958 581 535
2

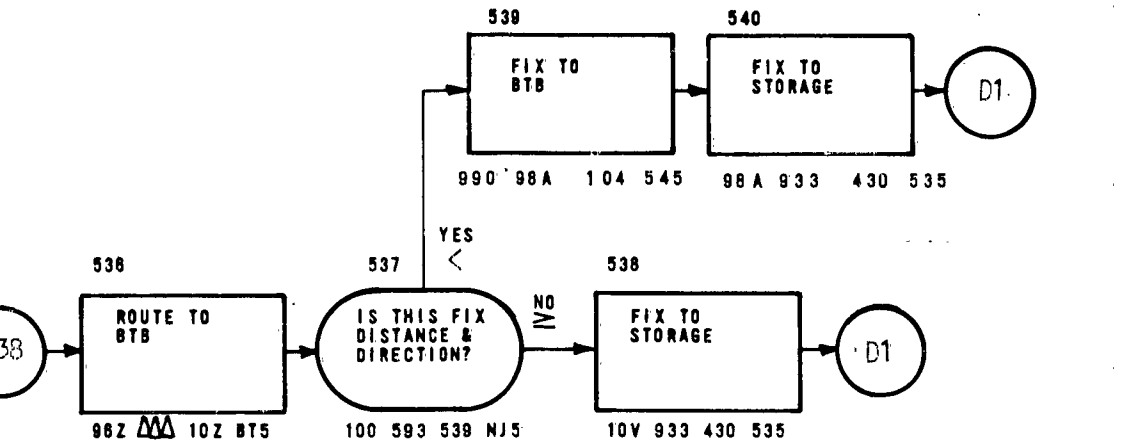

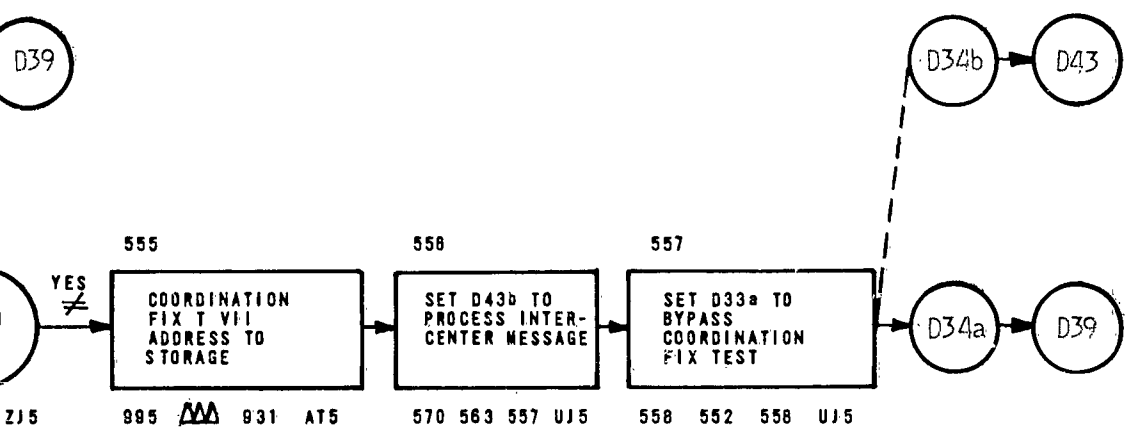

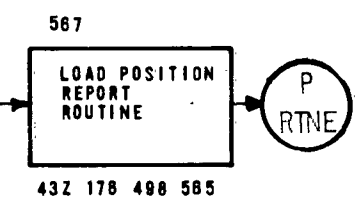

PAGES 5 & 6 REPLACE PAGE 4 WHEN UPDATING ROUTINES ARE IN USE.

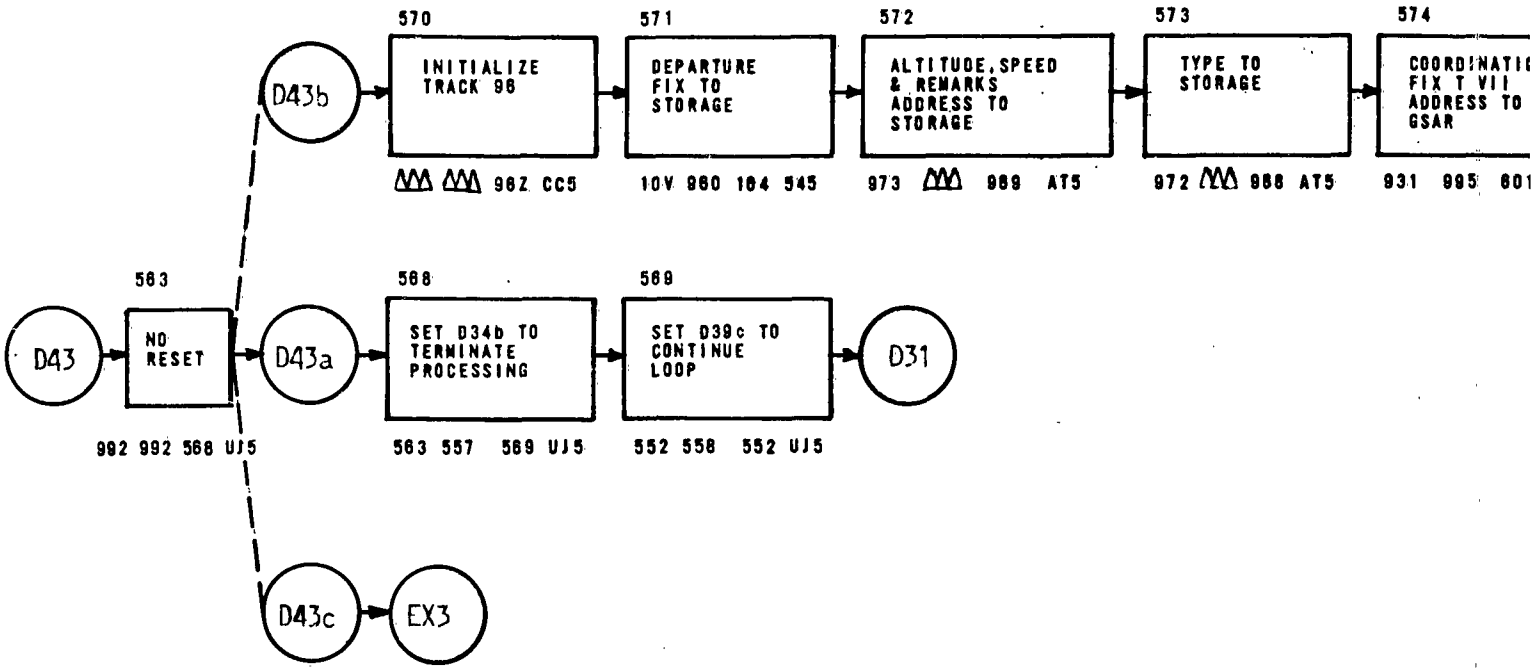
D43
563
NO RESET
992 992 568 UJ5
D43b
570
INITIALIZE TRACK 96
96Z CC5
571
DEPARTURE FIX TO STORAGE
10V 860 164 545
572
ALTITUDE, SPEED & REMARKS ADDRESS TO STORAGE
973 969 AT5
573
TYPE TO STORAGE
972 968 AT5
574
931 995
D43a
568
SET D34b TO TERMINATE PROCESSING
563 557 569 UJ5
569
SET D39c TO CONTINUE LOOP
552 558 552 UJ5
D31
D43c
EX3

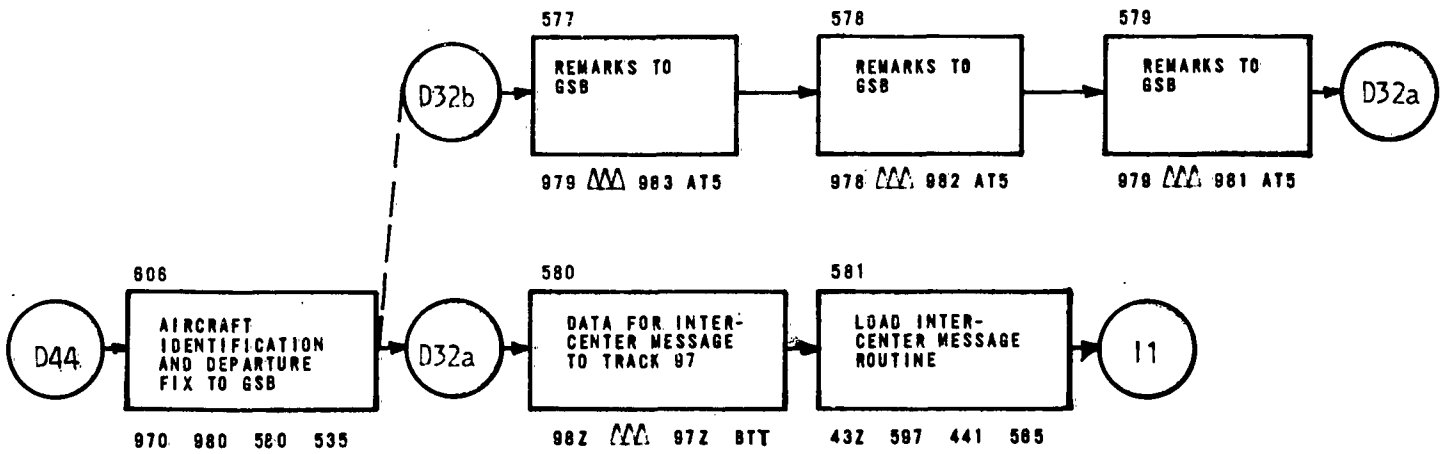
D44
606
AIRCRAFT IDENTIFICATION AND DEPARTURE FIX TO GSB
970 980 580 535
D32b
577
REMARKS TO GSB
979 983 AT5
578
REMARKS TO GSB
978 982 AT5
579
REMARKS TO GSB
979 981 AT5
D32a
D32a
580
DATA FOR INTER-CENTER MESSAGE TO TRACK 97
98Z 97Z BTT
581
LOAD INTER-CENTER MESSAGE ROUTINE
43Z 597 441 565
I1

1

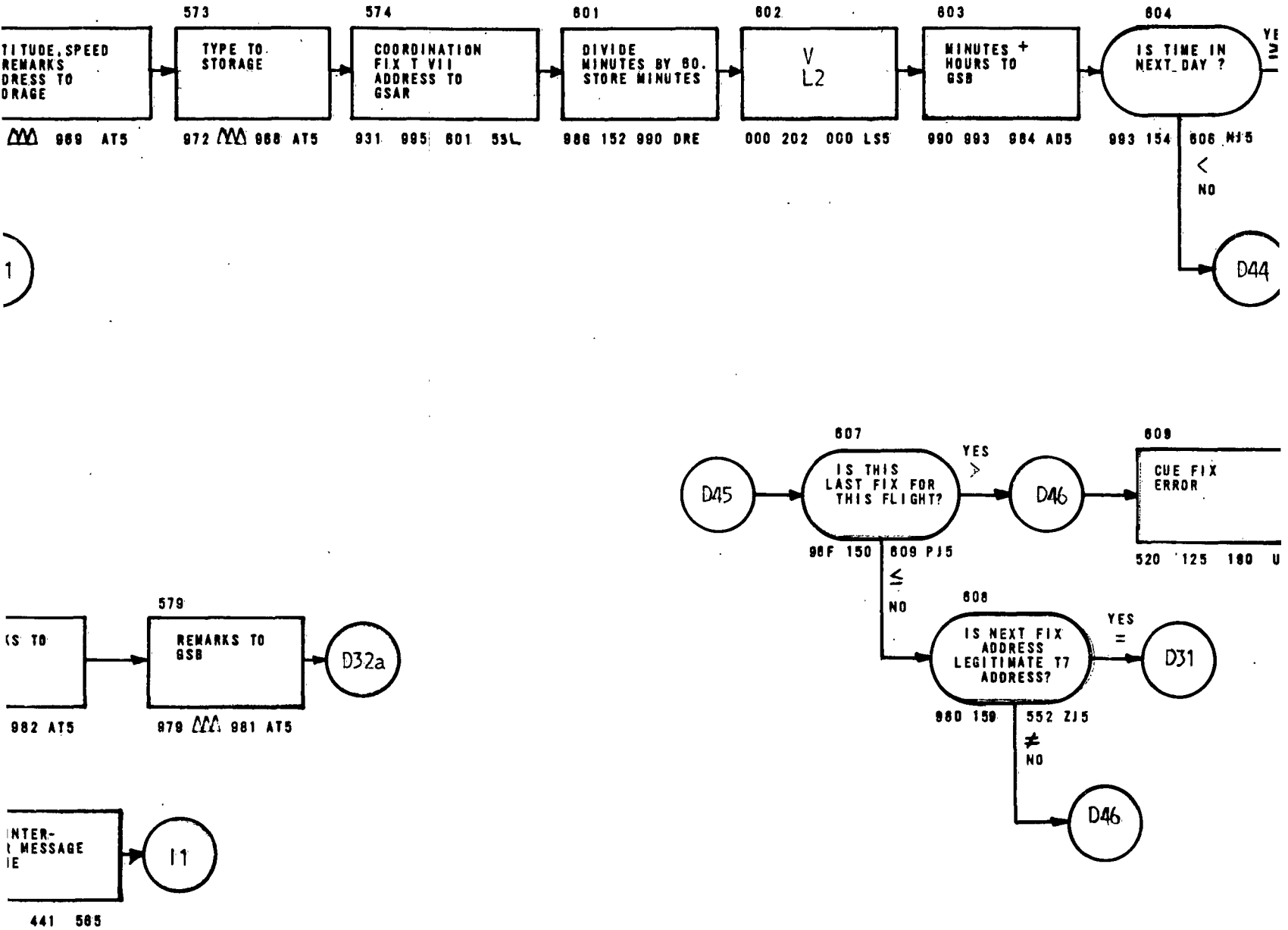

TITUDE, SPEED
REMARKS
DRESS TO
ORAGE
969 AT5
573
TYPE TO STORAGE
972 968 AT5
574
COORDINATION FIX T VII ADDRESS TO GSAR
931 995 601 53L
601
DIVIDE MINUTES BY 60. STORE MINUTES
986 152 990 DRE
602
V
L2
000 202 000 LS5
603
MINUTES + HOURS TO GSB
990 993 984 AD5
604
IS TIME IN NEXT DAY ?
993 154 606 NJ5
<
NO
D44
1
607
IS THIS LAST FIX FOR THIS FLIGHT?
YES
>
D46
609
CUE FIX ERROR
520 125 180 U
D45
98F 150 609 PJ5
≤
NO
608
IS NEXT FIX ADDRESS LEGITIMATE T7 ADDRESS?
YES
=
D31
980 159 552 ZJ5
≠
NO
D46
579
REMARKS TO GSB
D32a
979 981 AT5
982 AT5
INTER-
MESSAGE
I1
441 565

2

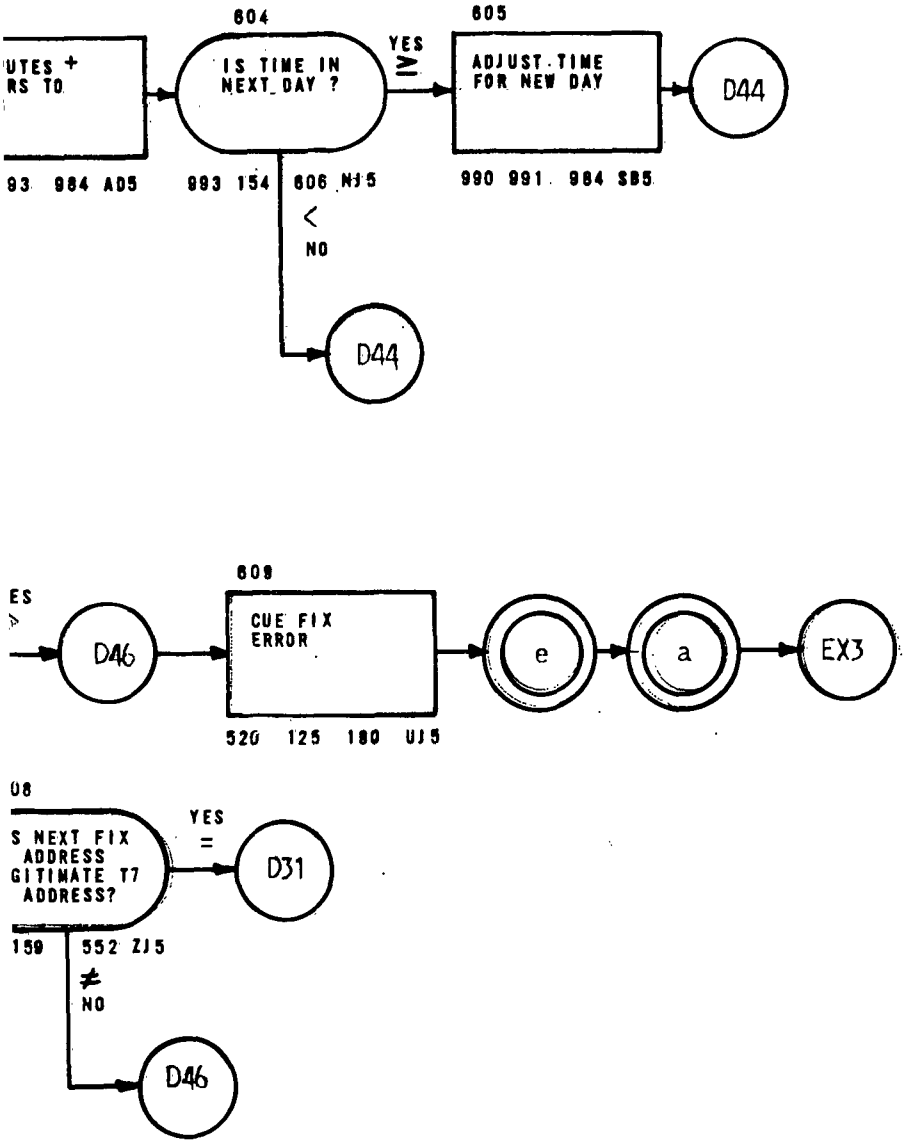

PAGES 5 & 6 REPLACE PAGE 4 FOR OPERATION WITH UPDATING ROUTINES.

WORKING STORAGE LOCATIONS

931	Δ	Δ	Δ	Δ	X	X	X	X	X	X	X	Δ	COORDINATION FIX T VII ADDRESS.
933	Δ	Δ	Δ	Δ	Δ	Δ	Δ	Δ	X	X	X	X	ROUTE CHANGE STARTING FIX.
940	Δ	Δ	Δ	Δ	Δ	Δ	Δ	Δ	X	X	X	X	FLIGHT PLAN STARTING FIX.
942	Δ	Δ	Δ	Δ	X	X	X	X	X	X	X	Δ	T II ADDRESS.
958	Δ	Δ	Δ	Δ	X	X	X	X	X	X	X	Δ	STARTING T VII ADDRESS FOR UPDATE.

NOTE 1: THE REMARKS BESIDE THE CONSTANTS, FACTORS AND WORKING STORAGES DEFINE THE PRIME PURPOSE AS USED IN THIS ROUTINE. THE FLOW CHARTS WILL DEFINE ANY SECONDARY USAGE OF THESE LOCATIONS.

NOTE 2: LOCATIONS 176, 931, 933 and 958 PERTAIN TO THE UPDATING AND POSITION REPORT ROUTINES.

CONSTANTS AND FACTORS

150	▲	Δ	Δ	Δ	Δ	Δ	Δ	Δ	Δ	Δ	Δ	Δ	SPACES COMPARATOR
151	i	i	i	i	i	i	P	i	i	i	i	i	PROPOSED COMPARATOR
152	Ø	Ø	Ø	Ø	Ø	Ø	Ø	Ø	Ø	6	Ø	Δ	TIME CONVERSION FACTOR
153	Ø	Ø	Ø	Ø	3	1	2	Ø	Ø	Ø	Ø	Ø	REMARKS TABLE MODIFIER
154	Δ	Δ	Δ	Δ	Δ	Δ	Δ	2	4	Ø	Ø	Δ	TIME ADJUSTMENT CONSTANT
159	i	i	i	i	5	0	i	i	i	i	i	i	T VII ADDRESS COMPARATOR
161	Ø	Ø	Ø	Ø	1	Ø	1	Ø	Ø	Ø	Ø	Ø	T I ADDRESS MODIFIER
173	6	8	Z	Δ	Ø	1	1	2	Ø	Ø	Ø	Δ	AIRWAY ROUTINE LOAD FACTOR
176	8	9	Z	Δ	Ø	1	1	8	Ø	4	Ø	Δ	POSITION REPORT ROUTINE LOAD FACTOR
177	8	5	Z	Δ	Ø	1	1	6	6	Ø	Ø	Δ	CANCELLATION AND ERASE ROUTINE LOAD FACTOR
183	8	Ø	Z	Δ	Ø	1	1	4	6	Ø	Ø	Δ	DIRECT ROUTINE LOAD FACTOR
586	i	i	i	i	i	.	.	.	i	i	i	i	PAD COMPARATOR
587	i	i	i	i	i	i	i	i	.	.	.	i	PAD COMPARATOR
588	i	i	i	i	i	i	E	i	i	i	i	i	ENROUTE COMPARATOR
590	i	i	i	i	i	i	i	i	i	i	i	i	IGNORES FACTOR
591	i	i	i	i	i	i	i	i	i	i	P	i	PRINT COMPARATOR
592	i	i	i	i	D	i	i	i	i	i	i	i	DIRECT ROUTE TEST COMPARATOR
593	i	.	i	i	i	i	i	i	i	i	i	i	DIRECT ROUTE TEST COMPARATOR
594	i	i	i	i	.	i	i	i	i	i	i	i	DIRECT ROUTE TEST COMPARATOR
597	5	1	Z	Δ	Ø	1	1	4	4	Ø	Ø	Δ	INTER-CENTER MESSAGE ROUTINE LOAD FACTOR
598	i	i	i	i	i	i	i	.	i	i	i	i	PAD COMPARATOR

APPENDIX XIII

CONTINUATION ROUTINE

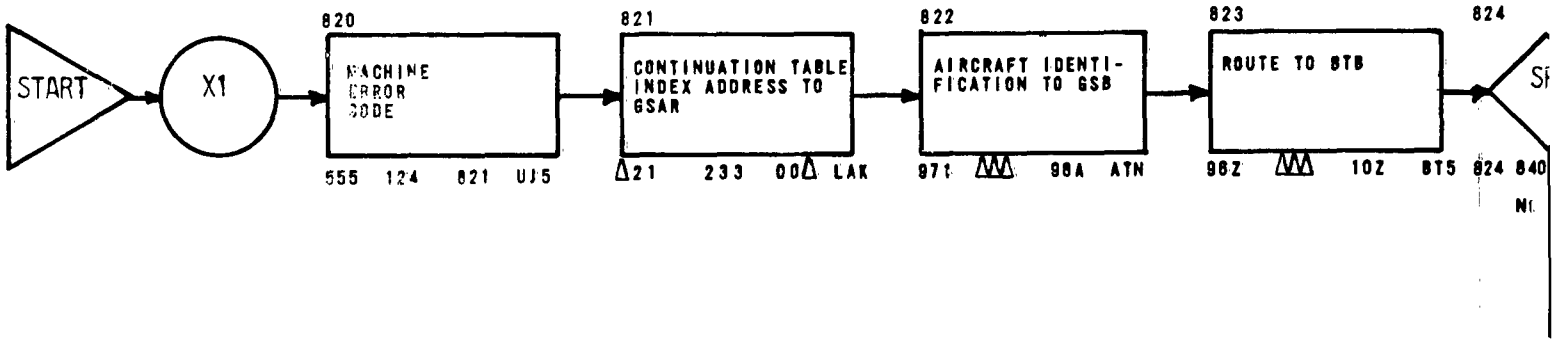
START
X1
820
MACHINE ERROR CODE
555 124 821 UJ5
821
CONTINUATION TABLE INDEX ADDRESS TO GSAR
Δ21 233 00Δ LAK
822
AIRCRAFT IDENTIFICATION TO GSB
971 98A ATN
823
ROUTE TO BTB
96Z 10Z BT5
824
824 840

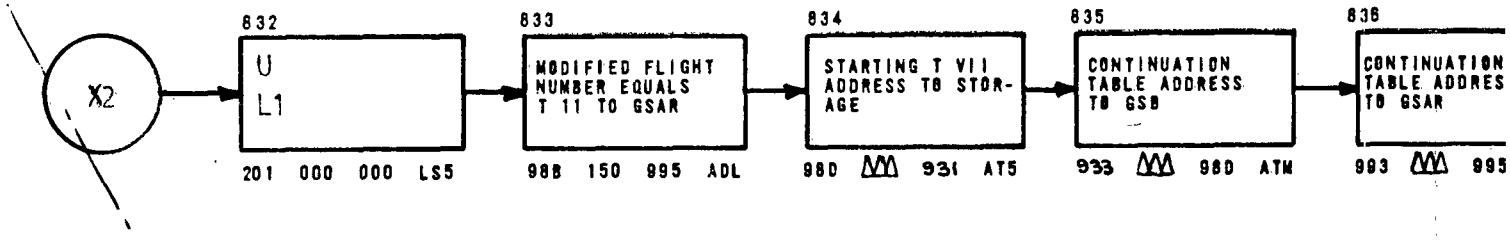
X2
832
U
L1
201 000 000 LS5
833
MODIFIED FLIGHT NUMBER EQUALS T 11 TO GSAR
988 150 995 ADL
834
STARTING T VII ADDRESS TO STORAGE
98D 931 AT5
835
CONTINUATION TABLE ADDRESS TO GSB
933 98D ATM
836
CONTINUATION TABLE ADDRES TO GSAR
993 995

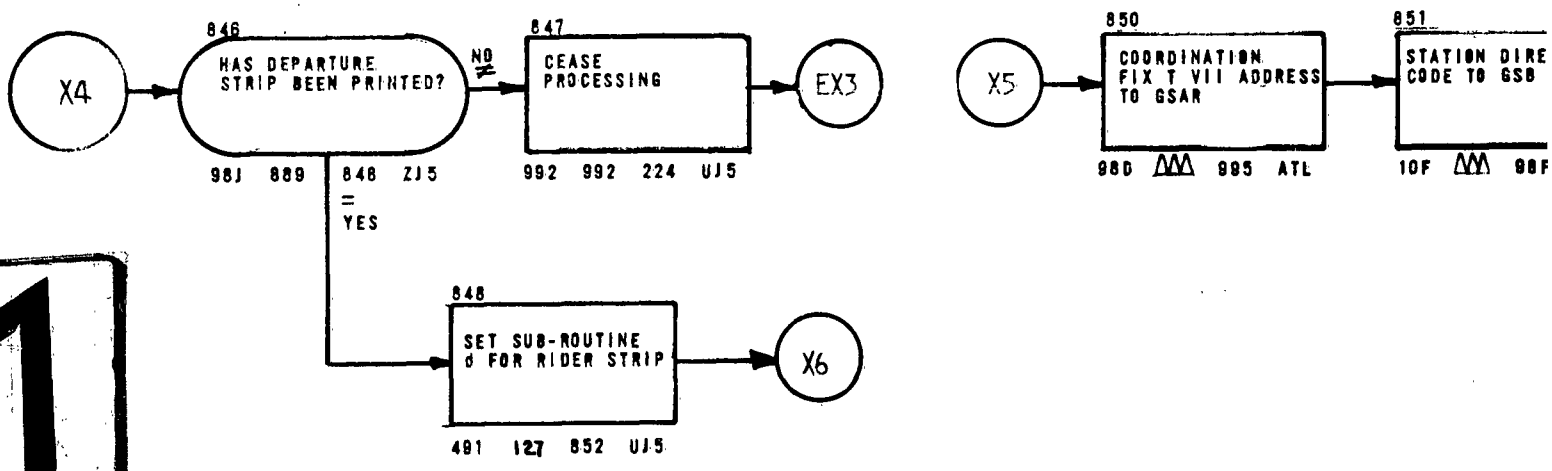
X4
846
HAS DEPARTURE STRIP BEEN PRINTED?
98J 889 846 ZJ5
NO ≠
847
CEASE PROCESSING
992 992 224 UJ5
EX3
= YES
848
SET SUB-ROUTINE d FOR RIDER STRIP
491 127 852 UJ5
X6
X5
850
COORDINATION FIX T VII ADDRESS TO GSAR
98D 995 ATL
851
STATION DIRE CODE TO GSB
10F 98F

1

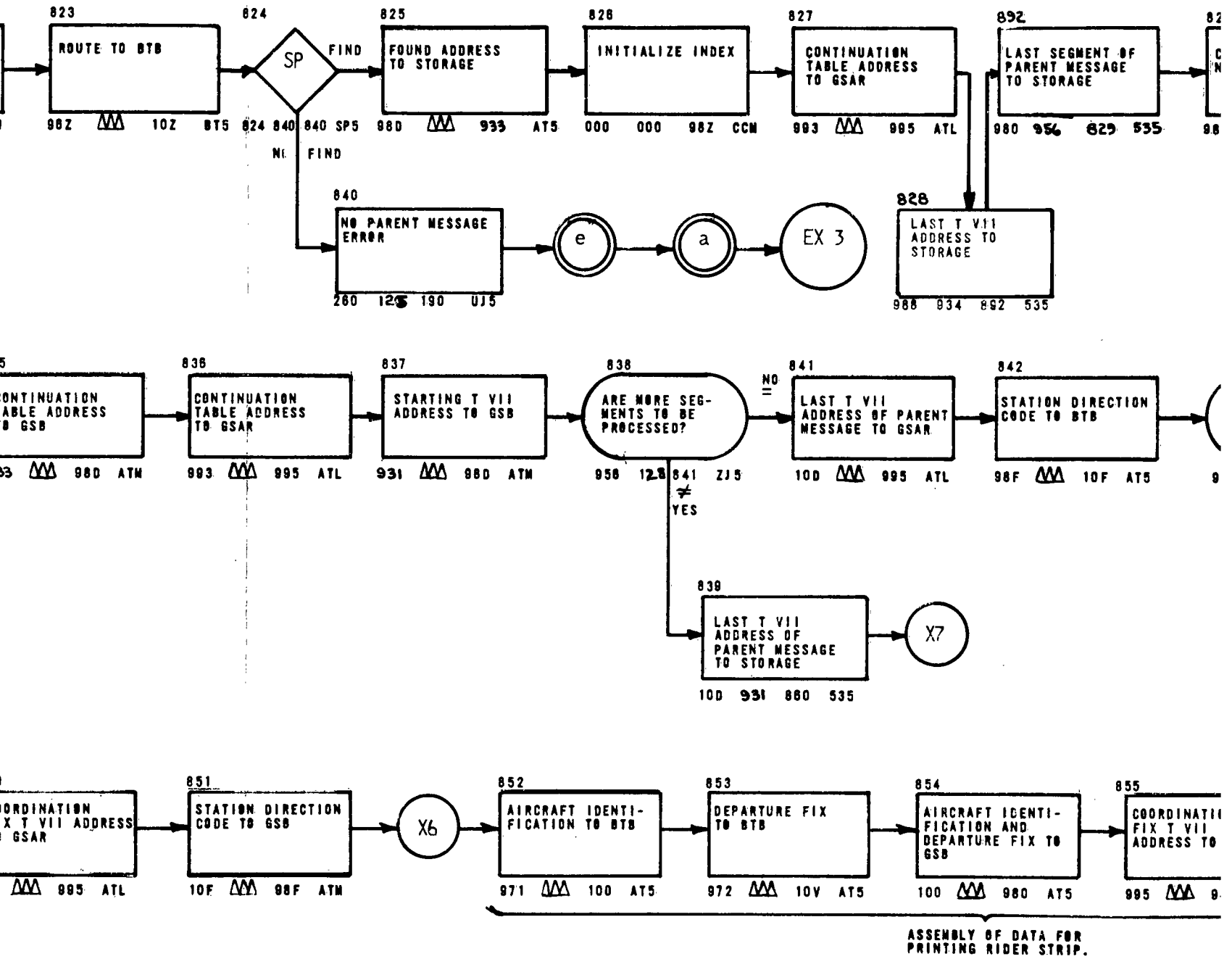
823
ROUTE TO BTB
98Z 10Z BT5
824
SP
FIND
NO FIND
824 840 840 SP5
825
FOUND ADDRESS TO STORAGE
98D 933 AT5
826
INITIALIZE INDEX
000 000 98Z CCM
827
CONTINUATION TABLE ADDRESS TO GSAR
993 995 ATL
892
LAST SEGMENT OF PARENT MESSAGE TO STORAGE
980 956 829 535
840
NO PARENT MESSAGE ERROR
260 125 190 UJ5
e
a
EX 3
828
LAST T VII ADDRESS TO STORAGE
988 934 892 535
836
CONTINUATION TABLE ADDRESS TO GSAR
993 995 ATL
837
STARTING T VII ADDRESS TO GSB
931 98D ATM
838
ARE MORE SEGMENTS TO BE PROCESSED?
958 125 841 ZJ5
NO
=
841
LAST T VII ADDRESS OF PARENT MESSAGE TO GSAR
10D 995 ATL
842
STATION DIRECTION CODE TO BTB
98F 10F AT5
≠
YES
839
LAST T VII ADDRESS OF PARENT MESSAGE TO STORAGE
10D 931 860 535
X7
995 ATL
851
STATION DIRECTION CODE TO GSB
10F 98F ATM
X6
852
AIRCRAFT IDENTIFICATION TO BTB
971 100 AT5
853
DEPARTURE FIX TO BTB
972 10V AT5
854
AIRCRAFT IDENTIFICATION AND DEPARTURE FIX TO GSB
100 980 AT5
855
995
ASSEMBLY OF DATA FOR PRINTING RIDER STRIP.

2

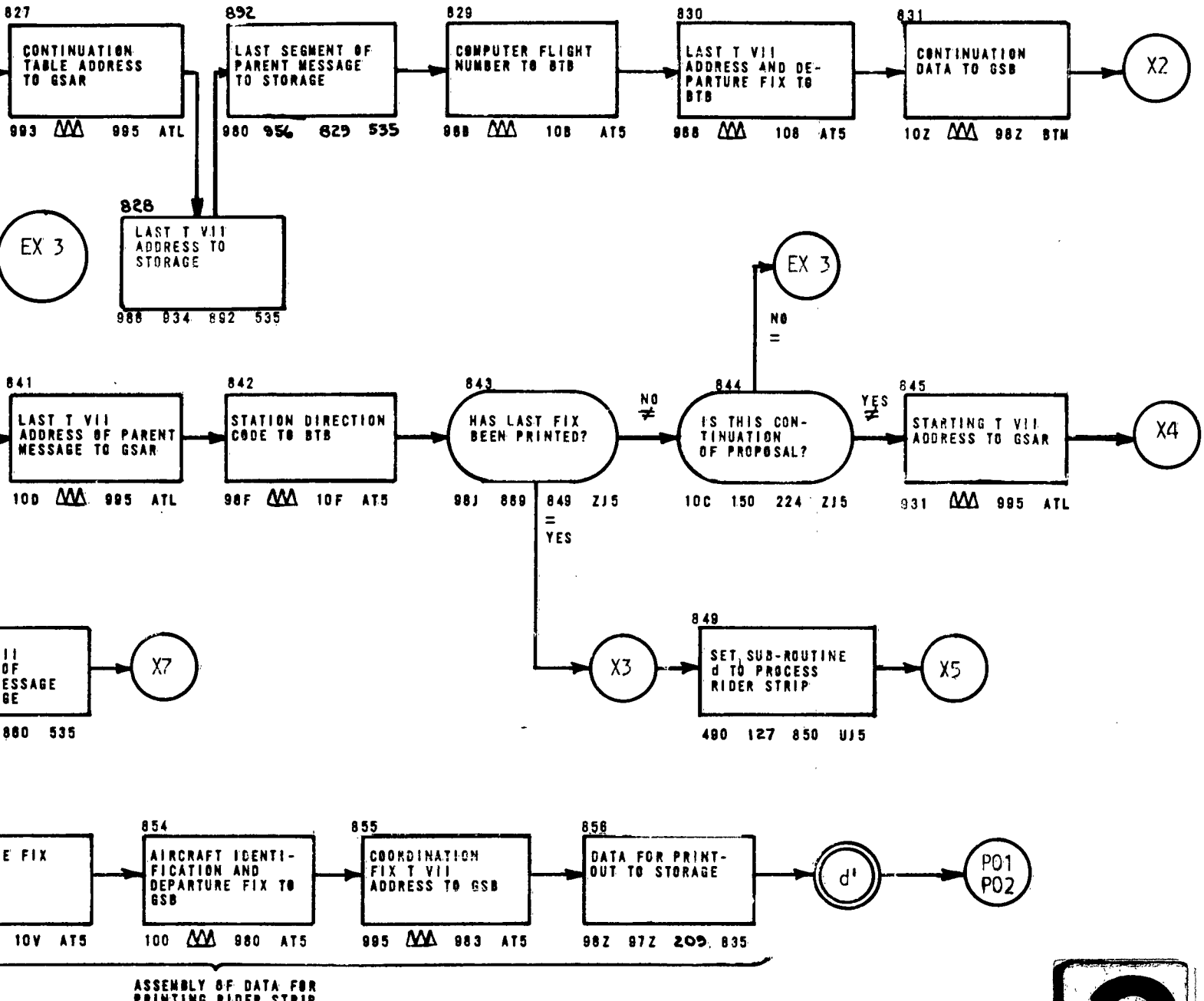
827
CONTINUATION TABLE ADDRESS TO GSAR
993 995 ATL
892
LAST SEGMENT OF PARENT MESSAGE TO STORAGE
980 956 829 535
829
COMPUTER FLIGHT NUMBER TO BTB
988 108 AT5
830
LAST T VII ADDRESS AND DEPARTURE FIX TO BTB
988 108 AT5
831
CONTINUATION DATA TO GSB
10Z 98Z BTM
X2
EX 3
828
LAST T VII ADDRESS TO STORAGE
988 934 892 535
EX 3
NO
=
841
LAST T VII ADDRESS OF PARENT MESSAGE TO GSAR
10D 995 ATL
842
STATION DIRECTION CODE TO BTB
98F 10F AT5
843
HAS LAST FIX BEEN PRINTED?
98J 869 849 ZJ5
=
YES
NO
≠
844
IS THIS CONTINUATION OF PROPOSAL?
10C 150 224 ZJ5
YES
≠
845
STARTING T VII ADDRESS TO GSAR
931 995 ATL
X4
II
OF
ESSAGE
GE
860 535
X7
X3
849
SET SUB-ROUTINE d TO PROCESS RIDER STRIP
490 127 850 UJ5
X5
E FIX
10V AT5
854
AIRCRAFT IDENTIFICATION AND DEPARTURE FIX TO GSB
100 980 AT5
855
COORDINATION FIX T VII ADDRESS TO GSB
995 983 AT5
856
DATA FOR PRINT-OUT TO STORAGE
98Z 97Z 209 835
d'
P01
P02
ASSEMBLY OF DATA FOR PRINTING RIDER STRIP.

3

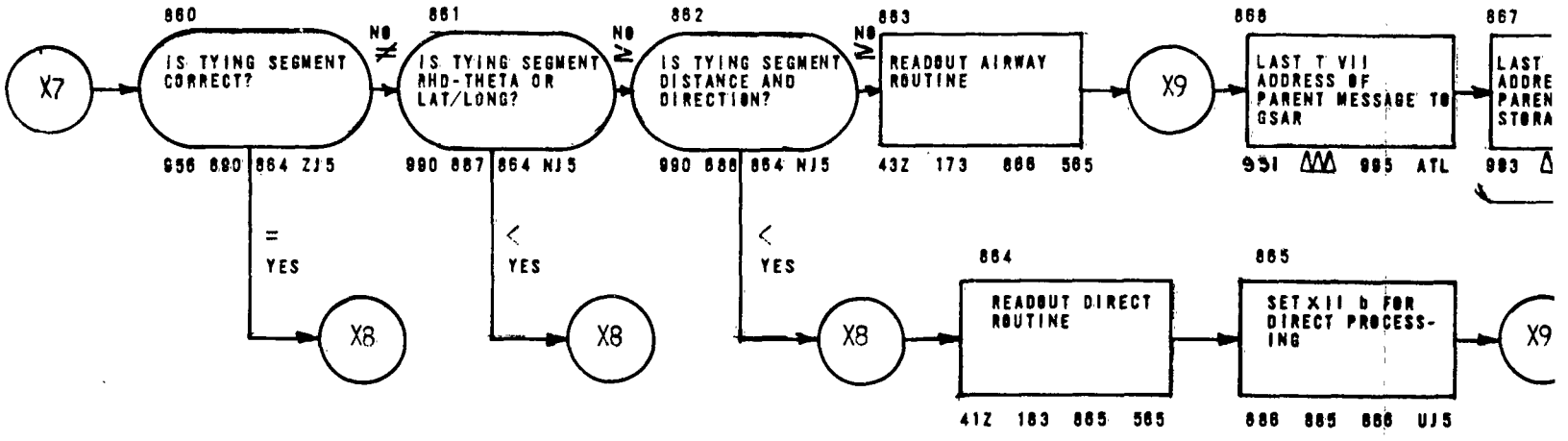
X7
860
IS TYING SEGMENT CORRECT?
956 890 864 ZJ5
NO ≠
861
IS TYING SEGMENT RHO-THETA OR LAT/LONG?
990 887 864 NJ5
NO ≠
862
IS TYING SEGMENT DISTANCE AND DIRECTION?
990 888 864 NJ5
NO ≠
863
READOUT AIRWAY ROUTINE
432 173 866 565
X9
868
LAST T VII ADDRESS OF PARENT MESSAGE TO GSAR
931 ΔΔΔ 995 ATL
867
LAST ADDRE PAREN STORA
993 Δ
= YES
X8
< YES
X8
< YES
X8
864
READOUT DIRECT ROUTINE
412 183 865 565
865
SET XII b FOR DIRECT PROCESS-ING
886 885 866 UJ5
X9

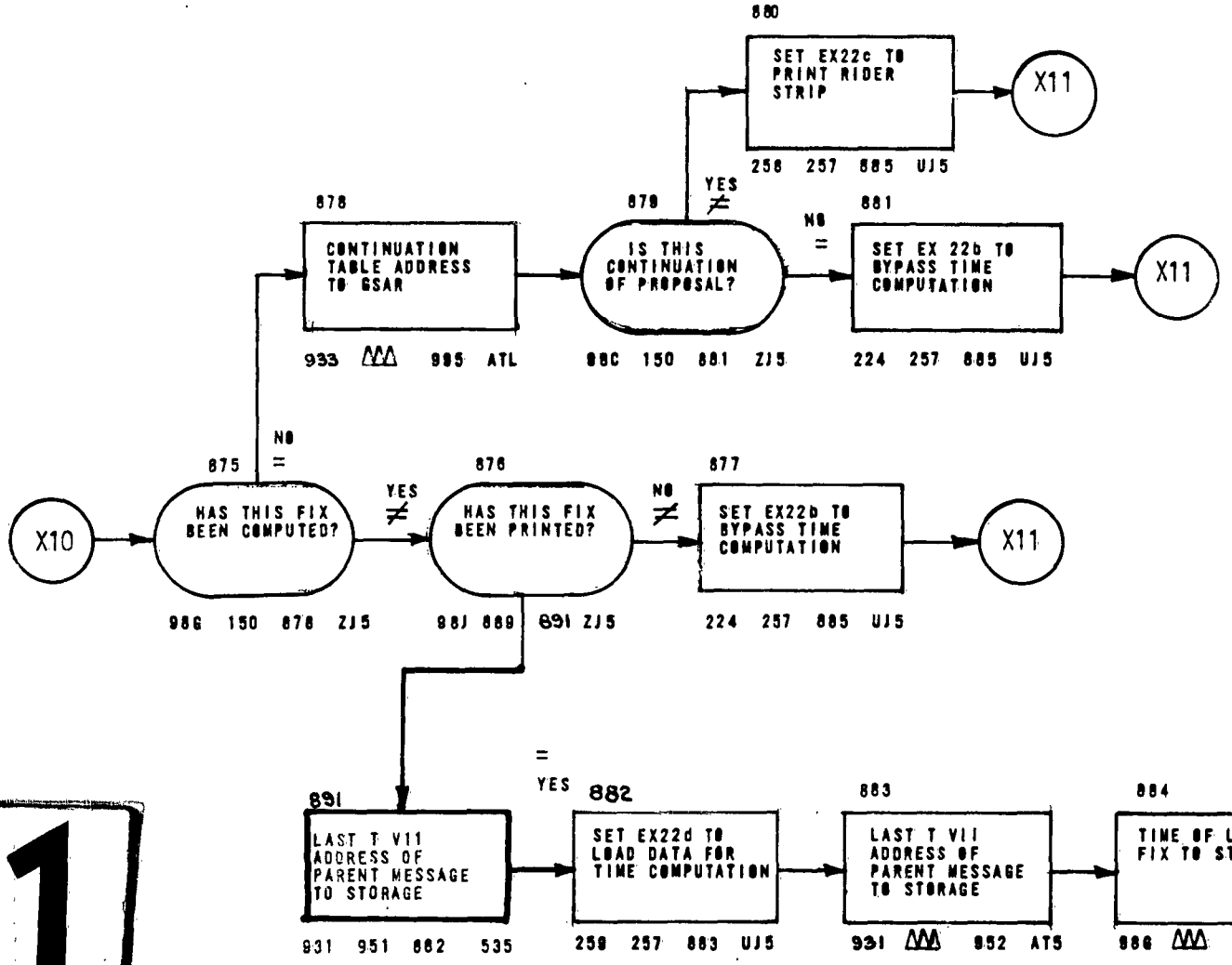
X10
875
HAS THIS FIX BEEN COMPUTED?
986 150 876 ZJ5
NO =
YES ≠
876
HAS THIS FIX BEEN PRINTED?
981 889 891 ZJ5
NO ≠
877
SET EX22b TO BYPASS TIME COMPUTATION
224 257 885 UJ5
X11
878
CONTINUATION TABLE ADDRESS TO GSAR
933 ΔΔΔ 995 ATL
879
IS THIS CONTINUATION OF PROPOSAL?
880 150 881 ZJ5
YES ≠
880
SET EX22c TO PRINT RIDER STRIP
258 257 885 UJ5
X11
NO =
881
SET EX 22b TO BYPASS TIME COMPUTATION
224 257 885 UJ5
X11
= YES
891
LAST T V11 ADDRESS OF PARENT MESSAGE TO STORAGE
931 951 862 535
882
SET EX22d TO LOAD DATA FOR TIME COMPUTATION
258 257 883 UJ5
883
LAST T VII ADDRESS OF PARENT MESSAGE TO STORAGE
931 ΔΔΔ 952 AT5
884
TIME OF LAST FIX TO STORAGE
886 ΔΔΔ 976 AT5
X11

1

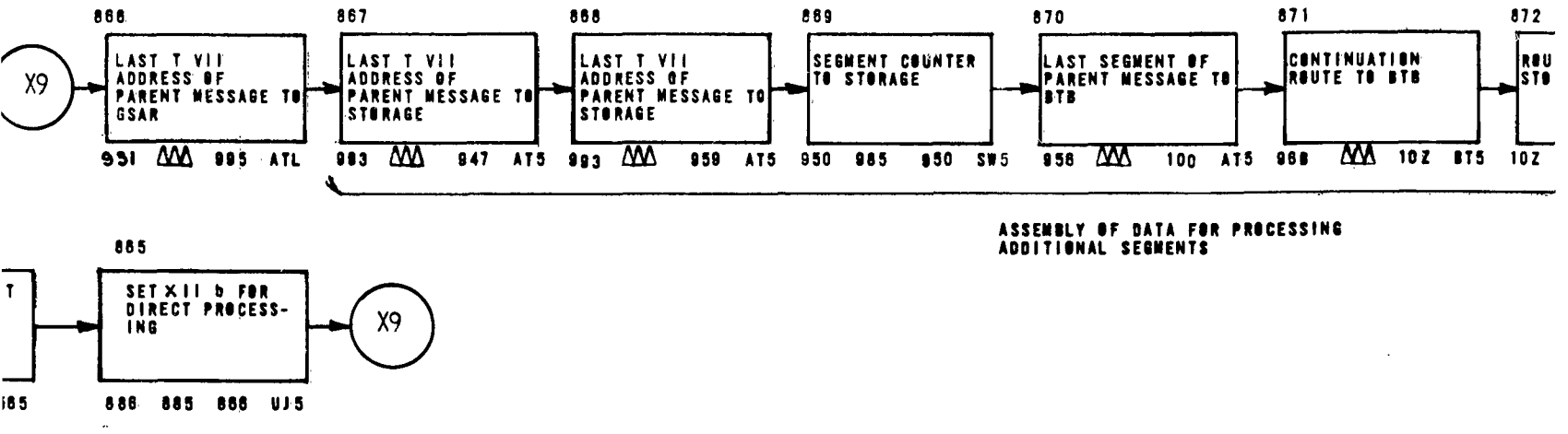
X9
866
LAST T VII ADDRESS OF PARENT MESSAGE TO GSAR
931 995 ATL
867
LAST T VII ADDRESS OF PARENT MESSAGE TO STORAGE
983 947 AT5
868
LAST T VII ADDRESS OF PARENT MESSAGE TO STORAGE
993 959 AT5
869
SEGMENT COUNTER TO STORAGE
950 985 850 SW5
870
LAST SEGMENT OF PARENT MESSAGE TO BTB
958 100 AT5
871
CONTINUATION ROUTE TO BTB
968 10Z BT5
872
10Z
ASSEMBLY OF DATA FOR PROCESSING ADDITIONAL SEGMENTS

865
SET X11 b FOR DIRECT PROCESSING
X9
886 885 868 UJ5

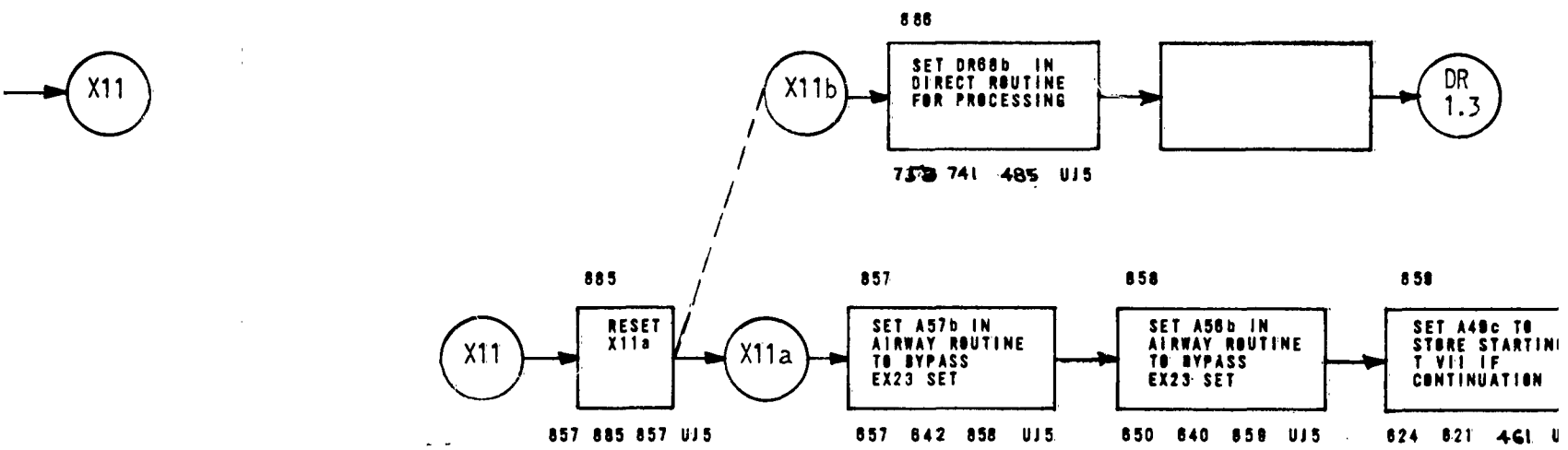
X11
X11b
886
SET DR68b IN DIRECT ROUTINE FOR PROCESSING
741 485 UJ5
DR 1.3
X11
885
RESET X11a
857 885 857 UJ5
X11a
857
SET A57b IN AIRWAY ROUTINE TO BYPASS EX23 SET
857 842 858 UJ5
858
SET A56b IN AIRWAY ROUTINE TO BYPASS EX23 SET
850 840 858 UJ5
859
SET A49c TO STORE STARTING T VII IF CONTINUATION
624 821 461

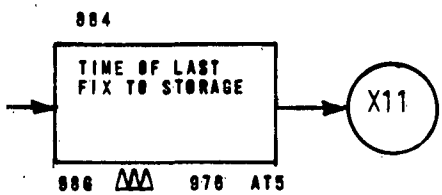
884
TIME OF LAST FIX TO STORAGE
986 976 AT5
X11

2

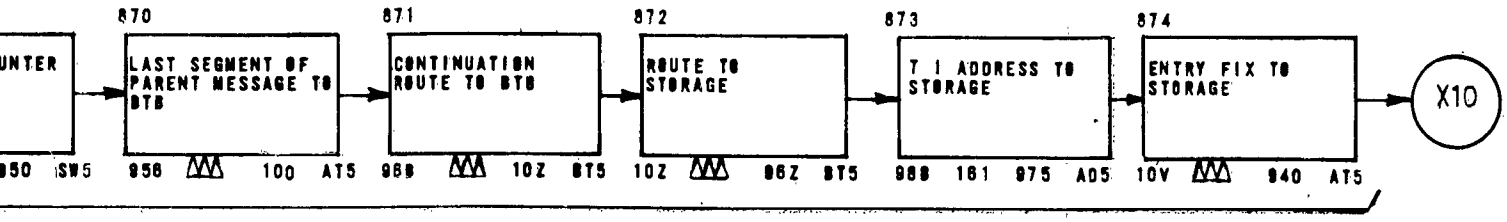

ASSEMBLY OF DATA FOR PROCESSING
ADDITIONAL SEGMENTS

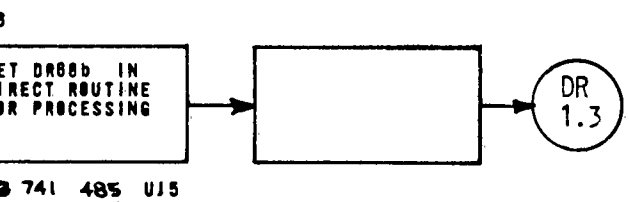

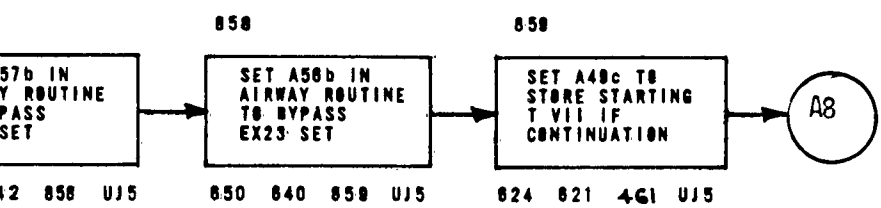

CONSTANTS AND FACTORS

150	Δ	Δ	Δ	Δ	Δ	Δ	Δ	Δ	Δ	Δ	Δ	Δ	"SPACES" COMPARATOR
161	Ø	Ø	Ø	Ø	1	Ø	1	Ø	Ø	Ø	Ø	Δ	TI MODIFIER
173	6	8	Z	Δ	Ø	1	1	2	Ø	Ø	Ø	Δ	AIRWAY ROUTINE LOAD FACTOR
183	8	Ø	Z	Δ	Ø	1	1	4	6	Ø	Ø	Δ	DIRECT ROUTINE LOAD FACTOR
887	i	i	i	i	•	i	i	i	i	i	i	i	DIRECT ROUTE TEST COMPARATOR
888	i	•	i	i	i	i	i	i	i	i	i	i	DIRECT ROUTE TEST COMPARATOR
889	i	i	i	i	i	i	i	i	i	i	P	i	PRINT COMPARATOR
890	i	i	i	i	D	i	i	i	i	i	i	i	DIRECT ROUTE TEST COMPARATOR

WORKING STORAGE LOCATIONS

920	Δ	Δ	Δ	Δ	X	X	X	X	X	X	X	Δ	START T VII ADDRESS OF PARENT MESSAGE
940	Δ	Δ	Δ	Δ	Δ	Δ	Δ	Δ	X	X	X	X	ENTRY FIX
946	Δ	Δ	Δ	Δ	X	X	X	X	X	X	X	Δ	CONTINUATION TABLE ADDRESS
947	Δ	Δ	Δ	Δ	X	X	X	X	X	X	X	Δ	LAST T VII ADDRESS OF PARENT MESSAGE
950	Δ	Δ	Δ	Δ	Δ	Δ	X	X	X	Δ	Δ	Δ	SEGMENT COUNTER
952	Δ	Δ	Δ	Δ	X	X	X	X	X	X	X	Δ	LAST T VII ADDRESS OF PARENT MESSAGE
956	X	X	X	X	X	X	X	X	X	X	X	X	LAST SEGMENT OF PARENT MESSAGE
959	Δ	Δ	Δ	Δ	X	X	X	X	X	X	X	Δ	LAST T VII ADDRESS OF PARENT MESSAGE

APPENDIX XIV

CANCELLATION ROUTINE

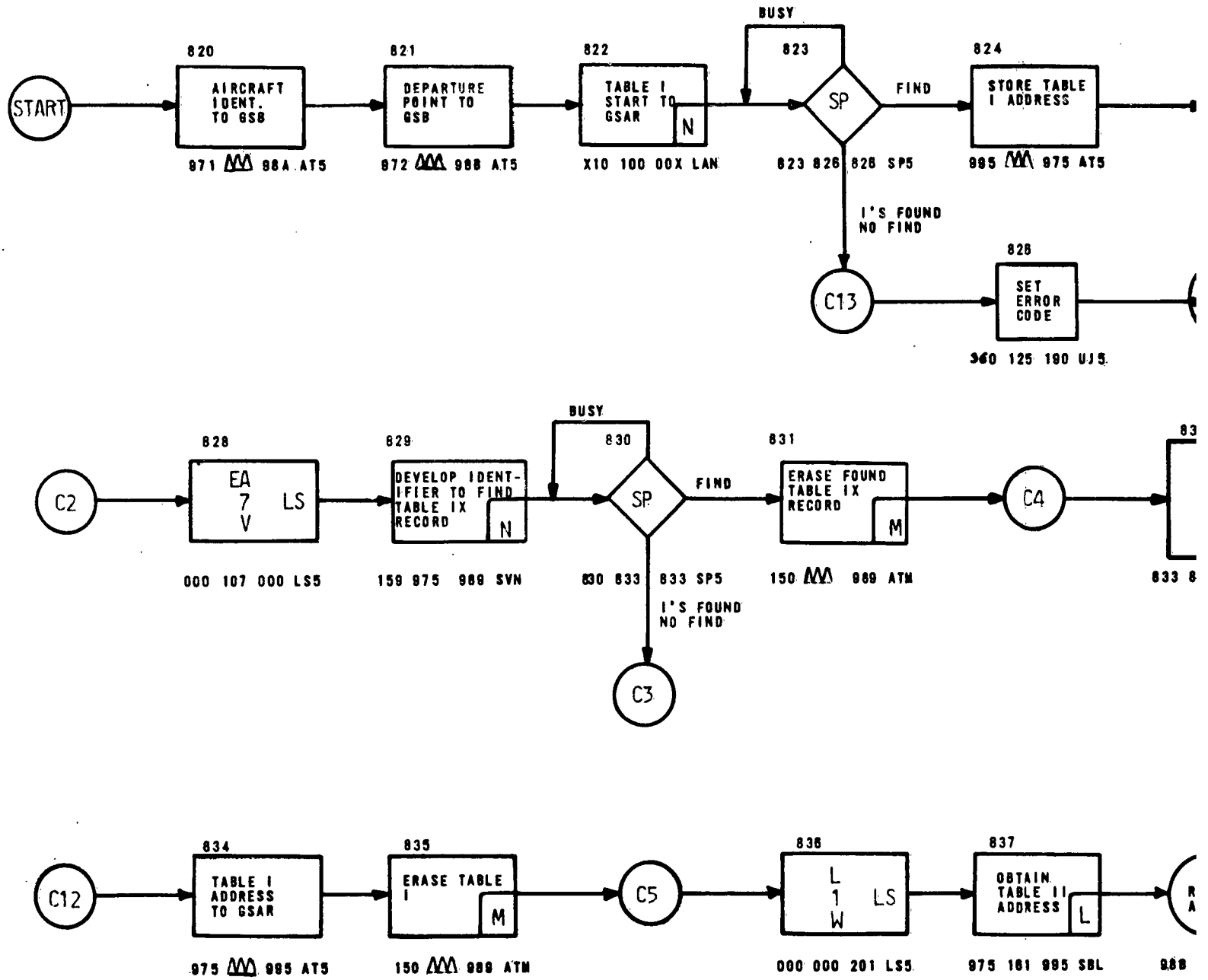
START
820
AIRCRAFT IDENT. TO GSB
971 98A AT5
821
DEPARTURE POINT TO GSB
972 988 AT5
822
TABLE I START TO GSAR
N
X10 100 00X LAN
BUSY
823
SP
823 826 828 SP5
FIND
824
STORE TABLE I ADDRESS
995 975 AT5
I'S FOUND NO FIND
C13
828
SET ERROR CODE
360 125 190 UJ5
C2
828
EA 7 V LS
000 107 000 LS5
829
DEVELOP IDENT-IFIER TO FIND TABLE IX RECORD
N
159 975 989 SVN
BUSY
830
SP
830 833 833 SP5
FIND
831
ERASE FOUND TABLE IX RECORD
M
150 989 ATM
C4
833 8
I'S FOUND NO FIND
C3
C12
834
TABLE I ADDRESS TO GSAR
975 995 AT5
835
ERASE TABLE I
M
150 989 ATM
C5
836
L 1 W LS
000 000 201 LS5
837
OBTAIN TABLE II ADDRESS
L
975 161 995 SBL
988

1

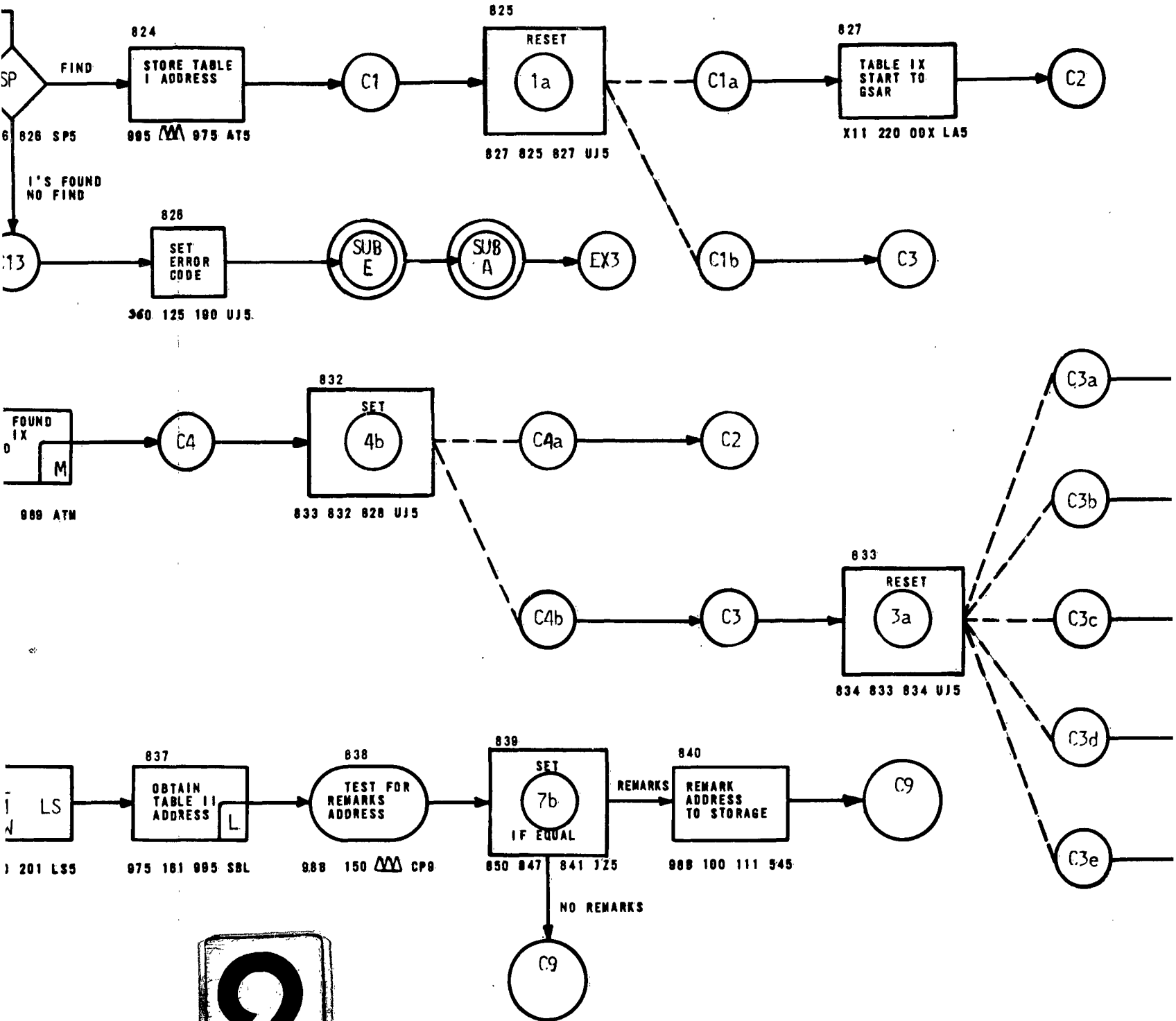
SP
FIND
824
STORE TABLE I ADDRESS
995 975 AT5
C1
825
RESET
1a
827 825 827 UJ5
C1a
827
TABLE IX START TO GSAR
X11 220 00X LA5
C2
826 SP5
I'S FOUND
NO FIND
828
SET ERROR CODE
360 125 190 UJ5
SUB E
SUB A
EX3
C1b
C3
FOUND IX
M
989 ATM
C4
832
SET
4b
833 832 828 UJ5
C4a
C2
C4b
C3
833
RESET
3a
834 833 834 UJ5
C3a
C3b
C3c
C3d
C3e
LS
201 LS5
837
OBTAIN TABLE II ADDRESS
L
975 181 995 SBL
838
TEST FOR REMARKS ADDRESS
988 150 CP9
839
SET
7b
IF EQUAL
850 847 841 125
REMARKS
840
REMARK ADDRESS TO STORAGE
988 100 111 545
C9
NO REMARKS
C9

2

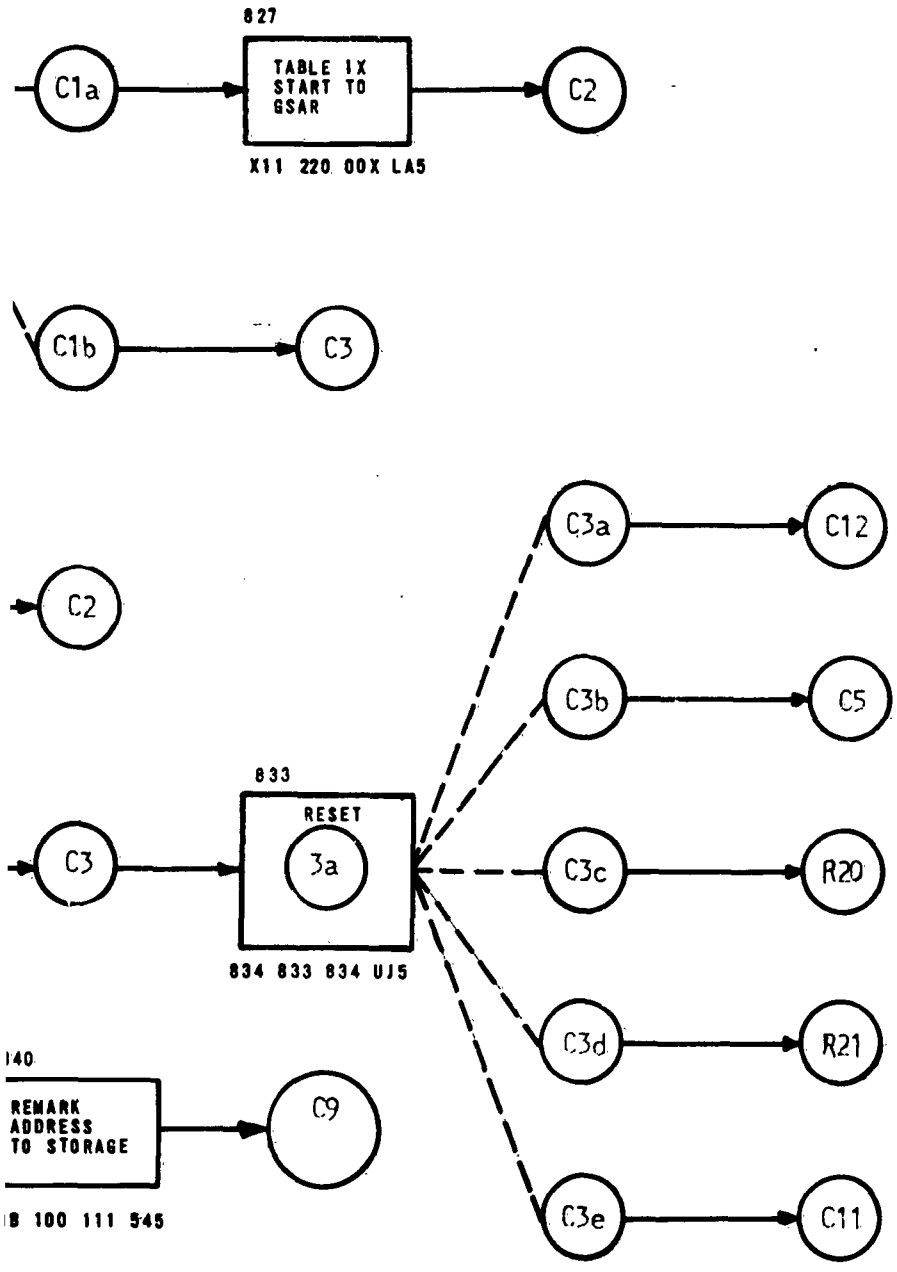
827
C1a
TABLE IX
START TO
GSAR
C2
X11 220 00X LA5
C1b
C3
C2
C3a
C12
C3b
C5
833
RESET
C3
3a
C3c
R20
834 833 834 UJ5
C3d
R21
140
REMARK
ADDRESS
TO STORAGE
C9
B 100 111 545
C3e
C11

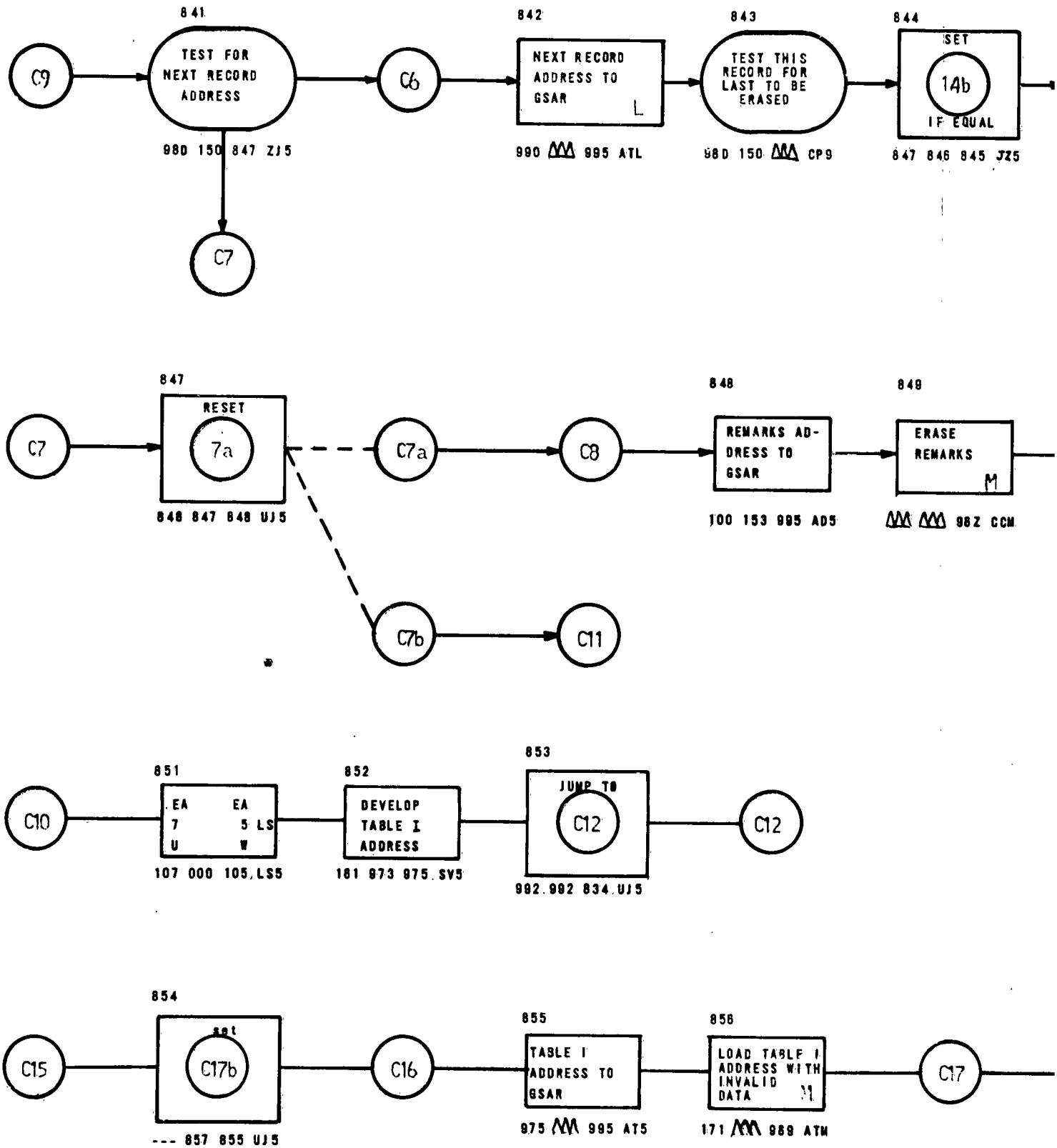
841
C9
TEST FOR NEXT RECORD ADDRESS
980 150 847 ZJ5
C7
C6
842
NEXT RECORD ADDRESS TO GSAR
L
990 995 ATL
843
TEST THIS RECORD FOR LAST TO BE ERASED
980 150 CP9
844
SET
14b
IF EQUAL
847 846 845 JZ5
847
C7
RESET
7a
848 847 848 UJ5
C7a
C8
848
REMARKS AD-DRESS TO GSAR
100 153 995 AD5
849
ERASE REMARKS
M
98Z CCM
C7b
C11
851
C10
EA 7 U
EA 5 LS W
107 000 105,LS5
852
DEVELOP TABLE I ADDRESS
181 973 975.SV5
853
JUMP TO
C12
992.992 834.UJ5
C12
854
C15
set
C17b
--- 857 855 UJ5
C16
855
TABLE I ADDRESS TO GSAR
975 995 AT5
856
LOAD TABLE I ADDRESS WITH INVALID DATA
M
171 989 ATM
C17

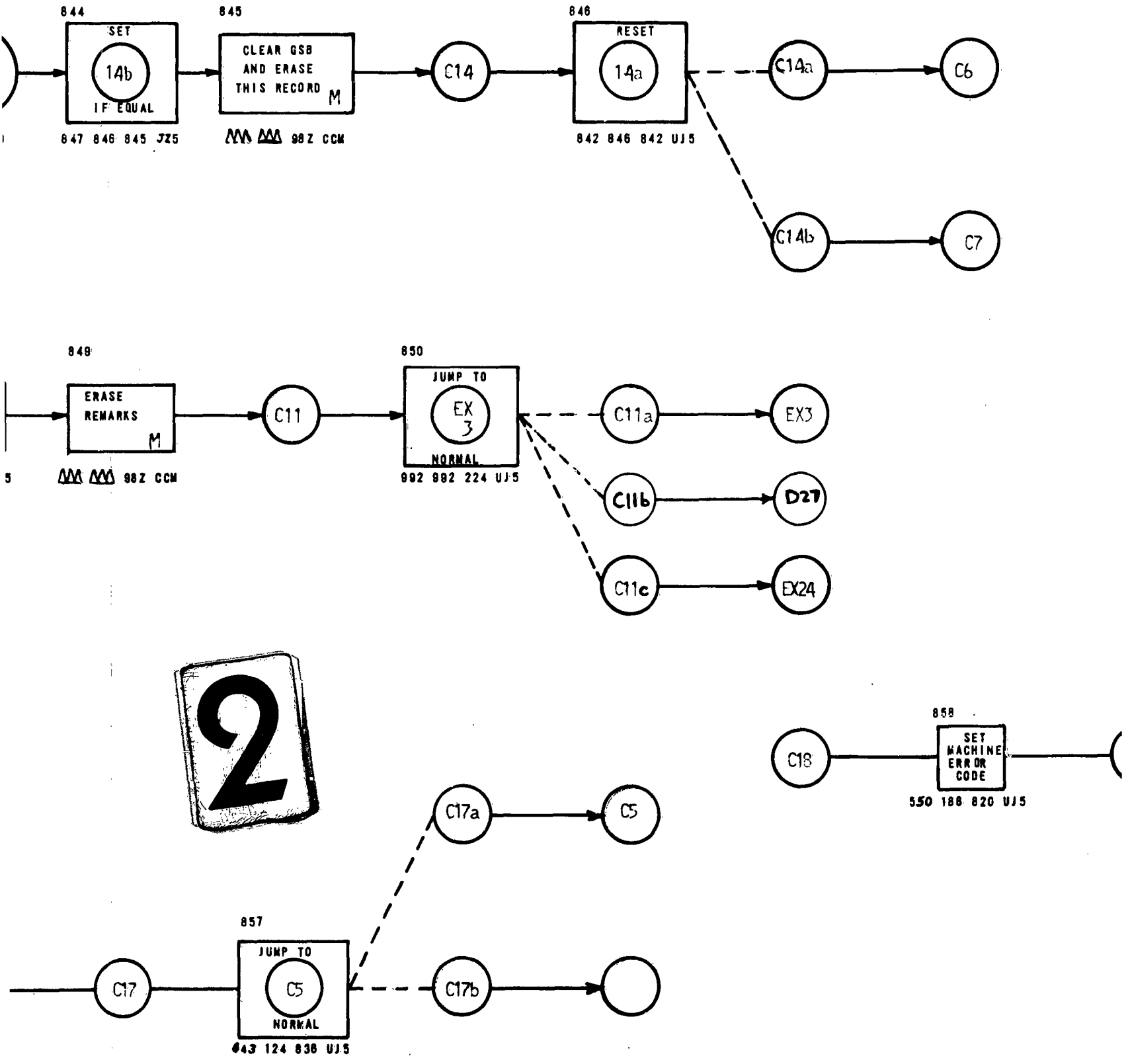
844
SET
14b
IF EQUAL
847 846 845 JZ5
845
CLEAR GSB
AND ERASE
THIS RECORD
M
98Z CCM
C14
846
RESET
14a
842 846 842 UJ5
C14a
C6
C14b
C7
849
ERASE
REMARKS
M
98Z CCM
C11
850
JUMP TO
EX
3
NORMAL
992 992 224 UJ5
C11a
EX3
C11b
D27
C11c
EX24
2
C18
858
SET
MACHINE
ERROR
CODE
550 188 820 UJ5
C17a
C5
857
JUMP TO
C5
NORMAL
643 124 836 UJ5
C17
C17b

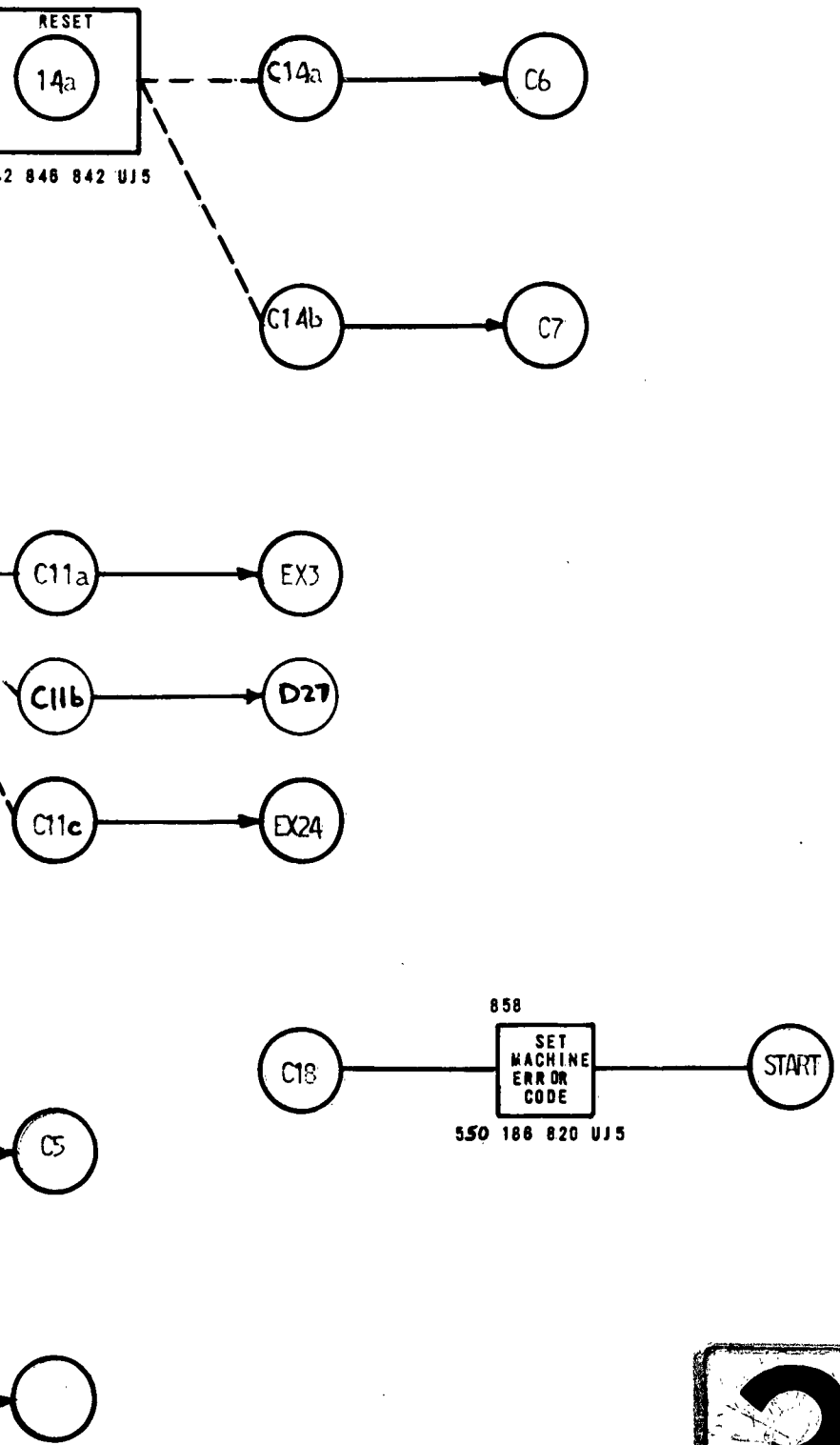
RESET
14a
2 846 842 UJ5
C14a
C6
C14b
C7
C11a
EX3
C11b
D27
C11c
EX24
858
C18
SET MACHINE ERROR CODE
START
550 186 820 UJ5
C5

CONSTANTS, FACTORS AND WORKING STORAGE FOR CANCELLATION AND ERASE ROUTINE.

1	5	0		Δ	Δ	Δ	Δ	Δ	Δ	Δ	Δ	Δ	Δ	Δ	Δ	COMPARATOR
1	5	9		i	i	i	X	X	X	i	i	i	i	i	i	USED TO EXTRACT THE 3 LOW-ORDER DIGITS OF THE TABLE I ADDRESS, IN THE "V" POSITION, TO SEARCH FOR TABLE IX RECORDS.
1	6	1		0	0	0	0	1	0	1	0	0	0	0	0	TABLE II MODIFIER
9	7	5		Δ	Δ	Δ	Δ	X	X	X	X	X	X	X	Δ	WORKING STORAGE FOR TABLE I ADDRESS.

* NOTE: THE REMARKS BESIDE THE ABOVE FACTORS, CONSTANTS AND WORKING STORAGES DEFINE THE PRIME PURPOSE AS USED IN THIS ROUTINE. THE FLOW CHARTS WILL DEFINE ANY SECONDARY USAGE OF THESE LOCATIONS.

APPENDIX XV

READOUT ROUTINE

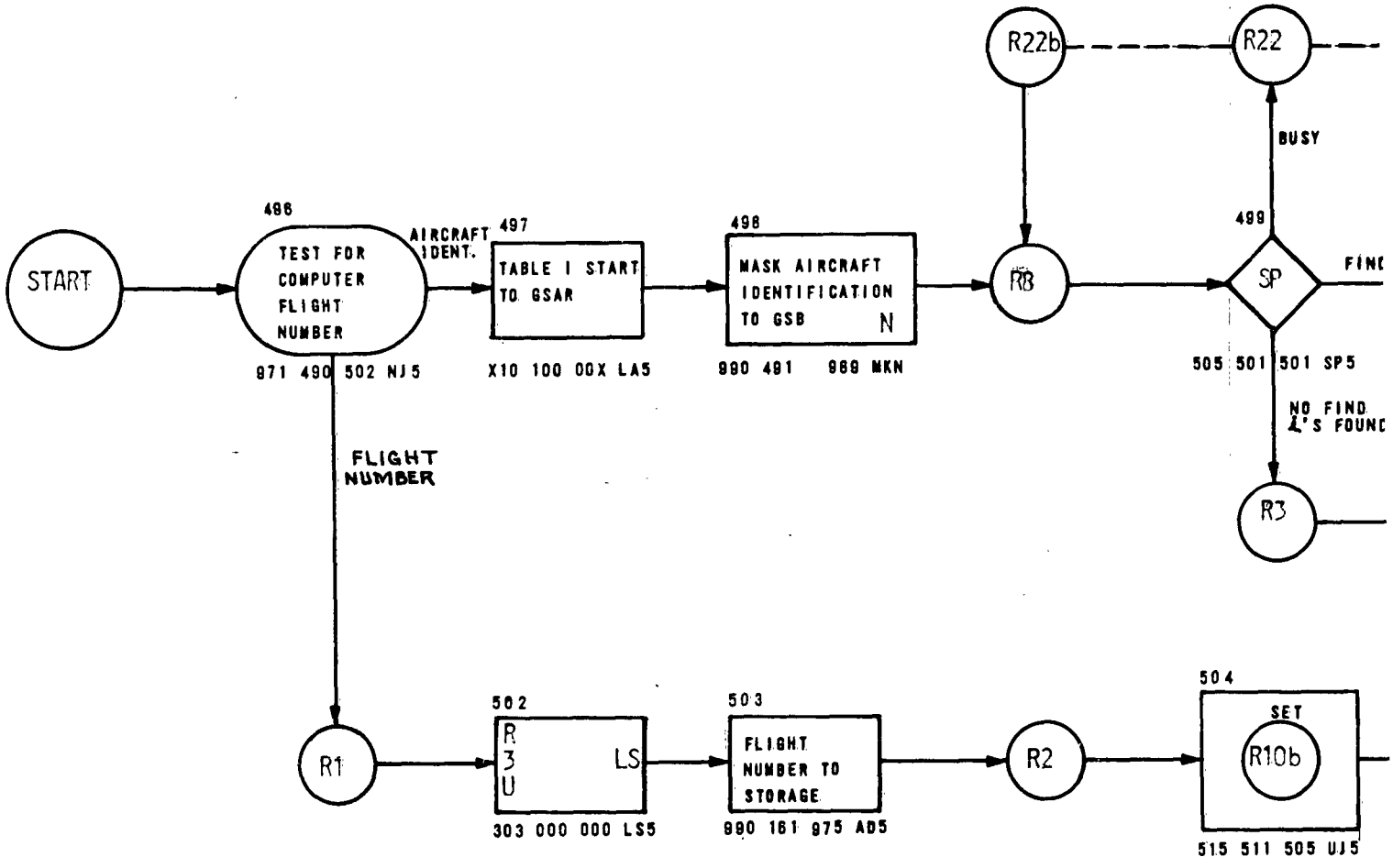
START
496
TEST FOR COMPUTER FLIGHT NUMBER
971 490 502 NJ5
AIRCRAFT IDENT.
497
TABLE I START TO GSAR
X10 100 00X LA5
498
MASK AIRCRAFT IDENTIFICATION TO GSB N
990 491 989 MKN
R22b
R22
BUSY
499
SP
FIND
505 501 501 SP5
NO FIND
R3
FLIGHT NUMBER
R1
502
R 3 U LS
303 000 000 LS5
503
FLIGHT NUMBER TO STORAGE
990 161 975 AD5
R2
504
SET
R10b
515 511 505 UJ5

1

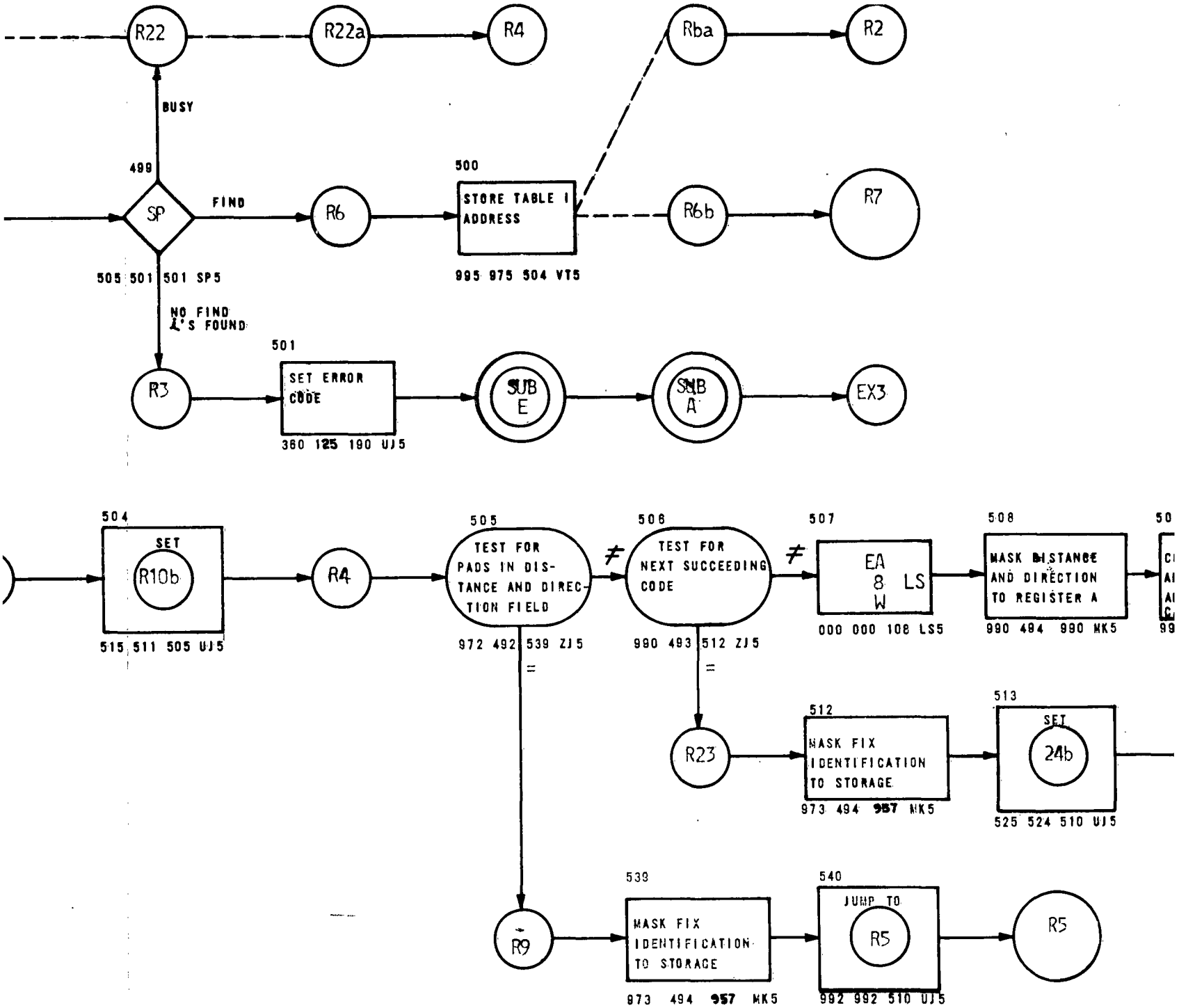
R22
R22a
R4
Rba
R2
BUSY
499
SP
FIND
R6
500
STORE TABLE I ADDRESS
R6b
R7
505 501 501 SP5
995 975 504 VT5
NO FIND
L'S FOUND
R3
501
SET ERROR CODE
360 125 190 UJ5
SUB E
SUB A
EX3
504
SET
R10b
515 511 505 UJ5
R4
505
TEST FOR PADS IN DISTANCE AND DIRECTION FIELD
972 492 539 ZJ5
506
TEST FOR NEXT SUCCEEDING CODE
990 493 512 ZJ5
507
EA 8 W LS
000 000 108 LS5
508
MASK DISTANCE AND DIRECTION TO REGISTER A
990 494 990 MK5
R23
512
MASK FIX IDENTIFICATION TO STORAGE
973 494 957 MK5
513
SET
24b
525 524 510 UJ5
R9
539
MASK FIX IDENTIFICATION TO STORAGE
973 494 957 MK5
540
JUMP TO
R5
992 992 510 UJ5
R5

2

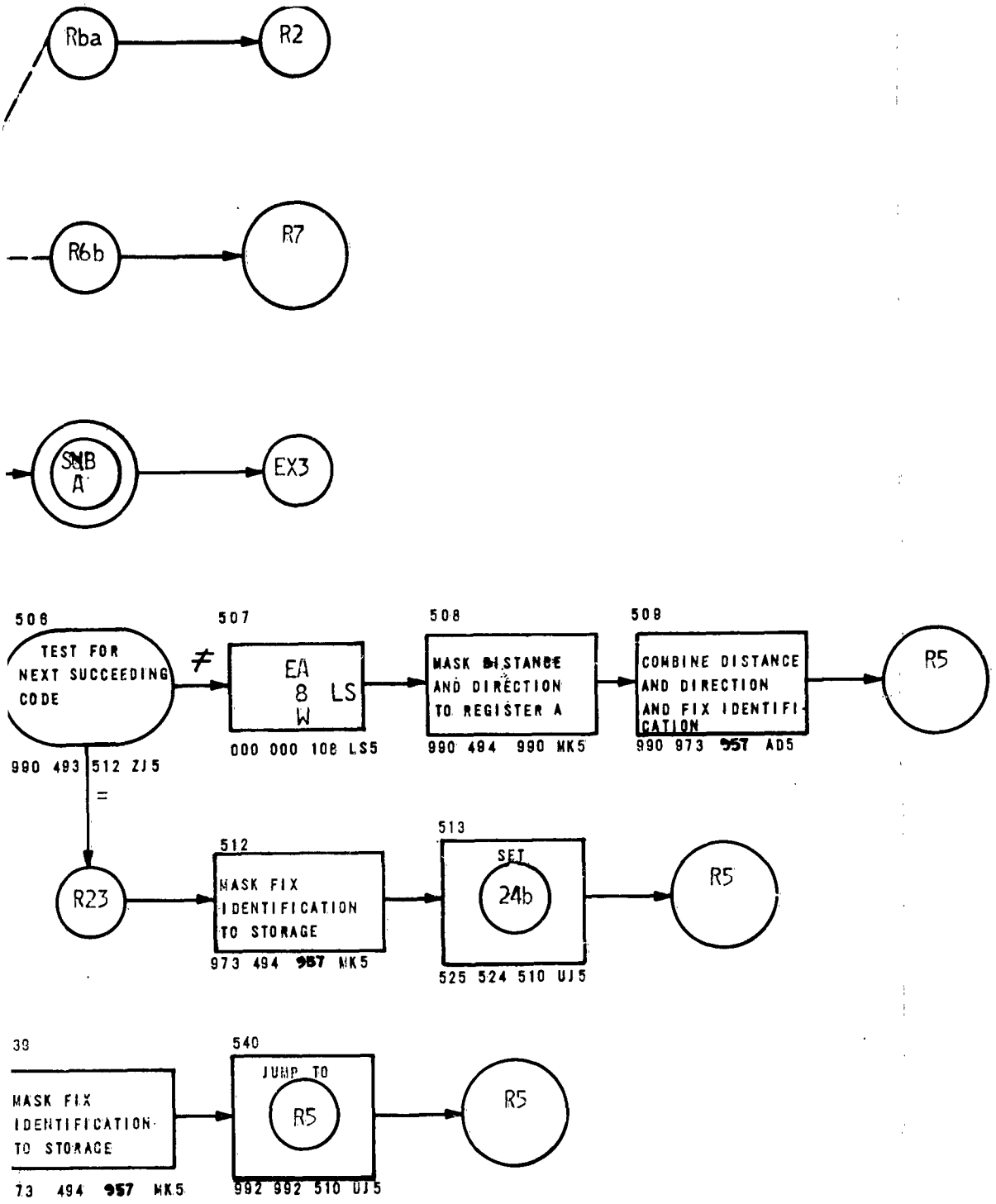
Rba
R2
R6b
R7
SUB
A
EX3
506
TEST FOR
NEXT SUCCEEDING
CODE
990 493 512 ZJ5
≠
=
507
EA
8
W
LS
000 000 108 LS5
508
MASK DISTANCE
AND DIRECTION
TO REGISTER A
990 494 990 MK5
509
COMBINE DISTANCE
AND DIRECTION
AND FIX IDENTIFI-
CATION
990 973 957 AD5
R5
R23
512
MASK FIX
IDENTIFICATION
TO STORAGE
973 494 957 MK5
513
SET
24b
525 524 510 UJ5
R5
39
MASK FIX
IDENTIFICATION
TO STORAGE
73 494 957 MK5
540
JUMP TO
R5
992 992 510 UJ5
R5

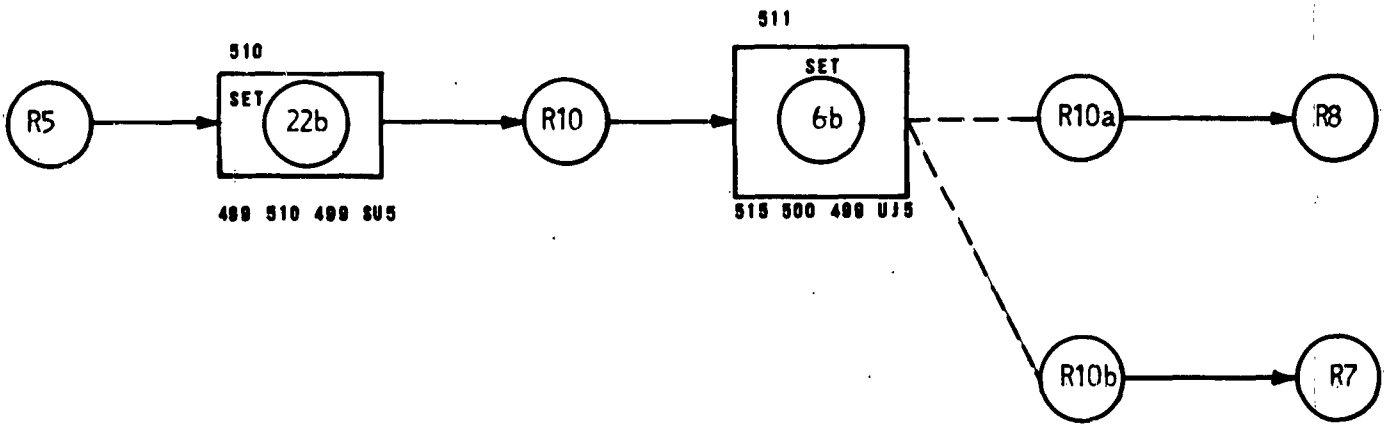
510
SET
22b
R5
R10
511
SET
6b
R10a
R8
R10b
R7
489 510 499 8U5
515 500 499 UJ5

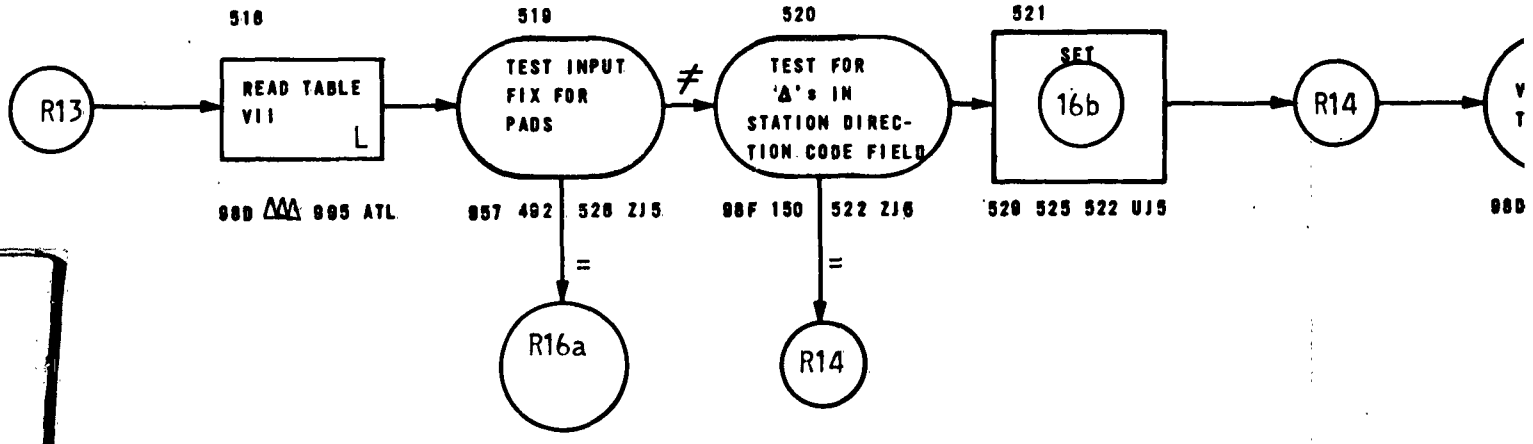
518
READ TABLE
VII
L
519
TEST INPUT
FIX FOR
PADS
≠
520
TEST FOR
'Δ's IN
STATION DIREC-
TION CODE FIELD
521
SET
16b
R13
R14
=
R16a
=
R14
98D ΔΔΔ 995 ATL
957 492 526 ZJ5
98F 150 522 ZJ6
529 525 522 UJ5

1

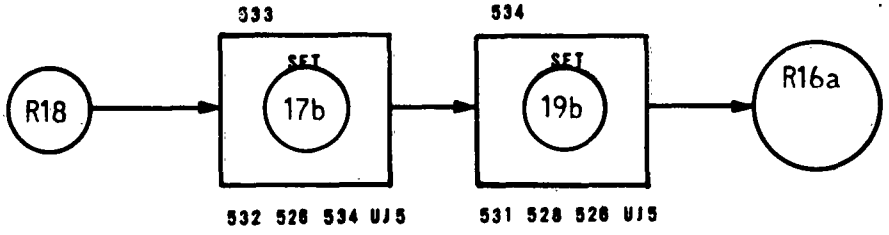
333
SET
17b
534
SET
19b
R18
R16a
532 526 534 UJ5
531 528 526 UJ5

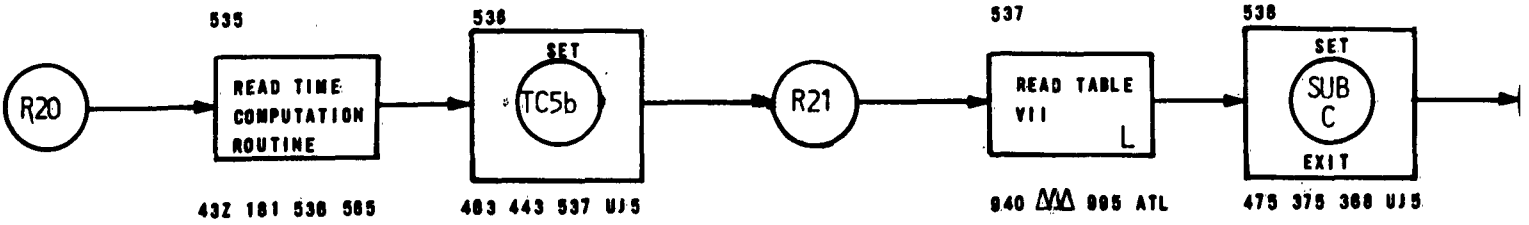
535
READ TIME
COMPUTATION
ROUTINE
536
SET
TC5b
R20
R21
537
READ TABLE
VII
L
538
SET
SUB
C
EXIT
43Z 181 536 565
483 443 537 UJ5
940 ΔΔΔ 995 ATL
475 375 368 UJ5

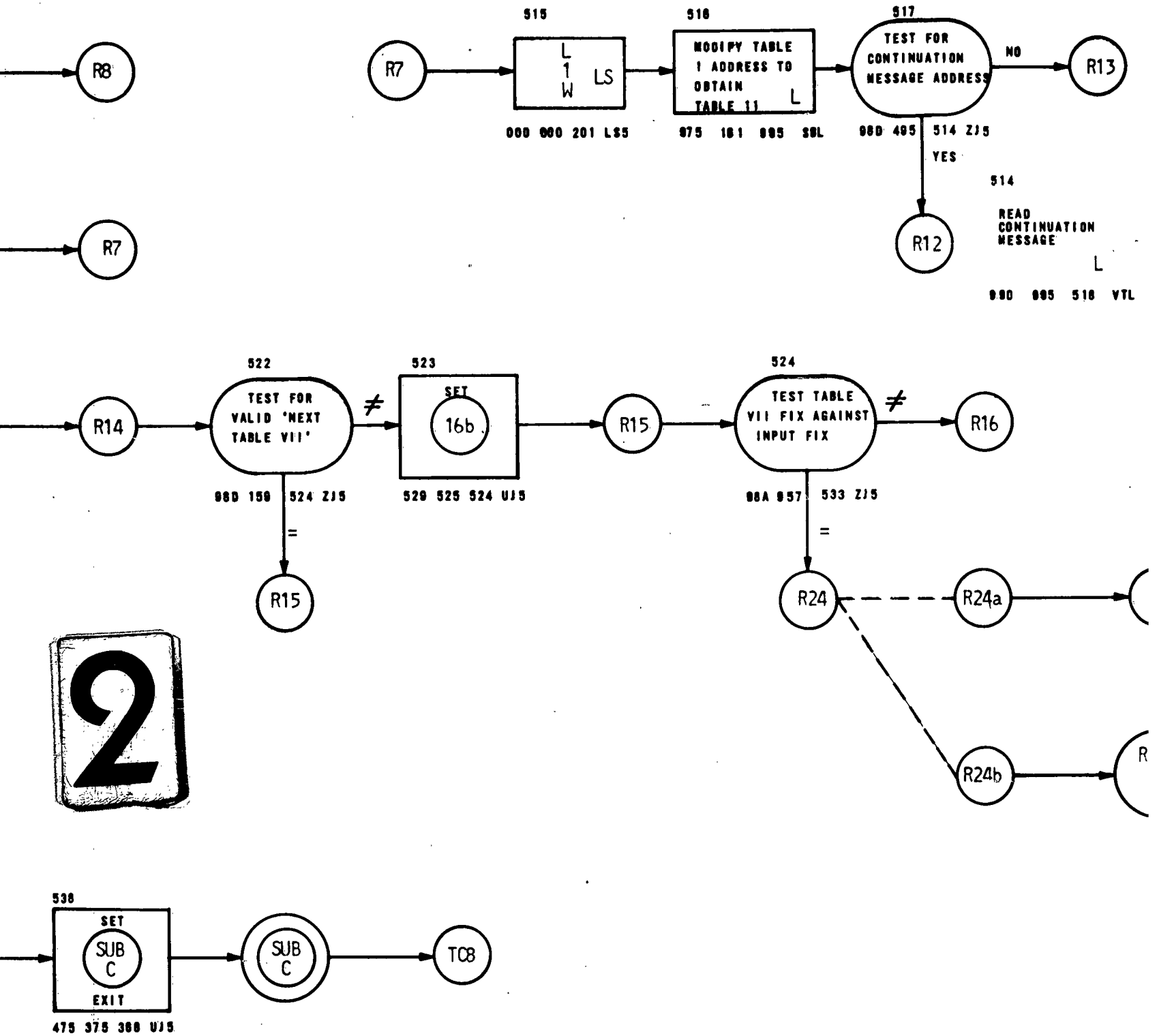
R8
R7
515
L
1
W
LS
000 000 201 LS5
R7
516
MODIFY TABLE
1 ADDRESS TO
OBTAIN
TABLE 11
L
975 181 885 SBL
517
TEST FOR
CONTINUATION
MESSAGE ADDRESS
NO
R13
980 485 514 ZJ5
YES
R12
514
READ
CONTINUATION
MESSAGE
L
980 885 518 VTL
R14
522
TEST FOR
VALID 'NEXT
TABLE VII'
≠
980 159 524 ZJ5
=
R15
523
SET
16b
529 525 524 UJ5
R15
524
TEST TABLE
VII FIX AGAINST
INPUT FIX
≠
R16
98A 957 533 ZJ5
=
R24
R24a
R24b
R
2
538
SET
SUB
C
EXIT
475 375 368 UJ5
SUB
C
TC8

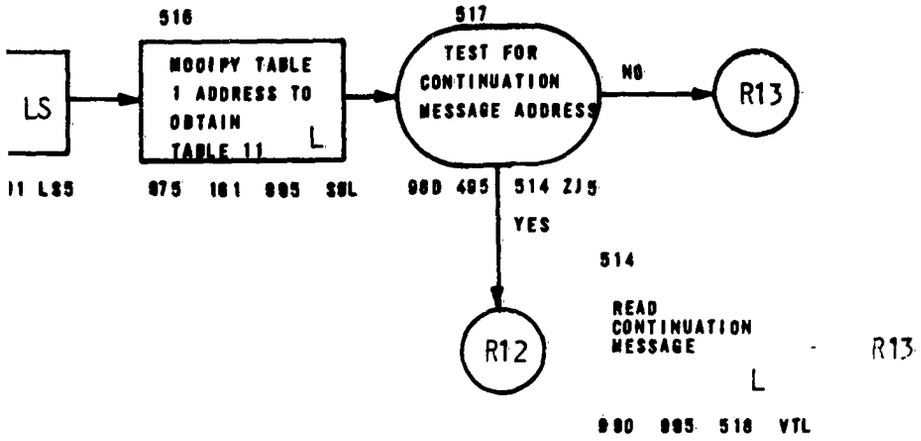
516
MODIFY TABLE 1 ADDRESS TO OBTAIN TABLE 11
L
LS
11 LS5
975 161 995 SSL
517
TEST FOR CONTINUATION MESSAGE ADDRESS
NO
R13
98D 495
514 ZJ5
YES
R12
514
READ CONTINUATION MESSAGE
L
R13
990 995 518 VTL

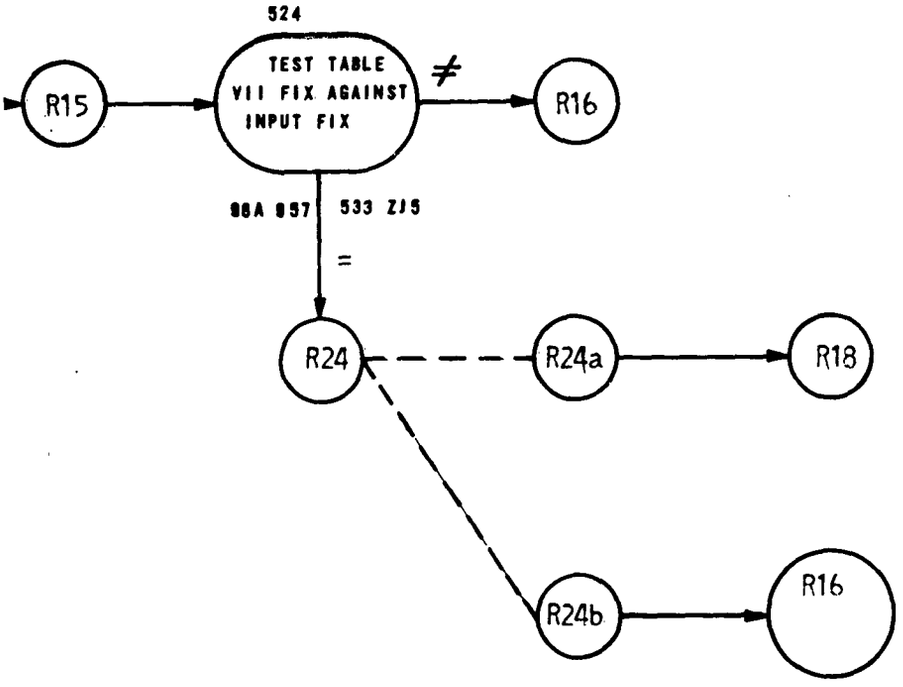
524
TEST TABLE VII FIX AGAINST INPUT FIX
≠
R15
R16
98A 957
533 ZJ5
=
R24
R24a
R18
R24b
R16

3

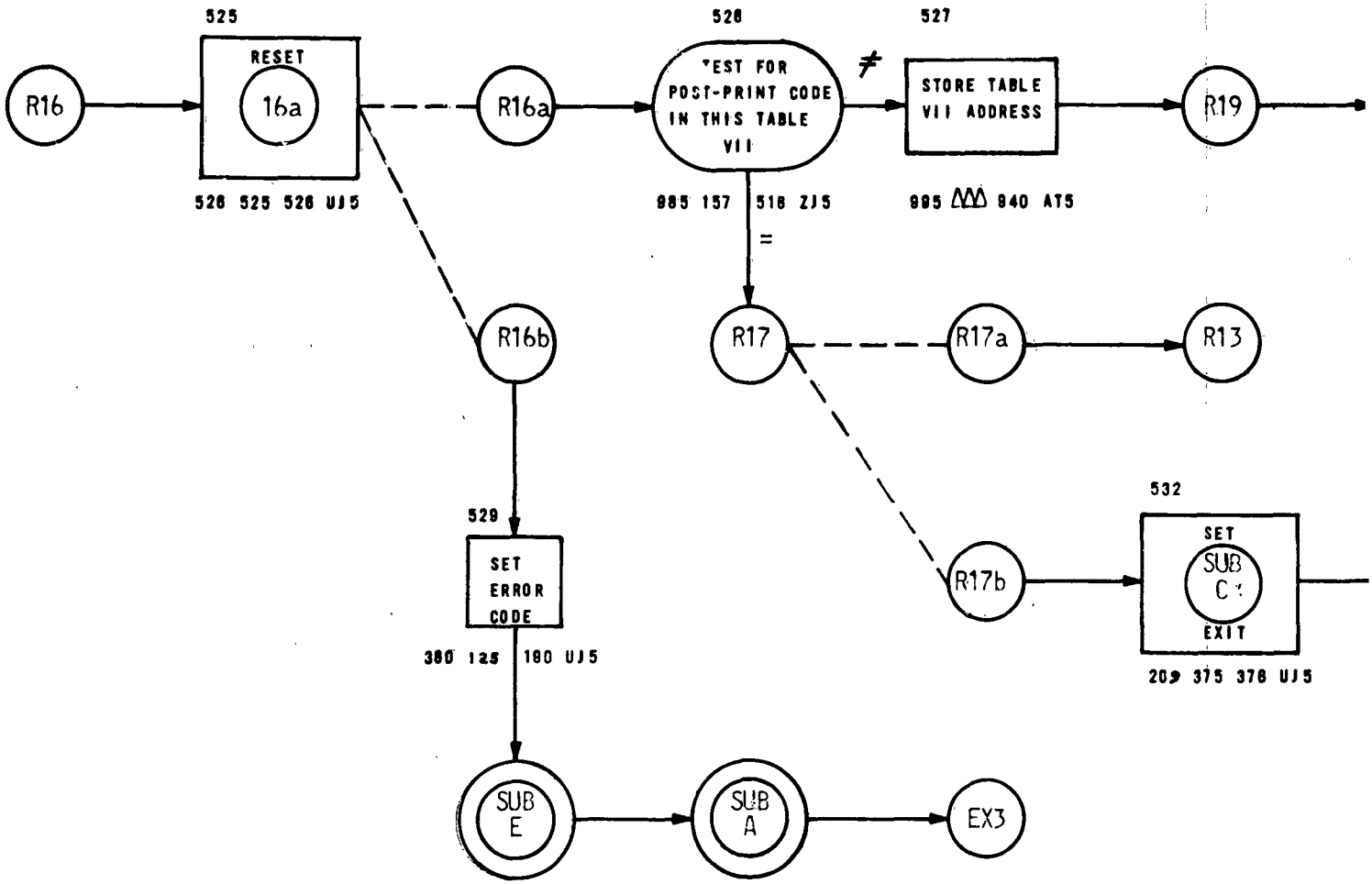
525
RESET
16a
526 525 526 UJ5
R16
R16a
526
TEST FOR POST-PRINT CODE IN THIS TABLE VII
≠
527
STORE TABLE VII ADDRESS
R19
985 157 516 ZJ5
995 ΔΔ 940 AT5
=
R16b
R17
R17a
R13
529
SET ERROR CODE
380 125 180 UJ5
R17b
532
SET
SUB C
EXIT
209 375 378 UJ5
SUB E
SUB A
EX3

1

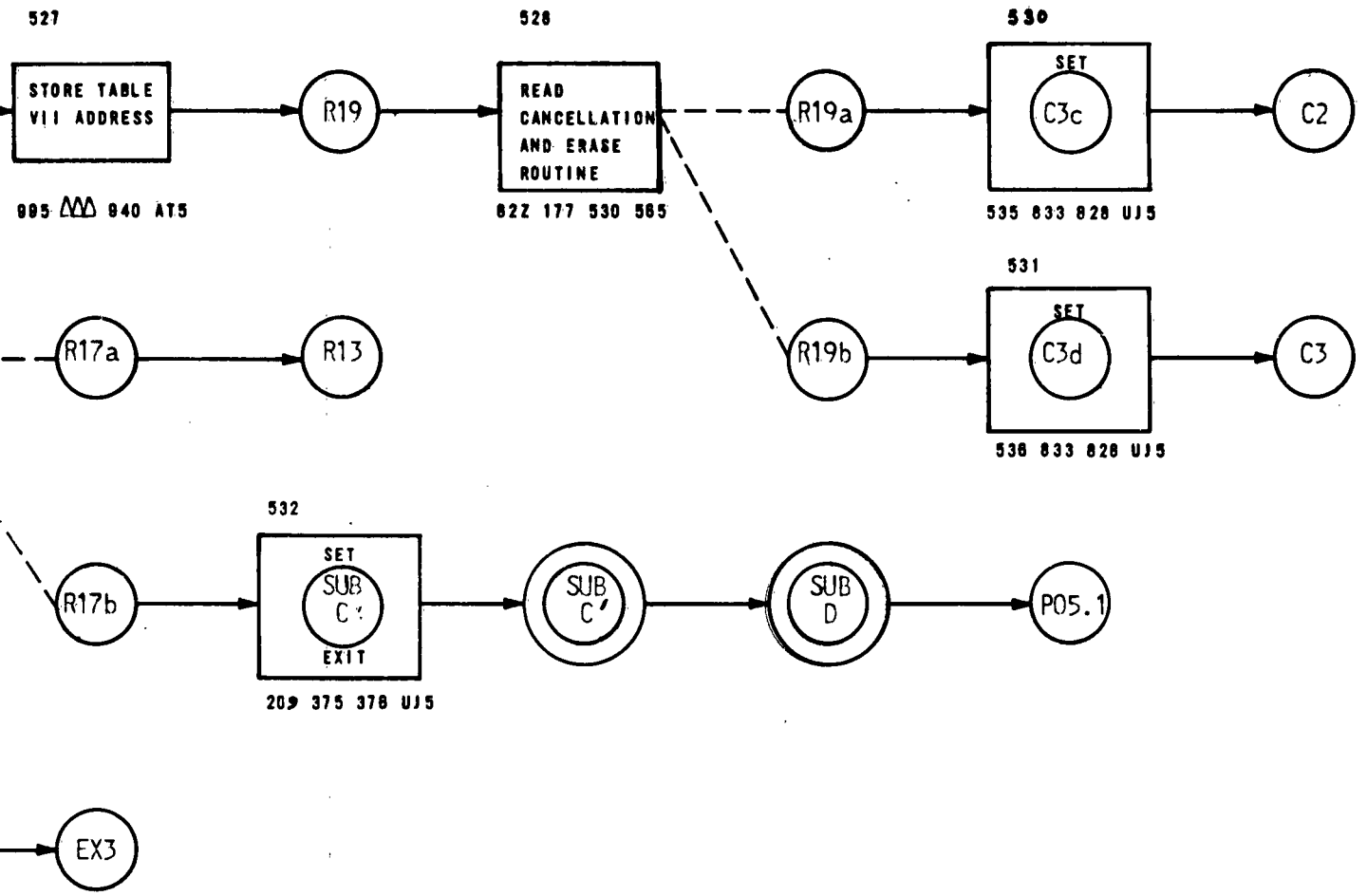
527
STORE TABLE VII ADDRESS
995 940 AT5
R19
528
READ CANCELLATION AND ERASE ROUTINE
822 177 530 565
R19a
530
SET
C3c
535 833 828 UJ5
C2
R17a
R13
R19b
531
SET
C3d
536 833 828 UJ5
C3
532
SET
SUB C
EXIT
209 375 378 UJ5
R17b
SUB C'
SUB D
P05.1
EX3

2

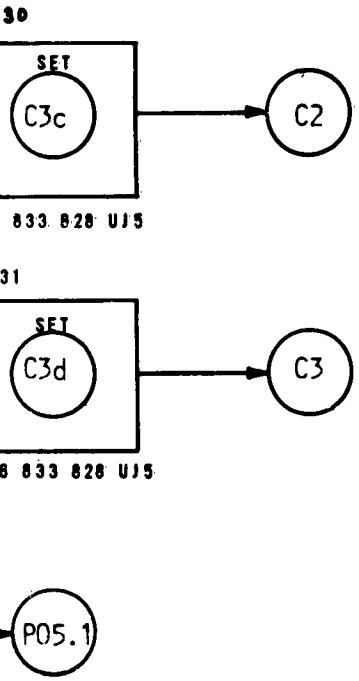
30
SET
C3c
C2
833 828 UJ5
31
SET
C3d
C3
6 833 828 UJ5
P05.1

CONSTANTS, FACTORS AND WORKING STORAGE FOR READOUT ROUTINE

1	5	0		Δ	Δ	Δ	Δ	Δ	Δ	Δ	Δ	Δ	Δ	Δ	Δ	SPACES COMPARATOR
1	5	7		i	i	i	i	i	i	i	i	i	i	P	i	"POST PRINT" TEST CONSTANT
1	5	9		i	i	i	i	5	0	i	i	i	i	i	i	TABLE VII ADDRESS TEST CONSTANT
1	6	1		0	0	0	0	1	0	1	0	0	0	0	0	TABLE II MODIFIER FACTOR
4	9	0		i	i	i	i	'	'	'	i	i	i	i	i	FLIGHT NUMBER TEST CONSTANT
4	9	1		A	A	A	A	A	0	0	0	0	0	0	0	MASKING CONSTANT
4	9	2		i	i	i	i	i	i	i	i	.	.	.	i	FIX IDENTIFIER TEST CONSTANT
4	9	3		i	i	i	i	i	i	i	i	N	S	i	i	"NEXT SUCCEEDING" TEST CONSTANT
4	9	4		A	A	A	A	A	A	A	A	0	0	0	0	MASKING CONSTANT
4	9	5		i	i	i	i	0	1	i	i	i	i	i	i	CONTINUATION MESSAGE ADDRESS TEST CONSTANT
9	4	0		Δ	Δ	Δ	Δ	X	X	X	X	X	X	X	Δ	WORKING STORAGE FOR TABLE VII ADDRESS

*NOTE: THE REMARKS BESIDE THE ABOVE CONSTANTS, FACTORS AND WORKING STORAGES DEFINE THE PRIME PURPOSE AS USED IN THIS ROUTINE. THE FLOW CHARTS WILL DEFINE ANY SECONDARY USAGE OF THESE LOCATIONS.

APPENDIX XVI

ENDING ROUTINE

WORD	Ø												1												2												3											
CHARACTER	11	10	9	8	7	6	5	4	3	2	1	S	11	10	9	8	7	6	5	4	3	2	1	S	11	10	9	8	7	6	5	4	3	2	1	S	11	10	9	8	7	6	5	4	3	2
TRACK 13	–	–	–	–	–	–	–	–	–	–	–	–	–	–	–	–	–	–	–	–	–	–	–	–	–	–	–	–	–	–	–	–	–	–	–	–	–	–	–	–	–	–	–	–	–	–	–	–
TRACK 14	NUMBER OF INPUT MACHINE ERRORS					r	NUMBER OF OUTPUT MACHINE ERRORS					r	NUMBER OF CUE MACHINE ERRORS					r	NUMBER OF PROGRAM ERRORS					r	NUMBER OF DATA ERRORS					r	NUMBER OF INPUT MES-SAGES COUNT-ED TWICE					r	NUMBER OF INPUT OPERATOR ERRORS					r	NUMBER CUE OPERATO ERRORS			
FIELD	V						U						T						S						R						Q						P						N			

ENDING

WORD	Ø												1												2												3											
CHARACTER	11	10	9	8	7	6	5	4	3	2	1	S	11	10	9	8	7	6	5	4	3	2	1	S	11	10	9	8	7	6	5	4	3	2	1	S	11	10	9	8	7	6	5	4	3	2
FORMAT CONSTANTS	Δ	Δ	Δ	Δ	Δ	?	/	E	Δ	N	Δ	Δ	B	r	r	M	S	G	S	Δ	R	C	V	D	r	t	Z	N	Y	t	Δ	Δ	Δ	Δ	Δ	Δ	·	t	Z	D	C	t	Δ	Δ	Δ	Δ
DATA ADDED TO FORMAT	T	I	M	E	Δ																										MESSAGES RECEIVED FROM ZNY					r							MESSAGES RECEIVED FROM ZDC			
FIELD	V						U						T						S						R						Q						P						N			

ENDING

WORD	Ø												1												2												3											
CHARACTER	11	10	9	8	7	6	5	4	3	2	1	S	11	10	9	8	7	6	5	4	3	2	1	S	11	10	9	8	7	6	5	4	3	2	1	S	11	10	9	8	7	6	5	4	3	2
FORMAT CONST-ANTS	?	F	L	T	Δ	P	L	N	S	r	t	R	C	V	D	t	Δ	Δ	Δ	Δ	Δ	Δ	t	C	M	P	L	T	D	t	Δ	Δ	Δ	Δ	Δ	Δ	r	M	S	G	S	Δ	X	M	T	D
DATA ADDED TO FORMAT																	NUMBER OF FLIGHT PLANS RECEIVED					r									NUMBER OF FLIGHT PLANS COMPLETED					r										
FIELD	V						U						T						S						R						Q						P						N			

1

	3	4	5	6	7
	NUMBER OF INPUT OPERATOR ERRORS	NUMBER OF CUE OPERATOR ERRORS	NUMBER OF CUE MESSAGES RECEIVED	NUMBER OF CUE MESSAGES TRANSMITTED	NUMBER OF MESSAGES RECEIVED THRU EXEC. ROUTINE
	MESSAGES RECEIVED FROM ZDC	MESSAGES RECEIVED FROM ZNY	MESSAGES VOIDED ON INPUT	NUMBER OF STRIPS PRINTED	MESSAGES SENT TO ZNY
	P	N	M	L	K
	J	H	G	F	

ENDING SUPERVISOR'S MESSAGE, FIRST PART

BLOCK TRANSFER BUFFER

	3	4	5	6	7
	Δ · t Z D C t Δ Δ Δ Δ Δ Δ	t C U E t Δ Δ Δ Δ Δ Δ ·	L O C A L t Δ Δ Δ Δ Δ r	T O T A L t Δ Δ Δ Δ Δ Δ	r r M S G S Δ
	MESSAGES RECEIVED FROM ZDC	MESSAGES RECEIVED FROM CUE	MESSAGES RECEIVED FROM LOCAL FLIDAP	TOTAL OF ALL MESSAGES RECEIVED	
	P	N	M	L	K
	J	H	G	F	

ENDING SUPERVISOR'S MESSAGE, SECOND PART

BLOCK TRANSFER BUFFER

	3	4	5	6	7
	Δ r M S G S Δ X M T D Δ r	t Z N Y t Δ Δ Δ Δ Δ Δ ·	· t Z D C t Δ Δ Δ Δ Δ Δ	· I C M t t Δ Δ Δ Δ Δ Δ	r · C U E t Δ
	MESSAGES SENT TO ZNY	MESSAGES SENT TO ZDC	TOTAL NUMBER OF ICM'S SENT	NU CU TR	
	P	N	M	L	K
	J	H	G	F	

	6	7	8	9
4 3 2 1 S	11 10 9 8 7 6 5 4 3 2 1 S	11 10 9 8 7 6 5 4 3 2 1 S	11 10 9 8 7 6 5 4 3 2 1 S	11 10 9 8 7 6 5 4 3 2 1 S
ESSAGES ECEIVED ROM ZNY r	MESSAGES VOIDED ON INPUT r	NUMBER OF STRIPS PRINTED r	MESSAGES SENT TO ZNY r	MESSAGES SENT TO ZDC r	NUMBER OF FLIGHT PLANS RECEIVED r	NUMBER OF FLIGHT PLANS COMPLETED r	NUMBER OF COMPUTER MACHINE ERRORS r	NUMBER OF HSP MACHINE ERRORS r
J	H	G	F	E	D	C	B	A

	6	7	8	9
4 3 2 1 S	11 10 9 8 7 6 5 4 3 2 1 S	11 10 9 8 7 6 5 4 3 2 1 S	11 10 9 8 7 6 5 4 3 2 1 S	11 10 9 8 7 6 5 4 3 2 1 S
Δ Δ Δ Δ r	T O T A L t Δ Δ Δ Δ Δ Δ	r r M S G S Δ V O I D E	D t · · · · Δ Δ Δ Δ Δ Δ	r I Δ Δ Δ Δ Δ ? N O X Δ
SSAGES CEIVED M LOCAL DAP r	TOTAL OF ALL MESSAGES RECEIVED .		MESSAGES VOIDED ON INPUT r	
J	H	G	F	E	D	C	B	A

	6	7	8	9
3 2 1 S	11 10 9 8 7 6 5 4 3 2 1 S	11 10 9 8 7 6 5 4 3 2 1 S	11 10 9 8 7 6 5 4 3 2 1 S	11 10 9 8 7 6 5 4 3 2 1 S
Δ Δ Δ Δ	· I C M t t Δ Δ Δ Δ Δ Δ	r · C U E t Δ Δ Δ Δ Δ Δ	r S T R I P S Δ P R I N	I Δ Δ Δ Δ Δ Δ Δ Δ Δ Δ Δ
ESSAGES NT TO ZDC r	TOTAL NUMBER OF ICM'S SENT r	NUMBER OF CUE MESSAGES TRANSMITTED r		
J	H	G	F	E	D	C	B	A

3

WORD	Ø												1												2												3					
CHARACTER	11	10	9	8	7	6	5	4	3	2	1	S	11	10	9	8	7	6	5	4	3	2	1	S	11	10	9	8	7	6	5	4	3	2	1	S	11	10	9	8	7	6
FORMAT CONST-ANTS	?	T	E	D	t	Δ	Δ	Δ	Δ	Δ	Δ	r	E	R	R	O	R	S	r	r	M	E	r	r	C	O	M	P	t	·	Δ	Δ	Δ	Δ	Δ	Δ	·	t	H	S	P	t
DATA ADDED TO FORMAT						NUMBER OF STRIPS PRINTED					r																				NUMBER OF COMPUTER MACHINE ERRORS					r						
FIELD	V					U							T					S							R						Q						P					

WORD	Ø												1												2												3					
CHARACTER	11	10	9	8	7	6	5	4	3	2	1	S	11	10	9	8	7	6	5	4	3	2	1	S	11	10	9	8	7	6	5	4	3	2	1	S	11	10	9	8	7	6
FORMAT CONST-ANTS	?	·	·	·	·	Δ	Δ	Δ	Δ	Δ	Δ	·	t	I	N	t	Δ	Δ	Δ	Δ	Δ	Δ	Δ	·	T	O	T	A	L	t	Δ	Δ	Δ	Δ	Δ	Δ	r	·	P	E	t	t
DATA ADDED TO FORMAT						NUMBER OF CUE OPERATOR ERRORS					r						NUMBER OF INPUT OPERATOR ERRORS					r								TOTAL NUMBER OF OPERATOR ERRORS					r						
FIELD	V					U							T					S							R						Q						P					

	Ø												1												2												3					
	11	10	9	8	7	6	5	4	3	2	1	S	11	10	9	8	7	6	5	4	3	2	1	S	11	10	9	8	7	6	5	4	3	2	1	S	11	10	9	8	7	6

1

CODE	TYPEWRITER FUNCTION	CODE	TYPEWRITER FUNCTION
?	RED COLOR PRINT	Δ	SPACE
/	UPPER CASE	t	TABULATE
β	LOWER CASE	I	TERMINATE PRINT AND CLEAR
r	CARRIAGE RETURN	·(DOT)	NON-PRINT PAD CHARACTER

ENDING SUPERVISOR'S MESSAGE, THIRD PART

BLOCK TRANSFER BUFFER

	3	4	5	6
4 3 2 1 S	11 10 9 8 7 6 5 4 3 2 1 S	11 10 9 8 7 6 5 4 3 2 1 S	11 10 9 8 7 6 5 4 3 2 1 S	11 10 9 8 7 6 5 4 3 2 1 S
Δ Δ Δ Δ Δ	· t H S P t Δ Δ Δ Δ Δ Δ	· t I N t Δ Δ Δ Δ Δ Δ	· t O U T t Δ Δ Δ Δ Δ Δ	· t C U E t Δ Δ Δ Δ Δ Δ
NUMBER OF COMPUTER MACHINE ERRORS r	NUMBER OF HSP MACHINE ERRORS r	NUMBER OF INPUT MACHINE ERRORS r	NUMBER OF OUTPUT MACHINE ERRORS r	NUMBER OF CUE MACHINE ERRORS r
Q	P N	M L	K J	H G

ENDING SUPERVISOR'S MESSAGE, LAST PART

BLOCK TRANSFER BUFFER

	3	4	5	6
4 3 2 1 S	11 10 9 8 7 6 5 4 3 2 1 S	11 10 9 8 7 6 5 4 3 2 1 S	11 10 9 8 7 6 5 4 3 2 1 S	11 10 9 8 7 6 5 4 3 2 1 S
Δ Δ Δ Δ Δ	r · P E t t Δ Δ Δ Δ Δ Δ	r D E t t Δ Δ Δ Δ Δ Δ	r r M T Δ D U M P r t M O	U N T Δ T A P E r t L A B L E
TOTAL NUMBER OF OPERATOR ERRORS r	NUMBER OF PROGRAM ERRORS r	NUMBER OF DATA ERRORS r		
Q	P N	M L	K J	H G

	3	4	5	6
4 3 2 1 S	11 10 9 8 7 6 5 4 3 2 1 S	11 10 9 8 7 6 5 4 3 2 1 S	11 10 9 8 7 6 5 4 3 2 1 S	11 10 9 8 7 6 5 4 3 2 1 S

ER FUNCTION

E PRINT AND CLEAR
T PAD CHARACTER

D PART

				6												7												8												9											
3	2	1	S	11	10	9	8	7	6	5	4	3	2	1	S	11	10	9	8	7	6	5	4	3	2	1	S	11	10	9	8	7	6	5	4	3	2	1	S	11	10	9	8	7	6	5	4	3	2	1	S
Δ	Δ	Δ	Δ	·	t	C	U	E	t	Δ	Δ	Δ	Δ	Δ	Δ	T	O	T	A	L	t	Δ	Δ	Δ	Δ	Δ	Δ	r	O	E	r	t	C	U	E	t	I	Δ	Δ	Δ	Δ	Δ	Δ	Δ	Δ	Δ	Δ	Δ	Δ	Δ	Δ
ER OF PUT HINE ORS			r							NUMBER OF CUE MACHINE ERRORS					r							TOTAL NUMBER OF MACHINE ERRORS					r																								
J				H						G						F						E						D						C						B							A				

T PART

				6												7												8												9											
3	2	1	S	11	10	9	8	7	6	5	4	3	2	1	S	11	10	9	8	7	6	5	4	3	2	1	S	11	10	9	8	7	6	5	4	3	2	1	S	11	10	9	8	7	6	5	4	3	2	1	S
r	t	M	O	U	N	T	Δ	T	A	P	E	r	t	L	A	B	L	E	Δ	O	N	Δ	O	r	r	I	Δ	Δ	Δ	Δ	Δ	Δ	Δ	Δ	Δ	Δ	Δ	Δ	Δ	Δ	Δ	Δ	Δ	Δ	Δ	Δ	Δ	Δ	Δ	Δ	Δ
J				H						G						F						E						D						C						B						A					

				6												7												8												9											
3	2	1	S	11	10	9	8	7	6	5	4	3	2	1	S	11	10	9	8	7	6	5	4	3	2	1	S	11	10	9	8	7	6	5	4	3	2	1	S	11	10	9	8	7	6	5	4	3	2	1	S

3

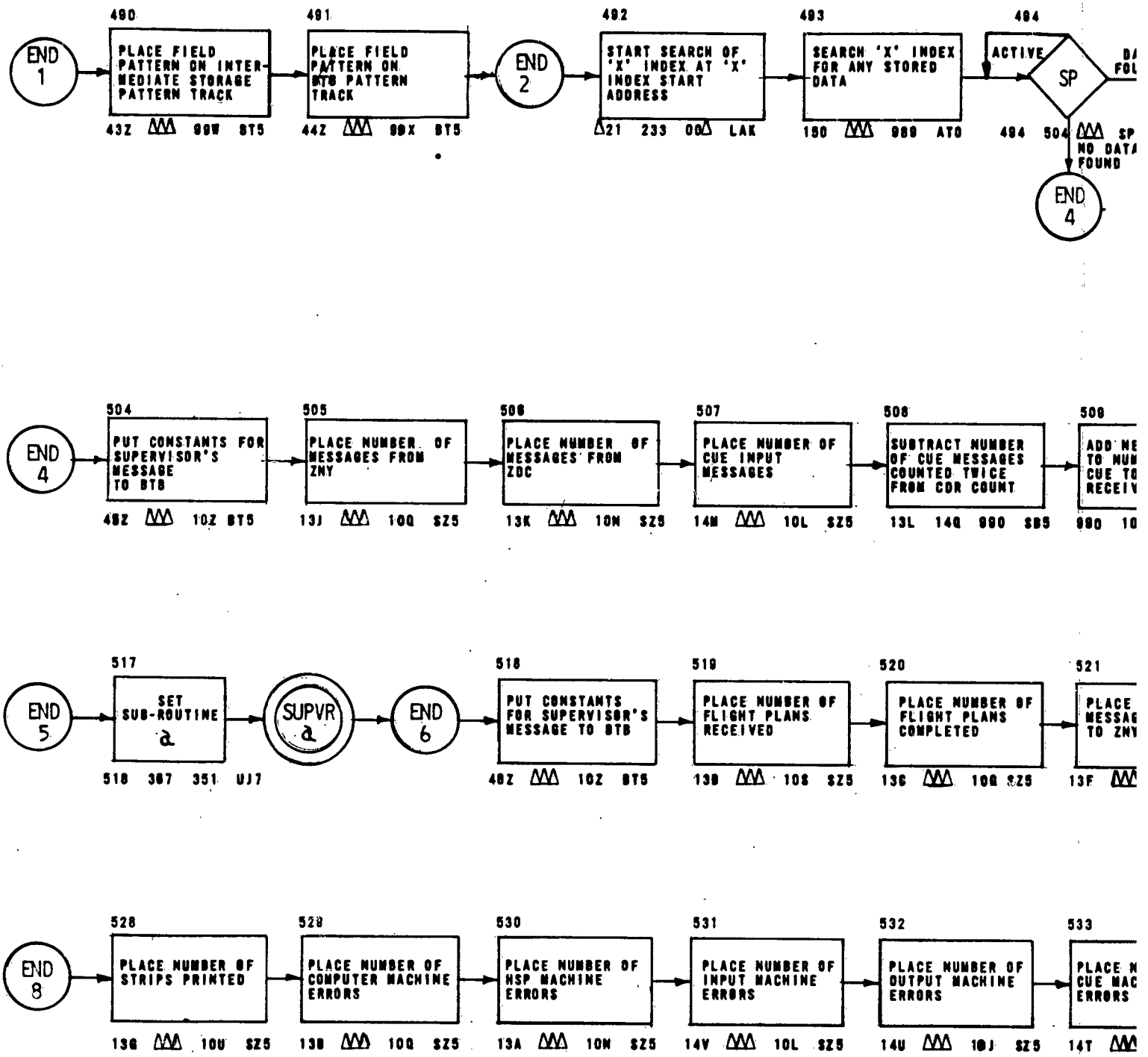
END 1
490
PLACE FIELD PATTERN ON INTER-MEDIATE STORAGE PATTERN TRACK
43Z 99W BT5
491
PLACE FIELD PATTERN ON BTB PATTERN TRACK
44Z 99X BT5
END 2
492
START SEARCH OF 'X' INDEX AT 'X' INDEX START ADDRESS
21 233 00 LAK
493
SEARCH 'X' INDEX FOR ANY STORED DATA
150 989 AT0
494
ACTIVE
SP
494 504 SP
NO DATA FOUND
END 4
END 4
504
PUT CONSTANTS FOR SUPERVISOR'S MESSAGE TO BTB
48Z 10Z BT5
505
PLACE NUMBER OF MESSAGES FROM ZNY
13J 10Q SZ5
506
PLACE NUMBER OF MESSAGES FROM ZDC
13K 10N SZ5
507
PLACE NUMBER OF CUE INPUT MESSAGES
14M 10L SZ5
508
SUBTRACT NUMBER OF CUE MESSAGES COUNTED TWICE FROM CDR COUNT
13L 14Q 990 SB5
END 5
517
SET SUB-ROUTINE a
518 367 351 UJ7
SUPVR a
END 6
518
PUT CONSTANTS FOR SUPERVISOR'S MESSAGE TO BTB
48Z 10Z BT5
519
PLACE NUMBER OF FLIGHT PLANS RECEIVED
13B 10S SZ5
520
PLACE NUMBER OF FLIGHT PLANS COMPLETED
13G 10Q SZ5
521
END 8
528
PLACE NUMBER OF STRIPS PRINTED
13G 10U SZ5
529
PLACE NUMBER OF COMPUTER MACHINE ERRORS
13B 10Q SZ5
530
PLACE NUMBER OF HSP MACHINE ERRORS
13A 10N SZ5
531
PLACE NUMBER OF INPUT MACHINE ERRORS
14V 10L SZ5
532
PLACE NUMBER OF OUTPUT MACHINE ERRORS
14U 10J SZ5
533

1

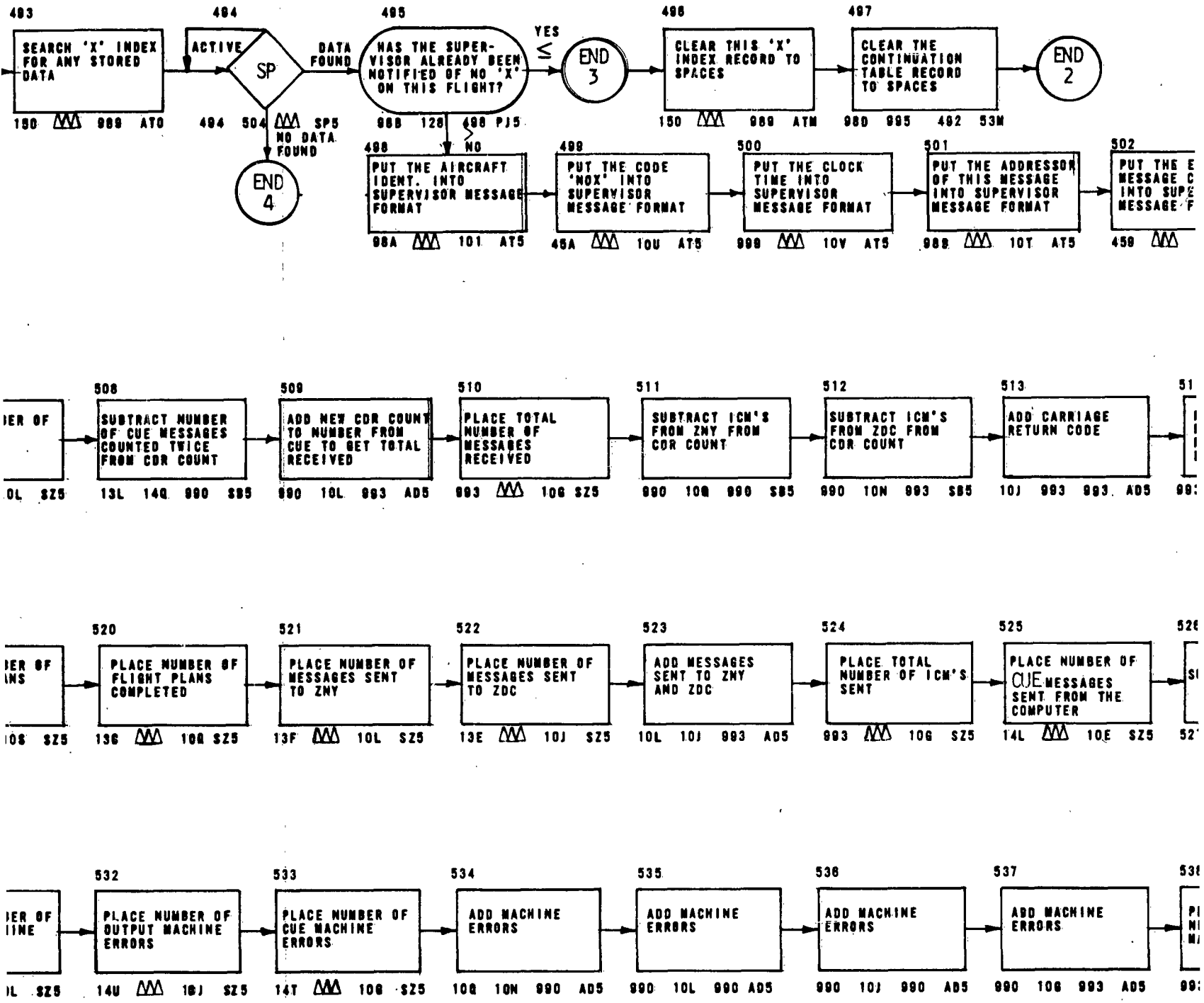
493
SEARCH 'X' INDEX FOR ANY STORED DATA
150 989 AT0
494
ACTIVE
SP
494 504 SP5
NO DATA FOUND
END 4
DATA FOUND
495
HAS THE SUPERVISOR ALREADY BEEN NOTIFIED OF NO 'X' ON THIS FLIGHT?
988 128 498 PJ5
YES
END 3
NO
496
CLEAR THIS 'X' INDEX RECORD TO SPACES
150 989 ATM
497
CLEAR THE CONTINUATION TABLE RECORD TO SPACES
98D 995 492 53M
END 2
498
PUT THE AIRCRAFT IDENT. INTO SUPERVISOR MESSAGE FORMAT
98A 101 AT5
499
PUT THE CODE 'NOX' INTO SUPERVISOR MESSAGE FORMAT
45A 10U AT5
500
PUT THE CLOCK TIME INTO SUPERVISOR MESSAGE FORMAT
999 10V AT5
501
PUT THE ADDRESSOR OF THIS MESSAGE INTO SUPERVISOR MESSAGE FORMAT
988 10T AT5
502
PUT THE E MESSAGE C INTO SUP MESSAGE F
459
IER OF
0L SZ5
508
SUBTRACT NUMBER OF CUE MESSAGES COUNTED TWICE FROM CDR COUNT
13L 14Q 990 SB5
509
ADD NEW CDR COUNT TO NUMBER FROM CUE TO GET TOTAL RECEIVED
990 10L 993 AD5
510
PLACE TOTAL NUMBER OF MESSAGES RECEIVED
993 10G SZ5
511
SUBTRACT ICM'S FROM ZNY FROM CDR COUNT
990 10Q 990 SB5
512
SUBTRACT ICM'S FROM ZDC FROM CDR COUNT
990 10N 993 SB5
513
ADD CARRIAGE RETURN CODE
10J 993 993 AD5
IER OF
INS
10S SZ5
520
PLACE NUMBER OF FLIGHT PLANS COMPLETED
13G 10Q SZ5
521
PLACE NUMBER OF MESSAGES SENT TO ZNY
13F 10L SZ5
522
PLACE NUMBER OF MESSAGES SENT TO ZDC
13E 10J SZ5
523
ADD MESSAGES SENT TO ZNY AND ZDC
10L 10J 993 AD5
524
PLACE TOTAL NUMBER OF ICM'S SENT
993 10G SZ5
525
PLACE NUMBER OF CUE MESSAGES SENT FROM THE COMPUTER
14L 10E SZ5
IER OF
IINE
IL SZ5
532
PLACE NUMBER OF OUTPUT MACHINE ERRORS
14U 10J SZ5
533
PLACE NUMBER OF CUE MACHINE ERRORS
14T 10G SZ5
534
ADD MACHINE ERRORS
10Q 10N 990 AD5
535
ADD MACHINE ERRORS
990 10L 990 AD5
536
ADD MACHINE ERRORS
990 10J 990 AD5
537
ADD MACHINE ERRORS
990 10G 993 AD5

2

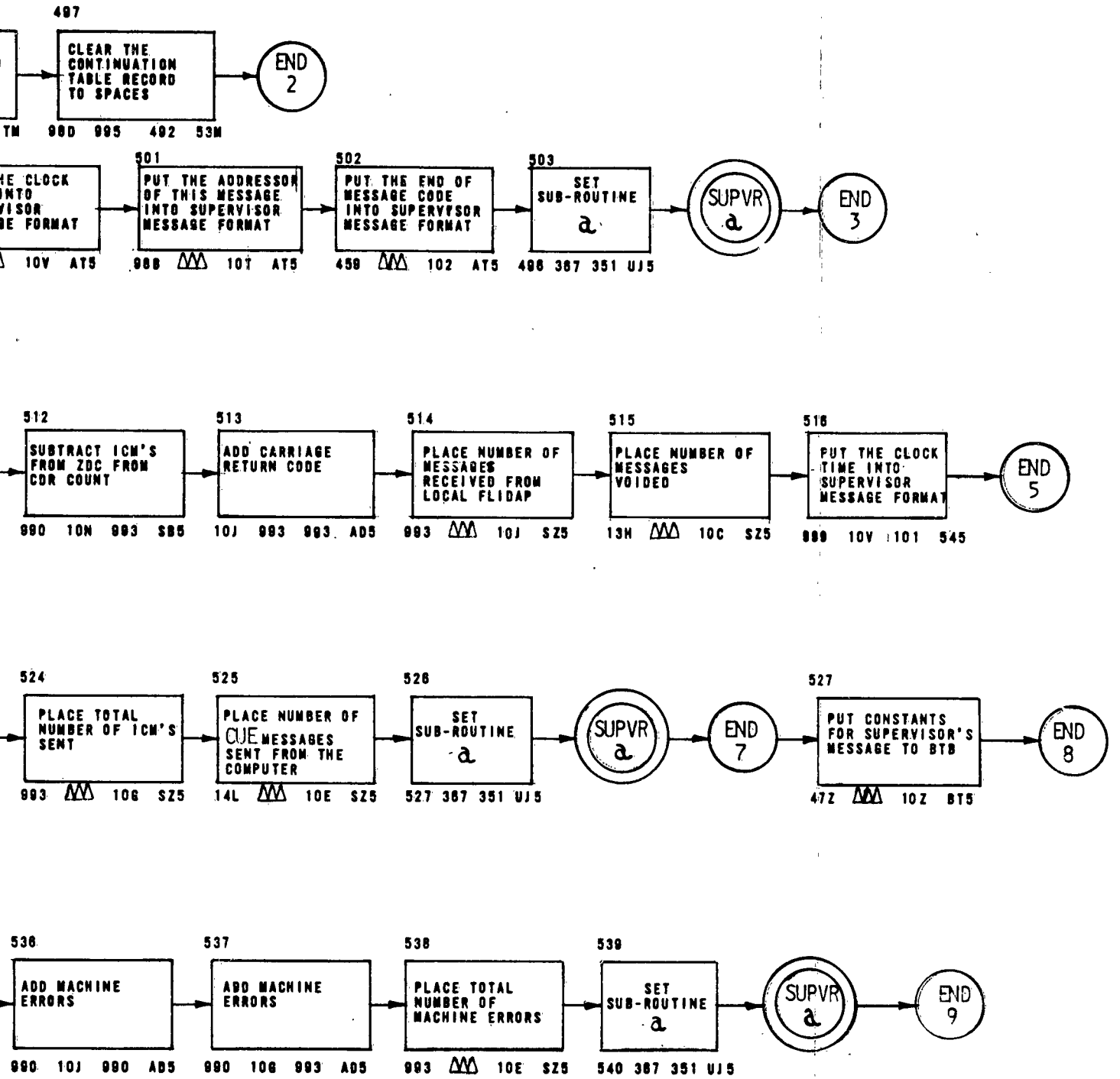
497
CLEAR THE CONTINUATION TABLE RECORD TO SPACES
END 2
TM 98D 995 492 53M
HE CLOCK NTO VISOR E FORMAT
10V AT5
501
PUT THE ADDRESSOR OF THIS MESSAGE INTO SUPERVISOR MESSAGE FORMAT
98B 10T AT5
502
PUT THE END OF MESSAGE CODE INTO SUPERVISOR MESSAGE FORMAT
459 102 AT5
503
SET SUB-ROUTINE a
496 367 351 UJ5
SUPVR a
END 3
512
SUBTRACT ICM'S FROM ZDC FROM CDR COUNT
990 10N 993 SB5
513
ADD CARRIAGE RETURN CODE
10J 993 993 AD5
514
PLACE NUMBER OF MESSAGES RECEIVED FROM LOCAL FLIDAP
993 10J SZ5
515
PLACE NUMBER OF MESSAGES VOIDED
13H 10C SZ5
516
PUT THE CLOCK TIME INTO SUPERVISOR MESSAGE FORMAT
989 10V 101 545
END 5
524
PLACE TOTAL NUMBER OF ICM'S SENT
993 10G SZ5
525
PLACE NUMBER OF CUE MESSAGES SENT FROM THE COMPUTER
14L 10E SZ5
526
SET SUB-ROUTINE a
527 367 351 UJ5
SUPVR a
END 7
527
PUT CONSTANTS FOR SUPERVISOR'S MESSAGE TO BTB
47Z 10Z BT5
END 8
536
ADD MACHINE ERRORS
990 10J 990 AD5
537
ADD MACHINE ERRORS
990 10G 993 AD5
538
PLACE TOTAL NUMBER OF MACHINE ERRORS
993 10E SZ5
539
SET SUB-ROUTINE a
540 367 351 UJ5
SUPVR a
END 9

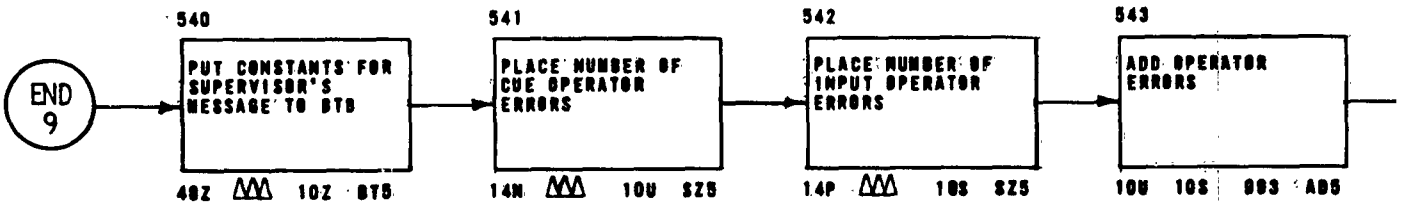
END
9
540
PUT CONSTANTS FOR SUPERVISOR'S MESSAGE TO BTB
49Z 10Z BT5
541
PLACE NUMBER OF CUE OPERATOR ERRORS
14N 10U SZ5
542
PLACE NUMBER OF INPUT OPERATOR ERRORS
14P 10S SZ5
543
ADD OPERATOR ERRORS
10U 10S 993 AD5

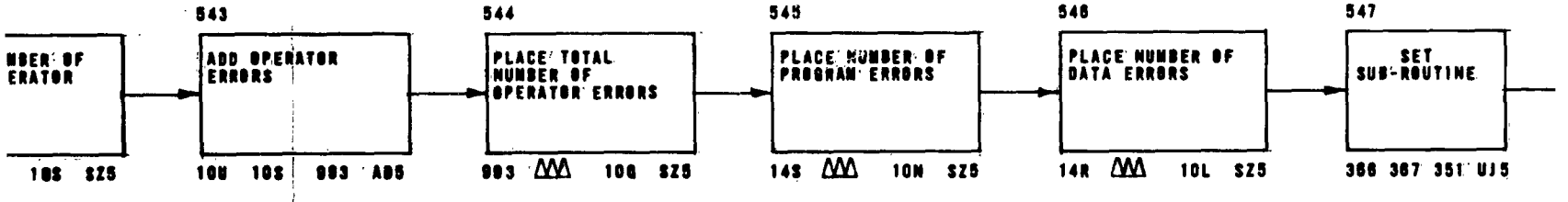
NBER OF
ERATOR
10S SZ5
543
ADD OPERATOR
ERRORS
10N 10S 993 AD5
544
PLACE TOTAL
NUMBER OF
OPERATOR ERRORS
993 10G SZ5
545
PLACE NUMBER OF
PROGRAM ERRORS
14S 10N SZ5
546
PLACE NUMBER OF
DATA ERRORS
14R 10L SZ5
547
SET
SUB-ROUTINE
366 367 351 UJ5

2

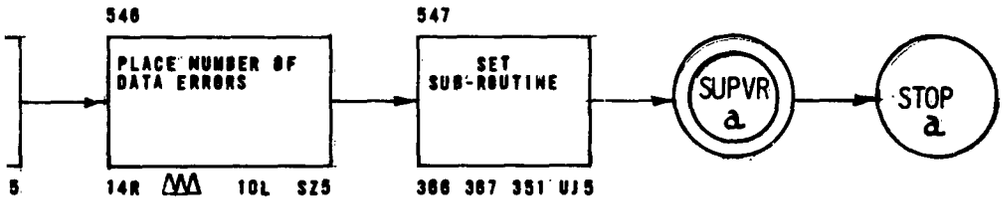
546
PLACE NUMBER OF DATA ERRORS
14R 10L SZ5
547
SET SUB-ROUTINE
366 367 351 UJ5
SUPVR
a
STOP
a

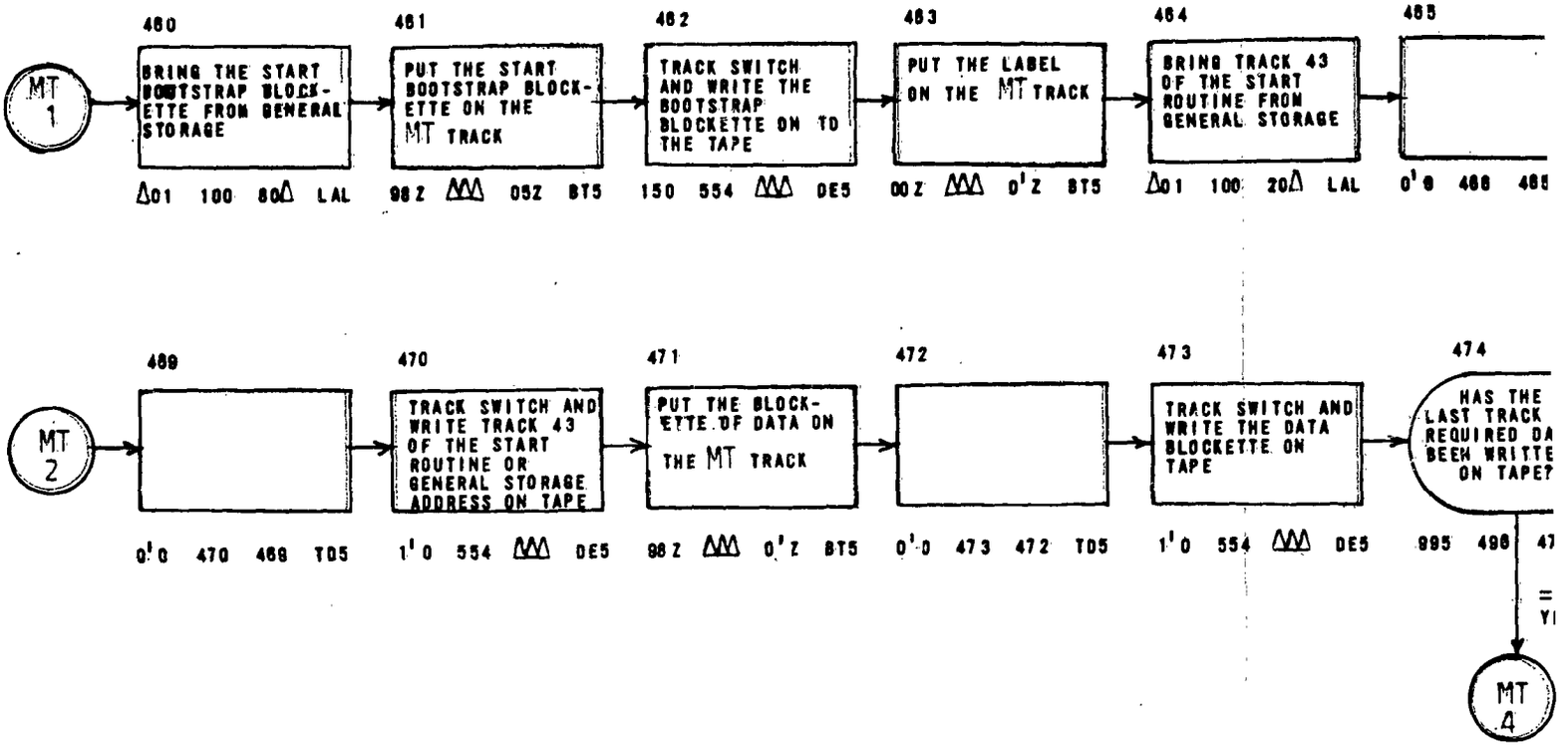
MT 1
460
BRING THE START BOOTSTRAP BLOCKETTE FROM GENERAL STORAGE
Δ01 100 80Δ LAL
461
PUT THE START BOOTSTRAP BLOCKETTE ON THE MT TRACK
98Z ΔΔΔ 05Z BT5
462
TRACK SWITCH AND WRITE THE BOOTSTRAP BLOCKETTE ON TO THE TAPE
150 554 ΔΔΔ DE5
463
PUT THE LABEL ON THE MT TRACK
00Z ΔΔΔ 0'Z BT5
464
BRING TRACK 43 OF THE START ROUTINE FROM GENERAL STORAGE
Δ01 100 20Δ LAL
465
0'0 466 465
MT 2
469
0'0 470 468 TD5
470
TRACK SWITCH AND WRITE TRACK 43 OF THE START ROUTINE OR GENERAL STORAGE ADDRESS ON TAPE
1'0 554 ΔΔΔ DE5
471
PUT THE BLOCKETTE OF DATA ON THE MT TRACK
98Z ΔΔΔ 0'Z BT5
472
0'0 473 472 TD5
473
TRACK SWITCH AND WRITE THE DATA BLOCKETTE ON TAPE
1'0 554 ΔΔΔ DE5
474
HAS THE LAST TRACK REQUIRED DA BEEN WRITTE ON TAPE?
995 498 47
MT 4

1

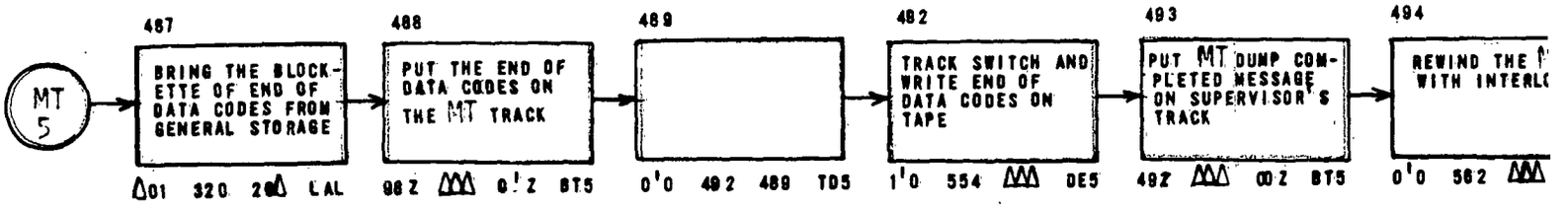
MT 5
487
BRING THE BLOCKETTE OF END OF DATA CODES FROM GENERAL STORAGE
Δ01 320 20Δ LAL
488
PUT THE END OF DATA CODES ON THE MT TRACK
98Z ΔΔΔ 0'Z BT5
489
0'0 492 489 TD5
492
TRACK SWITCH AND WRITE END OF DATA CODES ON TAPE
1'0 554 ΔΔΔ DE5
493
PUT MT DUMP COMPLETED MESSAGE ON SUPERVISOR'S TRACK
492 ΔΔΔ 00Z BT5
494
REWIND THE M WITH INTERLC
0'0 562 ΔΔΔ

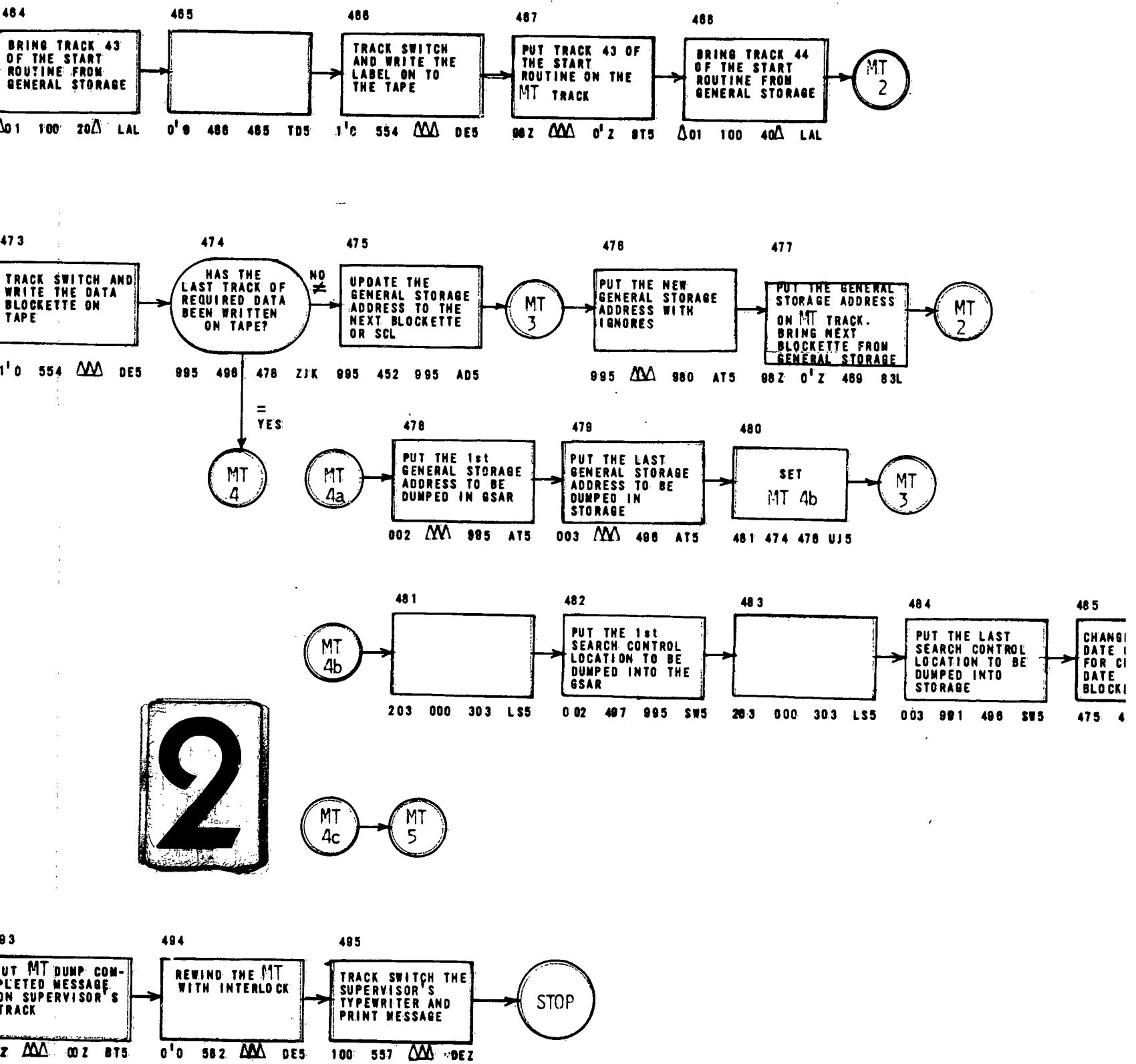
464
BRING TRACK 43 OF THE START ROUTINE FROM GENERAL STORAGE
465
466
TRACK SWITCH AND WRITE THE LABEL ON TO THE TAPE
467
PUT TRACK 43 OF THE START ROUTINE ON THE MT TRACK
468
BRING TRACK 44 OF THE START ROUTINE FROM GENERAL STORAGE
MT 2
473
TRACK SWITCH AND WRITE THE DATA BLOCKETTE ON TAPE
474
HAS THE LAST TRACK OF REQUIRED DATA BEEN WRITTEN ON TAPE?
NO ≠
475
UPDATE THE GENERAL STORAGE ADDRESS TO THE NEXT BLOCKETTE OR SCL
MT 3
476
PUT THE NEW GENERAL STORAGE ADDRESS WITH IGNORES
477
PUT THE GENERAL STORAGE ADDRESS ON MT TRACK. BRING NEXT BLOCKETTE FROM GENERAL STORAGE
MT 2
= YES
MT 4
MT 4a
478
PUT THE 1st GENERAL STORAGE ADDRESS TO BE DUMPED IN GSAR
479
PUT THE LAST GENERAL STORAGE ADDRESS TO BE DUMPED IN STORAGE
480
SET MT 4b
MT 3
MT 4b
481
482
PUT THE 1st SEARCH CONTROL LOCATION TO BE DUMPED INTO THE GSAR
483
484
PUT THE LAST SEARCH CONTROL LOCATION TO BE DUMPED INTO STORAGE
485
MT 4c
MT 5
494
REWIND THE MT WITH INTERLOCK
495
TRACK SWITCH THE SUPERVISOR'S TYPEWRITER AND PRINT MESSAGE
STOP

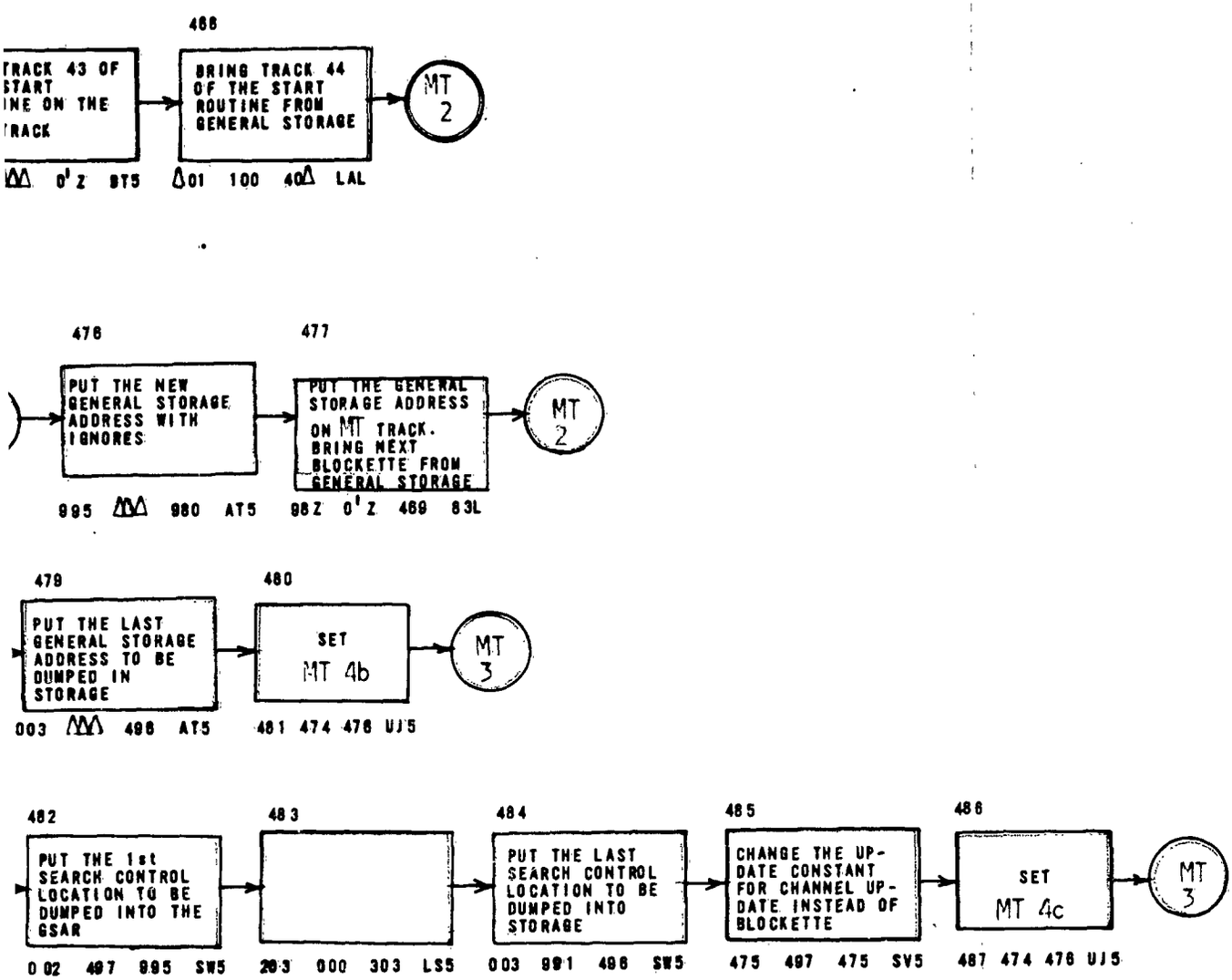

GENERAL STORAGE
DUMP TO MAGNETIC TAPE

128	Δ Δ Δ Δ Δ Δ Δ Δ Δ Δ 1 Δ	1 constant
15Ø	Δ Δ Δ Δ Δ Δ Δ Δ Δ Δ Δ Δ	Space constants

Each of the following, except as noted in 134, contain two counters, one in the high order 6 character positions and one in the low order 6 positions. At the end of a run they may appear as follows:

Ø Ø Ø Ø 9 r Ø 3 4 3 2 r

	High order 6	Low order 6
134	r r | ; r t	Total number of messages received. A pad is in the low order position.
135	Messages received from ZDC.	Messages received from ZNY.
136	Messages voided on input.	Number of strips printed.
137	Messages sent to ZNY.	Messages sent to ZDC.
138	Number of flight plans received.	Number of flight plans completed.
139	Number of computer machine errors.	Number of HSP machine errors.
14Ø	Number of input machine errors.	Number of output machine errors.
141	Number of CUE machine errors.	Number of program errors.
142	Number of data errors.	Number of messages added to the total count twice, once in CUE and once in Executive routine.
143	Number of input operator errors.	Number of CUE operator errors.
144	Number of CUE messages received.	Number of CUE messages transmitted.

Constants for the Supervisor Messages

45Ø	Δ	Δ	Δ	Δ	Δ	?	/	E	Δ	N	Δ	D
451	β	r	r	M	S	G	S	Δ	R	C	V	D
452	r	t	Z	N	Y	t	Δ	Δ	Δ	Δ	Δ	Δ
453	·	t	Z	D	C	t	Δ	Δ	Δ	Δ	Δ	Δ
454	t	C	U	E	t	Δ	Δ	Δ	Δ	Δ	Δ	Δ
455	L	O	C	A	L	t	Δ	Δ	Δ	Δ	Δ	r
456	T	O	T	A	L	t	Δ	Δ	Δ	Δ	Δ	Δ
457	r	r	M	S	G	S	Δ	V	O	I	D	E
458	D	t	·	·	·	·	Δ	Δ	Δ	Δ	Δ	Δ
459	r	I	Δ	Δ	Δ	Δ	Δ	?	N	O	X	Δ

NOX Costant for Supervisor's message.

46Ø	?	F	L	T	Δ	P	L	N	S	r	t	R
461	C	V	D	t	Δ	Δ	Δ	Δ	Δ	Δ	t	c
462	M	P	L	T	D	t	Δ	Δ	Δ	Δ	Δ	Δ
463	r	M	S	G	S	Δ	X	M	T	D	Δ	r
464	t	Z	N	Y	t	Δ	Δ	Δ	Δ	Δ	r	·
465	.	t	Z	D	C	t	Δ	Δ	Δ	Δ	Δ	Δ
466	.	I	C	M	t	t	Δ	Δ	Δ	Δ	Δ	Δ
467	r	.	C	U	E	t	Δ	Δ	Δ	Δ	Δ	Δ
468	r	S	T	R	I	P	S	Δ	P	R	I	N
469	I	Δ	Δ	Δ	Δ	Δ	Δ	Δ	Δ	Δ	Δ	Δ

47Ø	?	T	E	D	t	Δ	Δ	Δ	Δ	Δ	Δ	r
471	E	R	R	O	R	S	r	r	M	E	r	t
472	C	O	M	P	t	.	Δ	Δ	Δ	Δ	Δ	Δ
473	.	t	H	S	P	t	Δ	Δ	Δ	Δ	Δ	Δ
474	.	t	I	N	t	Δ	Δ	Δ	Δ	Δ	Δ	Δ
475	.	t	O	U	T	t	Δ	Δ	Δ	Δ	Δ	Δ
476	.	t	C	U	E	t	Δ	Δ	Δ	Δ	Δ	Δ
477	T	O	T	A	L	t	Δ	Δ	Δ	Δ	Δ	Δ
478	r	O	E	r	t	C	U	E	t	|	Δ	Δ
479	Δ	Δ	Δ	Δ	Δ	Δ	Δ	Δ	Δ	Δ	Δ	Δ

48Ø	?	.	.	.	.	Δ	Δ	Δ	Δ	Δ	Δ	.
481	t	I	N	t	Δ	Δ	Δ	Δ	Δ	Δ	Δ	.
482	T	O	T	A	L	t	Δ	Δ	Δ	Δ	Δ	Δ
483	r	.	P	E	t	t	Δ	Δ	Δ	Δ	Δ	Δ
484	r	D	E	t	t	Δ	Δ	Δ	Δ	Δ	Δ	r
485	r	M	T	Δ	D	U	M	P	r	t	M	O
486	U	N	T	Δ	T	A	P	E	r	t	L	A
487	B	L	E	Δ	O	N	Δ	Ø	r	r	|	Δ

APPENDIX XVII

MACHINE ERROR ROUTINE

WORD	Ø												1												2												3							
CHARACTER	11	10	9	8	7	6	5	4	3	2	1	S	11	10	9	8	7	6	5	4	3	2	1	S	11	10	9	8	7	6	5	4	3	2	1	S	11	10	9	8	7	6	5	4
MESSAGE FORMAT CONSTANTS	Δ	Δ	Δ	Δ	Δ	Δ	?	/	M	Δ	E	β	Δ	Δ	U	F	C	Δ	-	-	-	Δ	G	S	A	R	-	Δ	Δ	Δ	Δ	Δ	Δ	Δ	-	P	A	K	Δ	-	-	-	Δ	I
DATA ADDED TO FORMAT	T	I	M	E									•						P A G T	A T S N	R H P O							G S A R - - - -				da t a - - -							P A K D A T A - - -				
FIELD	V				U								T			S								R																				

WORD	Ø												1												2												3							
CHARACTER	11	10	9	8	7	6	5	4	3	2	1	S	11	10	9	8	7	6	5	4	3	2	1	S	11	10	9	8	7	6	5	4	3	2	1	S	11	10	9	8	7	6	5	4
FIELD																																												

WORD	Ø												1												2												3							
CHARACTER	11	10	9	8	7	6	5	4	3	2	1	S	11	10	9	8	7	6	5	4	3	2	1	S	11	10	9	8	7	6	5	4	3	2	1	S	11	10	9	8	7	6	5	4
FIELD																																												

CODE	TYPEWRITER FUNCTION	CODE	TYPEWRITER FUNCTION
Δ	SPACE	i	IGNORE - NONPRIN
?	RED COLOR PRINT	I	TERMINATE PRINT
/	UPPER CASE		
β	LOWER CASE		
r	CARRIAGE RETURN		
t	TABULATE		

1

SUPERVISOR'S MACHINE ERROR MESSAGE
BLOCK TRANSFER BUFFER

2	3	4	5	6	
5 4 3 2 1 S	11 10 9 8 7 6 5 4 3 2 1 S	11 10 9 8 7 6 5 4 3 2 1 S	11 10 9 8 7 6 5 4 3 2 1 S	11 10 9 8 7 6 5 4 3 2 1 S	11 10
Δ Δ Δ Δ - P A K Δ - - - Δ I R V Δ Δ	- - - - - - - - - - - - - -	Δ r t i i i i i i i i i i	Δ Δ Δ Δ Δ Δ Δ Δ Δ Δ Δ	r r	
- - - - data	PAK DATA	Current Instruction revolver data	Δ r t 2 N D Δ Δ M E Δ Δ	Processing identification (see below)	Δ P
R		Q P N	M L K J	H G	

2	3	4	5	6	
5 4 3 2 1 S	11 10 9 8 7 6 5 4 3 2 1 S	11 10 9 8 7 6 5 4 3 2 1 S	11 10 9 8 7 6 5 4 3 2 1 S	11 10 9 8 7 6 5 4 3 2 1 S	11 10

2	3	4	5	6	
5 4 3 2 1 S	11 10 9 8 7 6 5 4 3 2 1 S	11 10 9 8 7 6 5 4 3 2 1 S	11 10 9 8 7 6 5 4 3 2 1 S	11 10 9 8 7 6 5 4 3 2 1 S	11 10

TYPEWRITER FUNCTION

_____ IGNORE - NONPRINT PAD CHARACTER

_____ TERMINATE PRINT AND CLEAR

PROCESSING IDENTIFICATION (WORD 6 ABOVE)

Δ Δ Δ Δ Δ AIRCRAFT IDENT.	
I N P U T r r I Δ Δ Δ Δ	
S E A R C H r r I Δ Δ Δ	
E R A S E r r I Δ Δ Δ Δ	
E R R O R r r I Δ Δ Δ Δ	
C U E r r I Δ Δ Δ Δ Δ Δ	
E N D I N G r r I Δ Δ Δ	

or

Optr. point Δ Aircraft Ident.

2

AGE

				6												7												8												9											
3	2	1	S	11	10	9	8	7	6	5	4	3	2	1	S	11	10	9	8	7	6	5	4	3	2	1	S	11	10	9	8	7	6	5	4	3	2	1	S	11	10	9	8	7	6	5	4	3	2	1	S
i	i	i	i	Δ	Δ	Δ	Δ	Δ	Δ	Δ	Δ	Δ	Δ	Δ	Δ	r	r	l	Δ	Δ	Δ	Δ	Δ	Δ	Δ	Δ	Δ	Δ	Δ	Δ	Δ	Δ	Δ	Δ	Δ	Δ	Δ	Δ	Δ	Δ	Δ	Δ	Δ	Δ	Δ	Δ	Δ	Δ	Δ	Δ	Δ	Δ
M	E	Δ	Δ	Processing Identification (see below)												Δ	P	S	N	Δ	R	P	R	T	r	r	l																									
	J			H						G						F					E							D								C				B								A			

				6												7												8												9											
3	2	1	S	11	10	9	8	7	6	5	4	3	2	1	S	11	10	9	8	7	6	5	4	3	2	1	S	11	10	9	8	7	6	5	4	3	2	1	S	11	10	9	8	7	6	5	4	3	2	1	S

				6												7												8												9											
3	2	1	S	11	10	9	8	7	6	5	4	3	2	1	S	11	10	9	8	7	6	5	4	3	2	1	S	11	10	9	8	7	6	5	4	3	2	1	S	11	10	9	8	7	6	5	4	3	2	1	S

FICATION (WORD 6 ABOVE)

DENT.	
Δ	Δ
Δ	Δ
Δ	Δ
Δ	Δ
Δ	Δ
Δ	Δ

or Dptr. point Δ Aircraft Ident.

3

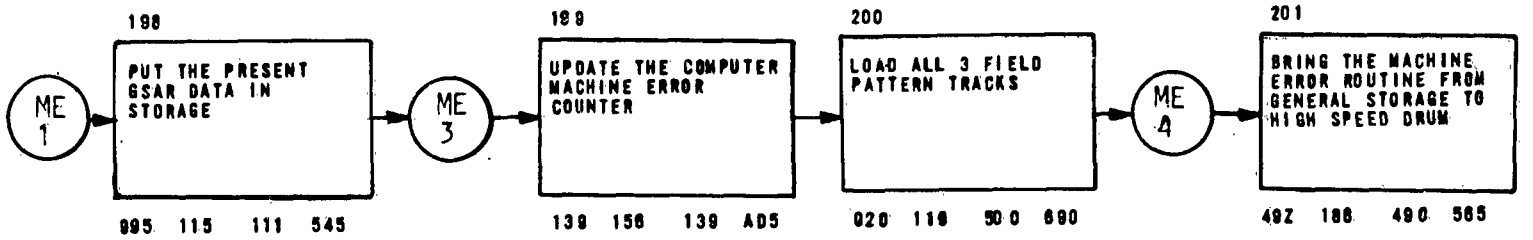

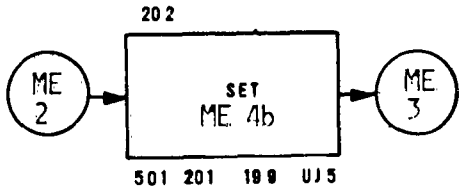

2nd MACHINE ERROR OCCURED BEFORE RECOVERY COMPLETED FROM ORIGINAL MACHINE ERROR

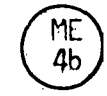

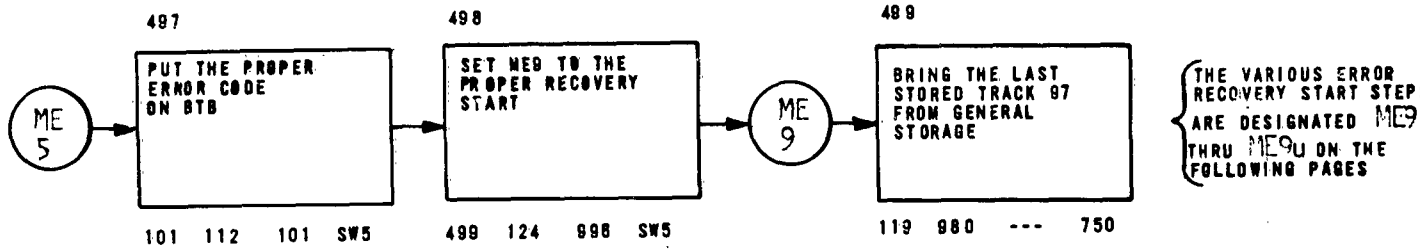

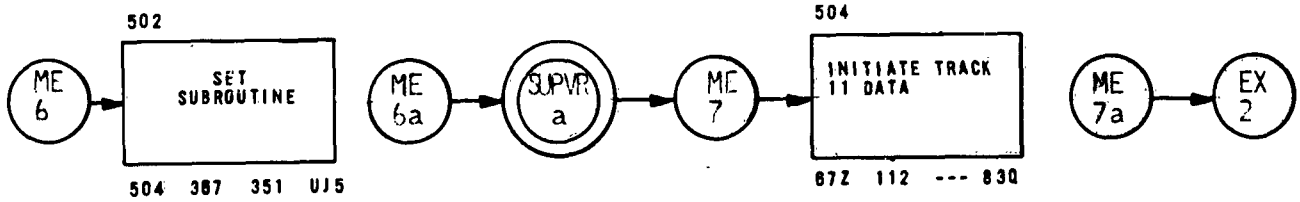

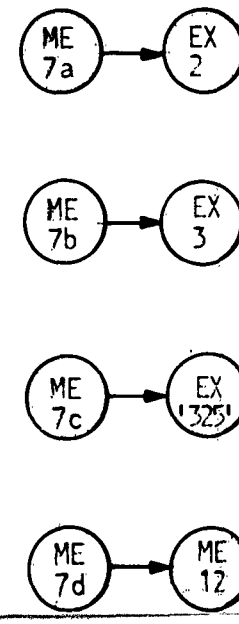

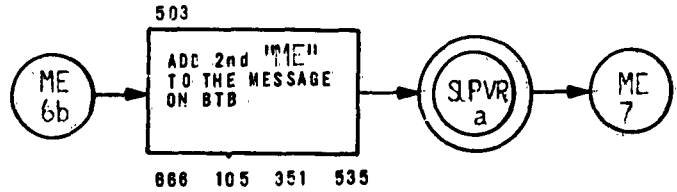

2nd MACHINE ERROR

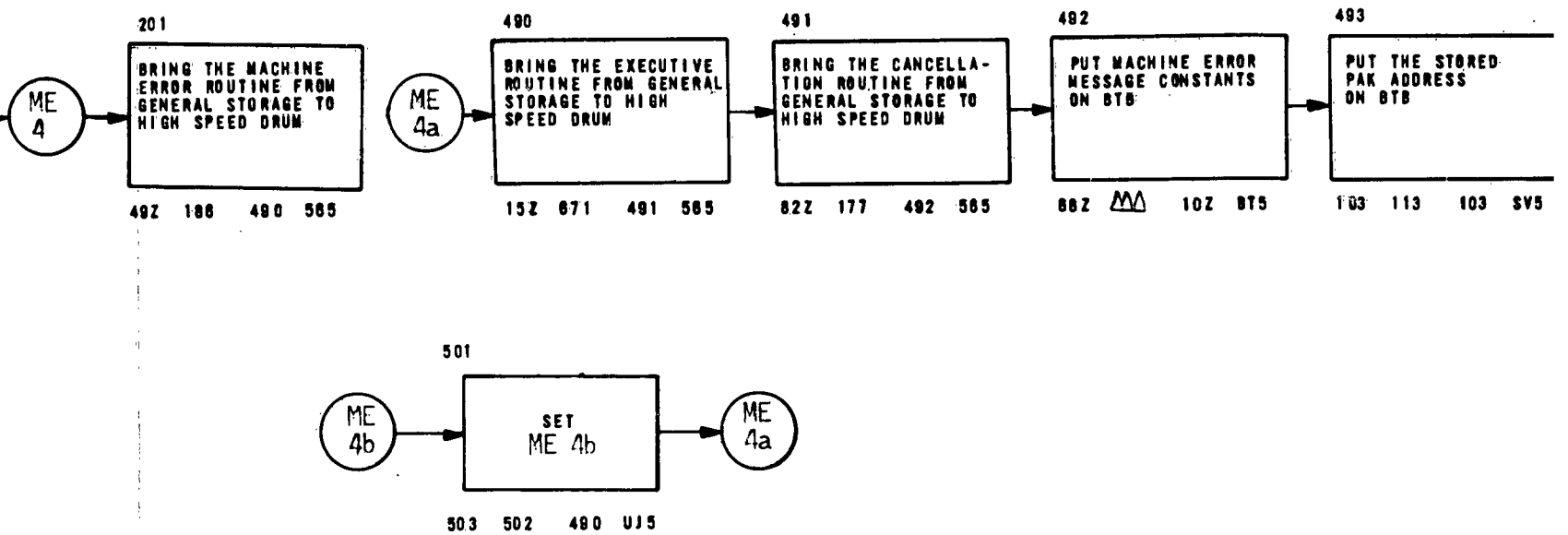

THE VARIOUS ERROR RECOVERY START STEPS ARE DESIGNATED ME9a THRU ME9u ON THE FOLLOWING PAGES

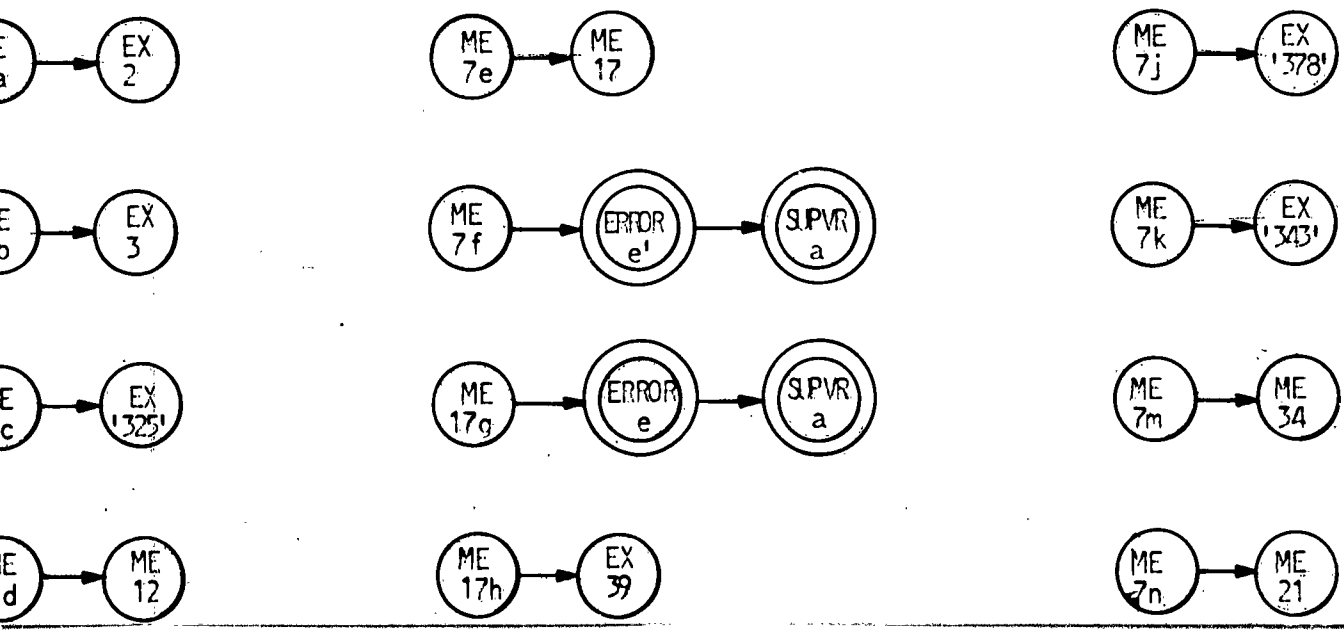

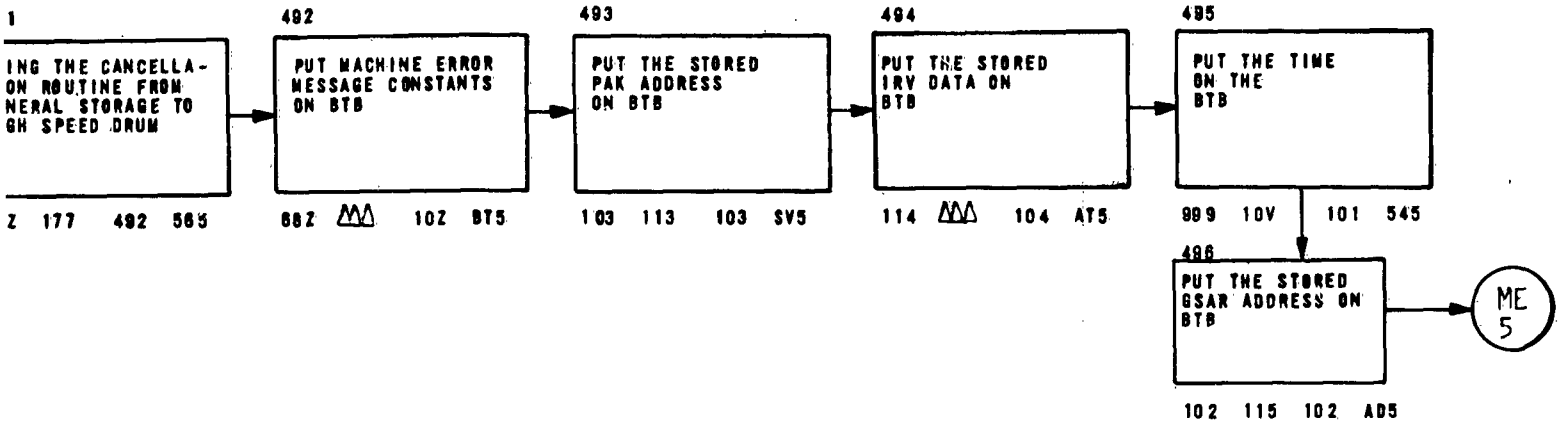
1
ING THE CANCELLA-
ON ROUTINE FROM
NERAL STORAGE TO
GH SPEED DRUM
Z 177 492 565
492
PUT MACHINE ERROR
MESSAGE CONSTANTS
ON BTB
68Z 102 BT5
493
PUT THE STORED
PAK ADDRESS
ON BTB
103 113 103 SV5
494
PUT THE STORED
IRV DATA ON
BTB
114 104 AT5
495
PUT THE TIME
ON THE
BTB
999 10V 101 545
496
PUT THE STORED
GSAR ADDRESS ON
BTB
102 115 102 AD5
ME
5

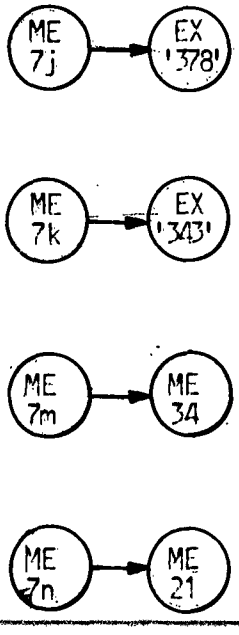
ME
7j
EX
'378'
ME
7k
EX
'343'
ME
7m
ME
34
ME
7n
ME
21

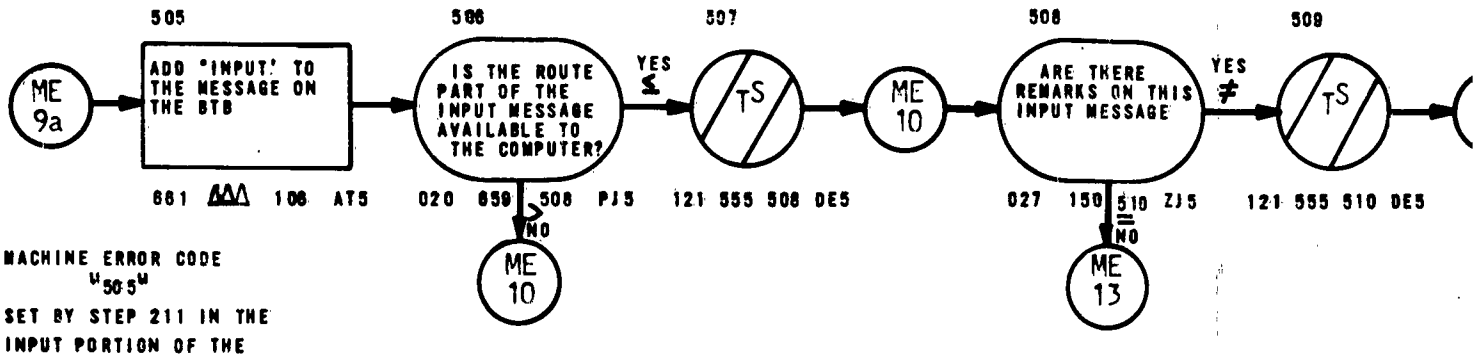

MACHINE ERROR CODE
"505"
SET BY STEP 211 IN THE
INPUT PORTION OF THE
EXECUTIVE ROUTINE

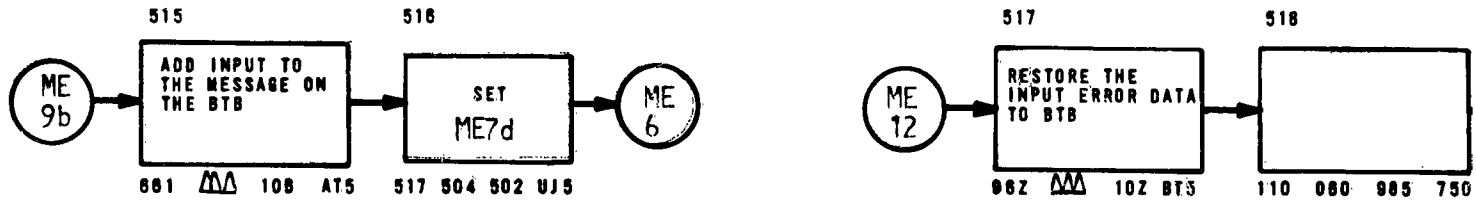

MACHINE ERROR CODE
"515"
SET BY THE INPUT
ERROR PORTION OF THE
EXECUTIVE ROUTINE

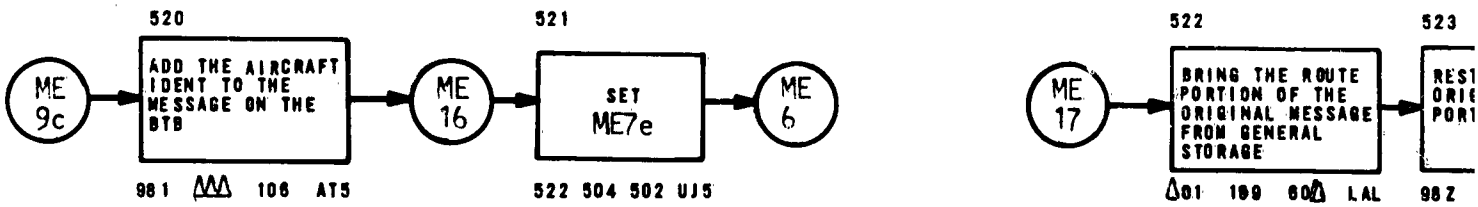

MACHINE ERROR CODE
"520"
SET BY STEPS 221 AND
240 IN THE INITIAL
PROCESSING PORTION OF
THE EXECUTIVE ROUTINE

1

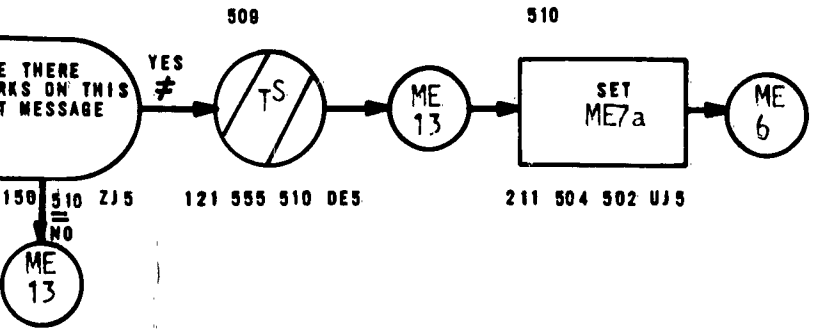
509
510
E THERE
RKS ON THIS
T MESSAGE
YES
≠
TS
ME 13
SET ME7a
ME 6
150 510 ZJ5
121 555 510 DE5
211 504 502 UJ5
NO
ME 13

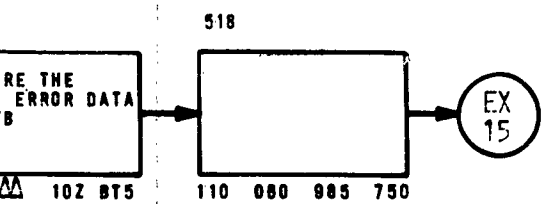
518
RE THE
ERROR DATA
B
EX 15
10Z BT5
110 080 985 750

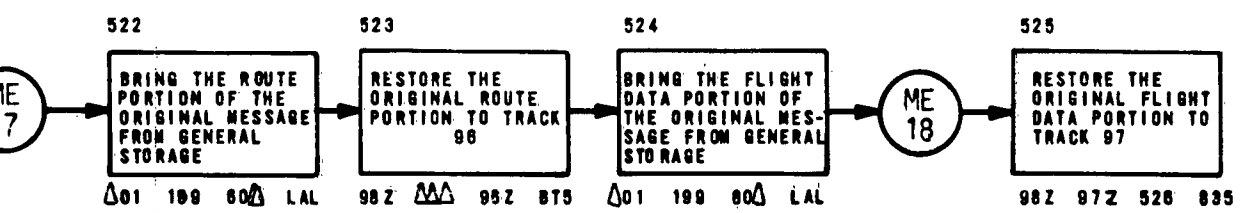
522
523
524
525
E
7
BRING THE ROUTE PORTION OF THE ORIGINAL MESSAGE FROM GENERAL STORAGE
RESTORE THE ORIGINAL ROUTE PORTION TO TRACK 96
BRING THE FLIGHT DATA PORTION OF THE ORIGINAL MESSAGE FROM GENERAL STORAGE
ME 18
RESTORE THE ORIGINAL FLIGHT DATA PORTION TO TRACK 97
01 199 60 LAL
98Z 95Z BT5
01 199 60 LAL
98Z 97Z 526 835

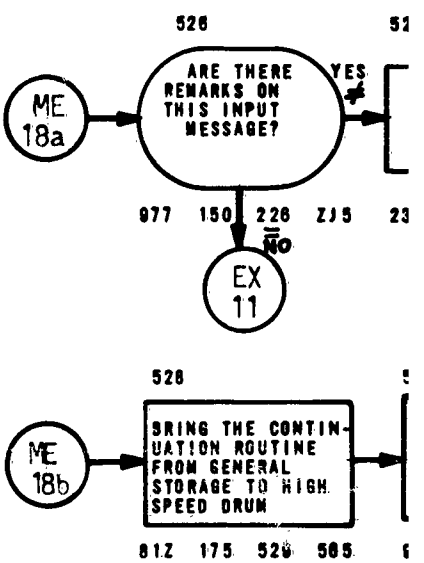
526
ME 18a
ARE THERE REMARKS ON THIS INPUT MESSAGE?
YES
≠
977 150 226 ZJ5
NO
EX 11
528
ME 18b
BRING THE CONTINUATION ROUTINE FROM GENERAL STORAGE TO HIGH SPEED DRUM
81Z 175 526 585

2

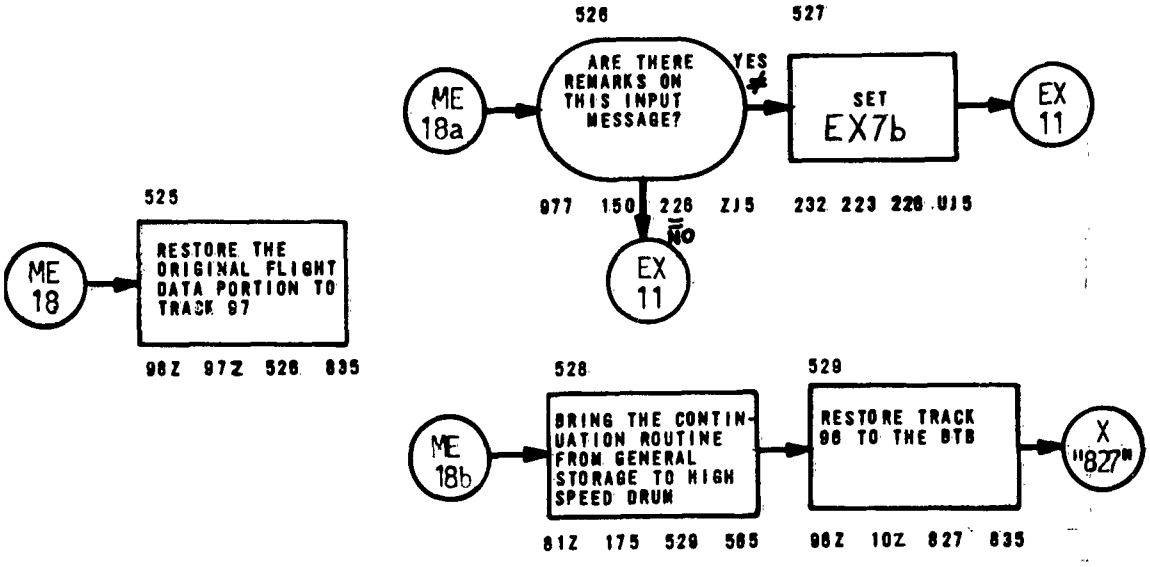
526
527
ME 18a
ARE THERE REMARKS ON THIS INPUT MESSAGE?
YES
SET EX7b
EX 11
977 150 226 ZJ5
232 223 226 UJ5
NO
EX 11
525
ME 18
RESTORE THE ORIGINAL FLIGHT DATA PORTION TO TRACK 97
96Z 97Z 526 835
528
529
ME 18b
BRING THE CONTINUATION ROUTINE FROM GENERAL STORAGE TO HIGH SPEED DRUM
RESTORE TRACK 96 TO THE BTB
X "827"
81Z 175 529 565
96Z 10Z 827 835

MACHINE ERROR CODE
"530"
SET BY STEPS 430 AND 440 AT THE START OF THE AIRWAY ROUTINE.

MACHINE ERROR CODE
"540"
SET BY STEP 274 OF THE EXECUTIVE ROUTINE FOR THE 1st ITERATION THRU THE TIME COMPUTATION, TAILORING, AND PRIMT-OUT ROUTINES.

MACHINE ERROR CODE
"550"
SET BY STEP 858 OF THE CANCELLATION AND ERASE ROUTINE FOR A CANCELLATION MESSAGE.

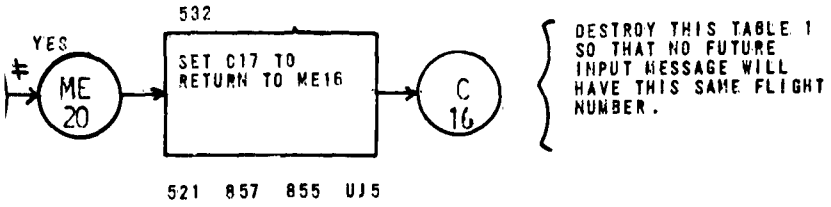

DESTROY THIS TABLE 1 SO THAT NO FUTURE INPUT MESSAGE WILL HAVE THIS SAME FLIGHT NUMBER.

BLES
BEEN
RESTART
MESSAGE

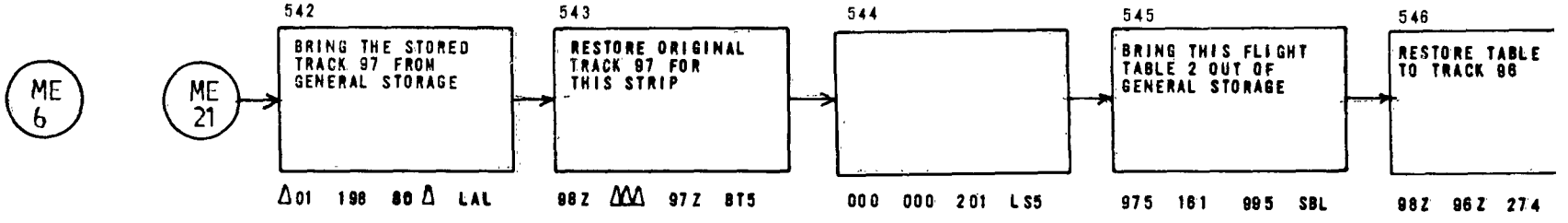

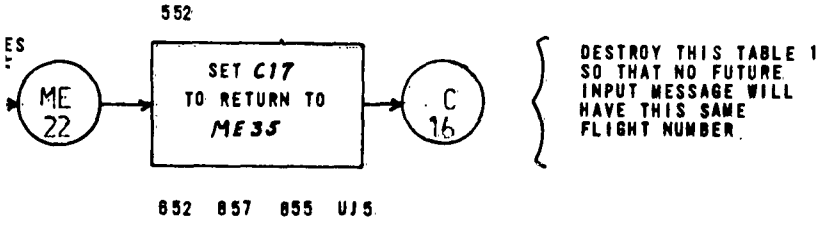

DESTROY THIS TABLE 1 SO THAT NO FUTURE INPUT MESSAGE WILL HAVE THIS SAME FLIGHT NUMBER.

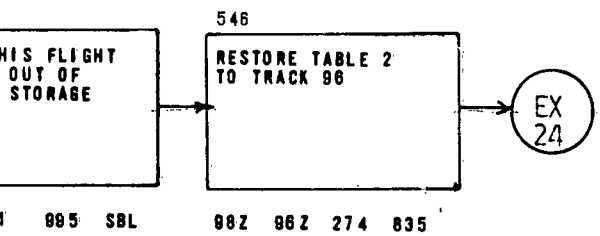
546
HIS FLIGHT
OUT OF
STORAGE
RESTORE TABLE 2
TO TRACK 96
EX
24
995 SBL
98Z 96Z 274 835

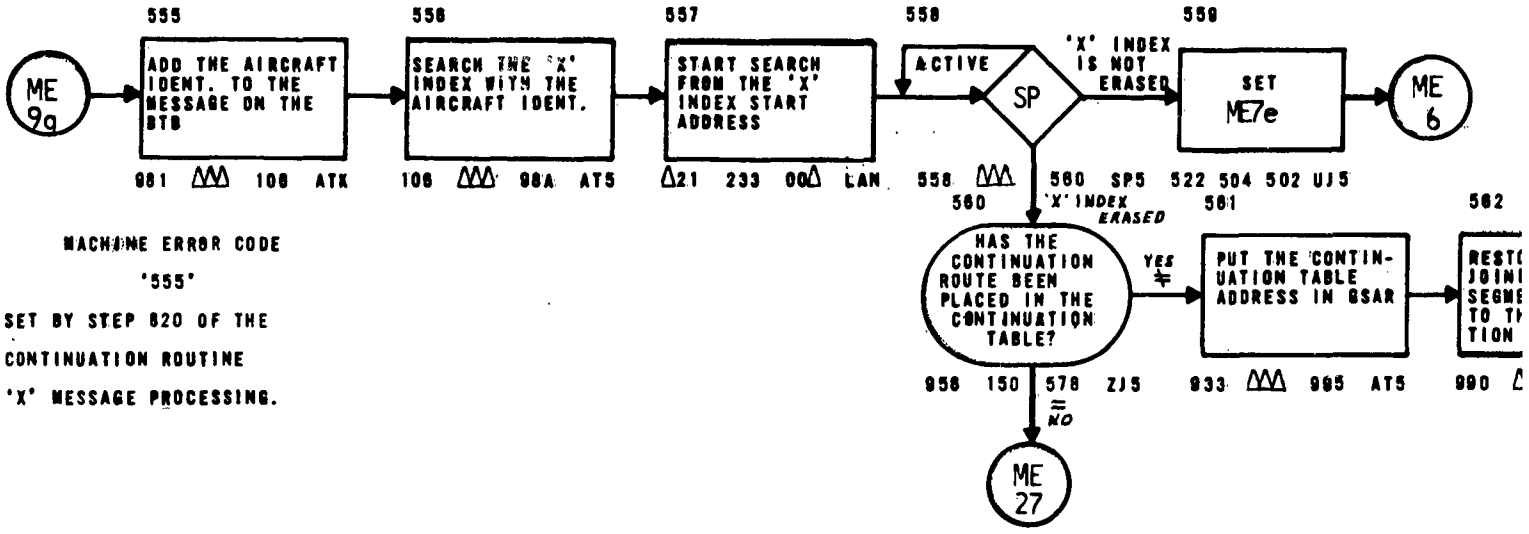

MACHINE ERROR CODE

'555'

SET BY STEP 820 OF THE CONTINUATION ROUTINE 'X' MESSAGE PROCESSING.

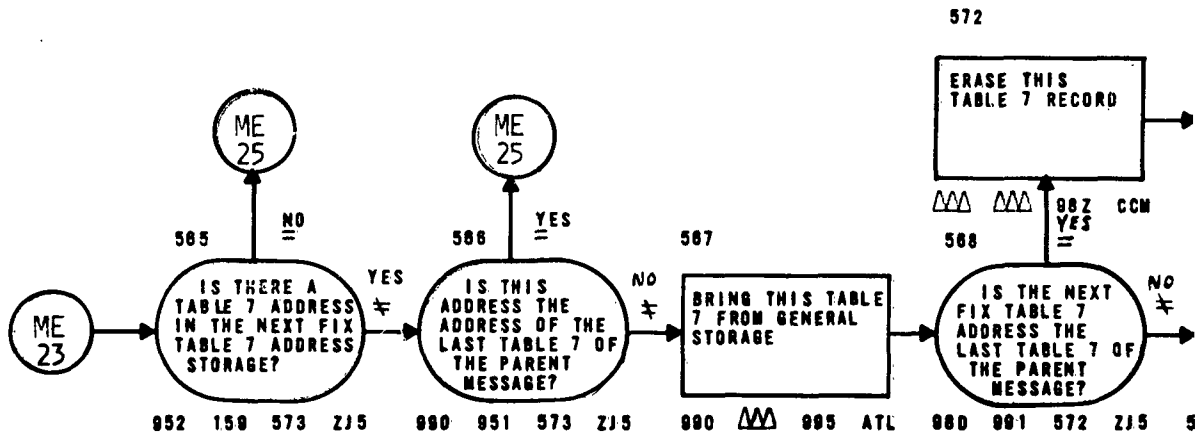

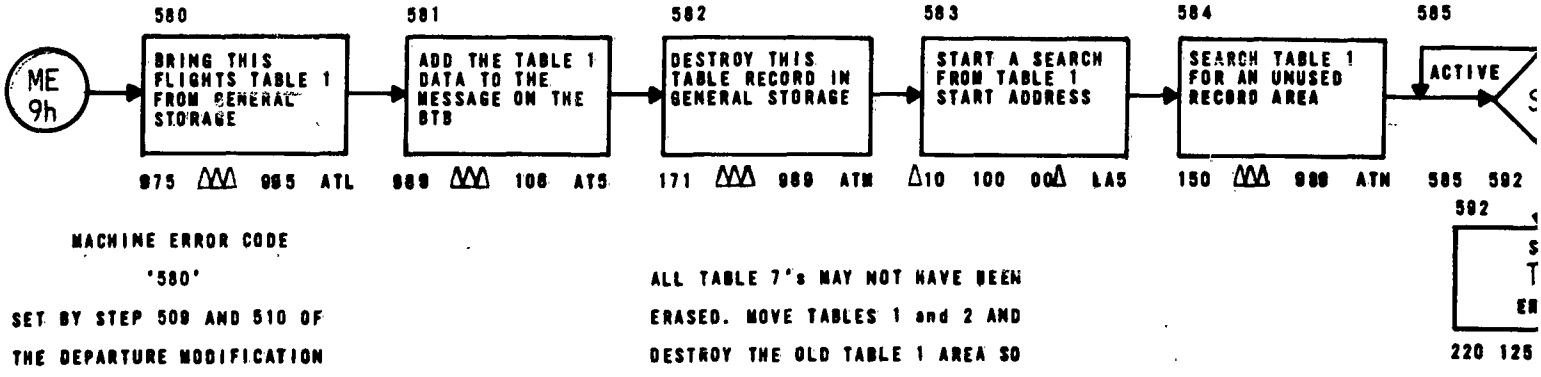

MACHINE ERROR CODE

'580'

SET BY STEP 509 AND 510 OF THE DEPARTURE MODIFICATION ROUTINE . ROUTE CHANGE.

ALL TABLE 7's MAY NOT HAVE BEEN ERASED. MOVE TABLES 1 and 2 AND DESTROY THE OLD TABLE 1 AREA SO THAT NO FUTURE MESSAGE COULD HAVE THIS SAME FLIGHT NUMBER.

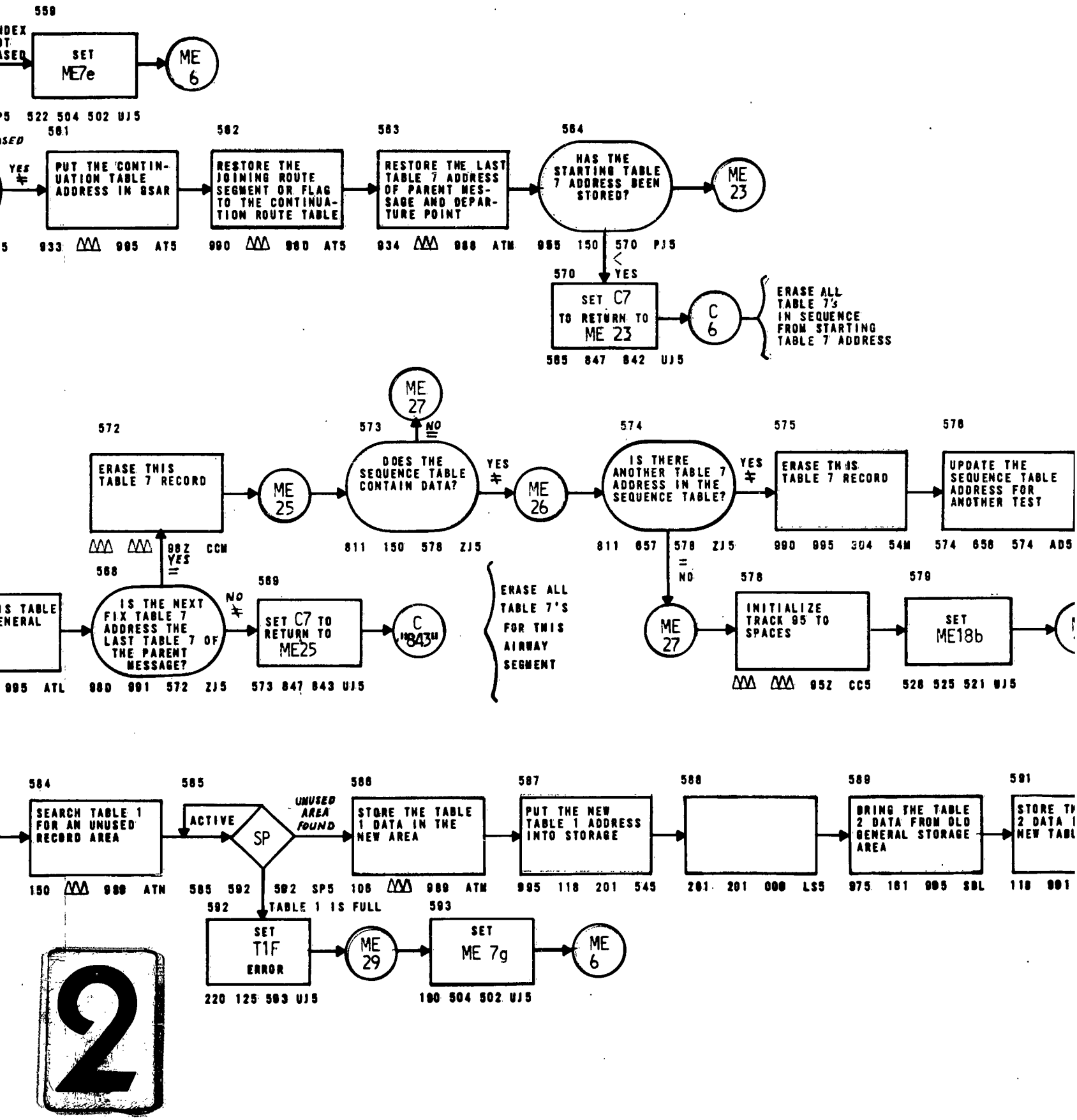
559
SET ME7e
ME 6
522 504 502 UJ5
561
PUT THE CONTINUATION TABLE ADDRESS IN 8SAR
933 995 AT5
562
RESTORE THE JOINING ROUTE SEGMENT OR FLAG TO THE CONTINUATION ROUTE TABLE
990 980 AT5
563
RESTORE THE LAST TABLE 7 ADDRESS OF PARENT MESSAGE AND DEPARTURE POINT
934 988 ATM
564
HAS THE STARTING TABLE 7 ADDRESS BEEN STORED?
ME 23
955 150 570 PJ5
YES
570
SET C7 TO RETURN TO ME 23
C 6
565 847 842 UJ5
ERASE ALL TABLE 7's IN SEQUENCE FROM STARTING TABLE 7 ADDRESS
572
ERASE THIS TABLE 7 RECORD
ME 25
98Z CCM
573
DOES THE SEQUENCE TABLE CONTAIN DATA?
NO
ME 27
YES
ME 26
811 150 578 ZJ5
574
IS THERE ANOTHER TABLE 7 ADDRESS IN THE SEQUENCE TABLE?
YES
811 657 578 ZJ5
575
ERASE THIS TABLE 7 RECORD
990 995 304 54M
576
UPDATE THE SEQUENCE TABLE ADDRESS FOR ANOTHER TEST
574 658 574 AD5
NO
ME 27
578
INITIALIZE TRACK 95 TO SPACES
95Z CC5
579
SET ME18b
528 525 521 UJ5
568
IS THE NEXT FIX TABLE 7 ADDRESS THE LAST TABLE 7 OF THE PARENT MESSAGE?
YES
NO
995 ATL
980 991 572 ZJ5
569
SET C7 TO RETURN TO ME25
C "843"
573 847 843 UJ5
ERASE ALL TABLE 7'S FOR THIS AIRWAY SEGMENT
584
SEARCH TABLE 1 FOR AN UNUSED RECORD AREA
150 989 ATN
585
ACTIVE
SP
UNUSED AREA FOUND
585 592
592 SP5
TABLE 1 IS FULL
586
STORE THE TABLE 1 DATA IN THE NEW AREA
106 989 ATM
587
PUT THE NEW TABLE 1 ADDRESS INTO STORAGE
995 118 201 545
588
281 201 000 LS5
589
BRING THE TABLE 2 DATA FROM OLD GENERAL STORAGE AREA
975 161 995 SBL
591
STORE TH 2 DATA I NEW TABL
118 991
592
SET T1F ERROR
220 125 593 UJ5
ME 29
593
SET ME 7g
190 504 502 UJ5
ME 6

2

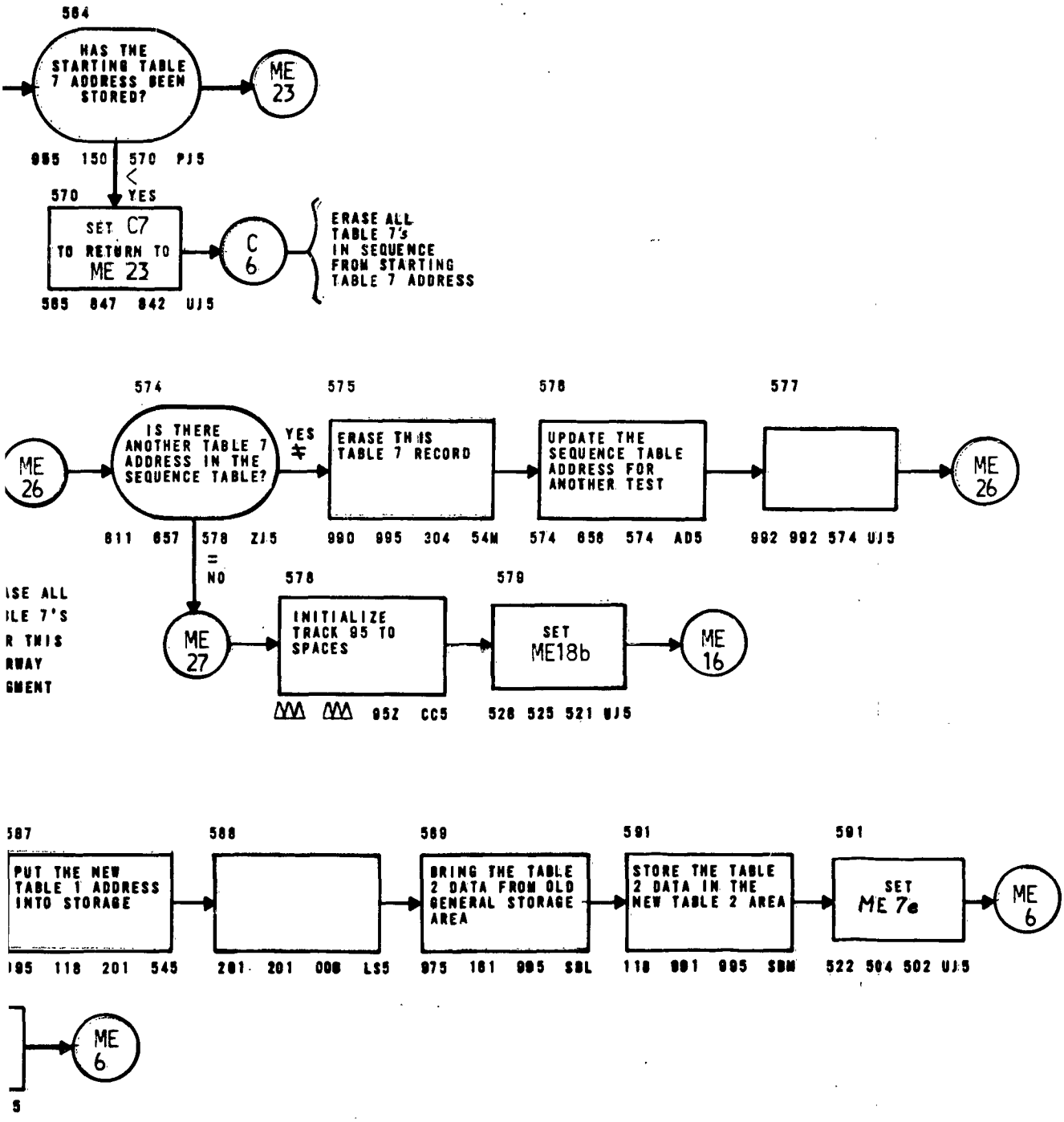
564
HAS THE STARTING TABLE 7 ADDRESS BEEN STORED?
ME 23
985 150 570 PJ5
570 < YES
SET C7 TO RETURN TO ME 23
C 6
ERASE ALL TABLE 7's IN SEQUENCE FROM STARTING TABLE 7 ADDRESS
565 847 842 UJ5
574
575
576
577
ME 26
IS THERE ANOTHER TABLE 7 ADDRESS IN THE SEQUENCE TABLE?
YES ≠
ERASE THIS TABLE 7 RECORD
UPDATE THE SEQUENCE TABLE ADDRESS FOR ANOTHER TEST
ME 26
811 657 578 ZJ5
990 995 304 54M
574 658 574 AD5
992 992 574 UJ5
= NO
578
579
ME 27
INITIALIZE TRACK 95 TO SPACES
SET ME18b
ME 16
95Z CC5
526 525 521 UJ5
587
588
589
591
591
PUT THE NEW TABLE 1 ADDRESS INTO STORAGE
BRING THE TABLE 2 DATA FROM OLD GENERAL STORAGE AREA
STORE THE TABLE 2 DATA IN THE NEW TABLE 2 AREA
SET ME 7e
ME 6
118 201 545
201 201 006 LS5
975 161 995 SBL
118 991 995 SBM
522 504 502 UJ5
ME 6

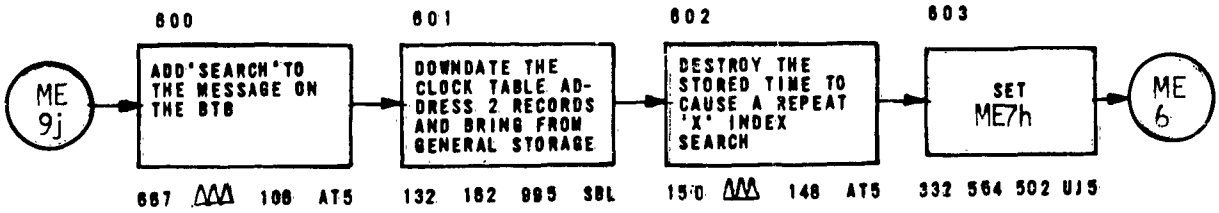

MACHINE ERROR CODE

'600'

SET BY STEPS 362 AND 318 IN THE 'X' INDEX AND TABLE 9 SEARCH PORTION OF THE EXECUTIVE ROUTINE.

MA

SET BY

EXECUTI

RECORD

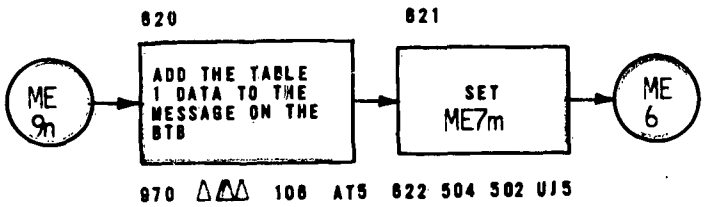

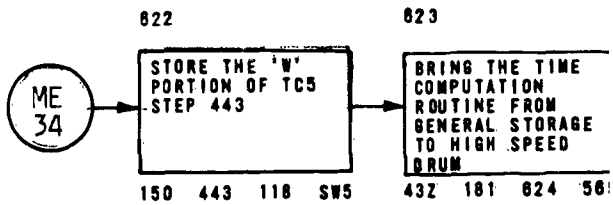

MACHINE ERROR CODE

'620'

SET BY STEPS 695 OF THE HSP PRINTOUT AND 690 OF THE TYPEWRITER PRINTOUT ROUTINES.

TIME COMPUTATION, TAILORING AND PRINTOUT ROUTINES AFTER THE 1ST STRIP.

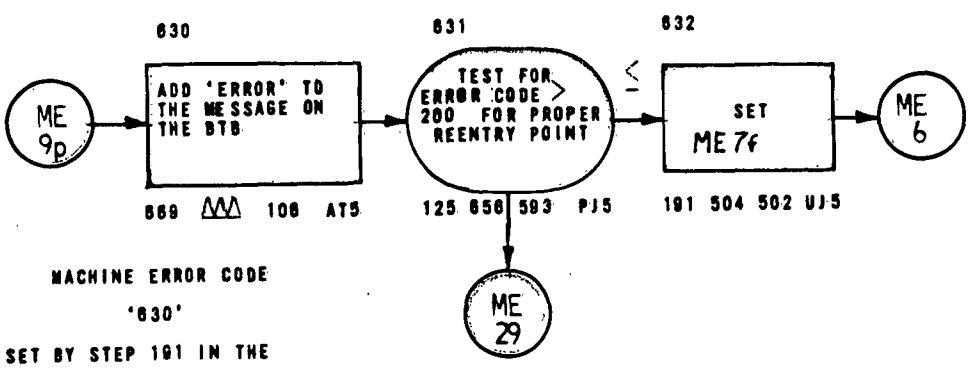

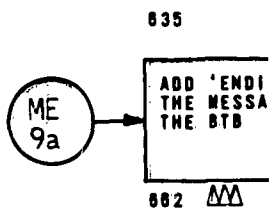

MACHINE ERROR CO

'630'

SET BY STEP 191 IN THE ERROR PORTION OF THE EXECUTIVE ROUTINE.

MACHINE ERROR CO

'635'

SET BY STEP 324 OF TH EXECUTIVE ROUTINE. END ESSING.

1

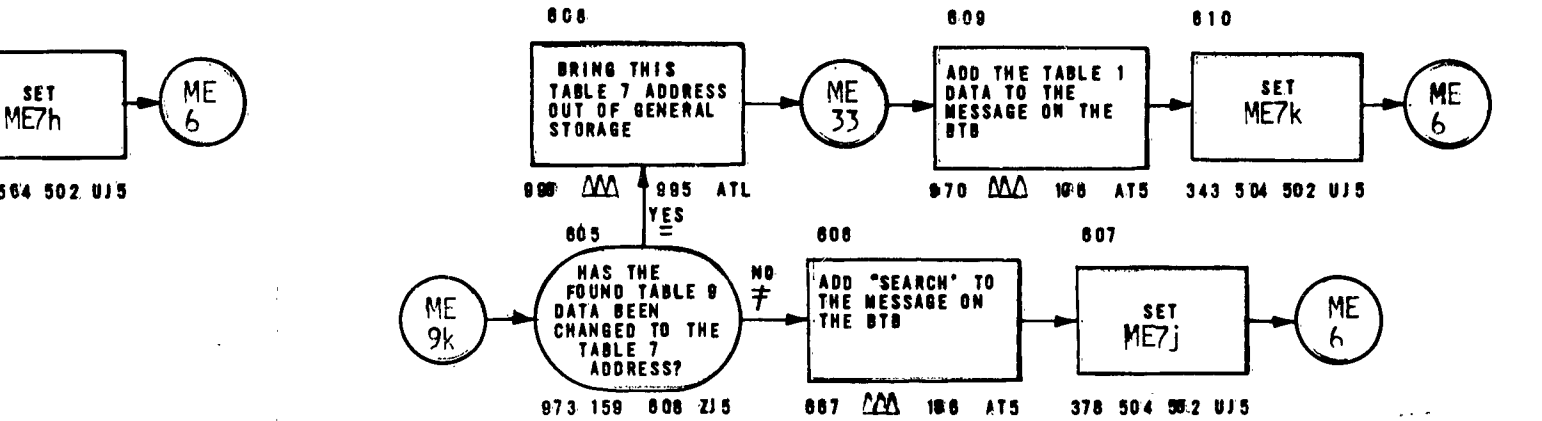

MACHINE ERROR CODE

'605'

SET BY STEP 378 OF THE EXECUTIVE ROUTINE. TABLE 9 RECORD FOUND.

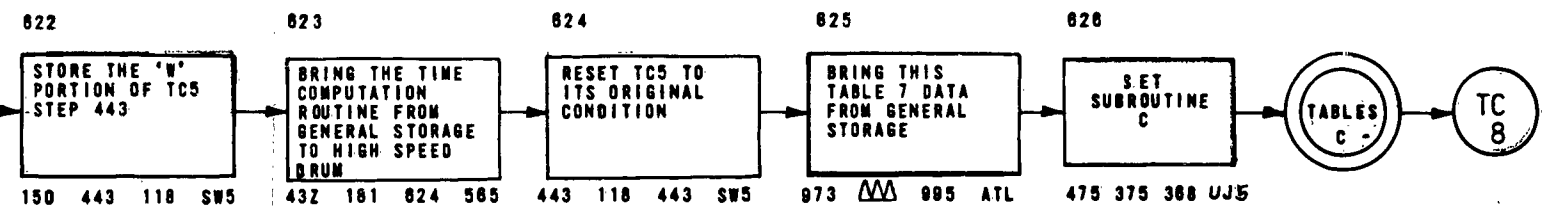

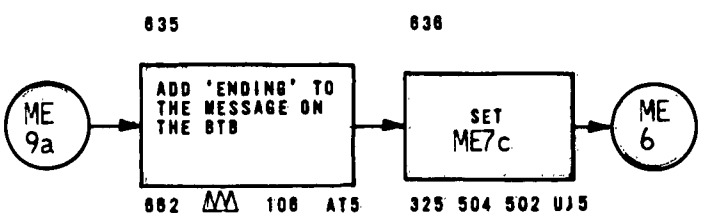

MACHINE ERROR CODE

'635'

SET BY STEP 324 OF THE EXECUTIVE ROUTINE, ENDING PROCESSING.

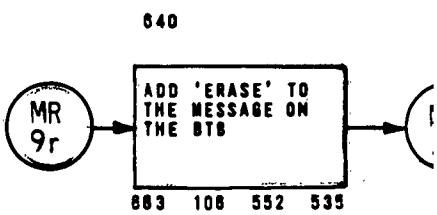

MACHINE ERROR CODE

'640'

SET BY STEP 326 OF THE EXECUTIVE ROUTINE. NORMAL DATA ERASE.

2

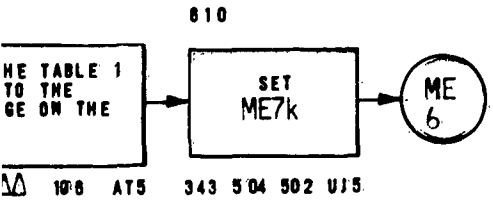

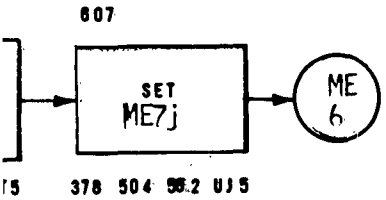

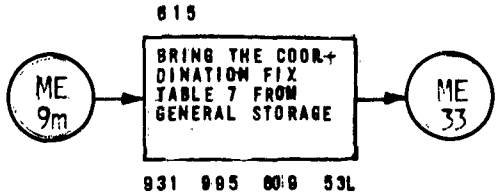

MACHINE ERROR CODE

'615'

SET BY STEP 833 OF THE TAILORING ROUTINE ICM PROCESSING.

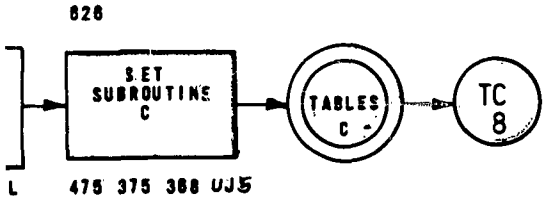

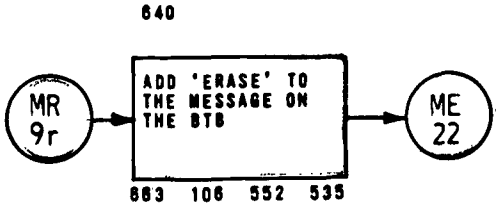

MACHINE ERROR CODE

'640'

SET BY STEP 326 OF THE EXECUTIVE ROUTINE. NORMAL DATA ERASE.

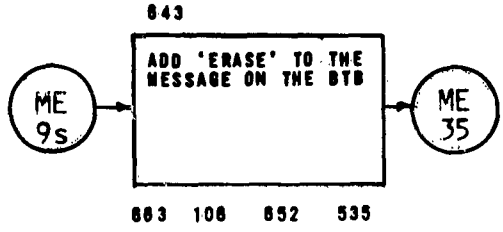

MACHINE ERROR CODE
'843'

SET BY STEP 857 OF THE CANCELLATION AND ERASE ROUTINE. ERASE OF DATA FOLLOWING AN ERROR.

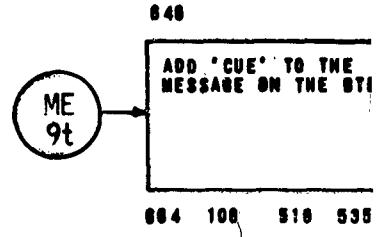

MACHINE ERROR CODE
'848'

SET BY STEPS 224 OF THE
482 OF THE TIME COMPUTAT
728 OF THE HSP PRINTOUT,
THE TYPEWRITER PRINTOUT
CUE MESSAGE PROCESSING.

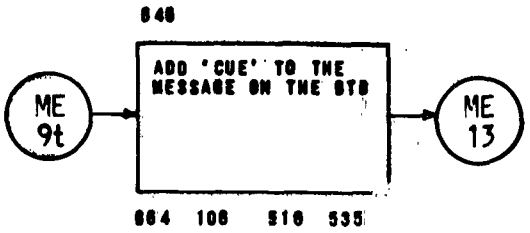

MACHINE ERROR CODE
'848'
SET BY STEPS 224 OF THE EXECUTIVE, 482 OF THE TIME COMPUTATION, 700 AND 729 OF THE HSP PRINTOUT, AND 723 OF THE TYPEWRITER PRINTOUT ROUTINES.
CUE MESSAGE PROCESSING.

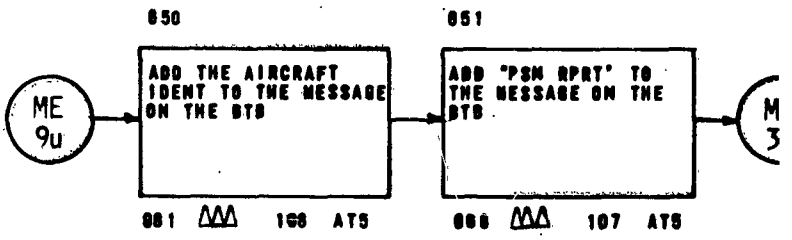

MACHINE ERROR CODE
'850'
SET BY STEP *IN THE POSITION REPORT ROUTINE*

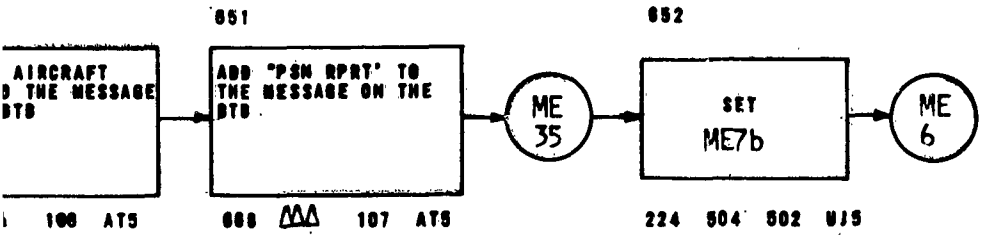

ERROR CODE
'650'
TEP IN THE
EPORT ROUTINE

Working Storage

812	Direct Route Sequence Table Track

931	Δ	Δ	Δ	Δ	5	Ø	X	X	X	X	X	Δ	Coordination fix Table 7 address.
933	Δ	Δ	Δ	Δ	Ø	Ø	X	X	X	X	X	Δ	Continuation route address
934	5	Ø	X	X	X	X	X	Δ	X	X	X	X	Word 8 of the Continuation Route Table before route is stored.
921	Δ	Δ	Δ	Δ	5	Ø	X	X	X	X	X	Δ	Last Table 7 address of a parent message.
952	Δ	Δ	Δ	Δ	5	Ø	X	X	X	X	X	Δ	Next fix Table 7 address.
955	Δ	Δ	Δ	Δ	5	Ø	X	X	X	X	X	Δ	Starting Table 7 address.
956	X	X	X	X	X	X	X	X	X	X	X	X	Joining route segment or flag for continuation process.
97Ø	X	X	X	X	Δ	X	X	X	X	X	X	X	Table 1 data.
973	Δ	Δ	Δ	Δ	5	Ø	X	X	X	X	X	Δ	This Table 7 address.
975	Δ	Δ	Δ	Δ	1	Ø	1	Ø	X	X	X	Δ	This Table 1 address.
977	X	X	X	X	X	X	X	X	X	X	X	X	1st word of remarks.

The remarks beside the above constants, factors and working storages define the prime purpose as used in this routine. The flow charts will define any secondary usage of these locations.

112	P	A	R	G	S	P	T	M	O	A	T	H	Error designator codes for the supervisor's error message.
113	Δ	Δ	Δ	-	-	-	Δ	Δ	Δ	Δ	Δ	Δ	Storage for error PAK data.
114	-	-	-	-	-	-	-	-	-	-	-	-	Storage for error instruction revolver data.
115	Δ	Δ	Δ	Δ	-	-	-	-	-	-	-	Δ	Storage for error GSAR data.
117	Δ	Δ	Δ	Δ	Δ	Δ	Δ	Δ	2	Ø	2	Ø	Starting address for 2nd machine error in sequence.
124	Δ	Δ	Δ	Δ	Δ	Δ	6	Ø	Ø	Δ	Δ	Δ	Machine error code storage.
125	Δ	1	1	1	1	4	-	-	-	Δ	Δ	Δ	Error designator address.
132	Δ	Δ	Δ	Δ	1	1	2	8	6	Ø	Ø	Δ	Current Clock Table address.
139	X	X	X	X	X	r							Computer machine error counter.
148	Δ	Δ	Δ	Δ	Δ	Δ	Δ	X	X	X	X	Δ	Current Clock Time
15Ø	Δ	Δ	Δ	Δ	Δ	Δ	Δ	Δ	Δ	Δ	Δ	Δ	Spaces constant.
156	Δ	Δ	Δ	Δ	Δ	1	Δ	Δ	Δ	Δ	Δ	Δ	One constant.
159	i	i	i	i	5	Ø	i	i	i	i	i	i	Table 7 address comparator.
161	Ø	Ø	Ø	Ø	1	Ø	1	Ø	Ø	Ø	Ø	Ø	Table 1 address modifier.
162	Δ	Δ	Δ	Δ	Δ	Δ	Δ	Δ	Δ	Δ	4	+	Clock Table downdate constant.
171	r	/	1	Δ	Δ	B	O	U	T	r	r	|	Constant to destroy Table 1.
175	8	9	Z	Δ	Ø	1	1	5	5	8	Ø	Δ	Continuation routine load factor.
177	8	5	Z	Δ	Ø	1	1	6	6	Ø	Ø	Δ	Cancellation and erase routine load factor.
181	4	8	Z	Δ	Ø	1	1	2	6	Ø	Ø	Δ	Time Computation routine load factor.
186	6	8	Z	Δ	Ø	1	1	1	5	Ø	Ø	Δ	Machine Error routine load factor.
655	i	i	i	i	i	i	5	Ø	Ø	i	i	i	Error code comparator.
656	i	i	i	i	i	i	2	Ø	Ø	i	i	i	Error code comparator.
657	i	i	i	i	9	9	9	Z	i	i	i	i	End of direct sequence table.
658	0	0	1	Δ	Δ	Δ	Δ	Δ	Δ	Δ	Δ	Δ	Sequence Table update constant.
659	i	i	i	i	i	i	i	i	i	i	Δ	i	Input track comparator.

661	I	N	P	U	T	r	r	|	Δ	Δ	Δ	Δ	Supervisor's machine error message constants.
662	E	N	D	I	N	G	r	r	|	Δ	Δ	Δ	
663	E	R	A	S	E	r	r	|	Δ	Δ	Δ	Δ	
664	C	U	E	r	r	|	Δ	Δ	Δ	Δ	Δ	Δ	
666	Δ	r	t	2	N	D	Δ	Δ	M	E	Δ	Δ	
667	Δ	P	S	N	Δ	R	P	R	T	r	r	|	
669	E	R	R	O	R	r	r	|	Δ	Δ	Δ	Δ	

6 7 Z -	Original Track 11 data to initialize Track 11

68Ø	Δ	Δ	Δ	Δ	Δ	Δ	?	/	M	Δ	E	β	Supervisor's machine error message constants.
681	Δ	Δ	U	F	C	Δ	-	-	-	Δ	G	S	
682	A	R	-	Δ	Δ	Δ	Δ	Δ	Δ	Δ	-	P	
683	A	K	Δ	-	-	-	Δ	I	R	V	Δ	Δ	
684	-	-	-	-	-	-	-	-	-	-	-	-	
685	Δ	r	t	i	i	i	i	i	i	i	i	i	
686	Δ	Δ	Δ	Δ	Δ	Δ	Δ	Δ	Δ	Δ	Δ	Δ	
687	r	r	|	Δ	Δ	Δ	Δ	Δ	Δ	Δ	Δ	Δ	

APPENDIX XVIII

MAIN FRAME PLUGBOARD WIRING CHARTS

MODEL 1 UNIVAC FILE-COMPUTER EXTERNAL PROGRAM CHART

CUSTOMER: NAFEC Phase I Lab.	APPLICATION: Operational Plugboard	PROGRAMMED BY: DATE October 30, 1961	PROGRAM NO.

STEP NO.	V_1	V_1 SHIFT	PROCESS	V_2	V_2 SHIFT	R	R SHIFT	NEXT STEP	REMARKS	IN
51	U adr	Usrv	CP	Vadr	Vsrv			BR 1	Jump Negative	
52	IRV		AT			PAK	R2	Uni2-2	W of IRV → PAK and NI	UNI 3 out
53	V1 51	V1 SH 51	PR52		V2 SH 51	Vadr	V1 SH 55	Uni6-2	AT and JUMP	
54	V1 52		PR53			SRV		IN 55	AT and SHIFT	
55	V1 53	Wsrv	PR54			R53		UNI2-1		OUT 54
56	V adr		PR55			GSAR		RUR-1		
57	V1 54		+CK	FS2-9		IRV		NI		RUR1
58	GSBZ		BT			Uadr		IN59	Load Sub-Program to HSD	
59	GSAR		PR57	V2 57	L1	R56		RUR-2		OUT 58
60	V1 57	R9	PR51	V2 51	R9			BR 4		RUR2
61	V1 60		PR59	FS2-8	L9	R57		NI		BUS g17
62	V1 55	CT2	PR56			CDR		NI	Determine Flight Direction	
63	CT18A		÷ SQ	CT18B		CT18C		64		OUT 68
64	R66		PR61	V2 63		R63		65		OUT 63
65	V1 64		ML	W adr		R64		66		OUT 64
66	V1 65		PR64	V2 65		R65	R1	67	Square Root	OUT 65
67	V1 66		PR60	V2 64				BR 5		OUT 66
68	V1 67		PR62			V2 67		IN63		BUS d17
69	CT24A	CT12A	PR66	R 61	CT12B	R59		RUR-3	Load Patterns	NST41A
70	GSBZ		BT			CT12C		BUS c28		RUR3
71	N1 62	V1 SH 53	PR67	V2 60	V2 SH 53			BR 2	Jump Positive	
72	RA	CT24B	PR68		CT24C	CT42D	CT24D	BUSb28	Shift A/C Identification	ST41A
73	V1 71		PR 69	V2 71		R62		Cdr pulse in		
74	CT32	Cdr in-1	PR 72			R52		BUS V11	Determine message kind	BUS R27
75	V2 69	EA 5	PR 74			R69		RUR-4	Ten instruction subroutine	
76	FS2-2	EA 3	PR 75			R74		NI	Start Address End or Day Rt.	
77	R77		PR 76			FS1-2	EA3	BUS V16		step cl. 1 out
78	V177		PR 77		CT7	V1 78		BUS U16	Machine Error	BUS U13
79	R82	L5	PR 78			FS1-3		IN80	Recovery	Del out PS 13
80	V1 75		PR 79			FS1-4		IN81		OUT 79
81	V1 82	EA6	PR 80			R76		BUS J2		OUT 80
82	V1 76	EA9	PR 81			R81		BUS W12	Plugboard Start	NS Alt SW 1
83	V1 91		BT			R55		UNI 6-1	BT and Jump	
84	RD		AT			FS2-3		UNI 7-1		BUS N13
85	PAK		PR84			I/O-0	EA4	BUS N17		BUS Q16
86	FS1-6	CT17A	PR85		CT48A	I/O-1	CT48B	CT16B		BUS M17
87	R84		PR86			CT39B		OE1 in	Tracker	NST16B
88	V1 80		PR87			R85		CT48C		BUS N16
89	CT33A	CT34A	PR88		CT34B	CT33B	CT35A	IN90		BUS I16
90	CT35B	V1 SH 89	PR89		V2 SH 89	CT36A	R SH 89	IN92		OUT 89
91	V1 73	V1 SH 71	PR71	V2 73	V2 SH 71			BR3	Jump Equal	
92	CT36B	V1 SH 90	PR90			CT36C		CT36D	Tracker	OUT 90
93										
94	FS1-7	R7	AT			PAK		BUS I2	Machine Error Recovery	BUS E13
95			CC			I/OB		CT22A	Tracker	BUX C16
96	FS1-8		PR92			FS1-8		BUS C18	Timing to Clear Selectors	Clear g 25
97	U adr	Cdr in Grp 1	PR94			CDR		BUS A18	Determine msg. kind for CUE	
98										

U 1356.3

MODEL 1 UNIVAC® FILE COMPUTER CONTROL CHART #1

CUSTOMER:	APPLICATION:	PROGRAMMED BY: DATE	PROGRAM NO.
NAFEC Phase 1 LAB	OPERATIONAL PLUGBOAED	Oct. 30, 1961	

DEMAND UNITS (DMD)

UTS	TEST IN	NOT READY	READY	DEMAND IN	DEMAND OUT	SPECIAL OUT	TRACK SWITCH
0							
1	NS T11A	TEST IN	DEMAND IN	READY	Bus v17	Bus w17	NS T9B
2							
3							
4	ST 11B	TEST IN	DEMAND IN	READY	ST10B	ST10A	ST9B
5							
6							
7							
8							
9							

UNIBUSES (U/B)

NO	IN	IN	IN	IN	OUT
1	BR1 +	BR1 Ø	BR2 -	BR2 Ø	NI
2	BR3 +	BR3 -	OUT 52	OUT 55	NI
3	UNI 4 OUT	RUR 4	BR1 -	BR3 Ø	IN 52
4	BR2 +	BR4 Ø	UNI 6 OUT	Clear PSH25	UNI 3 IN 4
5	DEL OUT PS6	DEL OUT PS7	DEL OUT PS8		CT41A
6			OUT 53	OUT 83	UNI 4 IN 2
7			Bus j28	OUT 84	CT11A
8					

START TO: C ALT SW 1

ERROR SIGNALS

TYPE	TO
PARITY	CT47A
÷ O'FLOW	+ - o' Flow
± O'FLOW	N o' Flow
N O'FLOW	ARITH.
ARITH.	CT46B
GS PROG	CT46A

HI-SPEED CONTROL LINES (HCL)

NO	IN	YES	NO
W			
X			
Y			
Z			

STEP CLEAR (SC)

NO	IN	OUT
1	ST46A	IN 77
2	ST 46B	Bus T23
3	ST 47A	PU PS 12
4		

STEP REPEAT (SR)

NO	FROM
1	
2	
3	
4	

FUNCTION SEQUENCE (FS)

NO	SET	PROBE	OUT
1			
2			
3			
4			

OUT EXPANDERS (OE)

NO	IN	~~IN~~ out 1	OUT 2
1	OUT 87	Bus G8	Bus b25
2	ST16B	Bus e25	Bus m28
3			
4			
5			
6			
7			
8			

FUNCTION DELAY (FD)

NO	IN_1	IN_2	OUT
A	Bus G17	Bus F17	TIMER ON
B			
C			
D			

OUTPUT CONTROL LINES (OCL)

NO	FROM	NO	FROM
A	ST9A	F	
B	NST9A	G	NST17B
C		H	
D		I	
E		J	

REMARKS:

U.1356.4

MODEL 1 UNIVAC[R] FILE-COMPUTER CONTROL CHART #2

CUSTOMER:	APPLICATION:	PROGRAMMED BY: DATE	PROGRAM
NAFEC Phase I LAB	OPERATIONAL PLUGBOARD	Oct.30, 1961	

READ URA (R)

NO	IN	OUT
1	OUT 56	IN 57
2	OUT 59	IN 60
3	OUT 69	IN 70
4	OUT 75	UNI 3 IN 3

WRITE URA (W)

NO	IN	OUT
1		
2		
3		
4		

WRITE & CHECK URA (W/C)

NO	IN	OUT
1		
2		
3		
4		

CHANNEL SEARCH EQUAL (ECS)

NO	IN	OUT
1		
2		
3		
4		

CHANNEL SEARCH UNEQUAL (UCS)

NO	IN	OUT
1		
2		
3		
4		

CONDITION COMPARE (C/C)

NO	IN	OUT
1		
2		
3		
4		

CLEAR BLOCK TRANSFER BUFFER (CLBTB)

NO	IN	OUT
1		
2		
3		
4		

CLEAR GEN'L STORAGE BUFFER (CLGSB)

NO	IN	OUT
1		
2		
3		
4		

U 1256.5

BRANCHING (BR)

NO	IN FROM	+	−	O
1	OUT 51	UNI 1 IN 4	UNI3 IN2	UNI 1 IN 3
2	OUT 71	UNI 4 IN 4	UNI 1 IN 2	UNI 1 IN 1
3	OUT 91	UNI 2 IN 4	UNI 2 IN 3	UNI 3 IN 1
4	OUT 60	Bus i 17	Bus h 17	UNI 4 IN 3
5	OUT 67	Bus c 17	Bus b 17	Clear PS h 25
6				
7				
8				
9				
10				
11				
12				

CHANNEL SEARCH PROBE & WAIT (CS P/W)

NO	IN FROM	+	−	O
1				
2				
3				
4				

CHANNEL SEARCH PROBE (CS P)

NO	IN FROM	ACTIVE	+	−	O
1					
2					
3					
4					

CODE DISTRIBUTOR (CD)

ALPHA/NUMERIC IN: V1 SH 74

GROUP 1 IN		GROUP 2 IN		GROUP 3 IN		GROUP 4 IN	
V1 SH 97							
NO	OUT	NO	OUT	NO	OUT	NO	OUT
0	R1	;		,		+	
1	Bus a 35	A		J		/	
2	R3	B		K		S	
3	R4	C	Bus W 57	L		T	
4	R5	D	Bus V 63	M	Bus X 63	U	
5	R6	E	Bus W 58	N	Bus W 63	V	
6	R 7	F		O		W	
7	R8	G		P	Bus V 62	X	Bus X 62
8	R9	H		Q		Y	
9	R10	I		R	Bus W 62	Z	

CDR PULSE IN: OUT 73

NO	OUT	NO	OUT	NO	OUT	NO	OUT
0	Bus S11	3	Bus M11	6	Bus P12	9	Bus N11
1	Bus R11	4	Bus F9	7	Bus L11		
2	Bus Q11	5	Bus G9	8	Bus O12		

CUSTOMER	APPLICATION	PROGRAMMED BY: DATE	PROGRAM NO.
NAFEC Phase I LAB	OPERATIONAL PLUGBOARD	Oct. 30, 1961	

INPUT CONTROL LINES

no	to
a	
b	
c	
d	
e	
f	
g	
h	
i	
j	
k	
l	

INDICATORS

no	from
1	
2	
3	
4	
5	
switch in	
switch out	

BREAKPOINTS

1	CT25
2	CT26
3	CT37

TIMER

on	OUT FUNCTION DELAY A
off	Bus I 17

TIME-OUT PULSES

no	to
A	Bus U63
B	Bus F 13
C	Bus U62
D	

PROGRAM SELECTS

no	in	delay out	drop out	B+
1	ST25	Bus M13	Bus F8	PU T39
2	SCO R			Bus x27
3	SCO W			PU T2
4	SCO U			PU T3
5	SCO V			PU T6
6	NST12D	UNI5 IN4	Bus p27	Bus n27
7	NST30B	UNI5 IN3	Bus g27	Bus 127
8	ST41B	UNI5 IN2		Bus 128
9				
10	Bus E8	NI	Bus 128	Bus V27
11	ST22B	Bus L13	Bus k28	PU T48
12	STEP CLEAR	Bus V13		PU T7
13	Bus W17	IN 79		PU T8
14	Bus E9	Bus 017	Bus T11	PU T32
15	Bus K11	Bus P17	Bus U11	PU T44
16	NS T36 D	Bus G16	Bus K17	Bus E27
	h25-BR5-Ø	g24-IN96	H24-SCO Q	G24-NOT wired
	H24-SCO-S	g24 NOT WIRED	H25-ST43	G25-UNI4-1

SPECIAL CHARACTER OUTS

no	to	no	to	no	to
Q	Clear PS H24	T	Bus H17	W	PU PS 3
R	PU PS 2	U	PU PS 4	X	
S	Clear PS h24	V	PU PS 5	Y	

ALTERNATE SWITCHES

no	select	common	non-select
1	NI	START	IN 82
2	Bus D3	SEL HOLD B+	
3	Bus I11	SEL HOLD B+	
4			
5	Bus v28	CT10A	
6	Bus D1	SEL HOLD B+	

MODEL 1 UNIVAC FILE-COMPUTER SELECTOR CHART

CUSTOMER:	APPLICATION:	PROGRAMMED BY: DATE	PROGRAM NO.
NAFEC Phase I LAB	OPERATIONAL PLUGBOARD	Oct. 30, 1961	

T #	PICK-UP FROM	GROUND	SELECT	COMMON	NON-SELECT
1					
2	B+PS3	Comp.	CT3A	V1 SH 62	CT 13
3a	B+ PS4		R 7	ST 2	CT 6A
b		Comp.	R 1	NST6B	R 2
4					
5					
6a	B+PS5		R 5	NST3A	R 6
b			R 3	ST13	CT 3B
c		Comp.	R 4	NST13	R8
7	B+PS12	Comp.	EA6	V2 SH 78	V1 SH 82
8	B+PS13	Comp.	Bus G13	Bus W16	Bus T17
9a	Bus C1		C-I/O A	Bus d25	C-I/O B
b		Comp.	T/S DS4	Bus c25	T/S DS1
10a	Bus B1		Spec Out DS4	C Alt SW5	Bus x17
b		Comp.	Demand Out DS 4	Bus w28	Not Wired
11a	Bus B 2	Comp.	Test in DS4	UNI 7 Out	Test in DS 1
b			Bus D16	NST16A	Bus R16
12a	Bus 127		Not Wired	V1 SH 69	Bus d35
b			R8	V2 SH 69	R11
c		Comp.	CT30A	R70	ISP
d			CT30B	Bus a28	PU PS 6
13	Bus w27	Comp.	CT6B	NST2	CT6C
14					
15					
16a	Bus X27	Comp.	CT21A	Bus x28	CT11B
b			OE 2 IN	Out 86	IN 87
17a	Bus W27	Comp.	EA1	V1 SH 86	Not Wired
b			Not Wired	Bus f25	C-1/O G
18a			BTB5	V1 63	GSB3
b	Bus v27		BTB1	V2 63	GSB6
c		Comp.	BTB0	R 63	GSB1
d					
19					
20					
21a	Bus C2		Bus B16	ST16A	Bus M16
b		Comp.			
22a	Bus U27	Comp.	Bus L16	Out 95	Bus P16
b			IN PS 11	ST37	Bus n28
23a					
b					
24a			V1 59	V1 69	V1 61
b			CT30C	V1 SH 72	EA 9
c	Bus m27	Comp.	CT30D	V2 SH 72	R6
d			CT31	R SH 72	EA5

U 1356.7

MODEL 1 UNIVAC FILE-COMPUTER SELECTOR CHART

CUSTOMER:	APPLICATION:	PROGRAMMED BY: DATE	PROGRAM NO.
NAFEC Phase I LAB	OPERATIONAL PLUGBOARD	Oct. 30, 1961	

T #	PICK-UP FROM	GROUND	SELECT	COMMON	NON-SELECT
25	Bus C3	Comp.	IN PS1	BKPT 1	STOP
26	Bus B3	Comp.	Bus K 13	BKPT 2	STOP
27					
28					
29					
30A			BTP	ST 12 C	GSP
B			CT 43	ST 12D	PU PS 7
C	Bus g27	Comp.	CT 42 A	ST 24 B	R5
D			CT 42 B	ST 24 C	EA 6
31	Bus h 27	Comp.	CT 42 C	ST 24 D	R 4
32	B+ PS 14	Comp.	FS 2 - Ø	V1 74	CT 44
33A	Bus I 27	Comp.	Vi 86	V1 89	V1 72
B			I/O 3	R 89	I/O - 2
34A	Bus H 27	Comp.	EA 1	V1 SH 89	NOT WIRED
B			L 2	V2 SH 89	NOT WIRED
35A	Bus G 27	Comp.	Bus c 35	R SH 89	NOT WIRED
B			V1 89	V1 90	RB
36A			I/O 5	R 90	I/O 4
B			FS 1 - 6	V1 92	FS2 - 3
C			I/O 7	R 92	I/O 6
D	Bus F 27	Comp.	Bus J 17	OUT 92	IN PS 16
37	Bus A3	Comp.	CT 22 B	BKPT 3	STOP
38					
39A					
B	B+ PS 1	Comp.	SRV	R 87	V1 84
40					
41A			IN 72	UNI 5 OUT	IN 69
B	Bus u27	Comp.	PU PS 8	NS T 43	Bus o27
42A			R 2	ST 30 C	EA 7
B			EA 9	ST 30 D	R 3
C	Bus h 28	Comp.	R SH 66	ST 31	EA 8
D			GSBF	R 72	RA
43	Bus g 28	Comp.	CLEAR PS H25	ST 30 B	CT 41 B
44	B+ PS 15	Comp.	FS 2 - 1	NST 32	FS 2-2
45A					
B					
46A			STEP CLEAR 1	GS Prog. Error	NOT WIRED
B	Bus H 11	Comp.	STEP CLEAR 2	ARITH. ERROR	NOT WIRED
47A			STEP CLEAR 3	PARITY ERROR	NOT WIRED
B	Bus G 11	Comp.			
48A			L 2	V2 SH 86	NOT WIRED
B			Bus b 35	R SH 86	NOT WIRED
C	B+ PS 11	Comp.	Bus H 16	OUT 88	Bus L 17
D					

U 1356.7

PROGRAM CONTROL CHART #4

NAFEC Phase I LAB — BUSSES — OPERATIONAL PLUGBOARD — Oct. 30, 1961

E 51		i 54		u 59	
D 51		i 55		u 60	
C 51		i 56		u 61	
B 51		i 57		u 62	
A 51		i 58		u 63	
K 52		d 54		j 59	
J 52		d 55		j 60	
I 52		d 56		j 61	
H 52		d 57		j 62	
G 52		d 58		j 63	
F 52					
		c 54		i 59	
E 52		c 55		i 60	
D 52		c 56		i 61	
C 52		c 57		i 62	
B 52		c 58		i 63	
A 52					
		X 54		d 59	
K 53		X 55		d 60	
J 53		X 56		d 61	
I 53		X 57		d 62	
H 53		X 58		d 63	
G 53					
F 53		W 54		C 59	
		W 55		C 60	
E 53		W 56	EA 5	C 61	
D 53		W 57	CDR OUT C	C 62	
C 53		W 58	CDR OUT E	C 63	
B 53					
A 53		V 54		X 59	
		V 55		X 60	
v 54		V 56		X 61	EA 11
v 55		V 57		X 62	CDR OUT X
v 56		V 58		X 63	CDR OUT M
v 57					
v 58		U 54		W 59	
		U 55		W 60	
u 54		U 56		W 61	EA 8
u 55		U 57		W 62	CDR OUT R
u 56		U 58		W 63	CDR OUT N
u 57					
u 58		v 59		V 59	
		v 60		V 60	
j 54		v 61		V 61	EA 2
j 55		v 62		V 62	CDR OUT P
j 56		v 63		V 63	CDR OUT D
j 57					
j 58					

PROGRAM CONTROL CHART # 4

BUSSES

NAFEC Phase I LAB — OPERATIONAL PLUGBOARD — Oct. 30, 1961

I 11	SALT SW 3	N 12		S 13	
H 11	PU T46	M 12		R 13	
G 11	PU T47	L 12		Q 13	
F 11		K 12		P 13	
E 11		J 12		O 13	
D 11		I 12		N 13	IN 84
C 11		H 12		M 13	DEL OUT PS 1
B 11		G 12		L 13	DEL OUT PS 11
A 11		F 12		K 13	ST 26
		E 12		J 13	
x 12					
w 12		D 12		I 13	
v 12		C 12		H 13	
u 12		B 12		G 13	ST 8
t 12		A 12		F 13	TIME OUT PULSE B
				E 13	IN 94
s 12		W 13			
r 12		v 13		D 13	
q 12		u 13		C 13	
p 12		t 13		B 13	
o 12				A 13	
		s 13			
n 12		r 13		x 16	
m 12		q 13		w 16	
l 12		p 13		v 16	
k 12		o 13		u 16	
j 12				t 16	
		n 13			
i 12		m 13		s 16	
h 12		l 13		r 16	
g 12		k 13		q 16	
f 12		j 13		p 16	
e 12				o 16	
		i 13			
d 12		h 13		n 16	
c 12		g 13		m 16	
b 12		f 13		l 16	
a 12		e 13		k 16	
				j 16	
X 12	NI	d 13			
W 12	OUT 82	c 13		i 16	
V 12	BUS r27	b 13		h 16	
U 12		a 13		g 16	
T 12				f 16	
		X 13		e 16	
S 12		W 13			
R 12	BUS Q17	V 13	DEL OUT PS 12	d 16	
Q 12	CDR PULSE 8	U 13	IN 78	c 16	
P 12	CDR PULSE 6	T 13	OUT STEP CLEAR 2	b 16	
O 12	BUS O 11			a 16	

PROGRAM CONTROL CHART #4

NAFEC Phase I LAB — BUSSES — OPERATIONAL PLUGBOARD — Oct. 30, 1961

L 1		G 5		D 10	
K 1		F 5		C 10	
J 1		E 5		B 10	
I 1				A 10	
		D 5			
H 1		C 5		x 11	
G 1		B 5		w 11	
F 1		A 5		v 11	
E 1				u 11	
		G 6		t 11	
D 1	SALT SW6	F 6			
C 1	PU T9	E 6		s 11	
B 1	PU T10			r 11	
A 1	BUS A2	D 6		q 11	
		C 6		p 11	
L 2		B 6		o 11	
K 2	NI	A 6			
J 2	OUT 81			n 11	
I 2	OUT 94	G 7		m 11	
		F 7		l 11	
H 2		E 7		k 11	
G 2				j 11	
F 2		D 7			
E 2		C 7		i 11	
		B 7		h 11	
D 2		A 7		g 11	
C 2	PU T21			f 11	
B 2	PU T11	G 8	OE1 OUT 1	e 11	
A 2	Bus A1	F 8	Drop out PS1		
		E 8	PU PS 10	d 11	
H 3				c 11	
G 3		D 8		b 11	
F 3		C 8		a 11	
E 3		B 8			
		A 8		X 11	
D 3	SALT SW2			W 11	NI
C 3	PU T25	G 9	CDR PULSE 5	V 11	OUT 74
B 3	PU T26	F 9	CDR PUSLE 4	U 11	DROP OUT PS15
A 3	PU T37	E9	PS 14 IN	T 11	DROP OUT PS 14
H 4		D 9		S 11	CDR PULSE Ø
G 4		C 9		R 11	CDR PULSE 1
F 4		B 9		Q 11	CDR PULSE 2
E 4		A 9		P 11	
				O 11	BUS 012
D 4		G 10			
C 4		F 10		N 11	CDR PULSE 9
B 4		E 10		M 11	CDR PULSE 3
A 4				L 11	CDR PULSE 7
				K 11	IN PS 15
				J 11	

PROGRAM CONTROL CHART # 4

NAFEC Phase I LAB — BUSSES — OPERATIONAL PLUGBOARD — Oct. 30, 1961

U 59							
U 60							
U 61	Bus V 17						
U 62	TIMER PULSE C						
U 63	TIMER PULSE A						
v 64							
v 65							
v 66							
v 67							
v 68							
u 64							
u 65							
u 66							
u 67							
u 68							
j 64							
j 65							
j 66							
j 67							
j 68							
i 64							
i 65							
i 66							
i 67							
i 68							
d 64							
d 65							
d 66							
d 67							
d 68							
c 64							
c 65							
c 66							
c 67							
c 68							

PROGRAM CONTROL CHART # 4

BUSSES

NAFEC Phase 1 LAB — OPERATIONAL PLUGBOARD Oct. 30, 1961

X 16		i 17	BR 4 +	H 19	
W 16	CT 8	h 17	BR 4 -	G 19	
V 16	OUT 77	g 17	IN 61	F 19	
U 16	OUT 78	f 17		E 19	
T 16		e 17			
				D 19	
S 16		d 17	IN 68	C 19	
R 16	NS T 11 B	c 17	BR 5 +	B 19	
Q 16	IN 85	b 17	BR 5 -	A 19	
P 16	NS T22A	a 17			
O 16				H 20	
		X 17		G 20	
N 16	IN 88	W 17		F 20	
M 16	NS T21A	V 17	BUS U61	E 20	
L 16	S T22A	U 17	PU PS 13		
K 16		T 17	NS T8	D 20	
J 16				C 20	
		S 17		B 20	
I 16	IN 89	R 17	IN 74	A 20	
H 16	ST 48 C	Q 17	BUS R 12		
G 16	DEL OUT PS16	P 17	DEL OUT PS 15	f 24	
F 16		O 17	DEL OUT PS 14	e 24	
E 16				d 24	
		N 17	OUT 85	c 24	
D 16	ST 11 B	M 17	IN 86	b 24	
C 16	IN 95	L 17	NS T 48 C	a 24	
B 16	ST 21 A	K 17	DROP OUT PS 16		
A 16		J 17	ST 36 D	F 24	
				E 24	
x 17	NS TIOA	I 17	TIMER OFF	D 24	
w 17 SPEC	OUT DS 1	H 17	SCO T	C 24	
v 17	DMD OUT DS 1	G 17	Function DEL A in 1	B 24	
u 17		F 17	Function DEL A in 2	A 24	
t 17		E 17			
				f 25	CT 17 B
s 17		D 17		e 25	OE 2 OUT 1
r 17		C 17		d 25	CT 9 A
q 17		B 17		c 25	CT 9 B
p 17		A 17		b 25	OE1 OUT 2
o 17				a 25	
		H 18			
n 17		G 18		F 25	
m 17		F 18		E 25	
l 17		E 18		D 25	
k 17				C 25	
j 17		D 18		B 25	
		C 18	OUT 96	A 25	
		B 18	NI		
		A 18	OUT 97		

PROGRAM CONTROL CHART #4

BUSSES

NAFEC Phase I LAB — OPERATIONAL PLUGBOARD Oct. 30, 1961

x 27	B+ PS2	I 27	PU T33	N 28	
w 27	PU T 13	H 27	PU T34	M 28	
v 27	PU T 18	G 27	PU T35	L 28	
u 27	PU T 41	F 27	PU T36	K 28	
t 27		E 27	B+ PS16	J 28	
s 27		D 27		I 28	
r 27	Bus V12	C 27		H 28	
q 27	Drop out PS 7	B 27		G 28	
p 27	Drop Out PS 6	A 27		F 28	
o 27	NS T41B			E 28	
		x 28	C T16 A		
n 27	B+ PS 6	w 28	C T10 B	D 28	
m 27	PU T24	v 28	SALT SW5	C 28	
l 27	PU T12	w 28		B 28	
k 27		t 28		A 28	
j 27					
		s 28		e 35	R SH 52
i 27	B+ PS7	r 28		d 35	NS T 12 A
h 27	PU T31	q 28		c 35	S T35 A
g 27	PU T30	p 28		b 35	S T48 B
f 27		o 28		a 35	CDR OUT 1
e 27					
		n 28	NS T22B	E 35	
d 27		m 28	OE 2 - OUT 2	D 35	
c 27		l 28	Drop out PS 10	C 35	
b 27		k 28	Drop Out PS 11	B 35	
a 27		j 28	UN17 IN2	A 35	
X 27	PU T16	i 28	B+ PS 8	e 36	
W 27	PU T17	h 28	PU T42	d 36	
V 27	B+ PS 10	g 28	PU T43	c 36	
U 27	PU T22	f 28		b 36	
T 27		e 28		a 36	
S 27		d 28		E 36	
R 27		c 28	OUT 70	D 36	
Q 27		b 28	OUT 72	C 36	
P 27		a 28	C T12D	B 36	
O 27				A 36	
		X 28			
N 27		W 28		K 51	
M 27		V 28		J 51	
L 27		U 28		I 51	
K 27		T 28		H 51	
J 27				G 51	
		S 28		F 51	
		R 28			
		Q 28			
		P 28			
		O 28			

APPENDIX XIX

HIGH-SPEED PRINTER PLUGBOARD WIRING CHARTS

PHASE 1 - UFC 1
MASTER OPERATIONAL PROGRAM

HIGH SPEED PRINTER FORMS - FAA MODIFIED

	MULTILINE REPRINT	
1	—	—
2	—	—
3	—	—
4	—	—
5	—	—
6	—	

MULTILINE COUNTER		
	L	R
1		
2	MCS-C	MCS-NS
3		
4	T/S-IPF	T/S-OUT
5		
6		
H	MCS-IN	MCS-S

	IN	OUT
	—	—

LINE SPACE	
1	LS-S
2	—
3	—
S	LS-1

TRACK SWITCH		
PF	IPF	OUT
—	MC-4L	MC-4R

MULTILINE	
1	MS-V
2	MS-P
3	MS-M
4	MS-K
5	MS-H
6	MS-E

PRINTER CONTROL	
C	PC
C C	T
T	CC
P C	C

ZERO SUPPRESS	
	STORAGE ADDRESS
START 1	1Ø9
END 1	112

MULTILINE SELECTORS			
	A	—	—
	B	—	—
	C		—
	D		
	E	ML-6	
	F		—
	G		
	H	ML-5	
	I	—	—
	J	—	
	K	ML-4	
	L	—	
	M	ML-3	
	N		—
	O		
	P	ML-2	
	R	—	
	S		
	T		
	V	ML-1	

MULTILINE COUNTER SELECTOR	
C	MC-2L
NS	MC-2R
S	MC-HR
IN	MC-HL

FIELD	FIELD	FIELD	FIELD	FROM STORAGE	TO MULTILINE	TO MULTILINE	TO MULTILINE	TO MULTILINE
ORIGINAL STRIP		CONTINUATION ROUTE STRIP						
1ST TRACK	2ND TRACK	1ST TRACK	2ND TRACK		1ST BUFFER	2ND BUFFER		
				1				
				2				
				3				
				4				
1ST AIRWAY		8TH AIRWAY		5	V5			
				6	V6			
				7	V7			
				8	V8			
	COMPUTER FLIGHT NUMBER			9	V9	C6		
				1Ø	V1Ø	C7		
				11	V11	C8		
△		△		12	V12			
1ST JUNCTION		8TH JUNCTION		13	T1			
				14	T2			
				15	T3			
				16	T4			
△		△		17	T5			
2ND AIRWAY		9TH AIRWAY		18	T6			
				19	T7			
				2Ø	T8			
				21	T9			
				22	T1Ø			
				23	T11			
△		△		24	T12			

FIELD	FIELD	FIELD	FIELD	FROM STORAGE	TO MULTILINE	TO MULTILINE	TO MULTILINE	TO MULTILINE
ORIGINAL STRIP		CONTINUATION ROUTE STRIP						
1ST TRACK	2ND TRACK	1ST TRACK	2ND TRACK		1ST BUFFER	2ND BUFFER		
2ND JUNCTION	2ND WORD OF REMARKS	9TH JUNCTION		25	P1	E1		
				26	P2	E2		
				27	P3	E3		
				28	P4	E4		
△		△		29	P5	E5		
3RD AIRWAY		10TH AIRWAY		3Ø	P6	E6		
				31	P7	E7		
				32	P8	E8		
				33	P9	E9		
				34	P1Ø	E1Ø		
				35	P11	E11		
△		△		36	P12	E12		
3RD JUNCTION		1ØTH JUNCTION		37	01			
				38	02			
				39	03			
				40	04			
△		△		41	05			
4TH AIRWAY		11TH AIRWAY		42	06			
				43	07			
				44	08			
				45	09			
				46	01Ø			
				47	011			
△		△		48	012			

HIGH SPEED PRINTER FORMS - FAA MODIFIED

FIELD	FIELD	FIELD	FIELD	FROM STORAGE	TO MULTILINE	TO MULTILINE	TO MULTILINE	TO MULTILINE
ORIGINAL STRIP		CONTINUATION ROUTE STRIP						
1ST TRACK	2ND TRACK	1ST TRACK	2ND TRACK		1ST BUFFER	2ND BUFFER		
	4TH JUNCTION		11TH JUNCTION	49		K1		
				5Ø		K2		
L/C		L/C		51	M5	K3		
				52		K4		
	Δ		Δ	53		K5		
AIRCRAFT IDENTIFICATION	5TH AIRWAY	AIRCRAFT IDENTIFICATION	12TH AIRWAY	54	M6	K6		
				55	M7	K7		
				56	M8	K8		
				57	M9	K9		
				58	M1Ø	K1Ø		
				59	M11	K11		
	Δ		Δ	6Ø	M12	K12		
	5TH JUNCTION		12TH JUNCTION	61		J1		
				62		J2		
				63		J3		
				64		J4		
HOURS OF TIME	Δ		Δ	65	L5	J5		
	6TH AIRWAY		13TH AIRWAY	66	L6	J6		
				67		J7		
U/C		U/C		68	L7	J8		
				69		J9		
MINUTES OF TIME				7Ø	R1Ø	J1Ø		
				71	R11	J11		
	Δ		Δ	72		J12		

FIELD	FIELD	FIELD	FIELD	FROM STORAGE	TO MULTILINE	TO MULTILINE	TO MULTILINE	TO MULTILINE
ORIGINAL STRIP		CONTINUATION ROUTE STRIP						
1ST TRACK	2ND TRACK	1ST TRACK	2ND TRACK		1ST BUFFER	2ND BUFFER		
				73		H1		
PREVIOUS FIX TIME	6TH JUNCTION		13TH JUNCTION	74	N2	H2		
				75	N3	H3		
				76	N4	H4		
	◁		◁	77	N5	H5		
				78		H6		
				79		H7		
	7TH AIRWAY			8Ø		H8		
DEPARTURE POINT			14TH AIRWAY	81	V1	H9		
				82	V2	H1Ø		
				83	V3	H11		
	◁	7TH JUNCTION	◁	84	V4	H12		
TYPE OF AIRCRAFT	CTTY			85	L1	G1		
			14TH JUNCTION	86	L2	G2		
				87	L3	G3		
				88	L4	G4		
Distance and Direction Rho-Theta or Latitude	◁		◁	89	N6	G5		
	DESTINATION			9Ø	N7	G6		
				91	N8	G7		
				92	N9	G8		
THIS FIX OR LONGITUDE			15TH AIRWAY	93	M1	G9		
	•			94	M2	G1Ø		
	•			95	M3	G11		
	◁		◁	96	M4	G12		

HIGH SPEED PRINTER FORMS - FAA MODIFIED

FIELD	FIELD	FIELD	FIELD	FROM STORAGE	TO MULTILINE	TO MULTILINE	TO MULTILINE	TO MULTILINE
ORIGINAL STRIP		CONTINUATION ROUTE STRIP						
1ST TRACK	2ND TRACK	1ST TRACK	2ND TRACK		1ST BUFFER	2ND BUFFER		
			DESTINATION	97		D1		
				98		D2		
				99		D3		
				1ØØ		D4		
Δ			•	1Ø1	S5	D5		
Δ	PREVIOUS FIX, DISTANCE & DIRECTION RHO-THETA OR LATITUDE		•	1Ø2	S6	D6		
PROP. DPTR. TIME			•	1Ø3	S7	D7		
			•	1Ø4	S8	D8		
PROP. FIX TIME	1ST WORD OF REMARKS		Δ	1Ø5	S9	D9		
			Δ	1Ø6	S10	D1Ø		
P			Δ	1Ø7	S11	D11		
Δ	PREVIOUS FIX OR PREVIOUS FIX LONGITUDE		Δ	1Ø8	S12	D12		
ALTITUDE				1Ø9	S1	C1		
	SPEED			11Ø	S2	C2		
				111	S3	C3		
				112	S4	C4		
	L/C or 1		L/C or 1	113		F4		
				114				
	X or A		X or A	115		F1		
L/C		L/C		116	R2			
	1 or L/C		1 or L/C	117		F2		
COLOR CODE	L/C or 1	COLOR CODE	L/C or 1	118	R3	F3		
				119				
				12Ø				

FROM MULTILINE	FROM MULTILINE	FROM MULTILINE	FROM MULTILINE	FROM MULTILINE	FROM MULTILINE	PRINT COLUMN	
		M6				1	
		AIRCRAFT IDENTIFICATION M7			C6	2	
		M8			COMPUTER FLIGHT NUMBER C7	3	
		M9			C8	4	
		M1Ø				5	
		M11				6	
		M12				7	
						8	INACTIVE PRINT COLUMN
S5		L1			C1	9	
S6		TYPE OF AIRCRAFT L2			C2	1Ø	
PREVIOUS FIX S7		L3			SPEED C3	11	
S8		L4			C4	12	
S9	N2					13	
S1Ø	N3					14	
PREVIOUS FIX TIME S11	PREVIOUS FIX TIME N4					15	
S12	N5					16	INACTIVE PRINT COLUMN
		M5				17	
		U/C HOURS OF TIME L5				18	
		L6				19	
R1Ø		U/C L7				2Ø	
MINUTES OF TIME R11						21	
						22	
						23	
						24	
LINE 1	LINE 2	LINE 3	LINE 4	LINE 5	LINE 6	PRINTER LINE	
LINE 1	LINE 2	LINE 3			LINE 5	STRIP LINE	

FROM MULTILINE	FROM MULTILINE	FROM MULTILINE	FROM MULTILINE	FROM MULTILINE	FROM MULTILINE	PRINT COLUMN	
	N6	M1				25	
	N7	M2				26	
	N8	M3				27	
	N9	M4				28	
						29	INACTIVE PRINT COLUMN
S1						3Ø	
S2						31	
S3						32	
S4						33	
						34	
						35	
						36	INACTIVE PRINT COLUMN
V1	P1		K1	H1	D1	37	
V2	P2		K2	H2	D2	38	
V3	P3		K3	H3	D3	39	
V4	P4		K4	H4	D4	4Ø	
◁ V5	◁ P5		◁ K5	◁ H5	D5	41	
V6	P6		K6	H6	D6	42	
V7	P7		K7	H7	D7	43	
V8	P8		K8	H8	D8	44	
V9	P9		K9	H9	D9	45	
V1Ø	P1Ø		K1Ø	H1Ø	D1Ø	46	
V11	P11		K11	H11	D11	47	
◁ V12	◁ P12		◁ K12	◁ H12	D12	48	
LINE 1	LINE 2	LINE 3	LINE 4	LINE 5	LINE 6	PRINTER LINE	
LINE 1	LINE 2	LINE 3	LINE 3	LINE 4	LINE 5	STRIP LINE	

ALTITUDE

DISTANCE & DIRECTION

FIX

DEPARTURE POINT

JUNCTION

JUNCTION

JUNCTION

AIRWAY

AIRWAY

AIRWAY

AIRWAY

1ST WORD OF REMARKS

FROM MULTILINE	FROM MULTILINE	FROM MULTILINE	FROM MULTILINE	FROM MULTILINE	FROM MULTILINE	PRINT COLUMN
T1	01		J1	Y G1	E1	49
JUNCTION T2	JUNCTION 02		JUNCTION J2	T G2	E2	5Ø
T3	03		J3	T G3	E3	51
T4	04		J4	C G4	E4	52
◁ T5	◁ 05		◁ J5	◁ G5	E5	53
T6	06		J6	G6	E6	54
T7	07		J7	DESTINATION G7	2ND WORD OF REMARKS E7	55
T8	08		J8	G8	E8	56
AIRWAY T9	AIRWAY 09		AIRWAY J9	G9	E9	57
T1Ø	01Ø		J1Ø	G1Ø	E1Ø	58
T11	011		J11	G11	E11	59
◁ T12	◁ 012		◁ J12	◁ G12	E12	6Ø
						61
						62
						63
						64
				L/C or 1 F4		65
L/C R2				1 or L/C F2		66
COLOR CODE R3				L/C or 1 F3		67
				X or ◄ F1		68
						69
LINE 1	LINE 2	LINE 3	LINE 4	LINE 5	LINE 6	PRINTER LINE
LINE 1	LINE 2		LINE 3	LINE 4	LINE 5	STRIP LINE

INACTIVE PRINT COLUMN

APPENDIX XX

INPUT TRANSLATE AND FORMAT CONTROL UNIT PLUGBOARD NARRATIVE AND WIRING CHARTS

TABLE OF CONTENTS

		Page
INPUT MESSAGE NARRATION		5
General		5
I.	Teletype Substation Address	5
II.	Synchro Tape Substation Address	6
III.	Synchro Tape - Teletype	7
IV.	Synchro Tape - Teletype	9
V.	PD Stepping	10
VI.	Beginning of Message Check	10
VII.	Setting Word Address Counter and Character Address Counter (WAK and CAK)	11
VIII.	Route	11
IX.	Remarks	12
X.	Message Void	13
XI.	Out of Place Line Feed and Bell Symbol Errors (Transmitted Errors)	14
XII.	Character Parity Check	15
XIII.	Invalid Characters Check	15
XIV.	Field Length Check	15
XV.	Time Out Error	16
XVI.	Channel Parity Check	17

TABLE OF CONTENTS (Continued)

Page

XVII. Overflow Check 19

XVIII. End of Message 19

INDEX OF TABLES

Table	Title	Page
I	Input From HSPT	21
II	Error Indications and Diagnosis	22-23

LIST OF ILLUSTRATIONS

Diagram	Title	Page
I	Teletype Substation Addresses	24
II	Synchro Tape Substation Address	25
III	Synchro Tape - Teletype	26
IV	Synchro Tape - Teletype	27
V	PD Stepping	28
VI	Beginning of Message Check	29
VII	Setting Word on Character Address Counters	30
VIII	Route	31
IX	Remarks	32
X	Message Void	33
XI	Out of Place Line Feed and Bell Symbol (Errors Transmitted)	34
XII	Character Parity Check	35
XIII	Invalid Character Check	35
XIV	Field Length Check	35

LIST OF ILLUSTRATIONS (Continued)

Diagram	Title	Page
XV	Time Out	36
XVI	Channel Parity Check	37
XVII	Overflow Check	38
XVIII	End of Message	39-54
XIX	Plugboard Diagram	55-62

INPUT MESSAGE NARRATION

General:

The Input Message T & F plugboard, which is explained by the following diagrams and narration, represents the best combination of hardware elements to date. In referencing this material, it is advisable that the reader have access to the particular diagram while he is reading the narration.

I. Teletype Substation Address:

In both the Synchro Tape and the Teletype Input Substation the first character, after the last disconnect, to appear at the T & F plugboard is the substation address. The substation address is a binary number which is determined by the setting of the substation number selector switch on the operators panel of the input substation. The T & F plugboard has been designed to operate in a Synchro Tape mode with receipt of substation addresses ten through fifteen. Receipt of addresses one through nine causes the T & F to operate in a teletype mode. Using a substation address above ten for a Teletype message will result in errors as will utilization of substation address nine or below for a Synchro Tape message. For this reason, the substation selector switch should be marked to indicate the proper range for Teletype and Synchro Tape. At PD 1, i.e., PD 1 following a Master Clear or an Input Disconnect, PD is programmed to step on decode. Receipt of the substation address in the Incoming Buffer Output Register causes a Decoder Group I hub, corresponding to the binary value of the substation address, to emit and PD to be advanced to 2. Upon stepping to PD 2 with the decoding of the substation address, Decoder Input hub 64 is activated causing the substation address to now make an appearance at a corresponding Decoder Group III hub. PD 2 is also programmed to pick up Low Speed Selector 10 (LSS 10) so that PD 1 will be stepped on encode for the duration of the message. During the output cycle of the teletype substation character cycle the substation address from Decoder Group III is transferred to Word 0 Character 11 of the 120 character buffer. During the function cycle of the substation address character cycle Function Detector b (FD b), which has been enabled by PD 2, is activated. FD b1 through Bus W-25 clears the buffer to spaces. This action erases the substation address that was encoded from Decoder Group III. At FD b2 time, Bus X-21 is enabled causing

a space to be encoded (this action causes the Word Address Counter and Character Address Counter - WAK and CAK - to be set to 0-10) and the timer circuitry to be energized. The decoder which was turned off at the beginning of the function cycle is turned on by a signal from FD b3. Since the substation address is still in the Incoming Buffer Output register, the Decoder Group III hub representing this substation address is activated causing the substation address to be stored in Word 0 Character 10 of the buffer. At FD b4 time the end of message selector (HSS 3) is picked up.

If the substation selector switch has been set to any number from one through nine (indicating a Teletype address), that particular substation address will be encoded into Word 0 Character 10. If the substation address happened to be a number from ten to fifteen(indicating a Synchro Tape substation) an alpha character within the range A-F corresponding to a number in the range of 10-15, is encoded in Word 0 Character 10. In the latter instance the correct substation address (A-F) is decoded from a DEC Group IV Hub. Word 0 Character 10 will not normally be used in message processing. It is, however, an additional identification that may be used in event the addressor field of a message is garbled.

II. Synchro Tape Substation Address:

As stated in I above, if the substation address selector switch is set to any number from ten to fifteen the T & F is conditioned for the Synchro Tape operating mode. After the substation address is received in the Incoming Buffer Output register PD is advanced to 2, causing the substation address to make an appearance at a Decoder Group III hub. If the Address falls within the address range of 10-15, bus b-25 is activated causing High Speed Selector 5 (HSS 5), LSS 6 and LSS 7 to be picked up. Picking up these selectors places the T & F in the Synchro Tape operating mode. Picking up HSS 5 activates Decoder Input Hub 32. With Decoder Input Hubs 64 and 32 enabled the substation address appears at a Decoder Group IV Hub. During the Output cycle of the Substation Address Character cycle the appropriate Synchro Tape substation address A-F is encoded in Word 0 Character 11 of the buffer. Function Detector b which is activated by PD 2 performs the functions described in paragraph 2 Section I - Teletype Substation Address. At FD b1 time the buffer is cleared to spaces and at

FD b2 time a space is encoded and the timer is energized. At FD b3 time the Synchro Tape Substation Address is encoded from Decoder Group IV since Decoder Input Hubs 64 and 32 are still enabled. At FD b4 time the end of message selector (HSS 3) is picked up.

In Diagram II of the "Synchro Tape" diagrams, Bus b-25 picks up HSS 5; HSS 5 in the select position connects the sixth incoming buffer output information level (32 and 0-32) to the sixth information level of the Decoder Input (32 and 0-32) through busses a-20 and X-27. Had this been a Teletype message, HSS 5 would not have been picked up and incoming precedence output would be connected to the Decoder Input hubs, C-32 to create a sixth level for Teletype. Incoming precedence, upper or lower case, is set by the appearance of figures or letters in the input message. Precedence, once set to a given state remains in the given state until changed by the detection of opposite precedence. In Teletype, letters and figures are used to create a sixth information level whereas in Synchro Tape it is provided continuously with each character appearing in the Incoming Buffer Output register. At the end of message precedence is set to lower case by a signal from Bus F-30.

III. Synchro Tape - Teletype:

In Diagram III of the "Synchro Tape diagrams, the effects derived from picking up LSS 6 are shown. Element a of LSS 6 controls the toggling of the Channel Parity Register. If LSS 6 is in the dropped out condition (Teletype mode) a Channel Parity Register-In enable through Bus w-20, LSS 4d NS, LSS 6a NS, and HSS 2d NS, will step the Channel Parity Register with the receipt of each character in the Incoming Buffer Output Register. It is necessary to route the CPR-IN enable through HSS 4 (Channel Parity Selector) to inhibit stepping the Channel Parity Register upon receipt of the Channel Parity Character. In the Synchro Tape mode, the stepping of the Channel Parity Register is inhibited by picking up LSS 6. The CPR-IN enable is also routed through HSS 2d (mode selector) to prevent an erroneous toggling of the channel parity register when remarks are present in an input ICM.

Element b of LSS 6 qualifies the Line Feed symbol. In the Teletype mode, it should appear in the beginning of message,

immediately after the channel check character in the channel check group (carriage return, letters, channel check character, Line Feed, letters) and possibly as the channel check character. If this character (Line Feed) occurs at any other place in the inter-center message, it will be detected as an out of place Line Feed. If a character parity error is detected by the Output T & F or Output Reader at the center transmitting a message, Line Feed and E characters are inserted to inform the receiving T & F Unit that an error was transmitted to it. The Line Feed must, therefore, be detected as a flag at the receiving input T & F. As the diagram shows a signal from Unibus 5 Out, through Bus d-23, activates the Channel Parity Register and provides an input to Inverter 5. The inputs to Unibus 5 and Unibus L occur at the times a Line Feed character is expected, i. e., the beginning of the message, the channel check character (which may be a Line Feed) and the character immediately after the channel check character. If there is no signal at any of the Unibus L in Hubs a Line Feed is not expected. A no-signal condition at the Input to the Inverter causes a signal to be emitted from the Out hub. The decoding of a Line Feed character provides a signal at DEC II-2 or DEC I-2 which is routed through Bus v-30 to enable And Gate 6. An Output from And Gate 6 denotes an out of place Line Feed. The enable is routed to the common of LSS 6b to qualify the out of place Line Feed. If the input is from Synchro Tape selector 6 is picked up and the out of place Line Feed signal from the out of And Gate 6 is terminated. In the teletype mode, the out of place Line Feed is routed through LSS 6b NS and Unibus F to Bus d-24 to activate HSCL X and encode a colon. The colon will type out as a northeast wind arrow (↗) on the supervisory typewriter. This arrow, in teletype operation, indicates that a Line Feed has been inserted by the preceding Univac T & F output and as such is a transmitted error.

Element c of LSS 6 qualifies an output from DEC II-5 which is the bell symbol. In the Synchro Tape mode a signal at DEC II-5 is routed through the select side of element c to an invalid character chain. Thus, in the Synchro Tape mode, the bell character is an invalid character. In teletype, the bell symbol is a legitimate character inserted by an output T & F to indicate the presence of a parity incorrect character. In this instance the bell character is routed through the non-select side of LSS 6c to Unibus F to activate HSCL X and encode a colon.

Element d of LSS 6 qualifies PD 3. In the teletype mode the program distributor steps on decode from PD 3 through PD 6 to accommodate the appearance of the beginning of message sequence (letters, letters, line feed, letters). In Synchro Tape, however, the beginning of message sequence has only two characters which are line feed and letters. To adjust the program distributor when operating in the Synchro Tape mode, PD 3 is routed through the select side of Element d to FD e. FD e2, through Bus w-30 and Unibus 2, sets the PD CHAR IN to 5. Enabling PD CHAR and/or WORD IN hubs to given value will cause a signal to be emitted from the PD hub on the plugboard that has a value of one (1) greater than the value of the SET PD IN hubs enabled. In this instance, enabling PD CHAR IN Hubs 4 and 1 sets PD to 6. The net effect is that in Synchro Tape operations the letters character of the beginning of message of group steps PD to 7 with the decode cycle and the first character of the addressor steps PD to 8 with the encode cycle.

IV. Synchro Tape-Teletype:

LSS 7 is shown in Diagram IV of the "Synchro Tape-Teletype" Diagrams. Note that LSS 7 is also picked up by a signal at Bus b-25 which is activated by a Synchro Tape substation address. Element c is used to qualify the message void character. In Synchro Tape mode, a signal from DEC II-12 (message void) goes through the select side of LSS 7c to Bus N-24. This is a valid character and its effects are diagrammed in Diagram X "Message Void". In a teletype mode, the message void is an invalid character and is treated as an invalid character by routing the signal through the non-select side of LSS 7c to Unibus 16, HSS 4b NS, and Unibus 13 to Function Detector d which activates HSCL X and encodes the ¢ character which will be printed as a north wind arrow (↓) on the Supervisory Typewriter. In addition the stepping of PD with the encoding of the ¢ character is inhibited.

Element d of LSS 7 qualifies the presence of the north wind arrow (↓) which appears at DEC II-20. In the Synchro Tape mode, the north wind arrow is an invalid character and is treated as such by routing a signal from DEC II-20 to an invalid character chain through DEC I-0. In the teletype mode, an output from DEC II-20 is deleted by not enabling any of the encoding hubs. In teletype operations the north wind arrow is a valid character because the Output T & F, at the center transmitting the message, will insert a north wind arrow if a synchronization error has been detected.

V. PD Stepping:

The program distributor in most instances is programmed to step on encode. However, there are several instances when it is desirable to step on decode. These PD positions, where stepping is to be performed on decode, are shown as Inputs to Unibus 17, 11 and 12. At these positions Bus e-28 is enabled causing PD to be stepped on decode. At all other PD positions, Bus e-28 is not enabled, hence the Output from Inverter 1 (INV 1) enables PD Step In 3 which steps PD with each character encoded. PD 2, 4, 5, and 6 always step on decode to test for the presence of the beginning of message (letters, letters, Line Feed, letters) in teletype operations. At PD 1, when the substation address appears at a Decoder Group I hub, PD is stepped on Decode. After the substation address is decoded LSS 10 is picked up and PD 1 is programmed to step on encode for the duration of the message. PD 3 in the Synchro Tape mode steps on encode to enable the advancing of PD to 6 to adjust the program distributor for two less beginning of message characters. PD 14, 23 and 29 disable the step on encode mode and enable the step on decode mode to allow the T & F to jump the Word Address Counter (WAK) and Character Address Counter (CAK) with PD Outs. This is necessary because WAK and CAK cannot be jumped with PD outs when PD is stepping on encode. LSS 8, the route selector, qualifies PD 35 and 42 so that when LSS 8 is non-select these PD counts can be used to set WAK and CAK. At PD 48 all of the identification data has been transferred to the buffer in the T & F (see Table I "Input from HSPT") and LSS 8 is picked up. PD is then set to 31 (see Diagram VIII "Route") and PD is advanced through the range of 31-130 depending on length of route. When LSS 8 is in the select position, PD 42 and 35 are disconnected from Bus e-28 so that PD is stepped on encode at these positions. At the end of the route portion, if there are remarks, PD is set to 91 (see Diagram IX "Remarks") and PD is stepped on encode for the remainder of the message.

VI. Beginning of Message Check:

The Beginning of Message Check diagram shows the wiring of DEC I-31 (representing letters) and DEC I-2 (representing Line Feed) to Unibus 10. The Out of Unibus 10 is wired to INV 2 and the Out of INV 2 is wired to And Gate 1. PD 3, 4, 5 and 6 serve

as inputs to Unibus 20 providing the other input to And Gate 1. If, while in the teletype operating mode, any character other than Line Feed or letters are decoded during PD 3 through 6, an error called "No Beginning of Message" results, i.e., if any other decoder hub is activated, the absence of a signal at the Input to INV 2 causes a signal to be emitted from the INV 2 Out hub that enables And Gate 1. A no beginning of message error will activate FD d which will encode a ¢ character, inhibit step on encode and activate HSCL X. The ¢ character prints as a north wind arrow on the Supervisory typewriter.

VII. Setting Word Address Counter and Character Address Counter (WAK and CAK):

Table I "Input From HSPT" shows an Input message arranged in the format that is transferred from the buffer to I/0 tracks 01 and subsequently to track 97 and 96. To arrange the identification portion of the data in the format shown PD 6, 14, 23, 29, 35 and 42 are stepped on decode so that the Word and Character Address counters can be set to the buffer address that is to receive the first character of the next field to be processed.

PD 6, which marks the decoding of the last beginning of message character (letters) in Synchro Tape operations and the decoding of the first character of the addressor in Teletype operations sets the Buffer Word and Character Address Counters to 0-6 for the receipt of the first character of the addressor field.

In a similar manner, PD 23, which denotes the end of the Aircraft Identification field, sets WAK to 2 and CAK to 3 for the receipt of the first character of the Type of Aircraft field. After the last field of the Identification portion of the message has been transferred to the buffer, PD 48 initiates a track switch function that transfers the buffer content to the I/0 track and track switches. The buffer is then cleared to spaces. Clearing the buffer to spaces sets WAK and CAK to 0-11 in preparation for the receipt of the Route portion of the Input Message. If the Input Message contains Remarks, WAK and CAK are set to 7-11.

VIII. Route:

At PD 47 a check is made for the space at the end of the Altitude field. A space at this position will indicate that the Identification

portion of the message is now contained in the T & F Buffer (see Table I). PD 48 is routed through the non-select side of LSS 8c to the In of FD a. FD a1 enables input stop and track switch through Bus h-20. The track switch function transfers the Identification portion of the message from the buffer to I/0 track left and track switches. A signal from FD a2 sets PD to 31. (PD Character 6 and PD Word 2 is the indication for PD 31) by enabling Bus h-13, h-14 and Unibus 2. The signal from FD a3 is routed through the non-select side of HSS 1a to enable Bus W-25 which clears the buffer to spaces in preparation for the Route portion of the message. FD a4 picks up low speed selectors 8 and 9, the route selectors. In summary, PD is set to 31 and after the track switch WAK and CAK are set to Word 0 Character 11. As the route is read, a check for the proper field length is made by checking for spaces at the PD counts shown in Table I, "Input From HSPT", and Diagram XIV, "Field Length Check".

IX. Remarks:

At the end of any of the route fields a remarks code (upper case C) may be detected. The upper case C emits from DEC II-14. A signal from DEC II-14 is routed through Unibus 6 to activate FD a. The remarks signal also enables Bus b-19 which activates HSCL Y. Bus b-19 also picks up HSS 1, the Remarks selector.

A signal from FD a1 enables Bus h-20 which subsequently enables the track switch function causing the Route information to be put on track right. The signal from FD a2 enables Bus h-13 and 14 which sets PD to 31 and through the select side of HSS 1b enables Bus u-2 which sets PD Word 1 and 4, making a total PD count of 91. The signal from PD 91 is routed through the select side of HSS 1 to FD h IN.

The enable at Bus u-2 from FD a2 also goes to Unibus 14 enabling Output 1. Enabling this hub transfers the identification data from track left to the buffer. In addition, Bus u-2 picks up HSS 2. Output 1 is enabled before HSS 2 is picked up because HSS 2 requires another clock pulse before it is picked up. When HSS 2 is picked up Output 1, 2, and 3 are connected to power putting the T & F in the Output mode. Thus, when HSS 2 is picked up, the T & F is switched from an Input mode to an Output mode of operation. A signal from FD a3

is routed through the select side of HSS 1 and Unibus G to Function Input 1, to perform an Output stop function. This will inhibit the transfer of characters to the Input Scanner while in the Output mode. After the Buffer is filled with the Identification portion of the message, a space code occupying buffer position 120 (Word 0 Character 11) is transferred to the Incoming Buffer Output register. Since the Output stop has been enabled, the character is not encoded, i. e., transferred to Output. Receipt of this character at the Incoming Buffer Output Register causes a signal to be emitted from the CPR-IN hub. This signal is routed to Bus w-20 causing HSS 2 to be dropped out, and the T & F to be placed in the Input mode of operation again. During the function sequence portion of the space character cycle, FD h Out hubs will emit signals since FD h is enabled during this character cycle by PD 91. The signal from FD h2 is routed to Bus F-6 which sets the buffer address to Word 7 Character 11 and the signal from FD h3 is routed through Unibus H to Output start so that the next character to be received from an Input Substation (the first character of Remarks) can be transferred to Word 7 Character 11 in the buffer.

As a result of the above action, the route information is transferred to track right and the T & F is switched to the Output mode, enabling the information from track left (which contains the Identification) to be re-loaded into the buffer. T & F operation is then switched to the Input mode, enabling the remainder of the buffer (starting at Word 7 Character 11) to be filled with the Remarks. Switching from the Input to the Output mode is necessary to return the information on track left to the buffer because buffer transfers to and from the I/O track are 120 characters at a time.

X. Message Void:

There are presently two methods of nullifying an Input error made by a Synchro Tape operator. The first method, which may be utilized when an error is discovered immediately after it is made, requires the depression of the back-space key followed by a depression of the delete key. This action will cause a delete character to be overpunched in the frame where the error occurred. The operator may then re-enter the correct data. The delete character is ignored by the T & F. If the Synchro TApe operator wishes to nullify an entire message, the message void key is depressed followed by a depression of the tape skip key. Depressing the tape skip key causes the program tape to be advanced so that

the end of message codes are punched in the message tape. The Synchro Tape operator may then re-enter the complete message.

The message void character when received by the T & F causes a signal to be emitted from Decoder II hub 12. This signal when received at the common of LSS 7c is routed to bus N-24 and N-25 when the Input is from Synchro Tape. In Teletype operations a signal at DEC II-12 is routed to Unibus 16 for treatment as an Invalid Character. Bus N-24 and N-25 activates HSCL X, encodes a prime (prime is printed as a northwest wind arrow on the T/W), and sets Two Character Function Detector b (2FD b) by routing a signal to 2FD b hub 1. If the next character to be received is the figures character, HSCL W is activated. Note that if the tape skip key was depressed immediately after the depression of the message void key the next character received must be figures. The computer program must be programmed so that the voided message will be ignored upon detecting the presence of HSCL W and X. In the event that a message void character is not immediately followed by figures, the computer program, upon detecting the presence of HSCL X, will cause the message to be typed out on the supervisory typewriter. The presence of the northwest wind arrow on the typeout will indicate the detection of a non-legitimate message void, i. e., a message void not followed by figures.

XI. Out of Place Line Feed and Bell Symbol Errors (Transmitted Errors):

Output T & F systems are presently programmed to send three characters, Line Feed, E, and bell characters, to indicate the presence of an error in a message transmitted from the originating station. The Line Feed character is a valid character in a teletype message when it appears in the Beginning of a Message group of characters, immediately after a channel check character, and as the channel parity character. If the Line Feed character is detected, a signal is emitted from the DEC II-2, which enables one In of And Gate 6. The out of Unibus L, which is wired to the In of Invertor 5, represents those positions in the message where a Line Feed is expected. The power input to Bus b-14 through HSS 3b Non-Select and HSS 4a Select represents the channel check character position and the power input to Unibus 5 through HSS 3b Select and HSS 4a Select represents the position following the Channel Check Character. If an out of place Line Feed is received the Out of INV 5 will

enable And Gate 6. This out of place Line Feed signal is routed to the common of LSS 6b. In teletype this selector would not be picked up so the signal would be routed through Bus d-24 to encode a colon and activates HSCL X.

The bell character signal, which appears at DEC II-5, is routed directly to LSS 6c where it is qualified by the Synchro Tape/Teletype Mode selector. In Synchro Tape Operations the Bell Character is invalid while in teletype operations receipt of the bell character denotes the presence of a parity incorrect character.

XII. Character Parity Check:

If the contents of the Incoming Buffer Output Register has an even parity count, a signal is emitted from the "Character Parity Odd" hub. This signal, through Unibus 13, is routed to the In of FD d which encodes a ¢ character, inhibits the stepping of PD with the encoding of the ¢ character, and activates HSCL X.

XIII. Invalid Characters Check:

Invalid characters which are wired together to form chains are shown as inputs to Unibus 16 by the wiring from DEC II-18, 25, 15, etc. Unibus 16 Out through Unibus 13 Out enables Function Detector d to activate HSCL X and encode a ¢ character.

XIV. Field Length Check:

The T & F checks for proper field length by checking for spaces at certain PD counts as shown in Table I, "Input From HSPT". The small numbers above the spaces in each field indicate the PD counts where the test for space is made. The test for space is made at the end of each field in the identification portions of the message. At PD 48 the space at the end of the Altitude field marks the end of the Flight Plan Identification. This PD is used to track switch, set PD to 31, clear the buffer to spaces, and set WAK and CAK to 0-11. PD is then stepped through a maximum of nine fields to PD 130. At the end of the Route, if there are any Remarks, PD is then reset to 91. The check for space of field length is not performed for the remainder of the message.

PD Inputs for the field length check are routed into Unibus 9 and Unibus 8 to enable one of the In hubs of And Gate 3. Because of the resetting of PD in the case of route, LSS 8 (the route selector) is used to qualify PD 35 and PD 48. Note that a space occurs at PD 42 in both the identification portion and the route portion of the message. PD 97, 108, 119, 130, 53, 86, 75 and 64 are qualified by HSS 1c of the Remarks selector. This qualification is necessary because the check for space is not made in the remarks portion of the message. The other input to And Gate 3 contains a number of decoder outputs through Unibus D and Unibus 3. Normally the space decoder hub (DEC 1-4) will be emitting to provide the check for space at the end of field length. However, certain other characters such as Line Feed, letters, figures, carriage return, the channel parity character, and message void may be in this position during the route portion of the message. This condition may occur because PD is stepped on encode during the entire route portion of the message and since a channel check group or message void (all of which are not encoded) may appear at the end of any field in the route portion, PD will not be stepped upon the detection of these characters. Hence, PD will still be at the PD count where the space appeared. Thus, the absence of any of the characters shown as inputs to Unibus 3 will cause a signal to be present at hub 2 of And Gate 3. The presence of carriage return, figures, etc., does not affect the validity of the field length test. An output from And Gate 3 will mark the presence of an improper field length by encoding a ¢ character and activating HSCL X.

XV. Time Out Error:

The timer installed in the FAA High Speed Paper Tape System is used to permit continued operation in the event one communication line fails. Normally about five seconds will be allowed for each message to perform its cycle. If the operation cycle of a message exceeds the limitation placed upon it by the timer setting, the T & F Unit will stop processing this message, lock out the substation involved, and continue the processing of messages from other substations.

Hub 2 of FD b is wired to the Timer Start hub. This means that during every message the timer, which has a retriggerable delay, is restarted. If the timer is set for five seconds, approximately 300 character times can elapse before the "1" hub of the timer will emit. If five seconds elapse before the end of

message has been detected, a signal from the "1" hub of the timer through the non-select side of Alternate Switch F will enable FD f In. The signal from FD f1 enables the Lock Out hub to lock out this substation. Before another bid can be sent from substation, manual intervention to locate the cause of this timeout will have to be performed. The signal from FD f2 will encode a comma by enabling Encoder I Hub 17. The signal from FD f3 enables HSCL Y and FD f4 enables the end of message busses which ends the timer cycle and clears the timeout flip-flop to the zero state. The end of message busses drop out all active selectors and initializes the T & F for the next message.

XVI. Channel Parity Check:

As each character arrives at the Input Punch in the input substation, character parity is generated for inclusion as part of each character. Throughout the input units, the computer, and the output units, each character is checked for proper parity. As all five levels are necessary for information in teletype communications, the parity check used incorporates a longitudinal or channel parity check. A channel parity character used in this check is a character or frame that is derived from the number of bits transmitted in each of the five levels. If the total number of bits in a particular level is even, and if odd channel parity is desired, a bit is inserted in that level of the channel check character to make the total an odd number.

A channel parity count in the receiving T & F starts with the first character of the addressor which immediately follows the synchronization codes (letters, letters, Line Feed, letters). A binary count of the bits in each channel is made up to the channel check character of the channel check group (carriage return, letters, channel check character, Lind Feed, letters). At the beginning of the message, the channel parity register (the register that is used to half-add a binary count) is cleared by enabling the CPR-ACT hub with PD 3, 4, 5 and 6. Thereafter, the channel parity count is accumulated by taking the CPR-IN enable through the non-select hub of HSS 4d, the non-select side of LSS 6a, and the non-select side of HSS 2 d to the CRP-STEP hub. This results in the half adding of each incoming bit to the content of the Channel Parity Register. Each frame received over Teletype facilities is half-added in this manner until the carriage return, letters combination is detected. Note that the

channel parity register has eight levels. As Teletype facilities utilize only five levels, the upper three levels of the CPR-INPUT are wired directly to the three upper levels of the CPR-OUTPUT. This wiring inhibits comparison on these three levels.

Receipt of a carriage return through DEC I-8 enables hub 1 of 2FD a and receipt of the letters code through bus 1-1 enables hub 2 of 2FD a. The signal out of 2FD a is routed to the common of HSS 3a. If Figures did not precede the carriage return and letters characters, the signal is routed through the non-select hub of HSS 3a, the non-select hub of LSS 7a, to Unibus 18 which enables FD c during the letters character cycle. When FD c2 emits, the signal is routed to HSS 4c which is in the dropped-out condition at this time. FD c2 at this time does nothing. The signal from FD c4 picks up HSS 4. Picking up HSS 4 at this time puts power through the select hub of HSS 4a and the non-select hub of HSS 3b which activates Unibus 18 through bus b-14. During the next character cycle when the channel check character is brought in, power still remains applied to FD c IN and at function time of this character cycle FD c is enabled, FD c2 emits and through HSS 4c S picks up HSS 3 through Bus F7 and Bus a25. Once HSS 3 has been picked up the channel parity register will be activated (cleared) until HSS 4 dropped out. Note that power is now supplied through the select hub of HSS 4a and HSS 3b. HSS 4 is not dropped until the letters character is detected at the end of the channel check group. When the letters hub (DEC I-31) emits, Bus 1-34 and one side of And Gate 5 are activated. The CPR-IN signal from the letters character cycle is routed through the select hub of HSS 3d to drop out HSS 4. During the first character cycle following the letters character cycle of the channel check group, the CPR-IN signal through HSS 4d non-select, LSS 6c non-select, and HSS 2d non-select, steps the channel parity register by half-adding the binary counts of the bits in each of the five channels of the teletype character to the cleared (all ones) content of the register.

The Channel Parity Register non-compare hub (CPR-NC) emits during part of every Input cycle in which the channel parity register does not agree with the incoming character. This enable which occurs with almost every character cycle is qualified by And Gate 4. The other Input to And Gate 4 comes when HSS 4 is in the select position and HSS 3 is in the non-select position. This occurs only when the channel check character is in the Incoming

Buffer Output register. Therefore, if a channel parity register non-compare is present at this time, there will be an output from And Gate 4 and during the channel check character function cycle FD g will be activated. FD g encodes a plus sign (+) and activates HSCL X.

The channel check character can be any code combination of the five teletype levels. If this code combination happens to be the same as some encodable character, this combination is deleted by applying power through HSS 4a select, 3b non-select and Bus b-14 to the Unconditional Delete hub. If the channel check character code represents an invalid character, Unibus 16 Out will emit a signal to HSS 4b and as the select side if unwired this enable will be terminated and no false error will occur. During any other portion of the message an Output from Unibus 16 representing an invalid character is routed through the non-select side of HSS 4b to Unibus 13 which activates FD d.

XVII. Overflow Check:

Normally the Program Distributor will never advance to PD 132. PD is reset to 31 at the beginning of route and should perform the last test for space at PD 130. In Remarks, PD is reset to 91 allowing a maximum of forty-one characters for remarks. If more than thirty-six characters of remarks are encountered, the excess (up to five more) will be stored in the beginning of the track 97. Should PD ever advance to more than 131, function input #1 (Output stop) is enabled to prevent subsequent characters from being read into the buffer and HSCL X is activated to indicate an overflow error. PD is stopped at 132 and any subsequent incoming characters are not encoded.

XVIII. End of Message:

The sequence, figures, carriage return, and letters, signal the presence of the end of message. Figures, through Bus F-7 and a-25 picks up HSS 3. HSS 3 is dropped out with a CPR-OUT signal through And Gate 2. If an error is detected after HSS 3 has been picked up, the CPR-OUT signal (resulting from encoding the ¢ symbol) to HSS 3 DO is terminated at And Gate 2 so that HSS 3 remains picked up. If the Figures code is a precedence code which is followed by another character that is to be encoded, HSS 3 will be dropped with the encoding of the character. However, as carriage

return and letters are not encoded, HSS 3 remains picked up. A carriage return signal from DEC I-8 enables hub 1 of 2FD a and letters enables hub 2 of 2FD a. The output from 2FD a through HSS 3a S enables the end of message group of busses, F-25 through F-30. These busses drop out the selectors indicated, end time out, set precedence to lower case, enable output start, enable the disconnect hub (this allows the scanner to proceed to the next bid) and enable Function Input 6. Note that HSS 3 is also picked up during the substation address character cycle by a signal from FD b4. This wiring will enable the T & F to go Ready and the scanner to advance to the next station requesting service if a message consisting of only figures, carriage return, letters is received.

TABLE I

INPUT FROM HSPT

CHARACTER

	WORD	11	10	9	8	7	6	5	4	3	2	1	S	
TRACK 97	0	S △	S/S				R	J	W	X	12 △	E	14 △	ORIGIN AND KIND
	1						T	1	2	3	4	5	6	IDENT.
	2									T	Y	P	E	TYPE
	3					0	0	7	0	0	2	8	5	ALTITUDE AND SPEED
	4							E	1	2	3	4	△	TIME
	5													
	6	29 △												
	* 7	91 N	O	W	△	I	S	△	T	H	E	△	T	REMARKS
	8	I	M	E	△									

		11	10	9	8	7	6	5	4	3	2	1	S	
TRACK 96	* 0	31 V	L	A	∘	∘	∘	∘	∘	∘	∘	42 △	S	ROUTE
	1	T	L	∘	V	1	2	∘	∘	∘	53 △	I	N	
	2	D	∘	D	R	C	T	∘	∘	64 △	F	W	△	
	3	∘	$						75 △					
	4							86 △						
	5						97 △							
	6					108 △								
	7				119 △									
	8			130 △										

* PD IS RESET TO THE INDICATED VALUE.

TABLE II

ERROR INDICATIONS AND DIAGNOSIS

28 Set Indication	HSCL Indication	Character Encoded	T/W Indication	Position In Error Type Out	Diagnosis
None	X	(,)	→	Flag (Word 5 Character 6) and another	Shift-Buffer-to-UFC (Detection of a local Parity Error)
None	Y	(,)	→	Last Character of a Message	Time Out Error
None	X	(')	↘	Anywhere in a Message	Detection of an illegitimate Message Void
None	X	(¢)	↓	Before Addressor Field	Beginning of Message Error
None	X	(¢)	↓	After a Field	Out of Format
None	X	(¢)	↓	Anywhere in a Message	Detection of a a) Parity error detected at incoming buffer output. b) Detecting an Invalid Character.
None	X	(+)	+	After the following in a Teletype message: a) Altitude b) Route Segment c) Remarks	Detection of incorrect channel parity.
Line Feed, E, Bell	X	(:)	/E	Anywhere in a Teletype message	a) Detection of a character parity error transmitted from another center that was initially detected at the Incoming Buffer-Output register of the sending T & F at sending center.

TABLE II (Continued)

ERROR INDICATIONS AND DIAGNOSIS

28 Set Indication	HSCL Indication	Character Encoded	T/W Indication	Position In Error Type Out	Diagnosis
Line Feed, E or Line Feed, 3	X	(:)	/E or /3	Anywhere in a Teletype message	b) Detection of a character parity error transmitted from another center that was initially detected by the Output Reader at the sending center.
None	X	None	See position in error type out at right	If the route exceeds eight segments up to five of the excess characters will appear after the eighth route segment. If remarks exceeds thirty-six characters the excess characters (up to five) will appear before the addressor field. Note that the substation address will be erased if the excess characters is two or greater.	Message too long, i.e., PD = 132

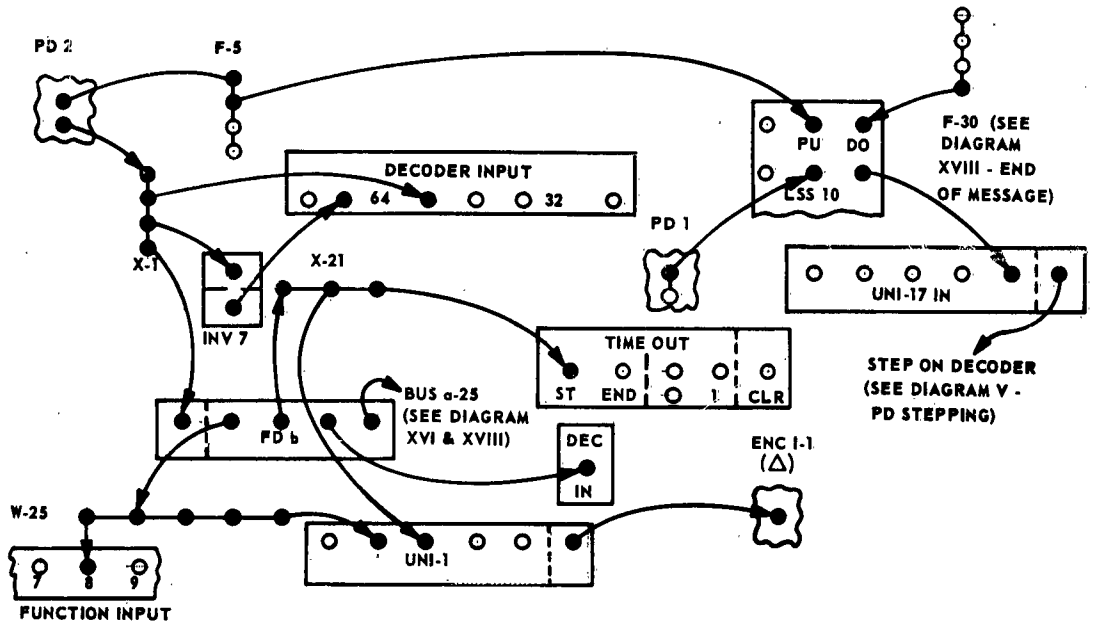

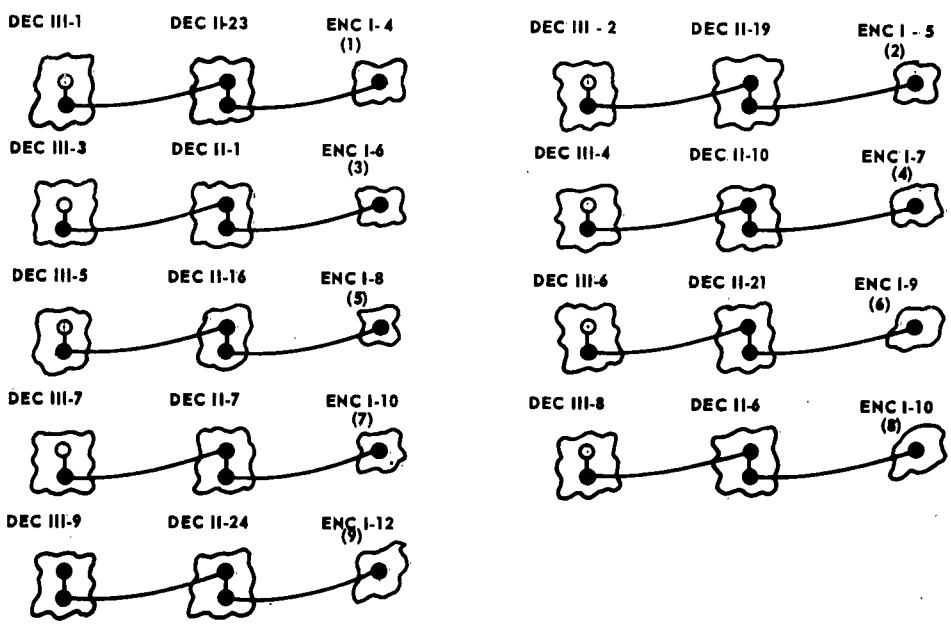

DIAGRAM I TELETYPE SUBSTATION ADDRESSES

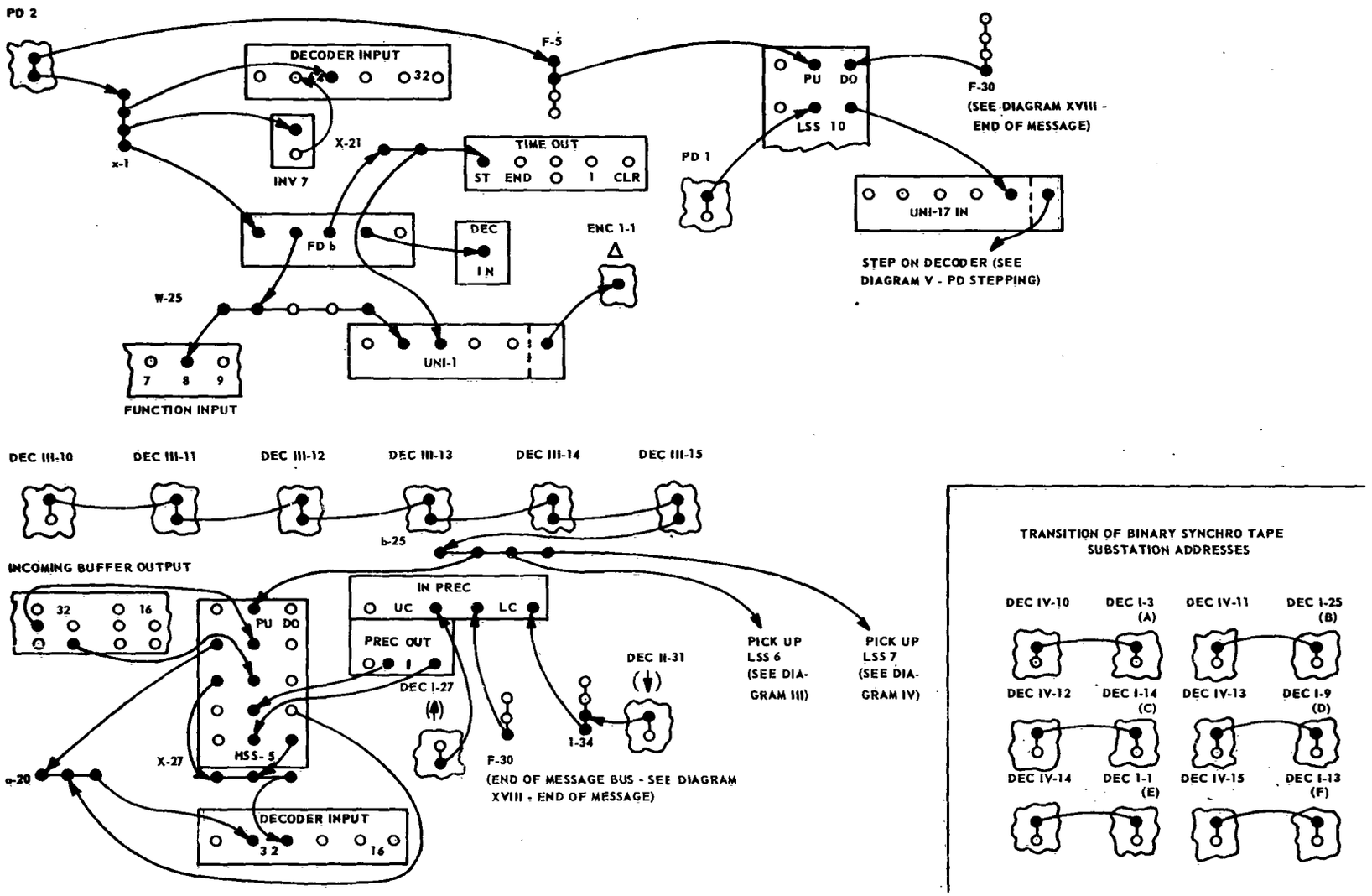

DIAGRAM II SYNCHRO TAPE SUBSTATION ADDRESS

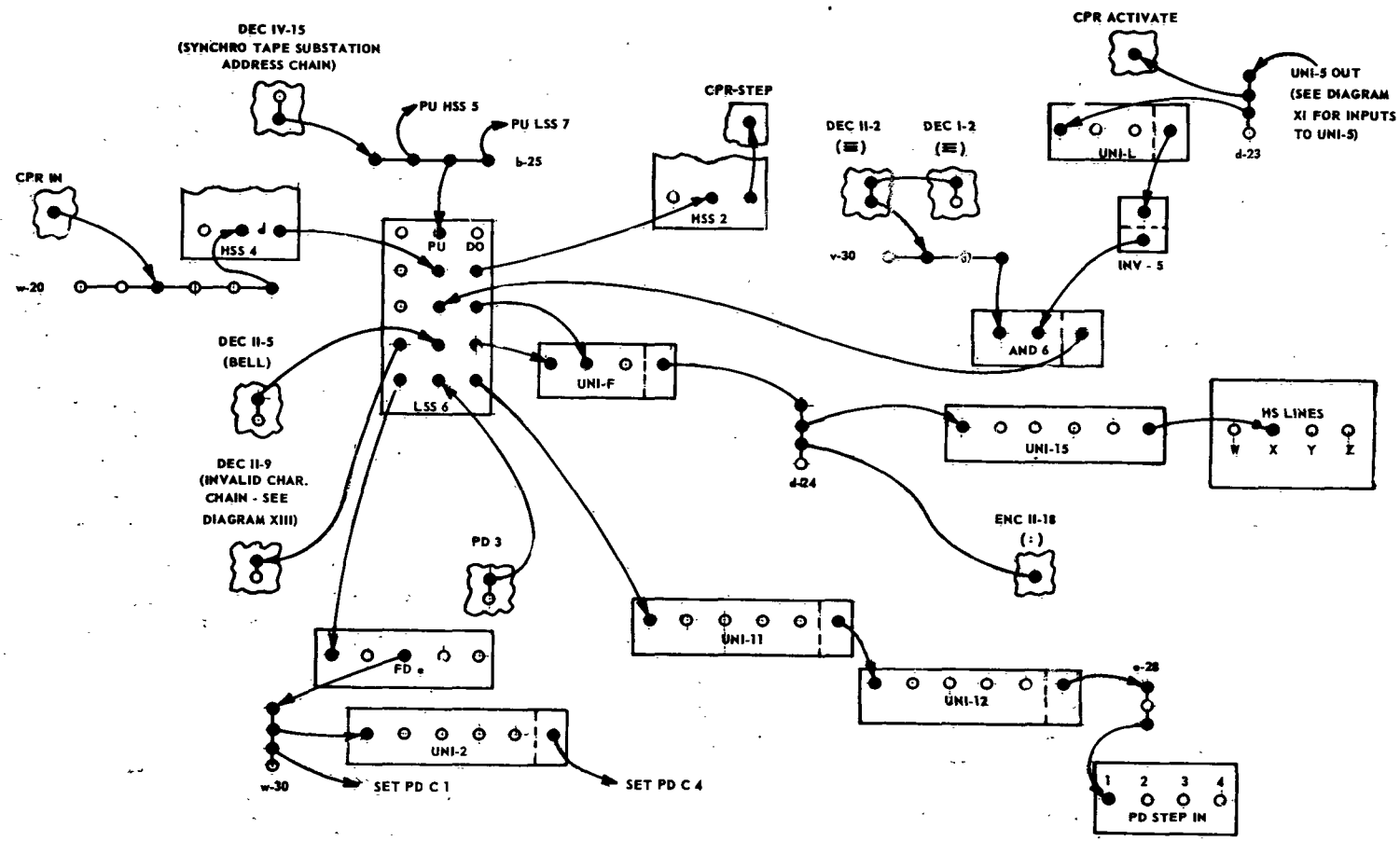

DIAGRAM III SYNCHRO TAPE - TELETYPE

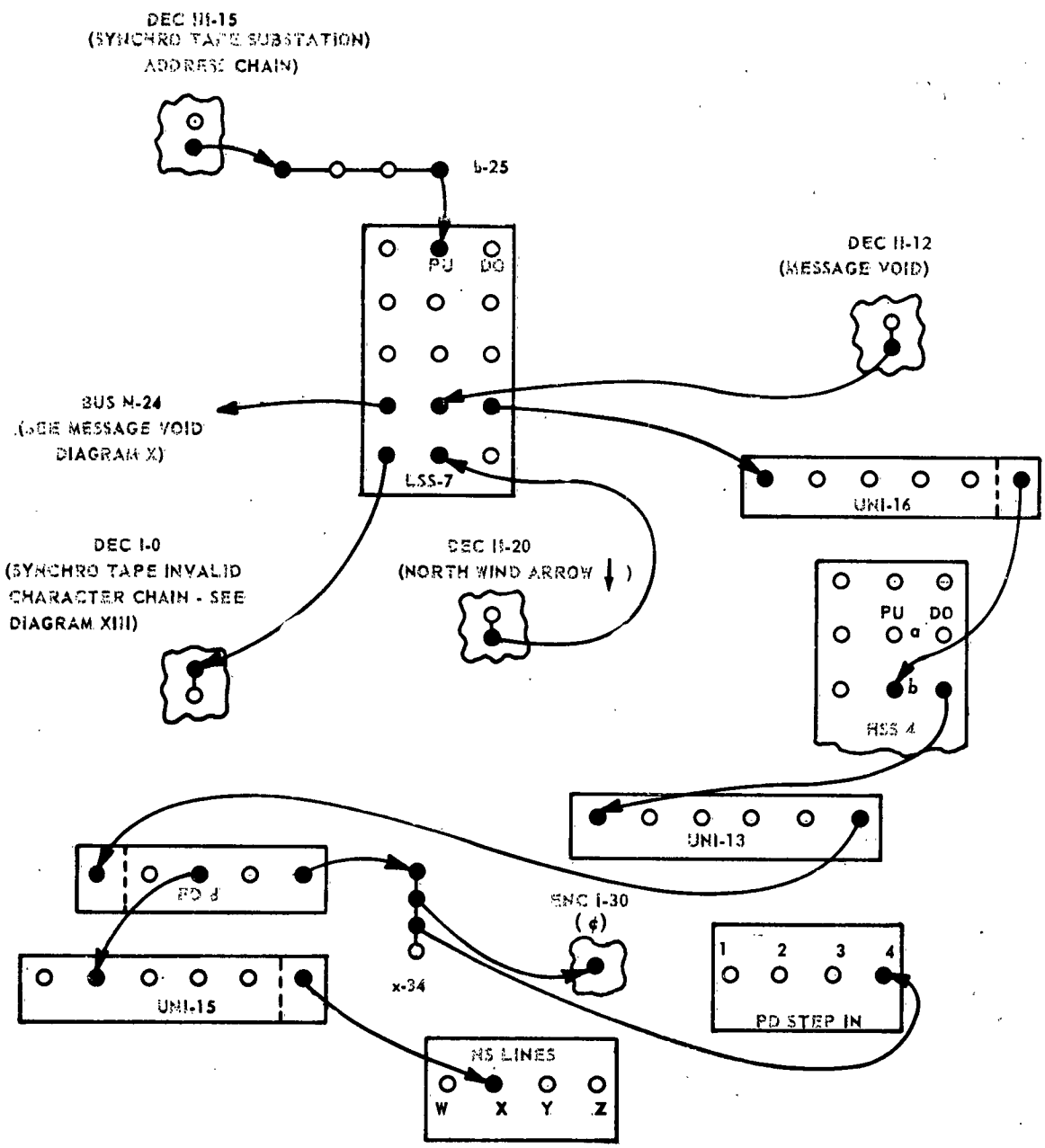

DIAGRAM IV SYNCHRO TAPE - TELETYPE

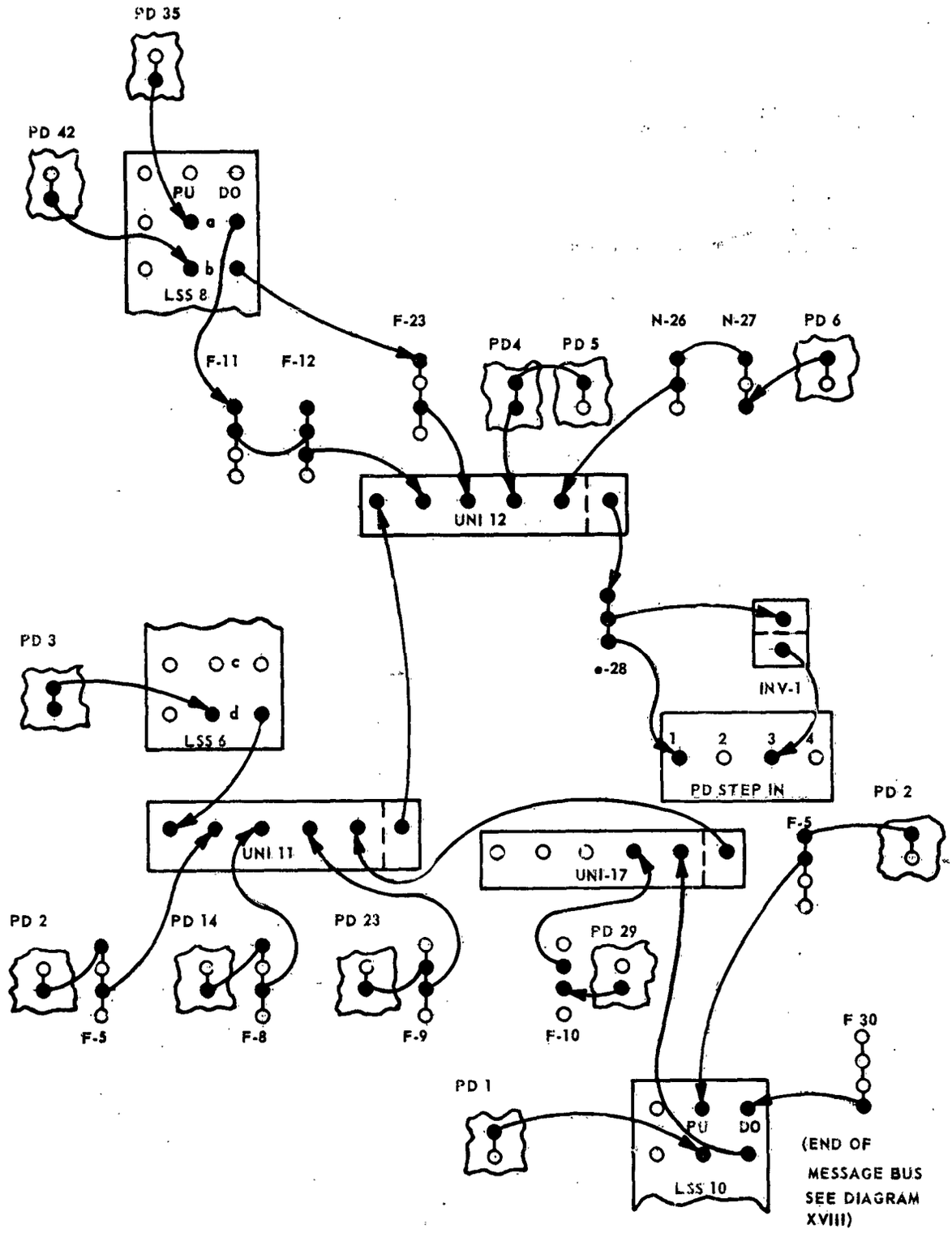

DIAGRAM V PD STEPPING

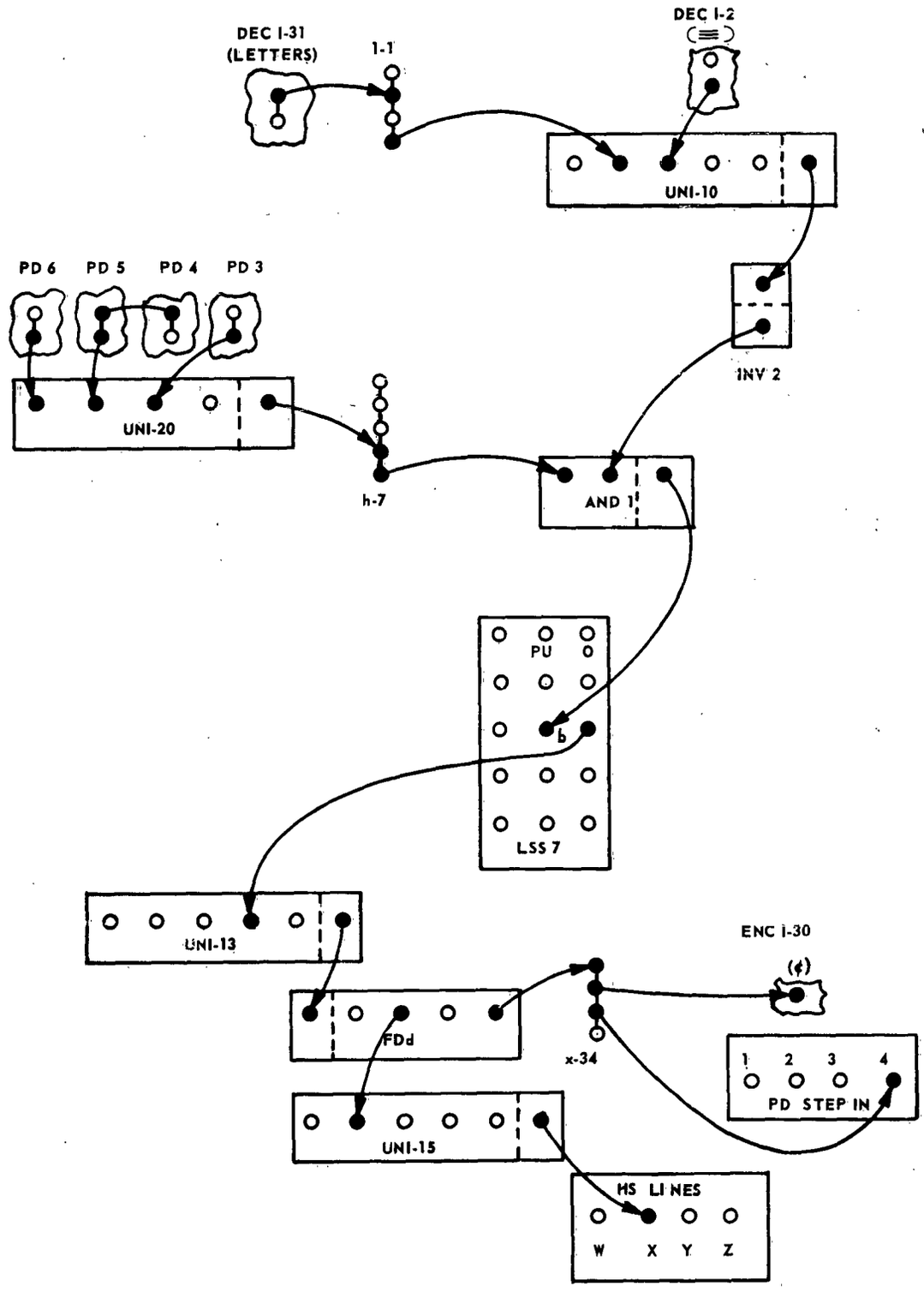

DIAGRAM VI BEGINNING OF MESSAGE CHECK

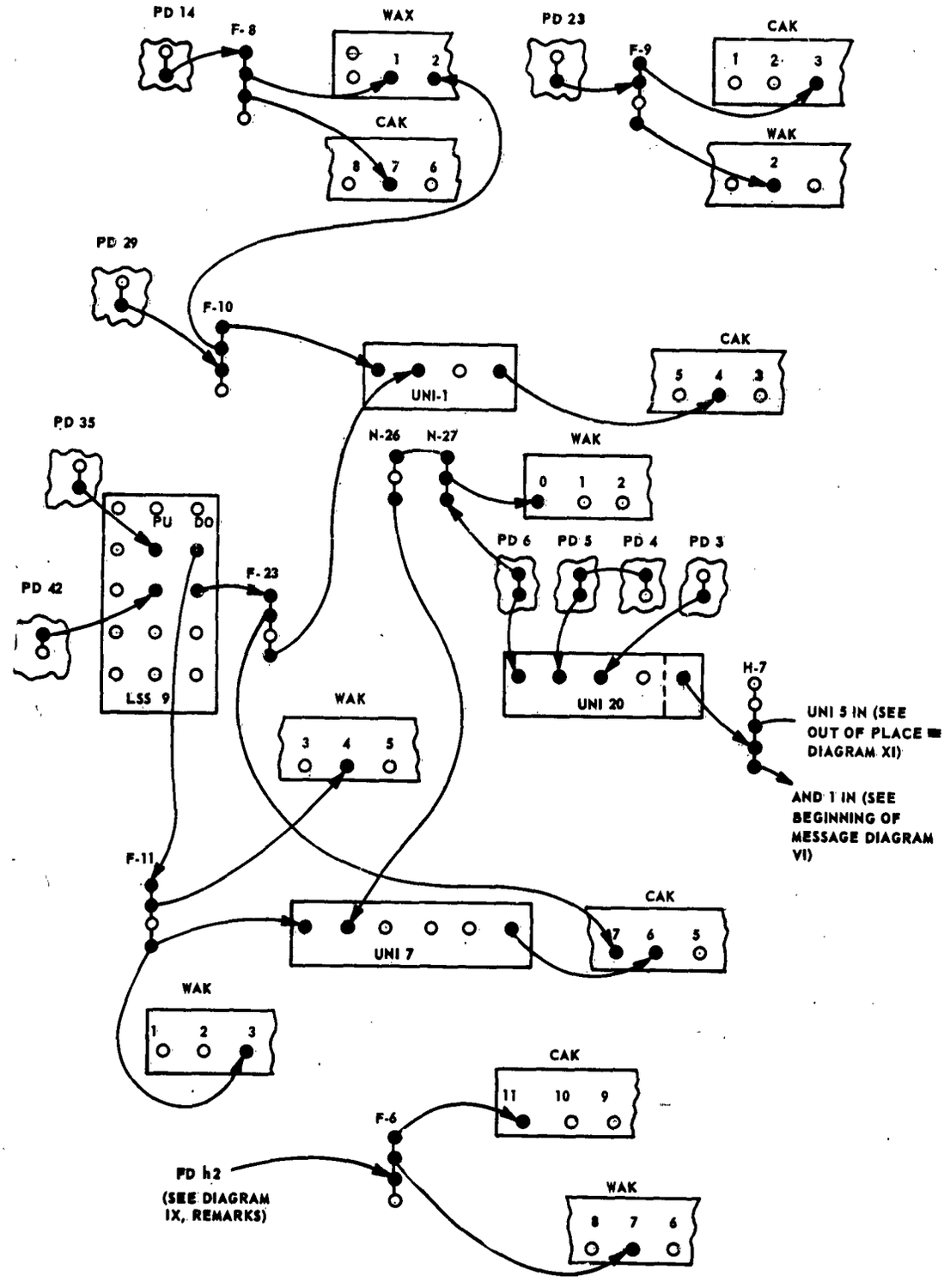

DIAGRAM VII SETTING WORD ON CHARACTER ADDRESS COUNTERS

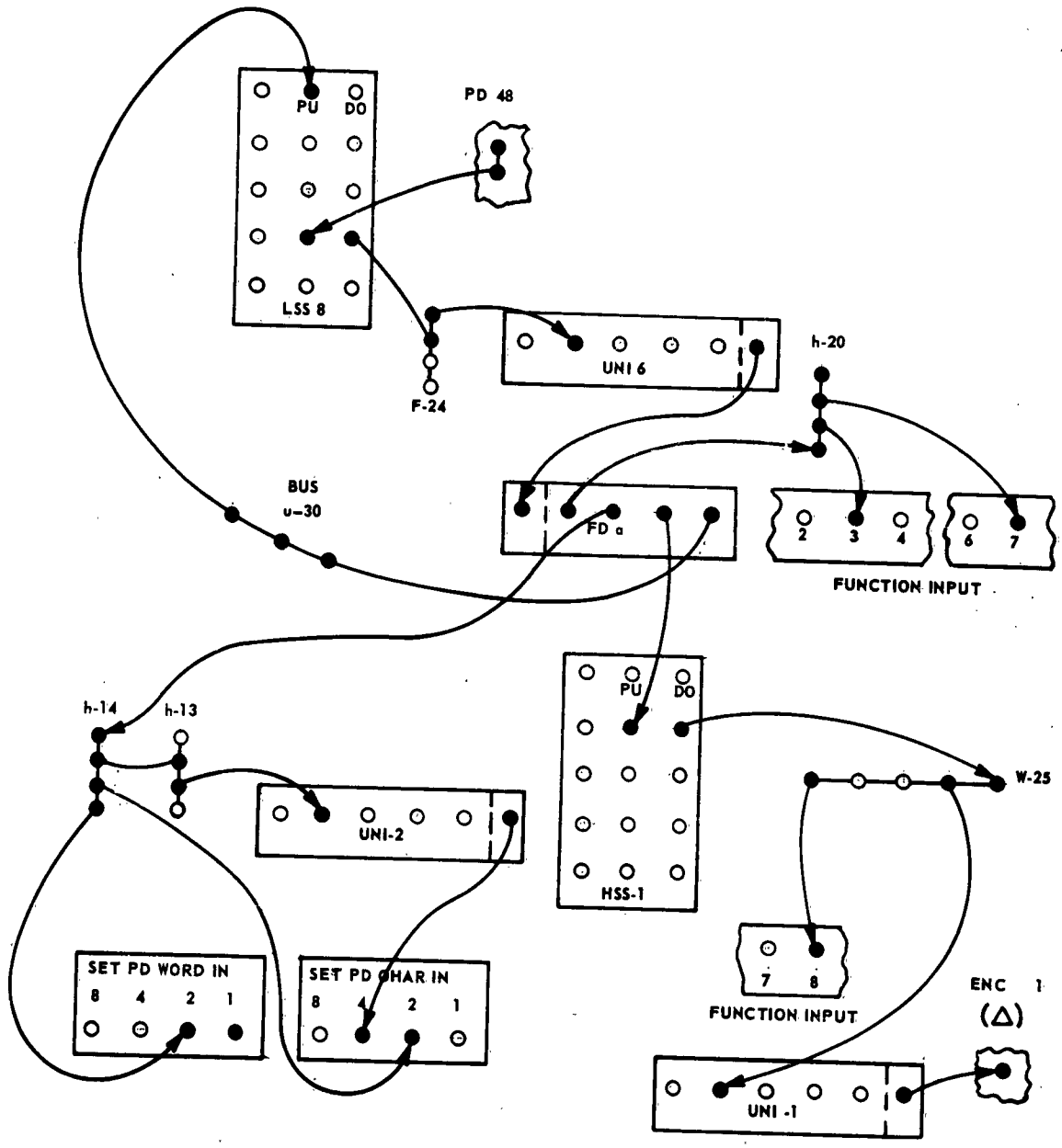

DIAGRAM VIII ROUTE

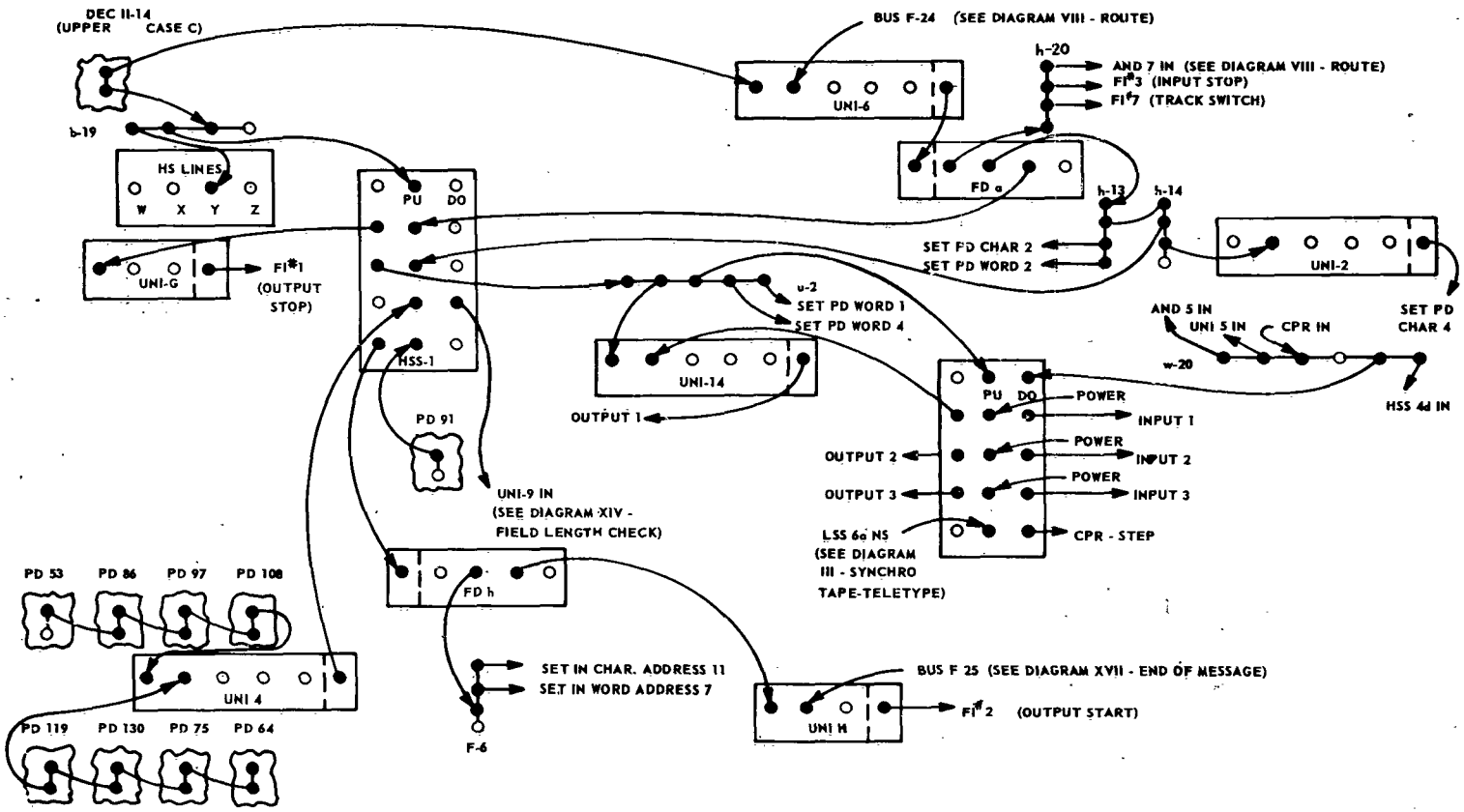

DIAGRAM IX REMARKS

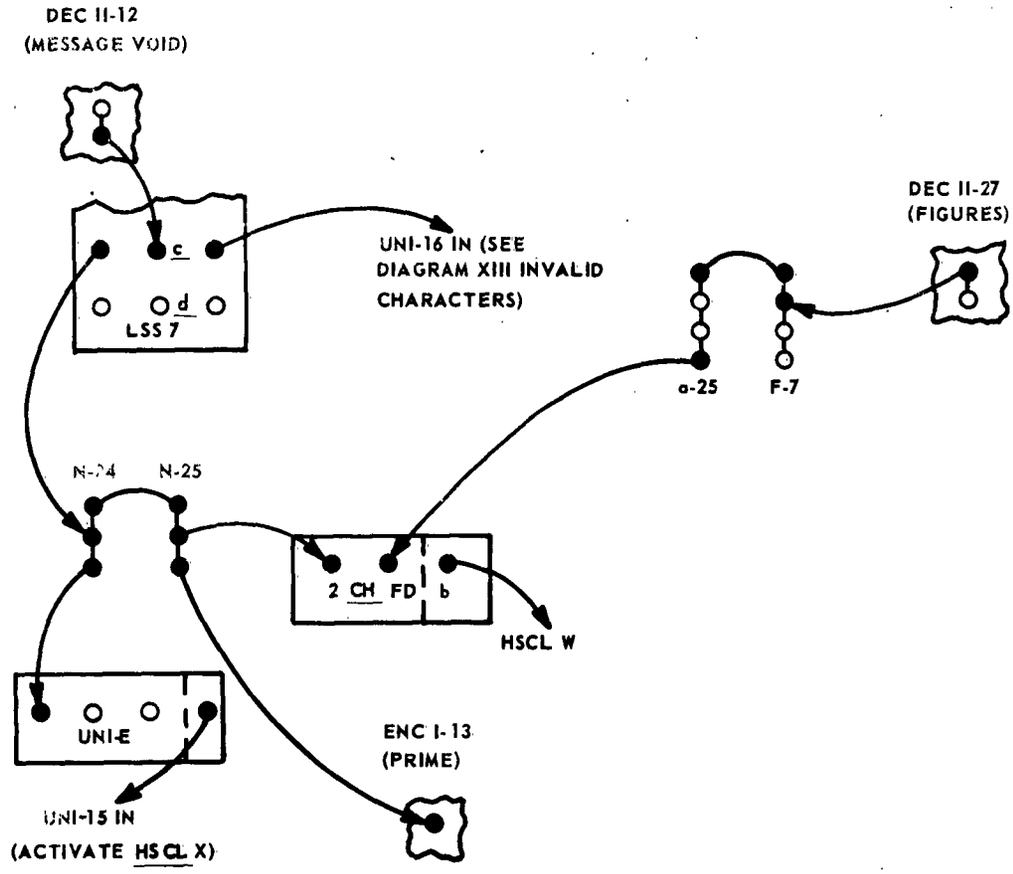

DIAGRAM X MESSAGE VOID

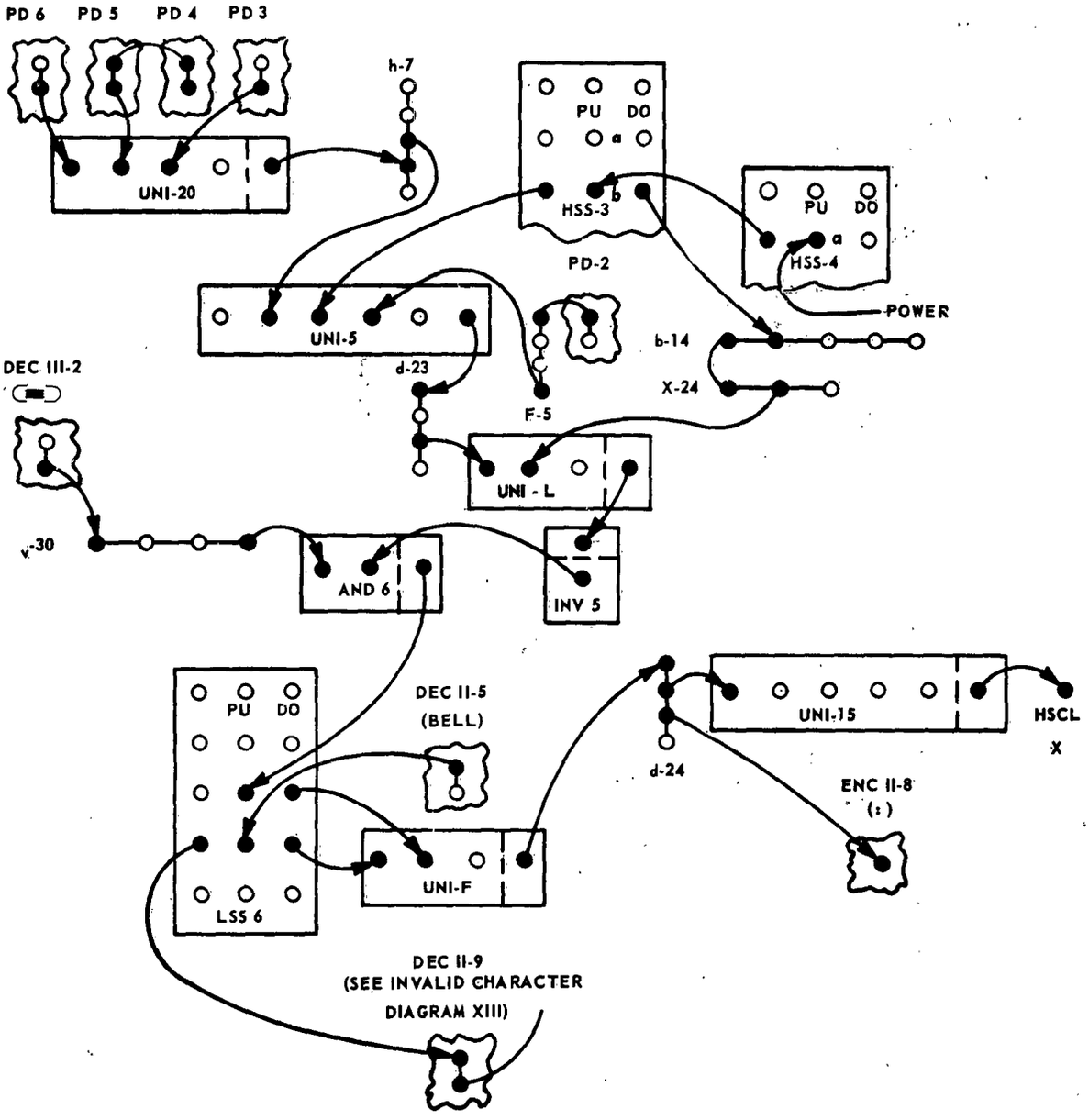

DIAGRAM XI OUT OF PLACE LINE FEED AND BELL SYMBOL (ERRORS TRANSMITTED)

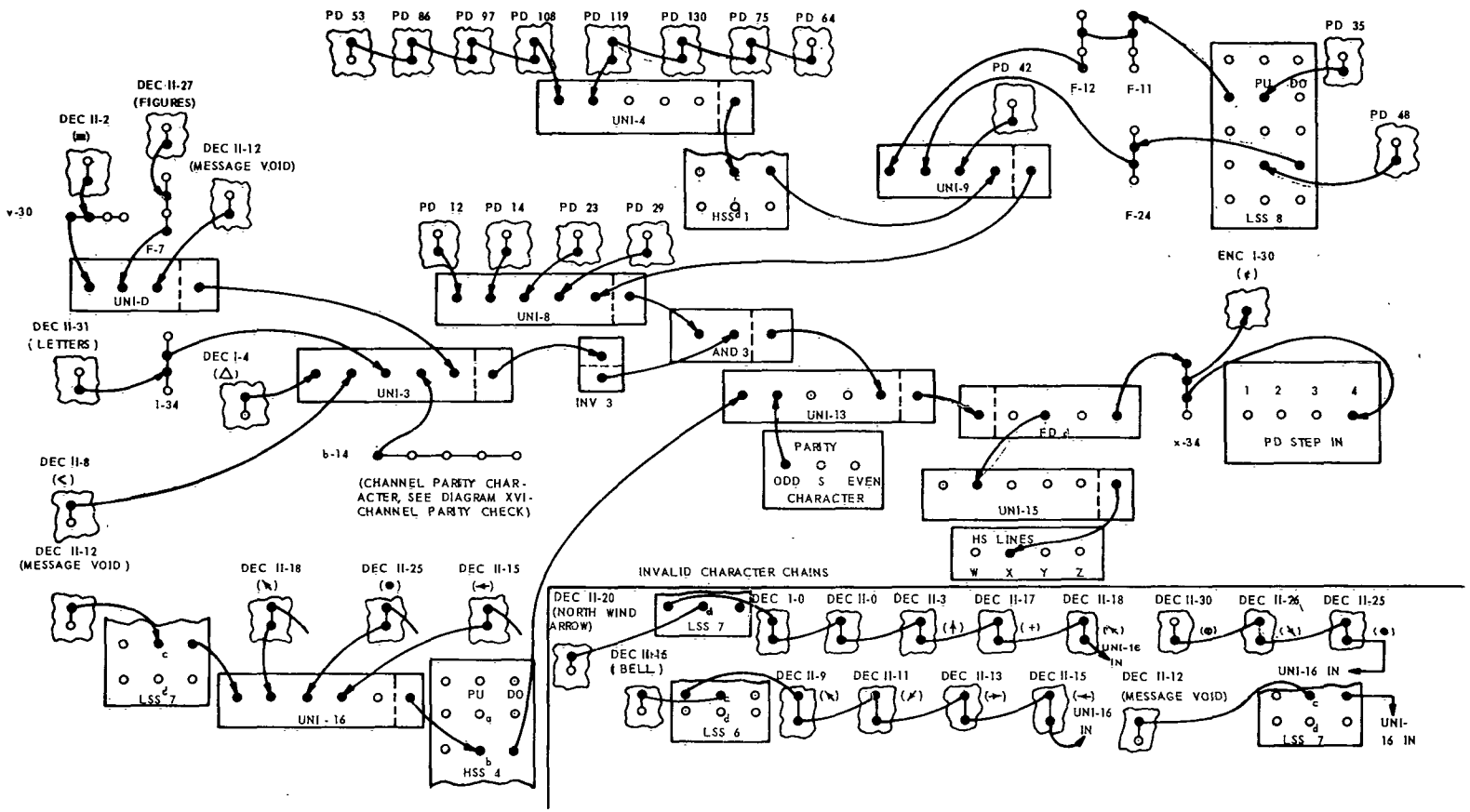

DIAGRAM XII CHARACTER PARITY CHECK

DIAGRAM XIII INVALID CHARACTER CHECK

DIAGRAM XIV FIELD LENGTH CHECK

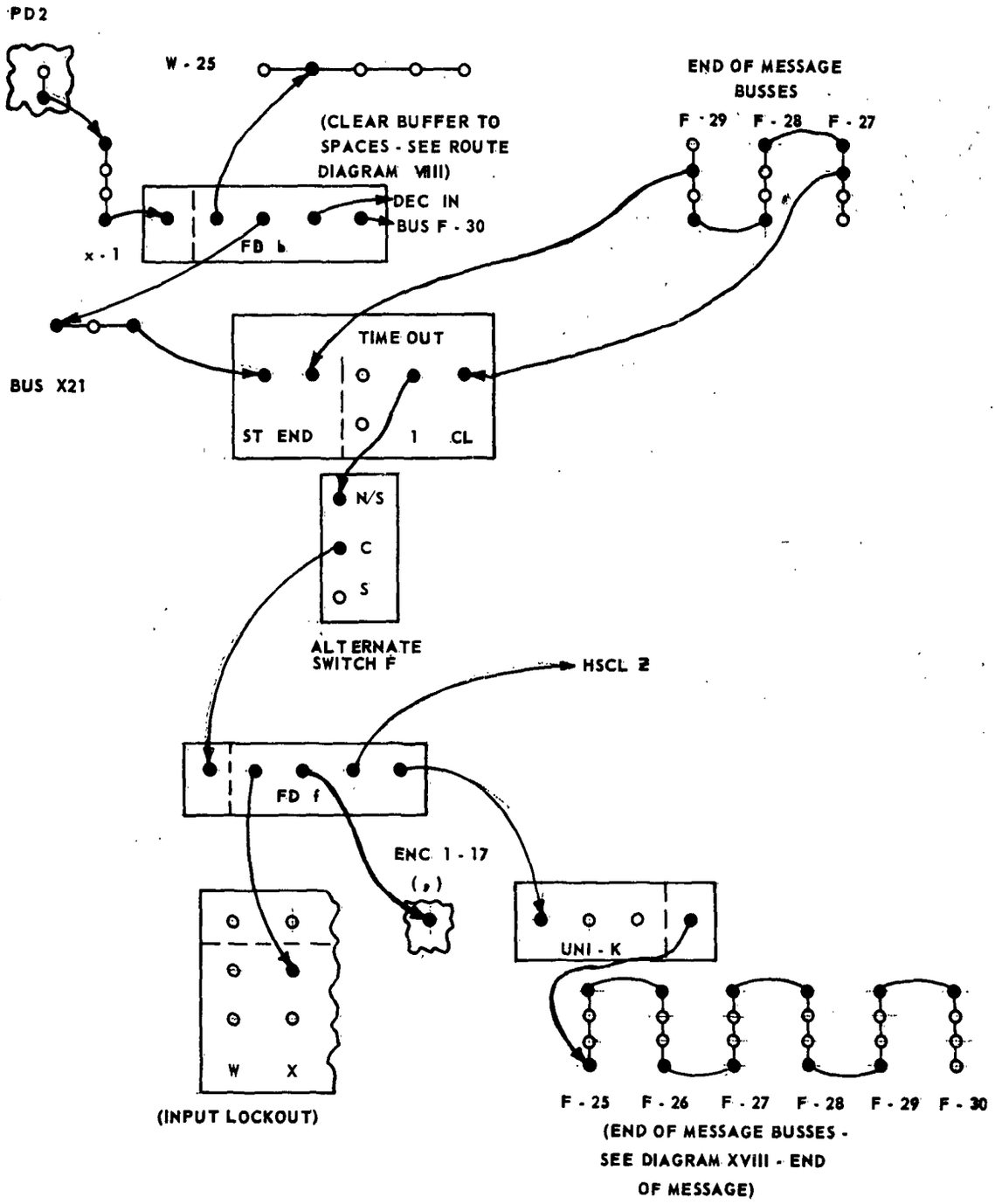

DIAGRAM XV TIME OUT

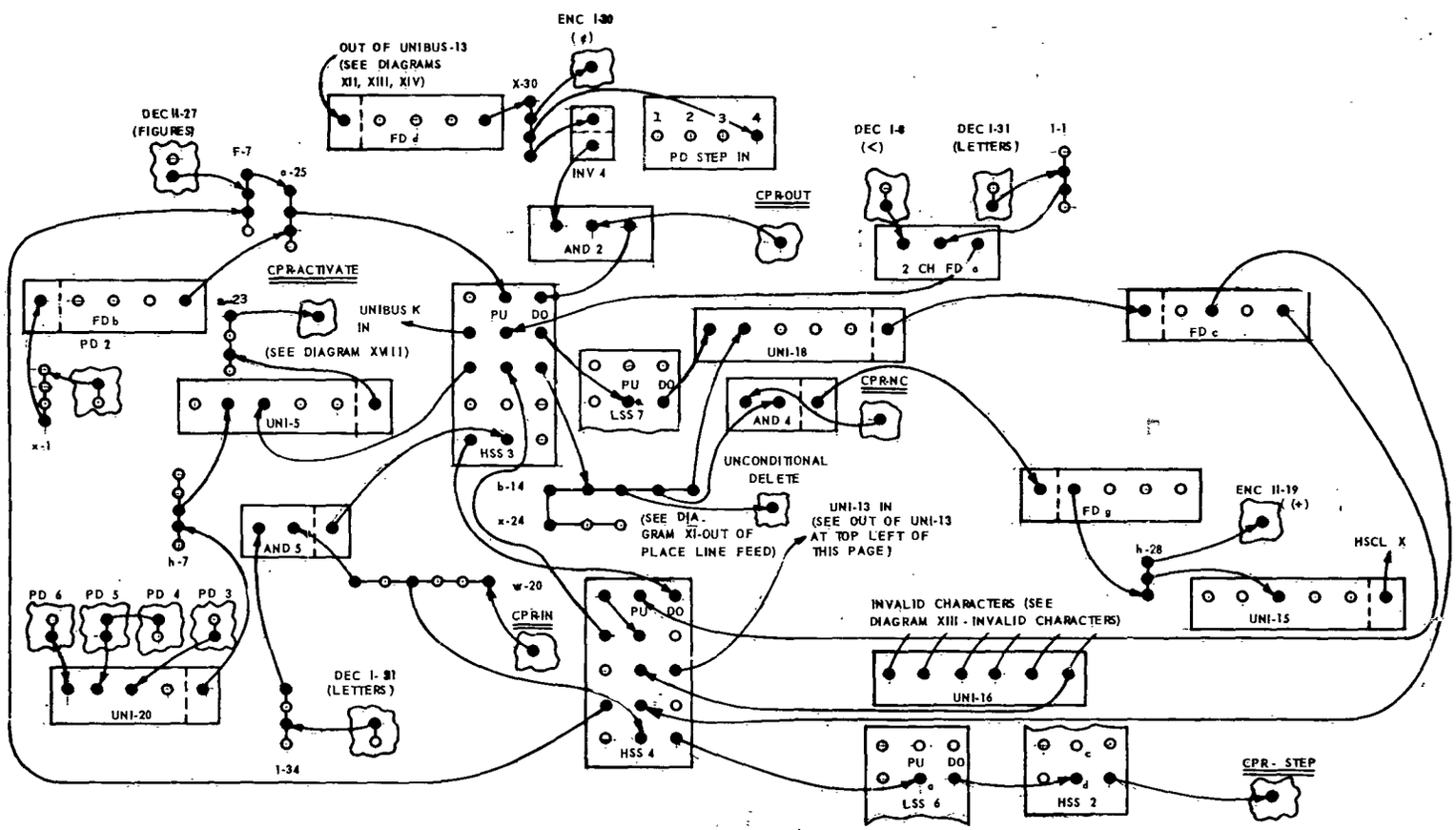

DIAGRAM XVI CHANNEL PARITY CHECK

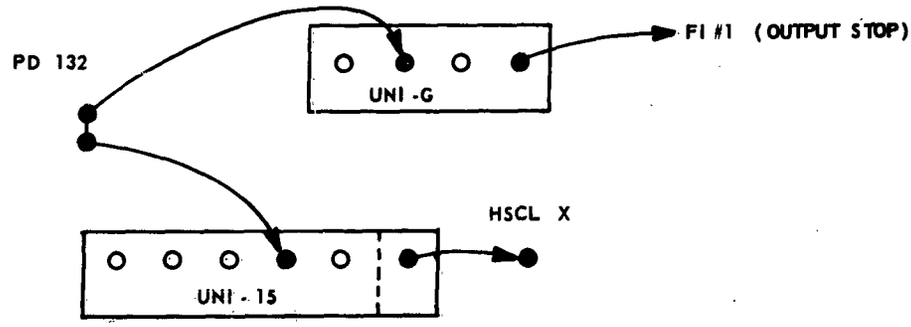

DIAGRAM XVII OVERFLOW CHECK

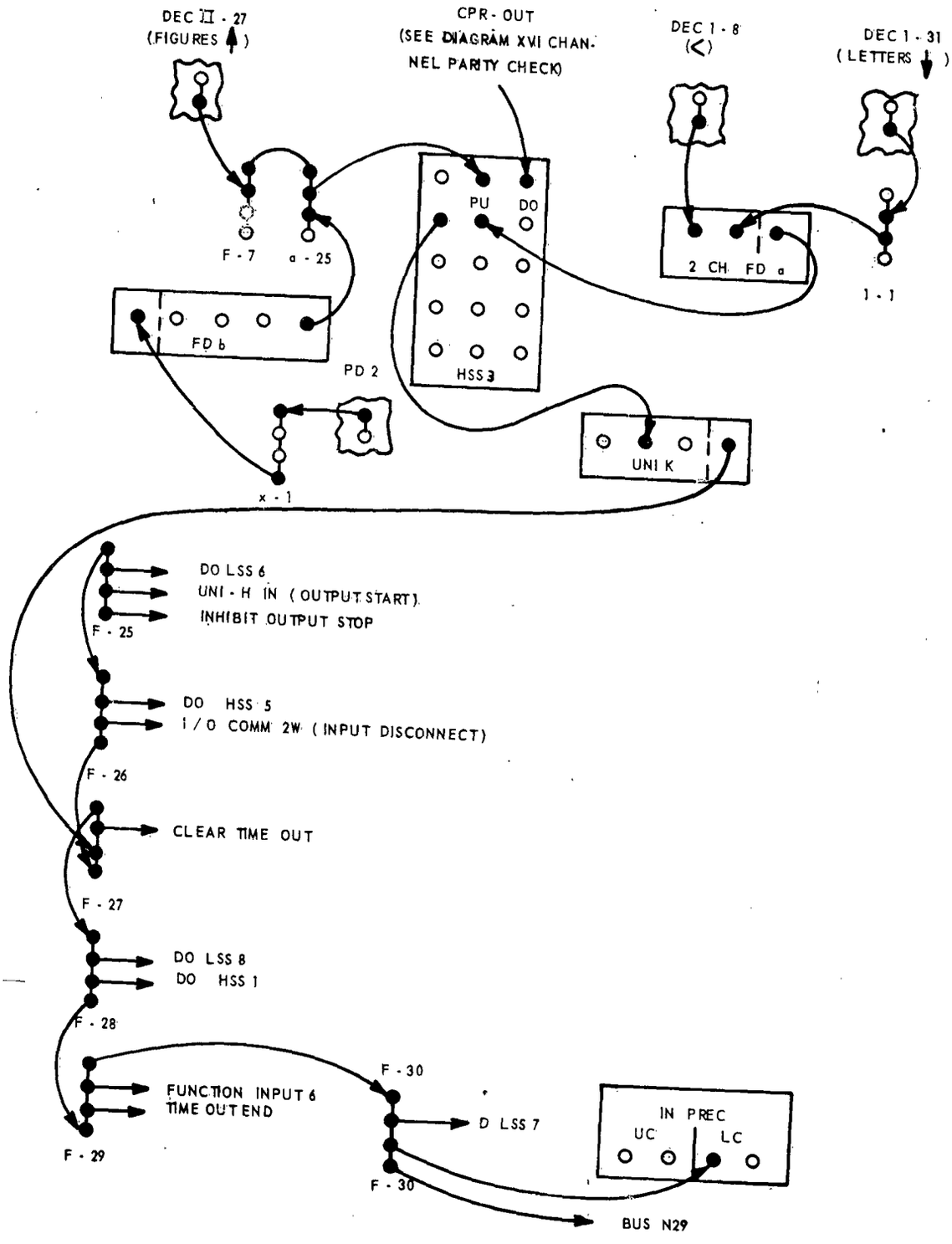

DIAGRAM XVIII END OF MESSAGE

T & F UNIT - DECODER WIRING

PROGRAM: FAA INPUT MESSAGE

DECODER OUTPUT, GP. I		CODE	
HUB	WIRED TO	CHAR.	PURPOSE
0	LSS 7d S DEC II-0		INVALID
1	DEC IV-14 ENC I-24	E	
2	DEC II-2 UNI 10 IN	≡	
3	DEC IV-10 ENC I-20	A	
4	DEC II-4 UNI 3 IN	△	
5	ENC II-21	S	
6	ENC I-28	I	
7	ENC II-23	U	
8	2FD a1 DEC II-8	<	
9	DEC IV-13 ENC I-23	D	
10	ENC II-12	R	
11	ENC II-4	J	
12	ENC II-8	N	
13	DEC IV-15 ENC I-25	F	
14	DEC IV-12 ENC I-22	C	
15	ENC II-5	K	
16	ENC II-22	T	
17	ENC II-28	Z	
18	ENC II-6	L	
19	ENC II-25	W	
20	ENC I-27	H	
21	ENC II-27	Y	
22	ENC II-10	P	
23	ENC II-11	Q	
24	ENC II-9	O	
25	DEC IV-11 ENC I-21	B	
26	ENC I-26	G	

DECODER OUTPUT, GP. II		CODE	
HUB	WIRED TO	CHAR.	PURPOSE
0	DEC II-3 DEC I-0		INVALID
1	ENC I-6 DEC III-3	3	SS #3
2	DEC I-2 BUS v-30	≡	OUT OF PLACE ≡
3	DEC II-0 DEC II-17	↑	INVALID
4	DEC I-4 UNI 1 IN	△	ENCODE △
5	LSS 6c C	BELL	TTY BELL SYNCHRO INV
6	DEC III-S ENC I-11	8	SS #8
7	DEC III-7 ENC I-10	7	SS #7
8	DEC I-8 UNI 3-IN	<	
9	DEC II-11 LSS 6c S	↗	INVALID
10	DEC III-4 ENC I-7	4	SS #4
11	DEC II-9 DEC II-13	↙	INVALID
12	UNI D IN LSS 7c C	MSG. VOID	TTY INVALID
13	DEC II-11 DEC II-15	→	INVALID
14	UNI 6 IN BUS b-19	↑C	REMARKS
15	DEC II-13 UNI 16 IN	←	INVALID
16	ENC I-8 DEC III-5	5	SS #5
17	DEC II-18 DEC II-3	+	INVALID
18	DEC II-17 UNI 16 IN	↖	INVALID
19	DEC III-2 ENC I-5	2	SS #2
20		↓	DELETE
21	DEC III-6 ENC I-9	6	SS #6
22	ENC I-3	Ø	
23	DEC III-1 ENC I-4	1	SS #1
24	ENC I-12 DEC III-9	9	
25	DEC II-26 UNI 16 IN	⊕	INVALID
26	DEC II-30 DEC II-25	↘	INVALID

T & F UNIT - DECODER WIRING (CONTINUED)

PROGRAM: FAA INPUT MESSAGE

DECODER OUTPUT, GP. I		CODE	
HUB	WIRED TO	CHAR	PURPOSE
27	IN PREC UC DEC II-27	FIG	
28	ENC- II-7	M	
29	ENC II-26	X	
30	ENC II-24	V	
31	BUS I-1 DEC II-31	LTRS	

DECODER OUTPUT, GP. II		CODE	
HUB	WIRED TO	CHAR	PURPOSE
27	DEC I-27 BUS F-7	FIG	
28	ENC I-18	•	DOT PAD
29	ENC I-2	/	ENCODE -
30	DEC II-26	⦶	INVALID
31	DEC I-31 BUS I-34	LTRS	

T & F UNIT - DECODER WIRING

PROGRAM: FAA INPUT MESSAGE

DECODER OUTPUT, GP. III			CODE
HUB	WIRED TO	CHAR.	PURPOSE
0			
1	DEC II-23	1	SS #1
2	DEC II-19	2	SS #2
3	DEC II-1	3	SS #3
4	DEC II-10	4	SS #4
5	DEC II-16	5	SS-#5
6	DEC II-21	6	SS #6
7	DEC II-7	7	SS #7
8	DEC II-6	8	SS #8
9	DEC II-24	9	SS #9
10	DEC III-11		PICK UP :
11	DEC III-10 DEC III-12		HSS 5
12	DEC III-11 DEC III-13		LSS 6
13	DEC III-12 DEC III-14		LSS 7
14	DEC III-13 DEC III-15		
15	DEC III-14 BUS b-25		
16			
17			
18			
19			
20			
21			
22			
23			
24			
25			
26			

DECODER OUTPUT, GP. IV			CODE
HUB	WIRED TO	CHAR.	PURPOSE
0			
1			
2			
3			
4			
5			
6			
7			
8			
9			
10	DEC I-3	A	SS #10
11	DEC I-25	B	SS #11
12	DEC I-14	C	SS #12
13	DEC I-9	D	SS #13
14	DEC I-1	E	SS #14
15	DEC I-13	F	SS #15
16			
17			
18			
19			
20			
21			
22			
23			
24			
25			
26			

T & F UNIT - DECODER WIRING (CONTINUED)

PROGRAM: FAA INPUT MESSAGE

DECODER OUTPUT, GP. III			CODE
HUB	WIRED TO	CHAR	PURPOSE
27			
28			
29			
30			
31			

DECODER OUTPUT, GP. IV			CODE
HUB	WIRED TO	CHAR	PURPOSE
27			
28			
29			
30			
31			

ENC. INPUT, GP. I			ENC. INPUT, GP. II			ENC. INPUT, GP. III			ENC. INPUT, GP. IV		
HUB	WIRED FROM	CHAR	HUB	WIRED FROM	CHAR	HUB	WIRED FROM	CHAR	HUB	WIRED FROM	CHAR
0		i	0		t	0			0		
1	UNI 1 OUT	Δ	1		"	1			1		
2	DEC II-29	-	2		|	2			2		
3	DEC II-22	0	3		)	3			3		
4	DEC II-23	1	4	DEC I-11	J	4			4		
5	DEC II-19	2	5	DEC I-15	K	5			5		
6	DEC II-1	3	6	DEC I-18	L	6			6		
7	DEC II-10	4	7	DEC I-28	M	7			7		
8	DEC II-16	5	8	DEC I-12	N	8			8		
9	DEC II-21	6	9	DEC I-24	O	9			9		
10	DEC II-7	7	10	DEC I-22	P	10			10		
11	DEC II-6	8	11	DEC I-23	Q	11			11		
12	DEC II-24	9	12	DEC I-10	R	12			12		
13	BUS N-25	'	13		$	13			13		
14		&	14		*	14			14		
15		(	15		?	15			15		
16		r	16		Σ	16			16		
17	FD f2	,	17		β	17			17		
18	DEC II-28	°	18	BUS d-24	:	18			18		
19		;	19	BUS h-28	+	19			19		
20	DEC I-3	A	20		/	20			20		
21	DEC I-25	B	21	DEC I-5	S	21			21		
22	DEC I-14	C	22	DEC I-16	T	22			22		
23	DEC I-9	D	23	DEC I-7	U	23			23		
24	DEC I-1	E	24	DEC I-30	V	24			24		

T & F UNIT - ENCODER WIRING (CONTINUED)

PROGRAM: FAA INPUT MESSAGE

ENC. INPUT.GP. I			ENC.INPUT.GP. II			ENC.INPUT.GP. III			ENC.INPUT.GP. IV		
HUB	WIRED FROM	CHAR	HUB	WIRED FROM	CHAR	HUB	WIRED FROM	CHAR	HUB	WIRED FROM	CHAR
25	DEC I-13	F	25	DEC I-19	W	25			25		
26	DEC I-26	G	26	DEC I-29	X	26			26		
27	DEC I-20	H	27	DEC I-21	Y	27			27		
28	DEC I-6	I	28	DEC I-17	Z	28			28		
29		#	29		%	29			29		
30	BUS x-34	¢	30		=	30			30		
31		@	31		DEL	31			31		

T & F UNIT - DECODER/ENCODER WIRING

PROGRAM: FAA INPUT MESSAGE

INCOMING BUFFER OUTPUT		
HUB	WIRED TO	PURPOSE
1	CPR IN 1 DEC IN 1	
0	DEC IN 0-1	
2	CPR IN 2 DEC IN 2	
0	DEC IN 0-2	
4	CPR IN 4 DEC IN 4	
0	DEC IN 0-4	
8	CPR IN 8 DEC IN 8	
0	DEC IN 0-8	
16	CPR IN 16 DEC IN 16	
0	DEC IN 0-16	
32	HSS 5b IN	
0	HSS 5a IN	
64	UNWIRED	
0	UNWIRED	
PAR	DEC IN PAR	
0	DEC IN 0-PAR	

ENCODER OUTPUT		
HUB	WIRED TO	PURPOSE
1	P/C 1	
2	P/C 2	
4	P/C 4	
8	P/C 8	
16	P/C 16	
32	P/C 32	
64	UNWIRED	
PAR	P/C PAR	

INCOMING PERC. OUTPUT		
HUB	WIRED TO	PURPOSE
1	HSS 5d IN	
0	HSS 5c IN	

OUTGOING PREC. OUTPUT		
HUB	WIRED TO	PURPOSE
LC		
UC		

INC. PREC. IN	
HUB	WIRED FROM
$\overline{UC}$	DEC I-27
$\overline{UC}$	
LC	BUS 1-34
LC	BUS F-30

OUT. PREC. IN		
HUB	WIRED	FROM
IN		
INH		

T & F UNIT - DECODER/ENCODER WIRING (CONTINUED)

PROGRAM: FAA INPUT MESSAGE

DECODER INPUT		PUNCH/COMP. INPUT		DELETE	DELETE
HUB	WIRED FROM		WIRED FROM	WIRED FROM	WIRED FROM
1	IN BUFF 1	1a	ENC OUT 1	POWER	
0	IN BUFF 0-1	1b			
2	IN BUFF 2	2a	ENC OUT 2		
0	IN BUFF 0-2	2b			
4	IN BUFF 4	4a	ENC OUT 4		
0	IN BUFF 0-4	4b			
8	IN BUFF 8	8a	ENC OUT 8		
0	IN BUFF 0-8	8b			
16	IN BUFF 16	16a	ENC OUT 16		
0	IN BUFF 0-16	16b			
32	BUS X-27	32a	ENC OUT 32		
0	BUS a-20	32b			
64	BUS x-1	64a	UNWIRED		
0	INV 7 OUT	64b	UNWIRED		
PAR	IN BUFF PAR	PARa	ENC OUT PAR		
0	IN BUFF 0-PAR	PARb			

T & F UNIT - SELECTOR WIRING

PROGRAM: FAA INPUT MESSAGE

HIGH SPEED SEL. 1			
PURPOSE: REMARKS			
PU HUB WIRED FROM		DO HUB WIRED FROM	
BUS b-19		BUS F-28	
ELEMENT	S HUB TO	IN HUB FROM	NS HUB TO
a	UNI G IN	FD a3	BUS W-25
b	BUS u-2	BUS h-14	
c		UNI 4 OUT	UNI 9 IN
d	FD h IN	PD 91	

HIGH SPEED SEL. 2			
PURPOSE: I/O MODE			
PU HUB WIRED FROM		DO HUB WIRED FROM	
BUS u-2		BUS w-20	
ELEMENT	S HUB TO	IN HUB FROM	NS HUB TO
a	UNI 14 IN	PWR	INPUT 1
b	OUTPUT 2	PWR	INPUT 2
c	OUTPUT 3	PWR	INPUT 3
d		LSS 6a NS	CPR STEP

HIGH SPEED SEL. 3			
PURPOSE: CHANNEL PARITY			
PU HUB WIRED FROM		DO HUB WIRED FROM	
BUS a-25		AND 2-OUT	
ELEMENT	S HUB TO	IN HUB FROM	NS HUB TO
a	UNI K IN	2FD a OUT	LSS 7a C
b	UNI 5 IN	HSS 4a S	BUS b-14
c			
d	HSS 4 DO	AND 5 OUT	

LOW SPEED SEL. 6			
PURPOSE: SYNCHRO TAPE			
PU HUB WIRED FROM		DO HUB WIRED FROM	
BUS b-25		BUS F-25	
ELEMENT	S HUB TO	C HUB FROM	NS HUB TO
a		HSS 4d NS	HSS 2d IN
b		AND 6 OUT	UNI-F IN
c	DEC II-9	DEC II-5	UNI-F IN
d	FD e IN	PD 3	UNI 11 IN

LOW SPEED SEL. 7			
PURPOSE: SYNCHRO TAPE			
PU HUB WIRED FROM		DO HUB WIRED FROM	
BUS b-25		BUS F-30	
ELEMENT	S HUB TO	C HUB FROM	NS HUB TO
a		HSS 3a N/S	UNI-18 IN
b		AND 1 OUT	UNI-13 IN
c	BUS N-24	DEC II-12	UNI 16 IN
d	DEC I-0	DEC II-20	

LOW SPEED SEL. 8			
PURPOSE: ROUTE			
PU HUB WIRED FROM		DO HUB WIRED FROM	
BUS u 30		BUS E 28	
ELEMENT	S HUB TO	C HUB FROM	NS HUB TO
a		PD 35	BUS F-11
b		PD 42	BUS F-23
c		PD 48	BUS F-24
d			

T & F UNIT - SELECTOR WIRING (CONTINUED)

PROGRAM: FAA INPUT MESSAGE

HIGH SPEED SEL. 4			
PURPOSE: CHANNEL PARITY			
PU HUB WIRED FROM		DO HUB WIRED FROM	
FD c4		HSS 3d S	
ELEMENT	S HUB TO	IN HUB FROM	NS HUB TO
a	HSS 3b IN	PWR	
b		UNI 16 OUT	UNI 13 IN
c	BUS F-7	FD c2	
d		BUS w-20	LSS 6a C

LOW SPEED SEL. 9			
PURPOSE: CHECK FOR SPACE FOLLOWING ALT.			
PU HUB WIRED FROM		DO HUB WIRED FROM	
BUS u 30		BUS N29	
ELEMENT	S HUB TO	C HUB FROM	NS HUB TO
a			
b			
c			
d		PD 47	BUS N28

HIGH SPEED SEL. 5			
PURPOSE: SYNCHRO TAPE			
PU HUB WIRED FROM		DO HUB WIRED FROM	
BUS b-25		BUS F-26	
ELEMENT	S HUB TO	IN HUB FROM	NS HUB TO
a	BUS a-20	IN BUFF 0-32	
b	BUS X-27	IN BUFF 32	
c		PREC OUT 0	BUS a-20
d		PREC OUT 1	BUS X-27

LOW SPEED SEL. 10			
PURPOSE:			
PU HUB WIRED FROM		DO HUB WIRED FROM	
BUS F-5		BUS N 29	
ELEMENT	S HUB TO	C HUB FROM	NS HUB TO
a		PD 1	UNI 17 IN
b			
c			
d			

T & F UNIT - FUNCTION DETECTOR WIRING

PROGRAM: FAA INPUT MESSAGE

FUNCTION DETECTOR a		
PURPOSE: REMARKS AND ROUTE		
INPUT HUB WIRED FROM: UNI 6 OUT		
OUT HUB	WIRED TO	PURPOSE
1	BUS h-20	INPUT STOP TRACK SWITCH
2	BUS h-13	SET PD TO 31
3	HSS 1a IN	OUTPUT STOP CLEAR BUFF. TO 's
4	BUS u 30	PICK UP ROUTE SELECTORS

FUNCTION DETECTOR b		
PURPOSE: BEGINNING OF MESSAGE		
INPUT HUB WIRED FROM: BUS x-1		
OUT HUB	WIRED TO	PURPOSE
1	BUS W-25	CLEAR BUFF TO 's
2	BUS X-21	ENCODE A Δ AND START TIMER
3	DEC IN	TURN DECODER ON
4	BUS a-25	PICK UP HSS 3

FUNCTION DETECTOR c		
PURPOSE: CHANNEL PARITY		
INPUT HUB WIRED FROM: UNI 18 OUT		
OUT HUB	WIRED TO	PURPOSE
1		
2	HSS 4c IN	
3		
4	HSS 4 PU	

FUNCTION DETECTOR d		
PURPOSE: ERROR		
INPUT HUB WIRED FROM: UNI 13 OUT		
OUT HUB	WIRED TO	PURPOSE
1		
2	UNI 15 IN	ACTIVATE HSCL X
3		
4	x-34	INHIBIT STEP ON EN-CODE-ENCODE ¢ SYMBOL

FUNCTION DETECTOR e		
PURPOSE: SYNCHRO TAPE		
INPUT HUB WIRED FROM: LSS 6d S		
OUT HUB	WIRED TO	PURPOSE
1		
2	BUS w-30	SET PD TO 5
3		
4		

FUNCTION DETECTOR f		
PURPOSE: TIME OUT ERROR		
INPUT HUB WIRED FROM: ALT SW F C		
OUT HUB	WIRED TO	PURPOSE
1	LOCK OUT I/O 2X	COORDINATE B 32
2	ENC 1-17	ENCODE (.)
3	HSCL Z	ACTIVATE HSCL Z
4	UNI K IN	ACTIVATE END OF MESSAGE BUS

FUNCTION DETECTOR g		
PURPOSE: CHANNEL PARITY ERROR		
INPUT HUB WIRED FROM: AND 4 OUT		
OUT HUB	WIRED TO	PURPOSE
1	BUS h-28	ENCODE A + AND ACTIVATE HSCL X
2		
3		
4		

FUNCTION DETECTOR h		
PURPOSE: REMARKS		
INPUT HUB WIRED FROM: HSS 1d S		
OUT HUB	WIRED TO	PURPOSE
1		
2	BUS F-6	SET WAK TO 7 SET CAK TO 11
3	UNI H IN	OUTPUT START
4		

T & F UNIT - UNIBUS, "AND", WIRING

PROGRAM: FAA INPUT MESSAGE

UNIBUSES							
UNIBUS	INPUT HUBS WIRED FROM					OUT PUT HUB WIRED TO	PURPOSE
1	DEC II-4	BUS W-25	BUS X-21			ENC I-1	ENCODE △
2	BUS w-30	BUS h-14				SET PDC 4	SET PDC 4
3	DEC I-4	DEC II-8	BUS 1-34	BUS X-24	UNI D OUT	INV 3 IN	CHECK FOR△
4	PD 108	PD 119				HSS 1c IN	CHECK FOR△
5	BUS w-20	BUS h-7	HSS 3b S	BUS F-5		BUS d-23	OUT OF PLACE ≡
6	DEC II-14	BUS F-24				FD a IN	
7	BUS F-8	BUS N-26				CAK 6	SET CAK 6
8	PD 12	PD 14	PD 23	PD 29	UNI 9 OUT	AND 3 IN	CHECK FOR△
9	BUS F-12	BUS F-24	PD 42	HSS 1cNS		UNI 8 IN	CHECK FOR△
10		BUS 1-1	DEC I-2			INV 2 IN	BEGINNING OF MESSAGE
11	LSS 6d NS	BUS F-5	BUS F-8	BUS F-9	UNI-17 OUT	UNI 12 IN	STEP ON DECODE
12	UNI 11OUT	BUS F-12	BUS F-23	PD 4	BUS N-26	BUS e-28	STEP ON DECODE
13	HSS 4b NS	ODD CHARACTER PARITY		LSS 7b NS	AND 3 OUT	FD d IN	ERROR FD
14	BUS u-2	HSS 2a S				OUTPUT 1	REMARKS
15	UNI E OUT	FD d2	BUS h-28	PD 132		HSCL X	HSCL X
16	LSS 7c NS	DEC II-18	DEC II-25	DEC II-15		HSS 4b IN	INVALID CHAR.
17				BUS F-10	LSS 10a NS	UNI-11 IN	STEP ON DECODE
18	BUS b-14	LSS 7a NS				FD c IN	CHAN. PAR. CHECK
19							
20	PD 6	PD 5	PD 3			BUS h-7	BEGINNING OF MESSAGE

T & F UNIT - UNIBUS, "AND", WIRING (CONTINUED)

PROGRAM: FAA INPUT MESSAGE

"AND"				
"AND"	INPUT HUBS WIRED FROM		OUTPUT HUB WIRED TO	PURPOSE
1	BUS h-7	INV 2 OUT	LSS 7b C	BEGINNING OF MESSAGE
2	INV 4OUT	CPR-OUT	HSS 3 D.O.	INHIBIT D.O. OF HSS 3 WITH ENCODING OF ¢ CHARACTER
3	UNI 8 OUT	INV 3 OUT	UNI 13 IN	FIELD LENGTH
4	BUS b-14	CPR-NC	FD G IN	CHANNEL PARITY
5	BUS w-20	BUS 1-34	HSS 3d IN	D.O.HSS4 WITH LETTERS CHARACTER FOLLOWING CH. CHECK CHAR.
6	BUS v-30	INV 5 OUT	LSS 6b C	OUT OF PLACE ≡
7				
8				

UNIBUS					
	IN	IN	IN	OUT	PURPOSE
L	BUS d-23	BUS X-24		INV 5-IN	INHIBIT OUT OF PLACE ≡ CHECK
K	FD f4	HSS 3a S		BUS F-27	END OF MESSAGE
J	BUS F-10	BUS F-23		WAK 3	SET WAK TO 3
I	BUS F-10	BUS F-9		CAK 4	SET CAK 4
H	FD h3	BUS F-25		FI-2	OUTPUT START
G	HSS 1a S	PD 132		FI-1	OUTPUT STOP
F	LSS 6b NS	LSS 6c NS		BUS d-24	
E	BUS N-24	BUS d-24		UNI-15 IN	MESSAGE VOID
D	BUS v-30	BUS F-7	DECII-12	UNI 3 IN	CHECK FOR SPACE

T & F BUSSES

PROGRAM: FAA INPUT MESSAGE

BUS	HUB	WIRED TO	PURPOSE
x-1	x-1	PD 2	PD 2
	w-1	DEC IN 64	
	v-1	INV 7 IN	
	u-1	FD b IN	
u-2	u-2	HSS 1b S	REMARKS
	u-3	UNI 14 IN	
	u-4	HSS 2 PU	
	u-5	SET PD W4	
	u-6	SET PD W1	
w-20	w-20	AND 5 IN	
	w-21	UNI 5 IN	
	v-18	CPR IN	
	v-19		
	v-20	HSS 2 DO	
	v-21	HSS 4d IN	
v-30	v-30	UNI D IN	
	v-31	DEC II-2	
	v-32	AND 6 IN	
	v-33		
u-30	u-30		
	u-31		
	u-32		
	u-33		
1-1	1-1		LETTERS
	k-1	DEC I-31	
	j-1	2FD a2	

BUS	HUB	WIRED TO	PURPOSE
i-1	i-1	UNI 10 IN	
1-34	1-34	AND 5 IN	LETTERS
	k-34	UNI 3 IN	
	j-34	DEC II-31	
	i-34	IN PREC LC	
h-7	h-7		B.O.M.
	g-7		
	f-7	UNI 5 IN	
	e-7	UNI 20 OUT	
	d-7	AND 1 IN	
h-13	h-13	FD a2	SET PD
	g-13	BUS h-14	WITH TS
	f-13	SET PD C2	
	e-13	SET PD W2	
h-14	h-14	HSS 1b IN	SET PD
	g-14	BUS h-13	WITH TS
	f-14	UNI 2 IN	
	e-14		
h-20	h-20		TS
	g-20	FI #7	
	f-20	FI #3	
	e-20	FD a1	
h-21	j-21		
	g-21		
	f-21		
	e-21		

T & F BUSSES (CONTINUED)

PROGRAM: FAA INPUT MESSAGE

BUS	HUB	WIRED TO	PURPOSE
h-28	h-28	ENC II-19	ENCODE
	g-28	UNI 15 IN	HSCL X
	f-28	FD g1	
e-28	e-28	UNI 12 OUT	STEP ON DECODE
	d-28	INV 1 IN	
	c-28	PD STEP IN 1	
b-14	b-14	BUS X-24	CHAN. PAR.
	b-15	HSS 3b NS	
	b-16	UNCONDITI-ONAL DELETE	
	b-17	AND 4 IN	
	b-18	UNI 18 IN	
b-19	b-19	HSCL Y	REMARKS
	b-20	HSS 1 PU	
	b-21	DEC II-14	
	b-23		
a-20	a-20	HSS 5a S	
	a-21	HSS 5c NS	
	a-22	DEC IN 0-32	
d-23	d-23	UNI-5 OUT	CPR ACT
	c-23	CPR-ACT	
	b-23	UNI-L IN	
	a-23		
d-24	d-24	UNI-F OUT	TRANS-MITTED
	e-24	UNI-E IN	ERRORS
	b-24	ENC II-18	
	a-24		

BUS	HUB	WIRED TO	PURPOSE
b-25	b-25	DEC III-15	SYNCHRO
	b-26	HSS 5 PU	
	b-27	LSS 6 PU	
	b-28	LSS 7 PU	
a-25	a-25	BUS F-7	
	a-26	HSS 3 PU	
	a-27	FD b4	
	a-28	2FD h2	
x-34	x-34	FD d4	
	w-34	ENC I-30	ENCODE ¢SYMBOL
	v-34	PD STEP IN 4	INHIBIT STEP ON
	u-34	INV 4 IN	ENCODE
w-30	w-30	FD e2	SET PD TO 6
	w-31	UNI 2 IN	
	w-32	SET PD C 1	
	w-33		
u-30	u-30	FD a4	
	u-31	PULSS 9	
	u-32	PULSS 8	

T & F BUSSES

PROGRAM: FAA INPUT MESSAGE

BUS	HUB	WIRED TO	PURPOSE
X-21	X-21	FD b2	
	X-22	UNI-1 IN	
	X-23	START TIMER	
X-24	X-24	BUS b-14	CHAN. PAR.
	X-25	UNI-L IN	
	X-26	UNI-3 IN	
X-27	X-27	HSS 5b S	SYN VS TTY
	X-28	HSS 5d NS	
	X-29	DEC IN 32	
W-25	W-25	FI #8	BUFFER CLEAR
	W-26	FD b1	
	W-27		
	W-28	UNI 1 IN	
	W-29	HSS 1a NS	
F-5	F-5	PD 2	PD 2
	E-5	PN LSS 10	
	D-5	UNI 11 IN	
	C-5	UNI 5 IN	
F-6	F-6	CAK 11	REMARKS
	E-6	WAK 7	
	D-6	FD h2	
	C-6		
F-7	F-7	BUS a-25	
	E-7	DEC II-27	
	D-7	HSS 4c S	
	C-7	UNI D IN	

BUS	HUB	WIRED TO	PURPOSE
F-8	F-8	PD 14	PD 14
	E-8	WAK 1	
	D-8	UNI 11 IN	
	C-8	UNI 7 IN	
F-9	F-9	UNI I IN	PD 23
	E-9	PD 23	
	D-9	UNI 11 IN	
	C-9	WAK 5	
F-10	F-10	UNI I IN	PD 29
	E-10	UNI 17 IN	
	D-10	PD 29	
	C-10	UNI J IN	
F-11	F-11	LSS 8a NS	PD 35
	E-11	BUS F-12	
	D-11	WAK 4	
	C-11	CAK 5	
F-12	F-12		
	E-12	BUS F-11	
	D-12	UNI 12 IN	
	C-12	UNI 9 IN	
F-23	F-23	LSS 8b NS	PD 42
	E-23	UNI J IN	
	D-23	UNI 12 IN	
	C-23	CAK 7	

T & F BUSSES (CONTINUED)

PROGRAM: FAA INPUT MESSAGE

BUS	HUB	WIRED TO	PURPOSE
F-24	F-24	UNI 6 IN	PD 48
	E-24	LSS 8c NS	
	D-24	UNI 9 IN	
	C-24		
F-25	F-25	BUS F-26	E.O.M.
	E-25	LSS 6 DO	
	D-25	UNI H IN	
	C-25	INHIB OUT-PUT STOP	
F-26	F-26	BUS F-25	E.O.M
	E-26	HSS 5 DO	
	D-26	I/O COMM 2W	
	C-26	BUS F-27	
F-27	F-27	BUS F-28	E.O.M
	E-27	T.O. CLR	
	D-27	UNI-K OUT	
	C-27	BUS F-26	
F-28	F-28	BUS F-27	E.O.M.
	E-28	LSS 8 DO	
	D-28	HSS 1 DO	
	C-28	BUS F-29	
F-29	F-29	BUS F-30	E.O.M.
	E-29	FI 6	
	D-29	T.O. END	
	C-29	BUS F-28	

BUS	HUB	WIRED TO	PURPOSE
F-30	F-30	BUS F-29	E.O.M.
	E-30	LSS 7 D.O.	
	D-30	IN PREC. IN LC	
	C-30	BUS N-29	
N-24	N-24	BUS N-25	
	M-24	LSS 7c S	
	L-24	UNI E IN	
N-25	N-25	BUS N-24	
	M-25	2FD b1	
	L-25	ENC I-13	
N-26	N-26	BUS N-27	SET WAK
	M-26	UNI-12 IN	AND CAK
	L-26	UNI 7 IN	TO 0-6
N-27	N-27	BUS N-26	AT PD 6
	M-27	WAK "O"	AND STEP
	L-27	PD 6	ON DEC-ODE
N-28	N-28	LSS 9c NS	
	M-28		
	L-28	WAK 6	
N-29	N-29	DO LSS 10	
	M-29	BUS F-30	
	L-29	DO Lss 9	

T & F UNIT - PROGRAM DIST. & ADDRESS WIRING

PROGRAM: FAA INPUT MESSAGE

PROGRAM DISTRIBUTOR OUT		
HUB	WIRED TO	PURPOSE
1	LSS 10a C	
2	BUS x-1 BUS F-5	
3	LSS 6d C UNI 20 IN	
4	UNI 12 IN PD 5	
5	UNI 20 IN PD 4	
6	BUS N-27 UNI-20 IN	
7		
12	UNI 8 IN	
14	BUS F-8 UNI 8 IN	
23	BUS F-9 UNI 8 IN	
29	BUS F-10 UNI 8 IN	
35	LSS 8a C	
42	LSS 8b C UNI 9 IN	
47	LSS 9d C	
48	LSS 8c C	
53	PD 86	
64	PD 75	
75	PD 64 PD 130	
86	PD 53 PD 97	
91	HSS 1d IN	
97	PD 86 PD 108	
108	PD 97 UNI 4 IN	
119	UNI 4 IN PD 130	
130	PD 75 PD 119	
132	UNI 15 IN UNI G IN	

MOD 12 PDK OUT		
HUB	WIRED TO	PURPOSE

PD STEP IN		
HUB		WIRED FROM
1.	STEP -DECODE	BUS e-28
2.	VOID STEP-DECODE	
3.	STEP ENCODE	INV 1 OUT
4.	VOID STEP-ENCODE	BUS x-34

SET IN CHAR. ADD	
HUB	WIRED FROM
11	BUS F-6
10	
9	
8	
7	BUS F-23
6	UNI 7 OUT
5	BUS F-11
4	UNI I OUT
3	
2	
1	
S	

SET IN WORD ADD	
HUB	WIRED FROM
0	BUS N-27
1	BUS F-8
2	BUS F-9
3	UNI J OUT
4	BUS F-11
5	
6	BUS L-28
7	BUS F-6
8	
9	

SET PD. CHAR. IN	
HUB	WIRED FROM
8	
4	UNI 2 OUT
2	BUS h-13
1	BUS w-30

SET PD WORD IN	
HUB	WIRED FROM
8	
4	BUS u-2
2	BUS h-13
1	BUS u-2

T & F UNIT - FUNCTION WIRING

PROGRAM: FAA INPUT MESSAGE

FILL					
FILL	INHIBIT HUB WIRED FROM	START HUBS WIRED FROM	END HUBS WIRED FROM	OUT HUBS WIRED TO	PURPOSE
a					
b					
c					
d					

FUNCTION INPUTS		
FUNCTION	INPUT HUB WIRED FROM	INHIBIT HUB WIRED FROM
1. OUTPUT STP	UNI G OUT	BUS F-25
2. OUTPUT START	UNI H OUT	
3. INPUT STOP	BUS h-20	
4. CORRECTION		
5. VOID		
6. END OF DATA	BUS F-29	
7. TRACK SWITCH	BUS h-20	
8. BUFFER CLEAR	BUS W-25	
9. WORD CLEAR		
10. STOP		
11. STOP		

INVERTERS			
INV.	IN HUB WIRED FROM	OUT HUB WIRED TO	PURPOSE
1	BUS e-28	PD STEP IN 3	PD STEPPING
2	UNI 10 OUT	AND 1 IN	BEGINNING OF MESSAGE
3	UNI 3 OUT	AND 3 IN	CHECK FOR SPACE
4	BUS x-34	AND 2 IN	
5	UNI-L OUT	AND 6 IN	OUT OF PLACE ≡
6			
7	BUS x-1	DEC IN 0-64	SS ADDRESS

STOP OUTPUT	
WIRED TO	PURPOSE

DECODER OUT	
WIRED TO	PURPOSE

DECODER IN HUB WIRED FROM FD b3

2-CHAR. FUNC. DET a		
PURPOSE:		
IN 1 HUB WIRED FROM	IN 2 HUB WIRED FROM	OUT HUB WIRED TO
DEC I-8	BUS 1-1	HSS 3a IN

2-CHAR. FUNC. DET. b		
PURPOSE:		
IN 1 HUB WIRED FROM	IN 2 HUB WIRED FROM	OUT HUB WIRED TO
BUS N-25	BUS a-25	HSCL W

T & F UNIT - MISCELLANEOUS CONTROL WIRING

PROGRAM: FAA INPUT MESSAGE

CH. PAR. REG. INPUT	
HUB	WIRED FROM
1	IN BUFF 1
2	IN BUFF 2
4	IN BUFF 4
8	IN BUFF 8
16	IN BUFF 16
32	CPR OUT 32
64	CPR OUT 64
P	CPR OUT P

CH.PAR.REG.OUTPUT	
HUB	WIRED FROM
1	
2	
4	
8	
16	
32	CPR IN 32
64	CPR IN 64
P	CPR IN P

CHANNEL PARITY CONTROL		
HUB	WIRED TO/FROM	PURPOSE
ACT	BUS d-23	
ERR.		
NC	AND 4 IN	

SELECT CHARACTER PARITY		
HUB	WIRED TO/FROM	PURPOSE
ODD	UNI 13 IN	
C		
EVEN		

ADVANCE CHANNEL PAR.	
HUB	WIRED TO/FROM
IN	BUS w-20
STEP	HSS 2d NS
OUT	AND 2 IN

SELECT CHANNEL PAR.	
HUB	WIRED TO/FROM
ODD	C
C	ODD
EVEN	

COMPUTER ⟶ I/O REGISTER		
HUB	WIRED TO	PURPOSE
A-1		
A-0		
B-1		
B-0		
C-1		
C-0		
D-1		
D-0		

MODE SELECTION	
HUB	WIRED FROM
IN-1	HSS 2a NS
IN-2	HSS 2b NS
IN-3	HSS 2c NS
OUT-1	UNI 14 OUT
OUT-2	HSS 2b S
OUT-3	HSS 2c S

I/O ⟶ COMPUTER	
HUB	WIRED FROM
a	
b	
c	

T & F UNIT - MISCELLANEOUS CONTROL WIRING (CONTINUED)

PROGRAM: FAA INPUT MESSAGE

PUNCH INT'L'K		
PURPOSE		
NS HUB WIRED TO	C HUB WIRED TO	S HUB WIRED TO

MISCELLANEOUS HUBS	
HUB	WIRED FROM
FILL	
UNCONDITIONAL DELETE	BUS b-16
REVERSE HUBS	

HIGH SPEED I/O COMP	
HUB	WIRED FROM
W	2FD b OUT
X	UNI-15 OUT
Y	FD f3
Z	BUS b-19

ALTERNATE SWITCHES				
SW.	PURPOSE	HS HUB WIRED TO	C HUB WIRED FROM	S HUB WIRED TO
A				
B				
C				
D				
E				
F	TIME OUT	T.O. 1	FD f IN	

PROGRAM INDICATORS	
IND.	WIRED FROM
1	
2	
3	
4	
5	
6	

T & F UNIT

SPECIAL FAA HUBS

PROGRAM: FAA INPUT MESSAGE

TIME OUT		
HUB	WIRED TO	PURPOSE
ST	BUS X-21	
END	BUS F-29	
0		
1	ALT. SWITCH F N/S	
CL	BUS F-27	

SIM	
WIRED TO	PURPOSE

COMM. READY		
HUB	WIRED TO	PURPOSE
A SET		
B SET		
ST RDY		

I/O COMM.		
HUB	WIRED FROM	PURPOSE
2W	BUS F-26	INPUT DISCONNECT
X	FD f1	INPUT LOCKOUT
Y		
Z		
3W		
X		
Y		
Z		

APPENDIX XXI

OUTPUT TRANSLATE AND FORMAT CONTROL UNIT PLUGBOARD NARRATIVE AND WIRING CHARTS

TABLE OF CONTENTS

		Page
ABSTRACT		3
INTRODUCTION		4
DETAILED COMMENTS ON THE PROGRAM		4
I.	Substation Address	4
II.	Teletype Conditioning Codes (Diagram I)	5
III.	Setting Word and Character Address Counters with PD Outs (Diagram II)	7
IV.	Beginning of the Route (Diagram III)	7
V.	End of Route Before the Fifth Segment (Diagram IV)	9
VI.	End of Route after the Fifth Segment (Diagram V)	10
VII.	Remarks (Diagram VI)	12
VIII.	Continuation Message (Diagram VII)	12
IX.	Channel Parity Register (Diagram VIII)	13
X.	Invalid Character Error - Synchronization Error - Character Parity Error (Diagram IX)	14
WIRING DOCUMENTATION		25

LIST OF ILLUSTRATIONS

Diagram	Title	Page
I	Conditioning Codes - Beginning of Message - End of Message	16
II	Setting Word and Character Address Counters With PD Outs	17
III	Beginning of the Route	18
IV	End of Route Before the Fifth Segment	19
V	End of Route After the Fifth Segment	20
VI	Remarks	21
VII	Continuation Message	22
VIII	Channel Parity Register	23
IX	Invalid Characters - Incorrect Character Parity - Synchronization Error	24

INDEX OF TABLES

Table	Title	Page
I	Substation Addresses	5
II	Configuration of I/O Tracks Presented to the T & FC Unit	8

ABSTRACT

The Output Inter Center Message program for the High Speed Paper Tape System described on the following pages has been developed to make more extensive use of the formatting capabilities of the Paper Tape System. The format illustrated in Table II represents the arrangement of data delivered to the High Speed Paper Tape System. The product of the program is an Inter Center Message that is arranged in the standard format of input messages which is illustrated in Appendix A of Circular Letter AT 200-12. The Computer subroutine used to assemble the Inter Center Message data must first transfer Identification and Remarks data to the Input/Output track that is presented to the Translator and Format Control Unit. Data comprising the Route are transferred to the second Input/Output track. In each case, a group of three non-data characters will accompany the data transferred to each of the Input/Output tracks. These special characters cause groups of communication characters such as channel parity and end of message to be included in the Inter Center Message. The arrangement of the group of characters transferred to the first Input/Output track is always the same while the arrangement of the group transferred to the second Input/Output track varies with the presence or absence of Remarks. The methods used in processing the Enroute, Proposed, and Modification type messages by the Output Paper Tape System are alike; i. e., the data received from the Computer is transmitted in its entirety. The receipt of a Continuation type message will cause the Output Paper Tape System to pad the Speed, Fix Time, and Altitude fields with space codes.

Although the data presented to the Output Paper Tape System is laid out in a format that closely resembles the input from the High Speed Paper Tape System (See Table I of the Input Message Documentation), strict adherence to this format with regard to data information is not required although Speed, Coordinate Fix Time, and Altitude must be consecutive fields to take advantage of the "fill" feature of the Translator and Format Control Unit. Because of the above mentioned requirement and the necessity of including control characters to generate certain communication characters, this format has been designated Format A.

INTRODUCTION:

The Inter Center Message program for the Output Paper Tape System originally developed for transmitting Inter Center Messages between Computers did not make full use of the capabilities of the Output Paper Tape System because an optimum computer format was not available at that time. The Inter Center Message Program for the Output Paper Tape System described herein will reduce the computer processing time by assuming a greater portion of the formatting tasks.

DETAILED COMMENTS ON THE PROGRAM:

The detailed description of the methods used in the Inter Center Message Program for the Output Paper Tape System is described in detail in the following pages. The description has been divided into sections for ease in understanding. Sections which refer to diagrams will have the number of the diagram to which they refer notated immediately after the heading of the program area described.

I. Substation Address:

The first character (I/O track position 120 or Word 0 Character 11) of the Output Message to be received by the Output T & FC Unit is a substation address. (See Table II - Configuration of the I/O Tracks presented to the T & FC Unit). The Output Distributor, upon receipt of the substation address, sequentially scans each output position until the station requested is found. When the proper substation is found, communication between the found substation and the T & FC Unit is established.

Substation addresses in storage (computer) are assumed to be alphabetic. The Univac character, used to address a particular substation, must be translated to the teletype character that has a binary sum of levels 1 through 4 equal to the substation number desired. For example: the letter E, in teletype, is made up of a punch in level 1 (2^0) and no punches in levels 2 through 4. E therefore, has a binary value of 1. Since a Univac E is translated to a teletype E (see Decoder Group I and II, Wiring Documentation), it may be used to address substation 1. Likewise, a teletype D has a binary value of 9 for levels 1 through 4, i. e., punches in levels 1 (2^0) and 4 (2^3) only. A Univac D which is translated as a teletype D may then be used to address output

substation 9. The table shown below summarizes the Univac alpha characters that may be used to address Output substations 1 through 16.

TABLE I

SUBSTATION ADDRESSES

Substation Address	1	2	3	4	5	6	7	8	9	10	11	12	13	14	15	16
Univac Character	E	L	A	Δ	S	I	U	O	D	R	J	N	F	C	K	T

II. Teletype Conditioning Codes (Diagram I)

A. End of Message Codes:

"End of message" codes are transmitted at the beginning and end of each message. Assuming all equipments and line linkage to be functioning normally, the "end of message" at the beginning serves no function. Should the previous message, through some transient fault in the equipments or linkage, have been interrupted, the following conditions will exist: The stunt box on the 28 RO will be in a "conditioned" state, waiting for the "end of message" codes to clear it; the punch circuitry on the read-punch module will be waiting for the "end of message" codes to cause the punching of the length of "leader" characters separating each message. The Translate and Format Control Unit will, of course, have time-out and disconnected and locked out the reader on the read-punch module.

The "end of message" codes at the beginning of a message serve to clear the system linkage to a normal state to insure that transient faults effect no more than one message.

Since PD 1 is programmed to step on encode, the PD counter will be advanced to 2 after the substation address is transferred to the Output Distributor. PD 1, through LSS 8a N/S, Enables UNI-17 to frustrate the circuit from CPR-OUT to CPR-STEP. This action prevents the toggling of the Channel Parity Register. PD 2 through LSS 10a N/S activates FD a so that figures, carriage return, and letters are encoded during the function sequence portion of the substation address character cycle. As each of these characters

are encoded, UNI-18 is enabled so that the cleared contents of the Channel Parity Register will not be disturbed. The signal from hub 4 of FD a is routed to the in of LSS 10d. Since LSS 10 is N/S, the signal is terminated at the N/S hub of pole d. If FDa is enabled after PD 13 busses F-10, 9, 8, 7, and 6, are enabled. This action drops out all selectors, enables function Input 6 (end of message) and releases the output substation currently connected to the distributor.

B. Condition Codes and Station Directing Codes:

The Station Directing Codes are made up of three characters which are used to identify the 28 Set (center) to which the output message is to be transmitted. The codes used for each center are the assigned identifier of the ARTC Centers. For example:

ZPT - Pittsburgh, ZDC - Washington, ZBW - Boston,
ZCL - Cleveland, ZNY - New York, ZID - Indianapolis,
ZAC - Atlantic City, etc.

The appropriate Station Directing Codes immediately follow the substation address (see Table II). Note that in each case the first character of the SDC codes is a Z. PD is stepped to 3 with the decoding of the Z. PD 3, through the N/S hub of LSS 10b, enables bus a-25. Bus a-25 enables Delete Character in, FD b, and INV 2 in. Enabling the in of INV 2 breaks the circuit from DEC II-28 (Z) to UNI-4. This action prevents the encoding of the letter Z at this time. The wiring to the Delete Character in hub prevents a translator error from occurring at this time. During the function sequence portion of the Z character cycle, carriage return, carriage return, letters, and Z are encoded. The codes generated from FD al, 2 and 3 are used to condition the receiving 28 Set for the receipt of the Station Directing Codes which follow. During each perform time of FD b, UNI-18 is enabled thereby preventing the toggling of the Channel Parity Register. The next two characters to appear at the Incoming Buffer Output Register are the last two characters of the Station Directing Codes. Receipt of the second SDC code advances PD to 4 and receipt of the third advances PD to 5. These PD outs which are qualified by LSS 8 b, and c, are also routed to UNI-17 and 18 to prevent the toggling of the Channel Parity Register. Advancing PD to 5 with receipt of the third SDC Character causes bus h-14 to be enabled. Enabling bus h-14 sets the word and character address counters to 8-6 and activates

FD c. FD c encodes the following beginning of message character: letters, letter, line feed, letters.

III. Setting Word and Character Address Counters with PD Outs (Diagram II)

Table II "Configuration of the I/O Tracks Presented to the T & FC Unit" shows an output message arranged in the format that is transferred from the I/O tracks to the T & FC Buffer. To arrange the identification data in a format that is compatible with the requirements of the input message, PD 5, 12, 19, 25, 30, 36, 41, etc. are stepped on Decode. This enables the Word and Character address counters to be set directly from these PD outs. The PD out that occurs at the end of each field (note that in some cases the fields are multiple) is used to set the Word and Character address counter to the first character of the next field to be transferred to output. For example: it is shown in Table II and Diagram II that PD 19, which marks the end of the Aircraft Identification field, sets WAK to 6, and CAK to 5, for receipt of the first character to the Type Aircraft field. Likewise, PD 41 which marks the end of the Altitude field and the end of the Identification portion of the ICM, sets WAK to 0 and CAK to 2. Decoding the ? character at Word 0 Character 2 activates FD d and steps PD 42. FD d1 encodes carriage return and FD d2 encodes letters. Note that enabling UNI-9 and UNI-11 (See Diagram I) to encode carriage return and letters respectively does not inhibit the toggling of the Channel Parity Register. FD d3 enables the Activate hub. Enabling this hub while in the output mode causes the contents of the Channel Parity Register to be transferred to output and clears the register to all one's. FD d 4 through bus 1-1 encodes a line feed. Enabling bus 1-1 in addition to encoding line feed inhibits the toggling of the Channel Parity Register.

The next character to be decoded is the @ character located at WAK 0 CAK 1. Decoding the @ character advances PD to 43 and enables bus b-25 which in turn encodes letters through UNI-11. Bus b-25 enables UNI-18 to inhibit the toggling of the Channel Parity Register.

IV. Beginning of the Route (Diagram III)

The next group of characters to be transferred to output after the Channel parity group (following the Identification Data) are those comprising the route. The decoding of the @ character steps the program distributor to 43. PD 43 through LSS 9a N/S enables bus F-30 so that PD 43 will step on encode. After the letters character

	11	10	9	8	7	6	5	4	3	2	1	S	
0	2 S/S	2 S	3 D	4 C	X	X	X	X	X	41 ?	42 @	%	
1	43 U	P	△	T	O	△	T	H	R	E	E	54 △	ADDRESSOR - KIND
2	55 W	O	R	D	S	△	O	F	△	R	E	66 M	AIRCRAFT IDENT
3	67 A	R	K	S	△	△	△	△	△	△	△	78 △	TYPE AIRCRAFT
4	△	36 Ø	1	1	Ø	4Ø △	△	25 Ø	2	6	Ø	29 △	ALTITUDE - SPEED
5	△	△	△	△	△	△	3Ø E	Ø	1	Ø	Ø	35 △	FIX TIME
6	△	△	△	△	△	△	19 △	D	C	7	•	24 △	
7	△	△	△	△	12 E	A	3	7	•	•	18 •	△	
8	△	△	△	△	△	5 I	N	D	•	△	1Ø N	11 △	REMARKS (36 CHAR)
9	△	△	△	△	△	△	△	△	△	△	△	△	

	11	10	9	8	7	6	5	4	3	2	1	S	
0	44 D	C	A	•	V	8	•	•	•	•	54 △	•	
1	•	•	•	V	4	2	2	•	•	65 △	M	D	
2	W	•	•	•	•	•	•	•	76 △	•	•	•	
3	•	•	•	•	•	•	•	87 △	•	•	•	•	ROUTE - THE END OF THE ROUTE IS DENOTED BY TWO SPACE CODES, IN THIS EXAMPLE THE END OF THE ROUTE IS DENOTED BY THE △ AT WORD 7 CHARACTER 7
4	•	•	•	•	•	•	98 △	•	•	•	•	•	
5	•	•	•	•	•	109 △	112 •	113 •	•	•	•	•	
6	•	•	•	•	122 △	•	•	•	•	•	•	•	
7	•	•	132 •	1-2 △	3 △	△	△	△	△	△	△	△	
8	△	△	△	△	△	△	△	△	△	△	△	△	
9	110 [? [	111 @ @	113 % $]•	△	△	△	△	△	△	△	△	△	

* IF THERE ARE NO REMARKS ?,@,%, ARE STORED IN THE HIGH ORDER POSITIONS OF WORD 9.

IF THERE ARE REMARKS ?,@,$, ARE STORED IN THE HIGH ORDER POSITIONS OF WORD 9.

TABLE II
CONFIGURATION OF THE I/O TRACKS PRESENTED TO THE T&F UNIT

has been transferred to output PD is advanced to 44. PD 44 through LSS 9a N/S also enables bus F-30 to step on encode and activate FD f at function time. FD f1 through LSS 9b N/S initiates a track switch function. The track switch function in the output mode performs the following functions:

1) Track switch
2) Transfers the data from the I/O track to the T & FC buffer
3) Clears WAK and CAK to 0-11, and,
4) Clears PD.

FD f2 through LSS 9c N/S energizes UNI-K which sets PD equal to 43. The signal from FD f3 is terminated at the N/S hub of HSS 3a and the signal from FD f4 picks up LSS 9. The result of the operation described above is that the T & FC is now prepared to receive the route information from the buffer.

V. End of Route Before the Fifth Segment (Diagram IV)

The processing of route information can end anytime after the first airway. The end of the route is determined by the presence of two consecutive space characters. This program has been designed so that a channel check group is always transferred to output after the last route segment. If there are five segments or less of route information there will be one channel check group pertaining to route information. If there are more than five segments there will be two channel check groups; one after the fifth segment and one after the last segment. The transfer of the channel check group to output is accomplished by decoding ? and @ characters from Word 9 Character positions 11 and 10 (See Table II). If this ICM contains Remarks a $ will be present in Word 9 Character 9. If no Remarks are present a % character will be present in Word 9 Character 9.

The space character decoded at the end of each segment routes a signal to Encoder I-4 and Inhibit Output Precedence via bus e-28. The signal denoting the decoding of the space character is also routed to 2FD a1 via HSS 4a N/S, HSS 5c N/S and bus N-27. If the next character to be received is also a space (this denotes the end of the route information) Hub 2 of 2FDa is enabled causing the out hub of 2FDa to emit. This signal is routed through UNI-14, LSS 9d (LSS 9 was picked up at the beginning of the route) to bus X-24 which picks up HSS 1, and HSS 3. Picking up HSS 3 causes

power to be applied to the Select hub of HSS 1a one clock period (42 u) after the pick up hub was enabled. Power through HSS 1a S enables bus u-2 and h-20. Bus h-20 routes power through HSS 4b N/S to UNCONDITIONAL DELETE. Applying power to the Unconditional Delete hub inhibits the encoding of the second space, i. e., the space that caused 2FDa to emit. Bus h-20 also activates FD g and FD f. Bus u-2 enables AND 5 and since PD 100 is not emitting AND 5 out emits a signal which is routed to PD STEP IN 3 to cause the PD that is currently emitting to step on encode. During the function sequence portion of the second space character cycle FD f and FD g emit during each perform time. FD f1, 2, and 4, perform no function. FD f3 through HSS 3a, S, HSS 2d N/S sets WAK to 9 and since HSS 5 is N/S CAK to 11. Signals from FD g1, 2, and 3, are terminated without performing any special functions. FD g4 drops out HSS 1 to remove power from the Unconditional Delete hub.

The next character to be decoded is the ? character from Character 11 of Word 9 (see Table I and Diagram II). Decoding the ? activates FDd. FDd encodes carriage return and letters from FD d1 and 2 respectively. FD d3 enables the ACTIVATE hub to unload and clear the contents of the Channel Parity Register. FD d4 encodes line feed and inhibits the stepping of the Channel Parity Register.

Decoding the @ character from Character 10 Word 9 encodes a letters character (See Diagram I) and inhibits the toggling of the channel parity register. No function detectors are enabled during the function sequence of the @ character cycle.

If the ICM does not contain Remarks a % character will be decoded from Character 9 Word 9 (See Diagram I). In this instance a signal from DEC II-29, representing the % character is routed to bus h-13 to activate FDa. During the function sequence portion of the % character cycle figures, carriage return, and letters are encoded. In each case the stepping of the Channel Parity Register is inhibited by enabling UNI-17 in. The perform 4 signal from FD a4 is routed through LSS 10D S to enable the end of message busses F-6, 7, 8, 9, and 10.

VI. End of Route after the Fifth Segment (Diagram V)

If the route information contains at least five segments, PD will be stepped to 97 with the decoding of the space marking the end of the fifth segment. To unload the channel check group onto tape, PD 97 is routed through HSS 3 c N/S to Bus N-26 to set CAK and WAK to 11-9.

Upon decoding the ? character at character 11 word 9 PD is stepped to 98. Decoding the ? also activates FD d (see Diagram II). Carriage return and letters are encoded from FD d1 and 2 respectively. FD d3 enables the ACTIVATE hub and FD d4 encodes line feed and enables UNI-17 to prevent the half adding of line feed to the contents of the Channel Parity Register. Decoding the @ character from character 10 word 9 steps the program distributor to 99. Decoding the @ character causes a letters character to be encoded (see Diagram I). In addition, UNI-18 is enabled thereby preventing the addition of letters to the contents of the Channel Parity Register. The signal from PD 99 is routed to the in of INV 3 and through the N/S hub of HSS 3d to Bus N-28. Enabling Bus N-28 picks up HSS 5 and sets WAK and CAK to 5-5 at the beginning of the next character cycle.

If there is a space at Word 5 Character 5 DEC I-1 emits through HSS 4a N/S, HSS 5c S, UNI-14, LSS 9d S, and Bus X-24, to pick up HSS 3 and HSS 1. Picking up HSS 1 routes power to HSS 1a S to activate Bus u-2 and h-20. This action deletes the space character at Word 5 Character 5 by directing power to THE UNCONDITIONAL DELETE via the N/S hub of HSS 4b. Power is also applied to the in of AND 5 but because PD is still at 100 UNI-8 is not enabled, so that PD 99 is not stepped on encode. Note that in all other instances when power is applied to bus u-2 and h-20 to re-set WAK and CAK or PD, PD must be stepped on encode. Several clock periods after HSS 1 has been picked up PD will be advanced to 100. PD 100 through HSS 3b S and UNI-1 activates FD f. The signal from FD f1 is terminated at HSS 2a N/S. The signal from FD f2 is terminated at HSS 2b N/S. FD f3 is routed through HSS 3a S, HSS 2d N/S to bus N-25. The signal at bus N-25 sets WAK to 9 and because HSS 5 is picked up CAK is set to 9.

If there is a % character at WAK 9-CAK 9 FD a is enabled to generate end of message codes and initialize the T & FC Unit. In this instance, HSS 5 is dropped out by routing PD 101 through UNI-6 to HSS 5 DO. Likewise if there is a $ character at WAK 9-CAK 9 HSS 5 will be dropped out by the signal emitted from PD 101.

If there is no space at WAK 5-CAK 5 power will not be applied to bus u-2 and h-20 hence, there will be no input to INV 4. This condition will cause INV 4 to emit a signal to enable AND 6. Since the decoding of the character at word 5 character 5 caused PD to be advanced to 100, AND 6 out will emit a signal that is directed to the drop out of HSS 5. Route processing will then continue until two

consecutive spaces are detected. The action taken by the T & FC Unit upon the detection of the two spaces will be exactly like that described in the section describing TC. C operations when the end of the route occurs before the fifth segment.

VII. Remarks (Diagram VI)

If an ICM contains Remarks, a $ character will be contained in word 9 character 9. Decoding the $ causes a signal to be emitted from DEC II-13. This signal is used to encode figures C, pickup HSS 2, HSS 4, and activate FD f. FD f1 through LSS 9b S, HSS 2a S, and UNI-L performs a track switch function. The signal from FD f2 is routed through LSS 9c S, HSS 2b S, to bus F-25. Bus F-25 resets PD to 43 and WAK and CAK to 1-11. Setting WAK and CAK to 1-11 and PD to 43 enables 36 characters of Remarks to be unloaded to tape. PD 79, which marks the encoding of the 36th Remarks character, activates UNI-D causing WAK and CAK to be reset to 0-2. Decoding the ? and @ characters from character positions 2 and 1 of word 0 unloads the channel parity groups of characters onto tape. Decoding the % character from word 0 character S activates FD a (see Diagram I). Activating FD a after PD 13 encodes the end of message groups of characters and enables the end of message group of busses to terminate the transmission.

VIII. Continuation Message (Diagram VII)

Intercenter messages exceeding eight route segments will require those segments in excess of eight to be transmitted via a continuation or X Message. The Continuation message is processed in much the same manner as the Enroute, Modification, and Proposed messages. The outstanding exceptions are that the Aircraft Speed, Coordinate Fix Time, and Altitude are erased to space characters. The Coordination Fix information is deleted altogether, i. e., the field is cleared to pad characters. The erasure of the Speed, Fix Time, and Altitude fields to spaces is accomplished by the Output T & FC Unit while the erasure of the Coordination Fix Field to pads is accomplished by the computer program.

If an X is decoded at PD 11, a signal is emitted from AND 3. This signal is routed to the pick up of LSS 7. PD 25, which denotes the end of the Type Aircraft field, enables FD e. Hub 1 of FD e initiates a FILL function. FD e2, which emits until the fill function is terminated, enables bus h-7 causing PD to be stepped on encode

during the execution of the fill function. Since the Speed, Fix Time and Altitude are consecutive, PD 30, and 36, are qualified by LSS 7. PD 40 is used to end the fill function. PD 41, which marks the end of the Altitude field, sets WAK and CAK to 0-2 to enable the unloading of the channel parity group of characters. Message processing continues as previously described in the sections dealing with route processing.

IX. Channel Parity Register (Diagram VIII)

Each time a character is encoded a signal or combinations of signals appear at Encoder Output hubs 1, 2, 4, 8, and 16. If the character was received from Encoder Group I (Alpha) no signal is present at Encoder Output hub 32. If the character at Encoder Output was received from Encoder Group II (Figures) a signal is present at Encoder Output hub 32. Hub 64 of the Encoder Output group does not have a signal present during the encoding of Flight Plan information. If the number of signals present at Encoder Output hubs, 1 through 64 is even, a signal will be present at Encoder Output Par. No signal will be present at the Par Hub if the count is already odd. Although levels 1 through 16 are the only levels transmitted over the teletype lines, levels 32 and Parity must be punched in the output tape because they are included in the parity count and the Output Reader at the addressed substation checks each character for proper parity prior to transmission.

Each character punched in the Output Paper tape is half-added or tallied to the contents of the Channel Parity Register as shown by the wiring of encoder Output hubs to Channel Parity Register Input hubs. The result of the tally is that a character is generated that will reflect odd parity for each of the five tape channels. The Channel Parity Character, upon being received at the Output Reader, is also checked for proper parity. It, therefore, must also have correct character parity. Correct parity for the Channel Parity Character is accomplished by wiring the parity level of Encoder Output through an Inverter to the Parity level in the Channel Parity Register Input. The principle upon which this wiring is based is that an even number when added to an odd channel parity as shown on line one below, and the letter A (teletype) is half-added to its content the result shown on line 3 has even parity. If the contents of the register were transferred to output the incorrect parity of the Channel Parity Character would be detected at the Output Reader and Operations would be stopped by the error condition.

Levels	P	32	16	8	4	2	1	
Parity Register	1	1	1	1	1	1	1	ODD
Teletype A in Encoder Output	1	0	0	0	0	1	1	/ODD
Parity Register	0	1	1	1	1	0	0	EVEN

If the parity level of the Encoder Output is inverted prior to the tally, the Parity of the Channel Parity Character is correct.

Levels	P	32	16	8	4	2	1	
Parity Register	1	1	1	1	1	1	1	ODD
Teletype A in Encoder Output	0	0	0	0	0	1	1	/EVEN
Parity Register	1	1	1	1	1	0	0	ODD

X. Invalid Character Error - Synchronization Error - Character Parity Error (Diagram IX)

The transfer of a parity incorrect character from the computer to the T & FD Unit Incoming-Buffer-Output will cause an error signal to be emitted from the Character Parity - Odd hub.

The rate at which characters are transferred from the UFC Drum to the T & FC buffer is governed by timing signals from the High Speed Drum. If the buffer and the drum should get out of synchronization anytime during the transfer of information from the drum to buffer, the buffer address is cleared and the message from the drum is re-read. If the synchronization error occurs on the second read the buffer address is cleared and the flag character (¢) is inserted at an address that has been defined by pinboard wiring. The buffer content is then available for transfer to the T & FC. When the cent character identifying this as an erroneous message is received by the T & FC, a signal will be emitted from Decoder I hub 30.

The two above mentioned error signals or any signal resulting from the receipt of an Invalid character are routed to the in of Function Detector h through Unibus 15. At Perform 1 time of the error character cycle a line feed character is encoded. At Perform 2 time an E is encoded and at Perform 3 time a Bell character is

encoded. Hub 4 of Function Detector h is to activate High Speed Control Line W. The next time the Output T & FC is demanded, the high speed control line is used to re-initiate the transmission of the message and call for a type out of the output error notification message. Both 28 Sets, the Output set transmitting the message and the Input 28 Set at the center receiving the message, will line feed, print an E, and ring the 28 Set bells providing a visual and audible error indication.

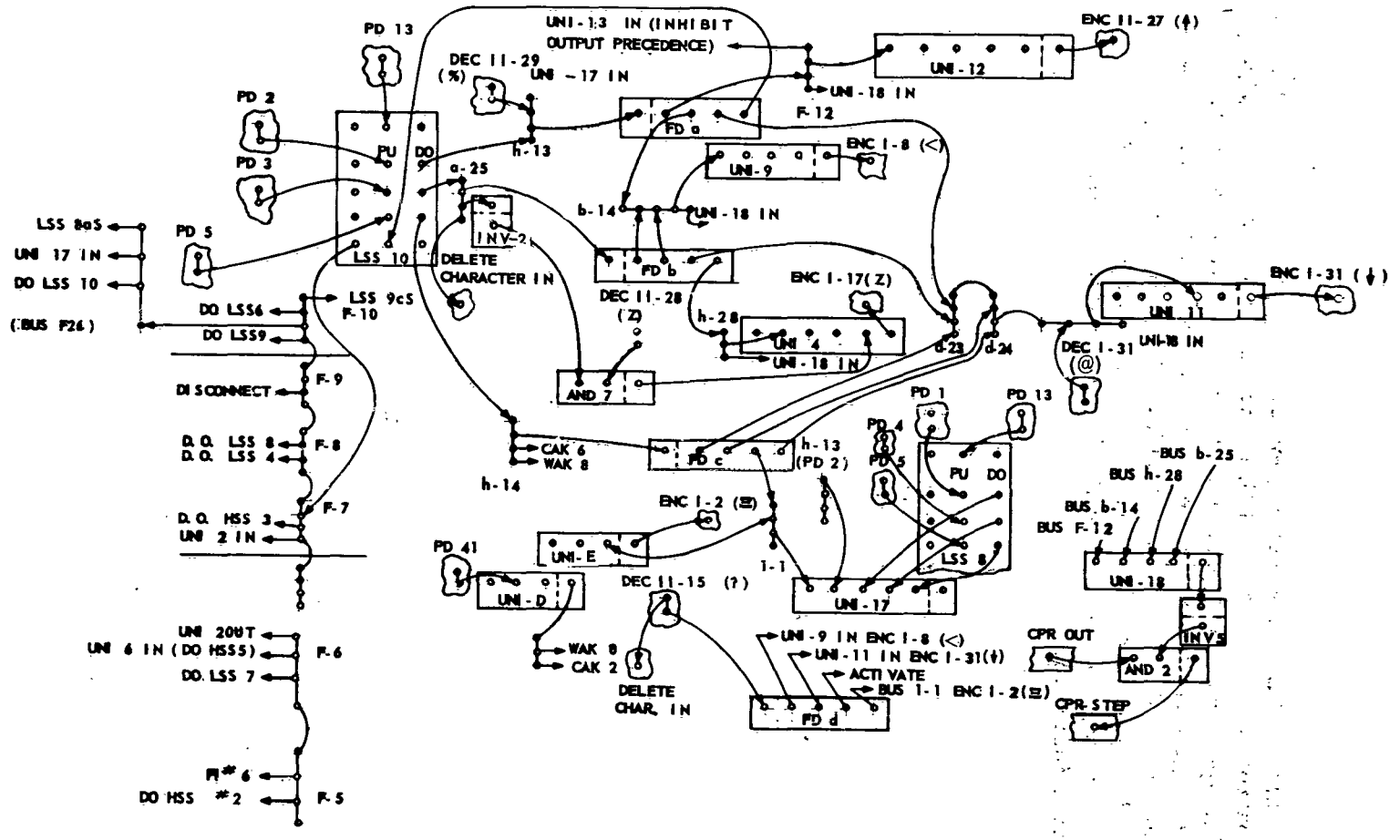

DIAGRAM I CONDITIONING CODES - BEGINNING OF MESSAGE - END OF MESSAGE

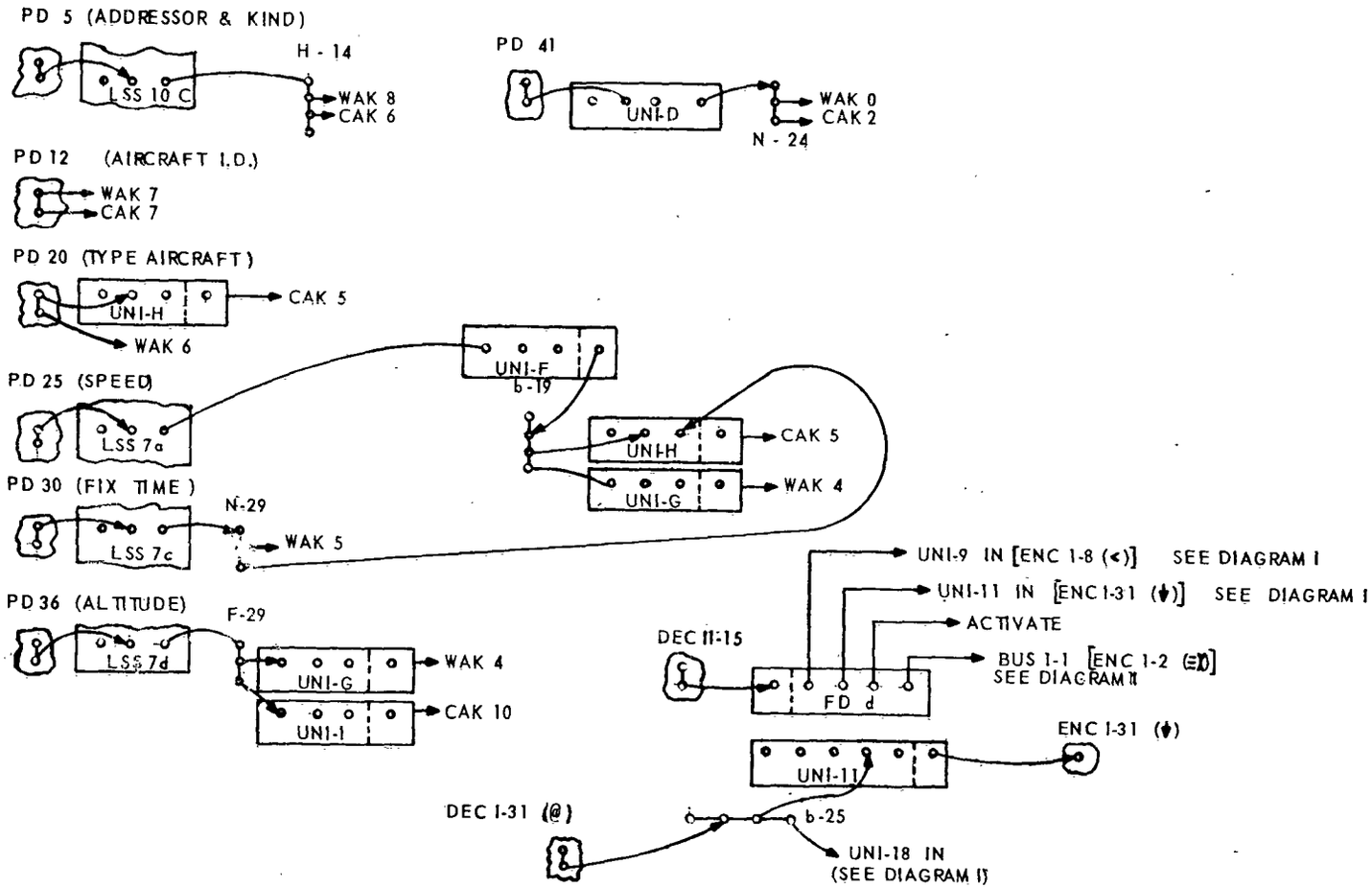

DIAGRAM II SETTING WORD AND CHARACTER ADDRESS COUNTERS WITH PD OUTS

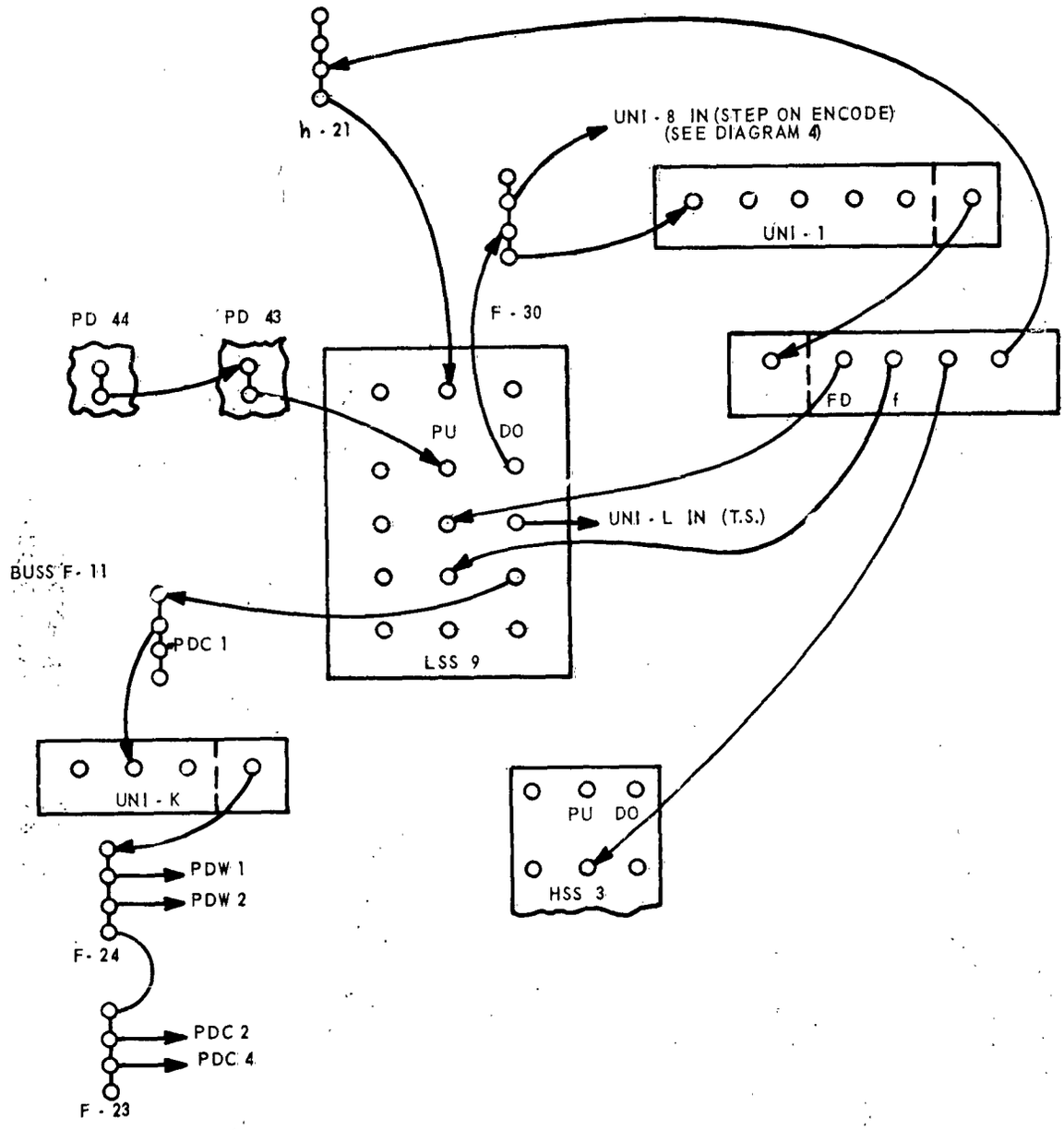

DIAGRAM III BEGINNING OF THE ROUTE

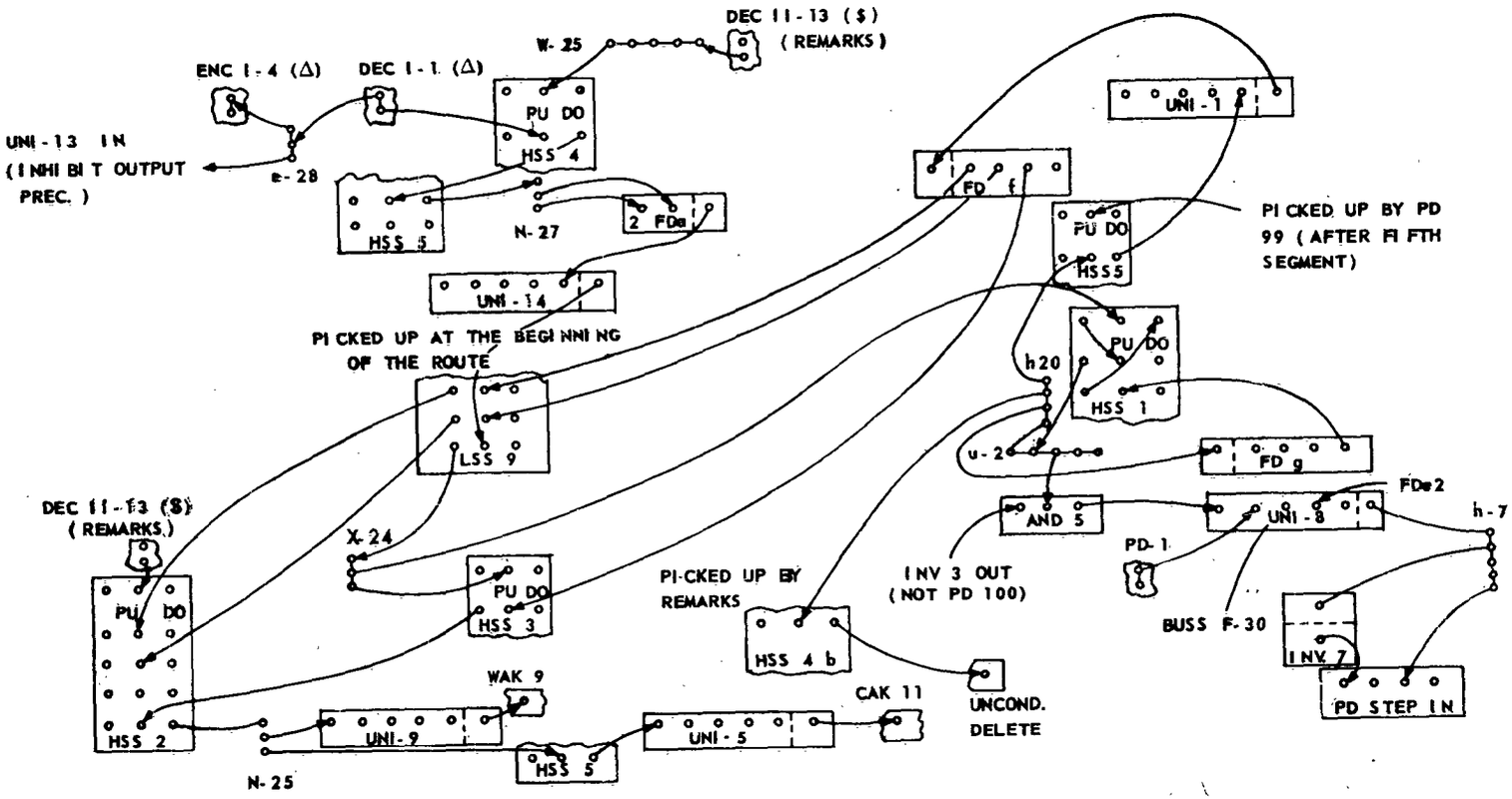

DIAGRAM IV END OF ROUTE BEFORE THE FIFTH SEGMENT

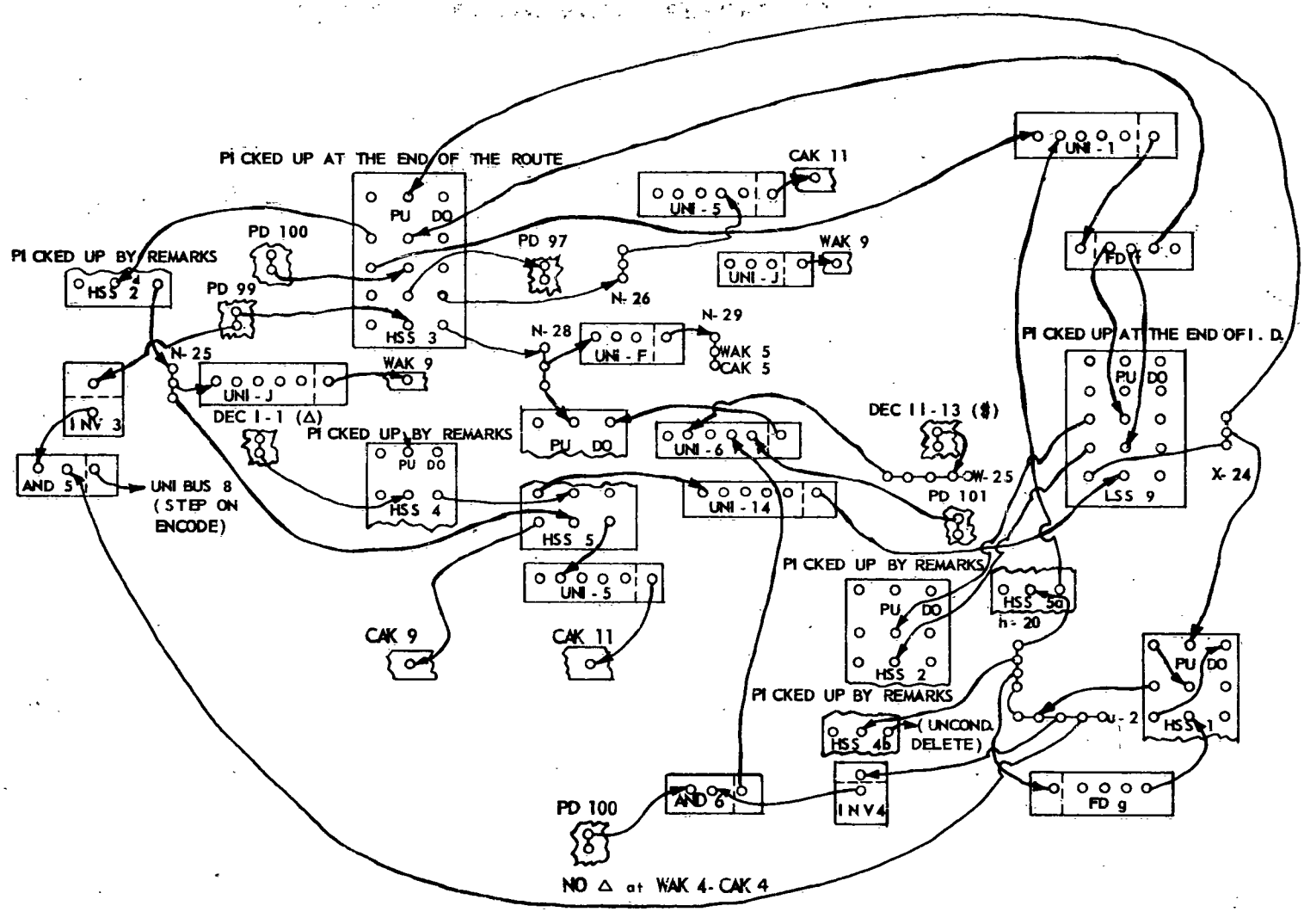

DIAGRAM V END OF ROUTE AFTER THE FIFTH SEGMENT

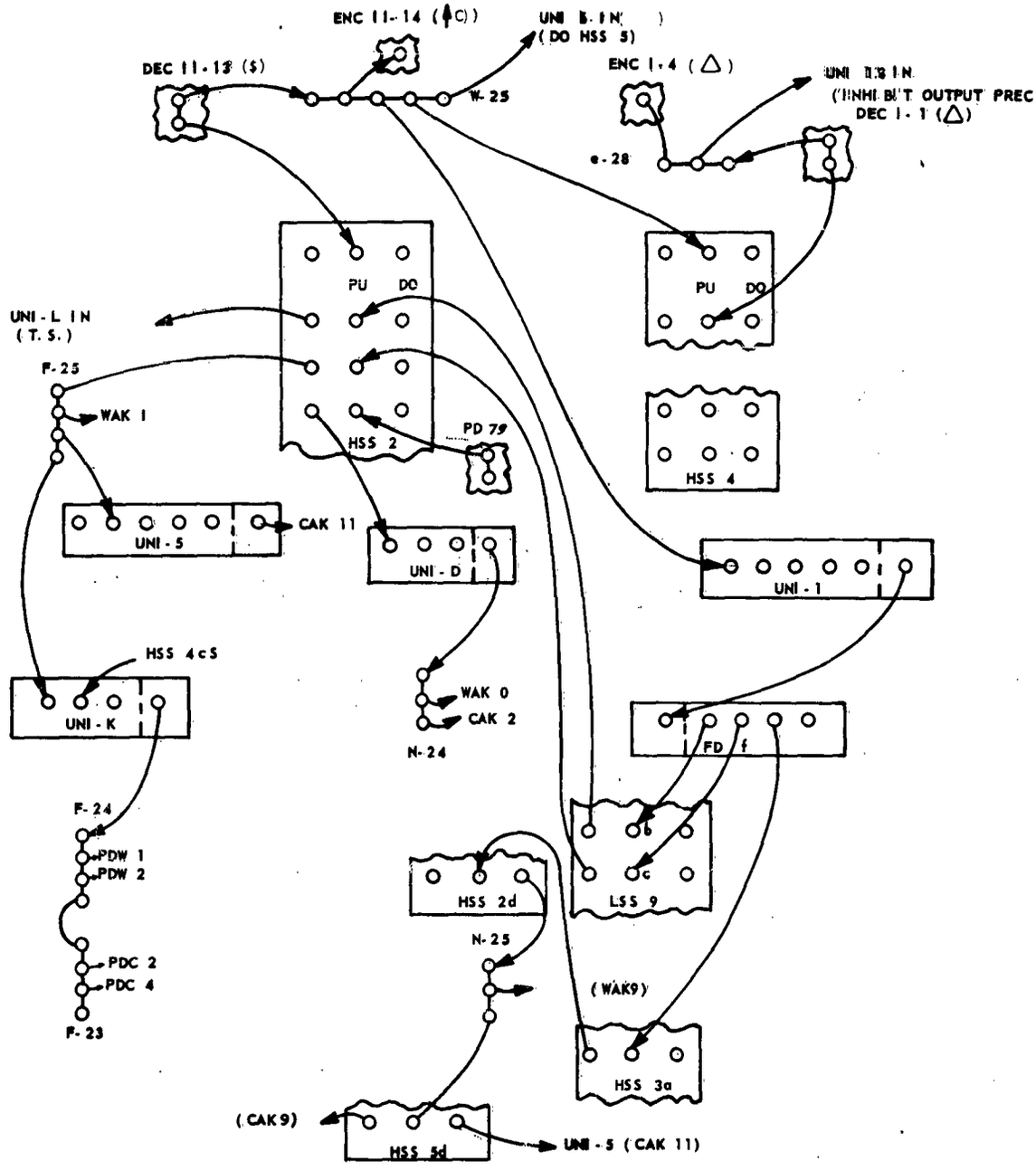

DIAGRAM VI REMARKS

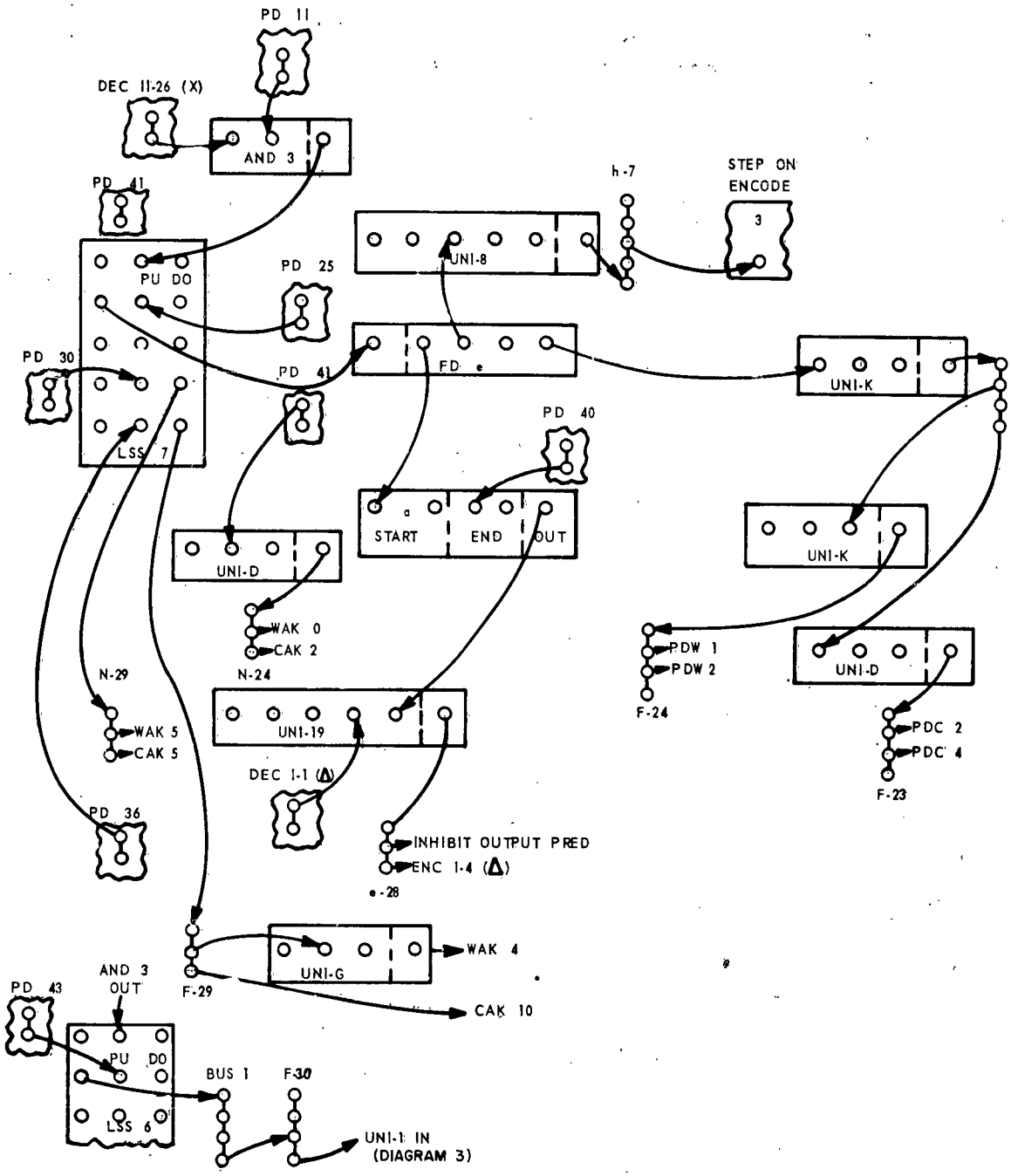

DIAGRAM VII CONTINUATION

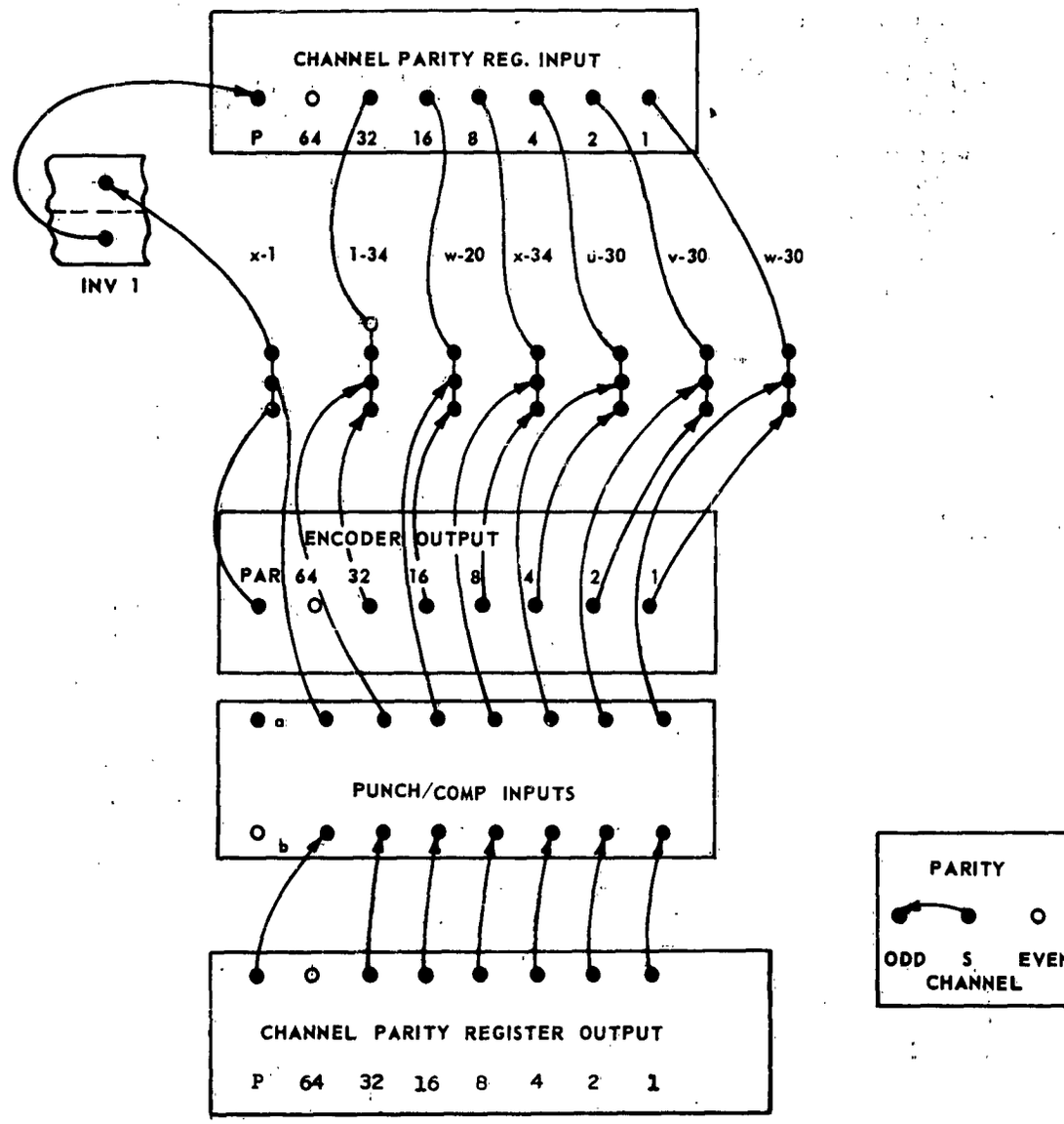

DIAGRAM VIII CHANNEL PARITY REGISTER

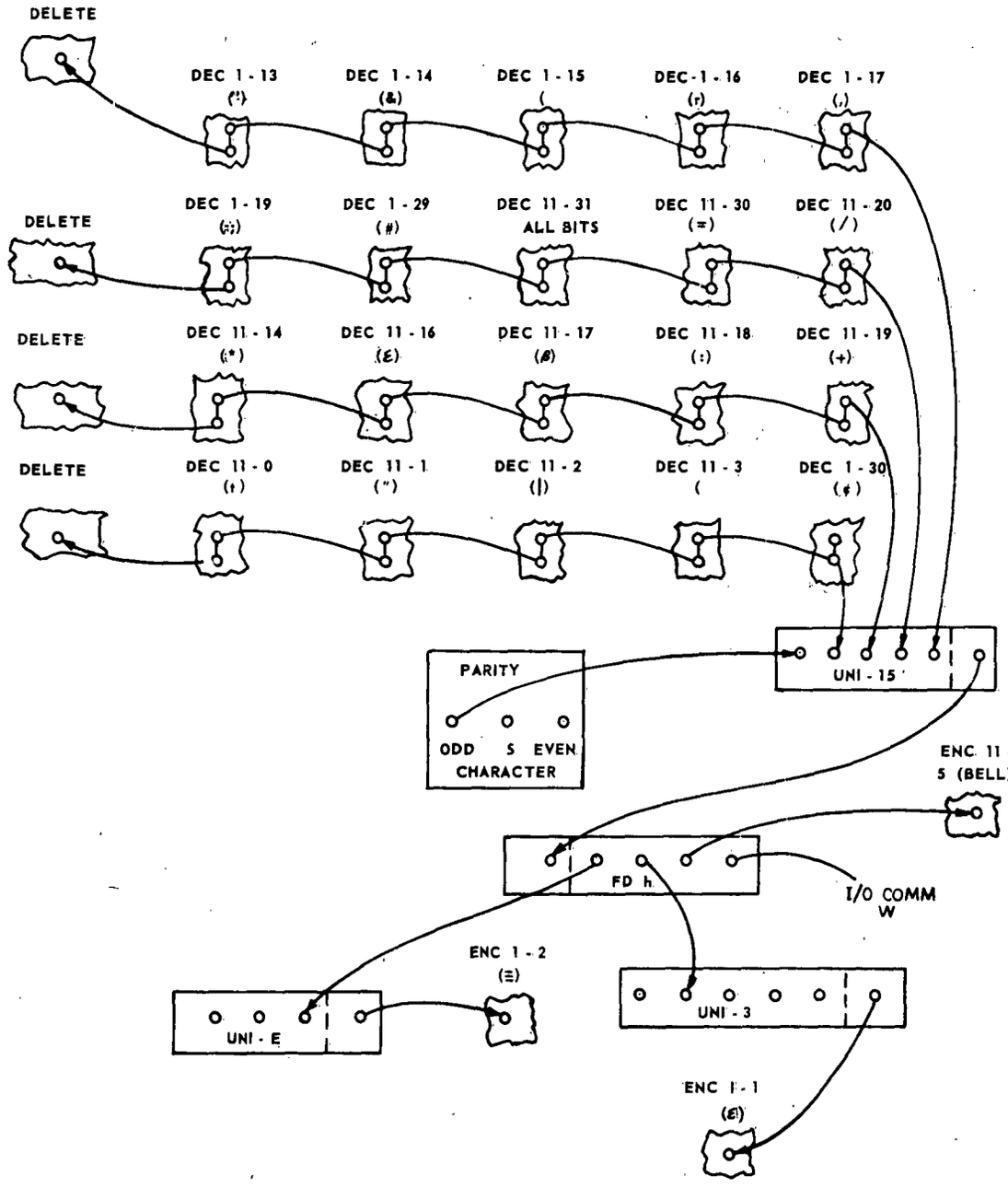

DIAGRAM IX INVALID CHARACTERS - INCORRECT CHARACTER PARITY - SYNCHRONIZATION ERROR

WIRING DOCUMENTATION:

This section contains the instructions which are to be followed in wiring the Inter Center Message Board for the Output Paper Tape System. Great care should be exercised in wiring the board and each wire should be back checked, i. e., if DEC I-11 is wired to ENC II-6, hub 6 of ENC II should be checked to be sure it is wired to DEC I-11. The abbreviations used are consistent with those shown in the bulletin "Tabulation Abbreviations of T & F Plugboard" dated July 15, 1959.

T & F UNIT - DECODER WIRING

Date: January 24, 1961

Program: Output Format A

DECODER OUTPUT, GP. I CODE			
HUB	WIRED TO	CHAR.	PURPOSE
0	DELETE	1	
1	UNI-19 IN IN HSS 4a	△	
2	ENC II-29	-	
3	ENC II-22	ø	
4	ENC II-23	1	
5	ENC II-19	2	
6	ENC II-1	3	
7	ENC II-10	4	
8	ENC II-16	5	
9	ENC II-21	6	
10	ENC II-7	7	
11	ENC II-6	8	
12	ENC II-24	9	
13	DELETE DEC I-14	'	INVALID
14	DEC I-13 DEC I-15	&	INVALID
15	DEC I-14 DEC I-16	(	INVALID
16	DEC I-15 DEC I-17	r	INVALID
17	DEC I-16 UNI-15 IN	.	INVALID
18	ENC II-28	.	PAD
19	DELETE DEC I-29	:	INVALID
20	ENC I-3	A	
21	ENC I-25	B	
22	ENC I-14	C	
23	ENC I-9	D	
24	UNI-3 IN	E	
25	ENC I-13	F	
26	ENC I-26	G	

DECODER OUTPUT, GP. II CODE			
HUB	WIRED TO	CHAR.	PURPOSE
0	DELETE DEC II-1	t	INVALID
1	DEC II-0 DEC II-2	"	INVALID
2	DEC II-1 DEC II-3	|	INVALID
3	DEC II-2 DEC I-30	)	
4	ENC I-11	J	
5	ENC I-15	K	
6	ENC I-18	L	
7	ENC I-28	M	
8	ENC I-12	N	
9	ENC I-24	O	
10	ENC I-22	P	
11	ENC I-23	Q	
12	ENC I-10	R	
13	P.U. HSS 2 BUS W-25	$	
14	DELETE DEC II-16	*	INVALID
15	DELETE FDdIN	?	
16	DEC II-14 DEC II-17	Σ	INVALID
17	DEC II-16 DEC II-18	β	INVALID
18	DEC II-17 DEC II-19	;	INVALID
19	DEC II-18 UNI-15 IN	+	INVALID
20	UNI-15 IN DEC II-30	/	INVALID
21	ENC I-5	S	
22	ENC I-16	T	
23	ENC I-7	U	
24	ENC I-30	V	
25	ENC I-19	W	
26	ENC I-29 AND 3 IN	X	

T & F UNIT - DECODER WIRING (Con't)

Date: January 24, 1961

Program: Output Format A

DECODER OUTPUT, GP. I CODE			
HUB	WIRED TO	CHAR.	PURPOSE
27	ENC I-20	H	
28	ENC I-6	I	
29	DEC I-19 DEC II-31	#	INVALID
30	DEC II-3 UNI-15 IN	¢	SYNC,ERROR
31	~~DELETE~~ BUS b-25	●	

DECODER OUTPUT, GP. II CODE			
HUB	WIRED TO	CHAR.	PURPOSE
27	ENC I-21	Y	
28	AND 7 IN	Z	
29	DELETE BUS h-13	%	
30	DEC II-20 DEC II-31	-	INVALID
31	DEC II-30 DEC I-29	All Bits	INVALID

Date: January 24, 1961

T & F UNIT - ENCODER WIRING

Program: Output Format A

ENC. INPUT. GP I			ENC. INPUT. GP. II			ENC. INPUT GP. III			ENC. INPUT. GP. IV		
HUB	WIRED FROM	CHAR.	HUB	WIRED FROM	CHAR	HUB	WIRED FROM	CHAR	HUB	WIRED FROM	CHAR
0			0			0			0		
1	UNI-3 OUT	E	1	DEC I-6	3	1			1		
2	UNI-E Out	≡	2		≡	2			2		
3	DEC I-20	A	3		↑	3			3		
4	BUS e-28	Δ	4		Δ	4			4		
5	DEC II-21	S	5	FD h 3	BELL	5			5		
6	DEC I-28	I	6	DEC I-11	8	6			6		
7	DEC II-23	U	7	DEC I-10	7	7			7		
8	UNI-9 OUT	<	8		<	8			8		
9	DEC I-23	D	9		↗	9			9		
10	DEC II-12	R	10	DEC I-7	4	10			10		
11	DEC II-4	J	11		↙	11			11		
12	DEC II-8	N	12		⦶	12			12		
13	DEC I-25	F	13		→	13			13		
14	DEC I-22	C	14	BUS W-25	0	14			14		
15	DEC II-5	K	15		←	15			15		
16	DEC II-22	T	16	DEC I-8	5	16			16		
17	UNI-4 OUT	Z	17		+	17			17		
18	DEC II-6	L	18		↖	18			18		
19	DEC II-25	W	19	DEC I-5	2	19			19		
20	DEC I-27	H	20		↓	20			20		
21	DEC II-27	Y	21	DEC I-9	6	21			21		
22	DEC II-10	P	22	DEC I-3	ø	22			22		
23	DEC II-11	Q	23	DEC I-4	1	23			23		
24	DEC II-9	O	24	DEC I-12	9	24			24		

Date: January 24, 1961

T & F UNIT - ENCODER WIRING (Continued)

Program: Output Format A

ENC. INPUT GP. I		
HUB	WIRED FROM	CHAR.
25	DEC I-21	B
26	DEC I-26	G
27		↑
28	DEC II-7	M
29	DEC II-26	X
30	DEC II-24	V
31	UNI-11 OUT	↓

ENC. INPUT. GP. II		
HUB	WIRED FROM	CHAR.
25		⊕
26		↘
27	UNI-12 OUT	↑
28	DEC I-18	.
29	DEC I-2	/
30		⦶
31		↓

ENC. INPUT. GP. III		
HUB	WIRED FROM	CHAR.
25		
26		
27		
28		
29		
30		
31		

ENC. INPUT. GP. IV		
HUB	WIRED FROM	CHAR.
25		
26		
27		
28		
29		
30		
31		

Date: January 24, 1961

T & F UNIT - DECODER/ENCODER WIRING

Program: Output Format A

INCOMING BUFFER OUTPUT		
HUB	WIRED TO	PURPOSE
1	DEC IN 1	
0	DEC IN 0-1	
2	DEC IN 2	
0	DEC IN 0-2	
4	DEC IN 4	
0	DEC IN 0-4	
8	DEC IN 8	
0	DEC IN 0-8	
16	DEC IN 16	
0	DEC IN 0-16	
32	DEC IN 32	
0	DEC IN 0-32	
64		
0		
PAR	DEC IN PAR	
0	DEC IN 0-PAR	

ENCODER OUTPUT		
HUB	WIRED TO	PURPOSE
1	BUS w-30	
2	BUS v-30	
4	BUS u-30	
8	BUS x-34	
16	BUS w-20	
32	BUS 1-34	
64		
PAR	BUS x-1	

INCOMING PRECEDENCE OUTPUT		
HUB	WIRED TO	PURPOSE
1		
0		

OUTGOING PRECEDENCE OUTPUT		
HUB	WIRED TO	PURPOSE
LC	UNI-11 IN	Encode Prec. ↓
UC	UNI-12 IN	Encode Prec. ↑

INC. PREC. IN	
HUB	WIRED FROM
UC	
UC	
LC	
LC	

OUT. PREC. IN	
HUB	WIRED FROM
IN	BUS 1-34
INH.	UNI-13 OUT

T & F UNIT - DECODER/ENCODER WIRING (Continued)

Date: January 24, 1961

Program: Output Format A

DECODER INPUT	
HUB	WIRED FROM
1	IN BUFF 1
0	IN BUFF 0-1
2	IN BUFF 2
0	IN BUFF 0-2
4	IN BUFF 4
0	IN BUFF 0-4
8	IN BUFF 8
0	IN BUFF 0-8
16	IN BUFF 16
0	IN BUFF 0-16
32	IN BUFF 32
0	IN BUFF 0-32
64	
0	
PAR	IN BUFF PAR
0	IN BUFF 0-PAR

PUNCH/COMP. INPUT	
HUB	WIRED FROM
1a	BUS w-30
1b	CPR-OUT 1
2a	BUS v-30
2b	CPR-OUT 2
4a	BUS u 30
4b	CPR-OUT 4
8a	BUS x-34
8b	CPR-OUT 8
16a	BUS w-20
16b	CPR-OUT 16
32a	BUS 1-34
32b	CPR-OUT 32
64a	BUS x-1
64b	CPR-OUT PAR
PAR-a	
PAR-b	

DELETE
WIRED FROM
DEC I-0 (1)
DEC I-13(')
DEC I-19(;)
DEC II-14(*)
DEC II-0 (t)
BUS a-25
DEC II-15 (?)

DELETE
WIRED FROM
DEC II-29(%)

T & F UNIT - SELECTOR WIRING

Date: January 24, 1961

Program: Output Format A

HIGH SPEED SEL. 1			
PURPOSE:			
PU HUB WIRED FROM		DO HUB WIRED FROM	
BUS X-24		HSS 1b S	
ELEMENT	S HUB TO	IN HUB FROM	NS HUB TO
a	BUS u-2	POWER	
b	D.O. HSS1	FD g 4	
c			
d			

LOW SPEED SEL. 6			
PURPOSE:			
PU HUB WIRED FROM		DO HUB WIRED FROM	
PD 103		BUS F10	
ELEMENT	S HUB TO	C HUB FROM	NS HUB TO
a	BUS F28	PD 130	
b	HSS 4c IN	LSS 8a S	
c			
d			

HIGH SPEED SEL. 2			
PURPOSE:			
PU HUB WIRED FROM		DO HUB WIRED FROM	
DEC II-13 ($)		BUS F-5	
ELEMENT	S HUB TO	IN HUB FROM	NS HUB TO
a	UNI-L IN	LSS 9b S	
b	BUS F-25	LSS 9c S	
c	UNI-D IN	PD 79	
d		HSS 3a S	BUS N-25

LOW SPEED SEL. 7			
PURPOSE:			
PU HUB WIRED FROM		DO HUB WIRED FROM	
AND 3 OUT		BUS F-6	
ELEMENT	S HUB TO	C HUB FROM	NS HUB TO
a	FD e IN	PD 25	UNI F IN
b			
c		PD 30	BUS N29
d		PD 36	F-29

HIGH SPEED SEL. 3			
PURPOSE:			
PU HUB WIRED FROM		DO HUB WIRED FROM	
BUS X-24		BUS F-7	
ELEMENT	S HUB TO	IN HUB FROM	NS HUB TO
a	HSS 2d IN	FD f 3	
b	UNI-1 IN	PD 100	
c		PD 97	BUS N-26
d		PD 99	BUS N-28

LOW SPEED SEL. 8			
PURPOSE:			
PU HUB WRIED FROM		DO HUB WIRED FROM	
PD 13		BUS F-8	
ELEMENT	S HUB TO	C HUB FROM	NS HUB TO
a	LSS 6b C	PD 1	BUS F26
b		PD 4	UNI-17 IN
c		PD 5	UNI-17 IN
d			

T & F UNIT - SELECTOR WIRING (Continued)

Date: January 24, 1961

Program: Output Format A

HIGH SPEED SEL. 4			
PURPOSE:			
PU HUB WIRED FROM		DO HUB WIRED FROM	
BUS W-25		BUS F-8	
ELEMENT	S HUB TO	IN HUB FROM	NS HUB TO
a		DEC I-1	HSS 5c IN
b		BUS h-20	UNCOND. DEL.
c	UNI K IN	LSS 6b S	BUS F27
d			

LOW SPEED SEL. 9			
PURPOSE:			
PU HUB WIRED FROM		DO HUB WIRED FROM	
FD f-4		BUS F-10	
ELEMENT	S HUB TO	C HUB FROM	NS HUB TO
a		FD 43	BUS F-30
b	HSS2a IN	FD f1	UNI-L IN
c	HSS2b IN	FD f2	BUS F11
d	BUS X-24	UNI-14 OUT	

HIGH SPEED SEL. 5			
PURPOSE:			
PU HUB WIRED FROM		DO HUB WIRED FROM	
BUS N-28		UNI-6 Out	
ELEMENT	S HUB TO	IN HUB FROM	NS HUB TO
a		BUS h-20	UNI-1 IN
b			
c	UNI-14 IN	HSS 4a N/S	BUS N-27
d	SET CAK 9	BUS N-25	UNI-5 IN

LOW SPEED SEL. 10			
PURPOSE:			
PU HUB WIRED FROM		DO HUB WIRED FROM	
FD 13		BUS F-26	
ELEMENT	S HUB TO	C HUB FROM	NS HUB TO
a		FD 2	BUS h-13
b		FD 3	BUS a-25
c		FD 5	BUS h-14
d	BUS F-7	FDa 4	

T & F UNIT - FUNCTION DETECTOR WIRING

Date: January 24, 1961

Program: Output Format A

FUNCTION DETECTOR a		
Purpose:		
Input Hub Wired From:	BUS h-13	
Out Hub	Wired to	Purpose
1	BUS F-12	ENCODE ↑
2	BUS b-14	ENCODE <
3	BUS d-23	ENCODE ↓
4	LSS 10d C	

FUNCTION DETECTOR e		
Purpose:	LSS 7a S	
Input Hub Wired From:		
Out Hub	Wired To	Purpose
1	START FILL a	
2	UNI-8 IN	STEP ON ENCODE
3		
4		

FUNCTION DETECTOR b		
Purpose:		
Input Hub Wired From:	BUS a-25	
Out Hub	Wired To	Purpose
1	BUS b-14	ENCODE <
2	BUS b-14	ENCODE <
3	BUS d-23	ENCODE ↓
4	BUS h-28	ENCODE Z

FUNCTION DETECTOR f		
Purpose:		
Input Hub Wired From:	UNI-1 OUT	
Out Hub	Wired To	Purpose
1	LSS 9b C	
2	LSS 9c C	
3	HSS 3a IN	
4	PU LSS 9	

FUNCTION DETECTOR c		
Purpose:		
Input Hub Wired From:	BUS h-14	
Out Hub	Wired To	Purpose
1	BUS d-23	ENCODE ↓
2	BUS d-24	ENCODE ↓
3	BUS 1-1	ENCODE ≡
4	BUS d-24	ENCODE ↓

FUNCTION DETECTOR g		
Purpose:		
Input Hub Wired From:	BUS h-20	
Out Hub	Wired To	Purpose
1		
2		
3		
4	HSS 1b IN	

FUNCTION DETECTOR d		
Purpose:		
Input Hub Wired From:	DEC II-15 (?)	
Out Hub	Wired To	Purpose
1	UNI-9 IN	ENCODE <
2	UNI-11 IN	ENCODE ↓
3	ACTIVATE	
4	BUS 1-1	ENCODE ≡

FUNCTION DETECTOR h		
Purpose:		
Input Hub Wired From:	UNI-15 OUT	
Out Hub	Wired To	Purpose
1	UNI-E IN	ENCODE ≡
2	UNI-3 IN	ENCODE E
3	ENC II-5	ENCODE BELL
4	I/O COM 3W	HSCL-W

T & F UNIT - UNIBUS, "AND", WIRING

Date: January 24, 1961

Program: Output Format A

UNIBUSES							
UNIBUS	INPUT HUBS WIRED FROM					OUTPUT HUB WIRED TO	PURPOSE
1	HSS 5a N/S	HSS 3b S	BUS F-30	BUS W-25		FD f IN	
2				BUS F7		BUS F6	
3	(E) DEC I-24	FD h 2				ENC I-1	ENCODE E
4	BUS h-28		AND 7 OUT			ENC I-17	ENCODE Z
5	BUS N-26		HSS 5d N/S	BUS F-25		CAK 11	
6	AND 6 OUT	BUS F-6	BUS W25	PD 101		D.O. HSS 5	
7							
8	AND 5 OUT	PD 1	BUS F-30	FD e 2	BUS F28	BUS h-7	STEP ON ENCODE
9	BUS b-14	FD d 1				ENC I-8	ENCODE <
10							
11	OUTPUT PREC.-LC	FD d 2	BUS b-25			ENC I-31	ENCODE ↓
12	OUTPUT PREC.-UC	BUS F-12				ENC II-27	ENCODE ↑
13	BUS e-28	BUS F-12				OUTPUT PREC.-INH	
14	2FDa OUT	HSS 5c S				ISS 9d C	
15	Parity Odd	(¢) DEC I-30	(,) DEC I-17	(/) DEC II-20	(+) DED II-19	FD h IN	ERRORS
16							
17	BUS 1-1	BUS F26	BUS h-13	ISS8b N/S (PD 4)	ISS8c N/S (PD 5)	UNI-18 IN	
18	BUS h-28	BUS b-25	BUS b-14	BUS F-12	UNI-17 OUT	INV 5 IN	
19	DEC I-1(Δ)	FILL a OUT				BUS e-28	
20							

Date: January 24, 1961

T & F UNIT - UNIBUS, "AND", WIRING (Continued)

Program: Output Format A

"AND"				
"AND"	INPUT HUBS WIRED FROM		OUTPUT HUB WIRED TO	PURPOSE
1				
2	INV 5 OUT	CPR-OUT	CPR-STEP	
3	PD 11	DEC II26	PU LSS 7	
4				
5	INV 3 OUT	BUS u-2	UNI-8 IN	
6	INV 4 OUT	PD 100	UNI-6 IN	D.O. HSS 5 IF NO Δ AT W5C5
7	INV 2 OUT	DEC II-28 (Z)	UNI-4 IN	
8				

UNIBUS					
	IN	IN	IN	OUT	PURPOSE
L	HSS 2a S	LSS 9b N/S		FI #7	Track Switch
K	BUS F11	BUS F-25	HSS 4c S	BUS F-24	SET PDW 1 & 2
J	BUS N-25	BUS N-26		WAK 9	
I					
H	BUS L-29	PD 19		CAK 5	
G	BUS b-19	BUS F-29		WAK 4	
F	BUS N-28	LSS 7a N/S		BUS b-19	SET WAK-5 CAK-5
E	BUS 1-1	FD h-1		ENC I-2	ENCODE ≡
D	HSS 2c S	PD 41		BUS N-24	

Date: January 24, 1961

Program: Output Format A

T & F BUSSES

BUS	HUB	WIRED TO	PURPOSE
x-1	x-1	ENC Out-PAR	
	w-1	P/C 64	
	v-1	INV 1 IN	
	u-1		
u-2	u-2	HSS1a S	
	u-3	BUS h-20	
	u-4		
	u-5	AND 5 IN	
	u-6	INV 4 IN	
w-20	w-20	ENC Out 16	
	w-21	P/C 16	
	v-18	CPR IN 16	
	v-19		
	v-20		
	v-21		
u-30	u-30	ENC Out 4	
	u-31	P/C 4	
	u-32	CPR IN 4	
	u-33		
v-30	v-30	ENC Out 2	
	v-31	P/C 2	
	v-32	CPR IN 2	
	v-33		
w-30	w-30	ENC Out 1	
	w-31	P/C 1	
	w-32	CPR IN 1	

BUS	HUB	WIRED TO	PURPOSE
w-30	w-33		
x-34	x-34	ENC Out 8	
	w-34	P/C 8	
	v-34	CPR IN 8	
	w-34		
l-1	l-1	FDc 3	
	k-1	UNI-E IN	ENCODE
	j-1	UNI-17 IN	
	i-1	FD d 4	
l-34	l-34	ENC Out 32	
	k-34	P/C 32	
	j-34	CPR IN 32	
	i-34	OUTPUT PREC. IN	
h-7	h-7	UNI-8 Out	
	g-7	INV 7 IN	
	f-7	PD STEP IN-3	
	e-7		
	d-7		
h-13	h-13	FD a IN	
	g-13	ISS 10a N/S	
	f-13	DEC II-29	
	e-13	UNI-17 IN	
h-14	h-14	FD c IN	
	g-14	CAK 6	
	f-14	WAK 8	
	e-14	ISS 10c N/S	

T & F BUSSES (Continued)

Date: January 24, 1961

Program: Output Format A

BUS	HUB	WIRED TO	PURPOSE
h-20	h-20	HSS 5a IN	
	g-20	HSS 4b IN	
	f-20	FD g IN	
	e-20	BUS u-2	
h-21	h-21		
	g-21		
	f-21		
	e-21		
h-28	h-28	UNI-4 IN	
	g-28	FD b 4	
	f-28	UNI-18 IN	
e-28	e-28	UNI-13 IN	
	d-28	ENC I-4	
	c-28	UNI-19 OUT	
b-14	b-14	FD a 2	
	b-15	FD b 1	
	b-16	FD b 2	
	b-17	UNI-9 IN	
	b-18	UNI-18 IN	
b-19	b-19	UNI-F OUT	
	b-20	CAK 4	
	b-21	UNI-G IN	
	b-22		
a-20	a-20		
	a-21		
	a-22		

BUS	HUB	WIRED TO	PURPOSE
d-23	d-23	BUS d-24	
	c-23	FD a 3	
	b-23	FD b 3	
	a-23	FD c 1	
d-24	d-24	BUS d-23	
	c-24	FD c 2	
	b-24	FD c 4	
	a-24	BUS b-25	
b-25	b-25	BUS d-24	
	b-26	DFC I-31	
	b-27	UNI-11 IN	
	b-28	UNI-18 IN	
a-25	a-25	ISS 10b N/S	
	a-26	FD b IN	
	a-27	INV 2 IN	
	a-28	DELETE CHAR. IN	

T & F BUSSES

Date: January 24, 1961

Program: Output Format A

BUS	HUB	WIRED TO	PURPOSE
X-21	X-21		
	X-22		
	X-23		
X-24	X-24	PU HSS 1	
	X-25	P.U. HSS 3	
	X-26	LSS 9d S	
W-25	W-25	P.U. HSS 4	
	W-26	DEC II-13	
	W-27	UNI-1 IN	
	W-28	ENC II-14	
	W-29	UNI 6 IN	
X-27	X-27		
	X-28		
	X-29		
N-24	N-24	CAK 2	
	M-24	WAK 0	
	L-24	UNI-D OUT	
N-25	N-25	UNI J IN	
	M-25	HSS 5d IN	
	L-25	HSS 2d NS	
N-26	N-26	HSS 3c N/S	
	M-26	UNI-5 IN	
	L-26	UNI-J IN	
N-27	N-27	HSS 5c N/S	
	M-27	2FD a 1	
	L-27	2ED a 2	

BUS	HUB	WIRED TO	PURPOSE
N-28	N-28	UNI-F IN	
	M-28	HSS 3d N/S	
	L-28	PU HSS 5	
N-29	N-29	LSS 7c NS	
	M-29	WAK 5	
	L-29	UNI H IN	
F-5	F-5	BUS F6	
	E-5	FI 6	
	D-5	D.O. HSS 2	
	C-5		
F-6	F-6	BUS F5	
	E-6	DO LSS 7	
	D-6	UNI-6 IN	
	C-6	UNI 2 OUT	
F-7	F-7	UNI 2 IN	
	E-7	LSS 10d S	
	D-7	D.O. HSS 3	
	C-7	BUS F-8	
F-8	F-8	BUS F-9	
	E-8	D.O. HSS 4	
	D-8	D.O. LSS 8	
	C-8	BUS F-7	
F-9	F-9	BUS F-8	
	E-9	DISCONNECT	
	D-9		
	C-9		

Date: January 24, 1961

T & F BUSSES (Continued)

Program: Output Format A

BUS	HUB	WIRED TO	PURPOSE
F-10	F-10	D.O. LSS 9	
	E-10	BUS F26	
	D-10	D.O. LSS 6	
	C-10		
F-11	F-11	LSS 9c NS	
	E-11	UNI K IN	
	D-11	SET PD c1	
	C-11		
F-12	F-12	UNI-12 IN	
	E-12	UNI-18 IN	
	D-12	FD a 1	
	C-12	UNI-13 IN	
F-23	F-23		
	E-23	BUS F-24	
	D-23	SET PDC 2	
	C-23	SET PDC 4	
F-24	F-24	BUS F-23	
	E-24	SET PDW 2	
	D-24	SET PDW 1	
	C-24	UNI-K OUT	
F-25	F-25	HSS 2b S	
	E-25	UNI-5 IN	
	D-25	WAK 1	
	C-25	UNI-K IN	

BUS	HUB	WIRED TO	PURPOSE
F-26	F-26	LSS 8a NS	
	E-26	UNI 17 IN	
	D-26	LSS 10 DO	
	C-26	BUS F10	
F-27	F-27	SET PD c8	
	E-27	HSS 4c S	
	D-27	BUS F28	
	C-27		
F-28	F-28	LSS 6a S	
	E-28	UNI 8 IN	
	D-28	SET PD W8	
	C-28	BUS F27	
F-29	F-29		
	E-29	LSS 7d NS	
	D-29	SET CAK 10	
	C-29	UNI G IN	
F-30	F-30		
	F-30	UNI-8 IN	
	D-30	UNI-1 IN	
	C-30	LSS 9 a N/S	

DATE: JANUARY 24,1961

T & F UNIT - PROGRAM DIST. & ADDRESS WIRING

PROGRAM: OUTPUT FORMAT A

PROGRAM DISTRIBUTOR OUT		
HUB	WIRED TO	PURPOSE
1	LSS 8a C UNI-8 IN	
2	LSS 10a C	
3	LSS 10b C	
4	LSS 8b C	
5	LSS 8c C LSS 10c C	
11	AND 3 IN	
12	CAK 7 WAK 7	
13	PU LSS 8 PU LSS 10	
19	UNI-H IN WAK 6	
25	LSS 7a C	
30	LSS 7c C	
36	LSS 7d C	
40	END FILL	
41	UNI-D IN	
43	PD 44 LSS 9a C	
44	PD 43	
79	HSS 2c IN	
97	HSS 3c IN	
99	INV 3 IN HSS 3d IN	
100	AND 6 IN HSS 3b IN	
101	UNI-6 IN	
103	PU LSS 6	
130	LSS 6a C	

MOD 12 PDK OUT		
HUB	WIRED TO	PURPOSE

STEP PD IN	
HUB	WIRED FROM
1. STEP - DECODE	INV 7 OUT
2. VOID STEP-DECODE	
3. STEP - ENCODE	BUS h-7
4. VOID STEP-ENCODE	

T & F UNIT - PROGRAM DIST. & ADDRESS WIRING (Continued)

Date: January 24, 1961

Program: Output Format A

SET IN CHAR. ADD	
HUB	WIRED FROM
11	UNI-5 OUT
10	BUS F29
9	HSS 5d S
8	
7	PD 12
6	BUS h-14
5	UNI H OUT
4	BUS b19
3	
2	BUS N-24
1	
S	

SET IN WORD ADD	
HUB	WIRED FROM
0	BUS N-24
1	BUS F25
2	
3	
4	UNI - G OUT
5	BUS N-29
6	PD 19
7	PD 12
8	BUS f14
9	UNI - J OUT

SET PD CHAR. IN	
HUB	WIRED FROM
8	BUS F27
4	BUS F-23
2	BUS F-23
1	BUS F11

SET PD WORD IN	
HUB	WIRED FROM
8	BUS F28
4	
2	BUS F-24
1	BUS F-24

Date: January 24, 1961

Program: Output Format A

T & F UNIT - FUNCTION WIRING

FILL					
FILL	INHIBIT HUB WIRED FROM	START HUBS WIRED FROM	END HUBS WIRED FROM	OUT HUB WIRED TO	PURPOSE
a		FD e 1	FD 40	UNI-19 IN	PAD SPEED FIX TIME, AND ALT. IN X MSG.
b					
c					
d					

FUNCTION INPUTS		
FUNCTION	INPUT HUB WIRED FROM	INHIBIT HUB WIRED FROM
1. OUTPUT STOP		
2. OUTPUT START		
3. INPUT STOP		
4. CORRECTION		
5. VOID		
6. END OF DATA	BUS F- 5	
7. TRACK SWITCH	UNI-L OUT	
8. BUFFER CLEAR		
9. WORD CLEAR		
10. STOP		
11. STOP		

STOP OUTPUT	
WIRED TO	PURPOSE

DECODER OUT	
WIRED TO	PURPOSE

DECODER IN HUB WIRED FROM:

2-CHAR. FUNC. DET. a		
PURPOSE:		
IN 1 HUB WIRED FROM	IN 2 HUB WIRED FROM	OUT HUB WIRED TO
BUS N-27	BUS N-27	UNI-14 IN

INVERTERS			
INV.	IN HUB WIRED FROM	OUT HUB WIRED TO	PURPOSE
1	BUS x-1	CPR IN-PAR	INVERT PARITY OF ENC. OUT
2	BUS a-25	AND 7 IN	
3	FD- 99	AND 5 IN	
4	BUS u-2	AND 6 IN	
5	UNI-18 OUT	AND 2 IN	
6			
7	BUS h-7	FD STEP IN 1	

2-CHAR. FUNC. DET. b		
PURPOSE:		
IN 1 HUB WIRED FROM	IN 2 HUB WIRED FROM	OUT HUB WIRED TO

Date: January 24, 1961

Program: Output Format A

T & F UNIT - MISCELLANEOUS CONTROL WIRING

CHANNEL PAR. REG. INPUT	
HUB	WIRED FROM
1	BUS w-30
2	BUS v-30
4	BUS u-30
8	BUS x-34
16	BUS w-20
32	BUS 1-34
64	
P	INV-1 OUT

CHANNEL PAR. REG. OUTPUT	
HUB	WIRED FROM
1	P/C 1
2	P/C 2
4	P/C 4
8	P/C 8
16	P/C 16
32	P/C 32
64	
P	P/C 64

CHANNEL PARITY CONTROL		
HUB	WIRED TO/FROM	PURPOSE
ACT.	FD d 3	
ERROR		
NC		

SELECT CHARACTER PARITY		
HUB	WIRED TO/FROM	PURPOSE
ODD	UNI-15 IN	
C		
EVEN		

ADVANCE CHANNEL PAR.	
HUB	WIRED TO/FROM
IN	
STEP	AND 2-OUT
OUT	AND 2-IN

SELECT CHANNEL PARITY	
HUB	WIRED TO/FROM
ODD	CHANNEL PARITY S
S	CHANNEL PARITY ODD
EVEN.	

COMPUTER I/O REGISTER		
HUB	WIRED TO	PURPOSE
A-1		
A-0		
B-1		
B-0		
C-1		
C-0		
D-1		
D-0		

MODE SELECTION	
HUB	WIRED FROM
IN-1	
IN-2	
IN-3	
OUT-1	POWER
OUT-2	POWER
OUT-3	POWER

I/O COMPUTER	
HUB	WIRED FROM
a	
b	
c	
d	

T & F UNIT - MISCELLANEOUS CONTROL WIRING (Continued)

Date: January 24, 1961

Program: Output Format A

PUNCH INT'L'K. PURPOSE		
NS HUB WIRED TO	C HUB WIRED TO	S HUB WIRED TO

MISCELLANEOUS HUBS	
HUB	WIRED FROM
FILL	
DEL.	
REVERSE HUBS	

HIGH SPEED I/O COMP	
HUB	WIRED FROM
w	
x	
y	
z	

ALTERNATE SWITCHES				
SWITCH	PURPOSE	N/S HUB WIRED TO	C HUB WIRED FROM	S HUB WIRED TO
a				
b				
c				
d				
e				
f				

PROGRAM INDICATORS	
IND.	WIRED FROM
1	
2	
3	
4	
5	
6	

T & F UNIT
SPECIAL FAA HUBS

Date: January 24, 1961

Program: Output Format A

TIME OUT		
HUB	WIRED TO	PURPOSE
ST		
END		
0		
1		
CL		

SIM	
WIRED TO	PURPOSE

COMM. READY		
HUB	WIRED TO	PURPOSE
A SET		
B SET		
ST RDY		

I/O COMM.			
	HUB	WIRED FROM	PURPOSE
2	W		
	X		
	Y		
	Z		
3	W	BUS F-9 FD h 14	
	X		
	Y		
	Z		