AD0277815 2419 Ref Pub

ASD TECHNICAL REPORT 61-626

61

REMOTE-HANDLING TASK PERFORMANCE AS A FUNCTION OF INDEXING VARIABLES

D. F. BAKER, LIEUTENANT, USAF

BEHAVIORAL SCIENCES LABORATORY
AEROSPACE MEDICAL RESEARCH LABORATORIES

2419

DECEMBER 1961

20030109231

AERONAUTICAL SYSTEMS DIVISION
AIR FORCE SYSTEMS COMMAND
UNITED STATES AIR FORCE
WRIGHT-PATTERSON AIR FORCE BASE, OHIO

NOTICES

When US Government drawings, specifications, or other data are used for any purpose other than a definitely related government procurement operation, the government thereby incurs no responsibility nor any obligation whatsoever; and the fact that the government may have formulated, furnished, or in any way supplied the said drawings, specifications, or other data is not to be regarded by implication or otherwise, as in any manner licensing the holder or any other person or corporation, or conveying any rights or permission to manufacture, use, or sell any patented invention that may in any way be related thereto.

Qualified requesters may obtain copies from ASTIA. Orders will be expedited if placed through the librarian or other person designated to request documents from ASTIA.

Copies available at Office of Technical Services, Department of Commerce, $ 0.75.

Do not return this copy. Retain or destroy.

ASD TECHNICAL REPORT 61-626

REMOTE-HANDLING TASK PERFORMANCE AS A FUNCTION OF INDEXING VARIABLES

D. F. BAKER, LIEUTENANT, USAF

BEHAVIORAL SCIENCES LABORATORY
AEROSPACE MEDICAL RESEARCH LABORATORIES

DECEMBER 1961

Project No. 7184
Task No. 718407

AERONAUTICAL SYSTEMS DIVISION
AIR FORCE SYSTEMS COMMAND
UNITED STATES AIR FORCE
WRIGHT-PATTERSON AIR FORCE BASE, OHIO

900 - June 1962 - 36-1584 & 1585

FOREWORD

This report was prepared by the Maintenance Design Section, Human Engineering Branch, Behavioral Sciences Laboratory, 6570th Aerospace Medical Research Laboratories. The investigation was conducted from November 1960 to January 1961, under Project 7184, "Human Factors in Advanced Flight," Task 718407, "Design Criteria for Nuclear Devices," with Lt. D. Frederick Baker, USAF, serving as principal investigator. The author expresses appreciation to Major Leroy D. Pigg, USAF, Chief, Maintenance Design Section, for his help in the preparation of this report.

ABSTRACT

Three variables in remote-handling operations were studied: mode of indexing actuation, rate of angular indexing, and task distance. A CRL Model 8 Master Slave Manipulator was used by subjects performing a positioning task which required angular indexing (mechanical motion was locked in the Y axis). Actuation of indexing was either by a finger trigger or a foot pedal, and at one of three different indexing speeds. The task involved positioning objects at one of two distances from the operator. In terms of speed of performance, the foot-pedal and finger-trigger controls were equal. However, rate of learning and accuracy of performance were greater with foot-pedal actuation. Task efficiency, measured in speed of performance, increased directly with indexing speed at the far-task distance. This effect was not noted at the near distance.

PUBLICATION REVIEW

This document has been reviewed and approved for publication.

Walter F. Grether

WALTER F. GRETHER
Technical Director
Behavioral Sciences Laboratory

REMOTE-HANDLING TASK PERFORMANCE AS A FUNCTION OF INDEXING VARIABLES

INTRODUCTION

Manipulator Design

In an outline of features necessary to insure versatile, fast, accurate, and dexterous general-purpose master-slave manipulators, R.C. Goertz (ref. 8) stated that a minimum of seven degrees of freedom in motion and force control was essential: three degrees for translation and three for rotation (figure 1) and one for opening and closing the hand jaws. From the axis of the "shoulder" of a Model 8 Master-Slave Manipulator, the arm has two important translating motions—the "X" (left-right) and "Y" (fore-aft) motions. These motions are restricted in normal operations by the hot cell wall and the workspace of the operator. To overcome these restrictions, and thereby increase the area covered by the slave arm, two solutions are possible*: (a) angular indexing and lateral rotation, and (b) longitudinal and transverse translation of a bridge assembly.

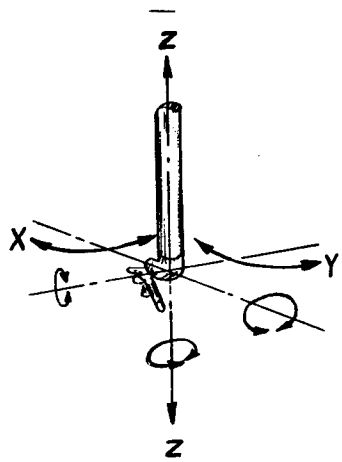

Figure 1. Master Control Arm of a Model 8 Manipulator Showing Six Degrees of Freedom (X, Y, and Z motions for translation and rotation on three axes)

The X and Y motions move in arcs from the shoulder axis of the manipulator.

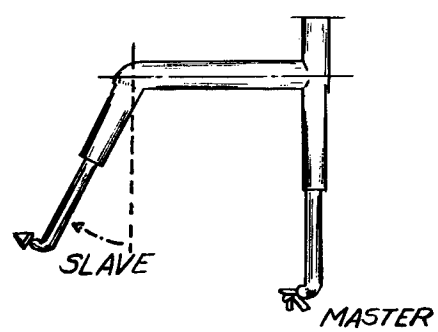

Figure 2. Side View Showing Angular Indexing on the Model 8 Manipulator

Slave arm is displaced in Y motion (direction of arrow from broken line) without corresponding displacement of master arm.

*For this discussion, the advantages of mobile units will not be evaluated.

Angular Indexing and Lateral Rotation:

Angular indexing of a master-slave manipulator consists of "Y" movement of the slave arm without corresponding displacement of the master arms (figure 2). The Argonne National Laboratory (ANL) Model 8 Master-Slave Manipulator is the first of the Argonne operational series (model 4 and model 7) to have angular indexing. Lateral rotation is "X" movement of the slave arm without corresponding displacement of the master arm (figure 3). Central Research Laboratories (CRL)* and American Machine and Foundry (AMF) have modified the ANL model 8 manipulator to include lateral rotation.** Both the indexing and rotating mechanisms are electrically driven and are equipped with continuously variable speed controls. In France, a mechanical "cable" manipulator has been developed with provisions for angular indexing driven by a reduction motion. It does not include lateral rotation, but if an "overwall" (ref. 11) rather than thruport (model 8) cell system is used, a rail mechanism provides limited transverse translation of the entire assembly.

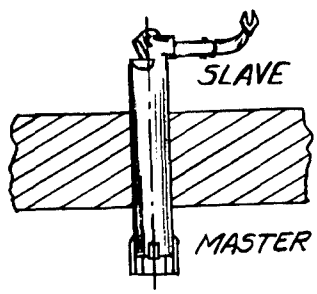

Figure 3. Top View Showing Lateral Rotation on the Model 8 Manipulator

Slave arm is displaced in X motion without corresponding displacement of master arm.

Longitudinal and Transverse Translation:

In the design of heavy-duty master-slave manipulators, the slave assembly is mounted on rails and is capable of longitudinal and transverse translation (figure 4). In two American master-slave manipulator designs, longitudinal and transverse translation is possible in addition to "X" and "Y" motions through arcs (thus preserving the advantage of correspondence of slave to master movement for general-purpose manipulation). An electronically controlled master-slave (Argonne model 2) was designed with the slave unit on a carriage and bridge assembly for rectilinear movement. A very similar electromechanical manipulator was developed by the Marvel-Schelber Products Division of Borg-Warner Corporation***: the slave arm is mounted on a bridge assembly providing longitudinal and transverse translation. Two master-slave manipulators developed at Sacley, France (French Atomic Energy Commission), have provisions for rectilinear movement but not for "X" and "Y" motion from the axis of the slave arm (ref. 10). One French model, an Air Power Manipulator, is capable of longitudinal and transverse translation by means of mechanically linked connections: rotation of the forearm and grip of the tong is made possible with double-acting air cylinders. The other French model, a Magnetic Manipulator, is capable (in lieu of "X" and "Y" motion) of rectilinear translation by means of small electric motors which drive four permanent magnets, which in turn move slave magnets within the hot cell.

* Red Wing, Minnesota
** This movement is called "side canting" by AMF, Greenwich, Conn.
*** Decatur, Illinois

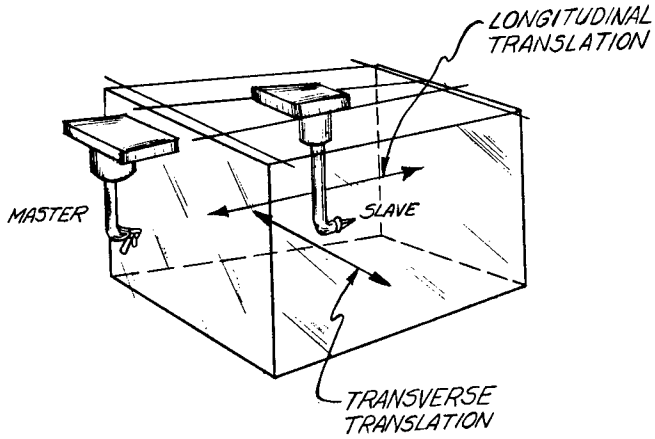

Figure 4. ''Electro-Type'' Manipulator Showing Slave Carriage Riding on Bridge to Effect Longitudinal and Transverse Translation

One primary advantage of angular indexing is the ability to extend the slave arm horizontally to remove the master-slave unit (or, conversely, replace the entire unit) through the thruwall opening of a hot cell. Manipulators capable of this maneuver are known as plug-in master-slave manipulators. The model 8 can, therefore, be called a plug-in manipulator. Plug-in manipulators, in which the slave arms are extended horizontally by means of a mechanical connection, include: (a) the General Electric Man II (ref. 6) which allows a 90° forward tilt of the master arm to extend the slave arm horizontally for removal; as the master and slave arms are moved into a nonparallel relationship, an automatic tensioner unit compensates for altered tape path lengths thereby preserving optimum tape pre-tension; and (b) the Hanford Slave Manipulator (ref. 7) which has an inner telescoping arm that can, after removal of one gear from the outer elbow assembly to disengage the corresponding motion of the telescoping arms, be swung to a horizontal position (without corresponding movement of the master arm) and inserted into a hot cell. The gear is then replaced, and the arm is lowered into the cell. To remove the manipulator, this process is reversed. In a very limited way, the Hanford manipulator is capable of longitudinal translation of the entire assembly by loosening a small set screw at the collar of the thruwall opening. Thirty inches of travel is possible by this method.

Only the CRL and AMF modified model 8 manipulators have both angular indexing and lateral rotation. On the first model 8 manipulators, the angular indexing control was a 3-position toggle switch placed on the master tube assembly: with the switch up, the slave arm indexed out from the operator; with the switch down, the slave arm indexed in toward the operator. Thus, to activate the angular indexing switch, one hand had to be taken from the master-control hand grip and raised to the toggle switch on the master tube assembly. On the modified manipulator, angular indexing is made possible by a trigger on the master-control hand grip (figure 5). It is activated by movement of the ring finger. These modified model 8 manipulators are designed with the lateral rotation controls on the master tube assembly: as the toggle switch is pushed to the right, the slave arm rotates laterally to the right and vice versa for the left. The requirement for taking the hand from the master-control hand grip to activate a movement switch is thus reintroduced with lateral rotation.*

One solution to this problem is foot-pedal activators for lateral rotation, angular indexing, or both. For instantaneous activation, the operator should be seated so that his foot can always be on the pedal, thus allowing facility of activation comparable to that of a trigger control.

---

*Recently, the side-canting control on the AMF manipulator has been located on the master-control hand grip.

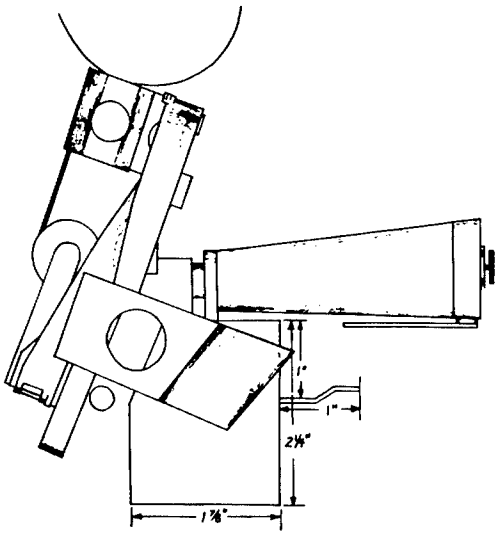

Figure 5. Modification of Model 8 Master Control Showing Finger-Trigger Indexing Actuation Switch

Experimental Background

Angular indexing with foot-pedal controls is more fully explored in this experiment. Accuracy of positioning is an important criterion for evaluation of indexing operations. There have been many studies concerning the positioning of limbs of a human operator. The relevance of these early experiments lies in the similarity of remote-handling operations where the operator is positioning "limbs" of the remote manipulator. Woodworth (in ref. 13) did the first known studies of accuracy in positioning from which he concluded: "the path to skill lies in increasing the accuracy of the initial adjustment." Jenkins and Conner (ref. 9) carried out studies in which they found that accuracy of this initial adjustment (referred to as travel time) decreases as movement speed increases. From these studies, we hypothesize that accuracy of initial adjustment (travel time) is an important factor leading to skillful operation of manipulators, and that there is some optimal rate of angular travel for operations involving angular indexing. Bennett (ref. 3) in a study on man-machine problems in remote-handling equipment concluded, ". . . since several studies . . . have shown that travel aspects of motion are less affected by learning than the manipulative aspects, it might follow that, for the remote manipulation situation, savings in time should be realized if movement of the effector was large relative to movement of the control. It is likely, however, that accuracy of control would be reduced." Bennett was discussing control-effector movement in terms of actual movement of the master arm in space in relation to variable ratios of slave arm movement in space.

While the CRL model 8 manipulator used in this study is not, and cannot economically be designed to be, capable of this type of operation, a somewhat comparable operation is possible by locking the master arm and moving the slave arm by means of an electric indexing device.

Problem

For the past 2 years, research has been conducted at the 6570th Aerospace Medical Research Laboratories involving remote-handling equipment. During this research, we felt that body members other than the arms and hands might effectively be used to perform what is essentially "arm and hand" operations of the slave. A study of foot control versus hand control of angular indexing was thought to be a step toward evaluation of this problem. Indeed, since it was somewhat awkward to operate the typical indexing finger trigger without moving or opening the jaws of the slave arm, the foot control might, in comparable situations, be even better than hand control.

Although a foot control might alleviate a control interaction problem, foot control might not be so rapid or so precise as hand control. The reaction time of the foot is considerably slower than that of the hand. Thus, a foot control could compromise the operator's ability to position the remote arm at the desired position, resulting in potential damage to equipment and loss of time in jockeying the slave arm into position.

In this experiment, we compare foot with hand control of indexing. Since indexing is normally an intermittent, infrequent operation, and since precise indexing is rarely required, we set up an artificial test situation requiring both continuous and accurate indexing control. If foot control, under these atypically stringent conditions, proved to be as effective as hand control, it would also be as effective under the less stringent normal operating conditions.

An experiment involving normal operations with the normal amount of indexing would be hopelessly time consuming. Furthermore, any differences in performance due to differences between the two modes of indexing might easily be obscured by the more frequent nonindexing operations. For this reason, we compare hand with foot control in a situation in which fore and aft motions could be accomplished only by indexing. Thus, in the experiment the subject had all normal freedom of movement of the manipulator except the arm could be moved fore and aft only by the indexing control.

METHOD

Apparatus

A CRL Argonne version of the Model 8 Master-Slave Manipulator, with a seat provided for the operator (ref. 1), was used for the experiment. The "Y" motion of the manipulator was locked. Motion in this axis was possible only by angular indexing of which there were two control configurations used: (a) a trigger mount on the master control hand grip (see figures 5 and 6) and (b) a foot pedal—light, spring-loaded to center, heel-toe switch (see figure 7).

Three speeds for angular indexing were used: 2.1° per second, 6.2° per second, and 11.4° per second.* A voltmeter was cut into the indexing motor to calibrate the three speeds which were set by means of wedges placed in the variable speed control mechanism (see B, figure 6).

Objects to be handled were a round peg (diameter 1-1/2 inches, height 7/8 inch), a 1-1/2-inch cube, and a key-shaped object (see figures 8 and 9).

Task distance was measured from the inside of the mock-up hot cell wall to the cutout pattern of the key-shaped object (see figures 10 and 11). Half the subjects performed the task at 40 inches and half at 80 inches. At all times, a locking device eliminated any "Y" motion in the right master assembly, except that provided by indexing.

---

*These rates cannot be considered exact, since friction, atmospheric conditions, etc., acted upon the mechanism to reduce accuracy of rate setting.

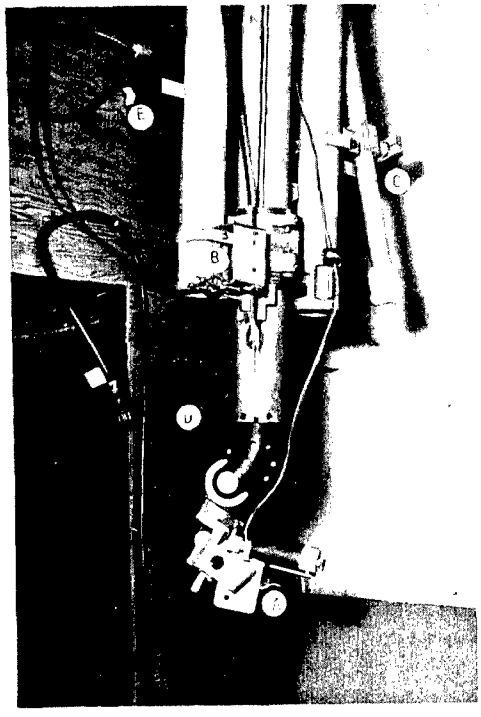

Figure 6. Control Arm of Model 8 Manipulator

A-Finger-trigger indexing actuation switch
B-Wedges for rate control (note wedge on the rate control pull handle)
C-''Y'' motion lock
D-Voltmeter to calibrate rate of indexing
E-Plugs inserted here to change mode of indexing

Figure 7. Another View of Operator Station

Foot pedal is on the platform, bottom left of photograph.

Figure 8 (left). Front View of Operator Performing Experimental Task

This shows the start of the task with the operator just about to pick up the round-shaped object.

Figure 9 (right). Key-Shaped Object Used for Positioning in Key-Shaped Pattern

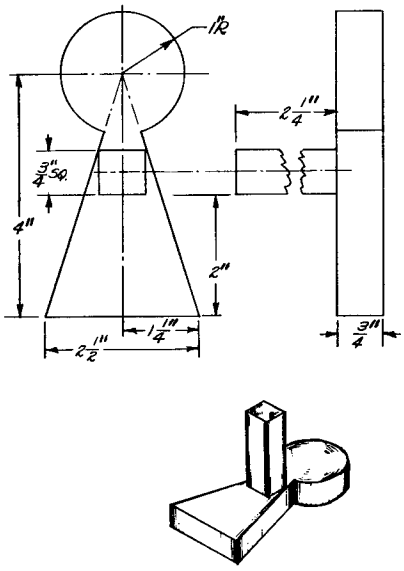

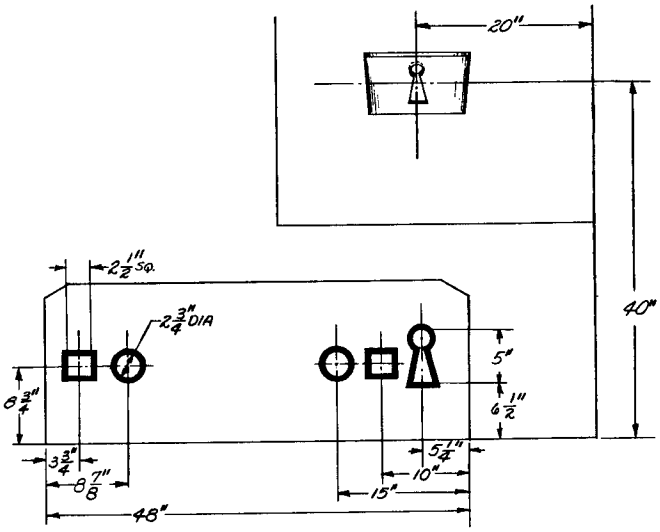

Figure 10 (left). Top View of Task Layout

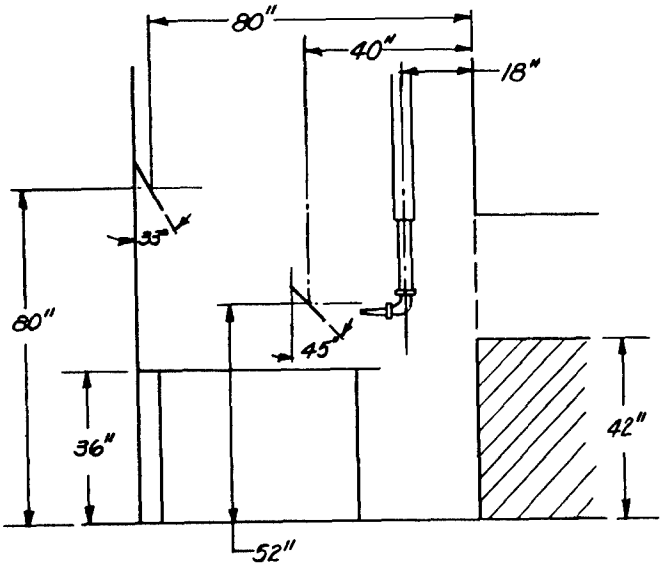

Figure 11. Side View of Task Layout Showing Key-Shaped Pattern at 45° (40 inches from hot cell wall mockup) and 33° (80 inches from cell wall mockup)

Subjects

Twenty-four males, undergraduate university students whose ages ranged from 18 to 30 years, served as subjects. None of the subjects had had any previous experience operating a remote master-slave manipulator.

Design

Three variables were investigated: (a) mode—foot-pedal versus finger-trigger control of angular indexing, (b) rate—angular indexing at three different rates, and (c) distance—near versus far task distance.

Procedure

Every subject was first given a brief history of remote-handling devices. He then sat in the operator's seat. The two methods of indexing were explained to him, and instructions on how to set the three speeds for indexing were given. The task was then described as follows:

> ''You are to pick up the round-shaped object with your right hand (manipulator right hand), transfer the object midair to the left hand of the manipulator (your left hand), and place it in the round pattern. Then pick up the cube with your left hand, transfer it midair to your right hand, and place it in the square-shaped pattern. Next, pick up the key-shaped object, with the right hand 'fingers' of the manipulator placed in the appropriate guides of the key-shaped object. Then by means of either the foot pedal or finger trigger (set at one of three speeds) place the key-shaped object in the key-hole pattern.'' (See figure 12.)

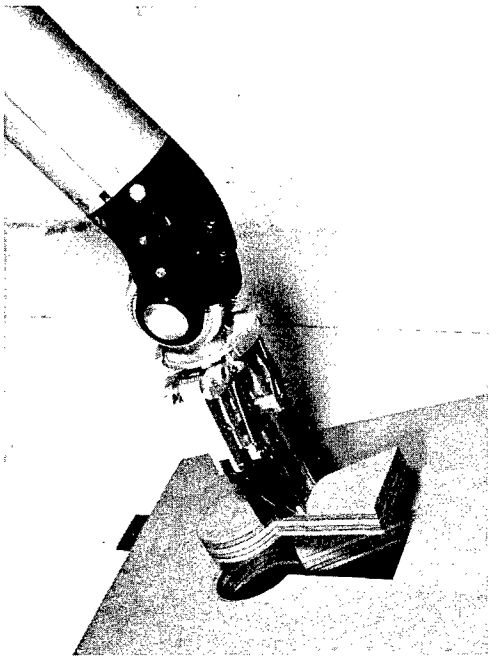

Figure 12. Close-Up of Slave Arm Inserting Key-Shaped Object into Key-Shaped Pattern

The above procedure was outlined very slowly as the subject performed two practice trials: one using the foot pedal, the other using the finger trigger. In both cases, the rate was set at 6.2° per second. Half the subjects performed the practice task at the far distance, the other half at the near distance. During the experiment, subjects changed the rate of indexing before every trial according to instructions from the experimenter. After three trials, the subject changed the mode.* Thus, the subject knew what mode of operation and what speed of indexing he was using in performing a particular trial. (See Appendix I for order of rate, mode, and distance.) Each subject performed the task 6 times, using the 3 rates of indexing with each of the 2 modes of indexing (see figure 13). Half of the subjects performed at each distance.

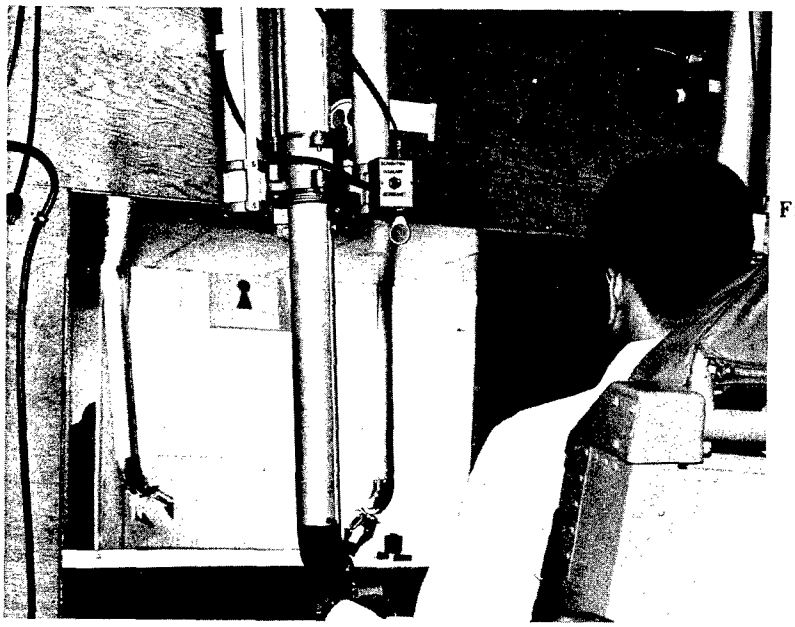

Figure 13. Rear View of Operator Performing Experimental Task

This shows the operator placing the cube in the square pattern just prior to picking up the key-shaped object.

*Mode was changed by changing plugs in a socket located on the cell wall (see E in figure 6) and rate was changed as previously explained by inserting various sizes of wedges on the rate control lever (see B in figure 6).

The subjects did not know which elements of the task were being timed. A hand-operated, electric stop clock series was used. The subject's performance was recorded as follows: (a) pickup time—measured from the moment the subject released his grip on the cube with his right hand until the indexing control was activated (after he picked up the key-shaped object); (b) travel time—measured from the activation of the indexing control until the slave arm stopped moving as a result of this initial use of the control*; (c) adjustment time—measured from the time the slave arm stopped (as described above) until the subject had successfully placed the key-shaped object in the key-hole pattern; (d) error—simple counts of two types of errors: (1) dropping the key-shaped object and (2) indexing in the wrong direction immediately after pickup.

RESULTS

The three experimental variables in this experiment—mode (hand versus foot actuation of indexing), distance (measured from pickup of key object to positioning of the key object: 40 inches and 80 inches), and speed (speed of indexing the slave arm: 2.1°, 6.2°, and 11.4° per second)—were analyzed in various combinations against four measures of operator performance:

(1) Pickup time
(2) Travel time
(3) Adjustment time
(4) Error

Tables I, II, and III present the various mean time-scores associated with each combination of the experimental condition.

TABLE I

MEAN TIME-SCORES FOR TASK ELEMENTS
WITH BOTH MODES FOR THE TWO DISTANCES

	Pickup		Travel		Adjustment		Total	
Distance	Hand	Foot	Hand	Foot	Hand	Foot	Hand	Foot
40 Inches	7.59	7.55	7.21	6.63	5.34	5.17	12.55	11.81
80 Inches	8.63	7.44	15.09	15.62	11.16	11.77	26.25	27.39

*The arm did not stop moving the moment the indexing control was released because of inertia with the 6.2° per second rate. The inertia was even greater with the 11.4° per second rate.

TABLE II

MEAN TIME-SCORES FOR TASK ELEMENTS
WITH BOTH MODES FOR THE THREE SPEEDS

	Pickup		Travel		Adjustment		Total	
Speed	Hand	Foot	Hand	Foot	Hand	Foot	Hand	Foot
1	8.39	7.56	20.07	19.99	8.19	9.23	22.60	23.37
2	8.75	7.39	7.74	7.72	9.55	8.44	17.29	16.15
3	7.19	7.55	5.63	5.67	7.01	7.74	12.66	10.73

TABLE III

MEAN TIME-SCORES FOR TASK ELEMENTS
AT THE TWO DISTANCES FOR THE THREE SPEEDS

	Pickup		Travel		Adjustment		Total	
Speed	40 in.	80 in.	40 in.	80 in.	40 in.	80 in.	40 in.	80 in.
1	7.36	8.59	12.02	28.01	6.12	11.31	18.13	39.34
2	7.84	8.30	4.92	10.54	4.55	13.43	9.46	23.98
3	7.53	7.21	3.83	7.48	5.09	9.66	8.93	17.14

These data were subjected to analyses of variance to determine whether statistically significant effects of, or interactions among, the experimental variables used in this study existed. The results of these analyses are presented individually with respect to task elements:

Pickup Time

The movement from release of the cube to engaging the key-shaped object includes getting ready to activate the indexing mechanism—depending upon the trial either by foot pedal or finger trigger. Pickup time ceased at the moment of indexing actuation; i.e., no actual indexing was involved during pickup time. This "decision" time, as it varied for mode of indexing, was reflected in pickup time. In the summary analyses of variance (table IV), the F ratio for mode of operation is not significant. Total mean time for pickup in 72 trials was 8.11 seconds with the finger-trigger control and 7.5 seconds with the foot-pedal control.

TABLE IV

ANALYSIS OF VARIANCE
PICKUP TIME

Source	df	SS	MS	F	p
Between Subjects	23	839.40			
C (Distance)	1	7.58	7.58	0.20	NS
error (b)	22	831.92	37.81		
Within Subjects	120	594.85			
A (Rate)	2	13.58	6.79	1.45	NS
B (Mode)	1	13.45	13.45	2.89	NS
AB	2	18.60	9.30	1.99	NS
AC	2	14.34	7.17	1.54	NS
BC	1	11.98	11.98	2.57	NS
ABC	2	9.86	4.93	1.06	NS
error (w)	110	513.04	4.66		
Total	143	1434.25			

Travel Time

Analyses of the effects of variables (a) rate, (b) mode, and (c) distance on travel time result in significant F ratios for rate ($p < .01$), distance ($p < .01$), interaction of rate and distance ($p < .01$), and interaction of rate, distance, and mode ($p < .01$) (table V). Since travel time must vary with both rate and distance of travel, the significant effects of these two variables is not surprising. The significance of the interactions of (a) rate and distance and (b) rate, distance, and mode was unexpected (see figure 14).

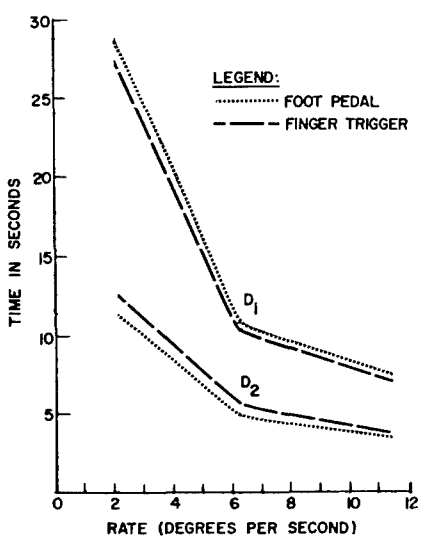

Figure 14. Mean Travel Time for All Subjects at Distance 1 (D_1, 80'' from hot cell mockup wall) and Distance 2 (D_2, 40'' from hot cell mockup wall)

TABLE V

ANALYSIS OF VARIANCE
TRAVEL TIME

Source	df	SS	MS	F	p
Between Subjects	23	2773.44			
C (Distance)	1	2558.85	2558.85	262.44	<.01
error (b)	22	214.59	9.75		
Within Subjects	120	7649.50			
A (Rate)	2	5794.51	2897.25	409.21	< .01
B (Mode)	1	0.02	0.02	0.003	NS
AB	2	0.08	0.04	0.006	NS
AC	2	472.41	236.20	33.40	< .01
BC	1	10.65	10.65	1.50	NS
ABC	2	593.03	296.51	41.87	< .01
error (w)	110	778.80	7.08		
Total	143	10422.94			

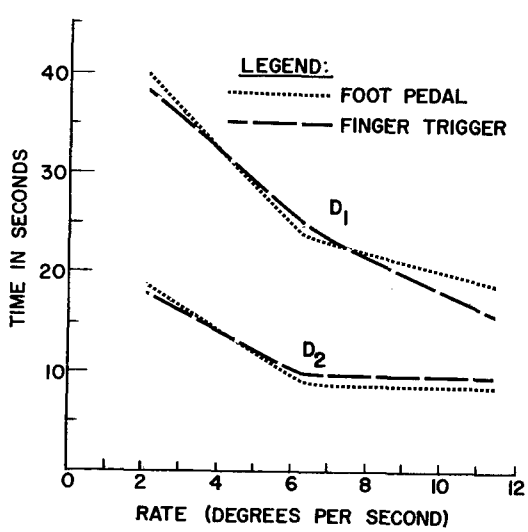

Figure 15. Mean Total Time for All Subjects at Distance 1 (D_1, 80'' from hot cell mockup wall) and Distance 2 (D_2, 40'' from hot cell mockup wall)

Adjustment Time

The summary analyses of the effects of the three variables on adjustment time (table VI) indicate there are no significant F ratios.

TABLE VI

ANALYSIS OF VARIANCE
ADJUSTMENT TIME

Source	df	SS	MS	F	p
Between Subjects	23	2559.00			
C (Distance)	1	1385.95	62.28	1.16	NS
error (b)	22	1173.05	53.32		
Within Subjects	120	3733.45			
A (Rate)	2	83.37	41.68	1.37	NS
B (Mode)	1	13.75	13.75	0.45	NS
AB	2	20.30	10.15	0.33	NS
AC	2	135.00	67.50	2.23	NS
BC	1	9.96	9.96	0.32	NS
ABC	2	36.40	18.20	0.60	NS
error (w)	110	3434.67	30.22		
Total	143	6292.45			

Total Time

Travel time and adjustment time were combined to form total indexing and positioning time. As indicated in the summary analyses of variance (table VII), the F ratios for the variables of rate and distance and for the interaction of rate and distance were significant ($p < .01$). Total time in relation to rate and distance is illustrated in figure 15.

TABLE VII

ANALYSIS OF VARIANCE
TOTAL TIME

Source	df	SS	MS	F	p
Between Subjects	23	8939.15			
C (Distance)	1	7718.79	7718.79	139.15	< .01
error (b)	22	1220.36	55.47		
Within Subjects	120	12122.18			
A (Rate)	2	6470.54	3235.27	78.31	< .01
B (Mode)	1	1.36	1.36	0.03	NS
AB	2	32.21	16.11	0.38	NS
AC	2	1012.06	506.03	12.24	< .01
BC	1	31.64	31.64	0.76	NS
ABC	2	30.32	15.16	0.36	NS
error (w)	110	4544.05	41.31		
Total	143	21061.33			

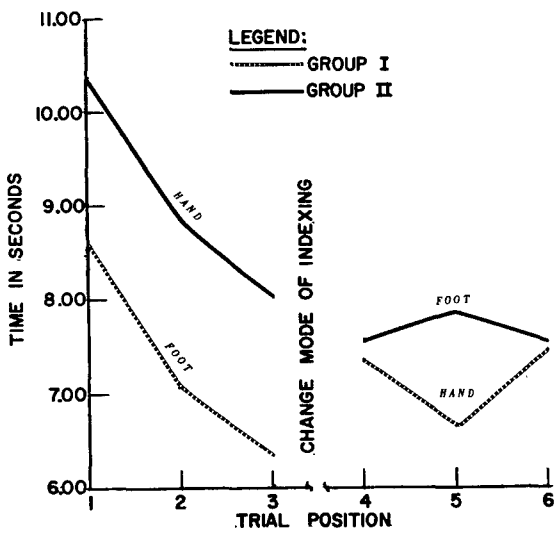

Figure 16. Mean Pickup Time by Trial Position

Trial Position

To study the effects of mode of indexing in further detail, breakdowns of pickup time and of adjustment time by trial position were analyzed. The curves of figure 16 reveal evidence of faster learning (to an asymptote of performance) with the foot control. However, only on the third trial was there a significant difference between pickup times for the two modes of indexing (foot control was faster in this instance—see table VIII). There are no significant differences due to the effects of mode of indexing in adjustment time at any trial position (see table IX). These results are illustrated in figure 17.

TABLE VIII

ANALYSIS OF POSITION EFFECT AND MODE OF INDEXING ON PICKUP TIME
(df = 24-2)

Position and Mode	Mean	SD	t-test	t	p
A H at 1	10.36	5.65	$t_{(A-J)}$	0.98	NS
B H at 2	8.86	5.55			
C H at 3	8.03	2.64	$t_{(B-K)}$	1.01	NS
D F at 4	7.59	1.89			
E F at 5	7.86	4.22	$t_{(C-L)}$	2.38	< .05
G F at 6	7.53	2.11			
J F at 1	8.59	2.04	$t_{(D-M)}$	0.31	NS
K F at 2	7.08	1.89			
L F at 3	6.34	0.99	$t_{(E-N)}$	0.92	NS
M H at 4	7.35	1.71			
N H at 5	6.65	1.19	$t_{(G-O)}$	0.12	NS
O H at 6	7.42	2.14			

TABLE IX

ANALYSIS OF POSITION EFFECT AND MODE OF INDEXING ON ADJUSTMENT TIME
(df = 24-2)

Position and Mode	Mean	SD	t-test	t	p
A H at 1	8.73	5.09	$t_{(A-J)}$	1.08	NS
B H at 2	7.46	5.34			
C H at 3	8.99	8.26	$t_{(B-K)}$	0.46	NS
D F at 4	7.87	6.75			
E F at 5	7.05	2.42	$t_{(C-L)}$	0.008	NS
G F at 6	4.92	2.38			
J F at 1	11.57	7.43	$t_{(D-M)}$	0.58	NS
K F at 2	10.67	23.25			
L F at 3	8.75	6.16	$t_{(E-N)}$	1.88	NS
M H at 4	9.31	5.33			
N H at 5	8.35	3.39	$t_{(G-O)}$	1.24	NS
O H at 6	6.65	4.22			

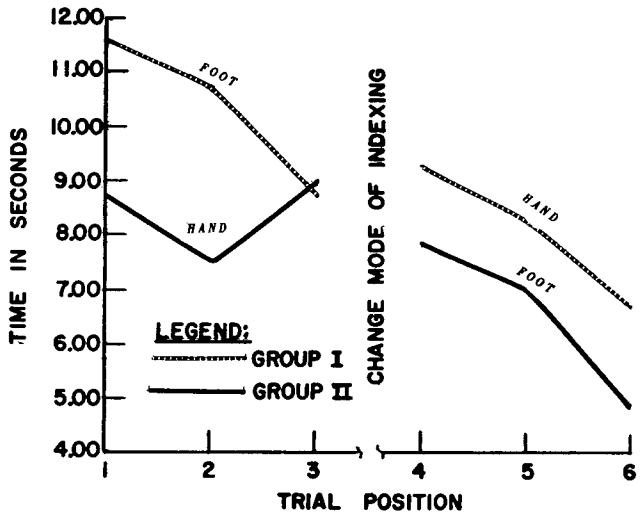

Figure 17. Mean Adjustment Time by Trial Position

Error

The χ^2 analysis of error frequencies (table X) shows a significant difference between modes of indexing as measured by the number of times the key-shaped object was dropped. In this respect, foot-pedal control was superior. The frequency of errors of direction was not significantly affected by mode of indexing.

TABLE X

CHI SQUARE ANALYSIS OF ERROR

	Hand	Foot	χ^2	p
Dropped Block	20	9	4.16	< .05
Wrong Direction	11	7	0.88	NS

DISCUSSION

Generally, this study shows that, in the case of remote manipulation of objects, body members other than the hands can be used for what, in this case, might be referred to as essentially "hand operations." In other words, strict correspondence between the master hand and slave hand (especially in referring to design characteristics of the master control resembling the hand) is not necessary. This conclusion is supported by performance being better with foot indexing during pickup time (see figure 16 and table VIII) and error (measured in terms of dropping blocks) being significantly greater for finger-trigger control than for foot-pedal control. Master and slave correspondence (in design and performance) might not even be desirable.

As the variables affecting performance during adjustment could not be precisely controlled, there was great variability in adjustment times. Individual differences between subjects' handling techniques were so great that the effects on adjustment time of variation in rate of indexing could not be evaluated.

Travel time is a function of indexing rate and task distance. The significant interaction between rate and distance (see table V) reflects the fact that the fastest rate (11.4°/second) was not so advantageous for short-distance tasks as for those involving greater distances.* Therefore, any further increase in rate would be unnecessary as far as time to position objects short distances is concerned.

CONCLUSIONS

In the study of the variables—mode of indexing actuation, rate of angular indexing, and task distance for remote-handling operations—we found that, in terms of speed of performance, foot-pedal and finger-trigger controls of angular indexing were equal. However, rate of learning and accuracy of performance were greater with foot-pedal actuation. Task efficiency, measured in speed of performance, increased directly with indexing speed at far-task distance. This effect was not noted at near distance. As a result, a variable-speed, indexing-actuation device is suggested for tasks involving mixed distances. Automatic positioning devices used in connection with remote manipulators should incorporate features which will give the operator the greatest possible range of operating speeds commensurate with practical considerations of the work situation.

*The indexing rates used were the minimum and maximum rates for the model 8 manipulator.

BIBLIOGRAPHY

1. Baker, D.F., and B.M. Crawford, Range Limitations of the CRL Model 8 Master-Slave Manipulator with the Seated Operator, Wright Air Development Center Technical Note 59-359, Wright-Patterson Air Force Base, Ohio, October 1959.

2. Barnes, R.M., Motion and Time Study, John Wiley and Sons, Inc., New York, 1958.

3. Bennett, W., Some Man Machine Problems in Remote Handling Equipment, AFSWC Technical Note 59-24, Kirtland Air Force Base, New Mexico, August 1959.

4. Crawford, B.M., and D.F. Baker, Human Factors in Remote Handling: Survey and Bibliography, WADD Technical Report 60-476, Wright-Patterson Air Force Base, Ohio, July 1960.

5. "Ersatz Hands: Electronically Controlled Force Reflecting Manipulators," Nucleonics, Vol 46, p 37, November 1952.

6. "Extra-Maneuverable Manipulator: Knolls Atomic Power Laboratory," Product Engineering, Vol 26, pp 140-143, May 1955.

7. Field, R.E., and J.F. Gifford, Development of the Hanford Slave Manipulator for Use in the Multicurie Cells at Hanford, HW-26175, Hanford Works, Richland, Washington, October 1952.

8. Goertz, R.C., "(U) Fundamentals of General-Purpose Manipulators and Robots," 2nd Information Meeting; Hot Laboratories and Equipment, CF-52-10-230, Oak Ridge National Laboratory, Oak Ridge, Tennessee, October 1952 (SECRET report).

9. Jenkins, W.L., and M.B. Connor, "Some Design Factors in Making Settings on a Linear Scale," Journal of Applied Psychology, Vol 33, pp 395-409, August 1949.

10. Pesenti, P., and G. Cherel, "French Master Slaves," Supplement to the Proceedings of the Seventh Hot Laboratories and Equipment Conference, Cleveland, Ohio, April 1959.

11. "Remote-Handling Tool," Nuclear Energy Engineer, Vol 13, p 604, December 1959.

12. Stang, L.G., Jr. (Editorial Coordinator), Hot Laboratory Equipment, Second Edition, Technical Information Service, U.S. Atomic Energy Commission, Washington, D.C., April 1958.

13. Stevens, S.S., Handbook of Experimental Psychology, p 1324, John Wiley and Sons, Inc., New York, 1951.

APPENDIX I

ORDER OF RATE, MODE, AND DISTANCE FOR EACH SUBJECTS*

Subjects	Hand			Foot		
	Rate			Rate		
1	1	2	3	3	1	2
3	3	1	2	2	3	1
5	2	3	1	1	2	3
7	1	2	3	3	1	2
9	3	1	2	2	3	1
11	2	3	1	1	2	3
	Foot			Hand		
	Rate			Rate		
2	3	2	1	1	3	2
4	2	1	3	3	2	1
6	1	3	2	2	1	3
8	3	2	1	1	3	2
10	2	1	3	3	2	1
12	1	3	2	2	1	3

Subjects	Hand			Foot		
	Rate			Rate		
14	2	3	1	1	2	3
16	1	2	3	3	1	2
18	3	1	2	2	3	1
20	2	3	1	1	2	3
22	1	2	3	3	1	2
24	3	1	2	2	3	1
	Foot			Hand		
	Rate			Rate		
13	2	1	3	3	2	1
15	1	3	2	2	1	3
17	3	2	1	1	3	2
19	2	1	3	3	2	1
21	1	3	2	2	1	3
23	3	2	1	1	3	2

*Subjects 1-12 performed the task at the 80-inch distance and subjects 13-24 performed the task at the 40-inch distance. Rate 1 = 2.1° per second, rate 2 = 6.2° per second, and rate 3 = 11.4° per second.

APPENDIX II

TASK BREAKDOWN BY ELEMENT

Element 1

Right hand picks up object (small spherical shape, within circle pattern right)

Transfer object to left hand

Left hand places object within circle pattern left

Element 2

Left hand picks up object (small block, within square pattern left)

Transfer object to right hand

Right hand places object within square pattern right

AS MANIPULATOR HANDS RELEASE BLOCK, TIME STARTS FOR "TRAVEL TIME."

Element 3

Right hand picks up key object

Index (either by foot actuation or by finger actuation, at one of three designated speeds—see raw data sheets) to key cutout pattern

IF ADJUSTMENT BY INDEXING IS NEEDED, TIME STARTS FOR "ADJUSTMENT TIME."

Aerospace Medical Division, 6570th
Aerospace Medical Research Laboratories,
Wright-Patterson AF Base, Ohio.
Rpt No. ASD TR 61-626. REMOTE-HANDLING TASK PERFORMANCE AS A FUNCTION OF INDEXING VARIABLES. Final report, Dec 61, iii + 23p. incl illus., tables, 13 refs.
Unclassified report

Three variables in remote-handling operations were studied: mode of indexing actuation, rate of angular indexing, and task distance. A CRL Model 8 Master Slave Manipulator was used by subjects performing a positioning task which required angular indexing (mechanical motion was locked in the Y axis). Actuation of indexing was either by

(over)

UNCLASSIFIED

1. Remote Handling (Slave Manipulator)
2. Motor Reactions
3. Psychomotor Tests
4. Applied Psychology
5. Control Configuration

I. Project 7184, Task 718407
II. Behavioral Sciences Laboratory
III. Lt. D. F. Baker
IV. In ASTIA collection
V. Aval fr OTS: $.75

UNCLASSIFIED

a finger trigger or a foot pedal, and at one of three different indexing speeds. The task involved positioning objects at one of two distances from the operator. In terms of speed of performance, the foot-pedal and finger-trigger controls were equal. However, rate of learning and accuracy of performance were greater with foot-pedal actuation. Task efficiency, measured in speed of performance, increased directly with indexing speed at the far-task distance. This effect was not noted at the near distance.

UNCLASSIFIED

UNCLASSIFIED

Aerospace Medical Division, 6570th
Aerospace Medical Research Laboratories,
Wright-Patterson AF Base, Ohio.
Rpt No. ASD TR 61-626. REMOTE-HANDLING TASK PERFORMANCE AS A FUNCTION OF INDEXING VARIABLES. Final report, Dec 61, iii + 23p. incl illus., tables, 13 refs.
Unclassified report

Three variables in remote-handling operations were studied: mode of indexing actuation, rate of angular indexing, and task distance. A CRL Model 8 Master Slave Manipulator was used by subjects performing a positioning task which required angular indexing (mechanical motion was locked in the Y axis). Actuation of indexing was either by

(over)

UNCLASSIFIED

1. Remote Handling (Slave Manipulator)
2. Motor Reactions
3. Psychomotor Tests
4. Applied Psychology
5. Control Configuration

I. Project 7184, Task 718407
II. Behavioral Sciences Laboratory
III. Lt. D. F. Baker
IV. In ASTIA collection
V. Aval fr OTS: $.75

UNCLASSIFIED

a finger trigger or a foot pedal, and at one of three different indexing speeds. The task involved positioning objects at one of two distances from the operator. In terms of speed of performance, the foot-pedal and finger-trigger controls were equal. However, rate of learning and accuracy of performance were greater with foot-pedal actuation. Task efficiency, measured in speed of performance, increased directly with indexing speed at the far-task distance. This effect was not noted at the near distance.

UNCLASSIFIED

UNCLASSIFIED

Aerospace Medical Division, 6570th Aerospace Medical Research Laboratories, Wright-Patterson AF Base, Ohio.
Rpt No. ASD TR 61-626. REMOTE-HANDLING TASK PERFORMANCE AS A FUNCTION OF INDEXING VARIABLES. Final report, Dec 61, iii + 23p. incl illus., tables, 13 refs.
Unclassified report

Three variables in remote-handling operations were studied: mode of indexing actuation, rate of angular indexing, and task distance. A CRL Model 8 Master Slave Manipulator was used by subjects performing a positioning task which required angular indexing (mechanical motion was locked in the Y axis). Actuation of indexing was either by

(over)

UNCLASSIFIED

1. Remote Handling (Slave Manipulator)
2. Motor Reactions
3. Psychomotor Tests
4. Applied Psychology
5. Control Configuration

I. Project 7184, Task 718407
II. Behavioral Sciences Laboratory
III. Lt. D. F. Baker
IV. In ASTIA collection
V. Aval fr OTS: $.75

UNCLASSIFIED

a finger trigger or a foot pedal, and at one of three different indexing speeds. The task involved positioning objects at one of two distances from the operator. In terms of speed of performance, the foot-pedal and finger-trigger controls were equal. However, rate of learning and accuracy of performance were greater with foot-pedal actuation. Task efficiency, measured in speed of performance, increased directly with indexing speed at the far-task distance. This effect was not noted at the near distance.

UNCLASSIFIED

UNCLASSIFIED

Aerospace Medical Division, 6570th Aerospace Medical Research Laboratories, Wright-Patterson AF Base, Ohio.
Rpt No. ASD TR 61-626. REMOTE-HANDLING TASK PERFORMANCE AS A FUNCTION OF INDEXING VARIABLES. Final report, Dec 61, iii + 23p. incl illus., tables, 13 refs.
Unclassified report

Three variables in remote-handling operations were studied: mode of indexing actuation, rate of angular indexing, and task distance. A CRL Model 8 Master Slave Manipulator was used by subjects performing a positioning task which required angular indexing (mechanical motion was locked in the Y axis). Actuation of indexing was either by

(over)

UNCLASSIFIED

1. Remote Handling (Slave Manipulator)
2. Motor Reactions
3. Psychomotor Tests
4. Applied Psychology
5. Control Configuration

I. Project 7184, Task 718407
II. Behavioral Sciences Laboratory
III. Lt. D. F. Baker
IV. In ASTIA collection
V. Aval fr OTS: $.75

UNCLASSIFIED

a finger trigger or a foot pedal, and at one of three different indexing speeds. The task involved positioning objects at one of two distances from the operator. In terms of speed of performance, the foot-pedal and finger-trigger controls were equal. However, rate of learning and accuracy of performance were greater with foot-pedal actuation. Task efficiency, measured in speed of performance, increased directly with indexing speed at the far-task distance. This effect was not noted at the near distance.

UNCLASSIFIED

UNCLASSIFIED

Aerospace Medical Division, 6570th Aerospace Medical Research Laboratories, Wright-Patterson AF Base, Ohio.
Rpt No. ASD TR 61-626. REMOTE-HANDLING TASK PERFORMANCE AS A FUNCTION OF INDEXING VARIABLES. Final report, Dec 61, iii + 23p. incl illus., tables, 13 refs.
Unclassified report

Three variables in remote-handling operations were studied: mode of indexing actuation, rate of angular indexing, and task distance. A CRL Model 8 Master Slave Manipulator was used by subjects performing a positioning task which required angular indexing (mechanical motion was locked in the Y axis). Actuation of indexing was either by

(over)

UNCLASSIFIED

1. Remote Handling (Slave Manipulator)
2. Motor Reactions
3. Psychomotor Tests
4. Applied Psychology
5. Control Configuration

I. Project 7184, Task 718407
II. Behavioral Sciences Laboratory
III. Lt. D. F. Baker
IV. In ASTIA collection
V. Aval fr OTS: $.75

UNCLASSIFIED

a finger trigger or a foot pedal, and at one of three different indexing speeds. The task involved positioning objects at one of two distances from the operator. In terms of speed of performance, the foot-pedal and finger-trigger controls were equal. However, rate of learning and accuracy of performance were greater with foot-pedal actuation. Task efficiency, measured in speed of performance, increased directly with indexing speed at the far-task distance. This effect was not noted at the near distance.

UNCLASSIFIED

UNCLASSIFIED

Aerospace Medical Division, 6570th Aerospace Medical Research Laboratories, Wright-Patterson AF Base, Ohio.
Rpt No. ASD TR 61-626. REMOTE-HANDLING TASK PERFORMANCE AS A FUNCTION OF INDEXING VARIABLES. Final report, Dec 61, iii + 23p. incl illus., tables, 13 refs.
Unclassified report

Three variables in remote-handling operations were studied: mode of indexing actuation, rate of angular indexing, and task distance. A CRL Model 8 Master Slave Manipulator was used by subjects performing a positioning task which required angular indexing (mechanical motion was locked in the Y axis). Actuation of indexing was either by

(over)

UNCLASSIFIED

1. Remote Handling (Slave Manipulator)
2. Motor Reactions
3. Psychomotor Tests
4. Applied Psychology
5. Control Configuration

I. Project 7184, Task 718407
II. Behavioral Sciences Laboratory
III. Lt. D. F. Baker
IV. In ASTIA collection
V. Aval fr OTS: $.75

UNCLASSIFIED

a finger trigger or a foot pedal, and at one of three different indexing speeds. The task involved positioning objects at one of two distances from the operator. In terms of speed of performance, the foot-pedal and finger-trigger controls were equal. However, rate of learning and accuracy of performance were greater with foot-pedal actuation. Task efficiency, measured in speed of performance, increased directly with indexing speed at the far-task distance. This effect was not noted at the near distance.

UNCLASSIFIED

UNCLASSIFIED

Aerospace Medical Division, 6570th Aerospace Medical Research Laboratories, Wright-Patterson AF Base, Ohio.
Rpt No. ASD TR 61-626. REMOTE-HANDLING TASK PERFORMANCE AS A FUNCTION OF INDEXING VARIABLES. Final report, Dec 61, iii + 23p. incl illus., tables, 13 refs.
Unclassified report

Three variables in remote-handling operations were studied: mode of indexing actuation, rate of angular indexing, and task distance. A CRL Model 8 Master Slave Manipulator was used by subjects performing a positioning task which required angular indexing (mechanical motion was locked in the Y axis). Actuation of indexing was either by

(over)

UNCLASSIFIED

1. Remote Handling (Slave Manipulator)
2. Motor Reactions
3. Psychomotor Tests
4. Applied Psychology
5. Control Configuration

I. Project 7184, Task 718407
II. Behavioral Sciences Laboratory
III. Lt. D. F. Baker
IV. In ASTIA collection
V. Aval fr OTS: $.75

UNCLASSIFIED

a finger trigger or a foot pedal, and at one of three different indexing speeds. The task involved positioning objects at one of two distances from the operator. In terms of speed of performance, the foot-pedal and finger-trigger controls were equal. However, rate of learning and accuracy of performance were greater with foot-pedal actuation. Task efficiency, measured in speed of performance, increased directly with indexing speed at the far-task distance. This effect was not noted at the near distance.

UNCLASSIFIED

UNCLASSIFIED

Aerospace Medical Division, 6570th Aerospace Medical Research Laboratories, Wright-Patterson AF Base, Ohio.
Rpt No. ASD TR 61-626. REMOTE-HANDLING TASK PERFORMANCE AS A FUNCTION OF INDEXING VARIABLES. Final report, Dec 61, iii + 23p. incl illus., tables, 13 refs.
Unclassified report

Three variables in remote-handling operations were studied: mode of indexing actuation, rate of angular indexing, and task distance. A CRL Model 8 Master Slave Manipulator was used by subjects performing a positioning task which required angular indexing (mechanical motion was locked in the Y axis). Actuation of indexing was either by

(over)

UNCLASSIFIED

1. Remote Handling (Slave Manipulator)
2. Motor Reactions
3. Psychomotor Tests
4. Applied Psychology
5. Control Configuration

I. Project 7184, Task 718407
II. Behavioral Sciences Laboratory
III. Lt. D. F. Baker
IV. In ASTIA collection
V. Aval fr OTS: $.75

UNCLASSIFIED

a finger trigger or a foot pedal, and at one of three different indexing speeds. The task involved positioning objects at one of two distances from the operator. In terms of speed of performance, the foot-pedal and finger-trigger controls were equal. However, rate of learning and accuracy of performance were greater with foot-pedal actuation. Task efficiency, measured in speed of performance, increased directly with indexing speed at the far-task distance. This effect was not noted at the near distance.

UNCLASSIFIED

UNCLASSIFIED