UNCLASSIFIED

AD NUMBER

AD241228

NEW LIMITATION CHANGE

TO

Approved for public release, distribution unlimited

FROM

Distribution authorized to U.S. Gov't. agencies and their contractors; Operational and administrative use; Dec 1959. Other requests shall be referred to Air Force Cambridge Research Center, Washington, DC.

AUTHORITY

AFCRL ltr, 8 Mar 1967

THIS PAGE IS UNCLASSIFIED

UNCLASSIFIED

AD 241228

Reproduced
by the

ARMED SERVICES TECHNICAL INFORMATION AGENCY
ARLINGTON HALL STATION
ARLINGTON 12, VIRGINIA

Reproduced From
Best Available Copy

This document contains
blank pages that were
not filmed

UNCLASSIFIED

REPRODUCTION QUALITY NOTICE

This document is the best quality available. The copy furnished to DTIC contained pages that may have the following quality problems:

- Pages smaller or larger than normal.
- Pages with background color or light colored printing.
- Pages with small type or poor printing; and or
- Pages with continuous tone material or color photographs.

Due to various output media available these conditions may or may not cause poor legibility in the microfiche or hardcopy output you receive.

☐ If this block is checked, the copy furnished to DTIC contained pages with color printing, that when reproduced in Black and White, may change detail of the original copy.

NOTICE: When government or other drawings, specifications or other data are used for any purpose other than in connection with a definitely related government procurement operation, the U. S. Government thereby incurs no responsibility, nor any obligation whatsoever; and the fact that the Government may have formulated, furnished, or in any way supplied the said drawings, specifications, or other data is not to be regarded by implication or otherwise as in any manner licensing the holder or any other person or corporation, or conveying any rights or permission to manufacture, use or sell any patented invention that may in any way be related thereto.

241328

TECHNICAL REPORT: PHYSICAL ELECTRONICS

GENERAL RESEARCH IN DIFFRACTION THEORY

VOLUME 1

ASTIA
RECEIVED
AUG 19 1960
TIPDR A

LMSD-288087

DECEMBER 1959

TECHNICAL REPORT: PHYSICAL ELECTRONICS

GENERAL RESEARCH IN DIFFRACTION THEORY

VOLUME I

BY
NELSON A. LOGAN

LMSD-288087 DECEMBER 1959

WORK CARRIED OUT AS PART OF THE LOCKHEED GENERAL RESEARCH PROGRAM UNDER THE SPONSORSHIP OF THE UNITED STATES GOVERNMENT

Lockheed

MISSILES and SPACE DIVISION

LOCKHEED AIRCRAFT CORPORATION • SUNNYVALE, CALIF.

NOTICE

QUALIFIED REQUESTERS MAY OBTAIN COPIES OF THIS REPORT FROM THE ARMED SERVICES TECHNICAL INFORMATION AGENCY (ASTIA). DEPARTMENT OF DEFENSE CONTRACTORS MUST BE ESTABLISHED FOR ASTIA SERVICES, OR HAVE THEIR NEED-TO-KNOW CERTIFIED BY THE MILITARY AGENCY COGNIZANT OF THEIR CONTRACT.

THIS REPORT HAS BEEN RELEASED TO THE OFFICE OF TECHNICAL SERVICES, DEPARTMENT OF COMMERCE, WASHINGTON 25, D.C., FOR SALE TO THE GENERAL PUBLIC.

PREFACE

Two of the most difficult problems in applied electromagnetics are those of predicting the scattering characteristics of the convex metallic surfaces of radar targets and of predicting the radiation properties of antennas mounted on, or near, such surfaces. The Theoretical Analysis Section of the Electromagnetics Department is engaged in the development of numerical methods for the computation of these diffraction phenomena. With the aid of tables of certain new fundamental functions, the solution of many of these problems can now be treated by a ray-tracing procedure which is a logical extension of classical geometrical and physical optics. This report is the first of a series of reports on the theory and applications of these functions.

The first volume is primarily concerned with the development of the mathematical tools to be employed in the applications which will be discussed in later volumes. Emphasis is placed upon the definition of, and derivation of properties of, a class of diffraction integrals which are related to solutions of the parabolic partial differential equation $U_{yy} + iU_x + yU = 0$. The recent work of the Soviet physicist V. A. Fock, the earlier work of van der Pol and Bremmer, and a number of other classic results in diffraction theory are shown to be special cases of the general theory which is developed.

The second volume will consist of tables and graphs of the diffraction integrals, and will also include certain auxiliary tables which facilitate the computation of the class of functions discussed in the first volume. In the third volume, the classical exact solutions for spheres and cylinders will be expressed in the form of asymptotic expansions in which the coefficients are expressed in terms of the functions defined and studied in the first volume. A sample of the results to be

obtained in the third volume is given in Section 18 of the first volume. These asymptotic expansions lend readily to numerical results, whereas the exact solutions converge too slowly to be used for numerical purposes when the radii of curvature greatly exceeds the wavelength. This approach is only useful, however, when the exact solution is already known.

A perturbation procedure will be used in the fourth volume to rederive some of the results of the third volume without recourse to the exact solutions. The analysis will then be extended to certain geometries for which exact solutions are not readily obtained. Further applications and generalizations will be given in later volumes in this series.

The development of the properties of the diffraction integrals in the first volume has been patterned after the classical treatments of Bessel functions, Legendre polynomials, and similar special functions in physics. The mathematical physicists of the 19th century boldly introduced these classical special functions and thereby laid a firm foundation for 20th century research in boundary value problems for spheres and circular cylinders. However, most of the practical problems in diffraction theory lie in the so-called "high frequency" region where the classical solutions fail to converge readily to yield numerical results. During the last fifty years many authors have sought to provide methods for the evaluation of these problems in which the size of the diffracting obstacle is large compared to wavelength. As long ago as 1914, Love (Ref. 28) surveyed this field and wrote, "Unfortunately, the question has been investigated by different methods without adequate co-ordination and the results that have been obtained are somewhat discordant." The difficulties of the problem of co-ordination has been further enhanced in recent years by the increased activity in this field which have been created primarily by applications of diffraction theory to the radiation and scattering of microwaves. We have compared the notations of some of the leading authors and have introduced a set of standard notations. We have tried to recapture some of the spirit of the classicists of the nineteenth century by systematically developing a thorough knowledge of representations and properties of the functions.

The derivations may, at first reading, create the impression of constituting interesting exercises in advanced calculus. We readily admit that we enjoyed these exercises, and we invite our readers to join us in later volumes to witness the numerous applications which can be made with the results of these exercises.

The size and complexity of our compilation makes it vain to hope that errors of judgement, or mistakes have been avoided. We will be glad to receive corrections or suggestions which can be employed in our future work in this field.

ABSTRACT

This study involves a generalization of the ray-tracing techniques of geometrical optics through the introduction of a class of universal functions which can be used to predict the amplitude and phase of an electromagnetic wave reflected or diffracted by a convex metallic surface. These diffraction integrals are generalizations of functions previously used in studies of radio-wave propagation around the earth's surface by van der Pol, Bremmer, Pryce, Fock, Pekeris, Rice and other recent authors. The functions are defined as Fourier integrals having combinations of Airy integrals in the integrands. The Airy integrals, and particularly the history of notations for these functions are discussed in considerable detail. The present study differs from other studies in that it emphasizes the role played by the Taylor and Laurent expansions for these functions. The difficult "transition" regions are readily handled by summing certain divergent series by means of classical summation techniques.

Asymptotic expansions of radiation fields from slot antennas on a circular cylinder are presented as an example of the application of these integrals.

ACKNOWLEDGMENTS

Many of the methods and concepts employed in this report were learned or conceived while the author was a member of the staff of the Air Force Cambridge Research Center during 1954-1957. The author is indebted to his former associates, particularly R. E. Hiatt and C. J. Sletten, for their encouragement and support of this research during this study phase. The author wishes to express his thanks to A. S. Dunbar for his support, encouragement, and helpful suggestions during the course of this work at LMSD.

The results summarized in this report represent a large investment of efforts by many persons. In the early stages of this work, the author received analytical and computational assistance from M. E. Sherry, R. B. Mack, G. E. Reynolds, M. A. Hoes, L. Bastian, and P. Donovan of the Air Force Cambridge Research Center. Two AFCRC contractors, the Parke Mathematical Laboratories and the Datamatic Corporation, also contributed to the studies made by the author prior to joining LMSD in early 1958.

The coefficients in the Taylor series for $f(\xi)$, $g(\xi)$, $p(\xi)$, $q(\xi)$ were evaluated during the second half of 1958 by B. L. Gardner and R. L. Mason. The asymptotic expansions of these functions were obtained during this same time with the assistance of M. A. Festa. Properties and representations of $f_n(\xi)$ and $g_n(\xi)$ have been obtained with the collaboration of J. G. Hillhouse. Similar studies of $r_n(\xi)$ and $s_n(\xi)$ were made with the collaboration of R. L. Mason. The asymptotic expansions in Section 18 were obtained by K. S. Yee and A. F. Riedel. Additional valuable assistance in the form of computations, preparation of tables, and curve plotting has been given by D. W. Gillett and P. M. Pelster. The thoroughness with which we have sought to treat these functions would not have been possible without the cheerful

cooperation of these individuals. The casual way in which we present some properties [such as those in Eqs. (15.33) through (15.42)] has concealed the fact that many hours of tedious algebraic manipulation have been necessary to arrive at the stated result. The readers of this report who are familiar with these tedious steps will appreciate the valuable contributions of these collaborators.

The computation of the coefficients in the Taylor series for the current distribution and reflection coefficient functions would not have been possible without the cooperation of J. C. P. Miller of Cambridge University (England) who supplied us with some unpublished data pertaining to the Airy integral. He also put us in touch with P. H. Haines and G. F. Miller at National Physical Laboratory (Teddington, England) who then completed and passed on to us the valuable constants contained in Tables 3 and 4. We are indebted to the Director of National Physical Laboratory for permission to include these unpublished results in this report.

Thanks are also due the International Business Machines Corporation (San Francisco) for their assistance in the preparation of Tables 12, 13, 17, and 18 which were computed on the IBM 610 electronic computer.

E. A. Blasi has been largely responsible for the creation of the favorable environment in which this work has been conducted.

The author is pleased to acknowledge the considerable contribution of G. Unikel and W. B. Telfer, who edited the manuscript, and D. M. Price and V. C. Sholaas, who prepared the typescript from which the report was reproduced by a photo-offset process.

The work leading to this report has been carried out under the Lockheed General Research Program.

CONTENTS

Section		
	PREFACE	iii
	ABSTRACT	vii
	ACKNOWLEDGMENTS	ix
	LIST OF ILLUSTRATIONS	xiii
	LIST OF TABLES	xv
	NOTATION	xix
1	GEOMETRY OF DIFFRACTION PROBLEMS	1-1
2	LIMITATIONS OF THE CLASSICAL THEORY OF GEOMETRICAL OPTICS	2-1
3	A MATHEMATICAL MODEL DISPLAYING CHARACTERISTICS OF DIFFRACTION PHENOMENA	3-1
4	NOTATION FOR THE DIFFRACTION FORMULA	4-1
5	NOTATION FOR ASYMPTOTIC ESTIMATES FOR THE BESSEL FUNCTIONS IN THE TRANSITION REGION	5-1
6	HISTORY OF NOTATION FOR TRANSITION REGION FORMULAE	6-1
7	STANDARD NOTATION AND TERMINOLOGY FOR DIFFRACTION FUNCTIONS	7-1
8	ALTERNATIVE PATHS OF INTEGRATION	8-1
9	ALTERNATIVE REPRESENTATIONS FOR THE INTEGRALS $u(\xi)$, $v(\xi)$	9-1
10	ASYMPTOTIC EXPANSIONS FOR THE INTEGRALS f, g, $\hat{p}$, $\hat{q}$	10-1
11	SOME REMARKS OF THE EVALUATION OF f, g, $\hat{p}$, $\hat{q}$, FOR MODERATE VALUES OF ξ	11-1
12	SERIES EXPANSIONS FOR f, g, p, q	12-1
13	FURTHER REPRESENTATIONS OF $f(\xi)$, $g(\xi)$, $p(\xi)$, $q(\xi)$	13-1
14	RELATIONS BETWEEN THE INTEGRALS	14-1

Section		Page
15	REPRESENTATIONS FOR GENERALIZED INTEGRALS	15-1
	15.1 The Integrals $J_n(\xi)$	15-17
	15.2 The Integrals $K_n(\xi)$	15-19
	15.3 The Integrals $f_n(\xi)$	15-24
	15.4 The Integrals $g_n(\xi)$	15-31
	15.5 The Integrals $r_n(\xi)$	15-41
	15.6 The Integrals $s_n(\xi)$	15-51
16	A HISTORY OF FOCK'S INTEGRAL $V_1(z, q)$	16-1
17	DERIVATION OF $V_0(\xi, q)$ and $V_1(\xi, q)$ AS SOLUTIONS OF INTEGRAL EQUATIONS	17-1
18	SOME APPLICATIONS TO ASYMPTOTIC EXPANSIONS OF INTEGRALS DESCRIBING RADIATION PATTERNS OF SLOT ANTENNAS	18-1
19	REFERENCES	19-1

LIST OF ILLUSTRATIONS

Figure		Page
1	The Mechanism of Diffraction (after Booker and Walkinshaw)	1-2
2	Geometry of the Radio Problem	1-3
3	Geometry of the Optics Problems	1-4
4	Definitions of T_1, T_2, S for Shadow Region	1-5
5	Definitions of T_1, T_2, S for Line of Sight Region	1-6
6	Definitions of R, D_1, D_2 and α, β, γ	1-7
7	Definition of Collision Parameter b	1-7
8	Discontinuity in Electrical Properties	2-2
9	Definition of Virtual Angles of Incidence and Reflection	3-9
10	Behavior of $\chi'(t)$, $\psi'(t)$ for Real Values of t	4-13
11	The Airy Integrals Ai(x) and Bi(x)	4-22
12	The Airy Integrals Ai'(x) and Bi'(x)	4-23
13	Behavior of Airy Functions on the Rays Argument $t = \frac{n\pi}{3}$, $\tau = \text{Mod}\, t$	8-2
14	The Contour L	8-4
15	Behavior of $\lvert Ai(x) \rvert$ in Complex Plane	8-10
16	Behavior of $\lvert Ai(x) \rvert$ in Complex Plane	8-11
17	Behavior of $y(t) = \frac{\exp(-i3t)}{Bi(t) + iAi(t)}$	11-6
18	Dipole on a Spherical Surface	16-1
19	Plane Wave Incident on a Convex Surface	16-4
20	Direct and Diffracted Waves in Illuminated Region	18-2
21	Diffracted Waves in the Shadow Region	18-3

LIST OF TABLES

Number		Page
1	$X\ 20 \log_{10} \lvert w_1 \rvert$	3-6
2	Samples of Miller's Tables of F, χ, G, ψ	4-12
3	Roots and Turning Values of $Ai(-\alpha)$	4-20
4	Roots and Turning Values of $Ai'(-\beta)$	4-20
5	Roots and Turning Values for $A(q)$, $A'(q)$	5-9
6	Table of Bremmer's Constants $\lvert \tau_s \rvert$	5-12
7	Values of A_n, B_n Occuring in Asymptotic Expansions of Logarithmic Derivations of $Ai(\alpha)$, $Ai'(\alpha)$	9-3
8	Table of $A_r^{(n)}$	10-9
9	Table of $B_r^{(n)}$	10-9
10	Table of $C_r^{(n)}$	10-10
11	Table of $D_r^{(n)}$	10-11
12	Table of $\dfrac{\alpha_s^{(n)}}{Ai'(-\alpha_s)}$	12-4
13	Table of $\dfrac{\beta_s^{(n-1)}}{\beta_s Ai(-\beta_s)}$	12-8
14	Computation of $\left\lvert \exp\left[-i(5n-2)\pi/6\right] f^{(n)}(0) \right\rvert$	12-14
15	Computation of $\left\lvert \exp\left(-i\ \dfrac{5\pi n}{6}\right) g^{(n)}(0) \right\rvert$	12-15
16	Values of E_n	12-16

Number		Page
17	Table of $\dfrac{\alpha_s^{(n)}}{[Ai'(-\alpha_s)]^2}$	12-19
18	Table of $\dfrac{\beta_s^{(n)}}{\beta_s [Ai(-\beta_s)]^2}$	12-23
19	Computation of $\left\{\exp[-i(n+1)\pi/3] M_n\right\}$ Method A	12-27
20	Computation of $\left\{\exp[-i(n+1)\pi/3] N_n\right\}$ Method A	12-28
21	Table of Euler Maclaurin Coefficients	12-29
22	Computation of $\left\{\exp[-i(n+1)\pi/3] M_n\right\}$ Method B	12-32
23	Computation of $\left\{\exp[-i(n+1)\pi/3] N_n\right\}$ Method B	12-33
24	Table of Taylor Coefficients γ_n, δ_n for the Function $f^{(r)}(\xi)$	13-15
25	Table of Taylor Coefficients α_n, β_n for the Function $g^{(r)}(\xi)$	13-17
26	Table of Taylor Coefficients c_n, d_n for the Function $p^{(r)}(\xi)$	13-19
27	Table of Taylor Coefficients a_n, b_n for the Function $q^{(r)}(\xi)$	13-22

Number		Page
28	Table of Coefficients $A_m^{(n)}$ for Asymptotic Expansion of $f^{(n)}(\xi)$	15-28
29	Table of Coefficients $A_m^{(n)}$ for Asymptotic Expansion of $g^{(n)}(\xi)$	15-36
30	Table of Coefficients $A_m^{(n)}$ for Asymptotic Expansion of $\hat{p}^{(n)}(-x)$	15-46
31	Table of Coefficients $A_m^{(n)}$ for Asymptotic Expansion of $\hat{q}^{(n)}(-x)$	15-57
32	Converson of $G(p)$ to $f(\xi)$	16-14
33	Values of α and Λ Studied by Wait	16-17

NOTATION

As it is impossible to avoid using a large number of different symbols during the course of the work, some of the symbols used most frequently, together with their definitions (or references to figures or equations in the text which define them), are listed here for the convenience of the reader.

ω	angular frequency
λ	wavelength
k	propagation constant $(2\pi/\lambda)$
a	radius of the convex surface
r, ϕ	cylindrical polar coordinates, referred to center of curvature (Fig. 3)
r_1	distance of source from center of curvature (Fig. 3)
r_2	distance of receiver from center of curvature (Fig. 3)
h_1	height of source above surface (Fig. 2)
h_2	height of receiver above surface (Fig. 2)
d	distance from source to receiver measured along the surface (Fig. 2)
d_o	natural unit of distance $\left(2a^2/k\right)^{1/3}$ See Eq. (1.1)
h_o	natural unit of height $\left(a/2k^2\right)^{1/3}$ See Eq. (1.2)
T_1	distance from source to point of tangency (Fig. 4)
T_2	distance from receiver to point of tangency (Fig. 4)
S	arclength between points of tangency (Fig. 4)
S	eikonal (Sec. 2)
T_o	natural unit of length $\left(2a^2/k\right)^{1/3}$ See Eq. (1.3)
S_o	natural unit of arclength $\left(2a^2/k\right)^{1/3}$ See Eq. (1.3)

R	distance from source to receiver (Fig. 6)
$\xi = S/S_o$	arclength measured in natural units See Eq. (1.4)
$\zeta_{1,2} = T_{1,2}^2/T_o^2$	Eq. (1.4)
α	angle of incidence or reflection (Fig. 6)
D_1	distance from source to reflection point (Fig. 6)
D_2	distance from receiver to reflection point (Fig. 6)
$b = a \sin \alpha$	collision parameter (Fig. 7)
ϵ_o, μ_o	permittivity and permeability of free space
$\epsilon_1, \mu_1, \sigma$	permittivity, permeability, and conductivity of convex solid
$\epsilon_1' = \epsilon_1 + i(\sigma/\omega)$	complex permittivity [for $\exp(\mp i\omega t)$ time dependence]
Y	surface admittance Eq. (2.2)
Z	surface impedance Eq. (2.3)
D	divergence factor Eq. (2.6)
Γ	reflection coefficient Eq. (2.7)
$v_{1,2}(\xi)$	Airy integrals Eq. (3.3, 3.4)
$\Phi(d, h_1, h_2)$	Frechafer's diffraction integral Eq. (3.1)
$F(x, x_1, x_2)$	van der Pol-Bremmer diffraction integral Eq. (3.1)
$\delta = i(ka)^{-1/3}Z^{-1}$	normalized impedance parameter Eq. (4.5)
$q = i(ka/2)^{1/3}Z$	normalized impedance parameter Eq. (4.23, 5.27)
$V(\xi, \zeta_1, \zeta_2, q)$	Fock's diffraction integral Eq. (4.17)
$w_{1,2}(t)$	Airy integrals Eq. (4.16)
$Ai(t)$	Airy integral $\frac{1}{\pi}\int_0^\infty \cos\left(\frac{1}{3}x^3 + tx\right)dx$
$Bi(t)$	the second Airy integral $\frac{1}{\pi}\int_0^\infty \left[\exp\left(-\frac{1}{3}x^3 + tx\right) + \sin\left(\frac{1}{3}x^3 + tx\right)\right] dx$

$F(t)$	modulus of Airy integral Eq. (4.25)
$\chi(t)$	phase of Airy integral Eq. (4.25)
$G(t)$	modulus of derivative of Airy integral Eq. (4.26)
$\psi(t)$	phase of derivative of Airy integral Eq. (4.26)
α_s	roots of Airy integral $Ai(-\alpha_s) = 0$
β_s	roots of derivatives of Airy integral $Ai'(-\beta_s) = 0$
$A(q)$	form of Airy integral used by Franz and Keller Eq. (5.24)
$V_o(x, q)$	attenuation function (Nicholson functions) Eq. (7.2)
$V_1(x, q)$	current distribution functions (Fock functions) Eq. (7.9)
$V_2(x, q)$	reflection coefficient function (Pekeris functions) Eq. (7.11)
$u(x)$, $v(x)$	Eq. (7.2)
$f(x)$, $g(x)$	Eq. (7.9)
$p(x)$, $q(x)$	Eq. (7.11)
$K(z)$	modified Fresnel integral Eq. (7.15)
$\hat{V}_2(x, q)$	Pekeris caret function Eq. (7.10)
$\hat{p}(x)$, $\hat{q}(x)$	Eq. (7.21)
t_s	roots of $w_1'(t_s) - q\, w_1(t_s) = 0$ Eq. (7.28)
t_s^o	roots of $w_1'(t_s^o) = 0$ Eq. (7.38)
t_s^∞	roots of $w_1(t_s^\infty) = 0$ Eq. (7.37)
$F(\xi) = \exp\left(i\,\frac{\xi^3}{3}\right) f(\xi)$, $G(\xi) = \exp\left(i\,\frac{\xi^3}{3}\right) g(\xi)$	current distribution functions for $\xi < 0$

$$\left.\begin{aligned} P(\xi) &= 2/\sqrt{-\xi}\ \exp\left[(i\,\xi^3/12) + (i\,\pi/4)\right] p(\xi) \\ Q(\xi) &= 2\ \sqrt{-\xi}\ \exp\left[(i\,\xi^3/12) + (i\,\pi/4)\right] q(\xi) \end{aligned}\right\} \text{ reflection coefficient functions for } \xi < 0$$

$$\left.\begin{matrix} J^{(n)}(\xi) \\ K^{(n)}(\xi) \\ f^{(n)}(\xi) \\ g^{(n)}(\xi) \\ \hat{p}^{(n)}(\xi) \\ \hat{q}^{(n)}(\xi) \end{matrix}\right\} \text{ Eq. (7.76)}$$

$$\left.\begin{matrix} J_m^{(n)}(\xi) \\ K_m^{(n)}(\xi) \\ f_m^{(n)}(\xi) \\ g_m^{(n)}(\xi) \\ r_m^{(n)}(\xi) \\ s_m^{(n)}(\xi) \end{matrix}\right\} \text{ Eq. (7.79)}$$

$$\left.\begin{matrix} \hat{u}(\xi) \\ \hat{v}(\xi) \\ \hat{c}(\xi) \\ \hat{d}(\xi) \\ \hat{k}(\xi) \\ \hat{l}(\xi) \end{matrix}\right\} \text{ Eq. (7.88)}$$

$$\left.\begin{matrix} M_n \\ N_n \end{matrix}\right\} \text{ Eq. (12.9)}$$

$$\left.\begin{matrix} F(x, y_1, y_2, \delta) \\ G(x, y_1, y_2, q) \end{matrix}\right\} \text{ Eq. (15.1)}$$

$$\left.\begin{array}{l} F_1(x, y, \delta) \\ G_1(x, y, q) \end{array}\right\} \text{Eq. (15.12)}$$

$$\left.\begin{array}{l} J(\xi, \alpha) \\ f(\xi, \alpha) \\ r(\xi, \alpha) \\ K(\xi, \beta) \\ q(\xi, \beta) \\ s(\xi, \beta) \end{array}\right\} \text{Eq. (15.26)}$$

$$\left.\begin{array}{l} J_m(\xi) = J_m^{(o)}(\xi) \\ f_m(\xi) = f_m^{(o)}(\xi) \\ r_m(\xi) = r_m^{(o)}(\xi) \\ K_m(\xi) = K_m^{(o)}(\xi) \\ g_m(\xi) = g_m^{(o)}(\xi) \\ s_m(\xi) = s_m^{(o)}(\xi) \end{array}\right\} \text{Eq. (15.26)}$$

$\tilde{f}^{(n)}(\xi)$ Eq. (15.55)

$\tilde{g}^{(n)}(\xi)$ Eq. (15.62)

$\tilde{q}^{(n)}(\xi)$ Eq. (15.83)

We have used the notation $z_<$ or $z_>$ to denote, respectively, the smaller or larger of two quantities z_1, z_2.

Section 1
GEOMETRY OF DIFFRACTION PROBLEMS

The LMSD general research program in diffraction theory is directed toward the development of methods for the computation of the diffraction phenomena associated with (a) the propagation of waves around, (b) the radiation of waves from sources in the vicinity of, and (c) the scattering of waves by convex metallic surfaces. This study involves a generalization of the ray-tracing techniques of geometrical optics in a manner which permits one to compute the amplitude and the phase of a wave reflected or diffracted by a convex metallic surface which has radii of curvature larger than several wavelengths. The ordinary calculational procedures of geometrical optics can only be used on these problems when the radii of curvature greatly exceed the wavelength and when the reflection point is far from edges, shadow boundaries, and other discontinuities. The present investigation involves the introduction of a class of universal functions which can be used to predict the reflection phenomena in the line-of-sight region and the diffraction phenomena in the shadow region. The functions which we will use are derived from the well-known diffraction formula which was used very extensively during World War II for the construction of coverage diagrams for radars mounted above a spherical earth in a so-called "standard atmosphere." This formula had been developed prior to the 1940's by Nicholson (Ref. 1), Macdonald (Ref. 2), Watson (Ref. 3), Vvedensky (Ref. 4), van der Pol (Ref. 5), and van der Pol and Bremmer (Ref. 6). In this report we give a number of extensions to this method of treating diffraction by convex surfaces.

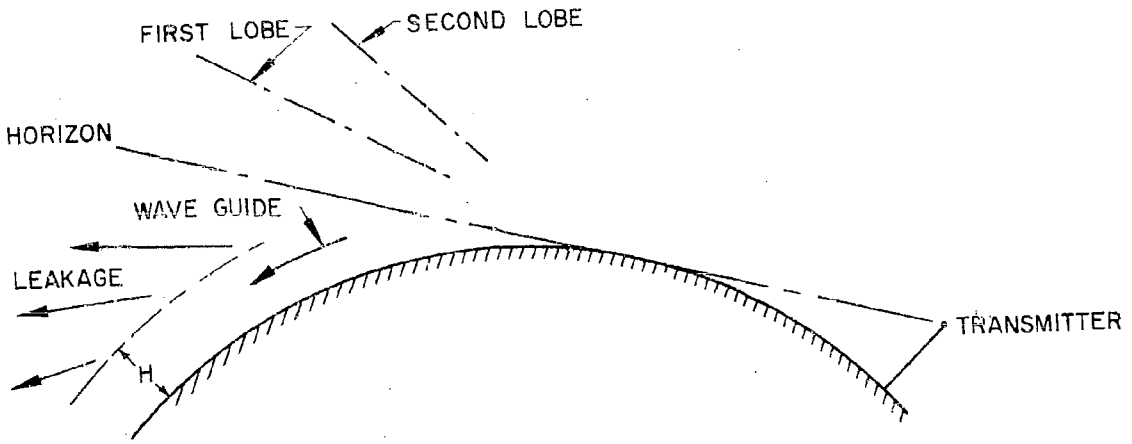

Fig. 1 The Mechanism of Diffraction (After Booker and Walkinshaw, Ref. 7)

Above the optical horizon, the field of a transmitter situated in the vicinity of a curved surface consists of a succession of lobes caused by interference between the direct wave from the source and a wave which is reflected from the surface. The form of the diffraction-field below the horizon under the condition of propagation in a "standard-atmosphere" can be considered to be the field due to a leaky waveguide having a "height" H which is of the order of

$$H \sim \left(\frac{a}{2k^2}\right)^{1/3} = \left(\frac{a\lambda^2}{8\pi^2}\right)^{1/3}$$

where a denotes the radius of curvature of the surface, and λ denotes the wavelength. In Fig. 1 we represent this description of the diffraction problem in the manner employed by Booker and Walkinshaw (Ref. 7) who refer to H as the "track width" of the waveguide. Most authors refer to the diffracted wave near the surface as a surface wave. The track width plays an important role in these

problems. The methods of approximation for the expressions for the field strength are different according to whether the detector is above or below the track width. Furthermore, in the vicinity of the track width, the guided wave propagates at the speed of light, whereas for points closer to the surface, the wave has a velocity which is less than the velocity of light.

Most of the studies which have been made by previous authors can be classed as a radio problem or as an optics problem. In the radio problem, the source and the receiver are located at heights above the surface which are small in comparison with the radius of curvature of the diffracting surface. (See Fig. 2).

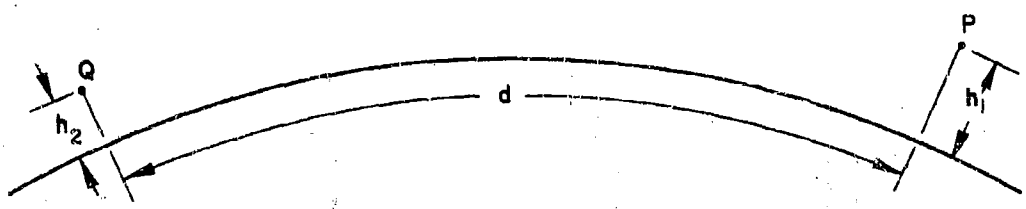

Fig. 2 Geometry of the Radio Problem

In this case it is convenient to use the distance d measured along the surface, and the heights h_1, h_2 of the source and the receiver, respectively. It is found convenient to define so-called natural units of distance d_o and height h_o defined by

$$d_o = \left(\frac{2a^2}{k}\right)^{1/3} = \left(\frac{2}{ka}\right)^{1/3} a = \left(\frac{a^2\lambda}{\pi}\right)^{1/3} \tag{1.1}$$

$$h_o = \left(\frac{a}{2k^2}\right)^{1/3} = \left(\frac{ka}{2}\right)^{1/3} \frac{1}{k} = \left(\frac{a\lambda^2}{8\pi^2}\right)^{1/3} \tag{1.2}$$

We then define the dimensionless variables

$$\xi = \frac{d}{d_o} \quad , \quad \zeta_1 = \frac{h_1}{h_o} \quad , \quad \zeta_2 = \frac{h_2}{h_o}$$

We observe that $H \simeq h_o$; i.e., the track-width of the leaky waveguide is of the order of one natural unit of height.

In the optics problem, the distances of the source and receiver are large compared with the radius of curvature of the diffracting obstacle (Fig. 3). In this problem

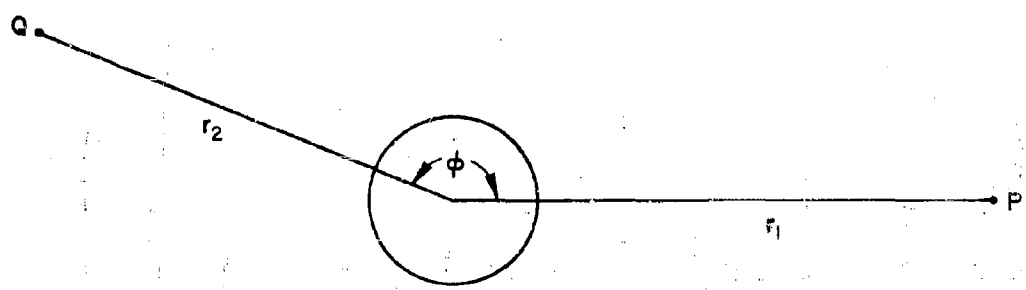

Fig. 3 Geometry of the Optics Problem

the geometrical lengths are the distance T_1 from the source P measured along the tangent to the obstacle, the arc length S on the obstacle, and the distance T_2 along the tangent from the obstacle to the receiver (Fig. 4). We observe that

$$T_1 = \sqrt{r_1^2 - a^2} \quad , \quad S = a\left(\phi - \cos^{-1}\frac{a}{r_1} - \cos^{-1}\frac{a}{r_2}\right) \quad , \quad T_2 = \sqrt{r_2^2 - a^2}$$

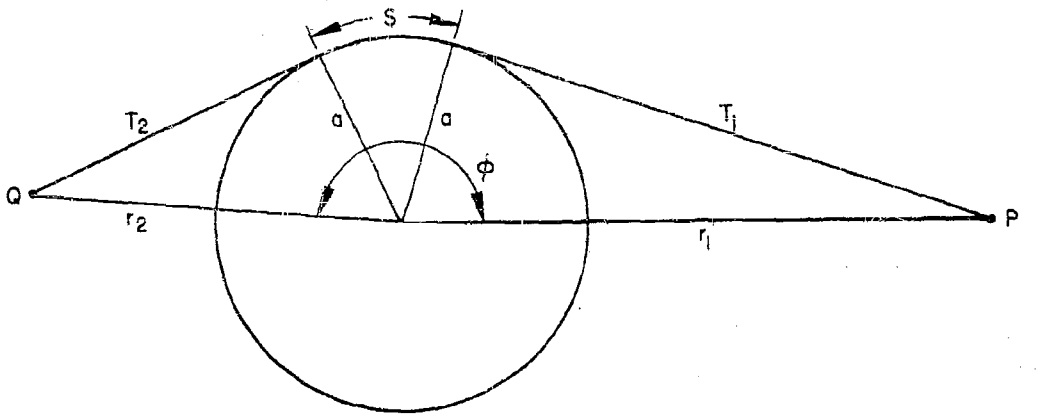

Fig. 4 Definitions of T_1, T_2, S for Shadow Region

It is convenient to define the natural units of length

$$S_o = T_o = \left(\frac{2}{ka}\right)^{1/3} a = \left(\frac{2a^2}{k}\right)^{1/3} = \left(\frac{a^2\lambda}{\pi}\right)^{1/3} \tag{1.3}$$

and the dimensionless variables

$$\xi = \frac{S}{S_o}, \quad \zeta_1 = \frac{T_1^2}{T_o^2}, \quad \zeta_2 = \frac{T_2^2}{T_o^2} \tag{1.4}$$

We observe that S is positive when Q lies below the horizon, and negative when Q lies above the horizon. In Fig. 5 we illustrate the significance of S for the case when Q lies in the line-of-sight of P.

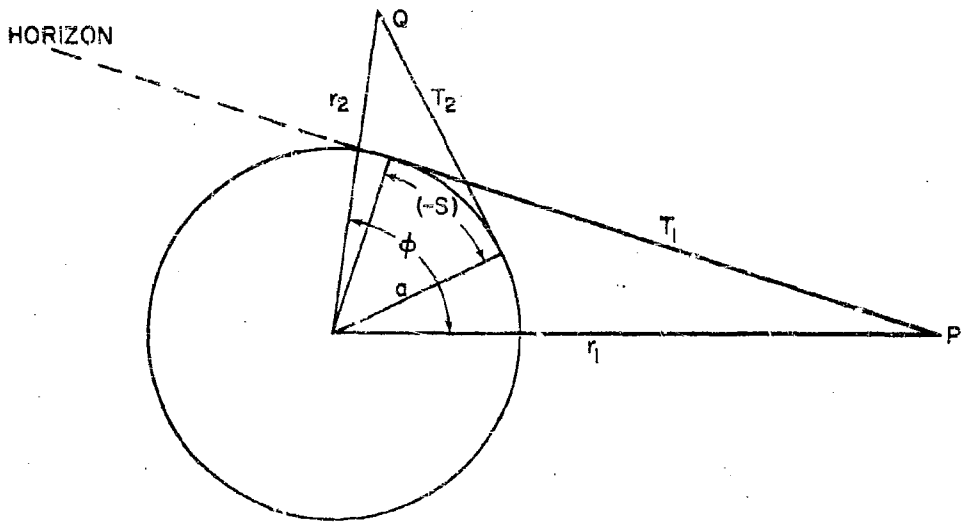

Fig. 5 Definition of T_1, T_2, S for Line-of-Sight Region

For the case when Q lies well above the horizon, we introduce the concept of a direct wave passing from P to Q along the straight line of length R which joins P and Q. We also use the concept of a reflected wave which passes from P to Q along the shortest path between these points which has one point on the surface of the convex obstacle. This path consists of two straight lines of lengths D_1 and D_2 as shown in Fig. 6. In this figure we also define the angles α, β, γ.

It is also convenient to introduce the concept of the collision parameter b, which is the distance of closest approach to the center of curvature of the extensions of the straight line segments D_1 and D_2 (Fig. 7). We observe that $b = a \sin \alpha$.

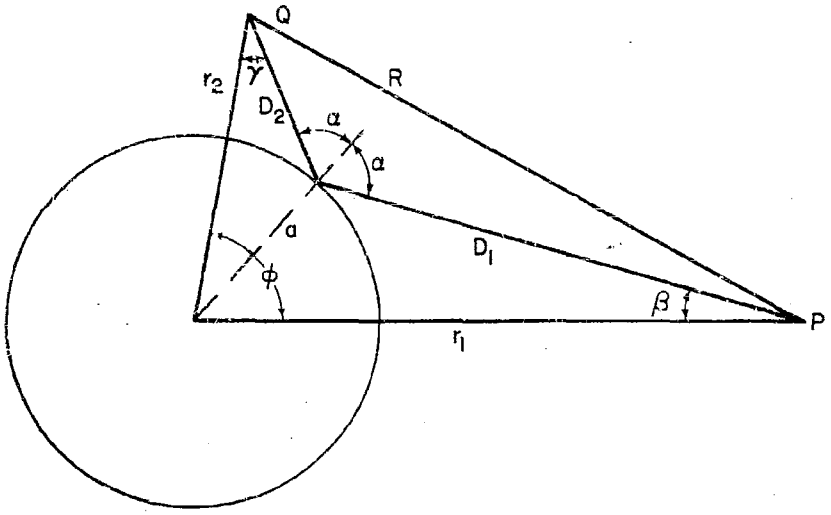

Fig. 6 Definition of R, D_1, D_2 and α, β, γ

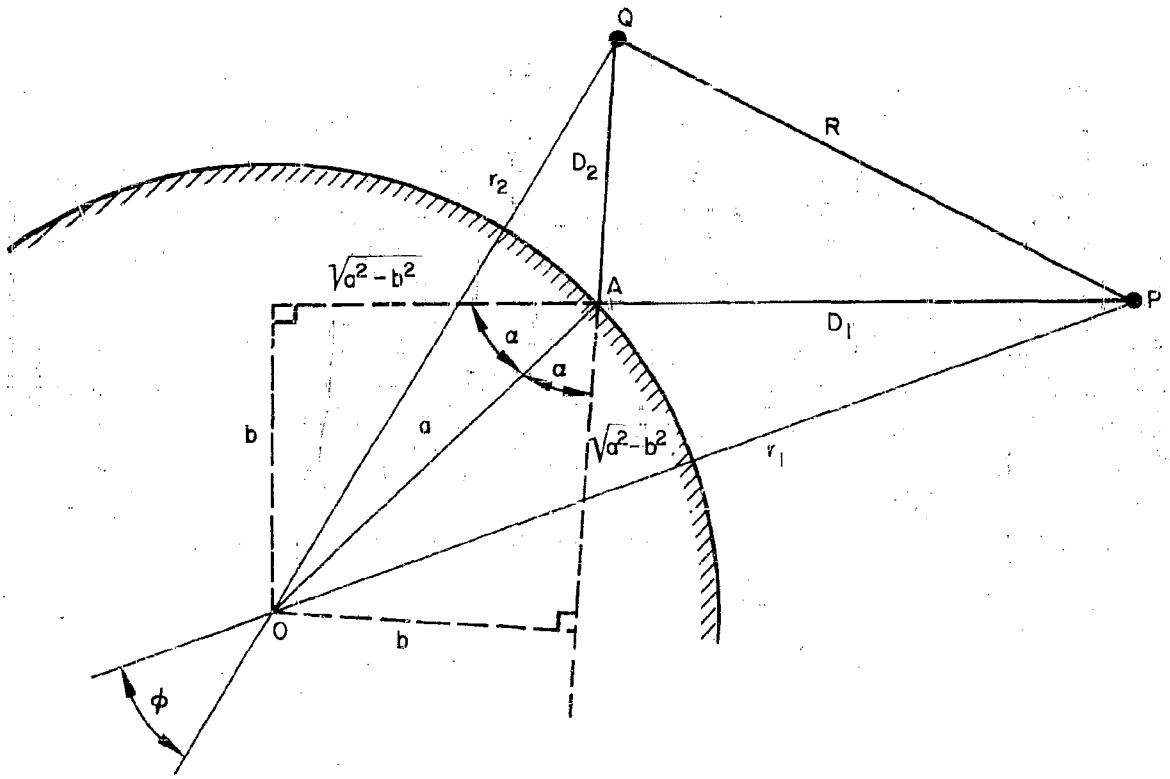

Fig. 7 Definition of Collision Parameter b

Section 2
LIMITATIONS OF THE CLASSICAL THEORY OF GEOMETRICAL OPTICS

For almost a century, one of the most challenging problems facing classical mathematical analysts has been that of supplying physicists, physical chemists, meteorologists, astrophysicists, seismologists, acousticians, and electrical engineers with simple expressions which describe the diffraction phenomena associated with the propagation of electromagnetic (light and radio), seismic (elastic), and acoustic waves in the vicinity of convex surfaces having radii of curvature large compared with the wavelength. Exact solutions in the form of Fourier series or series of spherical harmonics have been known for circular cylinders and spheres since the close of the nineteenth century. These series are very cumbrous in form, and, although they readily yield a physical solution for a very small obstacle, they are quite useless for obstacles having more than several wavelengths in their circumference. Furthermore, the restriction to obstacles having constant radii of curvature is a severe restriction.

The mathematical tools to be developed in this volume are useful for the cases in which the boundary conditions on the surface of the obstacle can be expressed in terms of an impedance boundary condition. This excludes the interesting cases of transparent obstacles which have attracted considerable attention in the fields of physical chemistry, meteorology, and astrophysics. However, a large class of problems in radio, television, radar, and sonar engineering can be treated by introducing the concept of an impedance boundary.

In Fig. 8 we depict a discontinuity in electrical properties across the boundary S of two homogeneous, isotropic media. We define the complex permittivity ϵ_1' to be

$$\epsilon_1' = \epsilon_1 + i(\sigma/\omega)$$

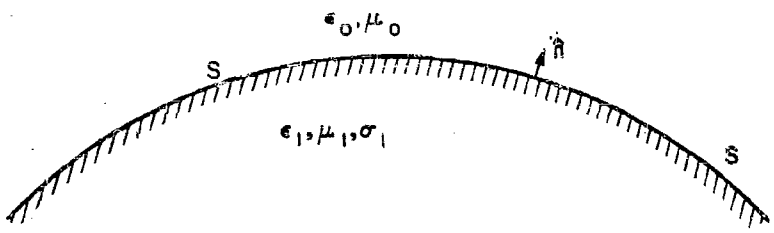

Fig. 8 Discontinuity in Electrical Properties

The impedance boundary condition to be imposed on the fields $\vec{E}$, $\vec{H}$ exterior to the convex surface can be expressed in the form

$$\left(\frac{\partial E_t}{\partial n} + ikYE_t\right)_S = 0 \; , \; \left(\frac{\partial H_t}{\partial n} + ikZH_t\right)_S = 0 \tag{2.1}$$

where $\partial/\partial n$ denotes the normal derivative, the subscript t denotes the tangential components, and Y is the surface admittance

$$Y = \frac{\mu_0}{\mu_1}\sqrt{\left(\frac{\epsilon_1'\mu_1}{\epsilon_0\mu_0}\right) - 1} \tag{2.2}$$

and Z is the surface impedance

$$Z = \frac{\epsilon_0}{\epsilon_1'}\sqrt{\left(\frac{\epsilon_1'\mu_1}{\epsilon_0\mu_0}\right) - 1} \tag{2.3}$$

The simplifications associated with the introduction of these simplified boundary conditions are not enough because there still remains the problem of solving the wave equation. The theory of geometrical optics represents an attempt to replace the wave equation by a more tractable mathematical model. This theory was

developed by Hamilton during the first half of the nineteenth century. An excellent modern account of the theory is given by Freehafer (Ref. 8). A solution of the scalar wave equation

$$\nabla^2\psi + k^2 n^2 \psi = 0$$

is sought by writing

$$\psi = A \exp(ikS)$$

where A and S are real functions of position. It is found that these functions must satisfy the relations

$$(\nabla S)^2 - \frac{\nabla^2 A}{Ak^2} n^2 = 0$$

$$\nabla^2 S + \frac{2(\nabla S) \cdot (\nabla A)}{A} = 0$$

To obtain a tractable simplification, it is generally assumed that $\nabla^2 A / Ak^2 << n^2$ and hence

$$(\nabla S)^2 = n^2$$

This is known as the eikonal equation. In free space $n = 1$ and

$$(\nabla S)^2 = 1$$

In this case S measures the linear distance of propagation of waves traveling in a constant direction.

One of the most important results of this theory is the reflection formula for reflection of waves from a convex surface which has radii of curvature greatly exceeding the wavelength provided the reflection point is far from edges, shadow

boundaries, and other discontinuities. Consider the special case of a line source situated at P (Fig. 7) which gives rise to a free space field

$$U^{o} = \frac{i}{4}\sqrt{\frac{2}{\pi kR}}\exp\left[\, i(kR - \pi/4)\,\right] \tag{2.4}$$

in the vicinity of a circular cylinder of radius $\underline{a}$. The field at Q is then given by

$$U = \underbrace{\frac{i}{4}\sqrt{\frac{2}{\pi kR}}\exp\left[\, i(kR - \pi/4)\right]}_{\text{direct wave}} + \underbrace{\frac{i}{4}\sqrt{\frac{2}{\pi k}}\;\Gamma D \exp\left\{ i\left[k(D_1 + D_2) - \pi/4\right]\right\}}_{\text{reflected wave}} \tag{2.5}$$

where $\underline{\Gamma}$ is the <u>Fresnel reflection coefficient</u> and $\underline{D}$ is the <u>divergence factor</u>

$$D = \sqrt{\frac{\sqrt{a^2 - b^2}}{2D_1D_2 + \sqrt{a^2 - b^2}\,(D_1 + D_2)}} = \sqrt{\frac{a\cos\alpha}{2D_1D_2 + a(D_1 + D_2)\cos\alpha}} \tag{2.6}$$

that takes into account the fact that the pencil of rays incident upon the convex surface diverges after reflection because of the curvature of the surface. The eikonal for the reflected wave is

$$S = D_1 + D_2$$

If the impedance boundary condition is expressed in the form

$$\left(\frac{\partial U}{\partial n} + ikZU\right)_{\text{surface}} = 0$$

the Fresnel reflection coefficient is

$$\Gamma = \frac{\cos\alpha - Z}{\cos\alpha + Z} \tag{2.7}$$

where $\alpha = \sin^{-1}(b/a)$ is the angle between the normal to the surface and the incident or reflected ray.

During the past ten years a number of attempts have been made to extend the validity of this reflection formula by seeking a representation in the form of an asymptotic expansion of the form

$$\frac{i}{4}\sqrt{\frac{2}{\pi k}}\quad \Gamma D \exp\left\{i\left[k(D_1 + D_2) - \pi/4\right]\right\}\left\{1 + \frac{A_1}{k} + \frac{A_2}{k^2} + \frac{A_3}{k^3} + \ldots\right\}$$

These results have only a limited usefulness in the line-of-sight region and cannot be used at all as one approaches the shadow boundary. For example, if the plane wave $E_z^0 = \exp(-ik\rho\cos\phi)$ illuminates a perfectly conducting circular cylinder, the secondary field is known to be of the form

$$E_z^s = \sqrt{\frac{a\cos\phi/2}{2\rho}}\exp\left[ik(\rho - 2a\cos\phi/2)\right]\left\{1 + \frac{i}{2\,ka\cos^3\phi/2}\right.$$

$$- \frac{3i}{16\,ka\cos\phi/2} + \frac{5}{4(ka)^2\cos^6\phi/2} - \frac{33}{32(ka)^2\cos^4\phi/2}$$

$$\left. + \frac{15}{512(ka)^2\cos^2\phi/2} + \mathcal{O}\left(\frac{1}{k^3}\right)\right\}$$

For $\phi \to \pi$, this series is useless regardless of how large k might be.

In order to obtain a result which is valid on shadow boundaries or horizons, one has to abandon the concept of direct and reflected rays because these rays coalesce at such a boundary. The criterion for applicability of the optical concepts can be taken to be $(ka/2)^{1/3} > 3$ to insure that the object is large compared with wavelength, and $\sqrt{a^2 - b^2} > \sqrt[3]{2a^2/k}$ in order to avoid shadow boundaries.

Section 3

A MATHEMATICAL MODEL DISPLAYING CHARACTERISTICS OF DIFFRACTION PHENOMENA*

In the last section, we reviewed the results of geometrical optics and remarked upon their limitations. The difficulty was due largely to the fact that a solution of

$$\nabla^2 U + k^2 U = 0$$

had been sought in the form of a primary and a secondary wave

$$U = A^p \exp(-ikR) + A^s \exp\left[-ik(D_1 + D_2)\right]$$

which would satisfy the impedance boundary condition

$$\frac{\partial U}{\partial n} - ikZU = 0$$

We now want to seek a solution of the form

$$U = A^d \exp(-ikR)$$

which will be valid on and near the shadow boundary and which will have the property that, well above the shadow boundary, it agrees with the optical result.

---

* In this section we will follow Freehafer and use an $\exp(i\omega t)$ time dependence. In all other sections of this report we use an $\exp(-i\omega t)$ time dependence.

A suitable mathematical model for such a solution is discussed by Freehafer (Ref. 8) in Section 2.10 of Vol. 13 of the Radiation Laboratory Series. In Eq. (361) we find the Fourier integral

$$\Phi(d, h_1, h_2) = 1/\sqrt{d} \int_{-\infty}^{\infty} \exp(i\tau d) \left[y_2(h_> + \tau) y_1(h_< + \tau) + \Gamma \frac{y_1(\tau)}{y_2(\tau)} y_2(h_1 + \tau) y_2(h_2 + \tau) \right] d\tau \tag{3.1}$$

where Γ is defined by Eq. (355)

$$\Gamma = - \frac{y_1'(\tau) - h_o p y_1(\tau)}{y_2'(\tau) - h_o p y_2(\tau)} \tag{3.2}$$

and $y_1(\zeta)$, $y_2(\zeta)$ are the Airy integrals

$$y_1(\zeta) = -1/\sqrt{\pi} \int_0^{\infty} \exp\left[-\frac{1}{3} x^3 - \zeta x \right] dx - i/\sqrt{\pi} \int_0^{\infty} \exp\left[i \frac{1}{3} x^3 + i\zeta x \right] dx \tag{3.3}$$

$$y_2(\zeta) = 1/\sqrt{\pi} \int_0^{\infty} \exp\left[-\frac{1}{3} x^3 - \zeta x \right] dx - i/\sqrt{\pi} \int_0^{\infty} \exp\left[i \frac{1}{3} x^3 - i\zeta x \right] dx \tag{3.4}$$

which are discussed at length by Freehafer in Section 2.9. The quantity $h_o = k^{-1}(ka/2)^{1/3}$ is the standard unit of height defined earlier. The quantity p depends upon the polarization of the wave. If the obstacle has a wave number k_1, we can write

$$p_v = i(k^2/k_1^2) \sqrt{k_1^2 - k^2} = ik(\epsilon_o/\epsilon_1') \sqrt{(\epsilon_1'/\epsilon_o) - 1} = ikZ, \tag{3.5}$$

for vertical polarization,

$$p_h = i\sqrt{k_1^2 - k^2} = ik\sqrt{(\epsilon_1'/\epsilon_o) - 1} = ikY, \tag{3.6}$$

for horizontal polarization,

where ϵ_1' denotes the complex permittivity

$$\epsilon_1' = \epsilon_1 - i\,\sigma/\omega$$

This integral was first introduced in 1941 by M. H. L. Pryce (Ref. 9) in a report on the limiting ranges of the early British radar sets. Because of the specific references given to wavelength and power output of these radar sets, this report was classified and received only limited distribution. The results were summarized by Freehafer; and finally, in 1953, Pryce (Ref. 10) published a paper based upon this wartime report.

(Although the work of Pryce and Freehafer was well known at Radiation Laboratory, and Kerr's "Propagation of Short Radio Waves" was published in 1951, the integral representation for $\Phi(d, h_1, h_2)$ given above is not in current use today. In the next section we will introduce a different notation, adopted from the notation used by modern Soviet writers, as a standard form for this integral.)

In the work of Pryce and Freehafer, two representations for Φ were employed. For $d < \sqrt{h_1} + \sqrt{h_2}$ (the so-called "interference region"), it was shown that the Fourier integral

$$\frac{1}{\sqrt{d}} \int_{-\infty}^{\infty} \exp(i\tau d)\ \Gamma\ \frac{y_1(\tau)}{y_2(\tau)}\ y_2(\tau + h_1) y_2(\tau + h_2)\, d\tau$$

has a point of stationary phase τ_0 defined by

$$d = \sqrt{\tau_0 + h_1} + \sqrt{\tau_0 + h_2} - 2\sqrt{\tau_0}$$

It was shown that τ_0 could be interpreted physically to be related to the square of the cosine of the angle of incidence of the ray reflected from the surface (Fig. 7 where α is the angle of incidence). Thus

$$\tau_0 = (ka/2)^{2/3} \cos^2\alpha$$

It was then shown that

$$\Phi(d, h_1, h_2) \approx 2\sqrt{\pi}\ \exp\left[-i(3\pi/4)\right] \frac{1}{d} \exp(-i\,\phi_1) \left[1 + \Gamma D \exp\left[-i(\phi_2 - \phi_1)\right] \right] \tag{3.7}$$

where ϕ_1 is the phase of the "direct wave"

$$\phi_1 = -d^3/12 + (h_1 + h_2)d/2 + (h_2 - h_1)^2/4d \tag{3.8}$$

ϕ_2 is the phase of the "reflected wave"

$$\phi_2 = \phi_1 + 4\,\frac{\left(\sqrt{h_1 + \tau_o} - \sqrt{\tau_o}\right)\left(\sqrt{h_2 + \tau_o} - \sqrt{\tau_o}\right)}{\left(\sqrt{h_1 + \tau_o} - \sqrt{\tau_o}\right) + \left(\sqrt{h_1 + \tau_o} - \sqrt{\tau_o}\right)}\,\tau_o \tag{3.9}$$

and D is the divergence factor that takes into account the fact that a pencil of parallel rays incident upon the convex surface diverges after reflection

$$D = \left\{ 1 + \frac{2\left(\sqrt{h_1 + \tau_o} - \sqrt{\tau_o}\right)\left(\sqrt{h_2 + \tau_o} - \sqrt{\tau_o}\right)}{\left[\left(\sqrt{h_1 + \tau_o} - \sqrt{\tau_o}\right) + \left(\sqrt{h_2 + \tau_o} - \sqrt{\tau_o}\right)\right]\sqrt{\tau_o}} \right\}^{-1} \tag{3.10}$$

The reflection coefficient was shown to be

$$\Gamma_v = \frac{k_1^2 \cos\alpha - k_o\sqrt{k_1^2 - k_o^2}}{k_1^2 \cos\alpha + k_o\sqrt{k_1^2 - k_o^2}} = \frac{\cos\alpha - Z}{\cos\alpha + Z}, \quad Z = \frac{k_o\sqrt{k_1^2 - k_o^2}}{k_1^2},$$

for vertical polarization

$$\Gamma_h = \frac{k_o \cos\alpha - \sqrt{k_1^2 - k_o^2}}{k_o \cos\alpha + \sqrt{k_1^2 - k_o^2}} = \frac{\cos\alpha - Y}{\cos\alpha + Y}, \quad Y = \frac{\sqrt{k_1^2 - k_o^2}}{k_o},$$

for horizontal polarization

where the square roots indicated are to have negative imaginary parts when the time dependence is $\exp(i\omega t)$ as used by Pryce and Freehafer.

For $d > \sqrt{h_1} + \sqrt{h_2}$ (the so-called "diffraction region"), it was shown that the contour could be closed by a circle at infinity in the upper half-plane and then Φ could be represented in the form of a series of residues associated with the zeros $\tau_m (m = 1, 2, \ldots)$ of the Airy function combination

$$y_2'(\tau_m) - h_0 p\, y_2(\tau_m) = 0 \tag{3.11}$$

It was then shown that for frequencies of 100 Mc/sec or above, the roots required could be approximated by

$$y_2(\tau_m) = 0$$

The resulting residue series representation

$$\Phi(d, h_1, h_2) = -\frac{4\pi}{\sqrt{d}} \sum_{m=1}^{\infty} \exp(i\tau_m d)\, U_m(h_1)\, U_m(h_2) \tag{3.12}$$

$$U_m(h) = i\,\frac{y_2(\tau_m + h)}{y_2'(\tau_m)} \tag{3.13}$$

was primarily used for points deep inside the shadow where only the first mode need be considered. This calculation could be made quite easily since the first root τ_1 was known,

$$\tau_1 = 2.3381 \exp\left[\, i(2\pi/3) \,\right]$$

and the height-gain function $U_1(h)$ could be readily computed. The behavior of $20 \log_{10} |U_1(X)|$ is illustrated in Table 1.

Table 1

X	$20 \log_{10} \lvert U_1 \rvert$	X	$20 \log_{10} \lvert U_1 \rvert$	X	$20 \log_{10} \lvert U_1 \rvert$
0		1.0	1.120	5.	23.77
0.1	-19.9	1.2	3.075	10.0	39.69
0.2	-13.9	1.4	4.82	20.0	62.06
0.3	-10.3	1.6	6.39	30.0	79.24
0.4	- 7.73	1.8	7.84	50.0	106.5
0.5	- 5.68	2.0	9.19	60.0	118.1
0.6	- 3.96	2.5	12.2	80.0	138.7
0.8	- 1.16	3.0	14.9	100.0	156.9

In the intermediate region, $\left| d - \sqrt{h_1} - \sqrt{h_2} \right| < 1$, neither the stationary phase result nor the first residue term result would yield a means of calculating the field. The techniques used in this region at Radiation Laboratory is described by Freehafer in Section 2.15 of Propagation of Short Radio Waves (Ref. 8).

The integral of Pryce and Freehafer provides a mathematical model for extending the result obtained from geometrical optics in the last section.

$$U = -\frac{i}{4}\sqrt{\frac{2}{\pi kR}}\exp\left[-i(kR - \pi/4)\right] - \frac{i}{4}\sqrt{\frac{2}{\pi kR}}\,\Gamma\sqrt{\frac{aR\cos\alpha}{2D_1D_2 + a(D_1 + D_2)\cos\alpha}}$$

$$\exp\left\{-i\left[k(D_1 + D_2) - \pi/4\right]\right\} \tag{3.14}$$

to grazing angles of incidence. We observe that for $\alpha \to \pi/2$,

$$R = \sqrt{D_1^2 + D_2^2 - 2D_1D_2\cos\alpha} = \sqrt{(D_1 + D_2)^2 - 4D_1D_2\cos^2\alpha}$$

$$\sim (D_1 + D_2) - \frac{2D_1D_2}{D_1 + D_2}\cos^2\alpha$$

We can then express the optics result in the form

$$U \approx -\frac{i}{4}\sqrt{\frac{2}{\pi kR}}\exp\left[-i(kR-\pi/4)\right]\left\{1+\Gamma\sqrt{\frac{a(D_1+D_2)\cos\alpha}{2D_1D_2+a(D_1+D_2)\cos\alpha}}\right.$$

$$\left.\exp\left(-ik\frac{2D_1D_2}{D_1+D_2}\cos^2\alpha\right)\right\} \tag{3.15}$$

If we define (see Fig. 7)

$$h_1=\left(\frac{2}{ka}\right)^{4/3}\left(\frac{kT_1}{2}\right)^2,\quad h_2=\left(\frac{2}{ka}\right)^{4/3}\left(\frac{kT_2}{2}\right)^2,\quad p=\left(\frac{ka}{2}\right)^{1/3}\cos\alpha=\sqrt{\tau_o}\ ,\quad q=i\left(\frac{ka}{2}\right)^{1/3}Z \tag{3.16}$$

we can show that

$$\sqrt{h_1+\tau_o}-\sqrt{\tau_o}=\sqrt{h_1+p^2}-p=\left(\frac{2}{ka}\right)^{2/3}\frac{kD_1}{2}$$

$$\sqrt{h_2+\tau_o}-\sqrt{\tau_o}=\sqrt{h_2+p^2}-p=\left(\frac{2}{ka}\right)^{2/3}\frac{kD_2}{2}$$

$$D=\left\{1+\frac{2D_1D_2}{a(D_1+D_2)\cos\alpha}\right\}^{-1}=\left\{1+\frac{2\left(\sqrt{h_1+\tau_o}-\sqrt{\tau_o}\right)\left(\sqrt{h_2+\tau_o}-\sqrt{\tau_o}\right)}{\left[\left(\sqrt{h_1+\tau_o}-\sqrt{\tau_o}\right)+\left(\sqrt{h_2+\tau_o}-\sqrt{\tau_o}\right)\right]\sqrt{\tau_o}}\right\}^{-1}$$

$$\Gamma=-\frac{q-ip}{q+ip}=\frac{p+iq}{p-iq}$$

$$\exp\left\{-ik\frac{2D_1D_2}{D_1+D_2}\cos^2\alpha\right\}=\exp\left\{-i\frac{4\left(\sqrt{h_1+\tau_o}-\sqrt{\tau_o}\right)\left(\sqrt{h_2+\tau_o}-\sqrt{\tau_o}\right)}{\left(\sqrt{h_1+\tau_o}-\sqrt{\tau_o}\right)+\left(\sqrt{h_2+\tau_o}-\sqrt{\tau_o}\right)}\tau_o\right\}$$

These results show that we can write

$$U \approx -\frac{i}{4}\sqrt{\frac{2}{\pi kR}}\exp\left[-i(kR-\pi/4)\right]\left\{\frac{\exp\left[i(\phi_1+3\pi/4)\right]}{2\sqrt{\pi}}\, d\,\Phi(d, h_1, h_2)\right\} \tag{3.17}$$

where

$$d = \left(\sqrt{h_1+\tau_o}-\sqrt{\tau_o}\right)+\left(\sqrt{h_2+\tau_o}-\sqrt{\tau_o}\right)=\left(\frac{k}{2a^2}\right)^{1/3}(D_1+D_2)\approx\left(\frac{k}{2a^2}\right)^{1/3}R$$

An alternative form is

$$U \approx -\frac{i}{8\pi}\exp\left[-i(kR-\pi/4)\right]\left(\frac{2}{ka}\right)^{1/3}\left\{\frac{\exp\left[i(\phi_1+3\pi/4)\right]}{2\sqrt{\pi}}\sqrt{d}\;\Phi(d, h_1, h_2)\right\} \tag{3.18}$$

This result is useful for grazing incidence, i.e., for points just above the horizon. For points high above the horizon, we define

$$\sqrt{d}\;\Phi_r(d, h_1, h_2) = \int_{-\infty}^{\infty}\exp(i\tau d)\,\Gamma\,\frac{y_1(\tau)}{y_2(\tau)}\,y_2(\tau+h_1)\,y_2(\tau+h_2)\,d\tau \tag{3.19}$$

and write

$$U \approx \underbrace{-\frac{i}{4}\sqrt{\frac{2}{\pi kR}}\exp\left[-i(kR-\pi/4)\right]}_{\text{direct wave}}$$
$$\underbrace{-\frac{i}{4}\sqrt{\frac{2}{\pi k}}\exp\left[-ik(D_1+D_2)+i\pi/4\right]\left\{\frac{\exp\left[i(\phi_2+3\pi/4)\right]}{2\sqrt{\pi}}\frac{d}{\sqrt{R_1+R_2}}\;\Phi_r(d, h_1, h_2)\right\}}_{\text{reflected wave}} \tag{3.20}$$

We note that high above the horizon (i.e., $\sqrt{h_1} + \sqrt{h_2} >> d$),

$$\left\{ \frac{\exp\left[i\left(\phi_2 + \frac{3\pi}{4}\right)\right]}{2\sqrt{\pi}} \quad \frac{d}{\sqrt{R_1 + R_2}} \; \Phi_r(d, h_1, h_2) \right\} \rightarrow \frac{\Gamma D}{\sqrt{R_1 + R_2}} = \Gamma \sqrt{\frac{a \cos \alpha}{2D_1 D_2 + a(D_1 + D_2)\cos \alpha}}$$

so that U takes on precisely the form obtained from geometrical optics. This form is a generalization of the Pryce-Freehafer theory which is valid well above the horizon as well as near the horizon. The direct and the reflected waves are distinct. Near the horizon we use the Pryce-Freehafer form

$$U \approx -\frac{i}{4}\sqrt{\frac{2}{\pi kR}} \exp\left[-i(kR - \pi/4)\right] \left\{ \frac{\exp\left[i(\phi_1 + 3\pi/4)\right]}{2\sqrt{\pi}} \, d\Phi(d, h_1, h_2) \right\} \tag{3.21}$$

which involves the total field.

For points below the horizon, the concept of reflected waves (and, hence, the concept of an angle of incidence α) cannot be directly employed. However, if we introduce the concept of virtual angles of incidence and reflection as illustrated in Fig. 9, then the results can be extended into the shadow region just below the horizon. In this case we observe that α exceeds 90° and hence $p = (ka/2)^{1/3} \cos \alpha \approx -(ka/2)^{1/3}(\alpha - \pi/2)$ is negative.

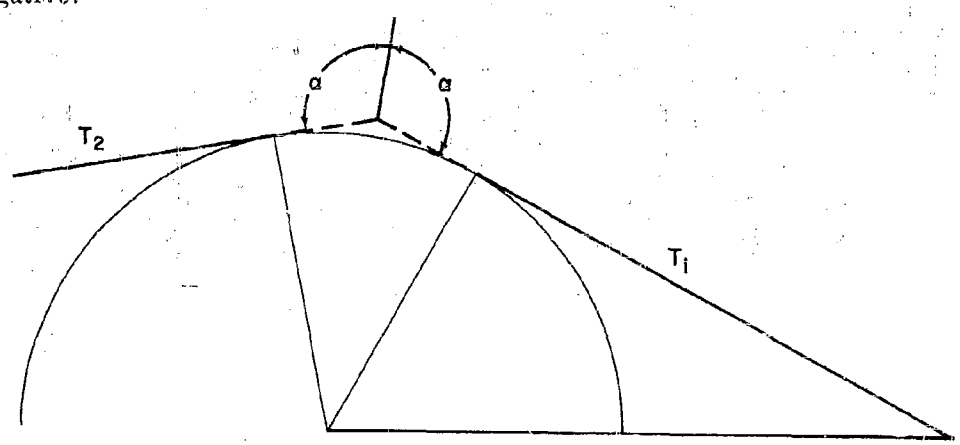

Fig. 9 Definition of Virtual Angles of Incidence and Reflection

For points well below the horizon, another form is required. In this case the phase of the wave is of the order of $(T_1 + S + T_2)$, where these quantities are defined in Fig. 4. We replace

$$d = \left(\sqrt{h_1 + \tau_o} - \sqrt{\tau_o}\right) + \left(\sqrt{h_2 + \tau_o} - \sqrt{\tau_o}\right)$$

by

$$d = \xi + \sqrt{h_1} + \sqrt{h_2}$$

where

$$\xi = (ka/2)^{1/3}\, 2(\alpha - \pi/2) = (ka/2)^{1/3}(S/a)$$

We then define

$$\phi_3 = \frac{2}{3} h_1^{3/2} + \frac{2}{3} h_2^{3/2}$$

and express U in the form

$$U \approx -\frac{i}{8\pi} \exp\left\{-i\left[k(T_1 + S + T_2) - \pi/4\right]\right\}\left(\frac{2}{ka}\right)^{1/3}\left\{\frac{\exp\left[i(\phi_3 + 3\pi/4\right]}{2\sqrt{\pi}} \sqrt{d}\ \Phi(d, h_1, h_2)\right\}$$

$$= -\frac{1}{4\sqrt{\pi}} \exp\left\{-i\left[k(T_1 + S + T_2) - \pi/2\right]\right\}\left(\frac{2}{ka}\right)^{1/3} \exp(i\phi_3) \sum_{m=1}^{\infty} \exp(i\tau_m d)\, U_m(h_1) U_m(h_2)$$

$$\xrightarrow[d \gg \sqrt{h_1} + \sqrt{h_2}]{} -\frac{1}{4\sqrt{\pi}} \left(\frac{2}{ka}\right)^{1/3} U_1(h_1)\, U_2(h_2) \exp\left\{i\left[-k(T_1 + S + T_2) + \frac{\pi}{2} + \phi_3 + \tau_1 d\right]\right\}$$

This residue series representation can be used on and below the horizon. On the horizon this representation agrees with the representation previously given for points on and above the horizon. For points far below the horizon, the first term of the residue series provides a suitable representation for Φ.

The original work of Pryce and Freehafer only dealt with applications of the diffraction formula $\Phi(d, h_1, h_2)$ for the geometry which we have depicted in Fig. 2 and referred to as the "radio problem". The present theory which has just been outlined includes the "radio problem" and the "optics problem" (Fig. 3) as special cases. The difference between the general results outlined here and the results for the "radio problem" can be better appreciated if we consider our example in more detail.

The Fourier integral

$$U(r_2, \phi; r_1, 0; ka, Z) = -\frac{i}{8}\int_{-\infty}^{\infty} \exp(-i\nu\phi)\left\{H_\nu^{(2)}(kr_>)\, H_\nu^{(1)}(kr_<) - \frac{H_\nu^{(1)\prime}(ka) - iZH_\nu^{(1)}(ka)}{H_\nu^{(2)\prime}(ka) - iZH_\nu^{(2)}(ka)}\, H_\nu^{(2)}(kr_1)\, H_\nu^{(2)}(kr_2)\right\} d\nu \tag{3.22}$$

is the exact solution of the scalar wave equation

$$(\nabla^2 + k^2)U = -\delta(x - r_1)\,\delta(y) = -\frac{\delta(r - r_1)\,\delta(\phi)}{r_1} \tag{3.23}$$

which behaves like

$$U^0 \Big|_{r \to r_1} = -\frac{i}{4}\sqrt{\frac{2}{\pi kR}}\,\exp\left[-i(kR + \pi/4)\right] \quad , \quad R = \sqrt{(x - r_1)^2 + y^2}$$

near the source, and which satisfies the boundary condition

$$\frac{\partial U}{\partial r} - ikZU = 0$$

on the surface $r = a$. We observe that U is an aperiodic function of ϕ defined on $-\infty < \phi < \infty$. If we now assume the geometry of the "radio problem" and introduce the definitions and asymptotic estimates

$$
\begin{aligned}
\nu &= ka - \left(\frac{ka}{2}\right)^{1/3}\tau & H_\nu^{(2)}(ka) &\to \frac{i}{\sqrt{\pi}}\left(\frac{2}{ka}\right)^{1/3} y_2(\tau) \\
q &= -i\left(\frac{ka}{2}\right)^{1/3} Z & H_\nu^{(1)}(ka) &\to \frac{i}{\sqrt{\pi}}\left(\frac{2}{ka}\right)^{1/3} y_1(\tau) \\
\xi &= \left(\frac{ka}{2}\right)^{1/3}\phi & H_\nu^{(2)\prime}(ka) &\to \frac{i}{\sqrt{\pi}}\left(\frac{2}{ka}\right)^{2/3} y_2'(\tau) \\
\zeta_1 &= \left(\frac{2}{ka}\right)^{1/3} k(r_1 - a) & H_\nu^{(1)\prime}(ka) &\to \frac{i}{\sqrt{\pi}}\left(\frac{2}{ka}\right)^{2/3} y_1'(\tau) \\
\zeta_2 &= \left(\frac{2}{ka}\right)^{1/3} k(r_2 - a) & H_\nu^{(2)}(kr) &\to \frac{i}{\sqrt{\pi}}\left(\frac{2}{ka}\right)^{1/3} y_2(\tau + \zeta) \\
\zeta &= \left(\frac{2}{ka}\right)^{1/3} k(r - a) & H_\nu^{(1)}(kr) &\to \frac{i}{\sqrt{\pi}}\left(\frac{2}{ka}\right)^{1/3} y_1(\tau + \zeta)
\end{aligned}
\tag{3.24}
$$

we find that

$$
\begin{aligned}
U(r_2, \phi; r_1, 0; ka, Z) &\approx -\frac{i}{8\pi}\left(\frac{2}{ka}\right)^{1/3} \exp(-ika\phi) \int_{-\infty}^{\infty} \exp(i\xi\tau) \Bigg\{ y_2(\tau + \zeta_>)\, y_1(\tau + \zeta_<) \\
&\qquad - \frac{y_1'(\tau) + q\, y_1(\tau)}{y_2'(\tau) + q\, y_2(\tau)}\, y_2(\tau + \zeta_1)\, y_2(\tau + \zeta_2) \Bigg\} d\tau \\
&= -\frac{1}{8\pi}\left(\frac{2}{ka}\right)^{1/3} \exp(-ika\phi)\, \sqrt{\xi}\, \Phi(\xi, \zeta_1, \zeta_2)
\end{aligned}
\tag{3.25}
$$

This result is valid only for very small heights

$$h_1 = r_1 - a \ll a, \qquad h_2 = r_2 - a \ll a$$

This result is essentially the result of van der Pol and Bremmer, Pryce and Freehafer, Burrows and Gray, and others who have studied the "radio problem."

The "optics problem" starts from the Fourier integral

$$U(r, \phi; ka, Z) = \frac{1}{2}\int_{-\infty}^{\infty} \exp\left[-i\nu(\phi - \pi/2)\right] \left\{ H_\nu^{(1)}(kr) - \frac{H_\nu^{(1)'}(ka) - iZ\,H_\nu^{(2)}(ka)}{H_\nu^{(2)'}(ka) - iZ\,H_\nu^{(2)}(ka)}\; H_\nu^{(2)}(kr) \right\} d\nu \tag{3.26}$$

For $r = a$, it reduces to

$$U(a, \phi; ka, Z) = -\frac{2i}{\pi ka}\int_{-\infty}^{\infty} \frac{\exp(-i\nu\phi)}{H_\nu^{(2)'}(ka) - iZ\,H_\nu^{(2)}(ka)}\, d\nu$$

$$\approx \exp\left[-ika(\phi - \pi/2)\right] \frac{1}{\sqrt{\pi}} \int_{-\infty}^{\infty} \frac{\exp(i\,x\,\tau)}{y_2'(\tau) + q\,y_2(\tau)}\, d\tau \tag{3.27}$$

where

$$x = \left(\frac{ka}{2}\right)^{1/3}\left(\phi - \frac{\pi}{2}\right)$$

For $r \to \infty$; it is customary to use the asymptotic estimate

$$H_\nu^{(2)}(kr) = \sqrt{\frac{2}{\pi kr}}\; \exp\left[-i(kr - \pi/4) + i\nu\,\pi/2\right] \tag{3.28}$$

We then find that

$$U(r, \phi; ka, Z) \xrightarrow[r \to \infty]{} \exp(ika\cos\phi) - \frac{1}{2}\sqrt{\frac{2}{\pi kr}}\; \exp\left[-i(kr - \pi/4)\right] \int_{-\infty}^{\infty} \exp\left[-i\nu(\phi - \pi)\right]$$

$$\frac{H_\nu^{(1)'}(ka) - iZ\,H_\nu^{(1)}(ka)}{H_\nu^{(2)'}(ka) - iZ\,H_\nu^{(2)}(ka)}\, d\nu \tag{3.29}$$

$$\approx \exp(ika\cos\phi) + \frac{1}{2}\sqrt{\frac{2}{\pi kr}}\; \exp\left[-i(kr - \pi/4)\right] \exp\left[-ika(\phi - \pi)\right]$$

$$\left(\frac{ka}{2}\right)^{1/3} \int_{-\infty}^{\infty} \exp(i\mu\tau)\, \frac{y_1'(\tau) + q\,y_1(\tau)}{y_2'(\tau) + q\,y_2(\tau)}\, d\tau$$

where

$$\mu = \left(\frac{ka}{2}\right)^{1/3} (\phi - \pi)$$

The distinction between the asymptotic estimate obtained for the "radio problem" and the "optics problem" stems from the use of two different asymptotic estimates for the Hankel function, namely

$$H_\nu^{(2)}(kr) \xrightarrow[r \to a]{} \frac{i}{\sqrt{\pi}} \; (2/ka)^{1/3} \; y_2(\tau + \zeta)$$

$$H_\nu^{(2)}(kr) \xrightarrow[r \to \infty]{} \sqrt{\frac{2}{\pi kr}} \; \exp\left[-i(kr - \pi/4) + i\nu\,\pi/2 \right] \tag{3.30}$$

In the present work we employ an approximation of the form

$$H_\nu^{(2)}(kr) \approx \frac{i}{\sqrt{\pi}} \left(\frac{2}{ka}\right)^{1/3} \exp\left[-ik(T - a\,\alpha) + i(ka/2)^{1/3} \alpha\tau + i\,\frac{2}{3}\,\zeta^{3/2} - i\zeta^{1/2}\tau \right] y_2(\tau + \zeta) \tag{3.31}$$

where

$$\alpha = \cos^{-1} a/r \quad , \quad T = \sqrt{r^2 - a^2} \quad , \quad \zeta = (ka/2)^{2/3} (r^2 - a^2)/a^2$$

This result has the advantage of leading, when $r \to a$ and $r \to \infty$, to the forms given above for these cases. The use of this approximation leads to

$$U(r_2, \phi; r_1, 0; ka, Z) \approx -\frac{i}{8\pi} \; (2/ka)^{1/3} \exp -i\left[k(T_1 + S + T_2) - \pi/4\right] \; (2/ka)^{1/3}$$

$$\left\{ \frac{\exp\left[i\,(\phi_3 + 3\pi/4)\right]}{2\sqrt{\pi}} \; \sqrt{d} \; \Phi\,(d, h_1, h_2) \right\} \tag{3.32}$$

where

$$d = (ka/2)^{1/3} \phi + \sqrt{h_1} + \sqrt{h_2}$$

$$h_1 = (ka/2)^{2/3} (r_1^2 - a^2)/a^2 \quad , \quad h_2 = (ka/2)^{2/3} (r_2^2 - a^2)/a^2 \tag{3.33}$$

$$T_1 = \sqrt{r_1^2 - a^2} \quad , \quad S = a\,\phi \quad , \quad T_2 = \sqrt{r_2^2 - a^2}$$

and

$$\phi_3 = (2/3)\, h_1^{3/2} + (2/3)\, h_2^{3/2} \tag{3.34}$$

This more general formula reduces to both the "radio" and "optics" problems. It is expressed in terms of the function already used in the radio problem, however the argument has a different physical interpretation. We postpone further discussion of this application until a later volume in this series. The remainder of this volume will be devoted to developing properties and representations for the diffraction integral $\Phi(d, h_1, h_2)$.

Section 4
NOTATION FOR THE DIFFRACTION FORMULA*

The Fourier integral introduced by Pryce in 1941

$$\Phi(d, \zeta_1, \zeta_2) = 1/\sqrt{d}\int_{-\infty}^{\infty} \exp(i\tau d)\left[y_2(\zeta_> + \tau)y_1(\zeta_< + \tau) + \Gamma \frac{y_1(\tau)}{y_2(\tau)}\, y_2(\zeta_1 + \tau)y_2(\zeta_2 + \tau)\right] d\tau$$

$$\Gamma = -\frac{y_1'(\tau) - ikh_o Z\, y_1(\tau)}{y_2'(\tau) - ikh_o Z\, y_2(\tau)}$$

provides an analytical continuation to all values of d, ζ_1, ζ_2, for the residue series

$$\Phi(d, \zeta_1, \zeta_2) = -4\pi/\sqrt{d} \sum_{m=1}^{\infty} \frac{\exp(i\tau_m d)}{1 - \tau_m/(k\zeta_o Z)^2}\, U_m(\zeta_1)\, U_m(\zeta_2)$$

$$y_2'(\tau_m) - ik\zeta_o Z\, y_2(\tau_m) = 0$$

$$U_m(\zeta_1) = i\, y_2(\tau_m + \zeta_1)/y_2'(\tau_m)$$

We will now show that this is precisely the van der Pol-Bremmer diffraction formula introduced in 1938 (Ref. 6), namely

$$F(x, x_1, x_2) = \sqrt{2\pi x}\, \exp(i\pi/4) \sum_{s=0}^{\infty} f_s(x_1) f_s(x_2)\, \frac{\exp(i\tau_s x)}{2\tau_s - 1/\delta^2} \qquad (4.1)$$

---

*In this section, and in all subsequent sections, we employ $\exp(-i\omega t)$ time dependence.

$$\delta \sqrt{-2\tau_s}\; H^{(1)}_{2/3}\left[\frac{1}{3}(-2\tau_s)^{3/2}\right] + \exp(i\,\pi/3)\, H^{(1)}_{1/3}\left[\frac{1}{3}(-2\tau_s)^{3/2}\right] = 0 \qquad (4.2)$$

$$f_s(x_j) = \sqrt{\frac{x^2 - 2\tau_s}{-2\tau_s}}\;\frac{H^{(1)}_{1/3}\left[\frac{1}{3}(x_j^2 - 2\tau_s)^{3/2}\right]}{H^{(1)}_{1/3}\left[\frac{1}{3}(-2\tau_s)^{3/2}\right]} \qquad (4.3)$$

$$= -\frac{\exp(-i\,\pi/3)}{\delta\sqrt{-2\tau_s}}\;\frac{H^{(1)}_{1/3}\left[\frac{1}{3}(x^2 - 2\tau_s)^{3/2}\right]}{H^{(1)}_{2/3}\left[\frac{1}{3}(-2\tau_s)^{3/2}\right]}$$

$$x = (ka)^{1/3}\,\theta = (ka)^{1/3}\,(d/a) \qquad (4.4)$$

$$\delta = i\,\frac{k_1^2/k^2}{(ka)^{1/3}\sqrt{k_1^2/k^2 - 1}} = i\,\frac{1}{(ka)^{1/3}\,Z} \qquad (4.5)$$

$$x_j = (ka)^{1/3}\sqrt{2\,h_j/a} \qquad (4.6)$$

In order to compare the residue series of Pryce and Freehafer with that of van der Pol and Bremmer, we first take the complex conjugate of the P-F formula (since P-F use $\exp(i\omega t)$, whereas P-B use $\exp(-i\omega t)$ time dependence),

$$\bar{\Phi}(\xi, \zeta_1, \zeta_2) = -\frac{4\pi}{\sqrt{\xi}}\sum_{m=1}^{\infty}\frac{\exp(-i\,\bar{\tau}_m\xi)}{1 - \bar{\tau}_m/(k\,h_o\,\bar{Z})^2}\;\bar{U}_m(\zeta_1)\,\bar{U}_m(\zeta_2)$$

$$y_1'(\bar{\tau}_m) + i\,k\,h_o\,\bar{Z}\,y_1(\bar{\tau}_m) = 0$$

$$\bar{U}_m(\zeta) = -i\,\frac{y_1(\bar{\tau}_m + \zeta)}{y_1'(\bar{\tau}_m)}$$

We now use the properties

$$y_1(\tau) = \sqrt{\frac{\pi}{3}} \exp(-i\,\pi/3)\, \tau^{1/2}\, H^{(1)}_{1/3}\left(\frac{2}{3}\tau^{3/2}\right) \tag{4.7}$$

$$y_1'(\tau) = \sqrt{\frac{\pi}{3}} \exp(i\,\pi/3)\, \tau\, H^{(1)}_{2/3}\left(\frac{2}{3}\tau^{3/2}\right) \tag{4.8}$$

in order to write

$$\sqrt{\bar{\tau}_m}\; H^{(1)}_{2/3}\left(\frac{2}{3}\bar{\tau}_m^{3/2}\right) - (i\,k h_o \bar{Z}) \exp(i\;\pi/3)\, H^{(1)}_{1/3}\left(\frac{2}{3}\bar{\tau}_m^{3/2}\right) = 0$$

$$\bar{U}_m(\zeta) = i \exp(-i\,2\pi/3) \frac{\sqrt{\zeta + \bar{\tau}_m}}{\bar{\tau}_m} \frac{H^{(1)}_{1/3}\left[\frac{2}{3}\left(\zeta + \bar{\tau}_m\right)^{3/2}\right]}{H^{(1)}_{2/3}\left[\frac{2}{3}\left(\bar{\tau}_m\right)^{3/2}\right]}$$

$$= \frac{1}{k h_o \bar{Z}} \sqrt{\frac{\zeta + \bar{\tau}_m}{\bar{\tau}_m}} \frac{H^{(1)}_{1/3}\left[\frac{2}{3}\left(\zeta + \bar{\tau}_m\right)^{3/2}\right]}{H^{(1)}_{1/3}\left[\frac{2}{3}\left(\bar{\tau}_m\right)^{3/2}\right]}$$

A comparison of these results with the van der Pol - Bremmer form reveals that

$$x = \sqrt[3]{2}\;\zeta$$

$$x_j^2 = (1/\sqrt[3]{2})\;\zeta_j, \quad j = 1, 2$$

$$\tau_{s-1} = -(1/\sqrt[3]{2})\;\tau_s$$

$$\delta = i(ka)^{-1/3}(\bar{Z})^{-1} = i\,2^{-1/3}(k h_o)^{-1/3}(\bar{Z})^{-1}$$

$$f(x_j) = (ka/2)^{1/3}\,\bar{Z}\;\bar{U}(\zeta_j)$$

$$\underbrace{F(x, x_1, x_2)}_{\text{van der Pol-Bremmer}} = \underbrace{-\frac{\xi}{\sqrt[4]{\pi}} \exp(i\pi/4)\,\bar{\Phi}(\xi, \zeta_1, \zeta_2)}_{\text{Pryce-Freehafer}} \tag{4.9}$$

The notation $y_1(\tau)$, $y_2(\tau)$ employed by Freehafer for the Airy functions differs slightly from that of Pryce who defined

$$f(\tau) = \frac{1}{\pi}\int_0^\infty \left\{\exp\left(-\frac{1}{3}x^3 - x\tau\right) - i\exp\left(i\frac{1}{3}x^3 - ix\tau\right)\right\} dx \tag{4.10}$$

$$g(\tau) = \frac{1}{\pi}\int_0^\infty \cos\left(\frac{1}{3}x^3 - x\tau\right) dx \tag{4.11}$$

We easily observe that

$$\sqrt{\pi}\, f(\tau) = y_2(\tau)$$

$$\underbrace{-i\,2\sqrt{\pi}\; g(\tau)}_{\text{Pryce}} = \underbrace{y_1(\tau) + y_2(\tau)}_{\text{Freehafer}}$$

The Fourier integral

$$P(\xi, \zeta_1, \zeta_2) = \frac{1}{2}\int_{-\infty}^{\infty} \exp(i\xi\tau)\left[g(\tau + \zeta_<) - \frac{g'(\tau) - i\gamma g(\tau)}{f'(\tau) - i\gamma f(\tau)} f(\tau + \zeta_<)\right] f(\tau + \zeta_>)\, d\tau \tag{4.12}$$

which appears in Pryce's work is identical with Freehafer's

$$\Phi(\xi, \zeta_1, \zeta_2) = \frac{1}{\sqrt{\xi}}\int_{-\infty}^{\infty} \exp(i\xi\tau)\left[y_1(\tau + \zeta_<) - \frac{y_1'(\tau) - ikh_0 Z y_1(\tau)}{y_2'(\tau) - ikh_0 Z y_2(\tau)} y_2(\tau + \zeta_<)\right] y_2(\tau + \zeta_>)\, d\tau$$

except for a normalization factor

$$-4\pi i\, P(\xi, \zeta_1, \zeta_2) = \sqrt{\xi}\, \Phi(\xi, \zeta_1, \zeta_2) \tag{4.13}$$

The notations of Pryce and Freehafer have not been accepted by later writers. For example, in the July 1959 issue of the Transactions of the Professional Group on Antennas and Propagation of the I.R.E., Tukizi (Ref. 11) has employed an integral

$$T(r, z_1, z_2) = \int_{-\infty}^{\infty} \exp(i\, k_o\, r\, \zeta)\, u(z, \zeta)\, d\zeta$$

where

$$u(z, \zeta) = -\frac{2}{W} \exp(i\, 2\pi/3)\, h_1(s_>) \left\{ h_1\left[s_< \exp(-i\, 2\pi/3)\right] - \frac{\left(\frac{d}{ds} + \tau\right) h_1\left[s_o \exp(-i\, 2\pi/3)\right]}{\left(\frac{d}{ds} + \tau\right) h_1(s_o)} h_1(s_<) \right\}$$

$$h_1(s) = \left(\frac{2}{3} s^{3/2}\right)^{1/3} H^{(1)}_{1/3}\left(\frac{2}{3} s^{3/2}\right)$$

$$\zeta = \gamma z - \beta s \quad , \qquad s = \beta^{-1} (\gamma z - \zeta)$$

$$W = -i\, (4/\pi)\, (3/2)^{1/3}\, \gamma/\beta$$

$$\tau = i\, \beta/\gamma\, (k_o/k_1)^2\, (k_1^2 - k_o^2)^{1/2}$$

Let us now translate Tukizi's integral into Freehafer's integral by using Freehafer's Eq. (335).(Ref. 8)

$$h_1(\zeta) = \frac{(12)^{1/6}}{\sqrt{\pi}} \exp(i\, \pi/3)\, y_1(\zeta)$$

and Eq. (311)

$$y_1\left[\zeta \exp(-i\, 2\pi/3)\right] = \exp(i\, 2\pi/3)\, y_3(\zeta)$$

Therefore

$$h_1 \left[\zeta \exp(-i\ 2\pi/3) \right] = -\frac{(12)^{1/6}}{\sqrt{\pi}} \quad y_3(\zeta) = \frac{(12)^{1/6}}{\sqrt{\pi}} \left\{ y_1(\zeta) + y_2(\zeta) \right\}$$

and Tukizi's $u(z, \zeta)$ takes the form

$$u(z, \zeta) = \frac{2}{W} \frac{(12)^{1/3}}{\pi} y_1(s_>) \left\{ y_2(s_<) - \frac{\left(\frac{d}{ds_o} + \tau\right) y_2(s_o)}{\left(\frac{d}{ds_o} + \tau\right) y_1(s_o)} \quad y_1(s_<) \right\}$$

If we now replace Tukizi's integration variable ζ by τ, where

$$\tau = -\beta^{-1} \zeta$$

and replace Tukizi's impedance τ by

$$i k h_o Z = \tau$$

we can write

$$u(z, -\beta\tau) = i h_o y_1(\tau + h_>) \left\{ y_2(\tau + h_<) - \frac{y_2'(\tau) + i k h_o Z y_2(\tau)}{y_1'(\tau) + i k h_o Z y_1(\tau)} \quad y_1(\tau + h_<) \right\}$$

where

$$h_o = \beta/\gamma, \qquad h_1 = z_1/h_o \quad , \qquad h_2 = z_2/h_o$$

We also define

$$d = k_o h_o \gamma r = (k_o \beta r)$$

We can then show that

$$T(r, z_1, z_2) = \beta \int_{-\infty}^{\infty} \exp(-i d\tau)\, u(z, -\beta\tau)\, d\tau$$

$$= i h_o \beta \int_{-\infty}^{\infty} \exp(-id\tau)\, y_1(\tau + h_>) \left\{ y_2(\tau + h_<) - \frac{y_2'(\tau) + i k h_o Z y_2(\tau)}{y_1'(\tau) + i k h_o Z y_1(\tau)}\, y_1(\tau + h_<) \right\} d\tau$$

If we now examine the complex conjugate of Freehafer's function $\Phi(d, h_1, h_2)$,

$$\bar{\Phi}(d, h_1, h_2) = \frac{1}{\sqrt{d}} \int_{-\infty}^{\infty} \exp(-id\tau)\, y_1(\tau + h_>) \left\{ y_2(\tau + h_<) - \frac{y_2'(\tau) + i k h_o Z y_2(\tau)}{y_1'(\tau) + i k h_o Z y_1(\tau)}\, y_1(\tau + h_<) \right\} d\tau$$

we see immediately that

$$T(r, z_1, z_2) = i h_o \beta \sqrt{d}\, \bar{\Phi}(d, h_1, h_2) = -4\pi h_o \beta \bar{P}(d, h_1, h_2) \qquad (4.14)$$

$$r = d/(k_o \beta) \qquad = d/(k_o \beta)$$

$$z_1 = h_o h_1 \qquad = h_o h_1$$

$$\underbrace{z_2}_{\text{Tukizi}} = \underbrace{h_o h_2}_{\text{Freehafer}} \qquad = \underbrace{h_o h_2}_{\text{Pryce}}$$

The integral representations for the van der Pol-Bremmer diffraction formula used by Freehafer and Pryce were apparently known to Tukizi because he cites these authors as references. However, since no standard form for this integral has been adopted, the casual reader may not be aware of the fact that the integral used by Tukizi has already been used by other authors.*

It is a curious fact that this classical diffraction formula is known by so many seemingly different expressions. In contrast to the variety of forms used by Western authors, all Soviet authors employ a uniform notation. In 1946, Fock (Ref. 12) had introduced an integral of the form

$$V_1(\xi, \zeta, q) = \frac{i}{2\sqrt{\pi}} \int_{-\infty}^{\infty} \exp(i\xi t) \left\{ w_2(t-\zeta) - \frac{w_2'(t) - q w_2(t)}{w_1'(t) - q w_1(t)} \; w_1(t-\zeta) \right\} dt \qquad (4.15)$$

where

$$w_{1,2}(t) = \frac{1}{\sqrt{\pi}} \int_0^{\infty} \exp\left(-\frac{1}{3}x^3 + xt\right) dx \pm i \frac{1}{\sqrt{\pi}} \int_0^{\infty} \exp\left(i\frac{1}{3}x^3 + ixt\right) dx \qquad (4.16)$$

Later, in 1949, Fock defined a more general integral

$$V(\xi, \zeta_1, \zeta_2, q) = \frac{\exp(i\pi/4)}{2} \sqrt{\frac{\xi}{\pi}} \int_{-\infty}^{\infty} \exp(i\xi t) w_1(t-\zeta_>) \left\{ w_2(t-\zeta_<) - \frac{w_2'(t) - q w_2(t)}{w_1'(t) - q w_1(t)} \; w_1(t-\zeta_<) \right\} dt \qquad (4.17)$$

---

*The deductions made by Tukizi in Part I of his paper are not correct since he assumes in his Eq. (21) that he can use the "saddle point method" on a string of saddle points which are close together. The "saddle point method" requires well separated saddle points. For example, if two saddle points are close together one must use Airy integrals, or if three saddle points are close together one must use parabolic cylinder functions. This vital restriction to well separated saddle points invalidates all of Tukizi's results. In particular, the agreement found with experiment in Part II of his paper is merely a coincidence. Tukizi's criticism of the classical diffraction theory is unfounded. The work of Carroll and Ring, which is cited by Tukizi in order to support his conclusions has no relation to the classical theory for a homogeneous atmosphere.

Since

$$w_1(t) = -y_1(-t)$$

$$\underbrace{w_2(t)}_{\text{Fock}} = \underbrace{y_2(-t)}_{\text{Freehafer}}$$

we can show that

$$\underbrace{V(\xi, \zeta_1, \zeta_2, q)}_{\text{Fock}} = \underbrace{-\frac{\xi}{2\sqrt{\pi}} \exp(i\pi/4)\, \bar{\Phi}(\xi, \zeta_1, \zeta_2)}_{\text{Freehafer}} \tag{4.18}$$

The Soviet form is related to the form used by van der Pol and Bremmer according to the following rules:

$$V(\xi, \zeta_1, \zeta_2, q) = 2F(x, x_1, x_2) \tag{4.19}$$

$$\sqrt[3]{2}\,\xi = x \tag{4.20}$$

$$\zeta_1 = \sqrt[3]{2}\, x_1^2 \tag{4.21}$$

$$\zeta_2 = \sqrt[3]{2}\, x_2^2 \tag{4.22}$$

$$\sqrt[3]{2}\, q = -\delta^{-1} \tag{4.23}$$

The close resemblance between the notations of Freehafer and Pryce is a result of the close cooperation between British and American research groups during World War II. However, it is at first glance, quite surprising that the Soviet research group in the same time period introduced an almost identical form for the related integrals.

$$V_1(x, y, q) = \frac{1}{\sqrt{\pi}} \int_{-\infty}^{\infty} \exp(ixt) \left\{ v(t-y) - \frac{v'(t) - q\,v(t)}{w_1'(t) - q\,w_1(t)}\, w_1(t-y) \right\} dt$$

$$V(\xi, \zeta_1, q) = \frac{\exp(i\,\pi/4)\sqrt{\xi}}{2\sqrt{\pi}} \int_{-\infty}^{\infty} \exp(i\xi t) \left\{ w_2(t-\zeta_<) - \frac{w_2'(t) - q\,w_2(t)}{w_1'(t) - q\,w_1(t)}\, w_1(t-\zeta_<) \right\} w_1(t-\zeta_>)\, dt$$

which were introduced by Fock in 1946 and 1949, respectively.

The resemblance of the notations is due to the fact that these authors had to employ solutions of Airy's differential equation

$$\frac{d^2 y(x)}{dx^2} + \alpha\, x\, y(x) = 0$$

Pryce and Freehafer choose $\alpha = 1$, but Miller (Ref. 16) and Fock choose $\alpha = -1$. The choice of $|\alpha| = 1$ automatically fixed a set of natural units of distance which accounts for the fact that

$$\underbrace{x = \xi}$$

$$\underbrace{Z}_{\text{Freehafer}} = \underbrace{\zeta}_{\text{Fock}}$$

It is worth observing at this point that Fock employs an $\exp(-i\omega t)$ time dependence which is a common practice among physicists. However, Pryce and Freehafer use an $\exp(i\omega t)$ time dependence which is a common practice among electrical engineers. In this report we will employ the $\exp(-i\omega t)$ time dependence. We take this opportunity to point out that the complex conjugate of $\overline{V}$ is to be denoted by

$$\overline{V(\xi, \zeta_1, \zeta_2, q)} = \frac{\exp(i\,\pi/4)\sqrt{\xi}}{2\sqrt{\pi}} \int_{-\infty}^{\infty} \exp(-i\xi t) \left\{ w_1(t-\zeta_>) - \frac{w_1'(t) - \bar{q}\,w_1(t)}{w_2'(t) - \bar{q}\,w_2(t)}\, w_2(t-\zeta_<) \right\} w_2(t-\zeta_>)\, dt \tag{4.24}$$

where, for real values of t,

$$w_2(t) = \overline{w_1(t)} = y_2(-t)$$

The reader is cautioned that Fock's definitions of $w_1(t)$ and $w_2(t)$ have not been universally accepted. Thus, for example, in Wait's Electromagnetic Radiation from Cylindrical Structures (Ref. 13) we find functions $w_1(t)$, $w_2(t)$ with the properties

$$\underset{\text{Wait}}{\underline{w_2(t)}} = \underset{\text{Fock}}{\underline{w_1(t)}}$$

The notations introduced by Freehafer and Pryce have not been used by later authors, whereas the notations of Fock have been employed by all recent Soviet authors (Ref. 14) and also by some authors (Ref. 15) outside the Soviet Union. We will adopt Fock's notation for the diffraction formula for the purpose of theoretical manipulations, but when numerical results are desired we will change to Miller's (Ref. 16) notation because of the extensive tables, contained in The Airy Integral.

A useful feature of Miller's table is that values are given for certain amplitude functions $F(t)$, $G(t)$ and phase functions $\chi(t)$, $\psi(t)$ in terms of which we can write

$$w_1(t) = \sqrt{\pi}\left\{Bi(t) + i\,Ai(t)\right\} = \sqrt{\pi}\;F(t)\exp\left[i\chi(t)\right] \tag{4.25}$$

$$w_1'(t) = \sqrt{\pi}\left\{Bi'(t) + i\,Ai'(t)\right\} = \sqrt{\pi}\;G(t)\exp\left[i\psi(t)\right] \tag{4.26}$$

$$v(t) = \sqrt{\pi}\;F(t)\sin\chi(t) \tag{4.27}$$

$$v'(t) = \sqrt{\pi}\;G(t)\sin\psi(t) \tag{4.28}$$

A sample of Miller's values of $F(x)$, $\chi(x)$, $G(x)$, $\psi(x)$ is given in Table 2. As an application of these tables, we observe that

$$\exp(i\xi t)\,w_1(t-\zeta_>)\left\{w_2(t-\zeta_<) - \frac{w_2'(t)}{w_1'(t)}\,w_1(t-\zeta_<)\right\} = \pi F(t-\zeta_1)\,F(t-\zeta_2)\left\{\exp(i\,\phi_1) - \exp(i\,\phi_2)\right\} \tag{4.29}$$

Table 2

SAMPLES OF MILLER'S TABLES OF F, χ, G, ψ

x	F(-x)	$\chi(-x)$ °	G(-x)	$\psi(-x)$ °	x	F(x)	$\chi(x)$ °	G(x)	$-\psi(x)$ °
0.0	0.71005 611	30.00000	0.51763 881	30.00000	0.0	0.71005 61	30.00000	0.51763 88	30.00000
0.1	0.68552 507	33.74913	0.51925 039	29.66075	0.1	0.73742 26	26.51447	0.51959 57	29.66093
0.2	0.66345 804	37.76132	0.52350 000	28.65455	0.2	0.76805 95	23.29193	0.52626 79	28.66019
0.3	0.64353 733	42.03506	0.52955 356	27.01061	0.3	0.80247 59	20.33037	0.53902 12	27.05201
0.4	0.62549 094	46.56797	0.53714 470	24.76768	0.4	0.84126 90	17.62629	0.55942 06	24.93341
0.5	0.60908 568	51.35707	0.54554 400	21.96798	0.5	0.88513 91	15.17449	0.58918 93	22.44081
0.6	0.59412 131	56.39882	0.55453 031	18.65342	0.6	0.93490 77	12.96802	0.63015 98	19.73567
0.7	0.58042 561	61.68934	0.56386 625	14.86349	0.7	0.99153 98	10.99809	0.68424 24	16.98232
0.8	0.56785 017	67.22443	0.57337 813	10.63419	0.8	1.05616 84	9.25412	0.75343 20	14.32479
0.9	0.55626 685	72.99975	0.58294 027	5.99774	0.9	1.13012 60	7.72381	0.83986 51	11.87073
1.0	0.54556 477	79.01083	0.59246 276	0.98265	1.0	1.21497 97	6.39335	0.94592 00	9.68586
1.1	0.53564 775	85.25316	0.60188 233	4.38599	1.1	1.31257 57	5.24766	07434 93	7.79787
1.2	0.52643 218	91.72222	0.61115 536	10.08621	1.2	1.42509 07	4.27074	1.22842 91	6.20543
1.3	0.51784 520	98.41356	0.62025 273	16.09371	1.3	1.55509 60	3.44604	1.41212 23	4.88838
1.4	0.50982 315	105.32277	0.62915 594	22.40654	1.4	1.70563 38	2.75689	1.63025 64	3.81641
1.5	0.50231 027	112.44556	0.63785 424	28.99477	1.5	1.88031 09	2.18684	1.88872 44	2.95546
1.6	0.49525 758	119.77774	0.64634 251	35.85020	1.6	2.08341 30	1.72008	2.19472 03	2.27172
1.7	0.48862 198	127.31524	0.65461 965	42.96112	1.7	2.32004 36	1.34172	2.55702 03	1.73402
1.8	0.48236 540	135.05411	0.66268 746	50.31708	1.8	2.59629 55	1.05806	2.98632 63	1.31483
1.9	0.47645 415	142.99054	0.67054 972	57.90874	1.9	2.91945 91	0.79671	3.49568 83	0.99063
2.0	0.47085 833	151.12086	0.67821 159	65.72767	2.0	3.29327 99	0.60669	4.10102 57	0.74175
2.1	0.46555 133	159.44152	0.68567 912	73.76630	2.1	3.74327 34	0.45846	4.82177 37	0.55203
2.2	0.46050 945	167.94910	0.69295 888	82.01770	2.2	4.26711 34	0.34388	5.68168 61	0.40839
2.3	0.45571 145	176.64033	0.70005 778	90.47560	2.3	4.88511 04	0.25606	6.70983 30	0.30034
2.4	0.45113 833	185.51205	0.70698 280	99.13425	2.4	5.61580 13	0.18932	7.94184 42	0.21960
2.5	0.44677 300	194.56121	0.71374 091	107.98836	2.5	6.48167 98	0.13901	9.42145 99	0.15964

where

$$\phi_1 = \xi t + \chi(t-\zeta_>) - \chi(t-\zeta_<) \tag{4.30}$$

$$\phi_2 = \xi t + \chi(t-\zeta_>) + \chi(t-\zeta_<) - 2\psi(t) \tag{4.31}$$

This form is extremely useful for computational purposes. We also observe that Miller shows that

$$\frac{d\chi(t)}{dt} = -\frac{1}{\pi F^2(t)} \qquad \frac{d\psi(t)}{dt} = \frac{t}{\pi G^2(t)} \tag{4.32}$$

Therefore, we can write

$$\frac{d\phi_1(t)}{dt} = \xi - \frac{1}{\pi F^2(t-\zeta_>)} + \frac{1}{\pi F^2(t-\zeta_<)} \tag{4.33}$$

$$\frac{d\phi_2(t)}{dt} = \xi - \frac{1}{\pi F^2(t-\zeta_>)} - \frac{1}{\pi F^2(t-\zeta_<)} - \frac{2t}{\pi G^2(t)} \tag{4.34}$$

This form is very useful in connection with the problem of finding the points of stationary phase. The behavior of $\chi'(t)$ and $\psi'(t)$ for real values of t is illustrated in Fig. 10.

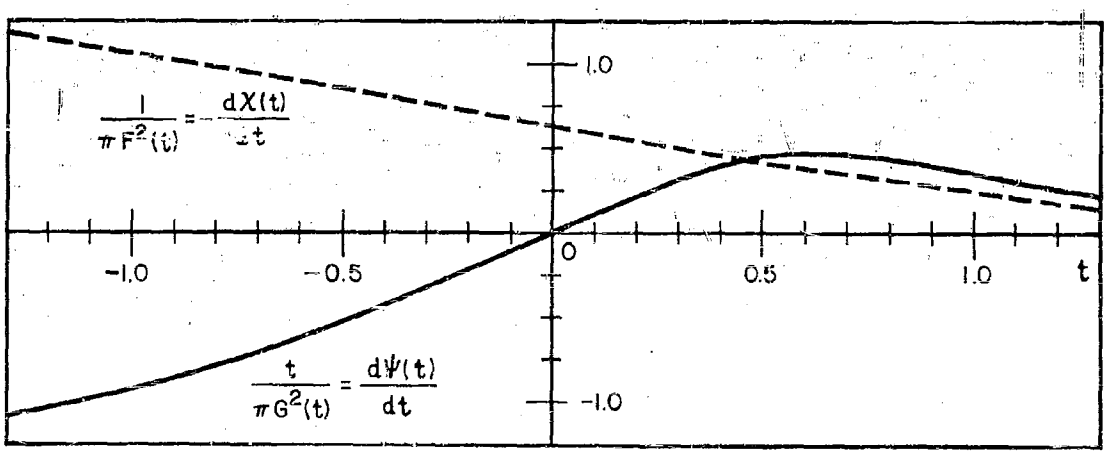

Fig. 10 Behavior of $\chi'(t)$, $\psi'(t)$ for Real Values of t

For large negative values of x, these amplitude and phase functions can be computed from the asymptotic expansions given by Miller

$$\left|F(-x)\right|^2 \sim \frac{1}{\pi x^{1/2}}\left(1 - \frac{1\cdot 3\cdot 5}{1!\,96}\frac{1}{x^3} + \frac{1\cdot 3\cdot 5\cdot 7\cdot 9\cdot 11}{2!\,96^2}\frac{1}{x^6} - \frac{1\cdot 3\cdot 5\cdot 7\cdot 9\cdot 11\cdot 13\cdot 15\cdot 17}{3!\,96^3}\frac{1}{x^9} + \cdots\right) \tag{4.35}$$

$$\left|G(-x)\right|^2 \sim \frac{1}{\pi}x^{1/2}\left(1 + \frac{1\cdot 3}{1!\,96}\frac{7}{x^3} - \frac{1\cdot 3\cdot 5\cdot 7\cdot 9}{2!\,96^2}\frac{13}{x^6} + \frac{1\cdot 3\cdot 5\cdot 7\cdot 9\cdot 11\cdot 13\cdot 15}{3!\,96^3}\frac{19}{x^9} - \cdots\right) \tag{4.36}$$

$$\chi(-x) - \frac{1}{4}\pi \sim \frac{2}{3}x^{3/2}\left(1 - \frac{5}{32}\frac{1}{x^3} + \frac{1105}{6144}\frac{1}{x^6} - \frac{82825}{65536}\frac{1}{x^9} + \frac{1282031525}{58720256}\frac{1}{x^{12}} - \cdots\right) \tag{4.37}$$

$$\psi(-x) + \frac{1}{4}\pi \sim \frac{2}{3}x^{3/2}\left(1 + \frac{7}{32}\frac{1}{x^3} - \frac{1463}{6144}\frac{1}{x^6} + \frac{4\,95271}{3\,27680}\frac{1}{x^9} - \frac{206530429}{8388608}\frac{1}{x^{12}} + \cdots\right) \tag{4.38}$$

For large positive values of x it is more convenient to compute $Ai(x)$, $Bi(x)$ and $Ai'(x)$, $Bi'(x)$ from the asymptotic expansions

$$Ai(x) \sim \frac{1}{2}\pi^{-1/2}x^{-1/4}e^{-\xi}\left(1 - \frac{3\cdot 5}{1!\,216}\frac{1}{\xi} + \frac{5\cdot 7\cdot 9\cdot 11}{2!(216)^2}\frac{1}{\xi^2} - \frac{7\cdot 9\cdot 11\cdot 13\cdot 15\cdot 17}{3!\,(216)^3}\frac{1}{\xi^3} + \cdots\right) \tag{4.39}$$

$$Bi(x) \sim \pi^{-1/2}x^{-1/4}e^{\xi}\left(1 + \frac{3\cdot 5}{1!\,216}\frac{1}{\xi} + \frac{5\cdot 7\cdot 9\cdot 11}{2!\,(216)^2}\frac{1}{\xi^2} + \frac{7\cdot 9\cdot 11\cdot 13\cdot 15\cdot 17}{3!\,(216)^3}\frac{1}{\xi^3} + \cdots\right) \tag{4.40}$$

$$Ai'(x) \sim -\frac{1}{2}\pi^{-1/2}x^{1/4}e^{-\xi}\left(1 + \frac{3\cdot 7}{1!\,216}\frac{1}{\xi} - \frac{5\cdot 7\cdot 9\cdot 13}{2!(216)^2}\frac{1}{\xi^2} + \frac{7\cdot 9\cdot 11\cdot 13\cdot 15\cdot 19}{3!(216)^3}\frac{1}{\xi^3} - \cdots\right) \tag{4.41}$$

$$Bi'(x) \sim \pi^{-1/2}x^{1/4}e^{\xi}\left(1 - \frac{3\cdot 7}{1!\,216}\frac{1}{\xi} - \frac{5\cdot 7\cdot 9\cdot 13}{2!\,(216)^2}\frac{1}{\xi^2} - \frac{7\cdot 9\cdot 11\cdot 13\cdot 15\cdot 19}{3!\,(216)^3}\frac{1}{\xi^3} - \cdots\right) \tag{4.42}$$

where

$$\xi = \frac{2}{3}x^{3/2}$$

For small values of x one can use the Taylor series

$$Ai(x) = \alpha y_1 - \beta y_2 \qquad Bi(x) = 3^{1/2}(\alpha y_1 + \beta y_2)$$

$$y_1 = 1 + \frac{1}{3!}x^3 + \frac{1\cdot 4}{6!}x^6 + \frac{1\cdot 4\cdot 7}{9!}x^9 + \cdots \qquad y_2 = x + \frac{2}{4!}x^4 + \frac{2\cdot 5}{7!}x^7 + \frac{2\cdot 5\cdot 8}{10!}x^{10} + \cdots$$

$$\alpha = 3^{-2/3}/(-1/3)! = 0.35502\ 80538\ 87817 \qquad \beta = 3^{-1/3}/(-2/3)! = 0.25881\ 94037\ 92807 \tag{4.43}$$

The tables given by Miller in <u>The Airy Integral</u> are:

- $Ai(x)$ and $Ai'(x)$. $x = -20.00(0.01) + 2.00$. 8D
- $\text{Log}_{10}\, Ai(x)$ and $Ai'(x)/Ai(x)$. $x = 0.0(0.1)25.0(1)75$. 7-8D
- Zeros and Turning-Values of $Ai(x)$ and $Ai'(x)$. The first 50 of each. 8D
- $Bi(x)$ and Reduced Derivatives. $x = -10.0(0.1) + 2.5$. 7-8D
- Zeros and Turning-Values of $Bi(x)$ and $Bi'(x)$. The first 20 of each. 8D
- $\text{Log}_{10}\, Bi(x)$ and $Bi'(x)/Bi(x)$. $x = 0.0(0.1)10.0$. 7-8 D
- Auxiliary Functions. $F(x)$, $\chi(x)$, $G(x)$, $-\psi(x)$. $x = -80(1) - 30.0(0.1) + 2.5$. 8D

The notation pD is used to call attention to the fact that the tables are given to p decimals.

The availability of this excellent table makes it desirable to use a standard form for the diffraction formula which enables one to readily employ this data. In the 1941 work of Pryce, the notations

$$f(\tau) = Bi(-\tau) - i\,Ai(-\tau) = 2\exp(-i\,\pi/6)\;Ai\left[\exp(i\,\pi/3)\,\tau\right] \tag{4.44}$$

$$g(\tau) = Ai(-\tau) \tag{4.45}$$

were employed. Freehafer defined his Airy integrals to be

$$y_1(\tau) = \sqrt{\pi}\;\left\{-Bi(-\tau) - i\,Ai(-\tau)\right\} \tag{4.46}$$

$$y_2(\tau) = \sqrt{\pi}\;\left\{Bi(-\tau) - i\,Ai(-\tau)\right\} \tag{4.47}$$

$$y_3(\tau) = 2i\sqrt{\pi}\;Ai(-\tau) \tag{4.48}$$

whereas Fock defined

$$w_1(t) = \sqrt{\pi}\;\left\{Bi(t) + i\,Ai(t)\right\} \tag{4.49}$$

$$w_2(t) = \sqrt{\pi}\;\left\{Bi(t) - i\,Ai(t)\right\} \tag{4.50}$$

$$v(t) = \sqrt{\pi}\;Ai(t) \tag{4.51}$$

We will adopt the Soviet notation as the standard form for these Airy integrals when using the Fourier integral representation for the diffraction formula

$$\boxed{\begin{aligned} V(\zeta, \zeta_1, \zeta_2, q) &= \frac{\exp(i\,\pi/4)\sqrt{\xi}}{2\sqrt{\pi}}\int_{-\infty}^{\infty}\exp(i\xi t)\,w_1(t-\zeta_>)\left[w_2(t-\zeta_<) - \frac{w_2'(t) - q\,w_2(t)}{w_1'(t) - q\,w_1(t)}\,w_1(t-\zeta_<)\right]dt \\ &= \frac{\exp(-i\,\pi/4)\sqrt{\xi}}{\sqrt{\pi}}\int_{-\infty}^{\infty}\exp(i\xi t)\,w_1(t-\zeta_>)\left[v(t-\zeta_<) - \frac{v'(t) - q\,v(t)}{w_1'(t) - q\,w_1(t)}\,w_1(t-\zeta_<)\right]dt \end{aligned}} \tag{4.52}$$

The property $2i\,v(t) = w_1(t) - w_2(t)$ has been used to obtain the second form.

The residue series representations

$$V(\xi, \zeta_1, \zeta_2, q) = 2\sqrt{\pi\xi}\ \exp(i\,\pi/4) \sum_{s=1}^{\infty} \frac{\exp(i\xi t_s)}{t_s - q^2}\ \frac{w_1(t_s - \zeta_1)}{w_1(t_s)}\ \frac{w_1(t_s - \zeta_2)}{w_1(t_s)} \tag{4.53}$$

$$= -\,2\sqrt{\pi\xi}\ \exp(i\,\pi/4) \sum_{s=1}^{\infty} \frac{\exp(i\xi t_s)}{1 - \frac{t_s}{q^2}}\ \frac{w_1(t_s - \zeta_1)}{w_1'(t_s)}\ \frac{w_1(t_s - \zeta_2)}{w_1'(t_s)}$$

$$= 2\sqrt{\pi\xi}\ \exp(i\,\pi/4) \sum_{s=1}^{\infty} \frac{\exp(i\xi t_s)}{t_s w_1^2(t_s) - w_1'^2(t_s)}\ w_1(t_s - \zeta_1)\ w_1(t_s - \zeta_2)$$

where

$$w_1'(t_s) - q\,w_1(t_s) = 0 \tag{4.54}$$

have been used by Fock. We can also express these series in the form

$$\boxed{\begin{aligned} V(\xi, \zeta_1, \zeta_2, q) &= 2\sqrt{\pi\xi}\ \exp(-i\,\pi/12) \sum_{s=1}^{\infty} \frac{\exp\left[(-\sqrt{3} + i)(a_s/2)\xi\right]}{a_s - \exp(-i\,\pi/3)\,q^2}\ \frac{Ai\left[-a_s + \exp(-i\,\pi/3)\,\zeta_1\right]}{Ai(-a_s)} \\ &\quad \frac{Ai\left[-a_s + \exp(-i\,\pi/3)\,\zeta_2\right]}{Ai(-a_s)} \\ &= 2\sqrt{\pi\xi}\ \exp(-i\,\pi/12) \sum_{s=1}^{\infty} \frac{\exp\left[(-\sqrt{3} + i)(a_s/2)\xi\right]}{1 - \exp(i\,\pi/3)\,\frac{a_s}{q^2}}\ \frac{Ai\left[-a_s + \exp(-i\,\pi/3)\,\zeta_1\right]}{Ai'(-a_s)} \\ &\quad \frac{Ai\left[-a_s + \exp(-i\,\pi/3)\,\zeta_2\right]}{Ai'(-a_s)} \end{aligned}} \tag{4.55}$$

where $t_s = a_s \exp(i\,\pi/3)$ and

$$\boxed{Ai'(-a_s) + \exp(i\,\pi/3)\, q\, Ai(-a_s) = 0}$$

We will adopt this as a standard form for the residue series.

We define the roots α_s, β_s by means of

$$Ai(-\alpha_s) = 0 \qquad Ai'(-\beta_s) = 0$$

and observe that, for $q = 0$ and $q = \infty$, we obtain

$$V(\xi, \zeta_1, \zeta_2, 0) = 2\sqrt{\pi\xi}\, \exp(-i\,\pi/12) \sum_{s=1}^{\infty} \frac{\exp\left[(-\sqrt{3} + i)(\beta_s/2)\xi\right]}{\beta_s} \frac{Ai\left[-\beta_s + \exp(-i\,\pi/3)\,\zeta_1\right]}{Ai(-\beta_s)} \frac{Ai\left[-\beta_s + \exp(-i\,\pi/3)\,\zeta_2\right]}{Ai(-\beta_s)}$$

$$V(\xi, \zeta_1, \zeta_2, \infty) = 2\sqrt{\pi\xi}\, \exp(-i\,\pi/12) \sum_{s=1}^{\infty} \exp\left[(-\sqrt{3} + i)(\alpha_s/2)\xi\right] \frac{Ai\left[-\alpha_s + \exp(-i\,\pi/3)\,\zeta_1\right]}{Ai'(-\alpha_s)} \frac{Ai\left[-\alpha_s + \exp(-i\,\pi/3)\,\zeta_2\right]}{Ai'(-\alpha_s)}$$

The roots α_s, β_s and the turning values $Ai'(-\alpha_s)$, $Ai(-\beta_s)$ can be obtained from Miller's <u>The Airy Integral</u> where they are denoted by

$$a_s = -\alpha_s, \quad Ai'(a_s) = Ai'(-\alpha_s), \quad a_s' = -\beta_s, \quad Ai(a_s') = Ai(-\beta_s)$$

Since these roots (for $q = 0$ or $q = \infty$) are all negative, it is advantageous to follow Pryce and introduce α_s, β_s. In 1946 Miller published eight decimal values for the first fifty roots. More recently, Haines and (G. F.) Miller (Ref. 17) of the National Physical Laboratory (Teddington, England) have extended these results to obtain 15 decimal results for the first 56 roots.

These important tables are reproduced in Tables 3 and 4. This work by Haines, Miller, and their collaborators at National Physical Laboratory constitutes a major contribution to the solution of the problem of obtaining accurate values for the residue series when many terms have to be employed. [Note: Haines and (G. F.) Miller have also extended (J. C. P.)Miller's 8-decimal table of roots and turning values of $Bi(x)$, $Bi'(x)$.]

Table 3

ROOTS AND TURNING VALUES OF $Ai(-\alpha)$

s	α_s	$Ai'(-\alpha_s)$
1	2. 33810 74104 59767	+0. 70121 08227 20691
2	4. 08794 94411 30971	-0. 80311 13696 54864
3	5. 52055 98580 95551	+0. 86520 40258 94152
4	6. 78670 80900 71759	-0. 91085 07370 49602
5	7. 94413 35871 [illegible]	+0. 94733 57094 41568
6	9. 02265 08433 [illegible]	-0. 97592 28085 69499
7	10. 04017 [illegible]	+1. 00437 01226 60312
8	11. 00852 43037 33263	-1. 02773 86888 20786
9	11. 93601 [illegible]	+1. 04872 06485 88189
10	12. 82877 67528 [illegible]	-1. 06779 38591 57428
11	13. 69118 90352 [illegible]	+1. 08530 28313 50700
12	14. 52783 89517 75335	-1. 10150 45702 77497
13	15. 34075 [illegible]	+1. 11659 61779 32656
14	16. 13268 51569 15771	-1. 13073 23104 93188
15	16. 90563 39974 29943	+1. 14403 66732 73553
16	17. 66130 01556 97057	-1. 15660 98491 16566
17	18. 40113 [illegible]	+1. 16853 47844 87525
18	19. 12638 [illegible]	1. 17988 07298 70146
19	19. 83812 [illegible]	+1. 19070 61311 58776
20	20. 53735 [illegible]	-1. 20106 07915 19823
21	21. 22482 [illegible]	+1. 21098 75148 68287
22	21. 90136 [illegible]	-1. [illegible] 33738 97260
23	22. 56761 [illegible]	+1. [illegible] 67015 09681
24	23. [illegible]	1. [illegible] 75753 29632
25	23. [illegible]	1. [illegible] 99452 59407
26	24. 51039 [illegible]	+1. [illegible] 91404 75735
27	25. [illegible]	-1. [illegible] 32827 50799
28	25. [illegible]	1. [illegible] 61262 18604
29	26. [illegible]	+1. [illegible] 76388 24258
30	26. [illegible]	1. [illegible] 42371 22704
31	27. 58838 [illegible]	+1. 29302 89934 49056
32	28. [illegible]	1. 29994 37525 11048
33	28. 77300 [illegible]	+1. 30667 93729 32094
34	29. 35475 [illegible]	-1. 31321 57491 89648
35	29. 93176 [illegible]	+1. 31965 19603 77514
36	30. 50326 [illegible]	1. 32590 63598 38441
37	31. 06946 [illegible]	+1. 33201 66426 47702
38	31. 63055 [illegible]	-1. 33798 99181 42291
39	32. 18679 [illegible]	+1. 34385 27675 48983
40	32. 73805 [illegible]	1. 34965 12971 47445
41	33. 28488 [illegible]	+1. 35515 11807 15907
42	33. 82721 [illegible]	1. 36063 77026 40532
43	34. 36523 [illegible]	+1. 36601 57919 26784
44	34. 89907 [illegible]	-1. 37129 00540 34239
45	35. [illegible]	+1. 37646 47989 60084
46	35. 95471 [illegible]	-1. 38154 40663 17105
47	36. 47674 [illegible]	+1. 38653 16477 85955
48	36. 99507 [illegible]	-1. 39143 11072 66471
49	37. 50979 [illegible]	+1. 39624 57990 06725
50	38. 02100 [illegible]	-1. 40097 88839 49769
51	38. 52880 [illegible]	+1. 40563 33445 05322
52	39. 03328 [illegible]	-1. 41021 19979 25998
53	39. 53451 [illegible]	+1. 41471 75084 44110
54	40. 03259 [illegible]	-1. 41915 23983 05068
55	40. 52759 [illegible]	+1. 42[illegible] 90578 16189
56	41. 01959 08723 32490	-1. 42781 97545 15052

Table 4

ROOTS AND TURNING VALUES OF $Ai'(-\beta)$

s	β_s	$Ai(-\beta_s)$
1	1. 01879 29716 47471	+0. 53565 66560 15700
2	3. 24810 75821 79837	-0. 41901 54780 32564
3	4. 82009 92111 78736	+0. 38040 64686 28153
4	6. 16330 73556 39487	-0. 35790 79437 12292
5	7. 37217 72550 47770	+0. 34230 12444 11624
6	8. 48848 67340 19722	-0. 33047 62291 47967
7	9. 53544 90524 33547	+0. 32102 22881 94716
8	10. 52766 03969 57407	-0. 31318 53909 78682
9	11. 47505 66334 80245	+0. 30651 72938 82777
10	12. 38478 83718 45747	-0. 30073 08293 22645
11	13. 26221 89616 65210	+0. 29563 14810 01913
12	14. 11150 19704 62995	-0. 29108 16772 03539
13	14. 93593 71967 20517	+0. 28698 07069 99202
14	15. 73820 13736 92538	-0. 28325 27361 25021
15	16. 52050 38254 33794	+0. 27983 93053 60411
16	17. 28469 50502 16437	-0. 27669 44450 68930
17	18. 03234 46225 04393	+0. 27378 13856 46685
18	18. 76479 84376 65955	0. 27107 02785 76971
19	19. 48322 16565 67231	+0. 26853 65782 82176
20	20. 18863 15094 63373	-0. 26615 98682 15709
21	20. 88192 27555 16738	+0. 26392 29929 60829
22	21. 56388 77231 98975	-0. 26181 14056 94794
23	22. 23523 22853 48913	+0. 25981 26701 51466
24	22. 89658 87388 74619	-0. 25791 60753 32572
25	23. 54852 62959 28802	+0. 25611 23337 79654
26	24. 19155 97095 26354	-0. 25439 33426 46825
27	24. 82615 64259 21155	+0. 25275 19925 76574
28	25. 45274 25617 77650	-0. 25118 20133 88409
29	26. 07170 79351 73912	+0. 24967 78484 21125
30	26. 68341 03283 22450	-0. 24823 45513 98365
31	27. 28817 91215 23985	+0. 24684 77011 60296
32	27. 88631 84087 68461	-0. 24551 33306 87119
33	28. 47810 96831 02278	+0. 24422 78676 45060
34	29. 06381 41626 38199	-0. 24298 80842 90143
35	29. 64367 48146 32016	+0. 24179 10550 23721
36	30. 21791 81244 68575	-0. 24063 41202 44844
37	30. 78675 56480 12503	+0. 23951 48554 15564
38	31. 35038 53790 83035	-0. 23843 10444 66267
39	31. 90899 29584 30463	+0. 23738 06568 33468
40	32. 46275 27462 38480	-0. 23636 18275 53143
41	33. 01182 87766 34287	+0. 23537 28399 36488
42	33. 55637 56097 89422	-0. 23441 21104 38024
43	34. 09653 90948 09138	+0. 23347 81753 92842
44	34. 63245 70546 35866	-0. 23256 96793 53833
45	35. 16425 99025 53408	+0. 23168 53648 03788
46	35. 69207 11985 10469	-0. 23082 40630 53232
47	36. 21600 81523 35199	+0. 22998 46861 64426
48	36. 73618 20799 46803	-0. 22916 62197 66428
49	37. 25269 88178 54148	+0. 22836 77166 46281
50	37. 76565 91005 38871	-0. 22758 82910 18357
51	38. 27515 89047 30879	+0. 22682 71133 87800
52	38. 78128 97640 80369	-0. 22608 34059 36628
53	39. 28413 90572 98596	+0. 22535 64383 68475
54	39. 78379 02724 68233	-0. 22464 55241 61432
55	40. 28032 32499 03719	+0. 22395 00171 79277
56	40. 77381 44056 64866	-0. 22326 93086 02652

In Fig. 11 we depict the behavior of Ai(x) and Bi(x) for real values of x . The envelope curve is $\pm$ F(x). Vertical lines are drawn through the zeros of both Ai(x) and Bi(x) in order to illustrate the property that a zero of one of these functions coincides with an extreme value (maxima or minima) of the other function. In the inset we give a small table of values of α_s and $Ai'(-\alpha_s)$. From the Wronskian relation

$$Ai(x)\, Bi'(x) - Ai'(x)\, Bi(x) = 1/\pi \tag{4.56}$$

we find that

$$Bi(-\alpha_s) = -\frac{1}{\pi Ai'(-\alpha_s)}$$

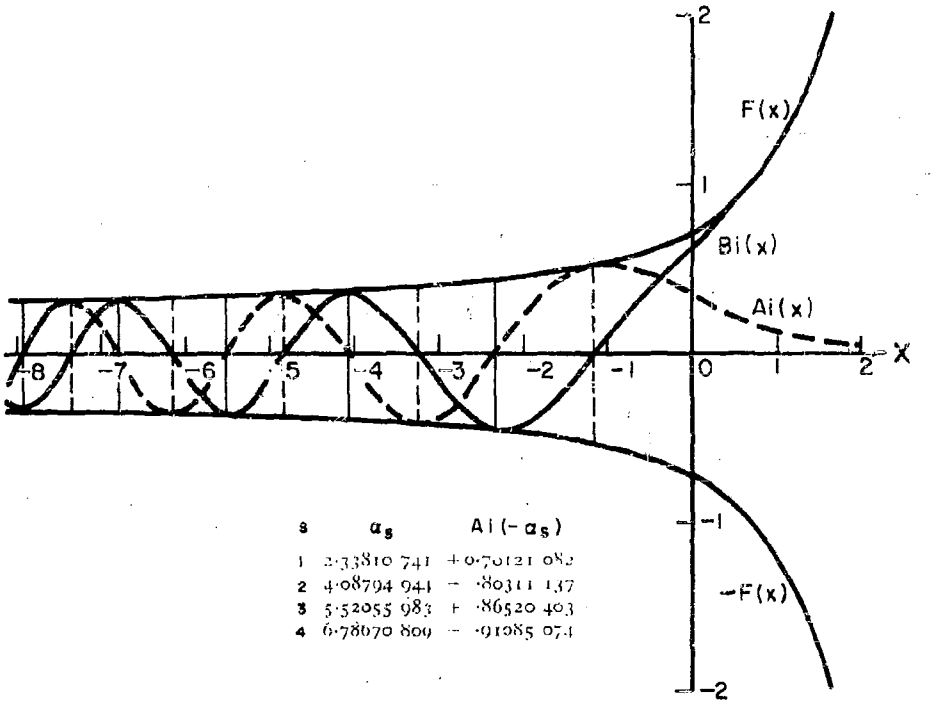

Fig. 11 The Airy Integrals Ai(x) and Bi(x)

A similar illustration for $Ai'(x)$ and $Bi'(x)$ is given in Fig. 12. The inset lists values of β_s and $Ai(-\beta_s)$. In this case we have

$$Bi'(-\alpha_s) = \frac{1}{\pi\, Ai(-\beta_s)}$$

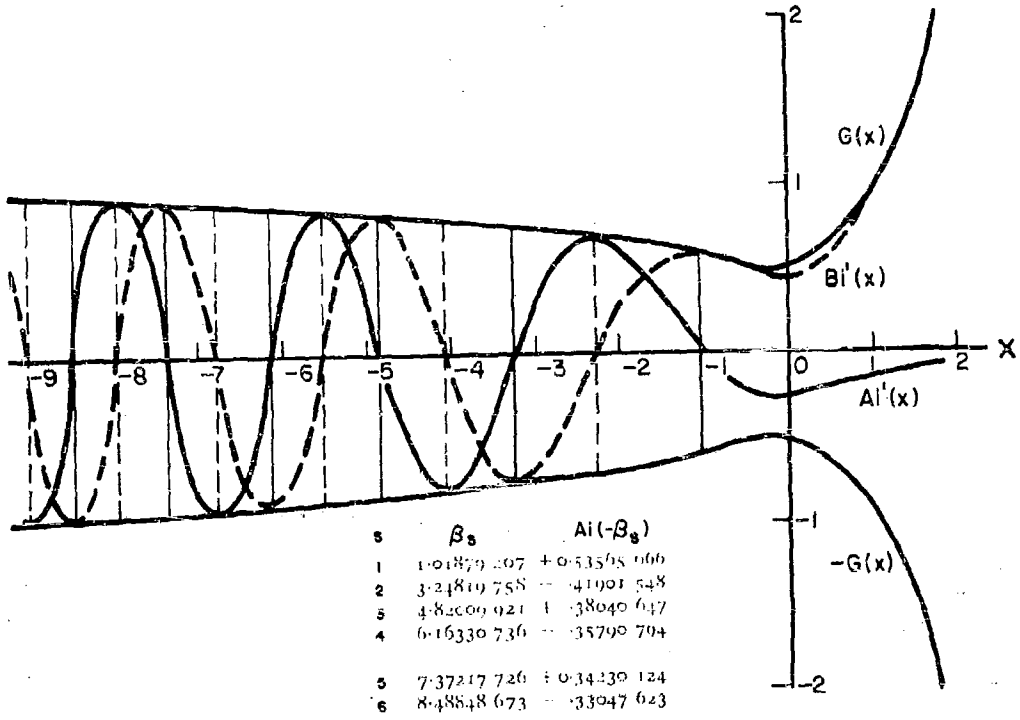

Fig. 12 The Airy Integrals $Ai'(x)$ and $Bi'(x)$

Section 5

NOTATION FOR ASYMPTOTIC ESTIMATES FOR THE BESSEL FUNCTIONS IN THE TRANSITION REGION

For half a century, progress in diffraction theory has been seriously hampered by the fact that research workers have failed to use a consistent and standarized notation for the asymptotic estimates for the Bessel functions in the so-called transition region. This confusion is in large measure due to the fact that applied mathematicians and physicists have failed to recognize the importance of adopting a universally acceptable notation for the solutions of Airy's differential equation

$$\frac{d^2y}{dx^2} + \alpha x y = 0 \quad , \quad \alpha = \text{constant}$$

Although this equation is considerably simpler than Bessel's differential equation

$$\frac{d^2 Z_\nu(kx)}{dx^2} + \frac{1}{x}\frac{d Z_\nu(kx)}{dx} + \left(k^2 - \frac{\nu^2}{x^2}\right) Z_\nu(kx) = 0$$

it is a curious fact that most authors choose to express the solutions of Airy's equation in the form

$$y(x) = x^{1/2}\left\{a\, J_{1/3}\left(\frac{2}{3}\sqrt{\alpha}\, x^{3/2}\right) + b\, J_{-1/3}\left(\frac{2}{3}\sqrt{\alpha}\, x^{3/2}\right)\right\}$$

or

$$y(x) = x^{1/2}\left\{c\, H^{(1)}_{1/3}\left(\frac{2}{3}\sqrt{\alpha}\, x^{3/2}\right) + d\, H^{(2)}_{1/3}\left(\frac{2}{3}\sqrt{\alpha}\, x^{3/2}\right)\right\}$$

where a and b (or c and d) are constants.

For negative values of α , one frequently finds results of the form

$$y(x) = x^{1/2} \left\{ e\, I_{1/3}\left(\frac{2}{3}\sqrt{-\alpha}\; x^{3/2}\right) + f\, I_{-1/3}\left(\frac{2}{3}\sqrt{-\alpha}\; x^{3/2}\right) \right\}$$

or

$$y(x) = x^{1/2} \left\{ g\, I_{1/3}\left(\frac{2}{3}\sqrt{-\alpha}\; x^{3/2}\right) + h\, K_{1/3}\left(\frac{2}{3}\sqrt{-\alpha}\; x^{3/2}\right) \right\}$$

where e and f (or g and h) are constants, and $I_{\pm 1/3}(z)$, $K_{1/3}(z)$ denotes the modified Bessel functions.

The form of Airy's equation which has been implied in most of the studies in diffraction theory has been

$$\frac{d^2y}{dx^2} = 2xy \tag{5.1}$$

and the solutions employed have been of the form

$$y(x) = \sqrt{x} \left\{ c\, H^{(1)}_{1/3}\left[\frac{1}{3}(-2x)^{3/2}\right] + d\, H^{(2)}_{1/3}\left[\frac{1}{3}(-2x)^{3/2}\right] \right\} \tag{5.2}$$

The form

$$\frac{d^2y}{dx^2} = \pm \frac{1}{3}\, xy \tag{5.3}$$

has often been used by mathematicians. The forms

$$\frac{d^2y}{dx^2} = 9xy \tag{5.4}$$

and

$$\frac{d^2y}{dx^2} + \frac{\pi^2}{12}\, xy = 0 \tag{5.5}$$

have also been used.

These Bessel functions of order $\pm 1/3$ are introduced in diffraction theory when the Bessel functions $J_n(x)$ and $H_n^{(1,2)}(x)$ are approximated by

$$J_n(x) \approx \frac{1}{3} \frac{\sqrt{-2\tau}}{x^{1/3}} \left\{ J_{1/3}\left[\frac{1}{3}(-2\tau)^{3/2} \right] + J_{-1/3}\left[\frac{1}{3}(-2\tau)^{3/2} \right] \right\} \tag{5.6}$$

$$H_n^{(1,2)}(x) \approx \frac{\exp(\pm i\,\pi/6)}{\sqrt{3}} \frac{\sqrt{-2\tau}}{x^{1/3}} H_{1/3}^{(1,2)}\left[\frac{1}{3}(-2\tau)^{3/2} \right] \tag{5.7}$$

$$\tau = x^{-1/3}(n - x)$$

when $x >> 1$ and $|x - \nu| = O(x^{1/3})$. This approximation is generally attributed to Nicholson and/or Watson. It was extensively used by van der Pol and Bremmer in the late 1930's and appears frequently in recent studies. It is generally called the Hankel approximation. It was first used by Lorenz in 1890.

Since $H_{1/3}^{(1,2)}(z)$ is a multi-valued function of z, and $z = 1/3\,(-2\tau)^{3/2}$ is a multi-valued function of τ, the use of this approximation requires a thorough knowledge of the theory of complex variables (branch cuts, Riemann surfaces, circuit relations, etc.). The functions $\sqrt[3]{z}\, J_{1/3}(z)$, $\sqrt[3]{z}\, H_{1/3}^{(1,2)}(z)$ are, however, entire functions of z and, therefore, are much easier to use. During the early 1940's at least three research groups recognized the advantage of replacing the multi-valued Bessel and Hankel functions of order $\pm 1/3$ by such an entire function. The first group to do this was an English research team, headed by M. H. L. Pryce (Ref. 10), who as early as 1941 recognized the desirability of using Jeffrey's (Ref. 18) form of the Airy integrals

$$Ai(x) = \frac{1}{\pi} \int_0^\infty \cos\left(\frac{t^3}{3} + xt \right) dt \tag{5.8}$$

$$Bi(x) = \frac{1}{\pi} \int_0^\infty \left[\sin\left(\frac{t^3}{3} + xt \right) + \exp\left(-\frac{t^3}{3} + xt \right) \right] dt \tag{5.9}$$

which are solutions of

$$\frac{d^2y(x)}{dx^2} = xy(x) \qquad \text{or} \qquad \frac{d^2y(x)}{dx^2} - xy(x) = 0 \qquad (5.10)$$

Let

$$\xi = \frac{2}{3} x^{3/2}$$

then we can show that the Airy integrals have the properties:

$$Ai(x) = \frac{\sqrt{x}}{3}\left[I_{-1/3}(\xi) - I_{1/3}(\xi) \right] \quad ; \quad Bi(x) = \left(\frac{x}{3}\right)^{1/2}\left[I_{-1/3}(\xi) + I_{1/3}(\xi) \right]$$

$$Bi(x) \pm i\,Ai(x) = \frac{2\sqrt{x}}{3} \exp(\pm i\,\pi/6)\left[I_{-1/3}(\xi) + \exp(\mp i\,\pi/3)\, I_{1/3}(\xi) \right]$$

$$Ai'(x) = \frac{x}{3}\left[I_{2/3}(\xi) - I_{-2/3}(\xi) \right] \quad ; \quad Bi'(x) = \frac{x}{\sqrt{3}}\left[I_{2/3}(\xi) + I_{-2/3}(\xi) \right]$$

$$Bi'(x) \pm i\,Ai(x) = \frac{2x}{3} \exp(\mp i\,\pi/6)\left[I_{-2/3}(\xi) + \exp(\mp i\,\pi/3)\, I_{2/3}(\xi) \right]$$

$$Ai(-x) = \frac{\sqrt{x}}{3}\left[J_{-1/3}(\xi) + J_{1/3}(\xi) \right] \quad ; \quad Bi(-x) = \left(\frac{x}{3}\right)^{1/2}\left[J_{-1/3}(\xi) - J_{1/3}(\xi) \right]$$

$$Bi(-x) \pm i\,Ai(-x) = \frac{2\sqrt{x}}{3} \exp(\pm i\,\pi/6)\left[J_{-1/3}(\xi) - \exp(\mp i\,\pi/3)\, J_{1/3}(\xi) \right]$$

$$Ai'(-x) = \frac{x}{3}\left[J_{2/3}(\xi) - J_{-2/3}(\xi) \right] \quad ; \quad Bi'(-x) = \frac{x}{\sqrt{3}}\left[J_{2/3}(\xi) + J_{-2/3}(\xi) \right]$$

$$Bi'(-x) \pm i\,Ai(-x) = \frac{2x}{3} \exp(\mp i\,\pi/6)\left[J_{-2/3}(\xi) + \exp(\pm i\,\pi/3)\, J_{2/3}(\xi) \right]$$

$$Ai(x) = \frac{1}{\pi}\left(\frac{x}{3}\right)^{1/2} K_{1/3}(\xi) \qquad Ai'(x) = -\frac{x}{\pi}\frac{1}{\sqrt{3}} K_{2/3}(\xi)$$

$$Ai(-x) = \frac{\sqrt{x}}{2\sqrt{3}}\left[\exp(i\,\pi/6)\ H^{(1)}_{1/3}(\xi) + \exp(-i\ \pi/6)\ H^{(2)}_{1/3}(\xi)\right]$$

$$Ai'(-x) = \frac{x}{2\sqrt{3}}\left[\exp(-i\,\pi/6)\ H^{(1)}_{2/3}(\xi) + \exp(i\,\pi/6)\ H^{(2)}_{2/3}(\xi)\right]$$

$$Ai(x) = \frac{\sqrt{x}}{2\sqrt{3}}\exp(i\,\pi/6)\ H^{(1)}_{1/3}\left[\xi\exp(-i\pi)\right] = \frac{\sqrt{x}}{2\sqrt{3}}\exp(-i\,\pi/6)\ H^{(2)}_{1/3}\left[\xi\exp(i\pi)\right]$$

$$Ai'(x) = -\frac{x}{2\sqrt{3}}\exp(-i\ \pi/6)\ H^{(1)}_{2/3}\left[\xi\exp(-i\,\pi)\right] = -\frac{x}{2\sqrt{3}}\exp(i\,\pi/6)\ H^{(2)}_{2/3}\left[\xi\exp(i\pi)\right]$$

$$Bi(x) \pm i\,Ai(x) = 2\exp(\pm i\,\pi/6)\ Ai\left[\exp(\pm i\ 2\pi/3)\,x\right]$$

$$Bi'(x) \pm i\,Ai'(x) = -2\exp(\mp i\,\pi/6)\ Ai'\left[\exp(\pm i\ 2\pi/3)\,x\right]$$

$$Bi(-x) \pm i\,Ai(-x) = \sqrt{\frac{x}{3}}\ \exp(\pm i\ 2\pi/3)\ H^{(1,2)}_{1/3}(\xi)$$

$$Bi'(-x) \pm i\,Ai'(-x) = -\frac{x}{\sqrt{3}}\exp(\pm i\ \pi/3)\ H^{(1,2)}_{2/3}(\xi) = \frac{x}{3}\exp(\pm i\ 2\pi/3)\ H^{(1,2)}_{-2/3}(\xi)$$

In 1942, H. Jeffreys (Ref. 18) made the observation that "Bessel functions of order $\pm 1/3$, $\pm 2/3$ seem to have no application except to provide an inconvenient way of expressing..... the Airy integrals".

When Pryce simplified the van der Pol-Bremmer formula in 1941 he encountered the functions

$$f(\nu) = Bi(-\nu) - i\,Ai(-\nu) = 2\exp(-i\,\pi/6)\ Ai\left[\exp(i\ \pi/3)\ \nu\right]$$

$$g(\nu) = Ai(-\nu)$$

The group at the Radiation Laboratory at M.I.T. was in close liaison with Admiralty Signal Establishment (England) and followed Pryce in introducing the Airy integrals, but they employed the definitions

$$y_2(\nu) = \sqrt{\pi}\left\{Bi(-\nu) - i\,Ai(-\nu)\right\}$$

$$y_1(\nu) = -\sqrt{\pi}\left\{Bi(-\nu) + i\,Ai(-\nu)\right\}$$

Since these authors had access to the manuscript tables of Miller and Jeffreys (Ref. 16), these choices of notation made it possible to obtain numerical results.

The Admiralty Computing Service (Ref. 10) (employing the services of many distinguished consultants and research workers) computed values of $Ai\left[b_n + y\exp(i\,\pi/3)\right]$, where $Ai(b_n) - t\exp(-i\,5\pi/12)\,Ai'(b_n)$, for a range of real values of t and y, for the first five values of the roots b_n.

At the Radio Research Laboratory at Harvard University, Furry (Ref. 19) also recognized the value of replacing the Bessel functions of order $\pm 1/3$, $\pm 2/3$ by solutions of Airy's equation. He chose to work with the form

$$\frac{d^2h(x)}{dx^2} + xh(x) = 0$$

and by end of 1944 tables of

$$\left.\begin{aligned} h_j(x) &= \left(\frac{2}{3}\right)^{1/3} x^{1/2}\, H^{(j)}_{1/3}\left(\frac{2}{3}x^{3/2}\right) = \xi^{1/3}\, H^{(j)}_{1/3}(\xi) \\ \frac{dh_j(x)}{dx} &= \left(\frac{2}{3}\right)^{1/3} x\, H^{(j)}_{-2/3}\left(\frac{2}{3}x^{3/2}\right) = \left(\frac{3}{2}\right)^{1/3} \xi^{2/3}\, H^{(j)}_{-2/3}(\xi) \end{aligned}\right\} \quad j = 1, 2 \tag{5.11}$$

had been tabulated to eight decimal places at the points of a square lattice of spacing 0.1 for $|x| \leq 6$. These tables were published in the fall of 1945 under the title <u>Tables of the Modified Hankel Functions of Order One-Third and Their Derivatives.</u>

It is easily seen that

$$h_1(x) = k\left[\, Ai(-x) - i\,Bi(-x) \,\right] \tag{5.12}$$

$$h_2(x) = k^*\left[\, Ai(-x) + i\,Bi(-x) \,\right] \tag{5.13}$$

$$h_1'(x) = -k\left[\, Ai'(-x) - i\,Bi'(-x) \,\right] \tag{5.14}$$

$$h_2'(x) = -k^*\left[\, Ai'(-x) + i\,Bi'(-x) \,\right] \tag{5.15}$$

where

$$k = (12)^{1/6}\exp(-i\,\pi/6)$$
$$k^* = (12)^{1/6}\exp(i\,\pi/6)$$

The Wave Propagation Group at Columbia University was also engaged in diffraction studies at the close of World War II. In the work of Pekeris (Ref. 20), the Bessel functions of order $\pm 1/3$, $\pm 2/3$ were retained. In the reports from this group one finds such expressions as

$$U(x) = I_{1/3}(x) + \exp(-i\,\pi/3)\; I_{-1/3}(x) \tag{5.16}$$

$$V(x) = I_{2/3}(x) + \exp(i\,\pi/3)\; I_{-2/3}(x) \tag{5.17}$$

$$P(v) = v^{1/2}\left[\, J_{1/3}(x) + J_{-1/3}(x) \,\right], \quad x = \frac{2}{3}\, v^{3/2} \tag{5.18}$$

The use by Pekeris of these forms was undoubtedly influenced by the fact that the Mathematical Tables Project (Ref. 21) at Columbia University was in the process of tabulating the tables of $J_{\pm 1/3}$, $J_{\pm 2/3}$, $J_{\pm 1/4}$, $J_{\pm 3/4}$, $I_{\pm 1/3}$, $I_{\pm 2/3}$, $I_{\pm 1/4}$, $I_{\pm 3/4}$, which were later published in 1948-1949 in two volumes under the title Tables of Bessel Functions of Fractional Order.

These tables are given to either ten significant figures (or ten decimals if the magnitude exceeds unity) and constitute the most accurate tables available today (1959) for the evaluation of the Airy integrals. However, they are not generally as easy to employ as Miller's classic table which gives eight decimals.

The outstanding contribution of Pryce, Freehafer, and Furry, in employing the Airy integral in these diffraction problems, is not generally appreciated by contemporary research workers. This step is generally credited to the Soviet physicist V. A. Fock (Ref. 12) who has employed the solutions of

$$\frac{d^2y(x)}{dx} = xy(x)$$

which he denotes by

$$v(t) = \frac{1}{\sqrt{\pi}} \int_0^\infty \cos\left(\frac{x^3}{3} + tx\right) dx \tag{5.19}$$

$$u(t) = \frac{1}{\sqrt{\pi}} \int_0^\infty \left\{ \sin\left(\frac{x^3}{3} + tx\right) + \exp\left(-\frac{x^3}{3} + xt\right) \right\} dx \tag{5.20}$$

$$w_1(t) = u(t) + i\,v(t) = 2\exp(i\,\pi/6)\;v\left[\exp(i\,2\pi/3)\,t\right] \tag{5.21}$$

$$w_2(t) = u(t) - i\,v(t) = 2\exp(-i\,\pi/6)\;v\left[\exp(-i\,2\pi/3)\,t\right] \tag{5.22}$$

In a monograph, Diffraction of Radio Waves Around the Earth's Surface, published in 1946, Fock gives tables of $u(t)$, $u'(t)$, $v(t)$, $v'(t)$ to four significant figures. We readily observe that in terms of Miller's functions:

$$v(t) = \sqrt{\pi}\,Ai(t) \quad , \quad u(t) = \sqrt{\pi}\,Bi(t)$$

$$w_1(t) = \sqrt{\pi}\left[Bi(t) + i\,Ai(t)\right] \quad , \quad w_2(t) = \sqrt{\pi}\left[Bi(t) - i\,Ai(t)\right] \tag{5.23}$$

and, in terms of Freehafer's functions:

$$w_1(t) = -y_1(t) \ , \quad w_2(t) = y_2(t)$$

The confusion attendant to the existence of these numerous notations has been further enhanced by the fact that Keller (Ref. 22) and his collaborators at New York University and Franz (Ref. 23) and his collaborators at Munster University (Germany) have taken the standard form of Airy's integral to be

$$A(q) = \frac{1}{2} \int_{-\infty}^{\infty} \exp\left[-i(\tau^3 - q\tau)\right] d\tau \tag{5.24}$$

so that

$$\frac{d^2 A(q)}{dq^2} + \frac{q}{3} A(q) = 0$$

They have not made use of the fact that

$$A(q) = \frac{\pi}{\sqrt[3]{3}} \, Ai\left(-\frac{1}{\sqrt[3]{3}} q\right) \tag{5.25}$$

For example, Franz is apparently unaware of the fact that Miller has published values of α_s, $Ai'(-\alpha_s)$, β_s, $Ai(-\beta_s)$ and has computed the first five values of $\bar{q}_s$, $A'(\bar{q}_s)$, q_s, $A(q_s)$.

In Table 5 we reproduce these results by Franz.

Table 5

ROOTS AND TURNING VALUES FOR A(q), A'(q)

q_ℓ	$A(q_\ell)$	$\bar{q}_\ell$	$A'(\bar{q}_\ell)$
1.469354	1.16680	3.372134	-1.059053
4.684712	-0.91272	5.895843	1.212955
6.951786	0.82862	7.962025	-1.306735
8.889027	-0.77962	9.788127	1.375676
10.632519	0.74562	11.457423	-1.430780

It is easily seen that

$$\bar{q}_s = \sqrt[3]{3}\ \alpha_s \qquad A'(\bar{q}_s) = \frac{\pi}{\sqrt[3]{3}} Ai'(-\alpha_s)$$

$$q_s = \sqrt[3]{3}\ \beta_s \qquad A(q_s) = \frac{\pi}{\sqrt[3]{3}} Ai(-\beta_s) \tag{5.26}$$

and therefore the first fifty of these constants can be obtained to eight decimals from Miller's 1946 table.

Another outstanding set of values of Airy integrals has been tabulated by Cerrillo and Kautz (Ref. 24) who define the integral

$$A h_{1,3}(B) = \frac{1}{2\pi} \int_{-\infty}^{\infty} \exp\left[-i(\tau^3 - B\tau)\right] d\tau \tag{5.27}$$

which, except for the factor $(1/\pi)$ is identical with Franz's integral $A(B)$. These authors give values of $|A h_{1,3}(B)|$ and $\arg\left\{A h_{1,3}(B)\right\}$ for $|B| = 0(0.2)4$, $\beta = \arg\ \beta = 0(7.5°)180°$ with an accuracy of seven decimals. They also list the first twenty values of $\bar{q}_\ell$. It should also be mentioned that in a paper published in the Philosophical Magazine in 1946, Woodward and Woodward (Ref. 25) have given tables of the real and imaginary parts of $Ai(z)$, $Ai'(z)$, $Bi(z)$, $Bi'(z)$ for $z = x + iy$, $x = -2.4(0.2)2.4$, $y = -2.4(0.2)0$, to an accuracy of four decimals.

Some current research groups have ignored the simplification introduced in the notation by Pryce in 1941, and continue to write the diffraction formula in the form

$$F = \left[2\pi\alpha^{2/3}(k_1 a)^{1/3}\left(\frac{d}{a}\right)\right]^{1/2} \sum_{s=0}^{\infty} \frac{f_s(h_1) f_s(h_2)}{\left[2\tau_s - 1/\delta_e^2\right]} \exp\left\{i\left[(k_1 a)^{1/3} \tau_s \alpha^{2/3} \frac{d}{a} + \frac{\pi}{4}\right]\right\} \tag{5.28}$$

$$f_s(h_2) = \left[\frac{(k_1 a)^{2/3} \frac{2h_2}{a} \alpha^{1/3} - 2\tau_s}{-2\tau_s} \right]^{1/2} \frac{H^{(1)}_{1/3} \left\{ \frac{1}{3} \left[(k_1 a)^{2/3} \frac{2h_2 \alpha^{1/3}}{a} - 2\tau_s \right]^{3/2} \right\}}{H^{(1)}_{1/3} \left\{ \frac{1}{3} (-2\tau_s)^{3/2} \right\}} \tag{5.29}$$

$$\frac{\exp(-i\,\pi/3)\, H^{(1)}_{2/3} \left\{ \frac{1}{3} (-2\tau_s)^{3/2} \right\}}{H^{(1)}_{1/3} \left\{ \frac{1}{3} (-2\tau_s) \right\}^{3/2}} = -\frac{1}{\delta_e \sqrt{-2\tau_s}} \tag{5.30}$$

$$\delta_e = \frac{i\, k_2^2 / k_1^2}{(k_1 a)^{1/3} \sqrt{k_2^2/k_1^2 - 1}} \tag{5.31}$$

The roots $\tau_{s,o}$ and $\tau_{s,\infty}$ defined by

$$H^{(1)}_{2/3} \left\{ \frac{1}{3} (-2\tau_{s,\infty})^{3/2} \right\} = 0 \quad , \quad \delta_e = \infty \tag{5.32}$$

$$H^{(1)}_{1/3} \left\{ \frac{1}{3} (-2\tau_{s,o})^{3/2} \right\} = 0 \quad , \quad \delta_e = 0 \tag{5.33}$$

have the property that

$$\tau_{s,o} = \frac{1}{\sqrt[3]{2}} \alpha_{s+1} \exp(i\,\pi/3) \qquad \tau_{s,\infty} = \frac{1}{\sqrt[3]{2}} \beta_{s+1} \exp(i\,\pi/3) \tag{5.34}$$

where α_s and β_s denote Miller's roots. A recent (1956) research report (Ref. 26) lists the following results obtained from Miller's table by dividing α_{s+1}, β_{s+1} by $\sqrt[3]{2}$.

Table 6

TABLE OF BREMMER'S CONSTANTS $|\tau_s|$

s	$\lvert\tau_{s,o}\rvert$	$\lvert\tau_{s,\infty}\rvert$	s	$\lvert\tau_{s,o}\rvert$	$\lvert\tau_{s,\infty}\rvert$
0	1.85575708	0.808616516	25	19.45383898	19.20085366
1	3.24460762	2.57809613	26	19.95428298	19.70453341
2	4.38167124	3.82571528	27	20.44852842	20.20185516
3	5.38661378	4.89182029	28	20.93687144	20.69312830
4	6.30526301	5.85130097	29	21.41958427	21.17863681
5	7.16128272	6.73731638	30	21.89691791	21.65864212
6	7.96889165	7.56829093	31	22.36910440	22.13338559
7	8.73747153	8.35580960	32	22.83635881	22.60309063
8	9.47362183	9.10775848	33	23.29888096	23.06796458
9	10.18220685	9.82981304	34	23.75685692	23.52820029
10	10.86694205	10.52623016	35	24.21046034	23.98397750
11	11.53074627	11.20030653	36	24.65985356	24.43546415
12	12.17596542	11.85466121	37	25.10518866	24.88281736
13	12.80452070	12.49141870	38	25.54660838	25.32618449
14	13.41801060	13.11233258	39	25.98424688	25.76570393
15	14.01778319	13.71887155	40	26.41823048	26.20150586
16	14.60498862	14.31228141	41	26.84867830	26.63371297
17	15.18061824	14.89363039	42	27.27570281	27.06244101
18	15.74553413	15.46384328	43	27.69941041	27.48779937
19	16.30049193	16.02372745	44	28.11990179	27.90989158
20	16.84615869	16.57399308	45	28.53727244	28.32881568
21	17.38312698	17.11526902	46	28.95161299	28.74466471
22	17.91192624	17.64811556	47	29.36300957	29.15752704
23	18.43303197	18.17303452	48	29.77154409	29.56748664
24	18.94687327	18.69047771	49	30.17729458	29.97462349

In Table 6 we reproduce these tables for the convenience of adherents to Bremmer's notation. Although this is a simple step to carry out, it would have been unnecessary if the natural units proposed by Pryce (Ref. 10), and used by Freehafer (Ref. 8) in Vol. 13 of the Radiation Laboratory Series and by all current Soviet writers (Ref. 14), had been employed. These units have been defined in Section 1 to be

$$d_o = \left(\frac{2}{k_1 a}\right)^{1/3} a \ , \quad h_o = \left(\frac{k_1 a}{2}\right)^{1/3} \frac{1}{k_1} \tag{5.35}$$

We then write

$$d = \xi d_o, \qquad h_1 = \zeta_1 h_o, \qquad h_2 = \zeta_2 h_o \tag{5.36}$$

The normalized impedance is defined to be

$$q = i\left(\frac{ka}{2}\right)^{1/3} \frac{k_1^2}{k_2^2}\sqrt{(k_2^2/k_1^2) - 1} \tag{5.37}$$

The diffraction formula then takes the form of Pryce and Fock

$$\underbrace{F}_{\text{Bremmer}} = \sqrt{\pi\xi}\ \exp(i\ \pi/4)\sum_{s=1}^{\infty} \frac{f_s(\zeta_1)f_s(\zeta_2)}{t_s - q^2}\exp(i\xi t_s) = \underbrace{\frac{1}{2}\ V(\xi, \zeta_1, \zeta_2, q)}_{\text{Fock}} \tag{5.38}$$

$$f_s(\zeta) = \frac{Ai\left[-a_s + \zeta\ \exp(-i\ \pi/3)\right]}{Ai(-a_s)} = \frac{w_1(t_s - \zeta)}{w_1(t_s)} \tag{5.39}$$

$$Ai'(-a_s) + q\ \exp(i\ \pi/3)\ Ai(-a_s) = 0, \quad \text{or} \quad w_1'(t_s) - q\ w_1(t_s) = 0 \tag{5.40}$$

where

$$\underbrace{t_s}_{\text{Fock}} = a_s\ \exp(i\ \pi/3) = \underbrace{\sqrt[3]{2}\ \tau_{s-1}}_{\text{Bremmer}} \tag{5.41}$$

Section 6
HISTORY OF NOTATION FOR TRANSITION REGION FORMULAE

One modern writer has accepted Fock's normalization 'although the notation of van der Pol and Bremmer should have a historical priority.' It is a curious fact that the normalization of t_s used by Pryce, Freehafer, Furry, and Fock actually has the historical priority. Pryce is the only modern author who is apparently aware of the fact that in 1910 Poincaré (Ref. 27) had indicated for the special case $\zeta_1 = \zeta_2 = 0$ that the diffraction formula should be of the form

$$\sum_{s=1}^{\infty} R_s \exp(i t_s \xi) \tag{6.1}$$

where t_s denotes the roots of

$$F'\left[t_s \exp(i\ 4\pi/3)\right] = 0 \tag{6.2}$$

and

$$F(t) = \int_{-\infty}^{\infty} \exp\left(itx - i\frac{x^3}{3}\right)dx = 2\int_0^{\infty} \cos\left(\frac{x^3}{3} - tx\right)dx$$

$$= A_0\left(1 - \frac{t^3}{2\cdot 3} + \frac{t^6}{2\cdot 3\cdot 4\cdot 5} - \cdots\right) + A_1\left(t - \frac{t^4}{3\cdot 4} + \cdots\right) \tag{6.3}$$

$$A_0 = 3^{-1/6}\Gamma\left(\frac{1}{3}\right) \quad , \quad A_1 = 3^{1/6}\Gamma\left(\frac{2}{3}\right)$$

is a solution of Airy's differential equation

$$\frac{d^2F}{dt^2} + tF = 0 \tag{6.4}$$

Unfortunately, Poincaré did not determine R_s explicitly. The brilliant analysis of the problem given by Poincaré is marred by the fact that the significant results are hidden in the difficult style of writing.

Poincaré showed that

$$F(t) \quad , \quad \exp(i\,2\pi/3)\;F\left[t\exp(i\;2\pi/3)\right] \quad , \quad \exp(i\,4\pi/3)\;F\left[t\exp(i\,4\pi/3)\right] \tag{6.5}$$

were all solutions of Airy's differential equation. He showed that

$$F(t) \xrightarrow[t\to\infty]{} 2\sqrt{\pi}\,t^{-1/4}\cos\left(\frac{2}{3}t^{3/2}-\frac{\pi}{4}\right) \qquad , \qquad F(t) \xrightarrow[t\to-\infty]{} \sqrt{\pi}\,(-t)^{-1/4}\exp\left[-\frac{2}{3}(-t)^{3/2}\right]$$

Poincaré sought to evaluate the infinite series

$$\mu = -\frac{i}{4\pi\omega^2}\,\frac{1}{\rho^2 D^2}\sum_{n=1}^{\infty} n(n+1)(2n+1)\,\frac{\sqrt{\omega D}\,H^{(2)}_{n+1/2}(\omega D)}{\frac{d}{d(\omega\rho)}\left\{\sqrt{\omega\rho}\,H^{(2)}_{n+1/2}(\omega\rho)\right\}}\;P_n(\cos\theta)=\sum_{n=1}^{\infty} A_n P_n(\cos\theta) \tag{6.6}$$

for $\omega\rho \gg 1$ and $\omega D = \omega\rho$. He showed that for n in the vicinity of $\omega\rho$,

$$A_n = -\frac{i}{4\pi\omega^2\rho^4}\,n(n+1)(2n+1)\,\frac{\sqrt{\omega\rho}\,H^{(2)}_{n+1/2}(\omega\rho)}{\frac{d}{d(\omega\rho)}\left\{\sqrt{\omega\rho}\,H^{(2)}_{n+1/2}(\omega\rho)\right\}} \approx -(-1)^n\,\frac{i\exp(i\,2\pi/3)}{\sqrt[3]{2}\,\rho^2}(\omega\rho)^{-2/3}\,\frac{n^2}{\omega\rho}\,\frac{F\left[t\exp(i\,4\pi/3)\right]}{F'\left[t\exp(i\,4\pi/3)\right]} \tag{6.7}$$

where

$$t = \left(\frac{\omega\rho}{2}\right)^{2/3}\left(1-\frac{n^2}{\omega^2\rho^2}\right) \approx \left(\frac{2}{\omega\rho}\right)^{1/3}\left(\omega\rho - n\right) \tag{6.8}$$

The Legendre polynomial was replaced by the approximation

$$P_n(\cos\theta) \approx \sqrt{\frac{2}{\pi n \sin\theta}} \cos\left(n\theta + \frac{\theta}{2} - \frac{\pi}{4}\right) \tag{6.9}$$

The series was replaced by an integral which had poles when

$$n = \omega\rho - t_s \left(\frac{\omega\rho}{2}\right)^{1/3} \tag{6.10}$$

where t_s denotes the roots of

$$F'\left[t_s \exp(i\ 4\pi/3)\right] = 0$$

However, Poincaré did not evaluate t_s, nor did he complete the analysis to show that the residue of A_n at these poles was

$$\text{Res } A_n \approx (-1)^n \frac{\exp(i\,\pi/6)}{\rho^2} \left(\frac{\omega\rho}{2}\right)^{2/3} \frac{1}{t_s} \tag{6.11}$$

At the pole, the Legendre function can be approximated by

$$P_{n_s}(\cos\theta) \approx \frac{1}{2\sqrt{\pi \sin\theta}} \left(\frac{2}{\omega\rho}\right)^{1/2} \exp(-i\omega\rho\theta + i\,\pi/4) \exp(it_s\,\xi) \quad , \quad \xi = \left(\frac{\omega\rho}{2}\right)^{1/3} \theta \tag{6.12}$$

However, Poincaré did not complete the analysis to explicitly evaluate the coefficients R_s in the asymptotic result

$$\mu \xrightarrow[ka\to\infty]{} \sum_{s=1}^{\infty} R_s \exp(it_s\,\xi)$$

In fact, he did not go so far as to assert that

$$R_s = K/t_s$$

$$\sum_{s=1}^{\infty} R_s \exp(i t_s \xi) = K \sum_{s=1}^{\infty} \frac{1}{t_s} \exp(i \xi t_s) \tag{6.13}$$

where K does not depend on s. However, it is quite clear from Poincaré's paper that he was interested in methods and not in explicit results. Throughout this paper he makes frequent use of constants which are never explicitly evaluated. For example, he writes

$$\sqrt{x}\, J_n(x) \approx K_1 x^{1/6} F(t) \ , \quad H_n^{(2)}(x) \approx K_1' x^{1/6} F\left[t \exp(i\ 4\pi/3)\right]$$

$$t = \left(\frac{x}{2}\right)^{2/3} \left(1 - \frac{n^2}{x^2}\right) \simeq \left(\frac{2}{x}\right)^{1/3} (x - n) \tag{6.14}$$

but does not state the definition of K_1 and K_1'. However, since

$$\frac{d}{dx}\left\{\sqrt{x}\, H_n^{(2)}(x)\right\} \approx K_1' \sqrt[3]{2} \exp(i\ 4\pi/3)\ x^{-1/6}\ F'\left[t \exp(i\ 4\pi/3)\right]$$

the constant cancels out when using the quotient

$$\frac{\sqrt{x}\, H_n^{(2)}(x)}{\frac{d}{dx}\left\{\sqrt{x}\, H_n^{(2)}(x)\right\}} \sim \exp(-i\ 4\pi/3) \left(\frac{x}{2}\right)^{1/3} \frac{F\left[t \exp(i\ 4\pi/3)\right]}{F'\left[t \exp(i\ 4\pi/3)\right]} \tag{6.15}$$

This paper is made even more difficult to read because Poincaré generally suppressed the arguments of his functions and one has to follow the derivations very closely in order to know what arguments are implied. A number of unfortunate printing errors further complicates the reading of this paper. In spite of the objectionable

characteristics of the paper, it represents a very thorough study and the careful reader is fully aware that the brilliant analysis therein reflects the fact that this research study was made by one of the greatest of the mathematical physicists of the second half of the nineteenth century. In addition to these faults, Macdonald (Ref. 2), Love (Ref. 28), Watson (Ref. 3) and other contemporaries dismissed the paper as "lacking in rigour in some points of detail." Consequently, later writers, by failing to read the paper, missed several important points. The most significant result which escaped notice for thirty years is that concerning the three Airy functions

$$F(t) \quad , \quad F\left[t \exp(i\ 2\pi/3)\right] \quad , \quad F\left[t \exp(i\ 4\pi/3)\right]$$

If we observe that

$$\underbrace{F(t)}_{\text{Poincaré}} = 2\int_0^\infty \cos\left(\frac{1}{3}x^3 - xt\right)dx = \underbrace{2\pi\ Ai(-t)}_{\text{Miller-Jeffreys}} \tag{6.16}$$

the results given by Poincaré imply the properties

$$\begin{aligned}
Bi(x) + i\,Ai(x) &= 2\exp(i\ \pi/6)\,Ai\left[x\exp(i\ 2\pi/3)\right] \\
Bi(x) - i\,Ai(x) &= 2\exp(-i\ \pi/6)\,Ai\left[x\exp(-i\ 2\pi/3)\right] \\
Bi'(x) + i\,Ai'(x) &= -2\exp(-i\ \pi/6)\,Ai'\left[x\exp(i\ 2\pi/3)\right] \\
Bi'(x) - i\,Ai'(x) &= -2\exp(i\ \pi/6)\,Ai'\left[x\exp(-i\ 2\pi/3)\right]
\end{aligned} \tag{6.17}$$

which, for example, permit us to determine the roots of

$$Bi(x) - i\,Ai(x) = 2\exp(-i\ \pi/6)\,Ai\left[x\exp(-i\ 2\pi/3)\right]$$

in terms of the roots of $Ai(-\alpha) = 0$.

Many of the concepts developed by Poincare were arrived at independently by Nicholson (Ref. 1).

In a paper published in 1910-1911, Nicholson showed that, for $ka >> 1$, the infinite series

$$H_\phi = \frac{i \sin\theta}{a^2\sqrt{ka}} \sum_{n=1}^{\infty} m \frac{H_m^{(2)}(ka)}{\frac{d}{d(ka)}\left\{\sqrt{ka}\, H_m^{(2)}(ka)\right\}} \frac{dP_n(\cos\theta)}{d(\cos\theta)}, \quad m = n + \frac{1}{2} \tag{6.18}$$

could be approximated by the series

$$H_\phi = \frac{2}{a^2} \frac{\sqrt{2\pi}}{ka} \frac{1}{\sqrt{\sin\theta}} \sum_{s=1}^{\infty} \nu_s^{3/2} A_{\nu_s} \exp\left[-i(\nu_s\theta - \pi/4)\right] \tag{6.19}$$

where ν_s denotes the roots defined by

$$\frac{\partial}{\partial(ka)}\left\{\sqrt{ka}\, H_{\nu_s}^{(2)}(ka)\right\} = 0 \tag{6.20}$$

and A_{ν_s} denotes the residue

$$A_{\nu_s} = \frac{\sqrt{ka}\, H_{\nu_s}^{(2)} ka}{\frac{\partial^2}{\partial\nu_s\partial(ka)}\left\{\sqrt{ka}\, H_{\nu_s}^{(2)}(ka)\right\}} \tag{6.21}$$

In order to compute ν_s and A_{ν_s}, Nicholson wrote Lorenz's (Ref. 29) 1890 results

$$\sqrt{\frac{\pi x}{2}}\, H_{n+1/2}^{(1,2)}(x) = v_n(x) \pm i w_n(x) \tag{6.22}$$

$$v_n(x) \approx \frac{1}{\sqrt{3\pi}} \left(\frac{x}{6}\right)^{1/3} \int_0^\infty \frac{1}{u^{2/3}} \cos(\epsilon u^{1/3} + u)\,du \tag{6.23}$$

$$w_n(x) \approx \frac{1}{\sqrt{3\pi}} \left(\frac{x}{6}\right)^{1/3} \int_0^\infty \frac{1}{u^{2/3}} \left[-\sin(\epsilon u^{1/3} + u) + \exp(\epsilon u^{1/3} - u)\right] du \tag{6.24}$$

where

$$\epsilon = (6/x)^{1/3}(m - x), \qquad m = n + \frac{1}{2} \tag{6.25}$$

in the form

$$\nu = ka + \left(\frac{ka}{6}\right)^{1/3} \rho \tag{6.26}$$

$$H_{\nu}^{(2)}(ka) \approx \frac{1}{\pi}\left(\frac{6}{ka}\right)^{1/3} f(\rho) \tag{6.27}$$

$$f(\rho) - \int_0^\infty \cos(w^3 + \rho w)dw + i\int_0^\infty \sin(w^3 + \rho w)dw + i\int_0^\infty \exp(-w^3 + \rho w)dw \tag{6.28}$$

He then let ρ_s denote the roots of

$$\left.\frac{df(\rho)}{d\rho}\right|_{\rho=\rho_s} = 0 \tag{6.29}$$

and wrote

$$\nu_s = ka + \left(\frac{ka}{6}\right)^{1/3} \rho_s = ka - i(ka)^{1/3} \beta_s \tag{6.30}$$

and showed that for $r = a$

$$H_{\phi}\Big|_{r=a} \approx - k^2(ka)^{-5/6}\left(\frac{2\pi}{\sin\theta}\right)^{1/2} \sum_{s=1}^{\infty} \frac{1}{\beta_s} \exp\left[-ika\theta - (ka)^{1/3}\beta_s\theta + i\frac{3\pi}{4}\right] \tag{6.31}$$

Nicholson evaluated the first root and obtained

$$\begin{aligned} \nu_1 &= ka + (0.5192\, ka)^{1/3} \exp(-i\pi/3) \\ &= ka - i(ka)^{1/3}(0.696)(1 + i\frac{1}{\sqrt{3}}) \end{aligned} \tag{6.32}$$

or

$$\beta_1 = 0.696\,(1 + i\frac{1}{\sqrt{3}})$$

Nicholson knew that

$$f_1(\rho) = \int_0^\infty \cos(w^3 + \rho w)\, dw \tag{6.33}$$

was related to Airy's integral

$$W(\mu) = \int_0^\infty \cos \frac{1}{2}\pi (w^3 - \mu w) dw \tag{6.34}$$

introduced in 1838 by Airy (Ref. 30). In 1851, Stokes (Ref. 31) computed (to an accuracy of four decimals) the first fifty zeros of $W(\mu)$ and the first ten zeros of the derivative $W'(\mu)$. The first few of these were

$W(\mu) = 0$: $\mu = 2.4955,\quad 4.3631,\quad 5.8922,\quad 7.2436,\quad 8.4788, \ldots.$

$W'(\mu) = 0$: $\mu = 1.08(45),\quad 3.4669,\quad 5.1446,\quad 6.5782,\quad 7.8685, \ldots.$

With one exception (the first zero of the derivative, which should be 1.0874 not 1.0845), all Stokes' values were later found by Miller (Ref. 16) to be correct within a unit of the fourth decimal. We observe that

$$f_1(\rho) = \sqrt[3]{\pi/2}\; W\left[-(2/\pi)^{2/3} \rho \right] \tag{6.35}$$

Nicholson failed to observe that

$$f(\rho) = \int_0^\infty \cos(w^3 + \rho w) dw + i \int_0^\infty \sin(w^3 + \rho w) dw + i \int_0^\infty \exp(-w^3 + \rho w) dw$$

$$= 2 \exp(i\ \pi/3)\, f_1\left[\rho \exp(-i\ 2\pi/3) \right] \tag{6.36}$$

so that

$$f(\rho) = 2 \sqrt[3]{\pi/2}\ \exp(i\ \pi/3)\, W\left[(2/\pi)^{2/3} \rho \exp(i\ \pi/3) \right] \tag{6.37}$$

Therefore

$$f'(\rho) = \frac{df(\rho)}{d\rho} = 2 \sqrt[3]{2/\pi}\ \exp(i\ 2\pi/3)\, W'\left[(2/\pi)^{2/3} \rho \exp(i\ \pi/3) \right] \tag{6.38}$$

The roots sought by Nicholson are thus given by

$$\rho_s = (\pi/2)^{2/3} \mu_s \exp(-i \ \pi/3) \tag{6.39}$$

Nicholson's 1910 work resulted in

$$(\rho_1)^3 = 3.115 \ \exp(-i\pi)$$

which leads to $\mu_1 = 1.081$. This is further from the true value $\mu_1 = 1.0874$ than Stokes' (1851) incorrect value 1.0845. Nicholson did not seek ρ_s for $s > 1$.

It is a curious fact that the property

$$f(\rho) = 2 \exp(i \ \pi/3) \ f_1\left[\rho \exp(-i \ 2\pi/3)\right] = 2 \exp(i \ \pi/3) \ f_1\left[\rho \exp(i \ 4\pi/3)\right]$$

leads to

$$H_\nu^{(2)}(ka) \approx \frac{2}{\pi}\left(\frac{6}{ka}\right)^{1/3} \exp(i \ \pi/3) \ f_1\left[\rho \exp(i \ 4\pi/3)\right]$$

but

$$\begin{aligned} f_1(\rho) &= \frac{1}{2\sqrt[3]{3}} \ F\left(-\frac{\rho}{\sqrt[3]{3}}\right) = \sqrt[3]{\pi/2} \ W\left[-(2/\pi)^{2/3} \rho\right] \\ \underbrace{\rho}_{\text{Nicholson}} &= \underbrace{-\sqrt[3]{3} \ t}_{\text{Poincaré}} = \underbrace{-(\pi/2)^{2/3} \mu}_{\text{Stokes}} \end{aligned} \tag{6.40}$$

and hence Nicholson's form of this approximation turns out to be identical with Poincaré's form

$$H_\nu^{(2)}(ka) \approx \frac{\exp(i \ \pi/3)}{\pi} \left(\frac{2}{ka}\right)^{1/3} F\left[t \exp(i \ 4\pi/3)\right] \tag{6.41}$$

except that now the arbitrary constant has been evaluated.

Neither Nicholson nor Poincaré appear to have realized the role in their work of Stokes' values of the roots of $W(\mu)$ and $W'(\mu)$

In 1909, Macdonald (Ref. 32) studied this problem and used Lorenz's result in the form

$$H_\nu^{(2)}(x) \approx \frac{i}{\pi}\left(\frac{6}{x}\right)^{1/3} y(\mu)$$

$$y(\mu) = \int_0^\infty \exp(3\mu\,\zeta - \zeta^3)d\zeta + \exp\left(-i\,\frac{\pi}{3}\right)\int_0^\infty \exp\left[-3\mu\exp\left(-i\,\frac{\pi}{3}\,\zeta\right) - \zeta^3\right] d\zeta \quad , \quad \mu = \frac{1}{3}\left(\frac{6}{x}\right)^{1/3}(\nu - x)$$

(6.42)

However, by 1914, Macdonald (Ref. 2) had used the result

$$\frac{\sqrt{3}}{\pi(\sqrt{3}} \int_{-\infty}^{\infty} \exp\left[i\,3\left(\frac{x}{2}\right)^{2/3} s - i\,s^3\right] ds = \exp(i\,\pi/6)\, H_{1/3}^{(1)}\left[x\exp(-i\,\pi)\right]$$

$$= \exp(i\,\pi/6)\, H_{1/3}^{(1)}(x) + \exp(-i\,\pi/6)\, H_{1/3}^{(2)}(x)$$

(6.43)

to replace the Airy integrals by Bessel functions of order $\pm 1/3$, $\pm 2/3$. Thus, he wrote

$$H_\nu^{(2)}(x) \approx i\,2\,x^{-1/3}\,3^{-2/3}\,\zeta^{1/3}\left[\exp(-i\,\pi/6)\, I_{-1/3}(\zeta) + \exp(i\,\pi/6)\, I_{1/3}(\zeta)\right]$$

$$= 2\pi^{-1} x^{-1/3}\, 3^{-1/6}\, \zeta^{1/3}\, K_{1/3}\left[\zeta\exp(-i\,\pi)\right] \qquad (6.44)$$

where

$$\zeta = \frac{2}{3}\,t^{3/2} \quad , \quad t = \frac{2}{x}^{1/3}(\nu - x)$$

This change in notation resulted in Nicholson's 1910 result

$$H_\phi \approx -k^2(ka)^{-5/6}\left(\frac{2\pi}{\theta}\right)^{1/2}\exp(-ika\theta + i\,3\pi/4)\sum_{s=1}^{\infty}\frac{1}{\beta_s}\exp\left\{-(ka)^{1/3}\beta_s\theta\right\}$$

$$\beta_s = i\,\rho_s\,(1/\sqrt[3]{6}) \tag{6.45}$$

$$\left.\frac{df(\rho)}{d\rho}\right|_{\rho=\rho_s} = 0$$

$$f(\rho) = \int_0^\infty \cos(w^3 + \rho w)dw + i\int_0^\infty \sin(w^3 + \rho w)dw + i\int_0^\infty \exp(-w^3 + \rho w)dw$$

appearing in Macdonald's 1914 paper in the form

$$H_\phi \approx -i\,k^2(ka)^{-5/6}\,2\left(\frac{2\pi}{\theta}\right)^{1/2}\exp\left[-i(ka\theta - \pi/12)\right]\sum_{k=0}^{\infty}(3x_k)^{-2/3}$$

$$\exp\left\{-(ka)^{1/3}(3x_k)^{2/3}\theta(\sqrt{3} + i)/4\right\} \tag{6.46}$$

$$H^{(2)}_{2/3}\left[\exp(i\pi)\,x_k\right] = \left\{J_{2/3}(x_k) - J_{-2/3}(x_k)\right\}\left\{\exp\left(i\frac{5\pi}{6}\right)\Big/\sin\left(\frac{\pi}{3}\right)\right\} = 0$$

The roots β_s used by Nicholson are related to the roots x_s used by Macdonald through the relation

$$\beta_{s-1} = \frac{3}{\sqrt[3]{24}}\,x_s^{2/3}\exp(i\,\pi/6) \tag{6.47}$$

and the ρ_s have the property

$$\rho_{s-1} = 3(x_s/2)^{2/3}\exp(-i\,\pi/3) \tag{6.48}$$

In this paper, Macdonald (Ref. 2) computed the first three values of x_n with the result that

$$x_1 = 0.6854 \quad , \quad x_2 = 3.90 \quad , \quad x_3 = 7.05$$

The true value of x_1 is $x_1 = 0.685384$ and hence Macdonald's value of x_1 is correct. The next 9 roots could have been immediately written down correctly from Stokes' values of the zero. For example, the values

$$x_2 = 3.9028 \quad , \quad x_3 = 7.0549$$

follow from the second and third of Stokes' roots since

$$x_s = \pi(\mu_s/3)^{3/2} \tag{6.49}$$

It is a curious fact that from 1914 to 1941 every author writing on these diffraction problems employed these awkward, multivalued Bessel functions. This is undoubtedly due to the fact that a 1918 paper by Watson (Ref. 3) is generally taken as the basis for these diffraction studies. In this paper, Watson used the approximation

$$H_\nu^{(2)}(x) \approx \frac{w}{\sqrt{3}} \exp(-i\tfrac{\pi}{6}) \exp\left\{-i\,\nu(w - w^3/3 - \operatorname{arctg} w)\right\} H_{1/3}^{(2)}\left(\tfrac{1}{3}\nu w^3\right) \tag{6.50}$$

where

$$w = \sqrt{x^2/\nu^2 - 1} \quad , \quad -\frac{\pi}{2} \le \arg w < \frac{\pi}{2}$$

$$w - w^3/3 - \operatorname{arctg} w = -w^5/5 + O(w^7)$$

Since

$$H_{1/3}^{(2)}(\zeta) \xrightarrow[\zeta \to \infty]{} \sqrt{\frac{2}{\pi\zeta}} \exp\left(-i\zeta + i\,\frac{\pi}{12}\right)$$

it is convenient to write Watson's result in the form

$$H_{\nu}^{(2)}(x) \approx \sqrt{\frac{2}{\pi\sqrt{x^2-\nu^2}}}\ \exp\left[-ix(\sin\tau - \tau\cos\tau) + i\frac{\pi}{4}\right]\left\{\sqrt{\frac{\pi\zeta}{2}}\exp\left(i\zeta - i\frac{5\pi}{12}\right)H_{1/3}^{(2)}(\zeta)\right\} \tag{6.51}$$

where

$$\nu = x\cos\tau \quad , \quad \zeta = (x/3)(\sin^3\tau/\cos^2\tau) - \frac{\nu}{3}w^3$$

This form emphasizes the fact that Watson's form leads to the result

$$H_{\nu}^{(2)}(x) \approx \sqrt{\frac{2}{\pi\sqrt{x^2-\nu^2}}}\ \exp\left[-ix(\sin\tau - \tau\cos\tau) + i\frac{\pi}{4}\right] \tag{6.52}$$

when x is large and $-x \ll \nu \ll x$.

When ν is comparable with x (or more precisely when $|\nu - x| < x^{1/3}$), we can replace w by

$$w = \frac{\sqrt{x^2-\nu^2}}{\nu} = \frac{\sqrt{(x+\nu)(x-\nu)}}{\nu} \sim \sqrt{\frac{2}{x}}\sqrt{x-\nu} = \left(\frac{2}{x}\right)^{1/3}\left(-t\right)^{1/2}$$

where

$$\nu = x + \left(\frac{x}{2}\right)^{1/3} t$$

Also, under these conditions

$$\zeta = \frac{\nu}{3}w^3 \approx \frac{x}{3}\left[\left(\frac{2}{x}\right)^{1/3}\left(-t\right)^{1/2}\right]^3 = \frac{2}{3}\left(-t\right)^{3/2}$$

We can then replace the $\exp\left\{-i\nu(w - w^3/3 - \operatorname{arctg} w)\right\}$ by unity, and write

$$H_\nu^{(2)}(x) \approx \frac{\exp(-i\,\pi/6)}{\sqrt{3}} \left(\frac{2}{x}\right)^{1/3} \left(-t\right)^{1/2} H_{1/3}^{(2)}\left[\frac{2}{3}(-t)^{3/2}\right] \tag{6.53}$$

This form derived from Watson's result was employed in 1938 by van der Pol and Bremmer. However, they wrote

$$\nu = x + x^{1/3}\,\tau$$

and hence

$$H_\nu^{(2)}(x) \approx \frac{\exp(-i\,\pi/6)}{\sqrt{3}\;x^{1/3}} \left(-2\tau\right)^{1/2} H_{1/3}^{(2)}\left[\frac{1}{3}\left(-2\tau\right)^{3/2}\right] \tag{6.54}$$

Watson's restriction $-\pi/2 \leqslant \arg w < \pi/2$ permits us to write

$$\frac{\nu}{3}w^3 \approx \frac{2}{3}(-t)^{3/2} = \frac{2}{3}\,t^{3/2}\exp(-i\;3\pi/2) = \xi\,\exp(-i\;3\pi/2)\;, \quad \xi = \frac{2}{3}t^{3/2}$$

for real values of t. Then we have

$$H_\nu^{(2)}(x) \sim -i\,\frac{\exp(-i\,\pi/6)}{\sqrt{3}}\left(\frac{2}{x}\right)^{1/3}\sqrt{t}\;H_{1/3}^{(2)}\left[\xi\,\exp(-i\;3\pi/2)\right]$$

Since

$$\exp(-i\,\pi/6)\,H_{1/3}^{(2)}\left[\xi\,\exp(-i\;3\pi/2)\right] = \frac{2i}{\pi}\,K_{1/3}\left[\xi\,\exp(-i\pi)\right]$$

we have

$$H_\nu^{(2)}(x) \sim \frac{2}{\pi}\,\frac{2^{1/3}}{3^{1/2}x^{1/3}}\sqrt{t}\;K_{1/3}\left[\xi\,\exp(-i\pi)\right] = \frac{2}{\pi}\,x^{-1/3}\,3^{-1/6}\,\xi^{1/3}\,K_{1/3}\left[\xi\,\exp(-i\pi)\right]$$

This is precisely the form employed by Macdonald. We are therefore led to observe that the <u>more rigorous</u> (and more complex) approximation introduced by Watson is,

before making computations, reduced to the identical less rigorous form introduced in 1890 by Lorenz and employed by Poincaré and Nicholson.

The most remarkable fact is that during World War II (when first class physicists turned their attention from quantum and nuclear theory to classical wave propagation) one of the most significant advances was the replacing of Bessel functions of order $\pm 1/3$, $\pm 2/3$ by Airy integrals. We now see that this was merely a matter of going back to the notational concepts of the mathematical physicists Lorenz, Poincaré, and Nicholson. The remarkable results

$$\underbrace{w_2(t)}_{\text{Fock}} = \underbrace{y_2(-t)}_{\text{Freehafer}} = \sqrt{\pi}\underbrace{\left\{Bi(t) - i\,Ai(t)\right\}}_{\text{Miller}} = \underbrace{\sqrt{\pi}\,f(-t)}_{\text{Pryce}} = \underbrace{\frac{\sqrt{\pi}}{(12)^{1/6}}\exp(-i\ 2\pi/3)h_2(-t)}_{\text{Furry}}$$

$$= \underbrace{\frac{1}{\sqrt{\pi}}\exp(-i\pi/6)\,F\left[-t\exp(i\ 4\pi/3)\right]}_{\text{Poincaré}} \tag{6.55}$$

merely reflect the fact that these men chose to take

$$\frac{d^2y(t)}{dt^2} \pm t\,y(t) = 0$$

as standard form of Airy's differential equation. Therefore, we feel that the adoption of the notation of Fock has an historical precedent in the work of Poincaré and represents a natural choice since Pryce, Freehafer, and Furry independently chose a related form. The form used by Keller and Franz,

$$A(q) = \int_0^\infty \cos(\tau^3 - q\tau)d\tau, \qquad \frac{d^2A}{dq^2} + \frac{q}{3}A = 0 \tag{6.56}$$

has an historical precedent in Nicholson's

$$f_1(\rho) = \int_0^\infty \cos(\tau^3 + \rho\tau)d\tau = A(-\rho), \qquad \frac{d^2f_1}{d\rho^2} - \frac{\rho}{3}f_1 = 0 \tag{6.57}$$

and Lorenz's

$$Q(x) = \int_0^\infty \frac{1}{u^{2/3}} \cos(u - xu^{1/3})\, du = 3f_1(-x) = 3A(x) \quad , \quad \frac{d^2Q}{dx^2} + \frac{x}{3} Q = 0 \tag{6.58}$$

However, available tables and more general usage suggests that the notations of Fock and Miller should be employed.

Section 7
STANDARD NOTATION AND TERMINOLOGY FOR DIFFRACTION FUNCTIONS

In this paper, we use Fock's form of the van der Pol-Bremmer diffraction formula

$$\boxed{V(\xi, y_1, y_2, q) = \exp(-i\,\pi/4)\sqrt{\frac{\xi}{\pi}}\int_{-\infty}^{\infty}\exp(i\xi t)w_1(t-y_>)\left\{v(t-y_<) - \frac{v'(t) - q\,v(t)}{w_1'(t) - qw_1(t)}\,w_1(t-y_<)\right\}dt} \tag{7.1}$$

as the standard form for this function.

The case when both antennas are on the surface ($y_1 = y_2 = 0$) was considered as early as 1910 by Poincaré (Ref. 27) and Nicholson (Ref. 1) and later by Watson in 1918 (Ref. 3) and van der Pol in 1919 (Ref. 5). In recognition of Nicholson's contributions, the designation Nicholson integrals or Nicholson functions will be used for the integrals

$$\boxed{\begin{aligned} V_o(x, q) &= \frac{\exp(-i\,\pi/4)}{2}\sqrt{\frac{\xi}{\pi}}\int_{-\infty}^{\infty}\exp(i\xi t)\,\frac{w_1(t)}{w_1'(t) - q\,w_1(t)}\,dt \\ v(x) &= V_o(x, o) = \frac{\exp(-i\,\pi/4)}{2}\sqrt{\frac{\xi}{\pi}}\int_{-\infty}^{\infty}\exp(i\xi t)\,\frac{w_1(t)}{w_1'(t)}\,dt \\ u(x) &= \lim_{q\to\infty}\left[2i\xi\,q^2 V_o(x, q)\right] = \frac{\exp(-i\,3\pi/4)}{\sqrt{\pi}}\,\xi^{3/2}\int_{-\infty}^{\infty}\exp(i\xi t)\,\frac{w_1'(t)}{w_1(t)}\,dt \end{aligned}} \tag{7.2}$$

We observe that

$$\boxed{V(\xi, 0, 0, q) = 2\, V_o(\xi, q)} \tag{7.3}$$

and

$$\boxed{V(\xi, 0, 0, q) = 2\, v(\xi)} \tag{7.4}$$

If we write

$$V_o(\xi, q) = \frac{\exp(-i\,\pi/4)}{2} \sqrt{\frac{\xi}{\pi}} \left\{ -\frac{1}{q} \int_{-\infty}^{\infty} \exp(i\xi t) \frac{1}{1 - \frac{w_1'(t)}{q w_1(t)}}\, dt \right\} \tag{7.5}$$

$$= \frac{\exp(-i\,\pi/4)}{2} \sqrt{\frac{\xi}{\pi}} \left\{ -\frac{1}{q} \int_{-\infty}^{\infty} \exp(i\xi t) \left[1 + \frac{w_1'(t)}{q\, w_1(t)} + \ldots \right] dt \right\}$$

we observe that

$$V_o(\xi, q) \xrightarrow[q \to \infty]{} -\frac{\exp(-i\,\pi/4)}{q} \sqrt{\pi\xi}\, \delta(\xi) - \frac{\exp(-i\,\pi/4)}{2q^2} \sqrt{\frac{\xi}{\pi}} \int_{-\infty}^{\infty} \exp(i\xi t) \frac{w_1'(t)}{w_1(t)}\, dt + \ldots$$

$$= -\frac{\exp(-i\,\pi/4)}{q} \sqrt{\pi\xi}\, \delta(\xi) - \frac{i}{2q^2 \xi}\, u(\xi) + \ldots \tag{7.6}$$

Therefore, if $\xi \neq 0$,

$$V_o(\xi, q) \xrightarrow[q \to \infty]{} -\frac{i}{2q^2 \xi}\, u(\xi) \tag{7.7}$$

and

$$\boxed{V(\xi, 0, 0, q) \xrightarrow[\substack{\xi \neq 0 \\ q \to \infty}]{} -\frac{i}{q^2 \xi}\, u(\xi)} \tag{7.8}$$

The designation Fock integrals or Fock functions will be employed for the integrals

$$\boxed{\begin{aligned} V_1(x, q) &= \frac{1}{\sqrt{\pi}} \int_{-\infty}^{\infty} \frac{\exp(ixt)}{w_1'(t) - q\, w_1(t)}\, dt \\ g(x) &= V_1(x, 0) = \frac{1}{\sqrt{\pi}} \int_{-\infty}^{\infty} \frac{\exp(ixt)}{w_1'(t)}\, dt \\ f(x) &= \lim_{q \to \infty} \left[- q\, V_1(x, q) \right] = \frac{1}{\sqrt{\pi}} \int_{-\infty}^{\infty} \frac{\exp(ixt)}{w_1(t)}\, dt \end{aligned}} \tag{7.9}$$

The Fock integral $V_1(x, q)$ is obtained as the special form of $V(x, y_1, y_2, q)$ when one of the antennas is on the surface $(y_1 = 0)$ and the other antenna is raised to a great height $(y_2 \to \infty)$. Thus,

$$\boxed{V(\xi, 0, y_2, q) \xrightarrow[y_2 \to \infty]{} \exp\left(i\, \frac{2}{3}\, y_2^{3/2}\right) \sqrt[4]{\frac{\xi^2}{y_2}}\; V_1(x, q), \qquad x = \xi - \sqrt{y_2}} \tag{7.10}$$

The case in which both antennas are raised to great heights was first treated correctly in 1947 by C. L. Pekeris (Ref. 20). Therefore, the designation <u>Pekeris integrals</u> or <u>Pekeris functions</u> is used for the integrals

$$\boxed{\begin{aligned} V_2(x, q) &= - \frac{\exp(i\, \pi/4)}{\sqrt{\pi}} \int_{-\infty}^{\infty} \exp(ixt)\, \frac{v'(t) - q\, v(t)}{w_1'(t) - q\, w_1(t)}\, dt - \frac{\exp(i\, \pi/4)}{2\sqrt{\pi}\, x} \\ p(x) &= - \exp(-i\, \pi/4)\, V_2(x, \infty) = \frac{1}{\sqrt{\pi}} \int_{-\infty}^{\infty} \exp(ixt)\, \frac{v(t)}{w_1(t)}\, dt + \frac{1}{2\sqrt{\pi}\, x} \\ q(x) &= - \exp(-i\, \pi/4)\, V_2(x, 0) = \frac{1}{\sqrt{\pi}} \int_{-\infty}^{\infty} \exp(ixt)\, \frac{v'(t)}{w_1'(t)}\, dt + \frac{1}{2\sqrt{\pi}\, x} \end{aligned}} \tag{7.11}$$

We can show that

$$V(\xi, y_1, y_2, q) \xrightarrow[\substack{y_1 \to \infty \\ y_2 \to \infty}]{} F(\xi, y_1, y_2) + 4\sqrt{\frac{\xi^2}{y_1 y_2}} \exp\left[i \frac{2}{3} \left(y_1^{3/2} + y_2^{3/2} \right) \right] V_2(x, q) \tag{7.12}$$

$$x = \xi - \sqrt{y_1} - \sqrt{y_2}$$

where $F(\xi, y_1, y_2)$ is the "knife edge" diffraction field

$$F(\xi, y_1, y_2) = \begin{cases} \exp\left\{ i \left[-\frac{\xi^3}{12} + \frac{\xi}{2}(y_2 + y_1) + \frac{(y_1 - y_2)^2}{4\xi} \right] \right\} - 4\sqrt{\frac{\xi^2}{y_1 y_2}} \exp\left[i \frac{2}{3} \left(y_1^{3/2} + y_2^{3/2} \right) \right] \\ \left[\exp\left(-i\tau^2 - i\frac{\pi}{4} \right) \frac{\mu}{\sqrt{\pi}} \int_{-\tau}^{\infty} \exp\left(is^2 \right) ds \right], \quad x < 0 \\ 4\sqrt{\frac{\xi^2}{y_1 y_2}} \exp\left[i \frac{2}{3} \left(y_1^{3/2} + y_2^{3/2} \right) \right] \left[\exp\left(-i\tau^2 - i\frac{\pi}{4} \right) \frac{\mu}{\sqrt{\pi}} \int_{\tau}^{\infty} \exp\left(is^2 \right) ds \right], \\ \qquad x > 0 \end{cases} \tag{7.13}$$

where

$$\boxed{\tau = \mu x, \qquad \mu = \sqrt{\frac{\sqrt{y_1}\sqrt{y_2}}{\sqrt{y_1} + \sqrt{y_2}}}, \qquad x = \xi - \sqrt{y_1} - \sqrt{y_2}} \tag{7.14}$$

If we define the modified Fresnel integral

$$\boxed{K(\tau) = \exp\left(-i\,\tau^2 - i\,\frac{\pi}{4}\right)\,\frac{1}{\sqrt{\pi}}\int_{\tau}^{\infty}\exp\left(i s^2\right)\,ds} \qquad \boxed{K(0) = \frac{1}{2}} \tag{7.15}$$

we can write

$$\boxed{\begin{aligned}
&x < 0: \\
&V(\xi, y_1, y_2, q) \xrightarrow[\substack{y_1 \to \infty \\ y_2 \to \infty}]{} \exp\left\{i\left[-\frac{\xi^3}{12} + \frac{\xi}{2}(y_1 + y_2) + \frac{(y_1 - y_2)^2}{4\xi}\right]\right\} \\
&\qquad + \sqrt[4]{\frac{\xi^2}{y_1 y_2}}\,\exp\left[i\,\frac{2}{3}\left(y_1^{3/2} + y_2^{3/2}\right)\right]\left[-\mu K(-\tau) + V_2(x, q)\right] \\
&x > 0: \\
&V(\xi, y_1, y_2, q) \xrightarrow[\substack{y_1 \to \infty \\ y_2 \to \infty}]{} \sqrt[4]{\frac{\xi^2}{y_1 y_2}}\,\exp\left[i\,\frac{2}{3}\left(y_1^{3/2} + y_2^{3/2}\right)\right]\left[\mu K(\tau) + V_2(x, q)\right]
\end{aligned}} \tag{7.16}$$

For large values of τ,

$$K(\tau) \xrightarrow[\tau \to \infty]{} \frac{1}{2\sqrt{\pi}}\,\exp\left(i\,\frac{\pi}{4}\right)\left\{\frac{1}{\tau} - \frac{i}{2\tau^3} + \ldots\right\} \tag{7.17}$$

We observe that for $\tau \to -\infty$, i.e., $x \to -\infty$,

$$-\mu K(-\tau) + V_2(x, q) \xrightarrow[\tau \to -\infty]{} \hat{V}_2(x, q) \tag{7.18}$$

where

$$\boxed{\hat{V}_2(x, q) = -\frac{\exp(i\frac{\pi}{4})}{\sqrt{\pi}} \int_{-\infty}^{\infty} \exp(ixt) \frac{v'(t) - q\,v(t)}{w_1'(t) - q\,w_1(t)}\, dt} \tag{7.19}$$

Also, for $\tau \to \infty$, i.e., $x \to \infty$

$$\mu K(\tau) + V_2(x, q) \xrightarrow[\tau \to \infty]{} \hat{V}_2(x, q) \tag{7.20}$$

We designate as <u>Pekeris caret functions</u> the integrals $\hat{V}_2(x, q)$ and

$$\boxed{\begin{aligned} \hat{p}(x) &= -\exp\left(-i\frac{\pi}{4}\right) \hat{V}_2(x, \infty) = \frac{1}{\sqrt{\pi}} \int_{-\infty}^{\infty} \exp(ixt) \frac{v(t)}{w_1(t)}\, dt \\ \hat{q}(x) &= -\exp\left(-i\frac{\pi}{4}\right) \hat{V}_2(x, 0) = \frac{1}{\sqrt{\pi}} \int_{-\infty}^{\infty} \exp(ixt) \frac{v'(t)}{w_1'(t)}\, dt \end{aligned}} \tag{7.21}$$

Before proceeding let us make a few remarks in support of the notations introduced. Let us observe that when neither antenna is raised (i.e., the number of raised antennas is zero) that we have the function "V sub-<u>zero</u>", i.e., $V_o(x, q)$. When <u>one</u> antenna is raised we have the function "V sub-<u>one</u>," i.e., $V_1(x, q)$. When the <u>two</u> antennas are raised we have the function "V sub-<u>two</u>," i.e., $V_2(x, q)$.

The notation $V_1(x, q)$ is already in use in Soviet papers in this field. The notations $V_o(x, q)$ and $V_2(x, q)$ are new.

The function $V_2(x, q)$ is finite at $x = 0$ but $\hat{V}_2(x, q)$ has the behavior

$$\hat{V}_2(x, q) \xrightarrow[x \to 0]{} -\frac{\exp\left(i\frac{\pi}{4}\right)}{2\sqrt{\pi}\, x} \tag{7.22}$$

The caret has been chosen so as to emphasize singular nature of $\hat{V}_2(x, q)$. Since the magnitude of $\hat{V}_2(x, q)$ has a graph with a "spike" at the origin, we have introduced the caret to remind us of this behavior.

The normalizations of $u(\xi)$ and $v(\xi)$ have been chosen so as to yield the property

$$u(0) = v(0) = 1 \tag{7.23}$$

The normalizations of $\hat{p}(\xi)$ and $\hat{q}(\xi)$ have been chosen in such a manner that only the real part of these functions is singular. The choice of the factor $1/\sqrt{\pi}$ is dictated by the desire to omit a constant factor before $V_2(x, q)$ in the important combinations

$$\pm \mu K(\pm \tau) + V_2(x, q) \tag{7.24}$$

We will also use the nomenclature:

1. Attenuation function $V_0(x, q)$
2. Current distribution function $V_1(x, q)$
3. Reflection coefficient function $V_2(x, q)$

These names are suggested by the applications. The function $V_0(x, q)$ describes the attenuation of the ground wave at the ground due to a source located at zero height on a convex surface. The function $V_1(x, q)$ describes the current distribution (tangential magnetic field) induced on a convex surface by a plane wave. The function $V_2(x, q)$ describes the reflection of plane waves by a convex surface.

It would be highly desirable if all future work in this field were to be done using an $\exp(-i\omega t)$ time dependence since this has been adopted by Bremmer (Ref. 33) and Fock (Ref. 12) in their books and papers. Not only does the need to use complex conjugate functions complicate the applications, but it also can lead to some confusing situations. For example, Fock uses the function

$$g(x) = \frac{1}{\sqrt{\pi}} \int_{-\infty}^{\infty} \frac{\exp(ixt)}{w_1'(t)} \, dt \tag{7.25}$$

whereas Wait (Ref. 13) uses an integral

$$U(x) = \frac{1}{\sqrt{\pi}} \int_{-\infty}^{\infty} \frac{\exp(-ixt)}{W_1'(t)} \, dt \tag{7.26}$$

which can be identified as the complex conjugate of $g(x)$. However, Fock would write

$$\bar{g}(x) = \frac{1}{\sqrt{\pi}} \int_{-\infty}^{\infty} \frac{\exp(-ixt)}{w_2'(t)} \, dt$$

since

$$\underbrace{W_1(t)}_{\text{Wait}} = \underbrace{w_2(t)}_{\text{Fock}}$$

In previous sections, the various notations for the Airy functions are discussed in more detail. However, we take this opportunity to urge that the Fock and Jeffreys-Miller notations for the Airy integrals be universally adopted. The Fock notation is convenient for the purpose of derivations, but the best tables of the Airy integrals are those of Miller. However, after deriving results using Fock's $v(x)$, $w_1(x)$, $w_2(x)$, it is easy to obtain numerical results by noting that

$$\begin{aligned} v(x) &= \sqrt{\pi}\, Ai(x) = \sqrt{\pi}\; F(x) \sin \chi(x) \\ w_1(x) &= \sqrt{\pi} \left[Bi(x) + i\, Ai(x) \right] = \sqrt{\pi}\; F(x) \exp\left[i\chi(x) \right] \\ w_2(x) &= \sqrt{\pi} \left[Bi(x) - i\, Ai(x) \right] = \sqrt{\pi}\; F(x) \exp\left[-i\chi(x) \right] \end{aligned} \tag{7.27}$$

In using the residue series we need the roots $t_s(q)$ of

$$w_1'(t_s) - q\, w_1(t_s) = 0 \tag{7.28}$$

Fock uses the notation

$$w_1'(t_s') = 0 \tag{7.29}$$

$$w_1(t_s^o) = 0 \tag{7.30}$$

and Miller uses

$$Ai'(a_s') = 0 \tag{7.31}$$

$$Ai(a_s) = 0 \tag{7.32}$$

Therefore

$$t_s' = -\exp\left(i\,\frac{\pi}{3}\right) a_s' \tag{7.33}$$

$$\underbrace{t_s^o}_{\text{Fock}} = \underbrace{-\exp\left(i\,\frac{\pi}{3}\right) a_s}_{\text{Miller}} \tag{7.34}$$

It would be better to change this notation in the following manner: Let

$$\alpha_s = -a_s \tag{7.35}$$

$$\beta_s = -a_s' \tag{7.36}$$

The precedent already exists since α_s and β_s were defined in this way by Pryce and Domb (Ref. 10). We also propose to let $t_s(q)$ take on the limiting forms

$$t_s(\infty) = t_s^{\infty} = \alpha_s \exp\left(i\,\frac{\pi}{3}\right) \tag{7.37}$$

$$t_s(0) = t_s^o = \beta_s \exp\left(i\,\frac{\pi}{3}\right) \tag{7.38}$$

This notation can be confused with Fock's notation since

$$t_s(\infty) = \underbrace{t_s^o}_{\text{Fock}} = \underbrace{t_s^\infty}_{\text{This paper}} \tag{7.39}$$

$$t_s(o) = \underbrace{t_s'}_{\text{Fock}} = \underbrace{t_s^o}_{\text{This paper}} \tag{7.40}$$

However, the change is urged in order to let the superscripts indicate the limiting value of q instead of the boundary condition. This change has already been made by Wait who uses a result equivalent to

$$\underbrace{t_s^o}_{\text{Wait}} = \beta_s \exp\left(-i\frac{\pi}{3}\right) = \text{complex conjugate} \underbrace{\left[t_s^o \right]}_{\text{This paper}} \tag{7.41}$$

This is a good example of the reason why one time dependence should be used.

We should also remark that one should write Miller's values of $Ai'(a_s)$, $Ai(a_s')$ in the form

$$Ai'(a_s) = Ai'(-\alpha_s) \tag{7.42}$$

$$Ai(a_s') = Ai(-\beta_s) \tag{7.43}$$

Also

$$\underbrace{w_1'(t_s^\infty)}_{\text{This paper}} = \underbrace{w_1'(t_s^o)}_{\text{Fock}} = -2\sqrt{\pi}\exp\left(-i\frac{\pi}{6}\right) Ai'(-\alpha_s) \tag{7.44}$$

$$\underbrace{w_1(t_s^o)}_{\text{This paper}} = \underbrace{w_1(t_s')}_{\text{Fock}} = 2\sqrt{\pi}\exp\left(i\frac{\pi}{6}\right) Ai(-\beta_s) \tag{7.45}$$

In Soviet publications (Ref. 14) these integrals have been defined as follows:

$$V(x, y_1, y_2, q) = \exp\left(-i\frac{\pi}{4}\right)\sqrt{\frac{x}{\pi}}\int_\Gamma \exp(ixt)\, F(t, y_1, y_2, q)\, dt \tag{7.46}$$

$$V_1(z, y, q) = \frac{1}{\sqrt{\pi}}\int_\Gamma \exp(izt)\, \Phi(t, y, q)\, dt \tag{7.47}$$

where for $y_2 > y_1$,

$$F(t, y_1, y_2, q) = w_1(t - y_2)\, \Phi(t, y_1, q) \tag{7.48}$$

$$\Phi(t, y, q) = v(t - y) - \frac{v'(t) - qv(t)}{w_1'(t) - qw_1(t)}\, w_1(t - y)$$

$$= \frac{i}{2}\left\{w_2(t - y) - \frac{w_2'(t) - q\,w_2(t)}{w_1'(t) - q\,w_1(t)}\, w_1(t - y)\right\} \tag{7.49}$$

where Γ is a contour which starts at infinity in the sector $\frac{\pi}{3} < \arg t < \pi$, passes between the origin and the pole of the integrand nearest the origin, and then ends at infinity in the sector $-\frac{\pi}{3} < \arg t < \frac{\pi}{3}$.

Some special cases of these integrals have been given other symbolic designations by the Soviets. For example,

$$g(z) = V_1(z, 0, 0) = \frac{1}{\sqrt{\pi}}\int_\Gamma \exp(izt)\, \frac{1}{w_1'(t)}\, dt \tag{7.50}$$

$$f(z) = \left.\frac{\partial V_1(z, y, \infty)}{\partial y}\right|_{y=0} = \frac{1}{\sqrt{\pi}}\int_\Gamma \exp(izt)\, \frac{1}{w_1(t)}\, dt \tag{7.51}$$

We also find in Soviet literature

$$V_{11}(\zeta, q) = -\frac{\exp\left(i\frac{\pi}{4}\right)}{\sqrt{\pi}} \int_{\Gamma} \exp(i\zeta t) \frac{v'(t) - q\,v(t)}{w_1'(t) - q\,w_1(t)}\, dt \tag{7.52}$$

and

$$\hat{f}(\zeta) = -V_{11}(\zeta, \infty) = \frac{\exp\left(i\frac{\pi}{4}\right)}{\sqrt{\pi}} \int_{\Gamma} \exp(i\zeta t) \frac{v(t)}{w_1(t)}\, dt \tag{7.53}$$

$$\hat{g}(\zeta) = -V_{11}(\zeta, 0) = \frac{\exp\left(i\frac{\pi}{4}\right)}{\sqrt{\pi}} \int_{\Gamma} \exp(i\zeta t) \frac{v'(t)}{w_1'(t)}\, dt \tag{7.54}$$

and

$$\tilde{f}(\zeta) = \frac{\exp\left(i\frac{\pi}{4}\right)}{2\sqrt{\pi}\,\zeta} + \hat{f}(\zeta) \tag{7.55}$$

$$\tilde{g}(\zeta) = \frac{\exp\left(i\frac{\pi}{4}\right)}{2\sqrt{\pi}\,\zeta} + \hat{g}(\zeta) \tag{7.56}$$

The notations introduced by Fock and his co-workers have not been strictly adhered to in this report.

We follow Fock and define

$$f(\xi) = \frac{1}{\sqrt{\pi}} \int_{\Gamma} \exp(i\xi t) \frac{1}{w_1(t)}\, dt \tag{7.57}$$

$$g(\xi) = \frac{1}{\sqrt{\pi}} \int_{\Gamma} \exp(i\xi t) \frac{1}{w_1'(t)}\, dt \tag{7.58}$$

$$F(\xi) = \exp\left(i\,\frac{\xi^3}{3}\right) f(\xi) \tag{7.59}$$

$$G(\xi) = \exp\left(i\,\frac{\xi^3}{3}\right) g(\xi) \tag{7.60}$$

In the case of Fock's $V(x, 0, 0, 0)$ and $\frac{\partial^2}{\partial y_1 \partial y_2} V(x, 0, 0, \infty)$ we define

$$u(\xi) = \exp\left(-i\frac{3\pi}{4}\right) \xi^{3/2} \frac{1}{\sqrt{\pi}} \int_\Gamma \exp(i\xi t) \frac{w_1'(t)}{w_1(t)} dt = -\frac{i}{\xi} \frac{\partial^2}{\partial y_1 \partial y_2} V(\xi, 0, 0, \infty) \tag{7.61}$$

$$v(\xi) = \exp\left(-i\frac{\pi}{4}\right) \frac{1}{2}\sqrt{\frac{\xi}{\pi}} \int_\Gamma \exp(i\xi t) \frac{w_1(t)}{w_1'(t)} dt = \frac{1}{2} V(\xi, 0, 0, 0) \tag{7.62}$$

In place of Fock's $\hat{f}$, $\hat{g}$, V_{11}, $\tilde{f}$, $\tilde{g}$ we define

$$\hat{p}(\xi) = \frac{1}{\sqrt{\pi}} \int_\Gamma \exp(i\xi t) \frac{v(t)}{w_1(t)} dt = \exp\left(-i\frac{\pi}{4}\right) \hat{f}(\xi) \tag{7.63}$$

$$\hat{q}(\xi) = \frac{1}{\sqrt{\pi}} \int_\Gamma \exp(i\xi t) \frac{v'(t)}{w_1'(t)} dt = \exp\left(-i\frac{\pi}{4}\right) \hat{g}(\xi) \tag{7.64}$$

$$\hat{V}_2(\xi, q) = V_{11}(\xi, q)$$

$$p(\xi) = \exp\left(-i\frac{\pi}{4}\right) \tilde{f}(\xi) \quad , \quad q(\xi) = \exp\left(-i\frac{\pi}{4}\right) \tilde{g}(\xi) \tag{7.65}$$

so that

$$\hat{p}(\xi) = -\frac{i}{2\sqrt{\pi}\,\xi} + p(\xi) \tag{7.66}$$

$$\hat{q}(\xi) = -\frac{1}{2\sqrt{\pi}\,\xi} + q(\xi) \tag{7.67}$$

We have also defined a set of integrals

$$P(\xi) = \frac{2}{\sqrt{-\xi}} \exp\left[i\left(\frac{\xi^3}{12} + \frac{\pi}{4}\right)\right] \hat{p}(\xi) \tag{7.68}$$

$$Q(\xi) = \frac{2}{\sqrt{-\xi}} \exp\left[i\left(\frac{\xi^3}{12} + \frac{\pi}{4}\right)\right] \hat{q}(\xi) \tag{7.69}$$

which have the properties

$$P(\xi) \xrightarrow[\xi \to -\infty]{} 1 - i\,\frac{2}{\xi^3} + \frac{20}{\xi^6} + \ldots \tag{7.70}$$

$$Q(\xi) \xrightarrow[\xi \to -\infty]{} -1 - i\,\frac{2}{\xi^3} + \frac{28}{\xi^6} + \ldots \tag{7.71}$$

The Soviets have defined

$$\hat{F}(\xi) = \exp\left(i\,\frac{\xi^3}{12}\right)\hat{f}(\xi) = \exp\left[i\left(\frac{\xi^3}{12} + \frac{\pi}{4}\right)\right]\hat{p}(\xi) \tag{7.72}$$

$$\hat{G}(\xi) = \exp\left(i\,\frac{\xi^3}{12}\right)\hat{g}(\xi) = \exp\left[i\left(\frac{\xi^3}{12} + \frac{\pi}{4}\right)\right]\hat{q}(\xi) \tag{7.73}$$

so that

$$P(\xi) = \frac{2}{\sqrt{-\xi}}\,\hat{F}(\xi) \tag{7.74}$$

$$Q(\xi) = \frac{2}{\sqrt{-\xi}}\,\hat{G}(\xi) \tag{7.75}$$

In this study, a set of generalized diffraction integrals have been defined. For these the notations are:

$$\left.\begin{aligned} J^{(n)}(\xi) &= \frac{i^n}{2\pi i}\int_\Gamma t^n \exp(i\xi t)\,\frac{w_1'(t)}{w_1(t)}\,dt \\ K^{(n)}(\xi) &= \frac{i^n}{2\pi i}\int_\Gamma t^n \exp(i\xi t)\,\frac{w_1(t)}{w_1'(t)}\,dt \end{aligned}\right\} \quad 0 < \xi < \infty \tag{7.76}$$

(continued)

$$\left.\begin{aligned}
f^{(n)}(\xi) &= \frac{i^n}{\sqrt{\pi}} \int_\Gamma t^n \exp(i\xi t) \frac{1}{w_1(t)}\, dt \\
g^{(n)}(\xi) &= \frac{i^n}{\sqrt{\pi}} \int_\Gamma t^n \exp(i\xi t) \frac{1}{w'(t)}\, dt \\
\hat{p}^{(n)}(\xi) &= \frac{i^n}{\sqrt{\pi}} \int_\Gamma t^n \exp(i\xi t) \frac{v(t)}{w_1(t)}\, dt \\
\hat{q}^{(n)}(\xi) &= \frac{i^n}{\sqrt{\pi}} \int_\Gamma t^n \exp(i\xi t) \frac{v'(t)}{w'(t)}\, dt
\end{aligned}\right\} \quad -\infty < \xi < \infty \tag{7.76}$$

We observe that

$$\begin{aligned}
u(\xi) &= 2\sqrt{\pi} \exp\left(-i\frac{\pi}{4}\right) \xi^{3/2} J^{(o)}(\xi) \\
v(\xi) &= \sqrt{\pi} \exp\left(i\frac{\pi}{4}\right) \xi^{1/2} K^{(o)}(\xi) \\
f(\xi) &= f^{(o)}(\xi) \\
g(\xi) &= g^{(o)}(\xi) \\
\hat{p}(\xi) &= p^{(o)}(\xi) \\
\hat{q}(\xi) &= q^{(o)}(\xi)
\end{aligned} \tag{7.77}$$

For $n > 0$ we observe that

$$f^{(n)}(\xi) = \frac{d^n}{d\xi^n} f(\xi)$$

$$g^{(n)}(\xi) = \frac{d^n}{d\xi^n} g(\xi)$$

$$\hat{p}^{(n)}(\xi) = \frac{d^n}{d\xi^n} \hat{p}(\xi)$$

$$\hat{q}^{(n)}(\xi) = \frac{d^n}{d\xi^n} \hat{q}(\xi)$$

$$J^{(n)}(\xi) = \frac{d^n}{d\xi^n} J^{(o)}(\xi)$$

$$K^{(n)}(\xi) = \frac{d^n}{d\xi^n} K^{(o)}(\xi) \tag{7.78}$$

For all values of n we observe that

$$Z^{(n+1)}(\xi) = \frac{d}{d\xi} Z^{(n)}(\xi)$$

where $Z^{(n)}(\xi)$ denotes any of the functions $J^{(n)}(\xi)$, $K^{(n)}(\xi)$, $f^{(n)}(\xi)$, $g^{(n)}(\xi)$, $\hat{p}^{(n)}(\xi)$, $\hat{q}^{(n)}(\xi)$. For $\xi > 0$ we also have the property

$$Z^{(n)}(\xi) = -\int_{\xi}^{\infty} Z^{(n-1)}(\xi)\, d\xi$$

We have also defined a set of functions

$$J_m^{(n)}(\xi) = \frac{i^n}{2\pi i} \int_\Gamma t^n \exp(i\xi t) \left[\frac{w_1'(t)}{w_1(t)}\right]^{m+1} dt$$

$$K_m^{(n)}(\xi) = \frac{i^n}{2\pi i} \int_\Gamma t^n \exp(i\xi t) \left[\frac{w_1(t)}{w_1'(t)}\right]^{m+1} dt$$

$$f_m^{(n)}(\xi) = \frac{i^n}{\sqrt{\pi}} \int_\Gamma t^n \exp(i\xi t) \frac{1}{w_1(t)} \left[\frac{w_1'(t)}{w_1(t)}\right]^{m} dt$$

$$g_m^{(n)}(\xi) = \frac{i^n}{\sqrt{\pi}} \int_\Gamma t^n \exp(i\xi t) \frac{1}{w_1'(t)} \left[\frac{w_1(t)}{w_1'(t)}\right]^{m} dt$$

$$r_m^{(n)}(\xi) = \frac{i^n}{\sqrt{\pi}} \int_\Gamma t^n \exp(i\xi t) \frac{1}{[w_1(t)]^2} \left[\frac{w_1'(t)}{w_1(t)}\right]^{m} dt$$

$$s_m^{(n)}(\xi) = \frac{i^n}{\sqrt{\pi}} \int_\Gamma t^n \exp(i\xi t) \frac{1}{[w_1'(t)]} \left[\frac{w_1(t)}{w_1'(t)}\right]^{m} dt \qquad (7.79)$$

which also possess the property

$$Z_m^{(n+1)}(\xi) = \frac{d}{d\xi} Z_m^n(\xi)$$

For $m = 0$ we have

$$J_o^{(n)}(\xi) = J^{(n)}(\xi) \qquad K_o^{(n)}(\xi) = K^{(n)}(\xi)$$

$$f_o^{(n)}(\xi) = f^{(n)}(\xi) \qquad g_o^{(n)}(\xi) = g^{(n)}(\xi) \qquad (7.80)$$

and we define

$$r_o^{(n)}(\xi) = r^{(n)}(\xi) = \frac{i^n}{\sqrt{\pi}} \int_\Gamma t^n \exp(i\xi t) \frac{1}{[w_1(t)]^2} dt$$

$$s_o^{(n)}(\xi) = s^{(n)}(\xi) = \frac{i^n}{\sqrt{\pi}} \int_\Gamma t^n \exp(i\xi t) \frac{1}{[w_1'(t)]^2} dt \tag{7.81}$$

and

$$r_o^{(o)}(\xi) = r(\xi) = \frac{1}{\sqrt{\pi}} \int_\Gamma \exp(i\xi t) \frac{1}{[w_1(t)]^2} dt$$

$$s_o^{(o)}(\xi) = s(\xi) = \frac{1}{\sqrt{\pi}} \int_\Gamma \exp(i\xi t) \frac{1}{[w_1'(t)]^2} dt \tag{7.82}$$

The properties

$$\frac{d}{dt}\left(\frac{v(t)}{w_1(t)}\right) = -\frac{1}{w_1^2(t)} \quad , \quad \frac{d}{dt}\left(\frac{v'(t)}{w_1'(t)}\right) = \frac{t}{[w_1'(t)]^2} \tag{7.83}$$

can be used to show that

$$r(\xi) = i\xi\,\hat{p}(\xi)$$

$$s^{(1)}(\xi) = \frac{ds(\xi)}{d\xi} = \xi\,\hat{q}(\xi) \tag{7.84}$$

More generally, we have

$$\frac{i^n}{\sqrt{\pi}} \int_\Gamma t^n \exp(i\xi t) \frac{1}{[w_1(t)]^2} dt = \frac{i^n}{\sqrt{\pi}} \int_\Gamma \frac{v(t)}{w_1(t)} \frac{d}{dt}\left\{t^n \exp(i\xi t)\right\} dt$$

$$= \frac{i^n}{\sqrt{\pi}} \int_\Gamma \frac{v(t)}{w_1(t)} \left\{i\xi t^n + nt^{n-1}\right\} \exp(i\xi t)\, dt$$

so that

$$r^{(n)}(\xi) = i\xi\,\hat{p}^{(n)}(\xi) + in\,\hat{p}^{(n-1)}(\xi) \tag{7.85}$$

In a similar manner we obtain

$$s^{(n+1)}(\xi) = \xi\,\hat{q}^{(n)}(\xi) + n\hat{q}^{(n-1)}(\xi) \tag{7.86}$$

We have also defined the functions

$$u^{(n)}(\xi) = 2\sqrt{\pi}\exp\left(-i\frac{\pi}{4}\right)\xi^{3/2}\,J^{(n)}(\xi) = \xi^{3/2}\frac{d^n}{d\xi^n}\left\{\xi^{-3/2}\,u^{(o)}(\xi)\right\}$$

$$v^{(n)}(\xi) = \sqrt{\pi}\,\exp\left(i\frac{\pi}{4}\right)\xi^{1/2}\,K^{(n)}(\xi) = \xi^{1/2}\frac{d^n}{d\xi^n}\left\{\xi^{-1/2}v^{(o)}(\xi)\right\} \tag{7.87}$$

and

$$\hat{u}(\xi) = \frac{1}{\sqrt{\pi}}\int_{-\infty}^{\infty}\exp(i\xi t)\,\frac{w_1'(t)}{w_1(t)}\,dt$$

$$\hat{v}(\xi) = \frac{1}{\sqrt{\pi}}\int_{-\infty}^{\infty}\exp(i\xi t)\,\frac{w_1(t)}{w_1'(t)}\,dt$$

$$c(\xi) = \frac{1}{\sqrt{\pi}}\int_{-\infty}^{\infty}\exp(i\xi t)\,v'(t)\,\frac{w_1'(t)}{w_1(t)}\,dt$$

$$d(\xi) = \frac{1}{\sqrt{\pi}}\int_{-\infty}^{\infty}\exp(i\xi t)\,v(t)\,\frac{w_1'(t)}{w_1'(t)}\,dt$$

$$\hat{k}(\xi) = \frac{1}{\sqrt{\pi}}\int_{-\infty}^{\infty}\exp(i\xi t)\,\frac{v'(t)}{w_1(t)}\,dt$$

$$\hat{i}(\xi) = \frac{1}{\sqrt{\pi}}\int_{-\infty}^{\infty}\exp(i\xi t)\,\frac{v(t)}{w_1'(t)}\,dt \tag{7.88}$$

Section 8
ALTERNATIVE PATHS OF INTEGRATION

In the last section we expressed the integrals in the form

$$\underbrace{\int_{-\infty}^{\infty} \exp(i\xi t) \ldots dt}_{\text{Pryce's form}} \qquad \text{or} \qquad \underbrace{\int_{\Gamma} \exp(i\xi t) \ldots dt}_{\text{Fock's form}}$$

We also find it convenient to follow a suggestion made by Rice in 1954 (Ref. 34) and express these functions in the form of inverse Laplace transforms. This can be done by rotating the coordinate system by defining

$$\alpha = \exp\left(i \frac{2\pi}{3}\right)t$$

and by using the properties of the Airy functions which are given in Fig. 13. We then define

$$x = \xi \exp(-i\,\pi/6) = (\sqrt{3} - i)(\xi/2) \tag{8.1}$$

and arrive at the following forms

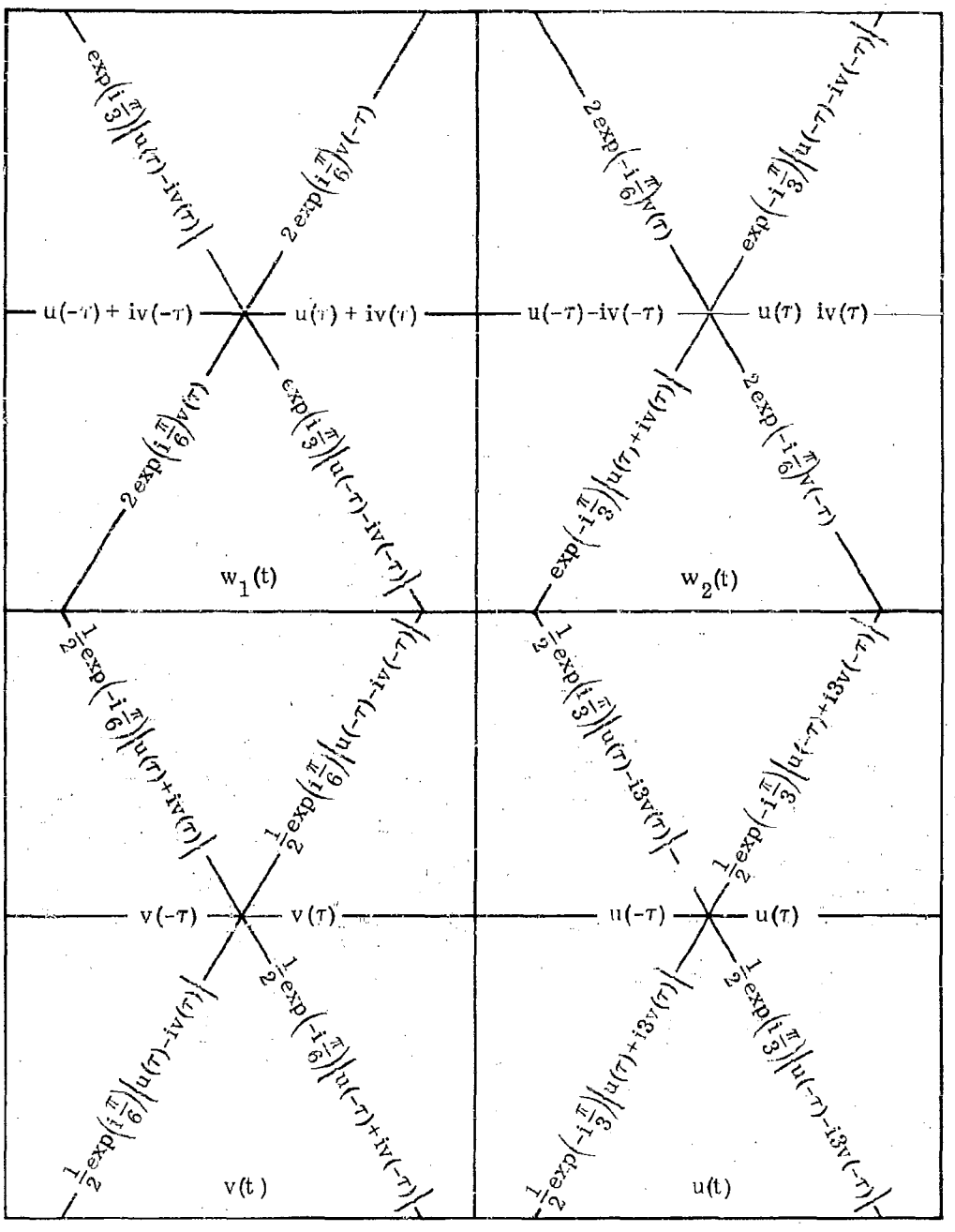

Fig. 13 Behavior of Airy Functions on the Rays $\arg t = \frac{n\pi}{3}$, $\tau = \text{Mod } t$

$$
\left.
\begin{aligned}
J^{(n)}(\xi) &= \frac{\exp\left(-i\frac{n}{6}\pi\right)}{2\pi i}\int_{c-i\infty}^{c+i\infty} \alpha^n \exp(x\alpha)\frac{Ai'(\alpha)}{Ai(\alpha)}\,d\alpha \\
K^{(n)}(\xi) &= \frac{\exp\left(-i\frac{n-2}{6}\pi\right)}{2\pi i}\int_{c-i\infty}^{c+i\infty} \alpha^n \exp(x\alpha)\frac{Ai(\alpha)}{Ai'(\alpha)}\,d\alpha \\
f^{(n)}(\xi) &= \frac{\exp\left(-i\frac{n+4}{6}\pi\right)}{2\pi i}\int_{c-i\infty}^{c+i\infty} \alpha^n \exp(x\alpha)\frac{1}{Ai(\alpha)}\,d\alpha \\
g^{(n)}(\xi) &= -\frac{\exp\left(-i\frac{n}{6}\pi\right)}{2\pi i}\int_{c-i\infty}^{c+i\infty} \alpha^n \exp(x\alpha)\frac{1}{Ai'(\alpha)}\,d\alpha \\
\hat{p}^{(n)}(\xi) &= \frac{\exp\left(-i\frac{n+4}{6}\pi\right)}{2\pi i}\int_{c-i\infty}^{c+i\infty} \alpha^n \exp(x\alpha)\frac{Ai\left[\exp\left(-i\frac{2\pi}{3}\right)\alpha\right]}{Ai(\alpha)}\,d\alpha \\
\hat{q}^{(n)}(\xi) &= -\frac{\exp\left(-i\frac{n}{6}\pi\right)}{2\pi i}\int_{c-i\infty}^{c+i\infty} \alpha^n \exp(x\alpha)\frac{Ai'\left[\exp\left(-i\frac{2\pi}{3}\right)\alpha\right]}{Ai'(\alpha)}\,d\alpha
\end{aligned}
\right\}
\text{Inverse Laplace transform representation}
\tag{8.2}
$$

where, for $n \geq 0$, we can take c to be any real constant larger than the smallest root of the Airy integral appearing in the denominator. For $n < 0$ the integrands are singular at the origin; in this case we take $c = 0$ and define the contour to be indented at the origin by a half-circle lying in the left-half plane. Rice deformed the contour to a form equivalent to that used by Fock, namely,

$$
\int_{c-i\infty}^{c+i\infty} \exp(x\alpha)\ldots d\alpha = \int_{L} \exp(x\alpha)\ldots d\alpha
$$

where L is the contour illustrated in Fig. 14 where $\alpha_1 \ldots \alpha_n \ldots$ denotes the roots of the Airy functions $Ai(\alpha)$ or $Ai'(\alpha)$.

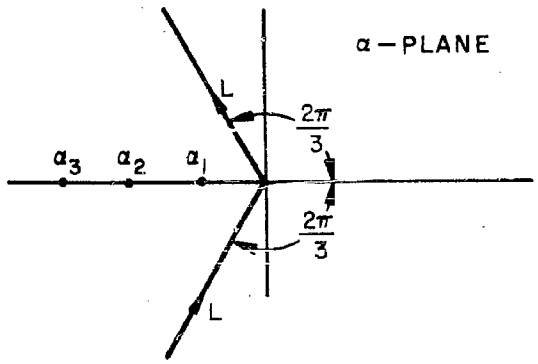

Fig. 14 The Contour L

If we use the Wronskian relation

$$Ai(\alpha)\, Bi'(\alpha) - Ai'(\alpha)\, Bi(\alpha) = \frac{1}{\pi}$$

and the relations

$$Ai\left[\exp\left(-i\,\frac{2\pi}{3}\right)\alpha\right] = \frac{1}{2}\exp\left(i\,\frac{\pi}{6}\right)\left\{Bi(\alpha) - i\,Ai(\alpha)\right\}$$

$$Ai'\left[\exp\left(-i\,\frac{2\pi}{3}\right)\alpha\right] = \frac{1}{2}\exp\left(i\,\frac{5\pi}{6}\right)\left\{Bi'(\alpha) - i\,Ai'(\alpha)\right\} \tag{8.3}$$

we find that

$$\frac{d}{d\alpha}\left\{\frac{Ai\left[\exp\left(-i\,\frac{2\pi}{3}\right)\alpha\right]}{Ai(\alpha)}\right\} = \frac{1}{2\pi}\,\frac{\exp\left(i\,\frac{\pi}{6}\right)}{\left[Ai(\alpha)\right]^2} \tag{8.4}$$

and

$$\frac{d}{d\alpha}\left\{\frac{Ai'\left[\exp\left(-i\,\frac{2\pi}{3}\right)\alpha\right]}{Ai'(\alpha)}\right\} = \frac{1}{2\pi}\,\frac{\alpha\,\exp\left(-i\,\frac{\pi}{6}\right)}{\left[Ai'(\alpha)\right]^2} \tag{8.5}$$

For $x \neq 0$ (i.e., for $\xi \neq 0$), these results permit us to write

$$\hat{p}(\xi) = -\frac{\exp\left(i\frac{\pi}{6}\right)}{2\sqrt{\pi}} \int_L \exp(x\alpha) \frac{Ai\left[\exp\left(-i\frac{2\pi}{3}\right)\alpha\right]}{Ai(\alpha)} d\alpha$$

$$= -\frac{\exp\left(i\frac{\pi}{6}\right)}{2\sqrt{\pi}} \int_L \frac{d}{d\alpha}\left\{\frac{\exp(x\alpha)}{x} \frac{Ai\left[\exp\left(-i\frac{2\pi}{3}\right)\alpha\right]}{Ai(\alpha)}\right\} d\alpha + \frac{\exp\left(i\frac{\pi}{6}\right)}{2\sqrt{\pi}\, x} \int_L \exp(x\alpha)$$

$$\frac{d}{d\alpha} \frac{Ai\left[\exp\left(-i\frac{2\pi}{3}\right)\alpha\right]}{Ai(\alpha)} d\alpha = \frac{1}{2\pi} \frac{\exp\left(i\frac{\pi}{3}\right)}{2\sqrt{\pi}\, x} \int_L \exp(x\alpha) \frac{1}{\left[Ai(\alpha)\right]^2} d\alpha \tag{8.6}$$

and

$$\hat{q}(\xi) = \frac{i}{2\sqrt{\pi}} \int_L \exp(x\alpha) \frac{Ai'\left[\exp\left(-i\frac{2\pi}{3}\right)\alpha\right]}{Ai'(\alpha)} d\alpha = \frac{i}{2\sqrt{\pi}} \int_L \frac{d}{d\alpha}$$

$$\left\{\frac{\exp(x\alpha)}{x} \frac{Ai'\left[\exp\left(-i\frac{2\pi}{3}\right)\alpha\right]}{Ai'(\alpha)}\right\} d\alpha - \frac{i}{2\sqrt{\pi}\, x} \int_L \exp(x\alpha) \frac{d}{d\alpha} \frac{Ai'\left[\exp\left(-i\frac{2\pi}{3}\right)\alpha\right]}{Ai'(\alpha)} d\alpha$$

$$= -\frac{1}{2\pi} \frac{\exp\left(i\frac{\pi}{3}\right)}{2\sqrt{\pi}\, x} \int_L \exp(x\alpha) \frac{\alpha}{\left[Ai'(\alpha)\right]^2} d\alpha \tag{8.7}$$

since

$$\int_L \frac{d}{d\alpha}\left\{\frac{\exp(x\alpha)}{x} \frac{Ai\left[\exp\left(-i\frac{2\pi}{3}\right)\alpha\right]}{Ai(\alpha)}\right\} d\alpha$$

$$= \lim_{R\to\infty}\left\{\frac{\exp(x\alpha)}{x} \frac{Ai\left[\exp\left(-i\frac{2\pi}{3}\right)\alpha\right]}{Ai(\alpha)}\right\}\Bigg|_{\alpha = R\exp -i\frac{2\pi}{3}}^{\alpha = R\exp i\frac{2\pi}{3}} = \lim_{R\to\infty} \frac{\exp(\beta R)}{\beta} = 0$$

and

$$\int_L \frac{d}{d\alpha}\left\{\frac{\exp(x\alpha)}{x}\;\frac{Ai'\left[\exp\left(-i\frac{2\pi}{3}\right)\alpha\right]}{Ai'(\alpha)}\right\}d\alpha$$

$$= \lim_{R\to\infty}\left\{\frac{\exp(x\alpha)}{x}\;\frac{Ai'\left[\exp\left(-i\frac{2\pi}{3}\right)\alpha\right]}{Ai'(\alpha)}\right\}\Bigg|_{\alpha = R\exp\left(i\frac{2\pi}{3}\right)}^{\alpha = R\exp\left(-i\frac{2\pi}{3}\right)} = \exp\left(i\,\frac{2\pi}{3}\right)\lim_{R\to\infty}\frac{\exp(\beta R)}{\beta} = 0$$

where $\beta = \exp\left(-i\frac{5\pi}{6}\right)\xi = -\frac{1}{2}(\sqrt{3} + i)\xi$. If $\xi = 0$ this integral is not defined. In the evaluation of these limits we have used the properties

$$Ai\left[R\exp(i\delta)\right] \xrightarrow[R\to\infty]{} \frac{1}{2\sqrt{\pi}\,R^{1/4}}\exp\left(-\frac{2}{3}R^{3/2}\cos\frac{3}{2}\delta\right)\exp\left[-i\left(\frac{2}{3}R^{3/2}\sin\frac{3}{2}\delta + \frac{\delta}{4}\right)\right]$$

$$Ai'\left[R\exp(i\delta)\right] \xrightarrow[R\to\infty]{} -\frac{R^{1/4}}{2\sqrt{\pi}}\exp\left(-\frac{2}{3}R^{3/2}\cos\frac{3}{2}\delta\right)\exp\left[-i\left(\frac{2}{3}R^{3/2}\sin\frac{3}{2}\delta - \frac{\delta}{4}\right)\right]$$

valid for $\delta \neq \pi$. The representations

$$\boxed{\hat{p}(\xi) = \frac{1}{2\pi}\,\frac{\exp\left(i\frac{\pi}{3}\right)}{2\sqrt{\pi}\,x}\int_L \exp(x\alpha)\,\frac{1}{\left[Ai(\alpha)\right]^2}\,d\alpha \;\Bigg|\; \hat{q}(\xi) = -\frac{1}{2\pi}\,\frac{\exp\left(i\frac{\pi}{3}\right)}{2\sqrt{\pi}\,x}\int_L \exp(x\alpha)\,\frac{\alpha}{\left[Ai'(\alpha)\right]^2}\,d\alpha}$$

offer a number of advantages over the previous representation.

The integrals

$$\frac{\exp\left(i\frac{\pi}{6}\right)}{2\pi}\int_L \frac{1}{\left[Ai(\alpha)\right]^2}\,d\alpha = \int_L \frac{d}{d\alpha}\,\frac{Ai\left[\exp\left(-i\frac{2\pi}{3}\right)\alpha\right]}{Ai(\alpha)}\,d\alpha$$

$$= \lim_{R\to\infty}\left\{\frac{Ai\left[\exp\left(-i\frac{2\pi}{3}\right)\alpha\right]}{Ai(\alpha)}\right\}\Bigg|_{\alpha=R\exp\left(-i\frac{2\pi}{3}\right)}^{\alpha=R\exp\left(i\frac{2\pi}{3}\right)} = \exp\left(i\frac{2\pi}{3}\right)$$

$$\frac{\exp\left(-i\frac{\pi}{6}\right)}{2\pi}\int_L \frac{\alpha}{\left[Ai'(\alpha)\right]^2}\,d\alpha = \int_L \frac{d}{d\alpha}\,\frac{Ai'\left[\exp\left(-i\frac{2\pi}{3}\right)\alpha\right]}{Ai'(\alpha)}\,d\alpha$$

$$= \lim_{R\to\infty}\left\{\frac{Ai'\left[\exp\left(-i\frac{2\pi}{3}\right)\alpha\right]}{Ai'(\alpha)}\right\}\Bigg|_{\alpha=R\exp\left(-i\frac{2\pi}{3}\right)}^{\alpha=R\exp\left(i\frac{2\pi}{3}\right)} = -\exp\left(i\frac{\pi}{3}\right)$$

permit us to show that

$$\boxed{\begin{array}{l} \hat{p}(\xi) \xrightarrow[\xi\to 0]{} -\dfrac{\exp\left(-i\frac{\pi}{6}\right)}{2\sqrt{\pi}\;x} = -\dfrac{1}{2\sqrt{\pi}\,\xi} \\ \hline \hat{q}(\xi) \xrightarrow[\xi\to 0]{} -\dfrac{\exp\left(-i\frac{\pi}{6}\right)}{2\sqrt{\pi}\;x} = -\dfrac{1}{2\sqrt{\pi}\,\xi} \end{array}} \qquad (8.8)$$

Since $x = \xi\exp\left(-i\frac{\pi}{6}\right)$ we observe that

$$i\,\xi\,\hat{p}(\xi) = x\exp\left(i\frac{2\pi}{3}\right)\hat{p}(\xi) = -\frac{1}{2\pi}\,\frac{1}{2\sqrt{\pi}}\int_L \exp(x\alpha)\,\frac{1}{\left[Ai(\alpha)\right]^2}\,d\alpha = r(\xi)$$

$$\xi\,\hat{q}(\xi) = x\exp\left(i\frac{\pi}{6}\right)\hat{q}(\xi) = -\frac{1}{2\pi}\,\frac{1}{2\sqrt{\pi}}\int_L \exp(x\alpha)\,\frac{\alpha}{\left[Ai'(\alpha)\right]^2}\,d\alpha = s^{(1)}(\xi) \qquad (8.9)$$

These representations for the integrals have the remarkable property of involving only $Ai(\alpha)$ and $Ai'(\alpha)$. In order to justify the rotation of the contours, or other modifications of the path of integration, we need only consider the asymptotic behavior of $Ai(\alpha)$, $Ai'(\alpha)$ for $\alpha \to \infty$. The asymptotic estimates

$$Ai\left[w \exp(i\delta)\right] \xrightarrow[w \to \infty]{} \frac{1}{2\sqrt{\pi}\sqrt[4]{w}} \exp(-i\,\delta/4) \exp\left[-\frac{2}{3} w^{3/2} \exp(i\,\frac{3\delta}{2})\right], \quad -\pi < \delta < \pi$$

$$Ai(-w) \xrightarrow[w \to \infty]{} \frac{1}{\sqrt{\pi}\sqrt[4]{w}} \sin\left[\frac{2}{3} w^{3/2} + \frac{\pi}{4}\right] \tag{8.10}$$

are well known. The asymptotic form involving the sine is actually valid for $Ai\left[-w \exp(i\,\delta)\right]$ in the more extended region $-\frac{\pi}{3} < \delta < \frac{\pi}{3}$. For large w and fixed δ, however, it coincides with the first expression because one of the exponential parts of the sine is negligible compared with the other. It is better to take the result to be of the form

$$Ai\left[\rho \exp(i\phi)\right] \xrightarrow[\rho \to \infty]{}$$

$$\begin{cases} \frac{1}{2\sqrt{\pi}} \rho^{-1/4} \exp\left(-i\frac{\phi}{4}\right) \exp\left[-\frac{2}{3} \rho^{3/2} \exp\left(i\frac{3\phi}{2}\right)\right] & -\frac{2\pi}{3} < \phi < \frac{2\pi}{3} \\ \frac{1}{2\sqrt{\pi}} \rho^{-1/4} \exp\left(-i\frac{\phi}{4}\right) \left\{\exp\left[-\frac{2}{3} \rho^{3/2} \exp\left(i\frac{3\phi}{2}\right)\right] \pm \frac{i}{2} \exp\left[\frac{2}{3} \rho^{3/2} \exp\left(i\frac{3\phi}{2}\right)\right]\right\} & \phi = \pm\frac{2\pi}{3} \\ \frac{1}{2\sqrt{\pi}} \rho^{-1/4} \exp\left(-i\frac{\phi}{4}\right) \left\{\exp\left[-\frac{2}{3} \rho^{3/2} \exp\left(i\frac{3\phi}{2}\right)\right] + i \exp\left[\frac{2}{3} \rho^{3/2} \exp\left(i\frac{3\phi}{2}\right)\right]\right\} & \begin{matrix} \frac{2\pi}{3} < \phi < \frac{4\pi}{3} \\ -\frac{4\pi}{3} < \phi < -\frac{2\pi}{3} \end{matrix} \\ \frac{1}{\sqrt{\pi}} \rho^{-1/4} \sin\left[\frac{2}{3} \rho^{3/2} + \frac{\pi}{4}\right] & |\phi| = \pi \end{cases}$$

(8.11)

We observe that

$$\mathrm{Ai}(x + iy) = \overline{\mathrm{Ai}(x - iy)} \quad \text{or} \quad \mathrm{Ai}(z) = \overline{\mathrm{Ai}(\bar{z})}$$

where the bar denotes the complex conjugate. The behavior of $\left|\mathrm{Ai}\left[\rho \exp(i\phi)\right]\right|$ as a function of ρ is shown in Figs. 15 and 16.

Olver (Ref. 35) has presented the complete asymptotic expansions for the Airy integral in a concise form. He has defined

$$\xi = \frac{2}{3} z^{3/2}$$

$$u_s = \frac{(2s+1)(2s+3)(2s+5)\ldots(6s-1)}{s!\,(216)^s}, \qquad v_s = -\frac{6s+1}{6s-1}\, u_s$$

and

$$\left.\begin{aligned}
L(\xi) &= \sum_{s=0}^{\infty} \frac{u_s}{\xi^s} = 1 + \frac{3\cdot 5}{1!\,216}\frac{1}{\xi} + \frac{5\cdot 7\cdot 9\cdot 11}{2!\,(216)^2}\frac{1}{\xi^2} + \frac{7\cdot 9\cdot 11\cdot 13\cdot 15\cdot 17}{3!\,(216)^3}\frac{1}{\xi^3} + \cdots, \\
M(\xi) &= \sum_{s=0}^{\infty} \frac{v_s}{\xi^s} = 1 - \frac{3\cdot 7}{1!\,216}\frac{1}{\xi} - \frac{5\cdot 7\cdot 9\cdot 13}{2!\,(216)^2}\frac{1}{\xi^2} - \frac{7\cdot 9\cdot 11\cdot 13\cdot 15\cdot 19}{3!\,(216)^3}\frac{1}{\xi^3} - \cdots,
\end{aligned}\right\}$$

$$\left.\begin{aligned}
P(\xi) &= \sum_{s=0}^{\infty} (-)^s \frac{u_{2s}}{\xi^{2s}} = 1 - \frac{5\cdot 7\cdot 9\cdot 11}{2!\,(216)^2}\frac{1}{\xi^2} + \frac{9\cdot 11\cdot 13\cdot 15\cdot 17\cdot 19\cdot 21\cdot 23}{4!\,(216)^4}\frac{1}{\xi^4} - \cdots, \\
Q(\xi) &= \sum_{s=0}^{\infty} (-)^s \frac{u_{2s+1}}{\xi^{2s+1}} = \frac{3\cdot 5}{1!\,216}\frac{1}{\xi} - \frac{7\cdot 9\cdot 11\cdot 13\cdot 15\cdot 17}{3!\,(216)^3}\frac{1}{\xi^3} + \cdots, \\
R(\xi) &= \sum_{s=0}^{\infty} (-)^s \frac{v_{2s}}{\xi^{2s}} = 1 + \frac{5\cdot 7\cdot 9\cdot 13}{2!\,(216)^2}\frac{1}{\xi^2} - \frac{9\cdot 11\cdot 13\cdot 15\cdot 17\cdot 19\cdot 21\cdot 25}{4!\,(216)^4}\frac{1}{\xi^4} + \cdots, \\
S(\xi) &= \sum_{s=0}^{\infty} (-)^s \frac{v_{2s+1}}{\xi^{2s+1}} = -\frac{3\cdot 7}{1!\,216}\frac{1}{\xi} + \frac{7\cdot 9\cdot 11\cdot 13\cdot 15\cdot 19}{3!\,(216)^3}\frac{1}{\xi^3} - \cdots,
\end{aligned}\right\} \tag{8.12}$$

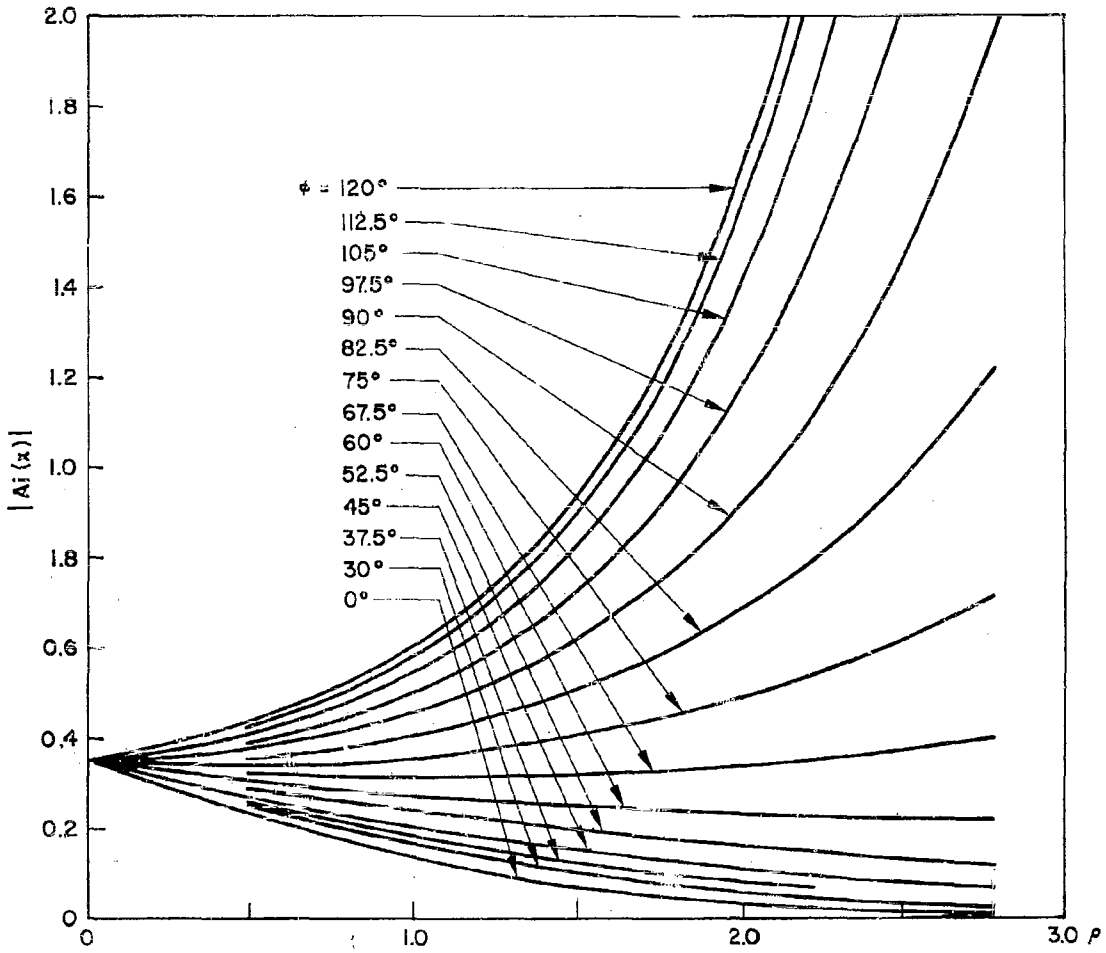

Fig. 15 Behavior of |Ai(x)| in Complex Plane

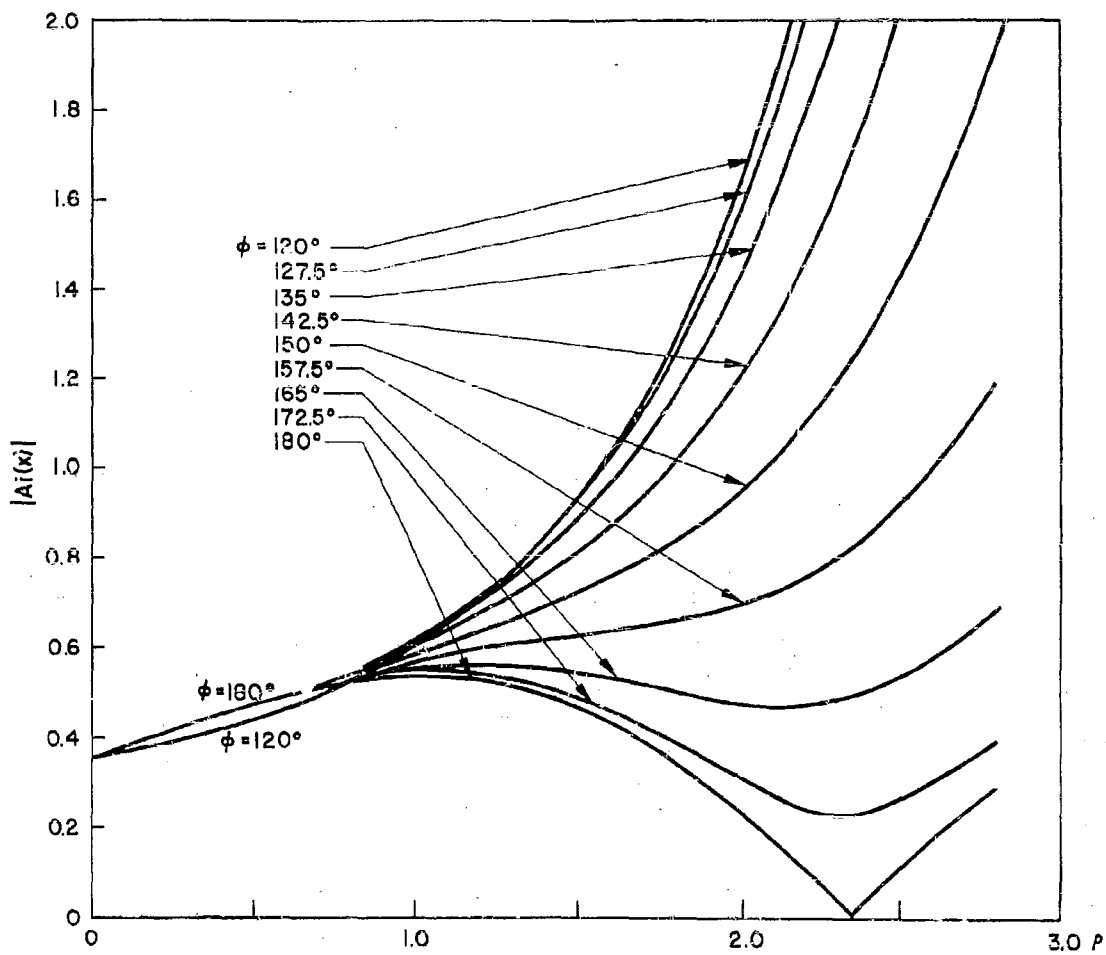

Fig. 16 Behavior of $|Ai(x)|$ in Complex Plane

Then if $|z|$ is large

$$\mathrm{Ai}(z) \sim \frac{1}{2}\pi^{-1/2} z^{-1/4} e^{-\xi} L(-\xi), \quad \mathrm{Ai}'(z) \sim -\frac{1}{2}\pi^{-1/2} z^{1/4} e^{-\xi} M(-\xi), \quad \left(|\arg z| < \frac{2\pi}{3}\right)$$

$$\left.\begin{aligned} \mathrm{Ai}(-z) &\sim \pi^{-1/2} z^{-1/4} \left\{\cos\left(\xi - \frac{1}{4}\pi\right) P(\xi) + \sin\left(\xi - \frac{1}{4}\pi\right) Q(\xi)\right\} \\ \mathrm{Ai}'(-z) &\sim \pi^{-1/2} z^{1/4} \left\{\cos\left(\xi - \frac{3}{4}\pi\right) R(\xi) + \sin\left(\xi - \frac{3}{4}\pi\right) S(\xi)\right\} \end{aligned}\right\} \left(|\arg z| < \frac{\pi}{3}\right) \tag{8.13}$$

For $\arg z = \pm \frac{2\pi}{3}$, we use the results $\left(\text{with } t = |z|, \quad \xi = \frac{2}{3} t^{3/2}\right)$

$$\begin{aligned} \mathrm{Ai}\left[t \exp\left(\pm i \frac{2\pi}{3}\right)\right] &= \frac{1}{2} \exp\left(\mp i \frac{\pi}{6}\right) \left\{\mathrm{Bi}(t) \pm i\mathrm{Ai}(t)\right\} \\ &\sim \frac{1}{2\sqrt{\pi}} t^{-\frac{1}{4}} \exp\left(\mp i \frac{\pi}{6}\right) \left\{\exp(\xi) L(\xi) \pm \frac{i}{2} \exp(-\xi) L(-\xi)\right\} \end{aligned} \tag{8.14}$$

$$\begin{aligned} \mathrm{Ai}'\left[t \exp\left(\pm i \frac{2\pi}{3}\right)\right] &= -\frac{1}{2} \exp\left(\pm i \frac{\pi}{6}\right) \left\{\mathrm{Bi}'(t) \pm i\mathrm{Ai}'(t)\right\} \\ &\sim -\frac{1}{2\sqrt{\pi}} t^{\frac{1}{4}} \exp\left(\pm i \frac{\pi}{6}\right) \left\{\exp(\xi) M(\xi) \mp \frac{i}{2} \exp(-\xi) M(-\xi)\right\} \end{aligned} \tag{8.15}$$

By closing the contour in Eq. (8.2) by a semi-circle at infinity in the left half plane (an operation which is valid when the real part of $x = \xi \exp\left(-i\frac{\pi}{6}\right)$ is greater than zero), it can be shown that

$$u(\xi) = 2\sqrt{\pi}\ \exp\left(-i\frac{\pi}{4}\right)\xi^{3/2}\sum_{s=1}^{\infty}\exp\left(-\frac{\sqrt{3}-i}{2}\alpha_s\xi\right)$$

$$v(\xi) = \sqrt{\pi}\exp\left(i\frac{\pi}{4}\right)\xi^{1/2}\sum_{s=1}^{\infty}\frac{1}{\beta_s}\exp\left(-\frac{\sqrt{3}-i}{2}\beta_s\xi\right)$$

$$f(\xi) = \exp\left(-i\frac{\pi}{3}\right)\sum_{s=1}^{\infty}\frac{1}{Ai'(-\alpha_s)}\exp\left(-\frac{\sqrt{3}-i}{2}\alpha_s\xi\right)$$

$$g(\xi) = \sum_{s=1}^{\infty}\frac{1}{\beta_s Ai(-\beta_s)}\exp\left(-\frac{\sqrt{3}-i}{2}\beta_s\xi\right)$$

$$\hat{p}(\xi) = -\frac{1}{2\sqrt{\pi}}\exp\left(-i\frac{\pi}{6}\right)\sum_{s=1}^{\infty}\frac{1}{\left[Ai'(-\alpha_s)\right]^2}\exp\left(-\frac{\sqrt{3}-i}{2}\alpha_s\xi\right)$$

$$\hat{q}(\xi) = -\frac{1}{2\sqrt{\pi}}\exp\left(-i\frac{\pi}{6}\right)\sum_{s=1}^{\infty}\frac{1}{\beta_s\left[Ai(-\beta_s)\right]^2}\exp\left(-\frac{\sqrt{3}-i}{2}\beta_s\xi\right) \tag{8.16}$$

These residue series representations show emphatically the importance of the constants α_s, $Ai'(-\alpha_s)$, β_s, $Ai(-\beta_s)$.

Section 9

ALTERNATIVE REPRESENTATIONS FOR THE INTEGRALS $u(\xi)$, $v(\xi)$

The residue series representations for the functions $u(\xi)$ and $v(\xi)$ become useless as ξ approaches zero. However, an alternative representation is easily found since the logarithmic derivatives

$$y(\alpha) = \frac{d}{d\alpha} \log Ai(\alpha) = \frac{Ai'(\alpha)}{Ai(\alpha)}$$

$$z(\alpha) = \frac{d}{d\alpha} \log Ai'(\alpha) = \frac{Ai''(\alpha)}{Ai'(\alpha)} = \frac{\alpha Ai(\alpha)}{Ai'(\alpha)} \tag{9.1}$$

satisfy the differential equations

$$\frac{dy}{d\alpha} = \alpha - y^2(\alpha)$$

$$\frac{dz}{d\alpha} = \alpha - \alpha^2 z^2(\alpha) \tag{9.2}$$

We can then show that

$$-\frac{Ai'(\alpha)}{Ai(\alpha)} = -\sum_{n=o}^{\infty} A_n \frac{1}{\alpha^{(3n-1/2)}}$$

$$= \sqrt{\alpha} + \frac{1}{4}\frac{1}{\alpha} - \frac{5}{32}\frac{1}{\alpha^{5/2}} + \frac{15}{64}\frac{1}{\alpha^4} - \frac{1105}{2048}\frac{1}{\alpha^{11/2}}$$

$$+ \frac{1695}{1024}\frac{1}{\alpha^7} - \frac{414125}{65536}\frac{1}{\alpha^{17/2}} + \frac{59025}{2048}\frac{1}{\alpha^{10}}$$

$$- \frac{12820\ 31525}{8388608}\frac{1}{\alpha^{23/2}} + \frac{2421\ 83775}{262144}\frac{1}{\alpha^{13}} + \ldots \tag{9.3}$$

and

$$-\frac{\alpha\,\mathrm{Ai}(\alpha)}{\mathrm{Ai}'(\alpha)} = -\sum_{n=0}^{\infty} B_n \frac{1}{\alpha^{(3n-1/2)}}$$

$$= \sqrt{\alpha} - \frac{1}{4}\frac{1}{\alpha} + \frac{7}{32}\frac{1}{\alpha^{5/2}} - \frac{21}{64}\frac{1}{\alpha^{4}} + \frac{1463}{2048}\frac{1}{\alpha^{11/2}}$$

$$- \frac{2121}{1024}\frac{1}{\alpha^{7}} + \frac{495271}{65536}\frac{1}{\alpha^{17/2}} - \frac{136479}{4096}\frac{1}{\alpha^{10}}$$

$$+ \frac{14457\ 13003}{8388608}\frac{1}{\alpha^{23/2}} - \frac{268122561}{262144}\frac{1}{\alpha^{13}} + \ldots \qquad (9.4)$$

The Laplace transform inversion integral

$$\int_{c-i\infty}^{c+i\infty} \exp(x\alpha)\,\frac{1}{\alpha^{p+1}}\,d\alpha = \frac{2\pi i}{\Gamma(p+1)}\,x^{p} \qquad (9.5)$$

can then be used to show that

$$u(\xi) = -2\sqrt{\pi}\exp\left(-i\frac{\pi}{4}\right)\xi^{3/2}\sum_{n=0}^{\infty} A_n \frac{\left[\exp\left(-i\frac{\pi}{6}\right)\xi\right]^{\frac{3n-3}{2}}}{\Gamma\left(\frac{3n-1}{2}\right)}$$

$$= 1 - \frac{1}{4}\frac{\Gamma(-1/2)}{\Gamma(2)}\exp\left(-i\frac{\pi}{4}\right)\xi^{3/2} - \frac{5}{32}\frac{\Gamma(-1/2)}{\Gamma(5/2)}\exp\left(-i\frac{\pi}{2}\right)\xi^{3} + \ldots$$

$$v(\xi) = -\sqrt{\pi}\exp\left(-i\frac{\pi}{12}\right)\xi^{1/2}\sum_{n=0}^{\infty} B_n \frac{\left[\exp\left(-i\frac{\pi}{6}\right)\xi\right]^{\frac{3n-1}{2}}}{\Gamma\left(\frac{3n+1}{2}\right)}$$

$$= 1 - \frac{1}{4}\frac{\Gamma(1/2)}{\Gamma(2)}\exp\left(-i\frac{\pi}{4}\right)\xi^{3/2} + \frac{7}{32}\frac{\Gamma(1/2)}{\Gamma(7/2)}\exp\left(-i\frac{\pi}{2}\right)\xi^{3} + \ldots \qquad (9.6)$$

In Table 7 we list results for the first 22 values of A_n, B_n.

Table 7

VALUES OF A_n, B_n OCCURING IN ASYMPTOTIC EXPANSIONS OF LOGARITHMIC DERIVATIVES OF $Ai(\alpha)$, $Ai'(\alpha)$

n	A_n	B_n
0	- 1	- 1
1	- 0.25	+ 0.25
2	+ 0.15625	- 0.21875
3	- 0.234375	+ 0.328125
4	+ 0.53955 0781	- 0.714355468
5	- 1.65527 3437	+ 2.07128 9062
6	+ 6.31904 602	- 7.55723 571
7	- 28.82080 078	+ 33.32006 83
8	+ 152.83006 7	- 172.34241 9
9	- 923.85778 4	+ 1022.80640 0
10	+ 6271.454	- 6847.767
11	- 47242.09	+ 51038.51
12	$+ 3.910938 \times 10^{5}$	$- 4.190135 \times 10^{5}$
13	$- 3.529629 \times 10^{6}$	$+ 3.756370 \times 10^{6}$
14	$+ 3.449236 \times 10^{7}$	$- 3.650733 \times 10^{7}$
15	$- 3.62859 \times 10^{8}$	$+ 3.823037 \times 10^{8}$
16	$+ 4.088748 \times 10^{9}$	$- 4.291192 \times 10^{9}$
17	$- 4.913293 \times 10^{10}$	$+ 5.139436 \times 10^{10}$
18	$+ 6.271985 \times 10^{11}$	$- 6.541735 \times 10^{11}$
19	$- 8.476114 \times 10^{12}$	$+ 8.818285 \times 10^{12}$
20	$+ 1.208974 \times 10^{14}$	$- 1.254962 \times 10^{14}$
21	$- 1.814970 \times 10^{15}$	$+ 1.880248 \times 10^{15}$
22	$+ 2.860712 \times 10^{16}$	$- 2.958293 \times 10^{16}$

These representations, along with the residue series representations, permit one to evaluate $u(\xi)$, $v(\xi)$ for all values of ξ. However, another interesting representation for $u(\xi)$, $v(\xi)$ can also be obtained by means of the Euler-Maclaurin summation formula. Consider the case of $v(\xi)$, for example. If we use Olvers' (Ref. 35) relation

$$\frac{da_s'}{ds} = \frac{1}{a_s' \, Ai(a_s') Ai(a_s')}$$

we can write

$$v(\xi) = -2\sqrt{\pi}\, \exp\left(-i\,\frac{\pi}{12}\right)\sqrt{\xi} \sum_{s=1}^{\infty} \frac{1}{a_s'} \exp\left(\frac{\sqrt{3}-i}{2}\, a_s'\, \xi\right) = -2\sqrt{\pi}\, \exp\left(-i\,\frac{\pi}{6}\right)\sqrt{\xi}$$

$$\sum_{s=1}^{\infty} \exp\left(\frac{\sqrt{3}-i}{2}\, a_s'\, \xi\right)\left[Ai(a_s')\right]^2 \frac{da_s'}{ds}$$

$$= -2\sqrt{\pi}\, \exp\left(-i\,\frac{\pi}{12}\right)\sqrt{\xi}\left\{\sum_{s=1}^{N-1} \frac{1}{a_s'} \exp\left(\frac{\sqrt{3}-i}{2} a_s' \xi\right) + \sum_{s=N}^{\infty} \exp\left(\frac{\sqrt{3}-i}{2} a_s' \xi\right)\left[Ai(a_s')\right]^2 \frac{da_s'}{ds}\right\}$$

$$= -2\sqrt{\pi}\, \exp\left(-i\,\frac{\pi}{12}\right)\sqrt{\xi}\left\{\sum_{s=1}^{N-1} \frac{1}{a_s'} \exp\left(\frac{\sqrt{3}-i}{2} a_s' \xi\right) + \int_{a_N'}^{-\infty} \exp\left(\frac{\sqrt{3}-i}{2}\, x\xi\right)\left[Ai(x)\right]^2 dx\right.$$

$$\left. + \frac{1}{2a_N'} \exp\left(\frac{\sqrt{3}-i}{2}\, a_N'\, \xi\right) + R_M\left[\frac{1}{a_N'} \exp\left(\frac{\sqrt{3}-i}{2}\, a_s'\, \xi\right)\right]\right\} \tag{9.7}$$

where

$$R_M\left[f(N)\right] = -\frac{1}{12}\,\Delta f(N) + \frac{1}{24}\,\Delta^2 f(N) - \frac{19}{720}\,\Delta^3 f(N) + \ldots$$

$$= -\frac{1}{12}\,\frac{df}{dN} + \frac{1}{720}\,\frac{d^3 f}{dN^3} - \ldots \tag{9.8}$$

Let us now write

$$\int_{a'_N}^{-\infty} \exp\left(\frac{\sqrt{3}-i}{2} x\xi\right)\left[\mathrm{Ai}(x)\right]^2 dx = -\int_{-\infty}^{\infty} \exp\left(\frac{\sqrt{3}-i}{2} x\xi\right)\left[\mathrm{Ai}(x)\right]^2 dx + \int_{a'_N}^{\infty} \exp\left(\frac{\sqrt{3}-i}{2} x\xi\right)\left[\mathrm{Ai}(x)\right]^2 dx$$

$$= -\frac{\exp\left(i\frac{\pi}{12}\right)}{2\sqrt{\pi\xi}} \exp\left(-i\frac{\xi^3}{12}\right) + \int_{a'_N}^{\infty} \exp\left(\frac{\sqrt{3}-i}{2} x\xi\right)\left[\mathrm{Ai}(x)\right]^2 dx \tag{9.9}$$

Therefore, we write

$$v(\xi) = \exp\left(-i\frac{\xi^3}{12}\right) - 2\sqrt{\pi\xi}\, \exp\left(-i\frac{\pi}{12}\right)\left\{\sum_{s=1}^{N-1} \frac{1}{a'_s} \exp\left(\frac{\sqrt{3}-i}{2} a'_s \xi\right) + \frac{1}{2a'_N} \exp\left(\frac{\sqrt{3}-i}{2} a'_N \xi\right)\right.$$

$$\left. + \int_{a'_N}^{\infty} \exp\left(\frac{\sqrt{3}-i}{2} x\xi\right)\left[\mathrm{Ai}(x)\right]^2 dx + R_M\left[\frac{1}{a'_N}\exp\left(\frac{\sqrt{3}-i}{2} a'_N \xi\right)\right]\right\} \tag{9.10}$$

If now we use the result

$$\exp\left(\frac{\sqrt{3}-i}{2} x\xi\right) = \sum_{n=0}^{\infty} \exp\left(-i\, n\frac{\pi}{6}\right) x^n \frac{\xi^n}{n!}$$

we arrive at the formal result

$$v(\xi) = \exp\left(-i\frac{\xi^3}{12}\right) - 2\sqrt{\pi\xi}\, \exp\left(-i\frac{\pi}{12}\right) \sum_{n=0}^{\infty} \exp\left(-i\, n\frac{\pi}{6}\right)\frac{\xi^n}{n!}\left\{\sum_{s=1}^{N-1} (a'_s)^{n-1} + \frac{1}{2}(a'_N)^{n-1}\right.$$

$$\left. + \int_{a'_N}^{\infty} x^n \mathrm{Ai}(x)\mathrm{Ai}(x)dx + R_M\left[(a'_N)^{n-1}\right]\right\} \tag{9.11}$$

The integral

$$I(n) = \int_{a'_N}^{\infty} x^n \, Ai(x) \, Ai(x) \, dx \tag{9.12}$$

can be evaluated by studying the generating function

$$y(t) = \int_{a'_N}^{\infty} \exp(xt) \, Ai(x) \, Ai(x) \, dx = \sum_{n=o}^{\infty} I(n) \frac{t^n}{n!} \tag{9.13}$$

If we write

$$y(t) = Ai(a'_N) \, Ai(a'_N) \, h(t) \tag{9.14}$$

we find that

$$4 \, t \, h'(t) + (2 - t^3) \, h(t) = \left\{ - 2a'_N + t^2 \right\} \exp(a'_N t) \tag{9.15}$$

Since

$$y(o) = - a'_N \, Ai(a'_N) \, Ai(a'_N)$$

we have

$$h(o) = - a'_N \tag{9.16}$$

We can also show that

$$y'(o) = - \int_{a'_N}^{\infty} Ai'(x) \, Ai'(x) \, dx = - \frac{1}{3} \left[a'_N \, Ai(a'_N) \right]^2 \tag{9.17}$$

and hence

$$h'(o) = - \frac{1}{3} (a'_N)^2 \tag{9.18}$$

Since

$$y(t) = Ai(a_N') \, Ai(a_N') \, h(t) = \sum_{n=0}^{\infty} I(n) \frac{t^n}{n!} \tag{9.19}$$

we can readily determine $I(n)$ by using the differential equation satisfied by $h(t)$.

The Laplace transform inversion integral form is also useful in the case of the function

$$\hat{V}_0(x, q) = \frac{1}{\sqrt{\pi}} \int_{-\infty}^{\infty} \exp(ixt) \frac{w_1(t)}{w_1'(t) - q w_1(t)} dt \tag{9.20}$$

which can be expressed in the form of the residue series

$$\hat{V}_0(x, q) = 2\sqrt{\pi} i \sum_{s=1}^{\infty} \frac{1}{t_s - q^2} \exp(ixt_s) \tag{9.21}$$

where

$$w_1'(t_s) - q w_1(t_s) = 0$$

If we let

$$t_s = -\exp(i \tfrac{\pi}{3}) \, a_s$$

we can write

$$\hat{V}_0(x, q) = -2\sqrt{\pi} \exp\left(i \frac{\pi}{6}\right) \sum_{s=1}^{\infty} \frac{1}{a_s + \exp\left(-i \frac{\pi}{3}\right) q^2} \exp\left(\frac{\sqrt{3}-i}{2} a_s x\right)$$

$$= -2\pi \exp\left(i \frac{\pi}{6}\right) \sum_{s=1}^{\infty} \frac{1}{a_s - Q^2} \exp\left(\frac{\sqrt{3}-i}{2} a_s x\right) \tag{9.22}$$

where

$$Q = \exp\left(i\,\frac{\pi}{3}\right) q \tag{9.23}$$

If we write

$$\int_{c-i\infty}^{c+i\infty} \exp(z\alpha)\,\frac{Ai(\alpha)}{Ai'(\alpha) - Q\,Ai(\alpha)}\,d\alpha = 2\pi i \sum_{s=1}^{\infty} \frac{1}{\alpha_s - Q^2}\exp(z\alpha_s) \tag{9.24}$$

where

$$z = \frac{\sqrt{3}-i}{2}\,x = \exp\left(-i\,\frac{\pi}{6}\right) x \tag{9.25}$$

$$Ai'(\alpha_s) - Q\,Ai(\alpha_s) = 0 \tag{9.26}$$

we can write

$$\boxed{\hat{V}_0(x, q) = \frac{1}{\sqrt{\pi}}\exp\left(i\,\frac{2\pi}{3}\right)\int_{c-i\infty}^{c+i\infty} \exp(z\alpha)\,\frac{Ai(\alpha)}{Ai'(\alpha) - Q\,Ai(\alpha)}\,d\alpha} \tag{9.27}$$

From the property

$$\frac{Ai'(\alpha)}{Ai(\alpha)} \xrightarrow[\alpha \to \infty]{} -\sqrt{\alpha} \tag{9.28}$$

we are lead to consider the integral

$$W(x, q) = -\exp\left(i\,\frac{2\pi}{3}\right)\frac{1}{\sqrt{\pi}}\int_{c-i\infty}^{c+i\infty} \exp(z\alpha)\,\frac{1}{\sqrt{\alpha} + Q}\,d\alpha \tag{9.29}$$

This is a well-known integral in the theory of the Laplace transformation

$$\frac{1}{2\pi i}\int_{c-i\infty}^{c+i\infty} \exp(st)\,\frac{1}{\sqrt{s}+a}\,ds = \frac{1}{\sqrt{\pi t}} - a\exp(a^2 t)\,\mathrm{erfc}(a\sqrt{t})$$

$$= \frac{1}{\sqrt{\pi t}} - a\exp(a^2 t)\,\frac{2}{\sqrt{\pi}}\int_{a\sqrt{t}}^{\infty} \exp(-\lambda^2)\,d\lambda \tag{9.30}$$

Therefore, we write

$$W(x,\ q) = -\exp\left(i\frac{2\pi}{3}\right)(2\sqrt{\pi}\,i)\left\{\frac{1}{\sqrt{\pi z}} - Q\exp(Q^2 z)\,\frac{2}{\sqrt{\pi}}\int_{Q\sqrt{z}}^{\infty} \exp(-\lambda^2)\,d\lambda\right\} \tag{9.31}$$

where

$$Q = \exp\left(i\frac{\pi}{3}\right) q \quad , \quad z = \exp\left(-i\frac{\pi}{6}\right) x$$

Let

$$\sigma = \exp\left(-i\frac{\pi}{4}\right) q\sqrt{x}$$

$$\rho = \sigma^2 = \exp\left(-i\frac{\pi}{2}\right) q^2 x \tag{9.32}$$

and observe that

$$Q\sqrt{z} = \exp\left(i\frac{\pi}{3}\right) q\exp\left(-i\frac{\pi}{12}\right) x = \exp\left(i\frac{\pi}{4}\right) q\sqrt{x} = \exp\left(i\frac{\pi}{2}\right)\sigma = i\sigma$$

$$Q^2 z = -\sigma^2$$

and hence

$$W(x,\ q) = \frac{2}{\sqrt{x}}\exp\left(i\frac{\pi}{4}\right)\left\{1 - 2i\sigma\exp(-\sigma^2)\int_{i\sigma}^{\infty} \exp(-\lambda^2)\,d\lambda\right\} \tag{9.33}$$

Now change variables in the integral by writing

$$t = -i\lambda$$

so that

$$\hat{V}_0(x, q) \approx W(x, q) = \frac{2}{\sqrt{x}} \exp\left(i\frac{\pi}{4}\right) \left\{ 1 + 2\sigma \exp(-\sigma^2) \int_{\sigma}^{i\infty} \exp(t^2)\, dt \right\}$$

$$= \frac{2}{\sqrt{x}} \exp\left(i\frac{\pi}{4}\right) \left\{ 1 + 2\sqrt{\rho} \exp(-\rho) \int_{\sqrt{\rho}}^{i\infty} \exp(t^2)\, dt \right\} \qquad (9.34)$$

This is just the well-known Weyl-van der Pol formula.

It is not possible to obtain results for $f(\xi)$, $g(\xi)$, $\hat{p}(\xi)$, $\hat{q}(\xi)$ in such a direct manner as for $u(\xi)$, $v(\xi)$ since the integrands do not behave like a power of α as α tends to infinity along the real axis.

Section 10
ASYMPTOTIC EXPANSIONS FOR THE INTEGRALS f, g, $\hat{p}$, $\hat{q}$,

The integrals

$$f(\xi) = \frac{1}{\pi}\int_{-\infty}^{\infty} \frac{\exp(i\xi t)}{Bi(t) + iAi(t)}\, dt \qquad g(\xi) = \frac{1}{\pi}\int_{-\infty}^{\infty} \frac{\exp(i\xi t)}{Bi'(t) + iAi'(t)}\, dt$$

$$\hat{p}(\xi) = \frac{1}{\sqrt{\pi}}\int_{-\infty}^{\infty} \exp(i\xi t)\frac{Ai(t)}{Bi(t) + iAi(t)}\, dt \quad , \quad \hat{q}(\xi) = \frac{1}{\sqrt{\pi}}\int_{-\infty}^{\infty} \exp(i\xi t)\frac{Ai'(t)}{Bi'(t) + iAi'(t)}\, dt \tag{10.1}$$

are known to have asymptotic expansion of the form

$$f(\xi) = 2i\xi \exp\left(-i\frac{\xi^3}{3}\right)\left\{1 - \frac{i}{4\xi^3} + \ldots\right\}$$

$$g(\xi) = 2\exp\left(-i\frac{\xi^3}{3}\right)\left\{1 + \frac{i}{4\xi^3} + \ldots\right\}$$

$$\hat{p}(\xi) = \frac{\sqrt{-\xi}}{2}\exp\left[-i\left(\frac{\xi^3}{12} + \frac{\pi}{4}\right)\right]\left\{1 - i\frac{2}{\xi^3} + \ldots\right\}$$

$$\hat{q}(\xi) = -\frac{\sqrt{-\xi}}{2}\exp\left[-i\left(\frac{\xi^3}{12} + \frac{\pi}{4}\right)\right]\left\{1 + i\frac{2}{\xi^3} + \ldots\right\} \tag{10.2}$$

valid for $\xi \to -\infty$. In this section we extend these results to include the terms in ξ^{-30}.

Let us begin by using the properties

$$\frac{1}{\pi}\frac{1}{Bi(t)+i\,Ai(t)} = -2Ai'(t) + \left\{\frac{Bi'(t)+i\,Ai'(t)}{Bi(t)+i\,Ai(t)} + \frac{Ai'(t)}{Ai(t)}\right\} Ai(t)$$

$$\frac{1}{\pi}\frac{1}{Bi'(t)+i\,Ai'(t)} = 2\,Ai(t) - \left\{\frac{Bi(t)+i\,Ai(t)}{Bi'(t)+i\,Ai'(t)} + \frac{Ai(t)}{Ai'(t)}\right\} Ai'(t)$$

$$\frac{Bi'(t)+i\,Ai'(t)}{Bi(t)+i\,Ai(t)} + \frac{Ai'(t)}{Ai(t)} \xrightarrow[|t|\to\infty]{} -\frac{1}{2t} - \frac{15}{32}\frac{1}{t^4} - \frac{1695}{512}\frac{1}{t^7} - \frac{59025}{1024}\frac{1}{t^{10}} - \frac{2421\,83775}{131072}\frac{1}{t^{13}} - \cdots \tag{10.3}$$

$$\frac{Bi(t)+i\,Ai(t)}{Bi'(t)+i\,Ai'(t)} + \frac{Ai(t)}{Ai'(t)} \xrightarrow[|t|\to\infty]{} \frac{1}{2t^2} + \frac{21}{32}\frac{1}{t^5} + \frac{2121}{512}\frac{1}{t^8} + \frac{136479}{2048}\frac{1}{t^{11}} + \frac{2681\,22561}{131072}\frac{1}{t^{14}} + \cdots \tag{10.4}$$

and

$$\frac{1}{\sqrt{\pi}}\frac{1}{Bi(t)+i\,Ai(t)} \xrightarrow[t\to-\infty]{} i\sqrt{\pi}\left[Bi'(t)-i\,Ai'(t)\right] - i\,\frac{1}{4}\left\{\frac{1}{t} + \frac{15}{16}\frac{1}{t^4} + \frac{1695}{256}\frac{1}{t^7} + \frac{59025}{512}\frac{1}{t^{10}} + \frac{2421\,83775}{65536}\frac{1}{t^{13}} + \cdots\right\}\sqrt{\pi}\left[Bi(t)-i\,Ai(t)\right] \tag{10.5}$$

$$\frac{1}{\sqrt{\pi}}\frac{1}{Bi'(t)+i\,Ai'(t)} \xrightarrow[t\to-\infty]{} i\sqrt{\pi}\left[Bi(t)-i\,Ai(t)\right] - \frac{i}{4}\left\{\frac{1}{t^2} + \frac{21}{16}\frac{1}{t^5} + \frac{2121}{256}\frac{1}{t^8} + \frac{136479}{1024}\frac{1}{t^{11}} + \frac{2681\,22561}{65536}\frac{1}{t^{14}} + \cdots\right\}\sqrt{\pi}\left[Bi'(t)-i\,Ai'(t)\right] \tag{10.6}$$

to obtain the formal results

$$f(\xi) = -2J_o(\xi) - \frac{1}{2} I_1(\xi) - \frac{15}{32} I_4(\xi) - \frac{1695}{512} I_7(\xi) - \frac{59025}{1024} I_{10}(\xi) - \frac{2421\,83775}{131072} I_{13}(\xi) + \ldots$$

$$g(\xi) = 2I_o(\xi) - \frac{1}{2} J_2(\xi) - \frac{21}{32} J_5(\xi) - \frac{2121}{512} J_8(\xi) - \frac{136479}{2048} J_{11}(\xi) - \frac{2681\,22561}{131072} J_{14}(\xi) + \ldots$$

$$\hat{p}(\xi) = \frac{\sqrt{-\xi}}{2} \exp\left[-i\left(\frac{\xi^3}{12} + \frac{\pi}{4}\right) \right] - \frac{i}{4} \left\{ K_1(\xi) + \frac{15}{16} K_4(\xi) + \frac{1695}{256} K_7(\xi) + \frac{59025}{512} K_{10}(\xi) + \frac{2421\,83775}{65536} K_{13}(\xi) + \ldots \right\}$$

$$\hat{q}(\xi) = -\frac{\sqrt{-\xi}}{2} \exp\left[-i\left(\frac{\xi^3}{12} + \frac{\pi}{4}\right) \right] - \frac{i}{4} \left\{ L_2(\xi) + \frac{21}{16} L_5(\xi) + \frac{2121}{256} L_8(\xi) + \frac{136479}{1024} L_{11}(\xi) + \frac{2681\,22561}{65536} L_{14}(\xi) + \ldots \right\}$$

where

$$I_n(\xi) = \int_{-\infty}^{\infty} \exp(i\xi t) \frac{1}{t^n} Ai(t)\, dt \quad , \quad J_n(\xi) = \int_{-\infty}^{\infty} \exp(i\xi t) \frac{1}{t^n} Ai'(t)\, dt$$

and

$$K_n(\xi) = \sqrt{\pi} \int_{-\infty}^{\infty} \exp(i\xi t)\, t^{-n}\, Ai(t) \left[Bi(t) - i\, Ai(t) \right] dt$$

$$L_n(\xi) = \sqrt{\pi} \int_{-\infty}^{\infty} \exp(i\xi t)\, t^{-n}\, Ai'(t) \left[Bi'(t) - i\, Ai'(t) \right] dt$$

The leading terms come from the integrals

$$J_o(\xi) = \int_{-\infty}^{\infty} \exp(i\xi t)\, Ai'(t)dt = -i\xi \exp\left(-i\frac{\xi^3}{3}\right) \tag{10.7}$$

$$I_o(\xi) = \int_{-\infty}^{\infty} \exp(i\xi t)\, Ai(t)\, dt = \exp\left(-i\frac{\xi^3}{3}\right) \tag{10.8}$$

$$\sqrt{\pi} \int_{-\infty}^{\infty} \exp(i\xi t)\, Ai(t) \left[Bi'(t) - i\, Ai'(t) \right] dt = \frac{i}{2} \frac{1}{\sqrt{-\xi}} \exp\left[-i\left(\frac{\xi^3}{12} + \frac{\pi}{4}\right)\right] \tag{10.9}$$

$$\sqrt{\pi} \int_{-\infty}^{\infty} \exp(i\xi t)\, Ai'(t) \left[Bi(t) - i\, Ai(t) \right] dt = -\frac{i}{2} \frac{1}{\sqrt{-\xi}} \exp\left[-i\left(\frac{\xi^3}{12} + \frac{\pi}{4}\right)\right] \tag{10.10}$$

We also know the integrals

$$K_o(\xi) = \sqrt{\pi} \int_{-\infty}^{\infty} \exp(i\xi t)\, Ai(t) \left[Bi(t) - i\, Ai(t) \right] dt = \frac{1}{\sqrt{-\xi}} \exp\left[-i\left(\frac{\xi^3}{12} + \frac{\pi}{4}\right)\right]$$

$$L_o(\xi) = \sqrt{\pi} \int_{-\infty}^{\infty} \exp(i\xi t) Ai'(t) \left[Bi'(t) - i\, Ai'(t) \right] dt = -\frac{(-\xi)^{\frac{3}{2}}}{4} \left\{ 1 + \frac{2i}{\xi^3} \right\} \exp\left[-i\left(\frac{\xi^3}{12} + \frac{\pi}{4}\right)\right]$$

The integral

$$I_n(\xi) = \int_{-\infty}^{\infty} t^{-n} \exp(i\xi t)\, Ai(t)\, dt$$

can be expressed in the form

$$I_n(\xi) = (-1)^n \frac{1}{\xi^{2n}} \exp\left(-i\frac{\xi^3}{3}\right) \left\{ 1 + i\frac{A_1^n}{\xi^3} - \frac{A_2^n}{\xi^6} - i\frac{A_3^n}{\xi^9} + \frac{A_4^n}{\xi^{12}} + i\frac{A_5^n}{\xi^{15}} + \ldots \right\}$$

Since

$$\frac{d\,I_{n+1}(\xi)}{d\xi} = i\,I_n(\xi)$$

and

$$\frac{d\,I_{n+1}(\xi)}{d\xi} = (-1)^n \frac{i}{\xi^{2n}} \exp\left(-i\frac{\xi^3}{3}\right)\left\{1 + i\frac{A_1^{n+1} - (2n+2)}{\xi^3} - \frac{A_2^{n+1} - (2n+5)\,A_1^{n+1}}{\xi^6} - i\frac{A_3^{n+1} - (2n+8)A_2^{n+1}}{\xi^9} + \ldots\right\}$$

$$= (-1)^n \frac{i}{\xi^{2n}} \exp\left(-i\frac{\xi^3}{3}\right)\left\{1 + i\frac{A_1^n}{\xi^3} - \frac{A_2^n}{\xi^6} - i\frac{A_3^n}{\xi^9} + \ldots\right\}$$

we have the recursion relations

$$A_1^{n+1} = A_1^n + (2n+2)$$

$$A_2^{n+1} = A_2^n + (2n+5)\,A_1^{n+1}$$

$$A_3^{n+1} = A_3^n + (2n+8)\,A_2^{n+1}$$

$$A_4^{n+1} = A_4^n + (2n+11)\,A_3^{n+1}$$

$$A_5^{n+1} = A_5^n + (2n+14)\,A_4^{n+1}$$

with the initial condition

$$A_r^o = 0 \qquad r \neq 0$$

$$A_o^n = 1$$

The integral

$$J_n(\xi) = \int_{-\infty}^{\infty} \exp(i\xi t)\ \frac{1}{t^n}\ Ai'(t)dt = -i\xi I_{n-1}(\xi) + n I_{n+1}(\xi)$$

can be expressed in the form

$$J_n(\xi) = (-1)^{n+1} \frac{i}{\xi^{2n-1}} \exp\left(-i\frac{\xi^3}{3}\right)\left\{1 + i\frac{B_1^n}{\xi^3} - \frac{B_2^n}{\xi^6} - i\frac{B_3^n}{\xi^9} + \frac{B_4^n}{\xi^{12}} + \ldots\right\}$$

Since

$$\frac{d\,J_{n+1}(\xi)}{d\xi} = i\,J_n(\xi)$$

and

$$\frac{d\,J_{n+1}(\xi)}{d\xi} = (-1)^n \frac{1}{\xi^{2n-1}} \exp\left(-i\frac{\xi^3}{3}\right)\left\{1 + i\frac{B_1^{n+1} - (2n+1)}{\xi^3} - \frac{B_2^{n+1} - (2n+4)B_1^{n+1}}{\xi^6} - i\frac{B_3^{n+1} - (2n+7)\,B_2^{n+1}}{\xi^9} + \ldots\right\}$$

$$= (-1)^n \frac{1}{\xi^{2n-1}} \exp\left(-i\frac{\xi^3}{3}\right)\left\{1 + i\frac{B_1^n}{\xi^3} - \frac{B_2^n}{\xi^6} - i\frac{B_3^n}{\xi^9} + \ldots\right\}$$

we have the recursion relations

$$B_m^{n+1} = B_m^n + (2n + 3m - 2)\ B_{m-1}^{n+1}$$

with the initial conditions

$$B_r^o = 0 \qquad r \neq 0$$

$$B_o^n = 1$$

Let us seek representations for $K_n(\xi)$ and $L_n(\xi)$ of the form

$$K_n(\xi) = \frac{(-1)^n 4^n}{(-\xi)^{2n+1/2}} \exp\left[-i\left(\frac{\xi^3}{12} + \frac{\pi}{4}\right)\right]\left\{1 + i\frac{C_1^n}{\xi^3} - \frac{C_2^n}{\xi^6} - i\frac{C_3^n}{\xi^9} + \frac{C_4^n}{\xi^{12}} + \dots\right\}$$

$$L_n(\xi) = \frac{(-1)^{n+1} 4^{n-1}}{(-\xi)^{2n-3/2}} \exp\left[-i\left(\frac{\xi^3}{12} + \frac{\pi}{4}\right)\right]\left\{1 + i\frac{D_1^n}{\xi^3} - \frac{D_2^n}{\xi^6} - i\frac{D_3^n}{\xi^9} + \frac{D_4^n}{\xi^{12}} + \dots\right\}$$

We observe that

$$\frac{dK_{n+1}}{d\xi} = i K_n \qquad \frac{dL_{n+1}}{d\xi} = i L_n$$

We find that

$$\frac{dK_{n+1}}{d\xi} = i\frac{(-1)^n 4^n}{(-\xi)^{2n+1/2}} \exp\left[-i\left(\frac{\xi^3}{12} + \frac{\pi}{4}\right)\right]\left\{1 + i\frac{C_1^{n+1} - 4\left(2n+\frac{5}{2}\right)}{\xi^3} - \frac{C_2^{n+1} - 4\left(2n+\frac{11}{2}\right)C_1^{n+1}}{\xi^6} - i\frac{C_3^{n+1} - 4\left(2n+\frac{17}{2}\right)C_2^{n+1}}{\xi^9} + \dots\right\}$$

$$\frac{dL_{n+1}}{d\xi} = i\frac{(-1)^{n+1} 4^{n-1}}{(-\xi)^{2n-3/2}} \exp\left[-i\left(\frac{\xi^3}{12} + \frac{\pi}{4}\right)\right]\left\{1 + i\frac{D_1^{n+1} - 4\left(2n+\frac{1}{2}\right)}{\xi^3} - \frac{D_2^{n+1} - 4\left(2n+\frac{7}{2}\right)D_1^{n+1}}{\xi^6} - i\frac{D_3^{n+1} - 4\left(2n+\frac{13}{2}\right)D_2^{n+1}}{\xi^9} + \dots\right\}$$

Therefore, we have the recursion relations

$$C_1^{n+1} = C_1^n + (8n + 10) \qquad D_1^{n+1} = D_1^n + (8n + 2)$$

$$C_2^{n+1} = C_2^n + (8n + 22)\, C_1^{n+1} \qquad D_2^{n+1} = D_2^n + (8n + 14) D_1^{n+1}$$

$$C_3^{n+1} = C_3^n + (8n + 34) C_2^{n+1} \qquad D_3^{n+1} = D_3^n + (8n + 26) D_2^{n+1}$$

with the initial values

$$C_r^o = 0 \quad , \quad r \neq 0 \qquad D_r^o = 0 \quad , \quad r > 1$$

$$C_o^n = 1 \qquad D_o^n = 1 \quad , \quad D_1^o = 2$$

In Tables 8, 9, 10, 11 we give values of A_r^n, B_r^n, C_r^n, D_r^n for $n + r < 12$.

Table 8

TABLE OF A_r^n

r \ n	0	1	2	3	4	5	6	7	8	9	10	11	12	13	14	15
0	1	1	1	1	1	1	1	1	1	1	1	1	1	1	1	1
1	0	2	6	12	20	30	42	56	72	90	110	132	156	182	210	
2	0	10	52	160	380	770	1400	2352	3720	5610	8140	11440	15652			
3	0	80	600	2520	7840	20160	45360	92400	174240	308880	520520					
4	0	880	8680	46480	179760	562500	1515360	3640560	7996560							
5	0	12320	151200	987840	4583040	16964640	53333280	147987840								
6	0	209440	3082240	23826880	129236800	553352800										
7	0	4188800	71998030	643843200	4004000000											
8	0	96342400	1896294400													
9	0	2504902400														
10	0															

Table 9

TABLE OF B_n^r

r \ n	0	1	2	3	4	5	6	7	8	9	10	11	12	13	14	15
0	1	1	1	1	1	1	1	1	1	1	1	1	1	1	1	1
1	0	1	4	9	16	25	36	49	64	81	100	121	144	169	196	
2	0	4	28	100	260	560	1064	1848	3000	4620	6820	9724	13468			
3	0	28	280	1380	4760	13160	31248	66360	129360	235620	406120	668668				
4	0	280	3640	22960	99120	336000	960960	2420880	5525520							
5	0	3640	58240	448360	2331840	9387840	31489920	92011920	241200960							
6	0	58240	1106560	10077760	61378240	286686400	1305424210									
7	0	1106560	24344320	256132800	1790588800	9531121600										
8	0	24344320	608608000	7268060800												
9	0	608608000	17041024000													
10	0															

Table 10

TABLE OF C_r^n

r \ n	0	1	2	3	4	5
0	1	1	1	1	1	1
1	0	10	28	54	88	130
2	0	220	1060	3112	7160	14180
3	0	7480	52000	207600	622880	1558760
4	0	344080	3152080	16023280	59624880	181208160
5	0	19956640	227993920	1413716640	6302956800	22611691200
6	0	1396964800	19180490560	140760121600	733238060800	3039630563200
7	0	114551113600	1840795264000	15635287180800	93358521625600	346517884204800
8	0	10767804678400	198528921606400	1918410511494400		
9	0	1141387295910400	23773684359040000			
10	0					

r \ n	0	6	7	8	9	10	11	12	13	14	15
0	1	1	1	1	1	1	1	1	1	1	1
1	0	180	238	304	378	460	550	648	754	868	
2	0	25340	42000	107712	140220	183460	239560	310840			
3	0	3433920	6877920	16572000	30313560	49760320					
4	0	476525280	1123049760	2813393760	6147885360						
5	0	69311168640	188354443200								
6	0	10663859113600									

Table 11

TABLE OF D_r^n

r \ n	0	1	2	3	4	5	6	7
0	1	1	1	1	1	1	1	1
1	2	4	14	32	58	92	134	184
2	0	56	364	1324	3528	7760	14996	26404
3	0	1456	13832	69440	245840	695920	1685656	3639552
4	0	55328	691600	4441360	19683440	68397840	199879008	512880480
5	0	2766400	42879200	336008960	1792583520	7401206400	25390317120	75652604160
6	0	171516800	3173030800	29381759680	183543942400	879257344000	3926095398400	12247881856000
7	0	12692243200	272883228800	2917241660000	20904547955200	114105826419200		
8	0	1091532915200	26742558422400					
9	0	106970225689600	2941681206464000					
10	0							

r \ n	0	8	9	10	11	12	13	14	15	16
0	1	1	1	1	1	1	1	1	1	1
1	2	242	308	382	464	554	652	758	872	994
2	0	43344	67368	100220	143836	200344	272064	361508	471380	133196
3	0	7193760	13256880	23078440	38325056	61164272	94356080			
4	0	1189093920	2541295680	5079924080	9602280688					
5	0	201696559680	491404267200	1111155004960						
6	0	36048075898240	97965013565440							

With these results we can write

$$f(\xi) = \frac{1}{\pi}\int_{-\infty}^{\infty} \frac{\exp(i\xi t)}{Bi(t) + iAi(t)}\, dt = 2i\xi \exp\left(-i\frac{\xi^3}{3}\right) \Bigg\{ 1 - \frac{i}{4}\frac{1}{\xi^3}\Bigg[1 + i\frac{2}{\xi^3} - \frac{10}{\xi^6} - i\frac{80}{\xi^9} + \frac{880}{\xi^{12}}$$

$$+ i\frac{12320}{\xi^{15}} - \frac{209440}{\xi^{18}} - i\frac{4188800}{\xi^{21}} + \frac{96342400}{\xi^{24}} + i\frac{2504902400}{\xi^{27}} - \dots \Bigg] + i\frac{15}{64}\frac{1}{\xi^9}$$

$$\Bigg[1 + i\frac{20}{\xi^3} - \frac{380}{\xi^6} - i\frac{7840}{\xi^9} + \frac{179760}{\xi^{12}} + i\frac{4583[illegible]0}{\xi^{15}} - \frac{129236800}{\xi^{18}} - i\frac{4004000000}{\xi^{21}} + \dots \Bigg]$$

$$- i\frac{1695}{1024}\frac{1}{\xi^{15}}\Bigg[1 + i\frac{56}{\xi^3} - \frac{2352}{\xi^6} - i\frac{92400}{\xi^9} + \frac{3640560}{\xi^{12}} + i\frac{147987840}{\xi^{15}} - \dots \Bigg]$$

$$+ i\frac{59025}{2048}\frac{1}{\xi^{21}}\Bigg[1 + i\frac{110}{\xi^3} - \frac{8140}{\xi^6} - i\frac{520520}{\xi^9} + \dots \Bigg]$$

$$- i\frac{2421\,83775}{262144}\frac{1}{\xi^{27}}\Bigg[1 + i\frac{182}{\xi^3} + \dots \Bigg] + \dots \Bigg\}$$

or

$$\boxed{\begin{aligned} f(\xi) = 2i\xi \exp\left(-i\frac{\xi^3}{3}\right) \Bigg\{ & 1 - \frac{i}{4\xi^3} + \frac{1}{2\xi^6} + i\frac{175}{64}\frac{1}{\xi^9} - \frac{395}{16}\frac{1}{\xi^{12}} - i\frac{318175}{1024}\frac{1}{\xi^{15}} \\ & + \frac{641305}{128}\frac{1}{\xi^{18}} + i\frac{2015\,50385}{2048}\frac{1}{\xi^{21}} - \frac{23321\,26775}{1024}\frac{1}{\xi^{24}} \\ & - i\frac{1589\,56578\,25375}{262144}\frac{1}{\xi^{27}} + \frac{23917\,93186\,85125}{131072}\frac{1}{\xi^{30}} + \dots \Bigg\} \end{aligned}}$$

(10.11)

For $g(\xi)$ we obtain

$$g(\xi) = \frac{1}{\pi}\int_{-\infty}^{\infty} \frac{\exp(i\xi t)}{Bi'(t) + i\,Ai'(t)}\,dt = 2\exp\left(-i\,\frac{\xi^3}{4}\right)\Bigg\{1 + i\,\frac{1}{4\xi^3}\Bigg[1 + i\,\frac{4}{\xi^3} - \frac{28}{\xi^6} - i\,\frac{280}{\xi^9}$$

$$+ \frac{3640}{\xi^{12}} + i\,\frac{58240}{\xi^{15}} - \frac{11\,06560}{\xi^{18}} - i\,\frac{243\,44320}{\xi^{21}} + \frac{6086\,08000}{\xi^{24}} + i\,\frac{170410\,24000}{\xi^{27}} + \ldots\Bigg]$$

$$- i\,\frac{21}{64\,\xi^9}\Bigg[1 + i\,\frac{25}{\xi^3} - \frac{560}{\xi^6} - i\,\frac{13160}{\xi^9} + \frac{336000}{\xi^{12}} + i\,\frac{9387840}{\xi^{15}} - \frac{2866\,86400}{\xi^{18}}$$

$$- i\,\frac{95311\,21600}{\xi^{21}} + \ldots\Bigg] + i\,\frac{2121}{1024\,\xi^{15}}\Bigg[1 + i\,\frac{64}{\xi^3} - \frac{3000}{\xi^6} - i\,\frac{129360}{\xi^9} + \frac{5525520}{\xi^{12}}$$

$$+ i\,\frac{2412\,00960}{\xi^{15}} + \ldots\Bigg] - i\,\frac{136479}{4096\,\xi^{21}}\Bigg[1 + i\,\frac{121}{\xi^3} - \frac{9724}{\xi^6} - i\,\frac{668668}{\xi^9} + \ldots\Bigg]$$

$$+ i\,\frac{2681\,22561}{262144\,\xi^{27}}\Bigg[1 + i\,\frac{196}{\xi^3} + \ldots\Bigg] + \ldots\Bigg\}$$

or

$$\boxed{\begin{aligned} g(\xi) = 2\exp\left(-i\,\frac{\xi^3}{3}\right)\Bigg\{&1 + i\,\frac{1}{4\xi^3} - \frac{1}{\xi^6} - i\,\frac{469}{64}\,\frac{1}{\xi^9} + \frac{5005}{64}\,\frac{1}{\xi^{12}} + i\,\frac{11\,22121}{1024}\,\frac{1}{\xi^{15}} \\ &- \frac{24\,33368}{128}\,\frac{1}{\xi^{18}} - i\,\frac{16102\,89919}{4096}\,\frac{1}{\xi^{21}} + \frac{3\,86598\,44839}{4096}\,\frac{1}{\xi^{24}} \\ &+ i\,\frac{6763\,07799\,35425}{262144}\,\frac{1}{\xi^{27}} - \frac{51837\,22434\,61681}{65536}\,\frac{1}{\xi^{30}} + \ldots\Bigg\} \end{aligned}}$$

(10.12)

By observing that

$$K_1(\xi) = + \frac{4\sqrt{-\xi}}{\xi^3} \exp\left[-i\left(\frac{\xi^3}{12} + \frac{\pi}{4}\right)\right]\left\{1 + i\frac{10}{\xi^3} - \frac{220}{\xi^6} - i\frac{7480}{\xi^9} + \ldots\right\}$$

$$K_4(\xi) = - \frac{256\sqrt{-\xi}}{\xi^9} \exp\left[-i\left(\frac{\xi^3}{12} + \frac{\pi}{4}\right)\right]\left\{1 + i\frac{88}{\xi^3} + \ldots\right\}$$

$$K_7(\xi) = + \frac{16384\sqrt{-\xi}}{\xi^{15}} \exp\left[-i\left(\frac{\xi^3}{12} + \frac{\pi}{4}\right)\right]\left\{1 + i\frac{238}{\xi^3} + \ldots\right\}$$

$$K_{10}(\xi) = - \frac{1048576\sqrt{-\xi}}{\xi^{21}} \exp\left[-i\left(\frac{\xi^3}{12} + \frac{\pi}{4}\right)\right]\left\{1 + i\frac{460}{\xi^3} + \ldots\right\}$$

$$K_{13}(\xi) = \frac{671\ 08864\sqrt{-\xi}}{\xi^{27}} \exp\left[-i\left(\frac{\xi^3}{12} + \frac{\pi}{4}\right)\right]\left\{1 + i\frac{754}{\xi^3} + \ldots\right\}$$

we find that

$$\hat{p}(\xi) = \frac{\sqrt{-\xi}}{2} \exp\left[-i\left(\frac{\xi^3}{12} + \frac{\pi}{4}\right)\right]\left\{1 - i\frac{2}{\xi^3}\left[1 + i\frac{10}{\xi^3} - \frac{220}{\xi^6} - i\frac{7480}{\xi^9} + \ldots\right]\right.$$

$$+ i\frac{15}{2}\frac{1}{16}\frac{256}{\xi^9}\left[1 + i\frac{88}{\xi^3} - \ldots\right] - i\frac{1695}{2}\frac{1}{256}\frac{16384}{\xi^{15}}\left[1 + i\frac{238}{\xi^3} + \ldots\right]$$

$$+ i\frac{59025}{2}\frac{1}{512}\frac{1048576}{\xi^{21}}\left[1 + i\frac{460}{\xi^3} + \ldots\right]$$

$$\left. - i\frac{12109\ 18875}{2}\frac{1}{32768}\frac{671\ 08864}{\xi^{27}}\left[1 + i\frac{754}{\xi^3} + \ldots\right] + \ldots\right\}$$

or

$$\hat{p}(\xi) = \frac{\sqrt{-\xi}}{2} \exp\left[-i\left(\frac{\xi^3}{12} + \frac{\pi}{4}\right)\right] \left\{ 1 - i\frac{2}{\xi^3}\left[1 + i\frac{10}{\xi^3} - \frac{220}{\xi^6} - i\frac{7480}{\xi^9} + \frac{3\,44080}{\xi^{12}} \right.\right.$$

$$+ i\frac{199\,56640}{\xi^{15}} - \frac{13969\,64800}{\xi^{18}} - i\frac{11\,45511\,13600}{\xi^{21}} + \frac{1076\,78046\,78400}{\xi^{24}}$$

$$\left. + i\frac{1\,14138\,72959\,10400}{\xi^{27}} - \ldots \right] + i\frac{120}{\xi^9}\left[1 + i\frac{88}{\xi^3} - \frac{7160}{\xi^6} - i\frac{622880}{\xi^9} \right.$$

$$\left. + \frac{596\,24880}{\xi^{12}} + i\frac{63029\,56800}{\xi^{15}} - \frac{73\,32380\,60800}{\xi^{18}} - i\frac{9335\,85216\,25600}{\xi^{21}} + \ldots \right]$$

$$- i\frac{54240}{\xi^{15}}\left[1 + i\frac{238}{\xi^3} - \frac{42000}{\xi^6} - i\frac{6877920}{\xi^9} + \frac{11230\,49760}{\xi^{12}} \right.$$

$$\left. + i\frac{18\,83544\,43200}{\xi^{15}} - \ldots \right] + i\frac{604\,41600}{\xi^{21}}\left[1 + i\frac{460}{\xi^3} - \frac{183460}{\xi^6} \right.$$

$$\left.\left. - i\frac{497\,60320}{\xi^9} + \ldots \right] - i\frac{123\,99809\,28000}{\xi^{27}}\left[1 + i\frac{754}{\xi^3} + \ldots \right] + \ldots \right\}$$

or

$$\boxed{\begin{aligned}\hat{p}(\xi) = \frac{\sqrt{-\xi}}{2}\exp\left[-i\left(\frac{\xi^3}{12}+\frac{\pi}{4}\right)\right]\Bigg\{1 - i\frac{2}{\xi^3} + \frac{20}{\xi^6} + i\frac{560}{\xi^9} - \frac{25520}{\xi^{12}} - i\frac{16\ 01600}{\xi^{15}} \\ + \frac{1115\ 68000}{\xi^{18}} + i\frac{1\ 22874\ 36800}{\xi^{21}} - \frac{138\ 63185\ 60000}{\xi^{24}} - i\frac{18276\ 69924\ 99200}{\xi^{27}} \\ + \frac{27\ 64468\ 11630\ 84800}{\xi^{30}} + \ldots\Bigg\}\end{aligned}}$$

(10.13)

By observing that

$$L_2(\xi) = \frac{4\sqrt{-\xi}}{\xi^3}\exp\left[-i\left(\frac{\xi^3}{12}+\frac{\pi}{4}\right)\right]\left\{1 + i\frac{14}{\xi^3} + \ldots\right\}$$

$$L_5(\xi) = -\frac{256\sqrt{-\xi}}{\xi^9}\exp\left[-i\left(\frac{\xi^3}{12}+\frac{\pi}{4}\right)\right]\left\{1 + i\frac{92}{\xi^3} + \ldots\right\}$$

$$L_8(\xi) = \frac{16384\sqrt{-\xi}}{\xi^{15}}\exp\left[-i\left(\frac{\xi^3}{12}+\frac{\pi}{4}\right)\right]\left\{1 + i\frac{242}{\xi^3} + \ldots\right\}$$

$$L_{11}(\xi) = -\frac{1048576\sqrt{-\xi}}{\xi^{21}}\exp\left[-i\left(\frac{\xi^3}{12}+\frac{\pi}{4}\right)\right]\left\{1 + i\frac{464}{\xi^3} + \ldots\right\}$$

$$L_{14}(\xi) = \frac{671\ 08864\sqrt{-\xi}}{\xi^{27}}\exp\left[-i\left(\frac{\xi^3}{12}+\frac{\pi}{4}\right)\right]\left\{1 + i\frac{758}{\xi^3} + \ldots\right\}$$

we find that

$$\hat{q}(\xi) = -\frac{\sqrt{-\xi}}{2}\exp\left[-i\left(\frac{\xi^3}{12}+\frac{\pi}{4}\right)\right]\left\{1 + i\frac{2}{\xi^3}\left[1 + i\frac{14}{\xi^3} - \frac{364}{\xi^6} - i\frac{13832}{\xi^9} + \ldots\right]\right.$$

$$-i\frac{21}{2}\frac{1}{16}\frac{256}{\xi^9}\left[1 + i\frac{92}{\xi^3} - \ldots\right] + i\frac{2121}{2}\frac{1}{256}\frac{16384}{\xi^{15}}\left[1 + i\frac{242}{\xi^3} - \ldots\right]$$

$$-i\frac{136479}{2}\frac{1}{1024}\frac{1048576}{\xi^{21}}\left[1 + i\frac{464}{\xi^3} - \ldots\right]$$

$$\left. + i\frac{2681\ 22561}{2}\frac{1}{65536}\frac{671\ 08864}{\xi^{27}}\left[1 + i\frac{758}{\xi^3} - \ldots\right] + \ldots\right\}$$

or

$$\hat{q}(\xi) = -\frac{\sqrt{-\xi}}{2}\exp\left[-i\left(\frac{\xi^3}{12}+\frac{\pi}{4}\right)\right]\left\{1 + i\frac{2}{\xi^3}\left[1 + i\frac{14}{\xi^3} - \frac{364}{\xi^6} - i\frac{13832}{\xi^9} + \frac{691600}{\xi^{12}}\right.\right.$$

$$+ i\frac{428\ 79200}{\xi^{15}} - \frac{31730\ 60800}{\xi^{18}} - i\frac{27\ 28832\ 28800}{\xi^{21}} + \frac{2674\ 25564\ 22400}{\xi^{24}}$$

$$\left. + i\frac{2\ 94168\ 12064\ 64000}{\xi^{27}} - \ldots\right] - i\frac{168}{\xi^9}\left[1 + i\frac{92}{\xi^3} - \frac{7760}{\xi^6} - i\frac{695920}{\xi^9}\right.$$

$$\left. + \frac{68397840}{\xi^{12}} + i\frac{74012\ 06400}{\xi^{15}} - \frac{87\ 92573\ 44000}{\xi^{18}} - i\frac{11410\ 58264\ 19200}{\xi^{21}} + \ldots\right]$$

(continued)

$$+ i \frac{67872}{\xi^{15}} \left[1 + i \frac{242}{\xi^{3}} - \frac{43344}{\xi^{6}} - i \frac{71\ 93760}{\xi^{9}} + \frac{11890\ 93920}{\xi^{12}} \right.$$

$$\left. + i \frac{20\ 16965\ 59680}{\xi^{15}} - \dots \right] - i \frac{698\ 77248}{\xi^{21}} \left[1 + i \frac{464}{\xi^{3}} - \frac{1\ 43836}{\xi^{6}} \right.$$

$$\left. - i \frac{383\ 25056}{\xi^{9}} + \dots \right] + i \frac{13\ 72787\ 51232}{\xi^{27}} \left[1 + i \frac{758}{\xi^{3}} - \dots \right] - \dots \Bigg\}$$

or

$$\boxed{\begin{aligned} \hat{q}(\xi) = & - \frac{\sqrt{-\xi}}{2} \exp\left[-i \left(\frac{\xi^{3}}{12} + \frac{\pi}{4} \right) \right] \Bigg\{ 1 + i \frac{2}{\xi^{3}} - \frac{28}{\xi^{6}} - i \frac{896}{\xi^{9}} + \frac{43120}{\xi^{12}} + i \frac{27\ 54752}{\xi^{15}} \\ & - \frac{2190\ 97984}{\xi^{18}} - i \frac{2\ 08486\ 79936}{\xi^{21}} + \frac{230\ 98470\ 54592}{\xi^{24}} \\ & + i \frac{29209\ 46717\ 69600}{\xi^{27}} - \frac{41\ 52479\ 68861\ 14304}{\xi^{30}} - \dots \Bigg\} \end{aligned}}$$

(10.14)

Section 11

SOME REMARKS ON THE EVALUATION OF f, g, $\hat{p}$, $\hat{q}$ FOR MODERATE VALUES OF ξ

The integrals

$$f(\xi) = \frac{1}{\pi}\int_{-\infty}^{\infty} \frac{\exp(i\xi t)}{Bi(t) + i\,Ai(t)}\,dt = \frac{1}{\sqrt{\pi}}\int_{-\infty}^{\infty} \frac{\exp(i\xi t)}{w_1(t)}\,dt$$

$$g(\xi) = \frac{1}{\pi}\int_{-\infty}^{\infty} \frac{\exp(i\xi t)}{Bi'(t) + i\,Ai'(t)} = \frac{1}{\sqrt{\pi}}\int_{-\infty}^{\infty} \frac{\exp(i\xi t)}{w_1'(t)}\,dt$$

$$\hat{p}(\xi) = \frac{1}{\sqrt{\pi}}\int_{-\infty}^{\infty} \exp(i\xi t)\,\frac{Ai(t)}{Bi(t) + i\,Ai(t)}\,dt = \frac{1}{\sqrt{\pi}}\int_{-\infty}^{\infty} \exp(i\xi t)\,\frac{v(t)}{w_1(t)}\,dt$$

$$\hat{q}(\xi) = \frac{1}{\sqrt{\pi}}\int_{-\infty}^{\infty} \exp(i\xi t)\,\frac{Ai'(t)}{Bi'(t) + i\,Ai'(t)}\,dt = \frac{1}{\sqrt{\pi}}\int_{-\infty}^{\infty} \exp(i\xi t)\,\frac{v'(t)}{w_1'(t)}\,dt \tag{11.1}$$

can be readily evaluated for $\xi > 1$ (residue series), and $\xi << -1$ (asymptotic expansions). For moderate values of ξ it is much more difficult to find a suitable representation. One method which has been investigated has been the method of stationary phase.

The integral

$$y(\xi) = \frac{1}{\sqrt{\pi}}\int_{-\infty}^{-\tau} \exp(i\xi t)\,\frac{1}{w_1(t)}\,dt = \frac{1}{\pi}\int_{-\infty}^{-\tau} \exp(i\xi t)\,\frac{1}{Bi(t) + i\,Ai(t)}\,dt$$

$$= \frac{1}{\pi}\int_{-\infty}^{-\tau} \frac{1}{F(t)}\exp\left[i\xi t - i\chi(t)\right]dt = \frac{1}{\pi}\int_{-\infty}^{-\tau} \frac{1}{F(t)}\exp\left[i\phi(t)\right]dt$$

$$\phi(t) = \xi t - \chi(t) \tag{11.2}$$

can be integrated by making a transformation from t to u where

$$\phi(t) = \phi(t_o) + \frac{\pi}{2} u^2 = \xi t_o - \chi(t_o) + \frac{\pi}{2} u^2$$

$$\phi'(t_o) = \xi - \frac{d\chi}{dt} = \xi + \frac{1}{\pi F^2(t_o)} = 0$$

The condition $\phi'(t_o) = 0$ can be satisfied only for $\xi < 0$. We assume that we can calculate the constants c_n defined by

$$\frac{1}{\pi F(t)} \frac{dt}{du} = \sum_{n=o}^{\infty} c_n u^n \tag{11.3}$$

We observe that

$$c_o = \frac{1}{\pi F(t_o)} \left(\frac{dt}{du}\right)_{t=t_o}$$

and

$$\phi'(t) \frac{dt}{du} = \pi u$$

or

$$\left(\xi - \frac{d\chi}{dt}\right) \frac{dt}{du} = \pi u$$

or

$$\left(\xi + \frac{1}{\pi F^2(t)}\right) \frac{dt}{du} = \pi u$$

Therefore, we have

$$\left(\xi + \frac{1}{\pi F^2(t)}\right) \frac{d^2t}{du^2} - \frac{2}{\pi} \frac{F'(t)}{F^3(t)} \left(\frac{dt}{du}\right)^2 = \pi$$

If we let $t = t_o$, the first term vanishes and we obtain

$$\left(\frac{dt}{du}\right)^2_{t=t_o} = -\frac{\pi^2}{2}\frac{F^3(t_o)}{F'(t_o)}$$

or

$$\frac{dt}{du} = \frac{\pi}{\sqrt{2}}\frac{F^2(t_o)}{\sqrt{-F(t_o)F'(t_o)}}$$

so that

$$\boxed{c_o = \frac{1}{\sqrt{2}}\frac{F(t_o)}{\sqrt{-F(t_o)F'(t_o)}}} \tag{11.4}$$

Let us now observe that

$$\frac{d}{du}\left\{\frac{1}{\pi F(t)}\frac{dt}{du}\right\}_{t=t_o} = c_1$$

or

$$\frac{1}{\pi F(t_o)}\left(\frac{d^2t}{du^2}\right)_{t=t_o} - \frac{1}{\pi}\frac{F'(t_o)}{F^2(t_o)}\left(\frac{dt}{du}\right)^2_{t=t_o} = c_1$$

and

$$\left(\xi + \frac{1}{\pi F^2(t)}\right)\frac{d^3t}{du^2} - \frac{6}{\pi}\frac{F'(t)}{F^3(t)}\frac{d^2t}{du^2}\frac{dt}{du} + \frac{6}{\pi}\frac{[F'(t)]^2}{F^4(t)}\left(\frac{dt}{du}\right)^3 - \frac{2}{\pi}\frac{F''(t)}{F^3(t)}\left(\frac{dt}{du}\right)^3 = 0$$

so that

$$\left(\frac{d^2t}{du^2}\right)_{t=t_o} = \left(\frac{F'(t_o)}{F(t_o)} - \frac{1}{3}\frac{F''(t_o)}{F'(t_o)}\right)\left(\frac{dt}{du}\right)^2_{t=t_o}$$

Therefore,

$$c_1 = -\frac{1}{3\pi} \frac{F''(t_o)}{F(t_o)\,F'(t_o)} \left(\frac{dt}{du}\right)^2_{t=t_o}$$

$$\boxed{c_1 = \frac{\pi}{6} \left[\frac{F(t_o)}{F'(t_o)}\right]^2 F''(t_o)} \tag{11.5}$$

Higher coefficients can be obtained in the same manner. They become quite complex, however. For example,

$$C_2 = \frac{\pi^2}{4\sqrt{2}} \frac{1}{\left[-F(t_o)F'(t_o)\right]^{3/2}} \left\{ -\frac{1}{4}\left[F'(t_o)\right]^2 F^3(t_o) - \frac{1}{4} F''(t_o)F^4(t_o) \right.$$

$$\left. + \frac{5}{12} \frac{\left[F''(t_o)\right]^2 F^5(t_o)}{\left[F'(t_o)\right]^2} - \frac{1}{4} \frac{F'''(t_o)\,F^5(t_o)}{F'(t_o)} \right\} \tag{11.6}$$

We now have

$$y(\xi) = \exp\left[i\phi(t_o)\right] \int_{-\infty}^{u_o} (c_o + c_1 u \quad \ldots) \exp\left(i\,\frac{\pi}{2}\,u^2\right) du$$

$$= \exp\left[i\phi(t_o)\right] \int_{-\infty}^{\infty} (c_o + c_1 u + \ldots) \exp\left(i\,\frac{\pi}{2}\,u^2\right) du$$

$$- \exp\left[i\phi(t_o)\right] \int_{u_o}^{\infty} (c_o + c_1 u + \ldots) \exp\left(i\,\frac{\pi}{2}\,u^2\right) du \tag{11.7}$$

These integrals can be readily expressed in terms of Fresnel integrals. This approach has not been studied further than the obtaining of the results outlined above. However, it is possible that significant results will be obtained later by using this approach.

Some appreciation of the difficulty in numerically evaluating these integrals can be obtained by considering Fig. 17 where the function

$$\frac{\exp(-i\,3t)}{Bi(t) + i\,Ai(t)} = \frac{\sqrt{\pi}}{w_1(t)} \exp(-i\,3t)$$

is illustrated. The stationary phase point is in the vicinity of $t = -9$.

Let us now consider another way in which $f(\xi)$ or $g(\xi)$ may be evaluated. We consider both functions simultaneously by seeking to evaluate the integral

$$V_1(x, q) = \frac{1}{\sqrt{\pi}} \int_{-\infty}^{\infty} \exp(ixt) \frac{1}{w_1'(t) - q w_1(t)} dt \tag{11.8}$$

as a function of x for prescribed values of q . Tables of $w_1'(t)$ and $w_1(t)$ are available.

For $t \to \infty$ we have

$$w_1'(t) \to \sqrt[4]{t} \exp\left(\frac{2}{3} t^{3/2}\right)$$

$$w_1(t) \to \frac{1}{\sqrt[4]{t}} \exp\left(\frac{2}{3} t^{3/2}\right) \tag{11.9}$$

and therefore the integral converges at the upper limit like

$$\frac{1}{\sqrt{\pi}} \int_{t_0}^{\infty} \exp\left(-\frac{2}{3} t^{3/2} + ixt\right) \frac{1}{\sqrt[4]{t}\,(1 - \frac{q}{\sqrt{t}})} dt$$

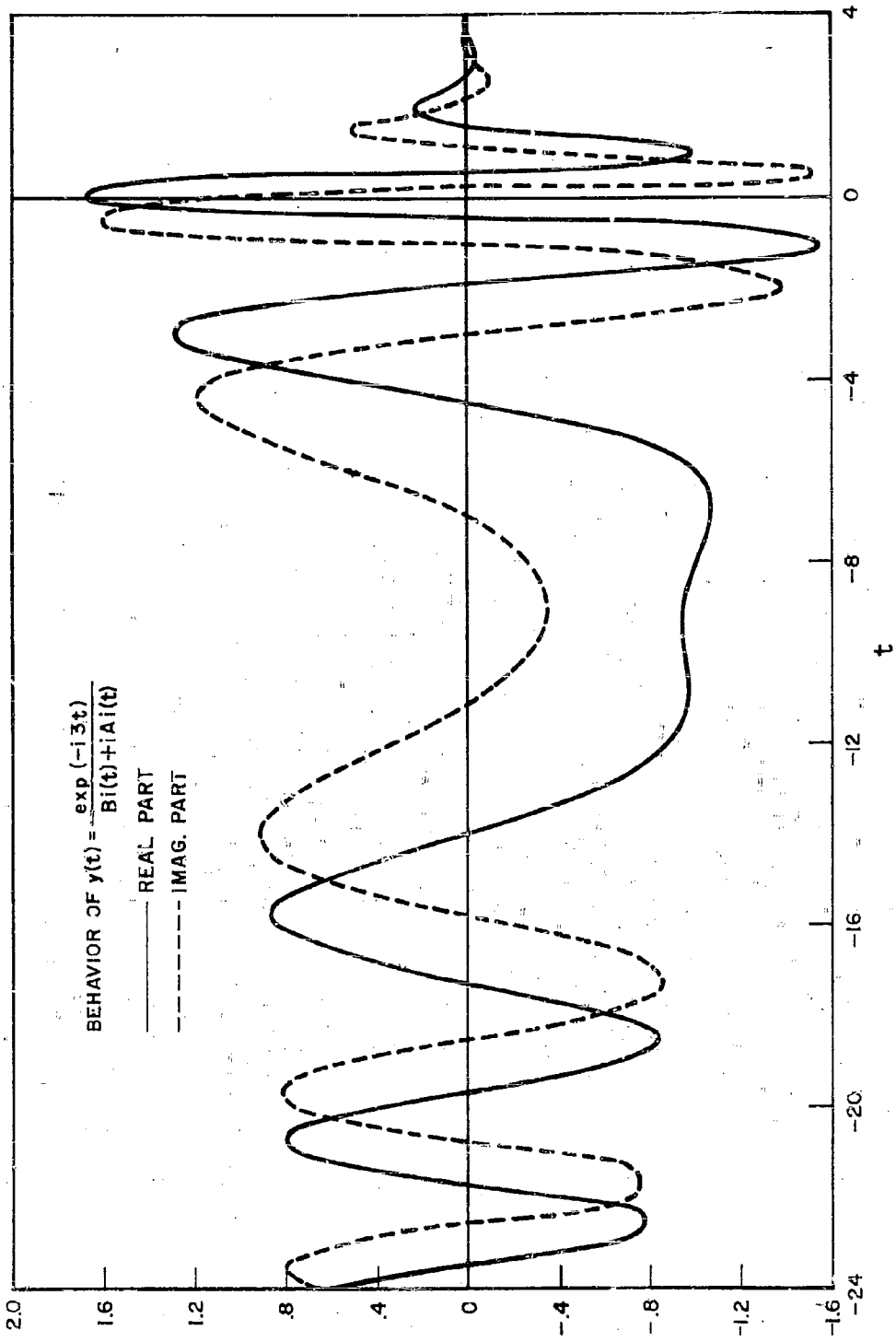
BEHAVIOR OF y(t) = exp (-i3t) / Bi(t)+iAi(t)
REAL PART
IMAG. PART
2.0
1.6
1.2
.8
.4
0
-.4
-.8
-1.2
-1.6
-24
-20
-16
-12
-8
-4
0
4
t

Fig. 17

For $t \to -\infty$ we have

$$w_1'(t) \to (-t)^{1/4} \exp\left[i \frac{2}{3} (-t)^{3/2} - i\frac{\pi}{4}\right]$$

$$w_1(t) \to \frac{i}{\sqrt{-t}} \; w_1'(t)$$

and therefore the integral behaves like

$$\frac{1}{\sqrt{\pi}} \exp\left(i \frac{\pi}{4}\right) \int_{-\infty}^{t_1} \exp\left[i \frac{2}{3} (-t)^{3/2} - ix(-t)\right] \frac{1}{\sqrt[4]{-t}\left(1 - \frac{iq}{\sqrt{-t}}\right)} \, dt \tag{11.10}$$

Because of the oscillatory nature of the integrand along the negative real axis, many authors have found it desirable to use another contour. Fock in 1945 proposed the contour $\infty \exp\left(i \frac{2\pi}{3}\right)$ to 0 and 0 to ∞. The result is

$$V_1(x, q) = \frac{1}{\sqrt{\pi}} \int_0^\infty \frac{\exp\left(-xt \frac{\sqrt{3}+i}{2}\right)}{w_2'(t) - q \exp\left(i \frac{2\pi}{3}\right) w_2(t)} \, dt + \frac{1}{\sqrt{\pi}} \int_0^\infty \frac{\exp(ixt)}{w_1'(t) - q \, w_1(t)} \, dt \tag{11.11}$$

The first integral converges like

$$\frac{1}{\sqrt{\pi}} \int_{t_0}^\infty \exp\left(-i \frac{xt}{2}\right) \exp\left(-x \frac{\sqrt{3}}{2} t\right) \exp\left(-\frac{2}{3} t^{3/2}\right) \frac{1}{\sqrt[4]{t}\left[1 - \frac{q}{\sqrt{t}} \exp\left(i \frac{2\pi}{3}\right)\right]} \, dt \tag{11.12}$$

For $x < 0$ this integrand has a peak in its amplitude in the vicinity of $t_c = \frac{3}{4} x^2$. The amplitude at t_c is proportional to $\exp\left(-\frac{\sqrt{3}}{8} x^3\right) = \exp\left(\frac{\sqrt{3}}{8} [-x]^3\right)$. For large negative values of x this oscillation in the amplitude is too great to allow computation of $V_1(x, q)$ from existing tables of $w_1(t)$, $w_1'(t)$.

As an alternative to numerical evaluation of the integrals it is proposed that the Poisson summation formula be employed. If we compute the sum

$$S_1(x, q) = \frac{1}{2\sqrt{\pi}} \sum_{n=-\infty}^{\infty} \frac{\exp\left(i x \frac{n}{2}\right)}{w_1'\left(\frac{n}{2}\right) - q w_1\left(\frac{n}{2}\right)} \tag{11.13}$$

the Poisson summation formula tells us that

$$S_1(x, q) = \sum_{m=-\infty}^{\infty} V_1(x + 4\pi m, q) \qquad -2\pi < x < 2\pi \tag{11.14}$$

or

$$V_1(x, q) = S_1(x, q) - V_1(x + 4\pi, q) - V_1(x + 8\pi, q) - \ldots$$

$$- V_1(x - 4\pi, q) - V_1(x - 8\pi, q) - \ldots \tag{11.15}$$

For $x > 0$ we can show that

$$V_1(x, q) = 2\sqrt{\pi}\, i \sum_{s=1}^{\infty} \frac{\exp(ixt_s)}{t_s - q^2} \frac{1}{w_1(t_s)}$$

where

$$w_1'(t_s) - q w_1(t_s) = 0$$

where the imaginary part of t_s generally exceeds unity. For $x < 0$ we can show that

$$V_1(x, q) \sim \frac{2 \exp(-i x^3/3)}{1 + i \frac{q}{x}}$$

Therefore, the series

$$V_1(x + 4\pi, q) + V_1(x + 8\pi, q) + \ldots$$

converges rapidly and can be approximated by the first term. On the other hand, the series

$$V_1(x - 4\pi, q) + V_1(x - 8\pi, q) + V_1(x - 12\pi, q) + \ldots$$

behaves like

$$2\sum_{m=1}^{\infty} \frac{\exp\left[i\,\frac{1}{3}\,(4\pi m - x)^3\right]}{1 - i\,\frac{q}{4\pi m - x}}$$

We can interpret this series in the Abel sense,

$$\lim_{r \to 1} \quad 2\sum_{m=1}^{\infty} r^m \frac{\exp\left[i\,\frac{1}{3}(4\pi m - x)^3\right]}{1 - i\,\frac{q}{4\pi m - x}} \tag{11.16}$$

However, a better approach might be that of computing numerically the derivative evaluated at $\xi = 1$ for the function

$$-6i\sum_{m=1}^{\infty} \frac{1}{(4\pi m - x)^3} \; \frac{\exp\left[i\,\frac{1}{3}\,\xi\,(4\pi m - x)^3\right]}{1 - i\,\frac{q}{4\pi m - x}} \tag{11.17}$$

It is also not practical to compute the part of $S_1(x, q)$ consisting of

$$\frac{1}{2\sqrt{\pi}} \sum_{n=-\infty}^{-N} \frac{\exp\left(i\,x\,\frac{n}{2}\right)}{w_1'\left(\frac{n}{2}\right) - q\,w_1\left(\frac{n}{2}\right)}, \qquad \text{where} \quad N \gg 2x^2 \tag{11.18}$$

It is suggested that this series be evaluated by numerically evaluating the derivative at $\xi = 1$ of the function

$$\frac{\exp\left(i\frac{\pi}{4}\right)}{2\sqrt{\pi}} \sum_{n=N}^{\infty} \exp\left[i\frac{(-x)}{2}n\right] \frac{1}{\sqrt[4]{\frac{n}{2}}\left(1-\frac{iq}{\sqrt{\frac{n}{2}}}\right)} \frac{\exp\left[i\frac{2}{3}\xi\left(\frac{n}{2}\right)^{3/2}\right]}{i\frac{2}{3}\left(\frac{n}{2}\right)^{3/2}} \tag{11.19}$$

We have studied the case of $q = 0$. The sum

$$S_N(x) = \frac{1}{2\sqrt{\pi}} \sum_{n=-N}^{\infty} \frac{\exp\left(ix\frac{n}{2}\right)}{w_1'\left(\frac{n}{2}\right)} = \frac{1}{2\pi} \sum_{n=-N}^{\infty} \frac{\exp\left(ix\frac{n}{2}\right)}{Bi'\left(\frac{n}{2}\right) + i\,Ai'\left(\frac{n}{2}\right)} \tag{11.20}$$

has been evaluated. However, a study of the sum

$$2\sum_{m=1}^{\infty} r^m \exp\left\{i\,\frac{1}{3}\left[4\pi m + (-x)\right]^3\right\} \tag{11.21}$$

has revealed that this approach does not readily lead to the evaluation of the limit as $r \to 1$ from below.

We need therefore to study the numerical differention of the sums

$$-6i\sum_{m=1}^{\infty} \frac{1}{\left[4\pi m + (-x)\right]^3} \exp\left\{i\frac{\xi}{3}\left[4\pi m + (-x)\right]^3\right\} \tag{11.22}$$

$$\frac{\exp\left(-i\frac{\pi}{4}\right)}{2\sqrt{\pi}} \sum_{n=N}^{\infty} \exp\left[i\frac{(-x)}{2}n\right] \frac{1}{\sqrt[4]{\frac{n}{2}}} \frac{\exp\left[i\frac{2}{3}\xi\left(\frac{n}{2}\right)^{3/2}\right]}{\frac{2}{3}\left(\frac{n}{2}\right)^{3/2}} \tag{11.23}$$

The practicability of this approach has not yet been determined.

Section 12
SERIES EXPANSIONS FOR f, g, p, q

It can be shown that in the vicinity of $\xi = 0$ these functions can be expressed in the forms

$$f(\xi) = \sum_{n=0}^{\infty} \left(\gamma_n + i\delta_n\right) \frac{\xi^n}{n!} = \sum_{n=0}^{\infty} f^{(n)}(0) \frac{\xi^n}{n!}$$

$$g(\xi) = \sum_{n=0}^{\infty} \left(\alpha_n + i\beta_n\right) \frac{\xi^n}{n!} = \sum_{n=0}^{\infty} g^{(n)}(0) \frac{\xi^n}{n!}$$

$$\hat{p}(\xi) = -\frac{1}{2\sqrt{\pi}\,\xi} + p(\xi) \; ; \qquad \hat{q}(\xi) = -\frac{1}{2\sqrt{\pi}\,\xi} + q(\xi)$$

$$p(\xi) = \sum_{n=0}^{\infty} \left(c_n + i\,d_n\right) \frac{\xi^n}{n!} = \sum_{n=0}^{\infty} p^{(n)}(0) \frac{\xi^n}{n!}$$

$$q(\xi) = \sum_{n=0}^{\infty} \left(a_n + i\,b_n\right) \frac{\xi^n}{n!} = \sum_{n=0}^{\infty} q^{n}(0) \frac{\xi^n}{n!} \tag{12.1}$$

where α_n, β_n, γ_n, δ_n, a_n, b_n, c_n, d_n are real constants.

It can be shown that these constants can be determined from the summable divergent series

$$f^{(n)}(0) = \exp\left(i\,\frac{5n\pi}{6} - i\,\frac{\pi}{3}\right) \sum_{s=1}^{\infty} \frac{(\alpha_s)^n}{Ai'(-\alpha_s)}$$

$$g^{(n)}(0) = \exp\left(i\,\frac{5n\pi}{6}\right) \sum_{s=1}^{\infty} \frac{(\beta_s)^{n-1}}{Ai(-\beta_s)}$$

$$p^{(n)}(0) = -\frac{\exp\left[i\,\frac{(5n-1)\pi}{6}\right]}{2\sqrt{\pi}} \sum_{s=1}^{\infty} \frac{(\alpha_s)^n}{\left[Ai'(-\alpha_s)\right]^2}$$

$$q^{(n)}(0) = -\frac{\exp\left[i\,\frac{(5n-1)\pi}{6}\right]}{2\sqrt{\pi}} \sum_{s=1}^{\infty} \frac{(\beta_s)^{n-1}}{\left[Ai(-\beta_s)\right]^2} \qquad (12.2)$$

The series for $f^{(n)}(0)$ and $g^{(n)}(0)$ have alternating signs and can be summed by means of the Euler summation formula (Ref. 36). If we let $R_E\left\{f(N)\right\}$ denote the operation

$$R_E\left\{f(N)\right\} = \frac{1}{2}\,f(N) - \frac{1}{4}\,\Delta f(N) + \frac{1}{8}\,\Delta^2 f(N) - \frac{1}{16}\,\Delta^3 f(N) + \ldots \qquad (12.3)$$

where $\Delta^n f(N)$ are the forward differences

$$\Delta f(N) = f(N+1) - f(N)$$

$$\Delta^2 f(N) = f(N+2) - 2f(N+1) + f(N),$$

etc.,

we can write

$$f^{(n)}(o) = \exp\left(i\,\frac{5n\pi}{6} - i\frac{\pi}{3}\right)\left[\sum_{s=1}^{N-1} \frac{(\alpha_s)^n}{Ai'(-\alpha_s)} + R_E\left\{\frac{\left(-a_N\right)^n}{Ai'(a_N)}\right\}\right]$$

$$g^{(n)}(o) = \exp\left(i\,\frac{5n\pi}{6}\right)\left[\sum_{s=1}^{N-1} \frac{(\beta_s)^{n-1}}{Ai(-\beta_s)} + R_E\left\{\frac{\left(-a_N'\right)^{n-1}}{Ai(a_N')}\right\}\right] \qquad (12.4)$$

In Tables 12 and 13 we list values of

$$P_n(s) = \frac{\alpha_s^n}{Ai'(-\alpha_s)} \quad \text{and} \quad Q_n(s) = \frac{\beta_s^n}{\beta_s\, Ai(-\beta_s)}$$

The reader can readily see that the divergent series which represent $f^{(n)}(o)$ and $g^{(n)}(o)$ would seem to offer no information as to the numerical value of these constants. However, in Tables 14 and 15 we show how rapidly the Euler summation scheme leads to a value for these series. In these tables the constants E_n are defined by $1/(2^{n+1})$.

Table 12

$$P_n(s) = \frac{\alpha_s^n}{Ai'(-\alpha_s)}$$

s	P_0	s	P_1	s	P_2
1	1.42610462873340	1	3.33438580053254	1	7.7961521495569
2	1.24515731912710	2	5.09014017058123	2	20.8082356808762
3	1.15579674859520	3	6.38064509973811	3	35.2247330149489
4	1.09787472230530	4	7.45095525975466	4	50.5674583401396
5	1.05559200401030	5	8.38576389335443	5	66.6176285988622
6	1.02257559721180	6	9.22634258478867	6	83.2460677958597
7	0.995648892214420	7	9.99648846081186	7	100.366486949923
8	0.973009978973720	8	10.7114040013071	8	117.916751275494
9	0.953542777427160	9	11.3815014315821	9	135.849778220360
10	0.936510349281340	10	12.0142821976786	10	154.128544159948
11	0.921401816261230	11	12.6153628643638	11	172.723102332641
12	0.907849161032590	12	13.1890782333433	12	191.608685794672
13	0.985578920797900	13	13.7388569289040	13	210.764439994550
14	0.884382617105750	14	14.2674663200428	14	230.172542128578
15	0.874097853120910	15	14.7771783828013	15	249.817569254371
16	0.864595784623310	16	15.2698856223529	16	269.686032556043
17	0.855772556602640	17	15.7471842888076	17	289.766026162499
18	0.847543293727700	18	16.2104355042324	18	310.046957107190
19	0.839837785186180	19	16.6608110704991	19	330.519334117992
20	0.832597323183450	20	17.0993284042597	20	351.174599935989
21	0.825772345067290	21	17.5268775962157	21	372.004996422708
22	0.819320646688550	22	17.9442426617784	22	393.003454759989
23	0.813206009212090	23	18.3521184380805	23	414.163505126651
24	0.807397130073680	24	18.7511241702632	24	435.479201686713
25	0.801866760981850	25	19.1418145469613	25	456.945059753701

s	P_3	s	P_4	s	P_5
1	18.228241113950	1	42.61958562817	1	99.6491689879
2	85.063015484984	2	347.73330686794	2	1421.5161785166
3	194.460246037717	3	1073.52942243739	3	5926.4834037864
4	343.186578611392	4	2329.10712946598	4	15806.9701981905
5	529.219340846563	5	4204.18914057313	5	33398.6401582357
6	751.100204635594	6	6776.91490229993	6	61145.7370262556
7	1007.69702702693	7	10117.4538348200	7	101581.000394257
8	1298.08942223353	8	14290.0489530768	8	157312.351201483
9	1621.50506710041	9	19354.3097167770	9	231013.341995145
10	1977.23068427219	10	25366.0924762816	10	325415.937470765
11	2364.83646171492	11	32378.1324856362	11	443304.845907687
12	2783.65840450813	12	40440.5159445242	12	587512.938804105
13	3233.28566532791	13	49601.0436764631	13	760917.465529570
14	3713.30115393419	14	59905.5184093438	14	966436.807661564
15	4223.32439194199	15	71397.9764225894	15	1207028.05755742
16	4763.00595528707	16	84120.8775815474	16	1485684.06412231
17	5332.02307016145	17	98115.2635360721	17	1805431.97433341
18	5930.07006651465	18	113420.891089385	18	2169331.11670370
19	6556.88548195802	19	130076.345876226	19	2580471.44533306
20	7212.18966766590	20	148119.140196935	20	3041972.09222342
21	7895.74278725716	21	167585.797938271	21	3556980.06220936
22	8607.31312903341	22	188511.928849266	22	4128669.04988055
23	9346.68166825183	23	210932.293952167	23	4760238.36171209
24	10113.6408345289	24	234880.863503181	24	5454911.92960381
25	10907.9934465491	25	260390.868639860	25	6215937.40436939

Table 12 (Cont'd)

$$P_n(s) = \frac{\alpha_s^n}{Ai'(-\alpha_s)}$$

s	P_6	s	P_7	s	P_8
1	232.990460456	1	544.75672216	1	1273.6997289
2	5811.086271790	2	23755.42689456	2	97110.9841687
3	32717.506200818	3	180618.95040770	3	997117.7218135
4	107277.292523582	4	728059.66905078	4	4941128.4460019
5	265323.259045203	5	2107763.41362536	5	16744354.1278857
6	551696.636358108	6	4977766.12682183	6	44912645.7919007
7	1019893.95374821	7	10233882.9850096	7	102810210.406651
8	1731776.84147893	8	19064307.4480631	8	209869891.875844
9	2757378.84536928	9	32912116.8120662	9	392839538.487873
10	4174688.41363698	10	53556145.6713242	10	687059836.561378
11	6069503.43700086	11	83100539.7568709	11	1137770128.90128
12	8535288.06941380	12	123999213.661860	12	1801439490.23335
13	11673048.5173781	13	179073378.995488	13	2747120858.54196
14	15591221.7100489	14	251528271.060357	14	4057826405.08766
15	20405574.5656944	15	344969175.114894	15	5831022614.88770
16	26239112.1187158	16	463416833.635673	16	8184543772.87152
17	33221993.1585573	17	611322301.320563	17	11249022727.4521
18	41491452.3126980	18	793581303.361737	18	15178337945.3454
19	51191727.7143955	19	1015548143.77981	19	20146575987.6005
20	62473993.5538569	20	1283049203.68766	20	26350408633.0641
21	75496296.9333191	21	1602396063.78440	21	34010583956.1863
22	90423498.5419490	22	1980398280.84607	22	43373430734.4745
23	107427216.742136	23	2424375844.24052	23	54712375619.3488
24	126685774.719706	24	2942171335.38538	24	68329472554.5606
25	148384150.399980	25	3542161810.45305	25	84556943970.1677

s	P_9	s	$10^{-10}\ P_{10}$	s	$10^{-11}\ P_{11}$
1	2978.046775	1	0.000000696299323	1	0.000000162802260
2	396984.793751	2	0.000162285376694	2	0.000066341441544
3	5504648.038926	3	0.003038873883149	3	0.001677628508195
4	33533996.398565	4	0.022758544465057	4	0.015445559783926
5	133019386.021982	5	0.105672377223542	5	0.083947548113244
6	405231121.880094	6	0.365625892763175	6	0.329891477334321
7	1032232436.57503	7	1.03637936242245	7	1.04054204827141
8	2310357805.33708	8	2.543363[illegible]0503729	8	2.79986734541689
9	4688938845.24581	9	5.596724[illegible]319172	9	6.68025931604454
10	8814137259.10638	10	11.3074599166192	10	14.5060878912286
11	15577767244.4421	11	21.3282829420343	11	29.2015952040734
12	26171006582.5228	12	38.0207933297683	12	55.2359620126466
13	42142908419.8298	13	64.6504038786554	13	99.1786015344534
14	65463635814.8204	14	105.610422582945	14	170.377969682265
15	98592349228.6257	15	166.676617100593	15	281.777388463239
16	144549683800.898	16	255.293534579128	16	450.8815728[illegible]13
17	206994758819.340	17	380.893800437556	17	700.887732806739
18	290306666509.376	18	555.251575786866	18	1081.99528974247
19	398670391315.456	19	792.871313679117	19	1572.90841081861
20	541167114350.579	20	1111.41291861050	20	2282.54571073974
21	721868860753.995	21	1532.15438111142	21	3251.97161864960
22	949937450397.374	22	2080.49292939657	22	4556.56404267299
23	1234727714774.13	23	2796.49571255275	23	6288.43309610248
24	1586894945046.73	24	3685.43100492112	24	8559.10577446033
25	2018506538146.99	25	4818.49089292965	25	11502.4915928982

Table 12 (Cont'd)

$$P_n(s) = \frac{\alpha_s^n}{A'(-\alpha_s)}$$

s	10^{-12} P_{12}	s	10^{-13} P_{13}	s	10^{-14} P_{14}
1	0.000000038064917	1	0.000000008899986	1	0.000000002080912
2	0.000027120045908	2	0.000011086537659	2	0.000004532120546
3	0.000926144854881	3	0.000511283808085	3	0.003282257285167
4	0.010482450554126	4	0.007114133197946	4	0.004828154532835
5	0.066689053652286	5	0.052978675101243	5	0.042086967227295
6	0.297649561948043	6	0.268558807410707	6	0.242311235285645
7	1.04472326105237	7	1.04892036796468	7	1.05313433647765
8	3.08224077192507	8	3.39309224476945	8	3.73529384413531
9	7.97356791627619	9	9.51726307431942	9	11.3598200174490
10	18.6095363114021	10	23.8737586813327	10	30.6271120374609
11	39.9813320547232	11	54.7403969440360	11	74.9477544542350
12	80.2458663342449	12	116.579830043680	12	169.365194668144
13	152.147464086878	13	233.405699111680	13	358.061967741404
14	274.865414256363	14	443.431718873138	14	715.374430918363
15	476.362539811114	15	805.321074813282	15	1361.44633412102
16	796.315477155034	16	1406.39666208464	16	2483.37935167275
17	1289.71281085344	17	2373.21764474102	17	4366.98925676574
18	2031.21259734726	18	3884.97449609471	18	7430.55003450534
19	3120.35613616008	19	6190.20303375738	19	12280.2051839807
20	4687.74011384536	20	9627.36793027166	20	19772.0460208688
21	6902.25445873882	21	14649.9177114476	21	31094.2012113825
22	9979.49840714064	22	21856.4663034343	22	47868.6502852033
23	14191.4923970414	23	32026.8107138024	23	72276.8667171022
24	19877.8084768120	24	46164.5503926177	24	107213.313552075
25	27458.2469459129	25	65547.1311805381	25	156471.256685168

s	10^{-15} P_{15}	s	10^{-16} P_{16}	s	10^{-17} P_{17}
1	0.000000000486539	1	0.000000000113758	1	0.000000000026597
2	0.000001852707966	2	0.000000757377650	2	0.000000309612154
3	0.000155821822968	3	0.000086022369621	3	0.000047489163805
4	0.003276727542810	4	0.002223819332375	4	0.001509241265389
5	0.033434448993040	5	0.026560772921249	5	0.021100232826358
6	0.218628967382413	6	0.197261283911798	6	0.177981969161792
7	1.05736523433166	7	1.06161312953921	7	1.06587809038606
8	4.11200730647485	8	4.52671323704568	8	4.98324326860481
9	13.5590988523834	9	16.1841614925507	9	19.3174403453014
10	39.2908382913594	10	50.4053392872800	10	64.6638844868970
11	102.614635832382	11	140.494716135119	11	192.368186546902
12	246.050874788811	12	357.458526841740	12	519.209669276890
13	549.294097062733	13	842.658624067751	13	1292.70196150435
14	1154.09104633352	14	1861.85874929488	14	3003.67810090791
15	2301.61134317926	15	3891.01989721215	15	6578.01582589859
16	4386.85386562367	16	7747.75426406170	16	13683.5413202788
17	8035.75483730592	17	14786.6990295986	17	27209.2009548[illegible]
18	14211.9527092878	18	27182.3214799843	18	51989.9422799[illegible]
19	24561.6305536800	19	48328.9191298035	19	95875.5375223[illegible]
20	4[illegible]	20	83394.9396419653	20	171270.963824272
21	65996.9152944983	21	140077.326148101	21	297311.742645353
22	104838.890620074	22	229611.508178357	22	502880.604479089
23	163111.635096104	23	368104.024318881	23	830722.913420122
24	248993.968425038	24	578267.700698716	24	1342978.44058462
25	373521.368939869	25	891653.943416808	25	2128517.45823070

Table 12 (Concluded)

$$P_n(s) = \frac{\alpha_s^n}{Ai'(-\alpha_s)}$$

s	[illegible]	s	10^{-19} P_{19}	s	10^{-20} P_{20}
	[illegible]	1	0.[illegible]00000001454	1	0.000000000000339
1	[illegible]	2	0.00[illegible]0000517403[illegible]0	2	0.000000021151177
2	[illegible]	3	0.00[illegible]0144730735[illegible]5	3	0.000007989946752
3	[illegible]	4	0.0[illegible]0695147572[illegible]07	4	0.000471776365412
4	[illegible]	5	0.0[illegible]331620046[illegible]43	5	0.010578567539022
5	[illegible]	6	0.[illegible]4489196800[illegible]949	6	0.130730963875308
6	[illegible]	7	1.[illegible]744594835[illegible]42	7	1.07877605374151
7	[illegible]	8	6.[illegible]390732854[illegible]701	8	6.64812850348693
8	[illegible]	9	[illegible]27[illegible]5212612251[illegible]51	9	32.8494202303462
9	[illegible]	10	10[illegible].422212881[illegible]77	10	136.526681060242
10	[illegible]	11	36[illegible].588639538[illegible]37	11	493.699540447300
11	[illegible]	12	10[illegible].04378702[illegible]3	12	1592.31377576067
12	[illegible]	13	30[illegible]2.2288719[illegible]25	13	4667.00881922220
13	[illegible]	14	78[illegible]7.4786664[illegible]77	14	12611.6922047265
14	[illegible]	15	18[illegible]99.999545[illegible]67	15	31782.5911468691
15	[illegible]	16	42[illegible]81.910270[illegible]63	16	75381.8026377498
16	[illegible]	17	9[illegible]130.81180[illegible]255	17	169531.128443430
17	[illegible]	18	19[illegible]188.79063[illegible]47	18	363762.317152909
18	[illegible]	19	3[illegible]319.5178[illegible]617	19	748531.360631607
19	[illegible]	20	7[illegible]2390.1702[illegible]627	20	1483596.74149727
20	[illegible]	21	1[illegible]9369.796[illegible]691	21	2842789.61578402
21	[illegible]	22	2[illegible]12166.905[illegible]260	22	5282975.40988794
22	[illegible]	23	[illegible]30848.14[illegible]565	23	9548014.32638645
23	[illegible]	24	243513.27[illegible]7402	24	16822454.7520648
24	[illegible]	25	[illegible]129390.[illegible]791	25	28954752.8790463

Table 13

$$Q_n(s) = \frac{\beta_s^n}{\beta_s \, Ai(-\beta_s)}$$

s	Q_0	s	Q_1	s	Q_2
1	1.83243067797684	1	1.86686749575401	1	1.9019514836712
2	0.734729530600078	2	2.38654668485130	2	7.7519751714933
3	0.545376134438550	3	2.62876707540296	3	12.6709181065224
4	0.453330392656394	4	2.79401454359409	4	17.2203703882971
5	0.396274159274657	5	2.92140334376780	5	21.5371032837454
6	0.356475345977321	6	3.02593624533357	6	25.6856196765035
7	0.326680840226629	7	3.11504850838729	7	29.7033863475853
8	0.303295968469470	8	3.19299695581287	8	33.6147875993167
9	0.284308719742012	9	3.26245866043183	9	37.4368978928432
10	0.268493303359080	10	3.32523274135997	10	41.1823037888756
11	0.255054580298498	11	3.38258969109424	11	44.8606451407626
12	0.243451183763479	12	3.43546185938988	12	48.4795267982308
13	0.233300043634439	13	3.48455479971613	13	52.0450916470911
14	0.224321442178684	14	3.53041602944524	14	55.5623984043212
15	0.216305716987676	15	3.57347942495810	15	59.0356805101292
16	0.209092202768276	16	3.61409496222766	16	62.4685293046285
17	0.202555427229719	17	3.65254926896490	17	65.8640271686516
18	0.196595781268435	18	3.68908020919765	18	69.2248465459767
19	0.191133044574795	19	3.72388747334526	19	72.5533250672998
20	0.186101788117184	20	3.75714042355006	20	75.8515235403614

s	Q_3	s	Q_4	s	Q_5
1	1.937694803978	1	1.97410984749	1	2.0112092378
2	25.179947009162	2	81.78944299457	2	265.6682709828
3	61.075082370159	3	294.38795635508	3	1418.9791562076
4	106.134430481028	4	654.13914688686	4	4031.6606156195
5	158.775342968043	5	1170.51997209141	5	8629.2807148314
6	218.032041879076	6	1850.76209508176	6	15710.1694919281
7	283.235127202149	7	2700.77412529563	7	25753.0940738873
8	353.885068161461	8	3725.58181715799	8	39221.6601521187
9	429.590523502192	9	4929.57558639406	9	56567.1590328932
10	510.034117090283	10	6316.66460258433	10	78230.5543189357
11	594.951698618347	11	7890.37969869105	11	104643.943254717
12	684.118937940347	12	9653.94574077627	12	136231.674343707
13	777.342220238515	13	11610.3345818417	13	173411.228147300
14	874.452214892537	14	13762.3050496501	14	216593.928237579
15	975.299185704678	15	16112.4339283766	15	266185.526350795
16	1079.74947926601	16	18663.1404797429	16	322586.691871706
17	1187.68283613111	17	21416.7062033497	17	386193.426937730
18	1298.99029231361	18	24375.2910077497	18	457397.422619877
19	1413.57251420717	19	27540.9466219294	19	536586.367666736
20	1531.33845818774	20	30915.6278486222	20	624144.218519538

Table 13 (Cont'd)

$$Q_n(s) = \frac{\beta_s^n}{\beta_s \, Ai(-\beta_s)}$$

s	Q_6	s	Q_7	s	Q_8
1	2.049005836	1	2.08751274	1	2.1267433
2	862.943035468	2	2803.00948136	2	9104.7286202
3	6839.620311515	3	32967.64846829	3	158907.3363764
4	24848.363527690	4	153148.10170581	4	943898.8217456
5	63616.587013302	5	468992.75582323	5	3457497.7272622
6	133355.565321433	6	1131986.94713868	6	9608856.1838702
7	245567.316484080	7	2341594.63527677	7	22328156.3461334
8	412912.318286382	8	4347000.66063942	8	45763746.7005612
9	649111.353497530	9	7448589.64281914	9	85472986.8433981
10	968868.858452199	10	11999235.7843870	10	148607995.813510
11	1387810.88845610	11	18405451.8800876	11	244097132.922111
12	1922433.54094069	12	27128424.7010688	12	382822818.624689
13	2590059.21281425	13	38684961.7383809	13	577796158.981993
14	3408798.85892213	14	53648362.8841297	14	844328738.439364
15	4397519.00635342	15	72649229.5668795	15	1200201874.97445
16	5575812.59626056	16	96376220.3835192	16	1665833579.42158
17	6963972.96548713	17	125576760.455467	17	2264443421.11068
18	8582970.44136992	18	161057710.328751	18	3022215471.15102
19	10454431.1391432	19	203685999.177246	19	3968459470.30966
20	12600617.6364529	20	254389226.253994	20	5135770348.81941

s	Q_9	s	$10^{-10}\ Q_{10}$	s	$10^{-11}\ Q_{11}$
1	2.166711	1	0.000000000220743	1	0.000000000022489
2	29573.957490	2	0.000009606205721	2	0.000003120285419
3	765949.126718	3	0.000369195078149	3	0.000177955690496
4	5817538.551044	4	0.003585527814336	4	0.002209870995195
5	25489286.104302	5	0.018791153526554	5	0.013853171462457
6	81564648.245885	6	0.069236043460018	6	0.058770923642637
7	212908997.273326	7	0.203018289630451	7	0.193587055748336
8	481785183.755888	8	0.507207079886771	8	0.533970388798037
9	980807364.660701	9	1.12548200560160	9	1.29149697542412
10	1840478578.51446	10	2.27939376978170	10	2.82298094548499
11	3237269624.72769	11	4.29333786010857	11	5.69391867771661
12	5402204959.36051	12	7.62332259288608	12	10.7576531790087
13	8629927143.06139	13	12.8896049821038	13	19.2518330503238
14	13288215711.1544	14	20.9132614759213	14	32.9137120488735
15	19827939666.8082	15	32.7567553115976	15	54.1158101434047
16	28793425424.7124	16	49.7685577917302	16	86.0234344519128
17	40833224147.6306	17	73.6318769878044	17	132.775538104594
18	56711264151.3447	18	106.417544094521	18	199.690376516513
19	77318375495.1464	19	150.641104789763	19	293.497403520912
20	103684175089.543	20	209.32416042454 7	20	422.596834083899

Table 13 (Cont'd)

$$Q_n(s) = \frac{\beta_s^n}{\beta_s \, Ai(-\beta_s)}$$

s	10^{-12} Q_{12}	s	10^{-13} Q_{13}	s	10^{-14} Q_{14}
1	0.000000000002291	1	0.000000000000233	1	0.000000000000023
2	0.000001013530355	2	0.000000329214685	2	0.000000106935434
3	0.000085776408338	3	0.000041345079817	3	0.000019928736661
4	0.001362011415970	4	0.000839449497851	4	0.000517378526479
5	0.010212803556580	5	0.007529059809009	5	0.005550556347587
6	0.049887620568661	6	0.042347040538889	6	0.035916229185936
7	0.184593950729887	7	0.176018621257227	7	0.167816659527788
8	0.562145891529704	8	0.591308103956957	8	0.623005473862611
9	1.48200009349602	9	1.70060350036898	9	1.95145214778287
10	3.49620215875845	10	4.32997238414136	10	5.36257916335269
11	7.55139962537918	11	10.0148315298813	11	13.2818818613473
12	15.1806644034408	12	21.4221975642093	12	30.2299393138988
13	28.7544169361335	13	42.9474165486481	13	64.1459916332003
14	51.8002628180901	14	81.5242967441298	14	128.304579900777
15	89.4020448490567	15	147.696682393044	15	244.002360347817
16	148.688883167359	16	257.004200290505	16	444.223922164613
17	239.435426054050	17	431.740179399658	17	778.528770[illegible]31651
18	374.714966527400	18	703.145081846343	18	1319.4375732828
19	571.827496842488	19	1114.10418703021	19	2170.6338824[illegible]193
20	853.165176038568	20	1722.42373557491	20	3477.3378100675

s	10^{-15} Q_{15}	s	10^{-16} Q_{16}	s	10^{-17} Q_{17}
1	0.000000000000002	1	0.000000000000000	1	0.000000000000000
2	0.000000034734741	2	0.000000011282530	2	0.000000003[illegible]8
3	0.000009605849750	3	0.000004630114880	3	0.000002231[illegible]6
4	0.000318876287790	4	0.000196533257007	4	0.000121125[illegible]64
5	0.004091968525854	5	0.003016671729467	5	0.002223943[illegible]92
6	0.030512908956587	6	0.025900842289434	6	0.021985895[illegible]370
7	0.160044559330312	7	0.152609674161337	7	0.145520177[illegible]391
8	0.655910588408299	8	0.690520392553108	8	0.726956418[illegible]283
9	2.23930239133350	9	2.56961217600395	9	2.94864452[illegible]257
10	6.64144080653924	10	8.225283887312[illegible]7	10	10.1868400242722
11	17.6147318303687	11	23.3610430485360	11	30.9819268082[illegible]67
12	42.6589834083558	12	60.1982328[illegible]4061	12	84.9487481375[illegible]75
13	95.8080502454839	13	143.098302140679	13	213.730725373[illegible]1
14	201.928331564546	14	317.798874[illegible]1657	14	500.158268355468
15	403.104193249714	15	669.948436663031	15	1100.18036954332
16	767.827504072569	16	1327.16642590631	16	2293.96669526[illegible]
17	1403.86990833516	17	2531.50659[illegible]2263	17	4564.89994[illegible]
18	2475.89[illegible]	18	4645.97271372430	18	8718.07415199327
19	[illegible]712	19	825[illegible]53778870672	19	16053.4689407200
20	702[illegible]16813779	20	14172.[illegible]327332781	20	28613.2722019508

Table 13 (Cont'd)

$$Q_n(s) = \frac{\beta_s^n}{\beta_s \, Ai(-\beta_s)}$$

s	10^{-18} Q_{18}	s	10^{-19} Q_{19}	s	10^{-20} Q_{20}
1	0.000000000000000	1	0.000000000000000	1	0.000000000000000
2	0.000000001190395	2	0.000000000386664	2	0.000000000125596
3	0.000001075731092	3	0.000000518513058	3	0.000000249928438
4	0.000074655825731	4	0.000046012679987	4	0.000028359028901
5	0.001639530842223	5	0.001208691198398	5	0.000891068576121
6	0.018662698328366	6	0.015841806718135	6	0.013447296616979
7	0.138760023662502	7	0.132313913614826	7	0.126167258220227
8	0.765315030259167	8	0.805697673525568	8	0.848211148949584
9	3.38358629114715	9	3.88268443151808	9	4.45540237416018
10	12.6161857878459	10	15.6248791042359	10	19.3510821041635
11	41.0889097185379	11	54.4930117583335	11	72.2698253819605
12	119.875442673108	12	169.162254549169	12	238.713348839856
13	319.226869118141	13	476.795246865427	13	712.138386287687
14	787.159154609569	14	1238.84692883909	14	1949.72224372501
15	1817.55340037077	15	3002.68979037555	15	4960.59481684903
16	3965.05147830536	16	6853.47056609179	16	11846.0148770530
17	8231.58489058748	17	14843.4775536473	17	26766.2702643777
18	16359.2904226779	18	30697.8787364792	18	57603.9506953945
19	31277.3293728865	19	60938.3140997408	19	118727.468098276
20	57766.2803765158	20	116622.215828814	20	235444.294118503

Table 13 (Cont'd)

$$Q_n(s) = \frac{\beta_s^n}{\beta_s \, Ai(-\beta_s)}$$

s	Q_{-1}	s	Q_{-2}	s	Q_{-3}
1	1.7986282	1	1.7654501	1	1.7328841
2	0.22619600	2	6.9637390×10^{-2}	2	0.0214388
3	0.11314622	3	2.3473837×10^{-2}	3	0.0048700
4	7.3553095×10^{-2}	4	1.1934030×10^{-2}	4	0.0019363
5	5.3752645×10^{-2}	5	7.2912849×10^{-3}	5	0.0009890
6	4.1995147×10^{-2}	6	4.9473068×10^{-3}	6	0.0005828
7	3.4259608×10^{-2}	7	3.5928678×10^{-3}	7	0.0003768
8	2.8809467×10^{-2}	8	2.7365500×10^{-3}	8	0.0002599
9	2.4776259×10^{-2}	9	2.1591404×10^{-3}	9	0.0001881
10	2.1679316×10^{-2}	10	1.7504794×10^{-3}	10	0.0001413
11	1.9231661×10^{-2}	11	1.4501089×10^{-3}	11	0.0001093
12	1.7251981×10^{-2}	12	1.2225475×10^{-3}	12	0.0000866
13	1.5620071×10^{-2}	13	1.0458046×10^{-3}	13	0.0000700
14	1.4253335×10^{-2}	14	9.0565217×10^{-4}	14	0.0000575
15	1.3093163×10^{-2}	15	7.9254021×10^{-4}	15	0.0000480
16	1.2096959×10^{-2}	16	6.9986540×10^{-4}	16	0.0000405
17	1.1232893×10^{-2}	17	6.2293026×10^{-4}	17	0.0000345
18	1.0476836×10^{-2}	18	5.5832399×10^{-4}	18	0.0000298
19	9.8101518×10^{-3}	19	5.0351794×10^{-4}	19	0.0000258
20	9.2181445×10^{-3}	20	4.5660075×10^{-4}	20	0.0000226
21	8.6892571×10^{-3}	21	4.1611384×10^{-4}	21	0.0000199
22	8.2140612×10^{-3}	22	3.8091745×10^{-4}	22	0.0000177
23	7.7849702×10^{-3}	23	3.5011869×10^{-4}	23	0.0000157
24	7.3957255×10^{-3}	24	3.2300556×10^{-4}	24	0.0000141
25	7.0411286×10^{-3}	25	2.9900507×10^{-4}	25	0.0000127

Table 13 (Concluded)

$$Q_n(s) = \frac{\beta_s^n}{\beta_s \, Ai(-\beta_s)}$$

s	Q_{-4}
1	1.7009188
2	0.0066002
3	0.0010103
4	0.0003142
5	0.0001341
6	0.0000687
7	0.0000395
8	0.0000247
9	0.0000164
10	0.0000114
11	0.0000082
12	0.0000061
13	0.0000047
14	0.0000036
15	0.0000029
16	0.0000023
17	0.0000019
18	0.0000016
19	0.0000013
20	0.0000011
21	0.0000010
22	0.0000008
23	0.0000007
24	0.0000006
25	0.0000005

s	Q_{-5}
1	1.6695431
2	0.0020320
3	0.0002096
4	0.0000510
5	0.0000182
6	0.0000081
7	0.0000041
8	0.0000023
9	0.0000014
10	0.0000009

s	Q_{-6}
1	1.6387462
2	0.0006256
3	0.0000435
4	0.0000083
5	0.0000025
6	0.0000009

s	Q_{-7}
1	1.6085174
2	0.0001926
3	0.0000090
4	0.0000013
5	0.0000003

s	Q_{-8}
1	1.5788462
2	0.0000593
3	0.0000019
4	0.0000002

s	Q_{-9}
1	1.5497223
2	0.0000182
3	0.0000004

s	Q_{-10}
1	1.5211356
2	0.0000056
3	0.0000000

Table 14

COMPUTATION OF $\left\{\exp\left[-i(5n-2)\frac{\pi}{6}\right] f^{(n)}(0)\right\}$

n	0	1	2	3	4	5	6
$\sum_{s=1}^{1} \frac{\alpha_s^n}{AP(-\alpha_s)}$	1.4261016287	3.334385801	7.79615215	18.2282411	42.619586	99.64917	232.9905
$\frac{\alpha_2^n}{2AP(-\alpha_2)}$	-0.6221786595	-2.545070085	-10.40411784	-42.5315077	-173.866653	-710.75309	-2905.5431
$E_1 \Delta f(2)$	-0.0223461426	0.322626232	3.60112133	27.3[illegible]93077	181.449029	1126.24181	6726.6050
$-E_2 \Delta^2 f(2)$	-0.0039298180	0.027521346	-0.11577850	-4.9161378	-66.222699	-671.93995	-5956.6708
$E_3 \Delta^3 f(2)$	-0.0009874523	0.005293328	-0.01367394	-0.1264170	5.607670	145.97897	2239.5509
$-E_4 \Delta^4 f(2)$	-0.0002945700	0.001356927	0.00280022	-0.0176358	0.361977	-3.39313	-281.5130
$E_5 \Delta^5 f(2)$	-0.0000973415	0.000405425	-0.00073000	-0.0037212	0.056457	-0.31382	-5.5643
$-E_6 \Delta^6 f(2)$	0.0000341388	0.000133339	-0.00021865	-0.0009666	0.012263	-0.05289	-0.6322
$E_7 \Delta^7 f(2)$	-0.0000127943	0.000046844	-0.00007170	-0.0002851	0.003199	-0.01174	-0.1129
$-E_8 \Delta^8 f(2)$	0.0000049311	0.000017268	-0.00002507	-0.0000917	0.000938	-0.00307	-0.0255
$E_9 \Delta^9 f(2)$	-0.0000019587	0.000006604	-0.00000949	-0.0000314	0.000299	-0.00089	-0.0067
$-E_{10} \Delta^{10} f(2)$	-0.0000007937	0.000002599	-0.00000349	-0.0000113	0.000101	-0.00028	-0.0019
$E_{11} \Delta^{11} f(2)$	-0.0000003282	0.000001017	-0.00000137	0.0000042	0.000036	-0.00009	-0.0006
$-E_{12} \Delta^{12} f(2)$	-0.0000001379	0.000000430	-0.00000055	-0.0000016	0.000013	-0.00003	-0.0002
$E_{13} \Delta^{13} f(2)$	-0.0000000587	0.000000180	-0.00000022	-0.0000000	0.000005	-0.00001	-0.0001
$-E_{14} \Delta^{14} f(2)$	-0.0000000253	0.000000076	-0.00000009	0.0000003	0.000002	-0.00000	-0.0000
$E_{15} \Delta^{15} f(2)$	-0.0000000110	0.000000033	-0.00000001	-0.0000001	0.000001	-0.00000	[illegible]
$-E_{16} \Delta^{16} f(2)$	-0.0000000048	[illegible]	-0.00000002	-0.0000000	0.000000	-0.00000	-0.0000
$E_{17} \Delta^{17} f(2)$	-0.0000000021	0.000000009	-0.00000001	-0.0000000	0.000000	-0.00000	-0.0000
$-E_{18} \Delta^{18} f(2)$	-0.0000000009	0.000000003	-0.00000000	-0.0000000	0.000000	-0.00000	-0.0000
$\exp\left[-i(5n-2)\frac{\pi}{6}\right] f^{(n)}(0)$	0.7758211623	1.146730417	0.86284538	-2.0192[illegible]	-9.977776	-11.59904	10.0751

Table 15

COMPUTATION OF $\left|\exp\left(-i\,\frac{5\pi n}{6}\right) g^{(n)}(0)\right|$

n	0	1	2	3	4	5	6
$\sum_{s=1}^{1} \frac{\beta_s^n}{\beta_s \Delta l(-\beta_s)}$	1.8324307	1.8668675	1.9015315	1.9376948	1.9741110	2.0112092	2.0490058
$\frac{\beta_2^n}{\beta_2 \Delta l(-\beta_2)}$	-0.3673648	-1.1932733	-3.8759876	-12.5899735	-40.8947215	-132.8341355	-431.4715178
$E_1 \Delta f(2)$	-0.0473383	0.0605550	1.2297357	8.9737837	53.1496275	288.3277213	1494.1693190
$-E_2 \Delta^2 f(2)$	-0.0121634	0.0096216	0.0461863	-1.1455271	-18.3940837	-182.4213125	-1504.0082425
$E_3 \Delta^3 f(2)$	-0.0038949	0.0024446	0.0085482	-0.0989164	0.5923093	32.8480041	545.4633958
$-E_4 \Delta^4 f(2)$	-0.0013933	0.0007534	0.0022583	-0.0192781	0.0701053	0.8511876	-46.2706320
$E_5 \Delta^5 f(2)$	-0.0005329	0.0002584	0.0007067	-0.0050064	0.0144100	0.1199234	-3.0174401
$-E_6 \Delta^6 f(2)$	-0.0002131	0.0000949	0.0002443	-0.0015160	0.0037659	0.0255750	-0.4752980
$E_7 \Delta^7 f(2)$	-0.0000880	0.0000365	0.0000902	-0.0005049	0.0011303	0.0067156	-0.1043127
$-E_8 \Delta^8 f(2)$	-0.0000372	0.0000145	0.0000348	-0.0001795	0.0003712	0.0020021	-0.0274980
$E_9 \Delta^9 f(2)$	-0.0000160	0.0000059	0.0000139	-0.0000669	0.0001299	0.0006504	-0.0081527
$-E_{10} \Delta^{10} f(2)$	-0.0000070	0.0000025	0.0000057	-0.0000258	0.0000476	0.0002248	-0.0026234
$E_{11} \Delta^{11} f(2)$	-0.0000031	0.0000010	0.0000024	-0.0000102	0.0000181	0.0000814	-0.0008067
$-E_{12} \Delta^{12} f(2)$	-0.0000013	0.0000004	0.0000010	-0.0000041	0.0000071	0.0000306	-0.0003211
$E_{13} \Delta^{13} f(2)$	-0.0000006	0.0000002	0.0000004	-0.0000017	0.0000028	0.0000118	-0.0001193
$-E_{14} \Delta^{14} f(2)$	-0.0000002	0.0000000	0.0000001	-0.0000007	0.0000011	0.0000046	-0.0000456
$E_{15} \Delta^{15} f(2)$	-0.0000001	0.0000000	0.0000000	-0.0000003	0.0000004	0.0000018	-0.0000179
$-E_{16} \Delta^{16} f(2)$	-0.0000000	0.0000000	0.0000000	-0.0000001	0.0000002	0.0000007	-0.0000072
$E_{17} \Delta^{17} f(2)$	-0.0000000	0.0000000	0.0000000	-0.0000000	0.0000000	0.0000003	-0.0000029
$-E_{18} \Delta^{18} f(2)$	-0.0000000	0.0000000	0.0000000	-0.0000000	0.0000000	0.0000001	-0.0000012
$\exp\left(-i\,\frac{5\pi n}{6}\right) g^{(n)}(0)$	1.3993766	0.7473831	-0.6862081	-2.9495352	-3.4327675	8.9376967	56.1846214

For the convenience of others who undertake computations of this type we list below the values of E_n .

Table 16

VALUES OF E_n

n	$E_n = \frac{1}{2^{n+1}}$
1	.25
2	.125
3	.0625
4	.03125
5	.015625
6	.0078125
7	.00390625
8	.001953125
9	.0009765625
10	.00048828125
11	.000244140625
12	.0001220703125
13	.00006103515625
14	.000030517578125
15	.000015258789062 5
16	.000007629394531 25
17	.000003814697265625
18	.000001907348632812 5

The series for $p^{(n)}(0)$ and $q^{(n)}(0)$ are not suitable for the Euler summation process since the signs of the terms are all positive. However, because of Olver's (Ref. 35) relations

$$\frac{da_s}{ds} = \frac{1}{\left[Ai'(-\alpha_s)\right]^2} \qquad \frac{da'_s}{ds} = \frac{1}{-\beta_s\left[Ai(-\beta_s)\right]^2} \tag{12.5}$$

we can write

$$p^{(n)}(0) = -\frac{\exp\left[i\frac{(5n-1)\pi}{6}\right]}{2\sqrt{\pi}} \sum_{s=1}^{\infty} (\alpha_s)^n \frac{d(\alpha_s)}{ds}$$

$$q^{(n)}(0) = -\frac{\exp\left[i\frac{(5n-1)\pi}{6}\right]}{2\sqrt{\pi}} \sum_{s=1}^{\infty} (\beta_s)^n \frac{d(\beta_s)}{ds} \tag{12.6}$$

This form is ideally suited for use in the Euler-Maclaurin summation formula (Ref. 36).

$$\sum_{s=N}^{\infty} f(s) = \frac{1}{2} f(N) + \int_N^{\infty} f(s)ds + R_M\left\{f(N)\right\}$$

$$R_M\left\{f(N)\right\} = -\frac{1}{12}\Delta f(N) + \frac{1}{24}\Delta^2 f(N) - \frac{19}{720}\Delta^3 f(N) + \frac{3}{160}\Delta^4 f(N) - \frac{863}{60480}\Delta^5 f(N) + \ldots \tag{12.7}$$

We find that

$$p^{(n)}(0) = -\frac{\exp\left[i\frac{(5n-1)\pi}{6}\right]}{2\sqrt{\pi}} \left[\sum_{s=1}^{N-1} \frac{(\alpha_s)^n}{\left[Ai'(-\alpha_s)\right]^2} + \frac{1}{2}\frac{(-a_N)^n}{\left[Ai'(a_N)\right]^2} - \frac{(-a_N)^{n+1}}{n+1} + R_M\left\{\frac{(-a_N)^n}{\left[Ai'(a_N)\right]^2}\right\}\right]$$

$$q^{(n)}(0) = -\frac{\exp\left[i\frac{(5n-1)\pi}{6}\right]}{2\sqrt{\pi}} \left[\sum_{s=1}^{N-1} \frac{(\beta_s)^{n-1}}{\left[Ai(-\beta_s)\right]^2} + \frac{1}{2}\frac{(-a'_N)^{n-1}}{\left[Ai(a'_N)\right]^2} - \frac{(-a'_N)^{n+1}}{n+1} + R_M\left\{\frac{(-a'_N)^{n-1}}{\left[Ai(a'_N)\right]^2}\right\}\right] \tag{12.8}$$

In Tables 17 and 18 we list values of

$$R_n(s) = \frac{\alpha_s^n}{[Ai'(-\alpha_s)]^2} \qquad \text{and} \qquad S_n(s) = \frac{\beta_s^n}{\beta_s[Ai(-\beta_s)]^2}$$

We have found it convenient to define constants M_n and N_n by means of

$$p^{(n)}(0) = c_n + i\,d_n - \frac{\exp\left(i\,\frac{5n-1}{6}\right)}{2\sqrt{\pi}} \sum_{s=1}^{\infty} \frac{\alpha_s^n}{[Ai'(-\alpha_s)]^2} = -i\,\frac{1}{2\sqrt{\pi}}\,\exp\left(i\,\frac{n\pi}{2}\right) M_n$$

$$q^{(n)}(0) = a_n + i\,b_n - \frac{\exp\left(i\,\frac{5n-1}{6}\right)}{2\sqrt{\pi}} \sum_{s=1}^{\infty} \frac{\beta_s^n}{\beta_s[Ai(-\beta_s)]^2} = -i\,\frac{\pi}{2\sqrt{\pi}}\,\exp\left(i\,\frac{n\pi}{2}\right) N_n \tag{12.9}$$

Details of the calculation of M_n and N_n by means of the Euler-Maclaurin summation formula are given in Tables 19 and 20. The coefficient of the nth difference has been denoted by M_n and should not be confused with the constants M_n which are the subject of this study. We designate these constants in the summation formula as Euler-Maclaurin coefficients. A table of these coefficients is given in Table 21.

Table 17

$$R_n(s) = \frac{\alpha_s^n}{\left[Ai'(-\alpha_s)\right]^2}$$

s	R_o	s	R_1	s	R_2
1	2.03377441209490	1	4.75518302412254	1	11.1181286667934
2	1.55041674937580	2	6.33802528878214	2	25.9095269561649
3	1.33586612406330	3	7.37472886021756	3	40.7126318888139
4	1.20532890587700	4	8.18021543671277	4	55.5167342828684
5	1.11427447893050	5	8.85194531334336	5	70.3210360750879
6	1.04566085201300	6	9.43463277872035	6	85.1253974918799
7	0.991316716567800	7	9.95299266204154	7	99.9297815471445
8	0.946748419182440	8	10.4223029820908	8	114.734175679217
9	0.909243828383500	9	10.8527484863620	9	129.538574837106
10	0.877051634311060	10	11.2514996173126	10	144.342976725458
11	0.848981307009500	11	11.6238182560194	11	159.147380199571
12	0.824190099187580	12	11.9736936989339	12	173.951784645250
13	0.802061603377530	13	12.3042306613845	13	188.756189712892
14	0.782132613438810	14	12.6178992035875	14	203.560595193554
15	0.764047056830580	15	12.9166998995913	15	218.365000957130
16	0.747525870788400	16	13.2022787407664	16	233.169406919740
17	0.732346668634210	17	13.4760081581256	17	247.973813025665
18	0.718329634742800	18	13.7390459000176	18	262.778219236879
19	0.705327505426430	19	13.9923786688534	19	277.582625526866
20	0.693218302572240	20	14.2368550576212	20	292.387031876720
21	0.681899965877930	21	14.4732108143344	21	307.191438272729
22	0.671286322090140	22	14.7020885019844	22	321.995844704788
23	0.661304013418650	23	14.9240529953933	23	336.800251165333
24	0.651890125651210	24	15.1396038407256	24	351.604657648627
25	0.642990334442190	25	15.3491852120233	25	366.409064150257

s	R_3	s	R_4	s	R_5
1	025.995379026274	1	60.77998833904	1	142.1101411431
2	105.916836318150	2	432.98267215089	2	1770.0112739375
3	224.756520101427	3	1240.78181597448	3	6849.8102487001
4	376.775869691907	4	2557.06784298188	4	17354.0730168274
5	558.639704565242	5	4437.90844013600	5	35255.3374958514
6	768.056740321100	6	6929.90780347246	6	62526.1385565751
7	1003.31242864713	7	10073.4317026691	7	101139.010512575
8	1263.05396143345	8	13904.3602313666	8	153066.467534860
9	1546.17444529514	9	18455.1622425210	9	220281.103748781
10	1851.74382425500	10	23755.6081248653	10	304755.393262461
11	2178.96461098493	11	29833.2700794123	11	408461.890176752
12	2527.14194713402	12	36713.8884719613	12	533373.128589097
13	2895.66248678568	13	44421.6491662162	13	651461.642595244
14	3283.97899261810	14	52979.3991499318	14	854699.966290011
15	3691.59878402966	15	62408.8179081626	15	1055060.63376764
16	4112.07487107893	16	72730.5561558195	16	1284516.17912218
17	4562.99901461625	17	83964.3499180049	17	1545039.13644743
18	5025.99820140363	18	96129.1156114283	18	1838602.03983705
19	5506.72018088705	19	109243.030225801	19	2167177.42338469
20	6004.84981153994	20	123323.599640200	20	2532737.82118393
21	6520.08603748150	21	138387.717363460	21	2937255.76732824
22	7052.14935913043	22	154451.715453285	22	3382703.79591110
23	7600.77769881483	23	171531.408978792	23	3871054.44102616
24	8165.72458439462	24	189642.135101696	24	4404280.23676680
25	8746.75759195544	25	208798.787633312	25	4984353.71722635

Table 17 (Cont'd)

$$R_n(s) = \frac{\alpha_s^n}{\left[Ai'(-\alpha_s)\right]^2}$$

s	R_6	s	R_7	s	R_8
1	332.268774108	1	776.88008300	1	1816.4290791
2	7235.716603398	2	29579.24366675	2	120918.4527053
3	37814.787289051	3	208758.79561591	3	1152465.4208388
4	117777.027738998	4	799318.30698086	4	5424740.0205294
5	280073.110726074	5	2224938.20576642	5	17675206.3297133
6	564151.517403598	6	5090142.16991518	6	45926575.5930121
7	1015453.29827892	7	10195328.1504304	7	102362872.099715
8	1685036.14811458	8	18549761.3891883	8	204205499.081331
9	2629278.68263232	9	31383111.2759848	9	374589304.612931
10	3909638.90439593	10	50155884.6888142	10	643438647.515277
11	5592451.49065643	11	76568988.2642702	11	1048343463.25743
12	7748754.11298878	12	112572582.091620	12	1635435329.85932
13	10454136.1936149	13	160374343.504411	13	2460263533.79439
14	13788605.4598089	14	222447230.636440	14	3588671135.89219
15	17836468.9195721	15	301536815.360819	15	5097671037.24060
16	22686225.7301001	16	400668240.884885	16	7076322045.08969
17	28430470.0207335	17	523152848.709299	17	9626604938.75274
18	35165802.1546500	18	672594511.691930	18	12864298535.5102
19	42992747.2235117	19	852895703.821973	19	16919855756.5115
20	52015679.8015203	20	1068263332.50298	20	21939279692.6787
21	62342754.1625238	21	1323214355.31785	21	28084999670.6073
22	74085839.3012300	22	1622581200.16368	22	35536747318.4704
23	87360458.2076341	23	1971517005.12501	23	44492432631.9231
24	102285730.929851	24	2375500692.37519	24	55169020040.0002
25	118984321.029958	25	2840341888.66481	25	67803404471.0205

s	R_9	s	$10^{-10}\,R_{10}$	s	$10^{-11}\,R_{11}$
1	4247.006290	1	0.000000992995687	1	0.000000232173057
2	494308.521521	2	0.000202070824578	2	0.000082605531501
3	6362254.305552	3	0.003512320553535	3	0.001938997575124
4	36816126.983863	4	0.024986030684649	4	0.016957289658629
5	140414200.263166	5	0.111546916441933	5	0.088614360544612
6	414379456.465319	6	0.373880115348378	6	0.337338974450206
7	1027741081.98374	7	1.03186996410982	7	1.03601543374797
8	2248001199.59279	8	2.47471758405386	8	2.72429886689328
9	4471103769.68180	9	5.33671641797664	9	6.36991302215478
10	8254530753.13533	10	10.5895532359978	10	13.5851014377203
11	14353383032.3239	11	19.6519186405241	12	26.9064028587588
12	23759326369.3217	12	34.5171453262236	12	50.1459217720092
13	37742300441.9156	13	57.8995389347941	13	88.8222649284700
14	57894901567.1677	14	93.4000219175484	14	150.679314724764
15	86179360794.8884	15	145.691673173084	15	246.301010313733
16	124977047282.889	16	220.725713838699	16	389.830307314948
17	177140433958.171	17	325.958461394539	17	599.800486995444
18	246047468324.466	18	470.599749389897	18	900.086985791645
19	335658296246.866	19	665.883288017926	19	1320.98791604262
20	450574290803.193	20	925.359420986591	20	1900.44144880574
21	596099341975.884	21	1265.21071629550	21	2685.38822962455
22	778303266173.243	22	1704.59081234414	22	3733.28699812060
23	1004087997395.03	23	2265.98692603152	23	5113.79158227871
24	1281254424359.15	24	2975.60641597341	24	6910.59743829628
25	1618573340134.73	25	3863.78778150382	25	9223.46590886804

Table 17 (Cont'd)

$$R_n(s) = \frac{\alpha_s^n}{[Ai'(-\alpha_s)]^2}$$

s	10^{-12} R_{12}	s	10^{-13} R_{13}	s	10^{-14} R_{14}
1	0.000000054284554	1	0.000000012692311	1	0.000000002967598
2	0.000033768723658	2	0.000013804483510	2	0.000005643203069
3	0.001070436212000	3	0.000590940162994	3	0.000326232052463
4	0.011508417491190	4	0.007810427009138	4	0.005300708816983
5	0.070396431790369	5	0.055923865819933	5	0.044426666078177
6	0.304569178568832	6	0.274621682874476	6	0.247781556133332
7	1.04017755753744	7	1.04435640238518	7	1.04855203546695
8	2.99905102868274	8	3.30151261373899	8	3.63447818474273
9	7.60313809689010	9	9.07511746539150	9	10.8320743305110
10	17.4280233509549	10	22.3580220813132	10	28.6826073916811
11	36.8388719717657	11	50.4379011670960	11	69.0569970788335
12	72.8511424278776	12	105.836900898476	12	153.758049887595
13	136.260061689062	13	209.033224118515	13	320.672750648614
14	243.066194411896	14	392.163304044723	14	632.664711426112
15	416.387473356117	15	703.929422567310	15	1190.03731779451
16	688.491004778542	16	1215.96462554667	16	2147.55161696913
17	1103.70082942721	17	2030.93453121449	17	3737.14956091863
18	1721.54061501691	18	3292.68408046825	18	6297.71285045318
19	2620.59293638479	19	5198.76640572358	19	10313.3803233462
20	3902.99987056726	20	8015.72076804624	20	16462.1525908350
21	5699.69085064391	21	12097.4969036249	21	25676.7314523175
22	8176.40908856676	22	17907.4541060561	22	39219.7735077804
23	11540.6068969617	23	26044.3949283022	23	58775.9823413687
24	16049.2855163321	24	37273.1254981409	24	86563.7216676340
25	22017.8560899238	25	52560.0670823329	25	125469.102914320

s	10^{-15} R_{15}	s	10^{-16} R_{16}	s	10^{-17} R_{17}
1	0.000000000693856	1	0.000000000162231	1	0.000000000037931
2	0.000002306912885	2	0.000000943054324	2	0.000000385515840
3	0.000180098356346	3	0.000099424375115	3	0.000054887821119
4	0.003597436341133	4	0.002441475031989	4	0.001656957835130
5	0.035293137015544	5	0.028037339516004	5	0.022273237054260
6	0.223564646888856	6	0.201714675202861	6	0.182000018408540
7	1.05276452422836	7	1.05699393638600	7	1.06124033992851
8	4.00102414281284	8	4.40453715159784	8	4.84874542800606
9	12.9291807791111	9	15.4322902999365	9	18.4200057196422
10	36.7962766917975	10	47.2051219015749	10	60.5583970467120
11	94.5493118309426	11	129.452086622006	11	177.239182457034
12	223.377080248356	12	324.518423697218	12	471.454847569135
13	491.936214648091	13	754.667301143627	13	1157.71662759737
14	1020.65805993474	14	1646.59551338262	14	2656.40069982413
15	2011.83353379171	15	3401.13213860388	15	5749.82951121328
16	3792.85535997668	16	6698.67567700499	16	11830.7321442338
17	6876.77846135323	17	12654.0512322732	17	23284.8874642219
18	12045.2452095322	18	23038.1942783113	18	44063.7269206662
19	20459.8178477266	19	40588.4524024162	19	80519.8990863088
20	33808.8708134965	20	69434.4035129442	20	142599.746019135
21	54498.4258584005	21	115671.982104073	21	245511.814940296
22	85896.6676609488	22	188125.449367824	22	412020.462068934
23	132643.361832561	23	299344.404591266	23	675548.865183415
24	201037.015512030	24	466891.681958444	24	1084316.94594541
25	299514.377739745	25	714987.677357404	25	1706787.44249511

Table 17 (Concluded)

$$R_n(s) = \frac{\alpha_s^n}{\left[Ai'(-\alpha_s)\right]^2}$$

s	10^{-18} R_{18}	s	10^{-19} R_{19}	s	10^{-20} R_{20}
1	0.000000000008868	1	0.000000000002073	1	0.000000000000484
2	0.000000157596926	2	0.000000064424826	2	0.000000026336543
3	0.000030301150032	3	0.000016727931161	3	0.000009234754477
4	0.001124528914458	4	0.000763184948127	4	0.000517951346167
5	0.017694157057665	5	0.014056474737759	5	0.011166651308074
6	0.164212262140188	6	0.148162990712821	6	0.133682293458858
7	1.06550380311765	7	1.06978439448942	7	1.07408218285518
8	5.33775318868199	8	5.87607857049350	8	6.46869537539235
9	21.9861474944550	9	26.2426998669423	9	31.3233274033162
10	77.6890156223675	10	99.6655037569256	10	127.858649765950
11	242.666832322018	11	332.247027394622	11	454.895653255481
12	684.921585542453	12	995.042432506107	12	1445.58072542495
13	1776.02473008214	13	2724.55604996315	13	4179.67472167321
14	4285.48761409531	14	6913.64224221904	14	11153.5613581480
15	9720.45132641929	15	16433.0392414276	15	27781.0946880978
16	20894.6110869395	16	36902.5996998264	16	65174.7887979041
17	42846.8301786762	17	78843.0203573529	17	145080.087211763
18	84277.9606197867	18	161193.234040764	18	308304.312413799
19	159736.421694250	19	316887.188200933	19	628644.920055250
20	292861.845654524	20	601460.122016385	20	1235238.67565428
21	521094.652126271	21	1106014.53759214	21	2347497.04755891
22	902381.159667455	22	1976338.14892073	22	4328450.82926911
23	1524552.52963133	23	3440551.13611099	23	7764502.62626056
24	2518235.56661485	24	5848391.83107564	24	13582401.6876112
25	4074368.64454212	25	9726155.37138016	25	23217854.4852458

Table 18

$$S_n(s) = \frac{\beta_s^n}{\beta_s\left[Ai(-\beta_s)\right]^2}$$

s	S_0	s	S_1		S_2
1	3.42090527093745	1	3.48519424670285	1	3.5506914033670
2	1.75346632551597	2	5.69560507897474	2	18.5004506465769
3	1.43366682592260	3	6.91041633672266	3	33.3088923335535
4	1.26661171013518	4	7.80651726981529	4	48.1139653109793
5	1.15767665395375	5	8.53459749697771	5	62.9185655482067
6	1.07867166996060	6	9.15629016082348	6	77.7230475629854
7	1.01762666406664	7	9.70352720960537	7	92.5274893360947
8	0.968423104033338	8	10.1952295598303	8	107.331914474915
9	0.927545444958618	9	10.6486365110267	9	122.136331750209
10	0.892802723165511	10	11.0571727842123	10	136.940744923402
11	0.862744993984072	11	11.4419130182971	11	151.745155788981
12	0.836367256442753	12	11.8023[illegible]51873226	12	166.549565276592
13	0.812946786820366	13	12.1421221522247	13	181.353973900537
14	0.791948015215901	14	12.4638373409639	14	196.158381961038
15	0.772964029156273	15	12.7697552005989	15	210.962789641347
16	0.755679076665912	16	13.0616823959993	16	225.767197057629
17	0.739843677652785	17	13.3411161622160	17	240.571604285943
18	0.725257605889135	18	13.6093127898938	18	255.376011377507
19	0.711757950434424	19	13.8673379141378	19	270.180418367666
20	0.699210551030022	20	14.1161041622739	20	284.984825281351

s	S_3	s	S_4	s	S_5
1	3.617419446239	1	3.68540150732	1	3.7546611533
2	60.093119059448	2	195.19432403454	2	634.0297313842
3	160.552165662199	3	773.87736706140	3	3730.1656865217
4	296.541156310142	4	1827.67428993613	4	11264.5183948765
5	463.846817854721	5	3419.56096041486	5	25209.6095346197
6	659.751058165935	6	5600.28810499744	6	47537.9712859592
7	882.291160513919	7	8413.04241049295	7	80222.1372812183
8	1129.95394534718	8	11895.7714008173	8	125234.641467642
9	1401.52132383917	9	16082.5365640847	9	184548.017882888
10	1695.98214535924	10	21004.3799527030	10	260134.800596065
11	2012.47748244544	11	26689.9170276117	11	353967.523688858
12	2350.26451858038	12	33165.7623850564	12	468018.721248631
13	2708.69156455411	13	40456.8470934668	13	604260.927365345
14	3087.18011644051	14	48586.6623494002	14	764666.676130465
15	3485.21157329407	15	57577.4511290508	15	951208.501636212
16	3902.31715348323	16	67450.3619871862	16	1165858.93797522
17	4338.07007487289	17	78225.5745866814	17	1410590.51924046
18	4792.07937931402	18	89922.4036501233	18	1687375.77952500
19	5263.98497832129	19	102559.386129473	19	1998187.25292200
20	5753.45362339401	20	116154.355109488	20	2344997.47352482

Table 18 (Cont'd)

$$S_n(s) = \frac{\beta_s^n}{\beta_s\left[Ai(-\beta_s)\right]^2}$$

s	S_6	s	S_7	s	S_8
1	3.825222393	1	3.89710968	1	3.9703479
2	2059.453840512	2	6689.51298536	2	21728.8599050
3	17979.768683169	3	86664.26884692	3	417730.3739064
4	69426.689080879	4	427898.02348987	4	2637267.035[illegible]87
5	185849.710019759	5	1370117.00506489	5	10100745.4214935
6	403525.438623075	6	3425320.33259146	6	29075786.2029706
7	764954.102922387	7	7294180.87586643	7	69553290.1210595
8	1318427.77530606	8	13879959.8763382	8	146123503.901484
9	2117698.95680265	9	24300715.4619724	9	278852086.160221
10	3221714.45353455	10	39900251.7015419	10	494156173.306973
11	4694394.80447998	11	62258091.7895160	11	825680445.448000
12	6604447.10711363	12	93198668.3658527	12	1315173192.28925
13	9025203.26156089	13	134799869.102310	13	2013362379.03825
14	12034478.1326933	14	189401040.279627	14	2980831712.30761
15	15714443.6900662	15	259610527.096302	15	4288896706.01735
16	20151616.2144708	16	348312812.566620	16	6020480747.29721
17	25436254.3641814	17	458675304.600601	17	8270991162.39021
18	31663266.3913862	18	594154811.712487	18	11149195282.5542
19	38931125.1600065	19	758503740.831967	19	14778096509.9646
20	47342289.8836153	20	955776045.274508	20	19295810383.6192

s	S_9	s	$10^{-10}\ S_{10}$	s	$10^{-11}\ S_{11}$
1	4.044962	1	0.000000000412097	1	0.000000000041984
2	70579.680206	2	0.000022925658418	2	0.000007446706824
3	2013501.845751	3	0.000970527865841	3	0.000467804060056
4	16254287.319537	4	0.010018016859718	4	0.006174411700042
5	74464485.655362	5	0.054896538745729	5	0.040470701432211
6	246809425.465109	6	0.209503853389161	6	0.177837068021990
7	663221854.378492	7	0.632411820288661	7	0.603023069251929
8	1538338625.08830	8	1.61951066204520	8	1.70496582592635
9	3199843481.05264	9	3.67183851633515	9	4.21345549239397
10	6120019629.04797	10	7.57951479373008	10	9.38706866816208
11	10950354859.8964	11	14.5226003859879	11	19.2601906211732
12	18559069094.4899	12	26.1896340096854	12	36.9575071933381
13	30071454047.5551	13	44.9145349068349	13	67.0840672588398
14	46912929749.3858	14	73.8325135425724	14	116.199096605888
15	70854734438.6501	15	117.055591134381	15	193.381734112396
16	104062173772.731	16	179.868293992428	16	310.896861086180
17	149145363009.908	17	268.944058464319	17	484.969194640357
18	209212402219.306	18	392.582855830519	18	736.673815974298
19	287924929965.782	19	560.970523097493	19	1092.95130443089
20	389556005511.366	20	786.460264756747	20	1587.75564820090

Table 18 (Cont'd)

$$S_n(s) = \frac{\beta_s^n}{\beta_s\left[Ai(-\beta_s)\right]^2}$$

s	10^{-12} S_{12}	s	10^{-13} S_{13}	s	10^{-14} S_{14}
1	0.000000000004277	1	0.000000000000435	1	0.000000000000044
2	0.000002418837510	2	0.000000785686215	2	0.000000255206406
3	0.000225486198086	3	0.000108686584552	3	0.000052388012046
4	0.003805479704761	4	0.002345434105609	4	0.001445563127527
5	0.029835718459437	5	0.021995420501467	5	0.016215413873613
6	0.150956759272163	6	0.128139444849236	6	0.108770997770739
7	0.575019110878440	7	0.548306543595701	7	0.522834911157274
8	1.79493012037706	8	1.88964147435996	8	1.98935037140675
9	4.83496403978691	9	5.54814861773950	9	6.36653195995256
10	11.6256858887170	10	14.3981659409313	10	17.8318238121151
11	25.5432865261406	11	33.8760658910224	11	44.9271803406531
12	52.1525935582191	12	73.5951426761564	12	103.853800089108
13	100.196341547860	13	149.652626470000	13	223.520223028019
14	182.876478182462	14	287.814684014727	14	452.968545532945
15	319.476367817286	15	527.791055666118	15	871.937415416185
16	537.375743594411	16	928.837585541267	16	1605.46744172601
17	874.513164905334	17	1576.95227664900	17	2843.61469057776
18	1382.35356710639	18	2593.95860563401	18	4867.51103903714
19	2129.42125240613	19	4148.79862608335	19	8083.19632404435
20	3205.46137085971	20	6471.38784341062	20	13064.8464525438

s	10^{-15} S_{15}	s	10^{-16} S_{16}	s	10^{-17} S_{17}
1	0.000000000000004	1	0.000000000000000	1	0.000000000000000
2	0.000000082896083	2	0.000000026926285	2	0.000000008746189
3	0.000025251541554	3	0.000012171493552	3	0.000005866780647
4	0.000890944985692	4	0.000549116778379	4	0.000338437547928
5	0.011954290534023	5	0.008812914877516	5	0.006497037061069
6	0.092330117162300	6	0.078374297468267	6	0.066527918434750
7	0.498546565817380	7	0.475386537861734	7	0.453302411199334
8	2.09432051207314	8	2.20482951134879	8	2.32116963286696
9	7.30563147993173	9	8.38325349755524	9	9.61983086572674
10	22.0843364197085	10	27.3509832890735	10	33.8736139797063
11	59.5834103007953	11	79.0208233891873	11	104.799146231846
12	146.553310459752	12	206.808732933067	12	291.838184229394
13	333.848401334345	13	498.633875555532	13	744.756424945478
14	712.891018554608	14	1121.96224075091	14	1765.76676786172
15	1440.48454069219	15	2379.75303649836	15	3931.47191430589
16	2775.00151432851	16	4796.50549390571	16	8290.61347688478
17	5127.70400741145	17	9246.45257838401	17	16673.5219429065
18	9133.78635406462	18	17139.3659906726	18	32161.6748164360
19	15748.6705674905	19	30683.4839462673	19	59781.3118920848
20	26376.1370758127	20	53249.8112066678	20	107504.081639991

Table 18 (Concluded)

$$S_n(s) = \frac{\beta_s^n}{\beta_s\left[Ai(-\beta_s)\right]^2}$$

s	10^{-18} S_{18}		10^{-19} S_{19}		10^{-20} S_{20}
1	0.000000000000000	1	0.000000000000000	1	0.000000000000000
2	0.000000002840935	2	0.000000000922791	2	0.000000000299741
3	0.000002827846476	3	0.000001363050057	3	0.000000657003650
4	0.000208589462857	4	0.000128560097073	4	0.000079235539193
5	0.004789730884681	5	0.003531074508585	5	0.002603170717806
6	0.056472135307532	6	0.047936297139975	6	0.040690662235071
7	0.432244204733653	7	0.412164259244740	7	0.393017129526223
8	2.44364856185536	8	2.57259021887266	8	2.70833561648257
9	11.0388103988715	9	12.6670974493300	9	14.5355660612875
10	41.9517540528257	10	51.9563595771966	10	64.3468517935099
11	138.986922432229	11	184.327499810417	11	244.459166314201
12	411.827511180944	12	581.150473552076	12	820.090605266563
13	1112.36351898397	13	1661.41916594676	13	2481.48523200086
14	2778.99929715819	14	4373.64505560255	14	6883.33066221275
15	6494.98967998760	15	10730.0501854388	15	17726.5835135638
16	14330.0725727167	16	24769.0934466879	16	42812.6226896314
17	30066.2693745379	17	54216.5330874717	17	97765.1208870703
18	60350.7345348181	18	113246.936911095	18	212505.594481977
19	116473.255051386	19	226927.424522805	19	442127.731193173
20	217036.028999305	20	438166.041374418	20	884597.274926842

Table 19

COMPUTATION OF $\left\{\exp\left[-i(n+1)\pi/3\right]M_n\right\}$

n	0	1	2	3	4	5	6
$-\sum_{s=1}^{1}\frac{\alpha_s^n}{[A'(-\alpha_s)]^2}$	-2.033774	-4.7551830	-11.11812867	-25.9953790	-60.779998	-142.11014	-332.2688
$-\frac{\alpha_2^n}{2[A'(-\alpha_2)]^2}$	-0.775208	-3.1690126	-12.95476348	-52.9584182	-216.491336	-885.00564	-3617.8585
$\frac{\alpha_2^{n+1}}{n+1}$	4.087949	8.3556653	22.77169162	69.8171431	228.327161	777.82491	2725.4648
$-M_1\Delta f(2)$	-0.017879	0.0863920	1.23359208	9.9033070	67.316595	423.31658	2548.2559
$M_2\Delta^2 f(2)$	-0.003500	0.0096340	-0.00004156	-1.3824861	-21.186953	-226.01932	-2057.6321
$-M_3\Delta^3 f(2)$	-0.001175	0.0025718	-0.00002100	-0.0880117	1.479564	52.05308	869.5316
$M_4\Delta^4 f(2)$	-0.000515	0.0009890	-0.00001234	-0.0195731	0.177440	0.00006	-121.8339
$-M_5\Delta^5 f(2)$	-0.000266	0.0004673	-0.00000753	-0.0056600	0.046019	0.	..2093
$M_6\Delta^6 f(2)$	-0.000153	0.0002522	-0.00000542	-0.0028664	0.016736	0.00002	-1.4700
$-M_7\Delta^7 f(2)$	-0.000095	0.0001494	-0.00000389	-0.0014315	0.007429	0.00002	-0.4595
$M_8\Delta^8 f(2)$	-0.000062	0.0000948	-0.00000289	-0.0007938	0.003767	0.00001	-0.1823
$-M_9\Delta^9 f(2)$	-0.000043	0.0000634	-0.00000221	-0.0004756	0.002103	0.00001	-0.0845
$M_{10}\Delta^{10} f(2)$	-0.000031	0.0000443	-0.00000173	-0.0003025	0.001261	0.00001	-0.0438
$-M_{11}\Delta^{11} f(2)$	-0.000023	0.0000320	-0.00000139	-0.0002018	0.000801	0.00001	-0.0246
$M_{12}\Delta^{12} f(2)$	-0.000017	0.0000237	-0.00000113	-0.0001398	0.000532	0.00000	-0.0148
$-M_{13}\Delta^{13} f(2)$	-0.000013	0.0000181	-0.00000093	-0.0001001	0.000367	0.00000	-0.0093
$M_{14}\Delta^{14} f(2)$	-0.000010	0.0000140	-0.00000077	-0.0000736	0.000261	0.00000	-0.0062
$-M_{15}\Delta^{15} f(2)$	-0.000008	0.0000111	-0.00000065	-0.0000554	0.000191	0.00000	-0.0042
$M_{16}\Delta^{16} f(2)$	-0.000007	0.0000089	-0.00000056	-0.0000425	0.000143	0.00000	-0.0030
$-M_{17}\Delta^{17} f(2)$	-0.000005	0.0000072	-0.00000049	-0.0000332	0.000109	0.00000	-0.0021
$M_{18}\Delta^{18} f(2)$	-0.000004	0.0000059	-0.00000041	-0.0000263	0.000084	0.00000	-0.0016
$\exp\left[-i(n+1)\pi/3\right]M_n$	1.255161	0.5322169	-0.0071380	-0.7360265	1.077714	0.05965	4.1440

Table 20

COMPUTATION OF $\left\{\exp\left[-i(n+1)\pi/3\right] N_n\right\}$

n	0	1	2	3	4	5	6
$-\sum_{s=1}^{1} \frac{\beta_s^n}{\beta_s[Ai(-\beta_s)]^2}$	-3.42691	-3.48519	-3.550691	-3.61742	-3.68540	-3.754661	-3.8252
$-\frac{\beta_2^n}{2\beta_2[Ai(-\beta_2)]^2}$	-0.87673	-2.84780	-9.250225	-30.04656	-97.59716	-317.014866	-1029.7269
$\frac{\beta_2^{n+1}}{n+1}$	3.24820	5.27539	11.423681	27.82978	72.31730	195.750726	545.0032
$-N_1 \Delta f(2)$	-0.02665	0.10123	1.234037	8.37159	48.22359	258.011329	1326.6929
$N_2 \Delta^2 f(2)$	-0.00636	0.01328	0.000140	1.48041	-19.79641	-184.925698	-1480.2752
$-N_3 \Delta^3 f(2)$	-0.00250	0.00398	0.000076	-0.11118	1.66186	52.052655	777.1394
$N_4 \Delta^4 f(2)$	-0.00124	0.00167	0.000048	-0.02803	0.22922	-0.000197	-128.0083
$-N_5 \Delta^5 f(2)$	-0.00072	0.00085	0.000032	-0.01056	0.06651	-0.000129	-8.6113
$N_6 \Delta^6 f(2)$	-0.00045	0.00048	0.000023	-0.00193	0.02656	-0.000099	-1.9519
$-N_7 \Delta^7 f(2)$	-0.00031	0.00030	0.000017	-0.00264	0.01277	-0.000065	-0.6676
$N_8 \Delta^8 f(2)$	-0.00022	0.00020	0.000013	-0.00156	0.00694	-0.000049	-0.2864
$-N_9 \Delta^9 f(2)$	-0.00016	0.00014	0.000011	-0.00099	0.00412	-0.000018	-0.1422
$N_{10} \Delta^{10} f(2)$	-0.00012	0.00010	0.000009	-0.00066	0.00261	-0.000030	-0.0783
$N_{11} \Delta^{11} f(2)$	-0.00009	0.00007	0.000007	-0.00046	0.00174	-0.000024	-0.0460
$N_{12} \Delta^{12} f(2)$	-0.00008	0.00006	0.000006	-0.00033	0.00121	-0.000020	-0.0294
$-N_{13} \Delta^{13} f(2)$	-0.00006	0.00004	0.000005	-0.00024	0.00087	-0.000017	-0.0194
$N_{14} \Delta^{14} f(2)$	-0.00005	0.00003	0.000004	-0.00019	0.00064	-0.000014	-0.0134
$-N_{15} \Delta^{15} f(2)$	-0.00004	0.00003	0.000004	-	0.00049	-0.000012	-0.0095
$N_{16} \Delta^{16} f(2)$	-0.00004	0.00002	0.000003		0.00038	0.000011	0.0069
$-N_{17} \Delta^{17} f(2)$	-0.00003	0.00002	0.000003	-	0.00029	-0.000010	-0.0052
$N_{18} \Delta^{18} f(2)$	-0.00003	0.00002	0.000002	-	0.00023	-0.000010	-0.0040
$\exp[-i(n+1)\pi/3] N_n$	-1.08850	-0.93508	-0.142795	0.89521	1.17836	0.118769	-1.8722

Table 21

TABLE OF EULER-MACLAURIN COEFFICIENTS

n	M_n
1	.08333 33333
2	.04166 66667
3	.02638 88889
4	.01875 00000
5	.01426 91799
6	.01136 73942
7	.00935 65365
8	.00789 25540
9	.00678 58499
10	.00592 405641
11	.00523 669356
12	.00467 750008
13	.00421 495756
14	.00382 66996
15	.00349 737552
16	.00321 454227
17	.00296 952272
18	.00275 423323
19	.00256 634140
20	.00239 979050
21	.00225 132691
22	.00211 82496
23	.00199 83013

We have shown that we can use the Euler-Maclaurin formula in the form

$$\sum_{s=1}^{\infty} f(s) = \sum_{s=1}^{N} f(s) - \frac{1}{2} f(N) + \int_{N}^{\infty} f(s)\, ds - \frac{1}{12} f'(N) + \frac{1}{720} f'''(N) - \frac{1}{30240} f^{(5)}(N)$$

$$+ \frac{1}{1209600} f^{(7)}(N) + \ldots . \qquad (12.10)$$

and use Olver's relations to arrive at

$$
\begin{aligned}
M_n = \exp\left[i(n+1)\frac{\pi}{3}\right] \lim_{N\to\infty} \Bigg\{ & -\sum_{s=1}^{N} \frac{\alpha_s^n}{\left[Ai'(-\alpha_s)\right]^2} + \frac{1}{2}\frac{\alpha_N^n}{\left[Ai'(-\alpha_s)\right]^2} + \frac{\alpha_N^{n+1}}{n+1} \\
& + \frac{\pi^2}{12}\left(n-\frac{1}{2}\right)\alpha_N^{n-2} - \frac{\pi^2}{6}(n-2)\left[\frac{1\cdot 3\cdot 5}{1!(96)} + \frac{\pi^2}{120}\left(n-\frac{1}{2}\right)\left(n-\frac{7}{2}\right)\right]\alpha_N^{n-5} \\
& + \frac{\pi^2}{12}\left(n-\frac{7}{2}\right)\left[\frac{472}{231}\frac{1\cdot 3\cdot 5\cdot 7\cdot 9\cdot 11}{2!(96)^2} + \frac{\pi^2}{15}(n-2)(n-5)\frac{1\cdot 3\cdot 5}{1!(96)} + \frac{\pi^4}{2520}\right. \\
& \left.\left(n-\frac{1}{2}\right)(n-2)(n-5)\left(n-\frac{13}{2}\right)\right]\alpha_N^{n-8} - \frac{\pi^2}{12}\left[\frac{448}{221}(n-5)\frac{1\cdot 3\cdot 5\cdot 7\cdot 9\cdot 11\cdot 13\cdot 15\cdot 17}{3!(96)^3}\right. \\
& + \frac{\pi^2}{15}\left(\frac{118}{231}\left(n-\frac{7}{2}\right)(n-8)\left(n-\frac{19}{2}\right) + \frac{5}{231}(n-2)(n-5)\left(n-\frac{19}{2}\right) + \frac{41}{77}\right. \\
& \left.(n-2)\left(n-\frac{13}{2}\right)\left(n-\frac{28}{41}\right)\right)\frac{1\cdot 3\cdot 5\cdot 7\cdot 9\cdot 11}{2!\,(96)^2} + \frac{\pi^4}{420}(n-2)\left(n-\frac{7}{2}\right)(n-5)\left(n-\frac{13}{2}\right) \\
& (n-8)\frac{1\cdot 3\cdot 5}{1!(96)} + \frac{\pi^6}{100800}\left(n-\frac{1}{2}\right)(n-2)\left(n-\frac{7}{2}\right)(n-5)\left(n-\frac{13}{2}\right)(n-8)\left(n-\frac{19}{2}\right)\Bigg] \\
& \alpha_N^{n-11} + \ldots \Bigg\}
\end{aligned}
\tag{12.11}
$$

and

$$N_n = \exp\left[i(n+1)\frac{\pi}{3}\right] \lim_{N\to\infty} \left\{ -\sum_{s=1}^{N} \frac{\beta_s^n}{\beta_s\left[Ai(-\beta_s)\right]^2} + \frac{1}{2}\frac{\beta_N^n}{\beta_N\left[Ai(-\beta_s)\right]^2} \right.$$

$$+ \frac{\beta_N^{n+1}}{n+1} + \frac{\pi^2}{12}\left(n-\frac{1}{2}\right)\beta_N^{n-2} + \frac{\pi^2}{6}(n-2)\left[\frac{1\cdot 3\cdot 7}{1!(96)} - \frac{\pi^2}{120}\left(n-\frac{1}{2}\right)\left(n-\frac{7}{2}\right)\right]$$

$$\beta_N^{n-5} - \frac{\pi^2}{12}\left(n-\frac{7}{2}\right)\left[\frac{376}{15}\frac{1\cdot 3\cdot 5\cdot 7\cdot 9}{2!(96)^2} + \frac{\pi^2}{15}7(n-2)(n-5)\frac{1\cdot 3}{1!(96)} - \frac{\pi^4}{2520}\right.$$

$$\left.\left(n-\frac{1}{2}\right)(n-2)(n-5)\left(n-\frac{13}{2}\right)\right]\beta_N^{n-8} + \frac{\pi^2}{12}\left[\frac{2048}{55}(n-5)\frac{1\cdot 3\cdot 5\cdot 7\cdot 9\cdot 11\cdot 13\cdot 15}{3!(96)^3}\right.$$

$$+ \frac{\pi^2}{15}\left(\frac{94}{15}\left(n-\frac{7}{2}\right)(n-8)\left(n-\frac{19}{2}\right) - \frac{7}{15}(n-2)(n-5)\left(n-\frac{19}{2}\right) + \frac{29}{5}(n-2)\right.$$

$$\left.\left(n-\frac{13}{2}\right)\left(n-\frac{4}{29}\right)\right)\frac{1\cdot 3\cdot 5\cdot 7\cdot 9}{2!(96)^2} + \frac{\pi^4}{60}(n-2)\left(n-\frac{7}{2}\right)(n-5)\left(n-\frac{13}{2}\right)(n-8)\frac{1\cdot 3}{1!(96)}$$

$$\left.\left. - \frac{\pi^6}{100800}\left(n-\frac{1}{2}\right)(n-2)\left(n-\frac{7}{2}\right)(n-5)\left(n-\frac{13}{2}\right)(n-8)\left(n-\frac{19}{2}\right)\right]\beta_N^{n-11} + \ldots\right\} \tag{12.12}$$

In Tables 22 and 23 we illustrate the use of this method to compute M_n and N_n (in the case of N_n certain entries for $n < o$ are included and will be discussed later). The coefficients are defined by

Table 22

COMPUTATION OF $\left\{\exp\left[-i(n+1)\frac{\pi}{3}\right] M_n\right\}$

Method B

n	0	1	2	3	4	5
$\sum_{s=1}^{25} \frac{\alpha_s^n}{\left[Ai'(-\alpha_s)\right]^2}$	-22.9372135443	-292.0853239700	-4718.9222673865	-85605.9078826	-1656407.4317220	-33383917.29544
$\frac{\alpha_{25}}{2\left[Ai'(-\alpha_{25})\right]^2}$	0.3214951672	7.6745926065	183.2045320751	4373.3787960	104399.3938167	2492176.85861
$\frac{\alpha_{25}^{n+1}}{n+1}$	23.8715644555	284.9257947774	4534.4163167156	81182.7085295	1550366.6074702	30841396.98328
$A_{(n-2)}(\alpha_{25})$	-0.0007216502	0.0172269194	1.2337005502	49.0839370	1640.3945115	50347.00711
$A_{(n-5)}(\alpha_{25})$	0.0000001274	0.0000002707	0	-0.0001543	-0.0413697	-3.51069
$A_{(n-8)}(\alpha_{25})$	-0.0000000001	-0.0000000005	-0.0000000077	-0.0000001	0.0000020	0.00010
$A_{(n-11)}(\alpha_{25})$	0.0000000000	0.0000000000	0.0000000000	0.0000000	0.0000000	0.00000
$\exp\left[-i(n+1)\frac{\pi}{3}\right]M_n$	1.2551245555	0.5322906035	-0.0677180533	-0.7367745	-1.0772913	0.04297

Table 23

COMPUTATION OF $\left\{\exp\left[-i(n+1)\frac{\pi}{3}\right]N_n\right\}$

Method B

n	-7	-6	-5	-4	-3	-2
$-\sum_{s=1}^{20} \frac{\beta_s^n}{\beta_s\left[Ai(-\beta_s)\right]^2}$	-3.00337899264	-3.0609672180	-3.122473666	-3.1956891566	-3.314033453	-3.655406461
$\frac{\beta_{20}^n}{2\beta_{20}\left[Ai(-\beta_{20})\right]^2}$	0.00000000025	0.0000000052	0.000000104	0.0000021045	0.000042487	0.000857757
$\frac{\beta_{20}^{n+1}}{n+1}$	-0.00000000246	-0.0000000596	-0.000001505	-0.0000405096	-0.001226750	-0.049532827
$B_{(n-2)}(\beta_{20})$	-0.00000000001	-0.0000000002	-0.000000003	-0.0000000547	-0.000000858	-0.000012377
$B_{(n-5)}(\beta_{20})$	0.00000000000	0.0000000000	0.000000000	0.0000000000	0.000000000	0.000000004
$B_{(n-8)}(\beta_{20})$	0.00000000000	-0.0000000000	-0.000000000	-0.0000000000	-0.000000000	-0.000000000
$B_{(n-11)}(\beta_{20})$	0.00000000000	0.0000000000	0.000000000	0.0000000000	0.000000000	0.000000000
$\exp\left[-i(n+1)\frac{\pi}{3}\right]N_n$	-3.00337899486	-3.0609672726	-3.122475070	-3.1957276164	-3.315218574	-3.704093804

Table 23 (Cont'd)

COMPUTATION OF $\left\{\exp\left[-i(n+1)\frac{\pi}{3}\right]N_n\right\}$

Method B

n	-1	0	1	2	3	4	5
$-\sum_{s=1}^{20}\frac{\beta_s^n}{\beta_s^n[Ai(-\beta_s)]^2}$	-5.506732411	-21.626116363	-211.803765979	-2886.7020162289	-44447.880776258	-730004.7322236	-12487651.959779
$\frac{\beta_{20}^n}{2\beta_{20}[Ai(-\beta_{20})]^2}$	0.017316938	0.349605275	7.058052681	142.4924126407	2876.726811697	58077.1775547	1172498.736762
$\frac{\beta_{20}^{n+1}}{n+1}$	$\gamma + \ln\beta_{20} =$ 3.532335314	20.188631509	203.790421112	2742.8329395910	41530.535737313	670755.6957604	11284698.801758
$B_{(n-2)}(\beta_{20})$	-0.000149930	-0.~~001033302~~	0.020369559	1.2337005503	41.511208676	1173.2763216	30454.512840
$B_{(n-5)}(\beta_{20})$	0.000000024	-0.000000073	0.000003184	0	0.001297760	0.0121921	-1.660143
$B_{(n-3)}(\beta_{20})$	-0.000000000	-0.000000000	-0.000000003	0.0000000234	0.000000039	-0.0000008	-0.000193
$B_{(n-11)}(\beta_{20})$	0.000000000	-0.000000000	-0.000000000	-0.000000001	-0.000000001	-0.0000000	-0.000000
$\exp\left[-i(n+1)\frac{\pi}{3}\right]N_n$	-1.907230065	-1.038888614	-0.934928408	-0.1429634236	0.894280226	1.4296044	-1.568755

$$A_{(n-2)}(\alpha_{25}) = \frac{\pi^2}{12}\left(n - \frac{1}{2}\right)\alpha_{25}^{n-2}$$

$$A_{(n-5)}(\alpha_{25}) = -\frac{\pi^2}{6}(n-2)\left[\frac{1\cdot 3\cdot 5}{1!(96)} + \frac{\pi^2}{120}\left(n-\frac{1}{2}\right)\left(n-\frac{7}{2}\right)\right]\alpha_{25}^{n-5}$$

$$A_{(n-8)}(\alpha_{25}) = \frac{\pi^2}{12}\left(n-\frac{7}{2}\right)\left[\frac{472}{231}\,\frac{1\cdot 3\cdot 5\cdot 7\cdot 9\cdot 11}{2!(96)^2} + \frac{\pi^2}{15}(n-2)(n-5)\,\frac{1\cdot 3\cdot 5}{1!(96)}\right.$$

$$\left. + \frac{\pi^4}{2520}\left(n-\frac{1}{2}\right)(n-2)(n-5)\left(n-\frac{13}{2}\right)\right]\alpha_{25}^{n-8}$$

$$A_{(n-11)}(\alpha_{25}) = -\frac{\pi^2}{12}\left\{\frac{448}{221}(n-5)\,\frac{1\cdot 3\cdot 5\cdot 7\cdot 9\cdot 11\cdot 13\cdot 15\cdot 17}{3!(96)^3} + \frac{\pi^2}{15}\right.$$

$$\left[\frac{118}{231}\left(n-\frac{7}{2}\right)(n-8)\left(n-\frac{1}{2}\right) + \frac{5}{231}(n-2)(n-5)\left(n-\frac{19}{2}\right)\right.$$

$$\left. + \frac{41}{77}(n-2)\left(n-\frac{13}{2}\right)\left(n-\frac{28}{41}\right)\right]\frac{1\cdot 3\cdot 5\cdot 7\cdot 9\cdot 11}{2!(96)^2}$$

$$+ \frac{\pi^4}{420}(n-2)\left(n-\frac{7}{2}\right)(n-5)\left(n-\frac{13}{2}\right)(n-8)\,\frac{1\cdot 3\cdot 5}{1!(96)}$$

$$\left. + \frac{\pi^6}{100800}\left(n-\frac{1}{2}\right)(n-2)\left(n-\frac{7}{2}\right)(n-5)\left(n-\frac{13}{2}\right)(n-8)\left(n-\frac{19}{2}\right)\right\}\alpha_{25}^{n-11}$$

and

$$B_{(n-2)}(\beta_{20}) = \frac{\pi^2}{12}\left(n - \frac{1}{2}\right)\beta_{20}^{n-2}$$

$$B_{(n-5)}(\beta_{20}) = \frac{\pi^2}{6}(n-2)\left[\frac{1\cdot 3\cdot 7}{1!(96)} - \frac{\pi^2}{120}\left(n-\frac{1}{2}\right)\left(n-\frac{7}{2}\right)\right]\beta_{20}^{n-5}$$

$$B_{(n-8)}(\beta_{20}) = -\frac{\pi^2}{12}\left(n-\frac{7}{2}\right)\left[\frac{376}{15}\,\frac{1\cdot 3\cdot 5\cdot 7\cdot 9}{2!(96)^2} + \frac{\pi^2}{15}\,7(n-2)(n-5)\,\frac{1\cdot 3}{1!(96)}\right.$$

$$\left. - \frac{\pi^4}{2520}\left(n-\frac{1}{2}\right)(n-2)(n-5)\left(n-\frac{13}{2}\right)\right]\beta_{20}^{n-8}$$

$$B_{(n-11)}(\beta_{20}) = \frac{\pi^2}{12}\left\{\frac{2048}{55}(n-5)\,\frac{1\cdot 3\cdot 5\cdot 7\cdot 9\cdot 11\cdot 13\cdot 15}{3!\,(96)^3} + \frac{\pi^2}{15}\left[\frac{94}{15}\left(n-\frac{7}{2}\right)(n-8)\left(n-\frac{19}{2}\right)\right.\right.$$

$$\left. - \frac{7}{15}(n-2)(n-5)\left(n-\frac{19}{2}\right) + \frac{29}{5}(n-2)\left(n-\frac{13}{2}\right)\left(n-\frac{4}{29}\right)\right]\frac{1\cdot 3\cdot 5\cdot 7\cdot 9}{2!(96)^2}$$

$$+ \frac{\pi^4}{60}(n-2)\left(n-\frac{7}{2}\right)(n-5)\left(n-\frac{13}{2}\right)(n-8)\,\frac{1\cdot 3}{1!(96)}$$

$$\left. - \frac{\pi^6}{100800}\left(n-\frac{1}{2}\right)(n-2)\left(n-\frac{7}{2}\right)(n-5)\left(n-\frac{13}{2}\right)(n-8)\left(n-\frac{19}{2}\right)\right\}\beta_{20}^{n-11}$$

Section 13

FURTHER REPRESENTATIONS FOR $f(\xi)$, $g(\xi)$, $p(\xi)$, $q(\xi)$

We can also show that

$$f^{(n)}(0) = \exp\left(i\,\frac{5n\pi}{6} - i\,\frac{\pi}{3}\right)\sqrt{\pi}\,\left(\frac{3\pi}{2}\right)^{\frac{2}{3}\left(n-\frac{1}{4}\right)}\sum_{m=0}^{\infty} A_m(n)\left(\frac{2}{3\pi}\right)^{2m}\tau\left(2m - \frac{4n-1}{6}\,,\,\frac{3}{4}\right)$$

$$g^{(n)}(0) = \exp\left(i\,\frac{5n\pi}{6}\right)\sqrt{\pi}\,\left(\frac{3\pi}{2}\right)^{\frac{2}{3}\left(n-\frac{3}{4}\right)}\sum_{m=0}^{\infty} B_m(n)\left(\frac{2}{3\pi}\right)^{2m}\tau\left(2m - \frac{4n-3}{6}\,,\,\frac{1}{4}\right)$$

$$p^{(n)}(0) = -\frac{\exp\left[i\,\frac{(5n-1)\pi}{6}\right]}{2\sqrt{\pi}}\,\pi\left(\frac{3\pi}{2}\right)^{\frac{2}{3}\left(n-\frac{1}{2}\right)}\sum_{m=0}^{\infty} C_m(n)\left(\frac{2}{3\pi}\right)^{2m}\zeta\left(2m - \frac{2n-1}{3}\,,\,\frac{3}{4}\right)$$

$$q^{(n)}(0) = -\frac{\exp\left[i\,\frac{(5n-1)\pi}{6}\right]}{2\sqrt{\pi}}\,\pi\left(\frac{3\pi}{2}\right)^{\frac{2}{3}\left(n-\frac{1}{2}\right)}\sum_{m=0}^{\infty} D_m(n)\left(\frac{2}{3\pi}\right)^{2m}\zeta\left(2m - \frac{2n-1}{3}\,,\,\frac{1}{4}\right) \tag{13.1}$$

where $\zeta(\lambda, \mu)$ is the generalized zeta function and $\tau(\lambda, \mu)$ is the generalized tau function

$$\tau(\lambda, \mu) = 2^{1-\lambda}\zeta\left(\lambda, \frac{\mu}{2}\right) - \zeta(\lambda, \mu)$$

$$\left.\begin{aligned} \zeta(\lambda, \mu) &= \sum_{n=0}^{\infty}\frac{1}{(n+\mu)^{\lambda}} \\ \tau(\lambda, \mu) &= \sum_{n=0}^{\infty}\frac{(-1)^n}{(n+\mu)^{\lambda}} \end{aligned}\right\}\quad \lambda > 1 \tag{13.2}$$

The coefficients $A_m(n), \ldots D_m(n)$ are given by

$$A_o(n) = 1 \qquad A_1(n) = \frac{5}{48}(n - 1)$$

$$A_2(n) = \frac{5}{2^9 \cdot 3^2}\left(5n^2 - 143n + \frac{26385}{16}\right)$$

$$A_3(n) = \frac{25}{2^{13} 3^4}\left(5n^3 - 414n^2 + \frac{435025}{16} n - \frac{676598}{4}\right)$$

etc.

$$B_o(n) = 1$$

$$B_1(n) = -\frac{7}{48}\left(n - \frac{3}{2}\right)$$

$$B_2(n) = \frac{1}{2^9 \cdot 3^2}\left(49n^2 + 364n + \frac{39849}{16}\right)$$

$$B_3(n) = -\frac{25}{2^{13} \cdot 3^4}\left(49n^3 + \frac{2625}{2} n^2 + \frac{5623119}{80} n + 38\ 887\ 952\right)$$

etc.

$$C_o(n) = 1$$

$$C_1(n) = \frac{5}{48}(n - 2)$$

$$C_2(n) = \frac{5}{2^9 \cdot 3^2}(n - 5)(5n - 128)$$

$$C_3(n) = \frac{25}{2^{13} \cdot 3^4}(n^3 - 429n^2 + 52832n - 209780)$$

etc.

$$D_o(n) = 1$$

$$D_1(n) = -\frac{7}{48}(n-2)$$

$$D_2(n) = \frac{7}{2^9 \cdot 3^2}(7n+80)(n-5)$$

$$D_3(n) = -\frac{1}{2^{13} \cdot 3^4}\left(343n^3 + 8673n^2 + \frac{6175701}{10}n - \frac{109\,552\,801}{20}\right)$$

We can also show that

$$\sum_{s=N}^{\infty} \frac{(\alpha_s)^n}{Ai'(-\alpha_s)} = R_E\left\{\frac{(-a_N)^n}{Ai'(a_N)}\right\} = (-1)^{N-1}\sqrt{\pi}\left(\frac{3\pi}{2}\right)^{\frac{2}{3}\left(n-\frac{1}{4}\right)} \sum_{m=o}^{\infty} A_m(n)\left(\frac{2}{3\pi}\right)^{2m} \tau\left(2m - \frac{4n-1}{6}, N-\frac{1}{4}\right)$$

$$\sum_{s=N}^{\infty} \frac{(\beta_s)^{n-1}}{Ai(-\beta_s)} = R_E\left\{\frac{(-a_N')^{n-1}}{Ai(a_N')}\right\} = (-1)^{N-1}\sqrt{\pi}\left(\frac{3\pi}{2}\right)^{\frac{2}{3}\left(n-\frac{3}{4}\right)} \sum_{m=o}^{\infty} B_m(n)\left(\frac{2}{3\pi}\right)^{2m} \tau\left(2m - \frac{4n-3}{6}, N-\frac{3}{4}\right)$$

$$\sum_{s=N}^{\infty} \frac{(\alpha_s)^n}{[Ai'(-\alpha_s)]^2} = \pi\left(\frac{3\pi}{2}\right)^{\frac{2n-1}{3}} \sum_{m=o}^{\infty} C_m(n)\left(\frac{2}{3\pi}\right)^{2m} \zeta\left(2m - \frac{2n-1}{3}, N-\frac{1}{4}\right)$$

$$\sum_{s=N}^{\infty} \frac{(\beta_s)^{n-1}}{[Ai(-\beta_s)]^2} = \pi\left(\frac{3\pi}{2}\right)^{\frac{2n-1}{3}} \sum_{m=o}^{\infty} D_m(n)\left(\frac{2}{3\pi}\right)^{2m} \zeta\left(2m - \frac{2n-1}{3}, N-\frac{3}{4}\right)$$

The tau function can be written in the form

$$\tau(\lambda, \mu) = \sum_{n=o}^{\infty} \frac{(-1)^n}{(n+\mu)^{\lambda}}$$

for all values of λ since this is a summable divergent series for $\mathrm{Re}\,\lambda < 1$, a uniformly convergent series for $\mathrm{Re}\,\lambda > 1$, and a conditionally convergent series for $\lambda = 1$. The Euler summation process can be used on this series to obtain the values of the tau function for $\lambda < 1$. However, the form involving differences is unsatisfactory for analytical purposes and in its place we use the result

$$\sum_{n=o}^{\infty} (-1)^n T(n) = \sum_{n=o}^{N-1} (-1)^n T(n) + (-1)^N \left\{ \frac{1}{2} T(N) - \frac{1}{4} \frac{d}{dN} T(N) + \frac{1}{48} \frac{d^3}{dN^3} T(N) \right.$$

$$- \frac{1}{480} \frac{d^5}{dN^5} T(N) + \frac{17}{80540} \frac{d^7}{dN^7} T(N) + \ldots$$

$$\left. + (-1)^n (2^{2n} - 1) \frac{B_n}{(2n)!} \frac{d^{2n-1}}{dN^{2n-1}} T(N) + \ldots \right\}$$

where B_n are the Bernoulli numbers

$$B_1 = \frac{1}{6}, \quad B_2 = \frac{1}{30}, \quad B_3 = \frac{1}{42}, \quad B_4 = \frac{1}{30}, \quad B_5 = \frac{5}{66}, \quad B_6 = \frac{691}{2730}, \quad B_7 = \frac{7}{6}, \ldots$$

Therefore, we take

$$\tau(\lambda, \mu) = \sum_{n=1}^{N-1} \frac{(-1)^n}{(n+\mu)^\lambda} + (-1)^N \left\{ \frac{1}{2}(N+\mu)^{-\lambda} + \frac{\lambda}{4}(N+\mu)^{-\lambda-1} - \frac{\lambda(\lambda+1)(\lambda+2)}{48}(N+\mu)^{-\lambda-3} \right.$$

$$\left. + \frac{\lambda(\lambda+1)(\lambda+2)(\lambda+3)(\lambda+4)}{480}(N+\mu)^{-\lambda-5} - \ldots \right\}$$

In the case of the zeta function the series

$$\zeta(\lambda, \mu) = \sum_{n=o}^{\infty} \frac{1}{(n+\mu)^\lambda}$$

is a summable divergent series for $\mathrm{Re}\,\lambda < 1$ and

a uniformly convergent series for $\mathrm{Re}\,\lambda > 1$. For $\lambda = 1$ the zeta function is not defined. This divergent series can be summed by using the Euler-Maclaurin summation formula in a form involving derivatives, namely

$$\sum_{n=0}^{\infty} T(n) = \sum_{n=0}^{N-1} T(n) + \frac{1}{2} T(N) + \int_N^{\infty} T(n)dn - \frac{1}{12}\frac{d}{dN} T(N) + \frac{1}{720}\frac{d^3}{dN^3} T(N)$$

$$- \frac{1}{30240}\frac{d^5}{dN^5} T(N) + \frac{1}{1209600}\frac{d^7}{dN^7} T(N) - \frac{1}{47900160}\frac{d^9}{dN^9} T(N)$$

$$+ \ldots (-1)^n \frac{B_n}{(2n)!}\frac{d^{2n-1}}{dN^{2n-1}} T(N) + \ldots \tag{13.3}$$

Therefore, we take

$$\zeta(\lambda, \mu) = \sum_{n=1}^{N-1} \frac{1}{(n+\mu)^{\lambda}} + \frac{1}{2}(n+\mu)^{-\lambda} + \frac{1}{(\lambda-1)}(n+\mu)^{-\lambda+1} + \frac{\lambda}{12}(n+\mu)^{-\lambda-1}$$

$$- \frac{\lambda(\lambda+1)(\lambda+2)}{720}(n+\mu)^{-\lambda-3} + \frac{\lambda(\lambda+1)(\lambda+2)(\lambda+3)(\lambda+4)}{30240}(n+\mu)^{-\lambda-5}$$

$$- \frac{\lambda(\lambda+1)(\lambda+2)(\lambda+3)(\lambda+4)(\lambda+5)(\lambda+6)}{1209600}(n+\mu)^{-\lambda-7} + \ldots \tag{13.4}$$

In the work of Fock it is suggested that the integrals be expressed in the forms

$$f(\xi) = \frac{1}{\pi}\int_0^{\infty} \frac{\exp(i\xi t)}{Bi(t) + iAi(t)} dt + \frac{\exp\left(-i\frac{2\pi}{3}\right)}{\pi}\int_0^{\infty} \exp\left(-\frac{\sqrt{3}+i}{2}\xi t\right)\frac{1}{Bi(t) - iAi(t)} dt$$

$$g(\xi) = \frac{1}{\pi}\int_0^{\infty} \frac{\exp(i\xi t)}{Bi'(t) + iAi'(t)} dt + \frac{1}{\pi}\int_0^{\infty} \exp\left(-\frac{\sqrt{3}+i}{2}\xi t\right)\frac{1}{Bi'(t) - iAi'(t)} dt$$

$$p(\xi) = \frac{1}{\sqrt{\pi}} \int_0^\infty \exp(i\xi t) \frac{Ai(t)}{Bi(t) + i\,Ai(t)}\, dt + \frac{\exp\left(-i\frac{\pi}{3}\right)}{\sqrt{\pi}} \int_0^\infty \exp\left(-\frac{\sqrt{3}+i}{2}\xi t\right) \frac{Ai(t)}{Bi(t) - i\,Ai(t)}\, dt$$

$$q(\xi) = \frac{1}{\sqrt{\pi}} \int_0^\infty \exp(i\xi t) \frac{Ai'(t)}{Bi'(t) + i\,Ai'(t)}\, dt + \frac{\exp\left(-i\frac{\pi}{3}\right)}{\sqrt{\pi}} \int_0^\infty \exp\left(-\frac{\sqrt{3}+i}{2}\xi t\right) \frac{Ai'(t)}{Bi'(t) - i\,Ai'(t)}\, dt$$

It should be observed that

$$\frac{1}{\pi} \int_{-\infty}^0 \exp(i\xi t) \frac{1}{Bi(t) + i\,Ai(t)}\, dt = \frac{\exp\left(-i\frac{2\pi}{3}\right)}{\pi} \int_0^\infty \exp\left(-\frac{\sqrt{3}+i}{2}\xi t\right) \frac{1}{Bi(t) - i\,Ai(t)}\, dt$$

$$\frac{1}{\pi} \int_{-\infty}^0 \exp(i\xi t) \frac{1}{Bi'(t) + i\,Ai'(t)}\, dt = \frac{1}{\pi} \int_0^\infty \exp\left(-\frac{\sqrt{3}+i}{2}\xi t\right) \frac{1}{Bi'(t) - i\,Ai'(t)}\, dt$$

$$\frac{1}{\sqrt{\pi}} \int_{-\infty}^0 \exp(i\xi t) \frac{Ai(t)}{Bi(t) + i\,Ai(t)}\, dt = -\frac{i}{2\sqrt{\pi}} \int_{-\infty}^0 \exp(i\xi t)\, dt$$

$$+\frac{i}{2\sqrt{\pi}} \int_{-\infty}^0 \exp(i\xi t) \frac{Bi(t) - i\,Ai(t)}{Bi(t) + i\,Ai(t)}\, dt$$

$$= -\frac{1}{2\sqrt{\pi}\,\xi} + \frac{\exp\left(-i\frac{\pi}{3}\right)}{\sqrt{\pi}} \int_0^\infty \exp\left(-\frac{\sqrt{3}+i}{2}\xi t\right) \frac{Ai(t)}{Bi(t) - i\,Ai(t)}\, dt$$

$$\frac{1}{\sqrt{\pi}} \int_{-\infty}^0 \exp(i\xi t) \frac{Ai'(t)}{Bi'(t) + i\,Ai'(t)}\, dt = -\frac{1}{2\sqrt{\pi}\,\xi} + \frac{\exp\left(-i\frac{\pi}{3}\right)}{\sqrt{\pi}} \int_0^\infty \exp\left(-\frac{\sqrt{3}+i}{2}\right) \frac{Ai'(t)}{Bi'(t) - i\,Ai'(t)}\, dt \qquad (13.5)$$

The integrals of the form

$$\int_{-\infty}^{0} \exp(i\xi t) \cdots dt$$

are characterized by integrands which make them improper integrals. For example, for $t \to -\infty$, the integrands of $\hat{p}(\xi)$ and $\hat{q}(\xi)$ have the properties

$$\frac{Bi(t) - i\,Ai(t)}{Bi(t) + i\,Ai(t)} \xrightarrow[t \to -\infty]{} \exp\left\{-i2\left[\frac{2}{3}(-t)^{\frac{3}{2}} + \frac{\pi}{4}\right]\right\}$$

$$\frac{Bi'(t) - i\,Ai'(t)}{Bi'(t) + i\,Ai'(t)} \xrightarrow[t \to -\infty]{} -\exp\left\{-i2\left[\frac{2}{3}(-t)^{\frac{3}{2}} + \frac{\pi}{4}\right]\right\}$$

which permits us to write

$$\frac{i}{2\sqrt{\pi}} \int_{-\infty}^{0} \frac{Bi(t) - i\,Ai(t)}{Bi(t) + i\,Ai(t)} \exp(i\xi t)\,dt \xrightarrow[\xi \to -\infty]{} \frac{1}{2\sqrt{\pi}} \int_{-\infty}^{0} \exp\left[i\xi t - i\,\frac{4}{3}(-t)^{\frac{3}{2}}\right]dt$$

$$\frac{i}{2\sqrt{\pi}} \int_{-\infty}^{0} \frac{Bi'(t) - i\,Ai'(t)}{Bi'(t) + i\,Ai'(t)} \exp(i\xi t)\,dt \xrightarrow[\xi \to -\infty]{} -\frac{1}{2\sqrt{\pi}} \int_{-\infty}^{0} \exp\left[i\xi t - i\,\frac{4}{3}(-t)^{\frac{3}{2}}\right]dt \qquad (13.6)$$

The improper integral

$$I(\xi) = \frac{1}{2\sqrt{\pi}} \int_{-\infty}^{0} \exp\left[i\xi t - i\,\frac{4}{3}(-t)^{\frac{3}{2}}\right]dt\,, \quad \xi < 0$$

has a point of stationary phase at $t^{1/2} = -(\xi/2)$. If we write

$$\xi t - \frac{4}{3}(-t)^{3/2} = -\frac{\xi^3}{12} - \frac{1}{(-\xi)}\left(t - \frac{\xi^2}{4}\right)^2 + \cdots$$

we note that

$$I(\xi) = \frac{1}{2\sqrt{\pi}} \exp\left(-i\frac{\xi^3}{12}\right) \int_{-\infty}^{0} \exp\left[-i\frac{1}{(-\xi)}\left(t - \frac{\xi^2}{4}\right)^2\right] dt$$

$$= \frac{1}{2\sqrt{\pi}} \exp\left(-i\frac{\xi^3}{12}\right) \int_{-\infty}^{\frac{\xi^2}{4}} \exp\left\{-i\frac{1}{(-\xi)}u^2\right\} du$$

Therefore, the improper integrals behave like Fresnel integrals. On the other hand, the integrals of the form

$$\int_0^\infty \exp\left(-\frac{\sqrt{3}+i}{2}\xi t\right) \ldots\ldots dt$$

are uniformly convergent with respect to ξ since

$$Ai(t) \xrightarrow[t \to \infty]{} \frac{1}{2\sqrt{\pi}} \frac{1}{\sqrt[4]{t}} \exp\left(-\frac{2}{3}t^{3/2}\right),$$

$$Bi(t) \xrightarrow[t \to \infty]{} \frac{1}{\sqrt{\pi}} \frac{1}{\sqrt[4]{t}} \exp\left(\frac{2}{3}t^{3/2}\right).$$

Fock proposed that these integrals be evaluated by introducing the expansions

$$\exp(i\xi t) = \sum_{n=0}^{\infty} \frac{(it)^n}{n!} \xi^n \quad , \quad \exp\left(-\frac{\sqrt{3}+i}{2}\xi t\right) = \sum_{n=0}^{\infty} \frac{\left[-\exp\left(i\frac{\pi}{6}\right)t\right]^n}{n!} \xi^n$$

and interchanging the roles of summation and integration.

In this way we find that

$$\alpha_n = \frac{1}{\pi}\left\{\left[\cos\frac{5n\pi}{6} + \cos\frac{n\pi}{2}\right]J_1(n) + \left[\sin\frac{5n\pi}{6} + \sin\frac{n\pi}{2}\right]J_2(n)\right\}$$

$$\beta_n = \frac{1}{\pi}\left\{\left[-\sin\frac{5n\pi}{6} + \sin\frac{n\pi}{2}\right]J_1(n) + \left[\cos\frac{5n\pi}{6} - \cos\frac{n\pi}{2}\right]J_2(n)\right\}$$

$$\gamma_n = \frac{1}{\pi}\left\{\left[\cos\frac{(5n+4)}{6}\pi + \cos\frac{n\pi}{2}\right]I_1(n) + \left[\sin\frac{(5n+4)}{6}\pi + \sin\frac{n\pi}{2}\right]I_2(n)\right\}$$

$$\delta_n = \frac{1}{\pi}\left\{\left[-\sin\frac{(5n+4)}{6}\pi + \sin\frac{n\pi}{2}\right]I_1(n) + \left[\cos\frac{(5n+4)}{6}\pi - \cos\frac{n\pi}{2}\right]I_2(n)\right\}$$

$$a_n = \frac{1}{\sqrt{\pi}}\left\{\left[\cos\frac{(5n+2)}{6}\pi + \cos\frac{n\pi}{2}\right]J_3(n) + \left[\sin\frac{(5n+2)}{6}\pi + \sin\frac{n\pi}{2}\right]J_4(n)\right\}$$

$$b_n = \frac{1}{\sqrt{\pi}}\left\{\left[-\sin\frac{(5n+2)}{6}\pi + \sin\frac{n\pi}{2}\right]J_3(n) + \left[\cos\frac{(5n+2)}{6}\pi - \cos\frac{n\pi}{2}\right]J_4(n)\right\}$$

$$c_n = \frac{1}{\sqrt{\pi}}\left\{\left[\cos\frac{(5n+2)}{6}\pi + \cos\frac{n\pi}{2}\right]I_3(n) + \left[\sin\frac{(5n+2)}{6}\pi + \sin\frac{n\pi}{2}\right]I_4(n)\right\}$$

$$d_n = \frac{1}{\sqrt{\pi}}\left\{\left[-\sin\frac{(5n+2)}{6}\pi + \sin\frac{n\pi}{2}\right]I_3(n) + \left[\cos\frac{(5n+2)}{6}\pi - \cos\frac{n\pi}{2}\right]I_4(n)\right\} \qquad (13.7)$$

where

$$I_1(n) = \int_0^\infty \frac{t^n\,Bi(t)}{F^2(t)}\,dt, \qquad J_1(n) = \int_0^\infty \frac{t^n\,Bi'(t)}{G^2(t)}\,dt,$$

$$I_2(n) = \int_0^\infty \frac{t^n\,Ai(t)}{F^2(t)}\,dt, \qquad J_2(n) = \int_0^\infty \frac{t^n\,Ai'(t)}{G^2(t)}\,dt,$$

$$I_3(n) = \int_0^\infty \frac{t^n\,Ai(t)\,Bi(t)}{F^2(t)}\,dt, \qquad J_3(n) = \int_0^\infty \frac{t^n\,Ai'(t)\,Bi'(t)}{G^2(t)}\,dt,$$

$$I_4(n) = \int_0^\infty \frac{t^n\,Ai(t)\,Ai(t)}{F^2(t)}\,dt, \qquad J_4(n) = \int_0^\infty \frac{t^n\,Ai'(t)\,Ai'(t)}{G^2(t)}\,dt,$$

$$F^2(t) = Ai^2(t) + Bi^2(t), \qquad G^2(t) = Ai'^2(t) + Bi'^2(t). \qquad (13.8)$$

The integrals $I_1(n), \cdots J_4(n)$ have been evaluated for $n = 0(1)20$ with an accuracy of about five significant figures.

For large values of n we have used the results

$$\frac{1}{\pi}\frac{1}{Bi(t)} = -2Ai'(t) - \left(\frac{1}{2t} + \frac{15}{32}\frac{1}{t^4} + \frac{1695}{512}\frac{1}{t^7} + \frac{59025}{1024}\frac{1}{t^{10}} + \frac{2421\,83775}{131072}\frac{1}{t^{13}}\cdots\right)Ai(t)$$

$$\frac{1}{\pi}\frac{1}{Bi'(t)} = 2Ai(t) - \left(\frac{1}{2t^2} + \frac{21}{32}\frac{1}{t^5} + \frac{2121}{512}\frac{1}{t^8} + \frac{136479}{2048}\frac{1}{t^{11}} + \frac{2681\,22561}{131072}\frac{1}{t^{14}} + \cdots\right)Ai'(t)$$

$$\left[\frac{1}{\pi Bi(t)}\right]^2 = 4Ai'(t)\,Ai'(t) + \left(\frac{2}{t} + \frac{15}{8}\frac{1}{t^4} + \frac{1695}{128}\frac{1}{t^7} + \frac{59025}{256}\frac{1}{t^{10}} + \cdots\right)Ai(t)\,Ai'(t)$$
$$+ \left(\frac{1}{4t^2} + \frac{15}{32}\frac{1}{t^5} + \frac{3615}{1024}\frac{1}{t^8} + \frac{547625}{8192}\frac{1}{t^{11}} + \cdots\right)Ai(t)\,Ai(t)$$

$$\left[\frac{1}{\pi Bi'(t)}\right]^2 = 4Ai(t)\,Ai(t) - \left(\frac{2}{t^2} + \frac{21}{8}\frac{1}{t^5} + \frac{2121}{128}\frac{1}{t^8} + \frac{136479}{512}\frac{1}{t^{11}} + \cdots\right)Ai(t)\,Ai'(t)$$
$$+ \left(\frac{1}{4t^4} + \frac{21}{32}\frac{1}{t^7} + \frac{4683}{1024}\frac{1}{t^{10}} + \frac{590457}{8192}\frac{1}{t^{13}} + \cdots\right)Ai'(t)\,Ai'(t)$$

$$\left[\frac{1}{\pi Bi(t)}\right]^3 = -8Ai'(t)\,Ai'(t)\,Ai'(t) - 3Ai'(t)\,Ai'(t)\,Ai(t)\left(\frac{2}{t} + \frac{15}{8}\frac{1}{t^4} + \frac{1695}{128}\frac{1}{t^7} + \frac{59025}{256}\frac{1}{t^{10}} + \cdots\right)$$
$$-3Ai'(t)\,Ai(t)\,Ai(t)\left(\frac{1}{2t^2} + \frac{15}{16}\frac{1}{t^5} + \frac{3615}{512}\frac{1}{t^8} + \frac{547625}{4096}\frac{1}{t^{11}} + \cdots\right)$$
$$-Ai(t)\,Ai(t)\,Ai(t)\left(\frac{1}{8t^3} + \frac{45}{128}\frac{1}{t^6} + \frac{2880}{1024}\frac{1}{t^9} + \frac{1527525}{32768}\frac{1}{t^{12}} + \cdots\right)$$

$$\left[\frac{1}{\pi Bi'(t)}\right]^3 = 8Ai(t)\,Ai(t)\,Ai(t) - 3Ai(t)\,Ai(t)\,Ai'(t)\left(\frac{2}{t^2} + \frac{21}{8}\frac{1}{t^5} + \frac{2121}{128}\frac{1}{t^8} + \frac{136479}{512}\frac{1}{t^{11}} + \cdots\right)$$
$$+3Ai(t)\,Ai'(t)\,Ai'(t)\left(\frac{1}{2t^4} + \frac{21}{16}\frac{1}{t^7} + \frac{4683}{512}\frac{1}{t^{10}} + \frac{590457}{4096}\frac{1}{t^{13}} + \cdots\right)$$
$$-Ai'(t)\,Ai'(t)\,Ai'(t)\left(\frac{1}{8t^6} + \frac{63}{128}\frac{1}{t^9} + \frac{3843}{1024}\frac{1}{t^{12}} + \frac{1914255}{32768}\frac{1}{t^{15}} + \cdots\right)$$

along with a class of integrals

$$\frac{1}{n!}\int_0^\infty t^n Ai(t)\,dt = A_n\,,\quad \frac{1}{n!}\int_0^\infty t^n Ai'(t)\,dt = B_n\,,\quad \frac{1}{n!}\int_0^\infty t^n Ai(t)\,Ai(t)\,dt = C_n\,,$$

$$\frac{1}{n!}\int_0^\infty t^n Ai'(t)\,Ai(t)\,dt = D_n\,,\quad \frac{1}{n!}\int_0^\infty t^n Ai'(t)\,Ai'(t)\,dt = E_n\,,\quad \frac{1}{n!}\int_0^\infty t^n Ai^3(t)\,dt = F_n\,,$$

$$\frac{1}{n!}\int_0^\infty t^n Ai^2(t)\,Ai'(t)\,dt = G_n\,,\quad \frac{1}{n!}\int_0^\infty t^n Ai(t)\,Ai'^2(t)\,dt = H_n\,,\quad \frac{1}{n!}\int_0^\infty t^n Ai'^3(t)\,dt = I_n$$

$$\frac{1}{n!}\int_0^\infty t^n Ai^4(t)\,dt = J_n\,,\quad \frac{1}{n!}\int_0^\infty t^n Ai^3(t)\,Ai'(t)\,dt = K_n\,,\quad \frac{1}{n!}\int_0^\infty t^n Ai^2(t)\,Ai'^2(t)\,dt = L_n$$

$$\int_0^\infty t^n Ai(t)\,Ai'^3(t)\,dt = M_n\,,\qquad \int_0^\infty t^n Ai'^4(t)\,dt = N_n$$

$$\frac{1}{n!}\int_0^\infty t^n Ai^5(t)\,dt = O_n\,,\quad \frac{1}{n!}\int_0^\infty t^n Ai^4(t)\,Ai'(t)\,dt = P_n\,,\quad \frac{1}{n!}\int_0^\infty t^n Ai^3(t)\,Ai'^2(t)\,dt = Q_n\,,$$

$$\frac{1}{n!}\int_0^\infty t^n Ai^2(t)\,Ai'^3(t)\,dt = R_n\,,\quad \frac{1}{n!}\int_0^\infty t^n Ai(t)\,Ai'^4(t)\,dt = S_n\,,\quad \frac{1}{n!}\int_0^\infty t^n Ai'^5(t)\,dt = T_n$$

In this way we find, for example,

$$I_1(n) = \int_0^\infty t^n \frac{Ai(t)}{Bi^2(t)} \left(1 - \frac{Ai^2(t)}{Bi^2(t)} + \cdots\right) dt = 4\pi^2 \int_0^\infty t^n \, Ai(t)\, Ai'(t)\, Ai'(t)\, dt$$

$$+ \pi^2 \int_0^\infty t^n \left(\frac{2}{t} + \frac{15}{8}\frac{1}{t^4} + \frac{1695}{128}\frac{1}{t^7} + \cdots\right) Ai^2(t)\, Ai'(t)\, dt$$

$$+ \pi^2 \int_0^\infty t^n \left(\frac{1}{4t^2}\frac{15}{32}\frac{1}{t^5} + \frac{3615}{1024}\frac{1}{t^8} + \cdots\right) Ai^3(t)\, dt + \cdots$$

$$= 4\pi^2\, n!\, H_n + \pi^2 \left\{2(n-1)!\, G_{n-1} + \frac{15}{8}(n-4)!\, G_{n-4} + \cdots\right\}$$

$$+ \pi^2 \left\{\frac{1}{4}(n-2)!\, F_{n-2} + \frac{15}{32}(n-5)!\, F_{n-5} + \cdots\right\}$$

$$I_2(n) = \int_0^\infty t^n \frac{1}{Bi(t)} \left(1 - \frac{Ai^2(t)}{Bi^2(t)} - \cdots\right) dt = -2\pi \int_0^\infty t^n\, Ai'(t)\, dt - \pi \int_0^\infty t^n \left(\frac{1}{2t} + \frac{15}{32}\frac{1}{t^4} + \frac{1695}{512}\frac{1}{t^7} + \cdots\right) Ai(t)\, dt$$

$$+ 8\pi^3 \int_0^\infty t^n\, Ai^2(t)\, Ai'^3(t)\, dt - 3\pi^3 \int_0^\infty t^n \left(\frac{2}{t} + \frac{15}{8}\frac{1}{t^4} + \cdots\right) Ai^3(t)\, Ai'^2(t)\, dt$$

$$- 3\pi^3 \int_0^\infty t^n \left(\frac{1}{2t^2} + \frac{15}{16}\frac{1}{t^5} + \cdots\right) Ai^4(t)\, Ai'(t)\, dt - \pi^3 \int_0^\infty t^n \left(\frac{1}{8t^3} + \frac{45}{128}\frac{1}{t^6} + \cdots\right) Ai^5(t)\, dt$$

$$= -2\pi\, n!\, B_n - \pi \left\{\frac{1}{2}(n-1)!\, A_{n-1} + \frac{15}{32}(n-4)!\, A_{n-4} + \frac{1695}{512}(n-7)!\, A_{n-7}\right.$$

$$\left. + \frac{59025}{1024}(n-10)!\, A_{n-10} + \frac{2421\,83775}{131072}(n-13)!\, A_{n-13} + \cdots\right\}$$

$$+ 8\pi^3\, n!\, R_n - 3\pi^3 \left\{2(n-1)!\, Q_{n-1} + \frac{15}{8}(n-4)!\, Q_{n-4} + \cdots\right\}$$

$$- 3\pi^3 \left\{\frac{1}{2}(n-2)!\, P_{n-2} + \frac{15}{16}(n-5)!\, P_{n-5} + \cdots\right\}$$

$$- \pi^3 \left\{\frac{1}{8}(n-3)!\, O_{n-3} + \frac{45}{128}(n-6)!\, O_{n-6} + \cdots\right\}$$

We have shown that

$$A_o = \frac{1}{3}, \quad A_1 = -Ai'(0) = \frac{1}{3^{1/3}\Gamma(1/3)}, \quad A_2 = \frac{1}{2}Ai(\ ) = \frac{1}{2}\frac{1}{3^{2/3}\Gamma(2/3)}, \quad A_{n+3} = \frac{A_n}{n+3}$$

and

$$B_o = -Ai(0) = -\frac{1}{3^{2/3}\Gamma(2/3)}, \quad B_n = -A_{n-1}, \quad n \geq 1.$$

Also, we have shown that

$$C_o = Ai'^2(0) = \left\{\frac{1}{3^{1/3}\Gamma(1/3)}\right\}^2$$

$$C_1 = \frac{-1}{3}\, Ai(0)\, Ai'(0) = \frac{1}{6\sqrt{3}\,\pi}$$

$$C_2 = \frac{1}{10}\, Ai^2(0) = \frac{1}{10}\left\{\frac{1}{3^{2/3}\Gamma(2/3)}\right\}^2$$

$$C_{n+3} = \frac{C_n}{2(2n+7)}, \quad n \geq 0$$

Furthermore,

$$D_o = -\frac{1}{2}\, Ai^2(0) = -\frac{1}{2}\left\{\frac{1}{3^{2/3}\Gamma(2/3)}\right\}^2$$

$$D_n = -\frac{1}{2}\, C_{n-1}, \quad n \gg 1, \quad D_{n+3} = \frac{D_n}{2(2n+5)}$$

$$E_o = \frac{2}{3}\, Ai(0)\, Ai'(0)$$

$$E_1 = \frac{3}{10} Ai^2(o)$$

$$E_2 = \frac{2}{7} Ai'^2(o)$$

$$E_n = \frac{1}{2} C_{n-2} - (n+1) C_{n+1}$$

Similar results have been obtained for $F_n, \cdots, T_n$.

For $n > 20$ we can neglect the integrals I_2, J_2, I_4, J_4 and use the approximations

$$I_1(n) \sim \int_0^\infty \frac{t^n}{Bi(t)} dt = 2\pi n!\, A_{n-1} - \pi\left\{\frac{1}{2}(n-1)!\, A_{n-1} + \frac{15}{32}(n-4)!\, A_{n-4} + \frac{1695}{512}(n-7)!\, A_{n-7} + \cdots\right\}$$

$$J_1(n) \sim \int_0^\infty \frac{t^n}{Bi'(t)} dt = \pi\left\{2n!\, A_n + \frac{1}{2}(n-2)!\, A_{n-3} + \frac{21}{32}(n-5)!\, A_{n-6} + \frac{2121}{512}(n-8)!\, A_{n-9} + \cdots\right\}$$

$$I_3(n) \sim \int_0^\infty t^n \frac{Ai(t)}{Bi(t)} dt = \pi n!\, C_{n-1} - \pi\left\{\frac{1}{2}(n-1)!\, C_{n-1} + \frac{15}{32}(n-4)!\, C_{n-4} + \frac{1695}{512}(n-7)!\, C_{n-7} + \cdots\right\}$$

$$J_3(n) \sim \int_0^\infty t^n \frac{Ai'(t)}{Bi'(t)} dt = 2\pi n!\, D_n - \pi\left\{\frac{1}{2}(n-2)!\, E_{n-2} + \frac{21}{32}(n-5)!\, E_{n-5} + \frac{2121}{512}(n-8)!\, E_{n-8} + \cdots\right\}$$

The above representations have been used to compute the Taylor coefficients $f^{(n)}(0)$, $g^{(n)}(0)$, $p^{(n)}(0)$, $q^{(n)}(0)$ for $n = 0(1)40$. The numerical values obtained for these constants are given in Tables 24–27. (Certain values for $n < 0$ are also included.)

Table 24

TABLE OF TAYLOR COEFFICIENTS γ_n, δ_n FOR THE FUNCTIONS

$$f^{(r)}(\xi) = \sum_{m=0}^{\infty} \gamma_{m+r} \frac{\xi^m}{m!} + i \sum_{m=0}^{\infty} \delta_{m+r} \frac{\xi^m}{m!}$$

n	γ_n	δ_n	$\sqrt{\gamma_r^2 + \delta_r^2}$
-1	-0.368146	0.212549	.425099
0	0.387911	-0.671881	.775821
1	0	1.14673	1.14673
2	-0.431479	-0.747343	.862957
3	-1.74873	-1.00963	2.01926
4	9.97777	0	9.97777
5	-12.6478	7.30219	14.6044
6	-24.5374	42.5000	49.0748
7	0	-3.59472×10^{2}	3.59472×10^{2}
8	3.60285×10^{2}	6.24032×10^{2}	7.20570×10^{2}
9	2.71105×10^{3}	1.56522×10^{3}	3.13045×10^{3}
10	-2.91055×10^{4}	0	2.91055×10^{4}
11	6.24272×10^{4}	-3.60424×10^{4}	7.20847×10^{4}
12	1.89184×10^{5}	-3.27676×10^{5}	3.78367×10^{5}
13	0	4.18803×10^{6}	4.18803×10^{6}
14	-6.08711×10^{6}	-1.05432×10^{7}	1.21742×10^{7}
15	-6.41752×10^{7}	3.70515×10^{7}	7.41031×10^{7}
16	9.41657×10^{8}	0	9.41657×10^{8}
17	-2.69736×10^{9}	1.55732×10^{9}	3.11464×10^{9}
18	-1.07015×10^{10}	1.85356×10^{10}	2.14030×10^{10}

Table 24 (Cont'd)

n	γ_n	δ_n	$\sqrt{\gamma_r^2 + \delta_r^2}$
19	0	-3.04929×10^{11}	3.04929×10^{11}
20	5.61909×10^{11}	9.73255×10^{11}	1.12382×10^{12}
21	7.41073×10^{12}	4.27859×10^{12}	8.55717×10^{12}
22	-1.34416×10^{14}	0	1.34416×10^{14}
23	4.70865×10^{14}	-2.71854×10^{14}	5.43708×10^{14}
24	2.26253×10^{15}	-3.91881×10^{15}	4.52505×10^{15}
25	0	7.73963×10^{16}	7.73963×10^{16}
26	-1.69854×10^{17}	-2.94195×10^{17}	3.39707×10^{17}
27	-2.64831×10^{18}	-1.52900×10^{18}	3.05800×10^{18}
28	5.64059×10^{19}	0	5.64059×10^{19}
29	-2.30587×10^{20}	1.33130×10^{20}	2.66259×10^{20}
30	-1.28557×10^{21}	2.22667×10^{21}	2.57114×10^{21}
31	0	-5.07533×10^{22}	5.07533×10^{22}
32	1.27909×10^{23}	2.21545×10^{23}	2.55818×10^{23}
33	2.27963×10^{24}	1.31615×10^{24}	2.63229×10^{24}
34	-5.52593×10^{25}	0	5.52593×10^{25}
35	2.56058×10^{26}	-1.47835×10^{26}	2.95670×10^{26}
36	1.61199×10^{27}	-2.79204×10^{27}	3.22398×10^{27}
37	0	7.16039×10^{28}	7.16039×10^{28}
38	-2.02353×10^{29}	-3.50486×10^{29}	4.04707×10^{29}
39	-4.03109×10^{30}	-2.32735×10^{30}	4.65471×10^{30}
40	1.08894×10^{32}	0	1.08894×10^{32}

Table 25

TABLE OF TAYLOR COEFFICIENTS α_n , β_n FOR THE FUNCTIONS

$$g^{(r)}(\xi)=\sum_{m=0}^{\infty} \alpha_{m+r} \frac{\xi^m}{m!} + i \sum_{m=0}^{\infty} \beta_{m+r} \frac{\xi^m}{m!}$$

n	α_n	β_n	$\sqrt{\alpha_n^2 + \beta_n^2}$
-5	1.444255	-0.833841	1.66768
-4	-0.847553	1.46800	1.69511
-3	0	-1.71501	1.71501
-2	0.85588	1.48242	1.71175
-1	-1.42244	-0.82125	1.64249
0	1.39938	0	1.39938
1	-0.647253	0.373692	0.747384
2	-0.343104	0.594273	0.686207
3	0	-2.94954	2.94954
4	1.74135	3.01611	3.48271
5	7.74049	4.46897	8.93795
6	-56.1946	0	56.1946
7	84.5802	-48.8324	97.6648
8	1.85255×10^2	-3.20611×10^2	3.70285×10^2
9	0	3.08379×10^3	3.08379×10^3
10	-3.45171×10^3	-5.97854×10^3	6.90342×10^3
11	-2.86020×10^4	-1.65134×10^4	3.30268×10^4
12	3.36144×10^5	0	3.36144×10^5
13	-7.83146×10^5	4.52149×10^5	9.04299×10^5
14	-2.56109×10^6	4.43593×10^6	5.12217×10^6
15	0	-0.608715×10^8	0.608715×10^8

Table 25 (Cont'd)

n	α_n	β_n	$\sqrt{\alpha_n^2 + \beta_n^2}$
16	9.45444×10^{7}	1.63756×10^{8}	1.89089×10^{8}
17	1.06114×10^{9}	6.12648×10^{8}	1.22530×10^{9}
18	-1.65044×10^{10}	0	1.65044×10^{10}
19	4.99689×10^{10}	-2.88495×10^{10}	5.76991×10^{10}
20	0.208930×10^{12}	-0.361878×10^{12}	4.17860×10^{11}
21	0	6.25779×10^{12}	6.25779×10^{12}
22	-1.20927×10^{13}	-2.09452×10^{13}	2.41855×10^{13}
23	-1.66888×10^{14}	-0.963526×10^{14}	1.92705×10^{14}
24	3.16128×10^{15}	0	3.16128×10^{15}
25	-1.15446×10^{16}	0.666530×10^{16}	1.33306×10^{16}
26	-5.77329×10^{16}	9.99963×10^{16}	1.15466×10^{17}
27	0	-2.05226×10^{18}	2.05226×10^{18}
28	4.67362×10^{18}	8.09434×10^{18}	9.34724×10^{18}
29	7.55164×10^{19}	4.35994×10^{19}	8.71988×10^{19}
30	-1.66478×10^{21}	0	1.66478×10^{21}
31	7.03610×10^{21}	-4.06230×10^{21}	8.12459×10^{21}
32	4.05126×10^{22}	-7.01698×10^{22}	8.10251×10^{22}
33	0	1.65014×10^{24}	1.65014×10^{24}
34	-4.28655×10^{24}	-7.42452×10^{24}	8.57309×10^{24}
35	-7.86747×10^{25}	-4.54228×10^{25}	9.08457×10^{25}
36	1.96235×10^{27}	0	1.96235×10^{27}
37	-9.34900×10^{27}	5.39765×10^{27}	1.07953×10^{28}
38	-6.04673×10^{28}	1.04732×10^{29}	1.20935×10^{29}
39	0	-2.75752×10^{30}	2.75752×10^{30}
40	7.99506×10^{30}	1.38478×10^{31}	1.59901×10^{31}

Table 26

TABLE OF TAYLOR COEFFICIENTS c_n, d_n FOR THE FUNCTIONS

$$p^{(r)}(\xi) = \sum_{m=o}^{\infty} c_{m+r} \frac{\xi^m}{m!} + i \sum_{m=o}^{\infty} d_{m+r} \frac{\xi^m}{m!}$$

n	c_n	d_n	$\sqrt{c_n^2 + d_n^2}$
0	0.306628	-0.177032	0.354064
1	-0.075074	0.130032	0.150139
2	0	0.019102	0.019102
3	-0.103899	-0.179957	0.207797
4	0.263286	0.152009	0.304017
5	0.016830	0	0.016830
6	-1.00941	0.582785	1.16557
7	1.30741	-2.26451	2.61483
8	0	-0.050352	0.050352
9	8.85214	15.3323	17.7043
10	-44.1769	-25.5056	51.0111
11	-0.312482	0	0.312482
12	4.46438×10^2	-2.57751×10^2	5.30630×10^2
13	-8.88385×10^2	1.53873×10^3	1.77677×10^3
14	0	0.327929	0.327929
15	-1.22548×10^4	-2.12260×10^4	2.45097×10^4
16	8.41077×10^4	4.85596×10^4	9.71193×10^4
17	52.0334	0	52.0334
18	-1.49242×10^6	8.61651×10^5	1.72330×10^6
19	3.83642×10^6	-6.64488×10^6	7.67284×10^6
20	0	-1.16244×10^3	1.16244×10^3

Table 26 (Cont'd)

n	c_n	d_n	$\sqrt{c_n^2 + d_n^2}$
21	8.42125×10^{7}	1.45860×10^{8}	1.68425×10^{8}
22	7.16724×10^{8}	-4.13801×10^{8}	8.27602×10^{8}
23	0	0	0
24	1.89036×10^{10}	-1.09140×10^{10}	2.18279×10^{10}
25	-5.84380×10^{10}	1.01218×10^{11}	1.16876×10^{11}
26	0	0	0
27	-1.81137×10^{12}	-3.13739×10^{12}	3.62274×10^{12}
28	1.81272×10^{13}	1.04657×10^{13}	2.09315×10^{13}
29	0	0	0
30	-6.48931×10^{14}	3.74660×10^{14}	7.49321×10^{14}
31	2.31776×10^{15}	-4.01448×10^{15}	4.63552×10^{15}
32	0	0	0
33	9.44929×10^{16}	1.63666×10^{17}	1.88986×10^{17}
34	-1.07722×10^{18}	-6.21933×10^{17}	1.24387×10^{18}
35	0	0	0
36	4.94407×10^{19}	-2.85446×10^{19}	5.70892×10^{19}
37	-1.98836×10^{20}	3.44394×10^{20}	3.97672×10^{20}
38	0	0	0
39	-1.01748×10^{22}	-1.76234×10^{22}	2.03497×10^{22}
40	1.29347×10^{23}	7.46786×10^{22}	1.49357×10^{23}
41	0	0	0
42	-7.31948×10^{24}	4.22590×10^{24}	8.45180×10^{24}
43	3.25563×10^{25}	-5.63892×10^{25}	6.51126×10^{25}
44	0	0	0
45	2.02294×10^{27}	3.50384×10^{27}	4.04589×10^{27}

Table 26 (Cont'd)

n	c_n	d_n	$\sqrt{c_n^2 + d_n^2}$
46	-2.82412×10^{28}	-1.63051×10^{28}	3.26101×10^{28}
47	0	0	0
48	1.91512×10^{30}	-1.10569×10^{30}	2.21138×10^{30}
49	-9.29714×10^{30}	1.61031×10^{31}	1.85943×10^{31}
50	0	0	0

Table 27

TABLE OF TAYLOR COEFFICIENTS a_n, b_n FOR THE FUNCTIONS

$$q^{(r)}(\xi) = \sum_{m=0}^{\infty} a_{m+r} \frac{\xi^m}{m!} + i \sum_{m=0}^{\infty} b_{m+r} \frac{\xi^m}{m!}$$

n	a_n	b_n	$\sqrt{a_n^2 + b_n^2}$
-14	-0.643967	-0.371795	0.743589
-13	0.757564	0	0.757564
-12	-0.668399	0.385901	0.771801
-11	0.393153	-0.680961	0.786306
-10	0	0.801086	0.801086
-9	-0.408075	-0.706805	0.816149
-8	0.720114	0.415758	0.831516
-7	-0.847238	0	0.847238
-6	0.747798	-0.431742	0.863483
-5	-0.440416	0.762823	0.880833
-4	0	-0.901488	0.901488
-3	0.467603	0.809912	0.935205
-2	-0.904914	-0.522453	1.044906
-1	0.537744	0.147704	0.557660
0	-0.266001	0.153626	0.307177
1	0.131893	-0.228410	0.263755
2	0	0.040272	0.040272
3	0.126164	0.218471	0.252283
4	-0.361509	-0.208757	0.417454
5	0.033482	0	0.033482

Table 27 (Cont'd)

n	a_n	b_n	$\sqrt{a_n^2 + b_n^2}$
6	1.19487	-0.690009	1.37980
7	-1.56808	2.71544	3.13568
8	0	-0.08668	0.08668
9	-9.99823	-17.3138	19.9933
10	49.6659	28.6805	57.3521
11	-0.475105	0	0.475105
12	-4.88786×10^{2}	2.82260×10^{2}	5.64431×10^{2}
13	9.67394×10^{2}	-1.67523×10^{3}	1.93449×10^{3}
14	0	4.55469	4.55469
15	1.31501×10^{4}	2.27719×10^{4}	2.62961×10^{4}
16	-8.99173×10^{4}	-5.19245×10^{4}	1.03833×10^{5}
17	67.8254	0	67.8254
18	1.58366×10^{6}	-9.14516×10^{5}	1.82875×10^{6}
19	-4.05504×10^{6}	7.02207×10^{6}	8.10881×10^{6}
20	0	-1.44881×10^{3}	1.44881×10^{3}
21	-8.65467×10^{7}	-1.49903×10^{8}	1.73093×10^{8}
22	7.51322×10^{8}	4.33776×10^{8}	8.67552×10^{8}
23	0	0	0
24	-1.93601×10^{10}	1.11775×10^{10}	2.23551×10^{10}
25	5.97790×10^{10}	-1.03540×10^{11}	1.19558×10^{11}
26	0	0	0
27	1.84938×10^{11}	3.20322×10^{11}	3.69876×10^{11}
28	-1.84935×10^{13}	-1.06772×10^{13}	2.13544×10^{13}
29	0	0	0
30	6.61135×10^{15}	-3.81707×10^{14}	3.87390×10^{14}

Table 27 (Cont'd)

n	a_n	b_n	$\sqrt{a_n^2 + b_n^2}$
31	-2.35990×10^{15}	4.08747×10^{15}	4.71980×10^{15}
32	0	0	0
33	-9.61080×10^{16}	-1.66464×10^{17}	1.69216×10^{17}
34	1.09507×10^{18}	6.32241×10^{17}	1.26448×10^{18}
35	0	0	0
36	-5.02133×10^{19}	2.89907×10^{19}	5.79813×10^{19}
37	2.01857×10^{20}	-3.49626×10^{20}	4.03714×10^{20}
38	0	0	0
39	1.03213×10^{22}	1.78770×10^{22}	2.06426×10^{22}
40	-1.31201×10^{23}	-7.57488×10^{22}	7.57602×10^{22}
41	0	0	0
42	7.49854×10^{24}	-4.32928×10^{24}	8.65857×10^{24}
43	-3.33337×10^{25}	5.77356×10^{25}	6.66674×10^{25}
44	0	0	0
45	-2.06904×10^{27}	-3.58368×10^{27}	4.13808×10^{27}
46	2.88703×10^{28}	1.66683×10^{28}	3.33365×10^{28}
47	0	0	0
48	-1.95595×10^{30}	1.12927×10^{30}	2.25854×10^{30}
49	9.49125×10^{30}	-1.64393×10^{31}	1.89825×10^{31}
50	0	0	0

Section 14
RELATIONS BETWEEN THE INTEGRALS

In this section we will obtain some relations between the integrals. Since

$$v(t) = \frac{1}{2\sqrt{\pi}} \int_{-\infty}^{\infty} \exp\left(ixt + i\frac{1}{3}x^3\right)dx, \quad v'(t) = \frac{i}{2\sqrt{\pi}} \int_{-\infty}^{\infty} x \exp\left(ixt + i\frac{1}{3}x^3\right)dx$$

we have

$$\frac{1}{\sqrt{\pi}} \exp(i\xi_1 t)v(t) = \frac{1}{2\pi} \int_{-\infty}^{\infty} \exp\left[i\xi t + i\frac{1}{3}(\xi - \xi_1)^3\right]d\xi,$$

$$\frac{1}{\sqrt{\pi}} \exp(i\xi_1 t)\, v'(t) = \frac{i}{2\pi} \int_{-\infty}^{\infty} (\xi - \xi_1) \exp\left[i\xi t + i\frac{1}{3}(\xi - \xi_1)^3\right]d\xi \qquad (14.1)$$

Therefore, we see that the integrals

$$f(\xi) = \frac{1}{\sqrt{\pi}} \int_{\Gamma} \frac{\exp(i\xi t)}{w_1(t)}\, dt, \quad g(\xi) = \frac{1}{\sqrt{\pi}} \int_{\Gamma} \frac{\exp(i\xi t)}{w_1'(t)}\, dt$$

are related to the integrals

$$\hat{p}(\xi) = \frac{1}{\sqrt{\pi}} \int_{\Gamma} \exp(i\xi t)\, \frac{v(t)}{w_1(t)}\, dt, \quad \hat{q}(\xi) = \frac{1}{\sqrt{\pi}} \int_{\Gamma} \exp(i\xi t)\, \frac{v'(t)}{w_1'(t)}\, dt$$

in the following manner:

$$\frac{1}{\sqrt{\pi}}\hat{p}(\xi_1) = \frac{1}{2\pi}\int_{-\infty}^{\infty} \exp\left[i\,\frac{1}{3}(\xi-\xi_1)^3\right] f(\xi)\,d\xi,$$

$$\frac{1}{\sqrt{\pi}}\hat{q}(\xi_1) = \frac{i}{2\pi}\int_{-\infty}^{\infty} (\xi-\xi_1)\exp\left[i\,\frac{1}{3}(\xi-\xi_1)^3\right] g(\xi)\,d\xi. \tag{14.2}$$

If we let

$$F(\xi) = \exp\left(i\,\frac{1}{3}\xi^3\right) f(\xi), \qquad G(\xi) = \exp\left(i\,\frac{1}{3}\xi^3\right) g(\xi)$$

we can write

$$\frac{1}{\sqrt{\pi}}\exp\left(i\,\frac{1}{3}\xi_1^3\right)\hat{p}(\xi_1) = \frac{1}{2\pi}\int_{-\infty}^{\infty} \exp\left[(-i\xi^2\xi_1 + i\xi\xi_1^2)\right] F(\xi)\,d\xi$$

$$\frac{1}{\sqrt{\pi}}\exp\left(i\,\frac{1}{3}\xi_1^3\right)\hat{q}(\xi_1) = \frac{i}{2\pi}\int_{-\infty}^{\infty} (\xi-\xi_1)\exp(-i\xi^2\xi_1 + i\xi\xi_1^2)\,G(\xi)\,d\xi.$$

Now write

$$\xi^2\xi_1 - \xi\xi_1^2 = (\xi\sqrt{\xi_1})^2 - 2(\xi\sqrt{\xi_1})\left(\frac{\xi_1^{3/2}}{2}\right) + \frac{\xi_1^3}{4} - \frac{\xi_1^3}{4} = \xi_1\left(\xi - \frac{\xi_1}{2}\right)^2 - \frac{\xi_1^3}{4}$$

and

$$\frac{1}{\sqrt{\pi}}\exp\left(i\,\frac{1}{12}\xi_1^3\right)\hat{p}(\xi_1) = \frac{1}{2\pi}\int_{-\infty}^{\infty} \exp\left[-i\xi_1\left(\xi + \frac{\xi_1}{2}\right)^2\right] F(\xi)\,d\xi$$

$$\frac{1}{\sqrt{\pi}}\exp\left(i\,\frac{1}{12}\xi_1^3\right)\hat{q}(\xi_1) = \frac{i}{2\pi}\int_{-\infty}^{\infty} (\xi-\xi_1)\exp\left[-i\xi_1\left(\xi + \frac{\xi_1}{2}\right)^2\right] G(\xi)\,d\xi$$

Now define a new variable u by the definition

$$\xi = \frac{\xi_1}{2} + \sqrt{\frac{\pi}{-2\xi_1}}\, u$$

$$-\xi_1\left(\xi - \frac{\xi_1}{2}\right)^2 = \frac{\pi}{2} u^2$$

Then we have

$$\frac{1}{\sqrt{\pi}} \exp\left(i \frac{1}{12} \xi_1^3\right) \hat{p}(\xi_1) = \frac{1}{2\pi} \sqrt{\frac{\pi}{-2\xi_1}} \int_{-\infty}^{\infty} \exp\left(i \frac{\pi}{2} u^2\right) F\left(+\frac{\xi_1}{2} + \sqrt{\frac{\pi}{-2\xi_1}}\, u\right) du$$

$$\frac{1}{\sqrt{\pi}} \exp\left(i \frac{1}{12} \xi_1^3\right) \hat{q}(\xi_1) = \frac{1}{2\pi} \sqrt{\frac{\pi}{-2\xi_1}} \int_{-\infty}^{\infty} \left(-\frac{1}{2}\xi_1 + \sqrt{\frac{\pi}{-2\xi_1}}\, u\right) \exp\left(i \frac{\pi}{2} u^2\right) G\left(+\frac{\xi_1}{2} + \sqrt{\frac{\pi}{-2\xi_1}}\, u\right) du. \tag{14.3}$$

If we write

$$F\left(\frac{\xi_1}{2} + \sqrt{\frac{\pi}{-2\xi_1}}\, u\right) = F\left(\frac{\xi_1}{2}\right) + F'\left(\frac{\xi_1}{2}\right) \sqrt{\frac{\pi}{-2\xi_1}}\, u + \frac{1}{2} F''\left(\frac{\xi_1}{2}\right)\left(\frac{\pi}{-2\xi_1}\right) u^2 + \cdots$$

$$\left(-\frac{1}{2}\xi_1 + \sqrt{\frac{\pi}{-2\xi_1}}\, u\right) G\left(\frac{\xi_1}{2} + \sqrt{\frac{\pi}{-2\xi_1}}\, u\right) = -\frac{1}{2}\xi_1 G\left(\frac{\xi_1}{2}\right) + \left\{G\left(\frac{\xi_1}{2}\right) - \frac{1}{2}\xi_1 G'\left(\frac{\xi_1}{2}\right)\right\} \sqrt{\frac{\pi}{-2\xi_1}}\, u$$
$$+ \left\{G'\left(\frac{\xi_1}{2}\right) - \frac{1}{4}\xi_1 G''\left(\frac{\xi_1}{2}\right)\right\} \left(\frac{\pi}{-2\xi_1}\right) u^2 + \cdots$$

And use the properties

$$\int_{-\infty}^{\infty} \exp\left(i \frac{\pi}{2} u^2\right) du = \sqrt{2}\, \exp\left(i \frac{\pi}{4}\right)$$

$$\int_{-\infty}^{\infty} u \exp\left(i \frac{\pi}{2} u^2\right) du = 0$$

$$\int_{-\infty}^{\infty} u^2 \exp\left(i \frac{\pi}{2} u^2\right) du = \frac{\sqrt{2}}{\pi} \exp\left(i \frac{3\pi}{4}\right)$$

we arrive at

$$\exp\left(i\,\frac{1}{12}\,\xi_1^3\right)\hat{p}(\xi_1) = \frac{1}{2}\,\frac{\exp\left(i\,\frac{\pi}{4}\right)}{\sqrt{-\pi}\,\xi_1}\left\{F\left(\frac{\xi_1}{2}\right) - \frac{i}{4\xi_1}\,F''\left(\frac{\xi_1}{2}\right) + \cdots\right\}$$

$$\exp\left(i\,\frac{1}{12}\,\xi_1^3\right)\hat{q}(\xi_1) = \frac{1}{2}\,\frac{\exp\left(-i\,\frac{\pi}{4}\right)}{\sqrt{-\pi}\,\xi_1}\left\{\frac{\xi_1}{2}\,G_1\left(\frac{\xi_1}{2}\right) + \frac{i}{4\xi_1}\left[2G'\left(\frac{\xi_1}{2}\right) - \frac{1}{2}\xi_1\,G''\left(\frac{\xi_1}{2}\right)\right] + \cdots\right\} \tag{14.4}$$

This result is primarily useful for large negative values of ξ_1. For example, since

$$F(\xi) \xrightarrow[\xi \to -\infty]{} 2i\xi\left\{1 - \frac{i}{4\xi^3} + \frac{1}{2\xi^6} + \frac{175}{64}\,\frac{i}{\xi^9} + \cdots\right\}$$

$$G(\xi) \xrightarrow[\xi \to -\infty]{} 2\left\{i + \frac{i}{4\xi^3} - \frac{1}{\xi^6} + \frac{299}{64}\,\frac{i}{\xi^9} + \cdots\right\} \tag{14.5}$$

and

$$F''(\xi) \xrightarrow[\xi \to -\infty]{} \frac{3}{\xi^4} + i\,\frac{30}{\xi^7} - \frac{1575}{4}\,\frac{1}{\xi^{10}} + \cdots$$

$$G'(\xi) \xrightarrow[\xi \to -\infty]{} \frac{3i}{2\xi^4} + \frac{12}{\xi^7} - \frac{2691}{32}\,\frac{i}{\xi^{10}} + \cdots$$

$$G''(\xi) \xrightarrow[\xi \to -\infty]{} \frac{6i}{\xi^5} - \frac{84}{\xi^8} + \frac{13455}{16}\,\frac{i}{\xi^{11}} + \cdots$$

we find that

$$F\left(\frac{\xi_1}{2}\right) - \frac{i}{4\xi_1}\,F''\left(\frac{\xi_1}{2}\right) \xrightarrow[\xi_1 \to -\infty]{} i\xi_1 + \frac{2}{\xi_1^2} + i\,\frac{20}{\xi_1^5} + \cdots$$

$$\frac{\xi_1}{2}\,G_1\left(\frac{\xi_1}{2}\right) + \frac{i}{4\xi_1}\left[2G'\left(\frac{\xi_1}{2}\right) - \frac{1}{2}\xi_1\,G''\left(\frac{\xi_1}{2}\right)\right] \xrightarrow[\xi_1 \to -\infty]{} \xi_1 + i\,\frac{2}{\xi_1^2} - \frac{28}{\xi_1^5} + \cdots$$

Therefore,

$$\exp\left(i\,\frac{1}{12}\,\xi_1^3\right)\hat{p}(\xi_1) \xrightarrow[\xi_1 \to -\infty]{} \frac{1}{2}\sqrt{\frac{-\xi_1}{\pi}}\,\exp\left(i\,\frac{3\pi}{4}\right)\left\{1 - i\,\frac{2}{\xi_1^3} + \frac{20}{\xi_1^6} + \cdots\right\}$$

$$\exp\left(i\,\frac{1}{12}\,\xi_1^3\right)\hat{q}(\xi_1) \xrightarrow[\xi_1 \to \infty]{} \frac{1}{2}\sqrt{\frac{-\xi_1}{\pi}}\,\exp\left(-i\,\frac{\pi}{4}\right)\left\{1 + i\,\frac{2}{\xi_1^3} - \frac{28}{\xi_1^6} + \cdots\right\} \qquad (14.6)$$

We can also show that the integrals

$$\hat{u}(\xi) = \frac{1}{\sqrt{\pi}}\int_{-\infty}^{\infty}\exp(i\xi t)\,\frac{w_1'(t)}{w_1(t)}\,dt \qquad \hat{v}(\xi) = \frac{1}{\sqrt{\pi}}\int_{-\infty}^{\infty}\exp(i\xi t)\,\frac{w_1(t)}{w_1'(t)}\,dt$$

are related to the integrals

$$f(\xi) = \frac{1}{\sqrt{\pi}}\int_{-\infty}^{\infty}\exp(i\xi t)\,\frac{1}{w_1(t)}\,dt \qquad g(\xi) = \frac{1}{\sqrt{\pi}}\int_{-\infty}^{\infty}\exp(i\xi t)\,\frac{1}{w_1'(t)}\,dt$$

in the following manner:

$$f(\xi_1) + \frac{1}{\sqrt{\pi}}\int_{-\infty}^{\infty}\exp(i\xi_1 t)\,v'(t)\,dt = \frac{1}{2\sqrt{\pi}}\int_{-\infty}^{\infty}\exp\left[i\,\frac{1}{3}(\xi - \xi_1)^3\right]\hat{u}(\xi)\,d\xi$$

$$g(\xi_1) - \frac{1}{\sqrt{\pi}}\int_{-\infty}^{\infty}\exp(i\xi_1 t)\,v(t)\,dt = -\frac{i}{2\sqrt{\pi}}\int_{-\infty}^{\infty}(\xi - \xi_1)\exp\left[i\,\frac{1}{3}(\xi - \xi_1)^3\right]\hat{v}(\xi)\,d\xi\ .$$

Since

$$\frac{1}{\sqrt{\pi}}\int_{-\infty}^{\infty}\exp(i\xi t)\,v(t)\,dt = \exp\left(-i\,\frac{1}{3}\,\xi^3\right)$$

$$\frac{1}{\sqrt{\pi}}\int_{-\infty}^{\infty}e(i\xi t)\,v'(t)\,dt = -i\xi\,\exp\left(-i\,\frac{1}{3}\,\xi^3\right)$$

we can write

$$f(\xi_1) = i\xi_1 \exp\left(-i\frac{1}{3}\xi_1^3\right) + \frac{1}{2\sqrt{\pi}}\int_{-\infty}^{\infty} \exp\left[i\frac{1}{3}(\xi-\xi_1)^3\right]\hat{u}(\xi)\,d\xi$$

$$g(\xi) = \exp\left(-i\frac{1}{3}\xi_1^3\right) - \frac{i}{2\sqrt{\pi}}\int_{-\infty}^{\infty} (\xi-\xi_1)\exp\left[i\frac{1}{3}(\xi-\xi_1)^3\right]\hat{v}(\xi)\,d\xi\ . \qquad (14.7)$$

We remark that $\hat{u}(\xi)$ and $\hat{v}(\xi)$ are even functions of ξ .

We can also write

$$\exp\left(i\frac{1}{3}\xi_1^3\right) f(\xi_1) = F(\xi_1) - i\xi_1 + \frac{1}{2\sqrt{\pi}}\int_{-\infty}^{\infty} \exp(-i\xi^2\xi_1 + i\xi\xi_1^2 + i\frac{1}{3}\xi^3)\,u(\xi)\,d\xi$$

$$\exp\left(i\frac{1}{3}\xi_1^3\right) g(\xi_1) = G(\xi_1) = 1 - \frac{i}{2\sqrt{\pi}}\int_{-\infty}^{\infty} (\xi-\xi_1)\exp(-i\xi^2\xi_1 + i\xi\xi_1^2 + i\frac{1}{3}\xi^3)\,v(\xi)\,d\xi \qquad (14.8)$$

Near $\xi = 0$,

$$\hat{u}(\xi) \approx -\frac{2}{\sqrt{\pi}}\int_{-\infty}^{\infty} \exp(i\xi t)\,w_1'(t)\,v'(t)\,dt = 2\left\{\frac{\xi^2}{4} - \frac{i}{2\xi}\right\}\frac{\exp\left(i\frac{\pi}{4}\right)}{\sqrt{\xi}}\exp\left(-i\frac{1}{12}\xi^3\right)$$

$$\hat{v}(\xi) \approx \frac{2}{\sqrt{\pi}}\int_{-\infty}^{\infty} \exp(i\xi t)\,w_1(t)\,v(t)\,dt = 2\,\frac{\exp\left(i\frac{\pi}{4}\right)}{\sqrt{\xi}}\exp\left(-i\frac{1}{12}\xi^3\right)$$

If we define

$$U(\xi) = \exp i\frac{1}{12}\xi^3\,\hat{u}(\xi) \approx 2\left\{\frac{\xi^2}{4} - \frac{i}{2\xi}\right\}\frac{\exp\left(i\frac{\pi}{4}\right)}{\sqrt{\xi}}$$

$$V(\xi) = \exp i\frac{1}{12}\xi^3\,\hat{v}(\xi) \approx 2\,\frac{\exp\left(i\frac{\pi}{4}\right)}{\sqrt{\xi}}$$

we can write

$$F(\xi_1) = i\xi_1 + \frac{1}{2\sqrt{\pi}} \int_{-\infty}^{\infty} \exp\left(-i\xi^2\xi_1 + i\xi\xi_1^2 + i\frac{1}{4}\xi^3\right) U(\xi)\, d\xi$$

$$G(\xi_1) = 1 - \frac{i}{2\sqrt{\pi}} \int_{\infty}^{\infty} (\xi - \xi_1) \exp\left(-i\xi^2\xi_1 + i\xi\xi_1^2 + i\frac{1}{4}\xi^3\right) V(\xi)\, d\xi \ . \quad (14.9)$$

Now write

$$\frac{1}{4}\xi^3 - \xi^2\xi_1 + \xi\xi_1^2 = \frac{1}{4}(\xi - 2\xi_1)^3 + \frac{\xi_1}{2}(\xi - 2\xi_1)^2$$

so that if we let

$$\xi = 2\xi_1 + \sqrt{\frac{\pi}{\xi_1}}\, u$$

$$\frac{\xi_1}{2}(\xi - 2\xi_1)^2 = \frac{\pi}{2} u^2$$

we can write

$$F(\xi_1) = i\xi_1 + \frac{1}{2}\frac{1}{\sqrt{\xi_1}} \int_{-\infty}^{\infty} \exp\left(i\frac{\pi^3}{4\xi_1^3} u^3\right) \exp\left(i\frac{\pi}{2}u^2\right) U\left(2\xi_1 + \sqrt{\frac{\pi}{\xi_1}}\, u\right) du$$

$$G(\xi_1) = 1 - \frac{i}{2}\frac{1}{\sqrt{\xi_1}} \int_{-\infty}^{\infty} \left(\xi_1 + \sqrt{\frac{\pi}{\xi_1}}\, u\right) \exp\left(i\frac{\pi^3}{4\xi_1^3} u^3\right) \exp\left(i\frac{\pi}{2}u^2\right) V\left(2\xi_1 + \sqrt{\frac{\pi}{\xi_1}}\, u\right) du.$$

Now consider the case for which ξ_1 is moderately large and write

$$\exp\left(i\frac{\pi^3}{4\xi_1^3} u^3\right) = 1 + i\frac{\pi^3}{4\xi_1^3} u^3 + \cdots$$

$$U\left(2\xi_1 + \sqrt{\frac{\pi}{\xi_1}}\,u\right) = U(2\xi_1) + U'(2\xi_1)\sqrt{\frac{\pi}{\xi_1}}\,u + \frac{\pi}{2\xi_1}\,U''(2\xi_1)u^2 + \cdots$$

$$\left(\xi_1 + \sqrt{\frac{\pi}{\xi_1}}\,u\right) V\left(2\xi_1 + \sqrt{\frac{\pi}{\xi_1}}\,u\right) = \xi_1\,V(2\xi_1) + \left[V(2\xi_1) + \xi_1\,V'(2\xi_1)\right]\sqrt{\frac{\pi}{\xi_1}}\,u$$

$$+ \frac{\pi}{2\xi_1}\left[2V'(2\xi_1) + \xi_1\,V''(2\xi_1)\right]u^2 + \cdots$$

We then find that since

$$\int_{-\infty}^{\infty} \exp\left(i\,\frac{\pi}{2}\,u^2\right)du = \sqrt{2}\,\exp\left(i\,\frac{\pi}{4}\right)$$

$$\int_{-\infty}^{\infty} u\,\exp\left(i\,\frac{\pi}{2}\,u^2\right)du = 0 \qquad \ldots$$

$$\int_{\infty}^{\infty} u^2\,\exp\left(i\,\frac{\pi}{2}\,u^2\right)du = \frac{\sqrt{2}}{\pi}\,\exp\left(i\,\frac{3\pi}{4}\right)$$

we have

$$F(\xi_1) = i\,\xi_1 + \frac{\exp\left(i\,\frac{\pi}{4}\right)}{\sqrt{2\xi_1}}\left\{U(2\xi_1) + \frac{i}{2\xi_1}\,U''(2\xi_1) + \cdots\right\}$$

$$G(\xi_1) = 1 + \sqrt{\frac{\xi_1}{2}}\,\exp\left(-i\,\frac{\pi}{4}\right)\left\{V(2\xi_1) + \frac{i}{2\xi_1^2}\left[2V'(2\xi_1) + \xi_1\,V''(2\xi_1)\right] + \cdots\right\}$$

Since

$$U(2\xi_1) \to \sqrt{\frac{2}{\xi_1}} \left\{ \xi_1^2 - \frac{i}{4\xi_1} \right\} \exp\left(i \frac{\pi}{4}\right)$$

$$V(2\xi_1) \to \sqrt{\frac{2}{\xi_1}} \exp\left(i \frac{\pi}{4}\right)$$

we obtain

$$F(\xi_1) \to 2 i \xi_1 ,$$

$$G(\xi_1) \to 2 .$$

The results in this section reveal that $u(\xi)$ and $v(\xi)$ are the basic functions, and, at least in principle, the functions $f(\xi)$, $g(\xi)$ and $\hat{p}(\xi)$, $\hat{q}(\xi)$ can be considered to be integrals of $u(\xi)$, $v(\xi)$. However, except for the asymptotic formula discussed above, no practical use (for the purpose of computing f, g, $\hat{p}$, $\hat{q}$) for these relations has been found. However, from a theoretical point of view, these relations are of great value.

Section 15
REPRESENTATIONS FOR GENERALIZED INTEGRALS

The Fourier integrals

$$F(x,y_o,y,\delta) = \frac{\partial^2}{\partial y\,\partial y_o} G\left(x,y_o,y,\frac{1}{\delta}\right)$$

$$G(x,y_o,y,q) = \frac{1}{2\pi}\int_{-\infty}^{\infty} \exp(ixt)\left[w_1(t-y_>)\,v(t-y_<) - \frac{v'(t)-q\,v(t)}{w_1'(t)-q\,w_1(t)}\,w_1(t-y_o)w_1(t-y)\right]dt \tag{15.1}$$

play an important role in the theory of diffraction by convex surfaces and in the theory of propagation over plane surfaces above which the index of refraction increases linearly with height. The functions appearing in the integrand are the Airy integrals

$$v(t) = \frac{1}{\sqrt{\pi}}\int_0^{\infty} \cos\left(\frac{1}{3}x^3 + xt\right)dx$$

$$w_1(t) = \frac{1}{\sqrt{\pi}}\int_0^{\infty} \exp\left(-\frac{1}{3}t^3 + xt\right)dx + \frac{i}{\sqrt{\pi}}\int_0^{\infty} \exp\left[-i\left(\frac{1}{3}x^3 + xt\right)\right]dx.$$

We can show that $G(x,y_o,y,q)$ is the solution of the inhomogeneous diffusion equation

$$\frac{\partial^2 G}{\partial y^2} + i\,\frac{\partial G}{\partial x} + y\,G = -\,\delta(x)\,\delta(y-y_o) \qquad \begin{array}{l} 0 \le y < \infty \\ 0 < x < \infty \end{array} \tag{15.2}$$

which has the property

$$\left(\frac{\partial G}{\partial y} + q\,G\right)_{y=0} = 0$$

and which, for $y \gg y_o$, has the property that

$$\frac{\partial}{\partial y} \arg G > 0 ,$$

i.e., the phase of G increases with an increase of y, provided $y \gg y_o$.

The integrals can be evaluated in the form of a series of residues

$$\begin{aligned} F(x, y_o, y, \delta) &= -\sum_{s=1}^{\infty} \frac{\exp(ixt_s)}{t_s - q^2} \frac{w_1'(t_s - y)}{w_1(t_s)} \frac{w_1'(t_s - y_o)}{w_1(t_s)} \\ &= \sum_{s=1}^{\infty} \frac{\exp(ixt_s)}{1 - (t_s/q^2)} \frac{w_1'(t_s - y)}{w_1'(t_s)} \frac{w_1'(t_s - y_o)}{w_1'(t_s)} \\ G(x, y_o, y, q) &= \sum_{s=1}^{\infty} \frac{\exp(ixt_s)}{t_s - q^2} \frac{w_1(t_s - y)}{w_1(t_s)} \frac{w_1(t_s - y_o)}{w_1(t_s)} \qquad (15.3) \\ &= \sum_{s=1}^{\infty} \frac{\exp(ixt_s)}{1 - (t_s/q^2)} \frac{w_1(t_s - y)}{w_1'(t_s)} \frac{w_1(t_s - y_o)}{w_1'(t_s)} \end{aligned}$$

where t_s denotes the roots of

$$w_1'(t_s) - q\, w_1(t_s) = 0.$$

In order to obtain these forms we have made use of the fact $w_1(t)$ and $v(t)$ are solutions of the differential equations

$$w_1''(t) = t\, w_1(t), \qquad v''(t) = t\, v(t)$$

which have the Wronskian

$$v(t)\, w_1'(t) - v'(t)\, w_1(t) = 1.$$

We call the fields

$$F_o(x, y_o, y) = \frac{\exp\left(-i\frac{\pi}{4}\right)}{4x\sqrt{\pi x}} \left\{1 - i\frac{(y-y_o)^2}{2x} - i\frac{x^3}{2}\right\} \exp\left[i\frac{x^3}{12} + i\frac{x}{2}(y+y_o) + i\frac{(y-y_o)^2}{4x}\right]$$

$$= \frac{1}{2\pi}\int_{-\infty}^{\infty} \exp(ixt)\, w_1'(t - y_>)\, v'(t - y_<)\, dt$$

$$G_o(x, y_o, y) = \frac{\exp\left(i\frac{\pi}{4}\right)}{2\sqrt{\pi x}} \exp\left[-i\frac{x^3}{12} + i\frac{x}{2}(y+y_o) + i\frac{(y-y_o)^2}{4x}\right]$$

$$= \frac{1}{2\pi}\int_{-\infty}^{\infty} \exp(ixt)\, w_1(t - y_>)\, v(t - y_<)\, dt \qquad (15.4)$$

the <u>primary</u> fields or the "<u>point source</u>" fields. We can show that

$$F(x,0,0,0) \xrightarrow[x \to 0]{} 2F_o(x,0,0) = \frac{\exp\left(-i\frac{\pi}{4}\right)}{2x\sqrt{\pi x}} \left(1 - i\frac{x^3}{2}\right) \exp\left(-i\frac{x^3}{12}\right),$$

$$G(x,0,0,0) \xrightarrow[x \to 0]{} 2G_o(x,0,0) = \frac{\exp\left(i\frac{\pi}{4}\right)}{\sqrt{\pi x}} \exp\left(-i\frac{x^3}{12}\right) \qquad (15.5)$$

It is convenient to renormalize $F(x, y_o, y; \delta)$ and $G(x, y_o, y, q)$ by defining

$$U(x, y_o, y, \delta) = 4x\sqrt{\pi x}\, \exp\left(i\frac{\pi}{4}\right) F\left(x, y_o, y, \frac{1}{\delta}\right)$$

$$V(x, y_o, y, q) = 2\sqrt{\pi x}\, \exp\left(-i\frac{\pi}{4}\right) G(x, y_o, y, q) \qquad (15.6)$$

It is also convenient to introduce the special functions $U_o(x, \delta)$ and $V_o(x, q)$ defined by

$$U(x,0,0,\delta) = 2\, U_o(x,\delta)$$

$$V(x,0,0,q) = 2\, V_o(x,q) \tag{15.7}$$

or

$$\boxed{\begin{aligned} U_o(x,\delta) &= -\exp\left(i\,\frac{\pi}{4}\right)\frac{x^{3/2}}{\sqrt{\pi}}\int_{-\infty}^{\infty}\exp(ixt)\,\frac{w_1'(t)}{w_1(t)-\delta\, w_1'(t)}\,dt \\ V_o(x,q) &= \frac{\exp\left(-i\,\frac{\pi}{4}\right)}{2}\sqrt{\frac{x}{\pi}}\int_{-\infty}^{\infty}\exp(ixt)\,\frac{w_1(t)}{w_1'(t)-q\, w_1(t)}\,dt \end{aligned}} \tag{15.8}$$

We can show that

$$U_o(0,\delta) = 1$$

$$V_o(0,q) = 1 \tag{15.9}$$

If we let $y_o \to \infty$, we can introduce the asymptotic estimates

$$w_1(t-y_o) \xrightarrow[y_o \to \infty]{} \exp\left(i\,\frac{\pi}{4}\right) y_o^{-1/4} \exp\left(i\,\frac{2}{3}\, y_o^{3/2} - i\sqrt{y_o}\, t\right)$$

$$w_1'(t-y_o) \xrightarrow[y_o \to \infty]{} \exp\left(-i\,\frac{\pi}{4}\right) y_o^{1/4} \exp\left(i\,\frac{2}{3}\, y_o^{3/2} - i\sqrt{y_o}\, t\right) \tag{15.10}$$

to obtain

$$F(x,\infty,y,\delta) = -\exp\left(-i\,\frac{\pi}{4}\right) y_o^{1/4} \exp\left(i\,\frac{2}{3}\, y_o^{3/2}\right) \frac{1}{2\sqrt{\pi}}\, F_1(\xi,y,\delta)$$

$$G(x,\infty,y,q) = \exp\left(i\,\frac{\pi}{4}\right) y_o^{-1/4} \exp\left(i\,\frac{2}{3}\, y_o^{3/2}\right) \frac{1}{2\sqrt{\pi}}\, G_1(\xi,y,q) \tag{15.11}$$

where

$$\xi = x - \sqrt{y_o}$$

and

$$F_1(\xi, y, \delta) = -\frac{1}{\sqrt{\pi}} \int_{-\infty}^{\infty} \exp(i\xi t) \left\{ v'(t-y) - \frac{v(t) - \delta\, v'(t)}{w_1(t) - \delta\, w_1'(t)}\, w_1'(t-y) \right\} dt$$

$$G_1(\xi, y, q) = \frac{1}{\sqrt{\pi}} \int_{-\infty}^{\infty} \exp(i\xi t) \left\{ v(t-y) - \frac{v'(t) - q\, v(t)}{w_1'(t) - q\, w_1(t)}\, w_1(t-y) \right\} dt \qquad (15.12)$$

We call the fields

$$F_o(\xi, y) = -\frac{1}{\sqrt{\pi}} \int_{-\infty}^{\infty} \exp(i\xi t)\, v'(t-y)\, dt = i\xi \exp\left(i\xi y - i\frac{\xi^3}{3}\right)$$

$$G_o(\xi, y) = \frac{1}{\sqrt{\pi}} \int_{-\infty}^{\infty} \exp(i\xi t)\, v(t-y)\, dt = \exp\left(i\xi y - i\frac{\xi^3}{3}\right) \qquad (15.13)$$

the <u>primary</u> fields or the "<u>plane wave</u>" fields. We observe that $G_1(\xi, y, q)$ satisfies the diffusion equation

$$\frac{\partial^2 G_1}{\partial y^2} + i\frac{\partial G_1}{\partial \xi} + y\, G_1 = 0$$

and the boundary condition

$$\left(\frac{\partial G_1}{\partial y} + q\, G_1\right)_{y=o} = 0.$$

Also, we observe that

$$F_1(\xi, y, \delta) = \frac{\partial}{\partial y}\, G_1(\xi, y, 1/\delta). \qquad (15.14)$$

For $y = 0$ we define the special functions $U_1(\xi,\delta)$ $V_1(\xi,q)$ as follows

$$\boxed{\begin{aligned} U_1(\xi,\delta) &= F_1(\xi,0,\delta) = \frac{1}{\sqrt{\pi}} \int_{-\infty}^{\infty} \exp(i\xi t) \frac{1}{w_1(t) - \delta w_1'(t)}\, dt \\ V_1(\xi,q) &= G_1(\xi,0,q) = \frac{1}{\sqrt{\pi}} \int_{-\infty}^{\infty} \exp(i\xi t) \frac{1}{w_1'(t) \quad q w_1(t)}\, dt \end{aligned}} \qquad (15.15)$$

For $y \to \infty$ we find that

$$\begin{aligned} F_1(\xi,y,\delta) &\xrightarrow[y\to\infty]{} \frac{\partial}{\partial y} G_1(\xi,y) + i\, y^{1/4} \exp\left(i \frac{2}{3} y^{3/2}\right) U_2(z,\delta) \\ G_1(\xi,y,q) &\xrightarrow[y\to\infty]{} G_1(\xi,y) + y^{-1/4} \exp\left(i \frac{2}{3} y^{3/2}\right) V_2(z,q) \end{aligned} \qquad (15.16)$$

where

$$z = \xi - \sqrt{y}$$

and

$$U_2(z,\delta) = V_2(z, \frac{1}{\delta})$$

and

$$\boxed{V_2(z,q) = -\frac{\exp\left(i \frac{\pi}{4}\right)}{\sqrt{\pi}} \int_{-\infty}^{\infty} \exp(izt) \frac{v'(t) - q\, v(t)}{w_1'(t) - q\, w_1(t)}\, dt - \frac{\exp\left(i \frac{\pi}{4}\right)}{2\sqrt{\pi}\, z}} \qquad (15.17)$$

The function $G_1(\xi\ y)$ is defined by

$$\begin{aligned} G_1(\xi,y) &= \exp\left(i\xi y - i \frac{\xi^3}{3}\right) + \frac{1}{y^{1/4}} \exp\left(i \frac{2}{3} y^{3/2}\right)\left[- \mu\, K(-\tau)\right], \quad z < 0 \\ &= \frac{1}{y^{1/4}} \exp\left(i \frac{2}{3} y^{3/2}\right) \mu\, K(\tau) \qquad\qquad , z > 0 \end{aligned} \qquad (15.18)$$

where

$$\tau = \mu z , \qquad \mu = \sqrt[4]{\ } , \tag{15.19}$$

and $K(\tau)$ is the modified Fresnel integral

$$\boxed{K(\tau) = \exp\left(-i\tau^2 - i\frac{\pi}{4}\right)\frac{1}{\sqrt{\pi}}\int_{\tau}^{\infty} \exp(i s^2)\, ds} \tag{15.20}$$

We also observe that if y_o is large, but not infinite, we can write

$$V(x, y_o y, q) \xrightarrow[y_o \to \infty]{y \to \infty} H(x, y, y_o) + \sqrt[4]{\frac{\xi^2}{y y_o}} \exp\left[i\frac{2}{3}\left(y^{3/2} + y_o^{3/2}\right)\right] V_2(z, q) \tag{15.21}$$

where

$$z = x - \sqrt{y_o} - \sqrt{y} = \xi - \sqrt{y}$$

and

$$H(x, y, y_o) = \exp\left[i - \frac{x^3}{12} + \frac{x}{2}(y_1 + y_2) + \frac{(y_1 - y_2)^2}{4x}\right]$$

$$+ \sqrt[4]{\frac{\xi^2}{y y_o}} \exp\left[i\frac{2}{3}\left(y^{3/2} + y_o^{3/2}\right)\right]\left[-\mu K(-\tau)\right], \quad z < o$$

$$= \sqrt[4]{\frac{\xi^2}{y y_o}} \exp\left[i\frac{2}{3}\left(y^{3/2} + y_o^{3/2}\right)\right] \mu K(\tau), \quad z > o \tag{15.22}$$

where

$$\tau = \mu z, \quad \mu = \sqrt{\frac{\sqrt{y}\sqrt{y_o}}{\sqrt{y} + \sqrt{y_o}}} \tag{15.23}$$

It is also convenient to define

$$U_{11}(z,\delta) = V_{11}\left(z,\frac{1}{\delta}\right)$$

$$\boxed{V_{11}(z,q) = -\frac{\exp\left(i\,\frac{\pi}{4}\right)}{\sqrt{\pi}} \int_{-\infty}^{\infty} \exp(izt)\,\frac{v'(t) - q\,v(t)}{w_1'(t) - q\,w_1(t)}\,dt} \qquad (15.24)$$

For large values of τ

$$\mu\,K(\tau) + V_2(z,q) \xrightarrow[\tau \to \infty]{} V_{11}(z,q)$$

$$-\mu\,K(-\tau) + V_2(z,q) \xrightarrow[\tau \to -\infty]{} V_{11}(z,q)$$

since

$$K(\pm\,|\,\tau\,|) \xrightarrow[\tau \to \infty]{} \frac{\exp\left(i\,\frac{\pi}{4}\right)}{\pm\,2\sqrt{\pi}\,|\,\tau\,|}$$

In order to evaluate the special functions defined above we write

$$U_o(x,\delta) = -\exp\left(i\,\frac{\pi}{4}\right)\frac{x^{3/2}}{\sqrt{\pi}} \int_{-\infty}^{\infty} \exp(ixt)\,\frac{w_1'(t)}{w_1(t) - \delta\,w_1'(t)}\,dt = \exp\left(-i\,\frac{\pi}{4}\right)2\sqrt{\pi}\,x^{3/2}\,J(x,\delta)$$

$$V_o(x,q) = \frac{\exp\left(-i\,\frac{\pi}{4}\right)}{2}\cdot\sqrt{\frac{x}{\pi}} \int_{-\infty}^{\infty} \exp(ixt)\,\frac{w_1(t)}{w_1'(t) - q\,w_1(t)}\,dt = \exp\left(i\,\frac{\pi}{4}\right)\sqrt{\pi x}\;K(x,q)$$

$$U_1(\xi,\delta) = f(\xi,\delta)$$

$$V_1(\xi,q) = g(\xi,q)$$

$$U_{11}(z,\delta) = -\exp\left(i\,\frac{\pi}{4}\right) r(\xi,\delta)$$

$$V_{11}(z,q) = -\exp\left(i\,\frac{\pi}{4}\right) s(\xi,q) \qquad (15.25)$$

where the functions we have now introduced have the properties that

$$J(\xi, \alpha) = \frac{1}{2\pi i} \int_\Gamma \exp(i\xi t) \frac{w_1'(t)}{w_1(t) - \alpha w_1'(t)} dt = \sum_{m=o}^{\infty} J_m(\xi) \alpha^m$$

$$f(\xi, \alpha) = \frac{1}{\sqrt{\pi}} \int_\Gamma \exp(i\xi t) \frac{1}{w_1(t) - \alpha w_1'(t)} dt = \sum_{m=o}^{\infty} f_m(\xi) \alpha^m$$

$$r(\xi, \alpha) = \frac{1}{\sqrt{\pi}} \int_\Gamma \exp(i\xi t) \frac{v(t) - \alpha v'(t)}{w_1(t) - \alpha w_1'(t)} dt = \frac{1}{\sqrt{\pi}} \int_\Gamma \exp(i\xi t) \frac{v(t)}{w_1(t)} dt + \sum_{m=o}^{\infty} r_m(\xi) \alpha^{m+1}$$

$$K(\xi, \beta) = \frac{1}{2\pi i} \int_\Gamma \exp(i\xi t) \frac{w_1(t)}{w_1'(t) - \beta w_1(t)} dt = \sum_{m=o}^{\infty} K_m(\xi) \beta^m \qquad (15.26)$$

$$g(\xi, \beta) = \frac{1}{\sqrt{\pi}} \int_\Gamma \exp(i\xi t) \frac{1}{w_1'(t) - \beta w_1(t)} dt = \sum_{m=o}^{\infty} g_m(\xi) \beta^m$$

$$s(\xi, \beta) = -\frac{1}{\sqrt{\pi}} \int_\Gamma \exp(i\xi t) \frac{v'(t) - \beta v(t)}{w_1'(t) - \beta w_1(t)} dt = -\frac{1}{\sqrt{\pi}} \int_\Gamma \exp(i\xi t) \frac{v'(t)}{w_1'(t)} dt + \sum_{m=o}^{\infty} s_m(\xi) \beta^{m+1}$$

These functions can be represented in the form of residue series. Let

$$\left.\begin{aligned} w_1(\tau_s) - \alpha w_1'(\tau_s) &= 0 \\ w_1'(\tau_s) - \beta w_1(t_s) &= 0 \end{aligned}\right\} , \quad s = 1, 2, 3, \cdots$$

Then we can write

$$J(\xi, \alpha) = \sum_{s=1}^{\infty} \frac{\exp(i\xi\,\tau_s)}{1 - \alpha^2 \tau_s} \qquad K(\xi, \beta) = \sum_{s=1}^{\infty} \frac{\exp(i\xi\, t_s)}{t_s - \beta^2}$$

$$f(\xi, \alpha) = 2\sqrt{\pi}\, i \sum_{s=1}^{\infty} \frac{\exp(i\xi\,\tau_s)}{1 - \alpha^2 \tau_s} \frac{1}{w_1'(\tau_s)} \qquad g(\xi, \beta) = 2\sqrt{\pi}\, i \sum_{s=1}^{\infty} \frac{\exp(i\xi\, t_s)}{t_s - \beta^2} \frac{1}{w_1(t_s)}$$

$$r(\xi, \alpha) = 2\sqrt{\pi}\, i \sum_{s=1}^{\infty} \frac{\exp(i\xi\,\tau_s)}{1 - \alpha^2 \tau_s} \frac{1}{\left[w_1'(\tau_s)\right]^2} \qquad s(\xi, \beta) = 2\sqrt{\pi}\, i \sum_{s=1}^{\infty} \frac{\exp(i\xi\, t_s)}{t_s - \beta^2} \frac{1}{\left[w_1(t_s)\right]^2} \tag{15.27}$$

Let us now observe that if

$$w_1(\tau_s) - \alpha\, w_1'(\tau_s) = 0$$

then since

$$w_1''(\tau) = \tau\, w_1(\tau)$$

we find that

$$w_1'(\tau_s) \frac{d\tau_s}{d\alpha} - w_1'(\tau_s) - \alpha\, w_1''(\tau_s) \frac{d\tau_s}{d\alpha} = 0$$

or

$$\frac{d\tau_s}{d\alpha} = \frac{1}{1 - \alpha^2 \tau_s} \tag{15.28}$$

If we define t_s^{∞} to be the solution of

$$w_1(t_s^{\infty}) = 0 \tag{15.29}$$

and t_s^o to be the solution of

$$w_1'(t_s^o) = 0 \tag{15.30}$$

then we can write the limiting forms of $\tau_s(\alpha)$ in the form

$$\tau_s(0) = t_s^\infty$$

We can then use the differential equation to show that

$$\tau_s(\alpha) = t_s^\infty + \alpha + \frac{1}{3} t_s^\infty \alpha^3 + \frac{1}{4} \alpha^4 + \frac{1}{5} (t_s^\infty)^2 \alpha^5 + \frac{7}{18} (t_s^\infty) \alpha^6 + \left(\frac{(t_s)^3}{7} + \frac{5}{28} \right) \alpha^7 + \cdots \tag{15.31}$$

We can also show that

$$\frac{dt_s}{d\beta} = \frac{1}{t_s - \beta^2}$$

We define t_s^o to be the solution of

$$w_1'(t_s^o) = 0.$$

The differential equation then leads to

$$t_s(\beta) = t_s^o + \frac{1}{t_s^o} \beta - \frac{1}{2(t_s^o)^3} \beta^2 + \left(\frac{1}{3(t_s^o)^2} + \frac{1}{2(t_s^o)^5} \right) \beta^3$$

$$- \left(\frac{7}{12(t_s^o)^4} + \frac{5}{8(t_s^o)^7} \right) \beta^4 + \left(\frac{1}{5(t_s^o)^3} + \frac{21}{20(t_s^o)^6} + \frac{7}{8(t_s^o)^9} \right) \beta^5 + \cdots \tag{15.32}$$

From the properties

$$w_1'(\tau_s) = w_1'(t_s^\infty)\left\{1 + \frac{1}{2} t_s^\infty (\tau_s - t_s^\infty)^2 + \frac{1}{3}(\tau_s - t_s^\infty)^3 + \frac{(t_s^\infty)^2}{24}(\tau_s - t_s^\infty)^4 + \frac{t_s^\infty}{20}(\tau_s - t_s^\infty)^5 + \cdots\right\}$$

$$w_1(t_s) = w_1(t_s^o)\left\{1 + \frac{1}{2} t_s^o (t_s - t_s^o)^2 + \frac{1}{6}(t_s - t_s^o)^3 + \frac{(t_s^o)^2}{24}(t_s - t_s^o)^4 + \frac{t_s^o}{30}(t_s - t_s^o)^5 + \cdots\right\}$$

we find that

$$w_1'(\tau_s) = w_1'(t_s^\infty)\left\{1 + \frac{t_s^\infty}{2}\alpha^2 + \frac{1}{3}\alpha^3 + \frac{3}{8}(t_s^\infty)^2\alpha^4 + \frac{19}{30}(t_s^\infty)\alpha^5 + \cdots\right\}$$

$$w_1(t_s) = w_1(t_s^o)\left\{1 + \frac{1}{2t_s^o}\beta^2 - \frac{1}{3(t_s^o)^3}\beta^3 + \left(\frac{3}{8(t_s^o)^2} + \frac{3}{8(t_s^o)^5}\right)\beta^4 - \left(\frac{19}{30(t_s^o)^4} + \frac{1}{2(t_s^o)^7}\right)\beta^5 + \cdots\right\} \tag{15.33}$$

We can also show that

$$\frac{1}{1 - \alpha^2\tau_s} = 1 + t_s^\infty\alpha^2 + \alpha^3 + (t_s^\infty)^2\alpha^4 + \frac{7}{3}(t_s^\infty)\alpha^5 + \cdots$$

$$\frac{1}{t_s - \beta^2} = \frac{1}{t_s^o} - \frac{1}{(t_s^o)^3}\beta + \left(\frac{1}{(t_s^o)^2} + \frac{3}{2(t_s^o)^5}\right)\beta^2 - \left(\frac{7}{3(t_s^o)^4} + \frac{5}{2(t_s^o)^7}\right)\beta^3 + \left(\frac{1}{(t_s^o)^3} + \frac{21}{4(t_s^o)^6} + \frac{35}{8(t_s^o)^9}\right)\beta^4 - \left(\frac{58}{15(t_s^o)^5} + \frac{231}{20(t_s^o)^8} + \frac{63}{8(t_s^o)^{11}}\right)\beta^5 + \cdots \tag{15.34}$$

and

$$\exp(i\xi\tau_s) = \exp(i\xi t_s^\infty)\Big\{1 + i\xi\alpha - \frac{1}{2}\xi^2\alpha^2 + \left(\frac{1}{3}i\xi(t_s^\infty) - \frac{1}{6}i\xi^3\right)\alpha^3$$

$$+ \left(\frac{1}{4}i\xi - \frac{1}{3}\xi^2(t_s^\infty) + \frac{1}{24}\xi^4\right)\alpha^4$$

$$+ \left(\frac{1}{5}i\xi(t_s^\infty)^2 - \frac{1}{6}i\xi^3(t_s^\infty) + \frac{1}{120}i\xi^5 - \frac{1}{4}\xi^2\right)\alpha^5 + \cdots\Big\} \quad (15.35)$$

$$\exp(i\xi t_s) = \exp(i\xi t_s^o)\Bigg\{1 + i\xi\frac{1}{t_s^o}\beta - \left(\xi^2\frac{1}{2(t_s^o)^2} + i\xi\frac{1}{2(t_s^o)^3}\right)\beta^2$$

$$+ \left(i\xi\frac{1}{3(t_s^o)^2} - i\xi^3\frac{1}{6(t_s^o)^3} + \xi^2\frac{1}{2(t_s^o)^4} + i\xi\frac{1}{2(t_s^o)^5}\right)\beta^3$$

$$- \Bigg(\xi^2\frac{1}{3(t_s^o)^3} - \xi^4\frac{1}{24(t_s^o)^4} + i\xi\frac{7}{12(t_s^o)^4} - i\xi^3\frac{1}{4(t_s^o)^5}$$

$$+ \xi^2\frac{5}{8(t_s^o)^6} + i\xi\frac{5}{8(t_s^o)^7}\Bigg)\beta^4$$

$$+ \Bigg(i\xi\frac{1}{5(t_s^o)^3} - i\xi^3\frac{1}{6(t_s^o)^4} + i\xi^5\frac{1}{120(t_s^o)^5}$$

$$+ \xi^2\frac{3}{4(t_s^o)^5} + i\xi\frac{21}{20(t_s^o)^6} - \xi^4\frac{1}{12(t_s^o)^6}$$

$$- i\xi^3\frac{3}{8(t_s^o)^7} + \xi^2\frac{7}{8(t_s^o)^8} + i\xi\frac{7}{8(t_s^o)^9}\Bigg)\beta^5 + \cdots\Bigg\} \quad (15.36)$$

These results can be used to show that:

$$\frac{\exp(i\xi\tau_s)}{1-\alpha^2\tau_s} = \exp(i\xi t_s^\infty)\Big\{1 + i\xi\alpha + (t_s^\infty - \tfrac{1}{2}\xi^2)\alpha^2 + (1 + i\tfrac{4}{3}\xi t_s^\infty - \tfrac{i}{6}\xi^3)\alpha^3$$

$$+ \left(i\frac{5}{4}\xi + \frac{1}{24}\xi^4 - \frac{5}{6}\xi^2 t_s^\infty + (t_s^\infty)^2\right)\alpha^4$$

$$- \Big(\frac{3}{4}\xi^2 - \frac{1}{120}i\xi^5 - \frac{7}{3}t_s^\infty$$

$$+ i\frac{1}{3}\xi^3 t_s^\infty - i\frac{23}{15}\xi(t_s^\infty)^2\Big)\alpha^5 + \cdots\Big\} \qquad (15.37)$$

$$\frac{\exp(i\xi\tau_s)}{(1-\alpha^2\tau_s)\,w_1'(\tau_s)} = \frac{\exp(i\xi t_s^\infty)}{w_1'(t_s^\infty)}\Big\{1 + i\xi\alpha - \left(\frac{1}{2}\xi^2 - \frac{1}{2}t_s^\infty\right)\alpha^2$$

$$+ \left(\frac{2}{3} + i\frac{5}{6}\xi t_s^\infty - i\frac{1}{6}\xi^3\right)\alpha^3$$

$$+ \left(i\frac{11}{12}\xi + \frac{1}{24}\xi^4 + \frac{3}{8}(t_s^\infty)^2 - \frac{7}{12}\xi^2 t_s^\infty\right)\alpha^4$$

$$- \Big(\frac{7}{12}\xi^2 - i\frac{1}{120}\xi^5 - \frac{6}{5}t_s^\infty$$

$$+ i\frac{1}{4}\xi^3 t_s^\infty - i\frac{89}{120}\xi(t_s^\infty)^2\Big)\alpha^5 + \cdots\Big\} \qquad (15.38)$$

$$\frac{\exp(i\xi\tau_s)}{(1-\alpha^2\tau_s)\left[w_1'(\tau_s)\right]^2} = \frac{\exp(i\xi t_s^\infty)}{\left[w_1'(t_s^\infty)\right]^2}\Bigg\{1 + i\xi\alpha - \frac{1}{2}\xi^2\alpha^2 + \left(\frac{1}{3} + i\frac{1}{3}\xi t_s^\infty - i\frac{1}{6}\xi^3\right)\alpha^3$$

$$+\left(i\frac{7}{12}\xi + \frac{1}{24}\xi^4 - \frac{1}{3}\xi^2 t_s^\infty\right)\alpha^4$$

$$-\left(\frac{5}{12}\xi^2 - i\frac{1}{120}\xi^5 - \frac{2}{5}t_s^\infty + i\frac{1}{6}\xi^3 t_s^\infty - i\frac{1}{5}\xi(t_s^\infty)^2\right)\alpha^5 + \cdots\Bigg\} \qquad (15.39)$$

$$\frac{\exp(i\xi t_s)}{t_s-\beta^2} = \exp(i\xi t_s^o)\Bigg\{\frac{1}{t_s^o} + \left(i\frac{1}{(t_s^o)^2}\xi - \frac{1}{(t_s^o)^3}\right)\beta + \left(\frac{1}{(t_s^o)^2} - \frac{1}{2(t_s^o)^3}\xi^2 - i\frac{3}{2(t_s^o)^4}\xi + \frac{3}{2(t_s^o)^5}\right)\beta^2$$

$$+\left(i\frac{4}{3(t_s^o)^3}\xi - \frac{7}{3(t_s^o)^4} - i\frac{1}{6(t_s^o)^4}\xi^3 + \frac{1}{(t_s^o)^5}\xi^2 + i\frac{5}{2(t_s^o)^6}\xi - \frac{5}{2(t_s^o)^7}\right)\beta^3$$

$$+\left(\frac{1}{(t_s^o)^3} - \frac{5}{6(t_s^o)^4}\xi^2 - i\frac{15}{4(t_s^o)^5}\xi + \frac{1}{24(t_s^o)^5}\xi^4 + \frac{21}{4(t_s^o)^6} + i\frac{5}{12(t_s^o)^6}\xi^3\right.$$

$$\left.-\frac{15}{8(t_s^o)^7}\xi^2 - i\frac{35}{8(t_s^o)^8}\xi + \frac{35}{8(t_s^o)^9}\right)\beta^4 + \left(i\frac{23}{15(t_s^o)^4}\xi - \frac{58}{15(t_s^o)^5} - i\frac{1}{3(t_s^o)^5}\xi^3\right.$$

$$+\frac{11}{4(t_s^o)^6}\xi^2 + i\frac{1}{120(t_s^o)^6}\xi^5 + i\frac{181}{20(t_s^o)^7}\xi - \frac{1}{8(t_s^o)^7}\xi^4 - \frac{231}{20(t_s^o)^8}$$

$$\left.-i\frac{7}{8(t_s^o)^8}\xi^3 + \frac{7}{2(t_s^o)^9}\xi^2 + i\frac{63}{8(t_s^o)^{10}}\xi - \frac{63}{8(t_s^o)^{11}}\right)\beta^5 + \cdots\Bigg\} \qquad (15.40)$$

$$
\begin{aligned}
\frac{\exp(i\xi t_s)}{t_s - \beta^2}\frac{1}{w_1(t_s)} = \frac{\exp(i\xi t_s^o)}{w_1(t_s^o)}\Bigg\{ & \frac{1}{t_s^o} + \left(i\frac{1}{(t_s^o)^2}\xi - \frac{1}{(t_s^o)^3}\right)\beta \\
& + \left(\frac{1}{2(t_s^o)^2} - \frac{1}{2(t_s^o)^3}\xi^2 - i\frac{3}{2(t_s^o)^4}\xi + \frac{3}{2(t_s^o)^5}\right)\beta^2 \\
& + \left(i\frac{5}{6(t_s^o)^3}\xi - \frac{3}{2(t_s^o)^4} - i\frac{1}{6(t_s^o)^4}\xi^3 + \frac{1}{(t_s^o)^5}\xi^2 + i\frac{5}{2(t_s^o)^6}\xi - \frac{5}{2(t_s^o)^7}\right)\beta^3 \\
& + \left(\frac{3}{8(t_s^o)^3} - \frac{7}{12(t_s^o)^4}\xi^2 - i\frac{8}{3(t_s^o)^5}\xi + \frac{1}{24(t_s^o)^5}\xi^4 + \frac{91}{24(t_s^o)^6}\right. \\
& \qquad \left. + i\frac{5}{12(t_s^o)^6}\xi^3 - \frac{15}{8(t_s^o)^7}\xi^2 - i\frac{35}{8(t_s^o)^8}\xi + \frac{35}{8(t_s^o)^9}\right)\beta^4 \\
& + \left(i\frac{89}{120(t_s^o)^4}\xi - \frac{233}{120(t_s^o)^5} - i\frac{1}{4(t_s^o)^5}\xi^3 + \frac{25}{12(t_s^o)^6}\xi^2 + i\frac{1}{120(t_s^o)^6}\xi^5\right. \\
& \qquad + i\frac{277}{40(t_s^o)^7}\xi - \frac{1}{8(t_s^o)^7}\xi^4 - \frac{357}{40(t_s^o)^8} - i\frac{7}{8(t_s^o)^8}\xi^3 \\
& \qquad \left. + \frac{7}{2(t_s^o)^9}\xi^2 + i\frac{63}{8(t_s^o)^{10}}\xi - \frac{63}{8(t_s^o)^{11}}\right)\beta^5 + \cdots \Bigg\}
\end{aligned}
\tag{15.41}
$$

$$
\begin{aligned}
\frac{\exp(i\xi t_s)}{t_s-\beta^2}\frac{1}{\left[w_1(t_s)\right]^2} = \frac{\exp(i\xi t_s^o)}{\left[w_1(t_s^o)\right]^2}\Bigg\{ & \frac{1}{t_s^o} + \left(i\frac{1}{(t_s^o)^2}\xi - \frac{1}{(t_s^o)^3}\right)\beta + \left(-\frac{1}{2(t_s^o)^3}\xi^2 - i\frac{3}{2(t_s^o)^4}\xi + \frac{3}{2(t_s^o)^5}\right)\beta^2 \\
& + \left(i\frac{1}{3(t_s^o)^3}\xi - \frac{2}{3(t_s^o)^4} - i\frac{1}{6(t_s^o)^4}\xi^3 + \frac{1}{(t_s^o)^5}\xi^2 + i\frac{5}{2(t_s^o)^6}\xi - \frac{5}{2(t_s^o)^7}\right)\beta^3 \\
& + \left(-\frac{1}{3(t_s^o)^4}\xi^2 - i\frac{19}{12(t_s^o)^5}\xi + \frac{1}{24(t_s^o)^5}\xi^4 + \frac{7}{3(t_s^o)^6} + i\frac{5}{12(t_s^o)^6}\xi^3\right. \\
& \left. - \frac{15}{8(t_s^o)^7}\xi^2 - i\frac{35}{8(t_s^o)^8}\xi + \frac{35}{8(t_s^o)^9}\right)\beta^4 \\
& + \left(i\frac{1}{5(t_s^o)^4}\xi - \frac{3}{5(t_s^o)^5} - i\frac{1}{6(t_s^o)^5}\xi^3 + \frac{17}{12(t_s^o)^6}\xi^2 + i\frac{1}{120(t_s^o)^6}\xi^5\right. \\
& + i\frac{24}{5(t_s^o)^7}\xi - \frac{1}{8(t_s^o)^7}\xi^4 - \frac{63}{10(t_s^o)^8} - i\frac{7}{8(t_s^o)^8}\xi^3 \\
& \left. + \frac{7}{2(t_s^o)^9}\xi^2 + i\frac{63}{8(t_s^o)^{10}}\xi - \frac{63}{8(t_s^o)^{11}}\right)\beta^5 + \cdots \Bigg\}
\end{aligned}
\tag{15.42}
$$

15.1 THE INTEGRALS $J_n(\xi)$

We can now use these expansions to show that

$$J_o(\xi) = \sum_{s=1}^{\infty} \exp(i\xi t_s^\infty) = J^{(0)}(\xi)$$

$$J_1(\xi) = \sum_{s=1}^{\infty} (i\xi)\exp(i\xi t_s^\infty) = i\xi\, J^{(0)}(\xi)$$

$$J_2(\xi) = \sum_{s=1}^{\infty} \left[-\frac{1}{2}\xi^2 + t_s^\infty\right]\exp(i\xi t_s^\infty) = -\frac{\xi^2}{2}\, J^{(0)}(\xi) - i\, J^{(1)}(\xi)$$

$$J_3(\xi) = \sum_{s=1}^{\infty} \left\{1 - \frac{i}{6}\xi^3 + i\,\frac{4}{3}\,\xi\, t_s^{\infty}\right\} \exp(i\xi t_s^{\infty}) = \left(1 - \frac{i}{6}\xi^3\right) J^{(0)}(\xi) + \frac{4}{3}\,\xi\, J^{(1)}(\xi) \tag{15.43}$$

$$J_4(\xi) = \sum_{s=1}^{\infty} \left\{i\,\frac{5}{4}\,\xi + \frac{1}{24}\,\xi^4 - \frac{5}{6}\,\xi^2 t_s^{\infty} + (t_s^{\infty})^2\right\} \exp(i\xi t_s^{\infty})$$

$$= \left(i\,\frac{5}{4}\,\xi + \frac{1}{24}\,\xi^4\right) J^{(0)}(\xi) + i\,\frac{5}{6}\,\xi^2\, J^{(1)}(\xi) - J^{(2)}(\xi)$$

$$J_5(\xi) = \sum_{s=1}^{\infty} \left\{-\frac{3}{4}\,\xi^2 + \frac{i}{120}\,\xi^5 + \frac{7}{3}\,t_s^{\infty} - \frac{i}{3}\,\xi^3\, t_s^{\infty} + i\,\frac{23}{15}\,\xi\,(t_s^{\infty})^2\right\} \exp(i\xi t_s^{\infty})$$

$$= \left(-\frac{3}{4}\,\xi^2 + \frac{i}{120}\,\xi^5\right) J^{(0)}(\xi) - \left(i\,\frac{7}{3} + \frac{1}{3}\,\xi^3\right) J^{(1)}(\xi) - i\,\frac{23}{15}\,\xi\, J^{(2)}(\xi)$$

In general, we have

$$J_n(\xi) = \frac{i\xi}{n}\, J_{n-1}(\xi) - i\,\frac{dJ_{n-2}(\xi)}{d\xi}. \tag{15.44}$$

We observe that

$$J^{(n)}(\xi) = \frac{d^n}{d\xi^n}\, J(\xi)$$

where

$$J(\xi) = J^{(0)}(\xi) = J_0(\xi) = \sum_{s=1}^{\infty} \exp(i\xi t_s^{0}) = \sum_{s=1}^{\infty} \exp\left(\frac{-\sqrt{3}+i}{2}\,\alpha_s\,\xi\right)$$

where α_s denotes the roots of the Airy function

$$Ai(-\alpha_s) = 0.$$

We can also write

$$J(\xi) = \frac{1}{2\pi i}\int_{c-i\infty}^{c+i\infty} \exp(x\,\alpha)\,\frac{Ai'(\alpha)}{Ai(\alpha)}\,d\alpha\,, \quad x = \frac{\sqrt{3}-i}{2}\,\xi \doteq \exp\left(-\,i\,\frac{\pi}{6}\right)\xi$$

$$= -\sum_{n=o}^{\infty} A_n\,\frac{x^{\frac{3n-3}{2}}}{\Gamma\left(\frac{3n-1}{2}\right)} = \frac{\exp\left(i\,\frac{\pi}{4}\right)}{2\sqrt{\pi}\,\xi^{3/2}}\left\{1 + \frac{1}{4}\,\frac{\Gamma\left(-\frac{1}{2}\right)}{\Gamma(2)}\exp\left(-i\,\frac{\pi}{4}\right)\xi^{3/2}\right.$$

$$\left. - \frac{5}{32}\,\frac{\Gamma\left(-\frac{1}{2}\right)}{\Gamma\left(\frac{5}{2}\right)}\,\exp\left(-\,i\,\frac{\pi}{2}\right)\xi^{3} + \cdots\right\}$$

where A_n denotes the coefficient of $\alpha^{(-3n+1/2)}$ in the asymptotic expansion of the logarithmic derivative of the Airy function

$$\frac{Ai'(\alpha)}{Ai(\alpha)} = \sum_{n=o}^{\infty} A_n\,\alpha^{(3n-1/2)} = -\sqrt{\alpha} - \frac{1}{4}\,\frac{1}{\alpha} + \frac{5}{32}\,\frac{1}{\alpha^{5/2}} - \frac{15}{64}\,\frac{1}{\alpha^{4}} + \frac{1105}{2048}\,\frac{1}{\alpha^{11/2}} - \frac{1695}{1024}\,\frac{1}{\alpha^{7}}$$

$$+ \frac{414125}{65536}\,\frac{1}{\alpha^{17/2}} - \frac{59025}{2048}\,\frac{1}{\alpha^{10}} + \frac{12820\;31525}{8388608}\,\frac{1}{\alpha^{21/2}}$$

$$- \frac{2421\;83775}{262144}\,\frac{1}{\alpha^{13}} + \cdots$$

15.2 THE INTEGRALS $K_n(\xi)$

We can also show that

$$K_o(\xi) = \sum_{s-1}^{\infty} \frac{\exp(i\xi t_s^o)}{t_s^o} = K^{(0)}(\xi)$$

$$K_1(\xi) = \sum_{s=1}^{\infty}\left\{-\frac{1}{(t_s^o)^2} + \frac{i}{t_s^o}\,\xi\right\}\frac{\exp(i\xi t_s^o)}{t_s^o} = K^{(-2)}(\xi) - \xi\,K^{(-1)}(\xi)$$

$$K_2(\xi) = \sum_{s=1}^{\infty}\left\{\frac{3}{2(t_s^o)^4} - i\frac{3}{2(t_s^o)^3}\xi - \frac{1}{2(t_s^o)^2}\xi^2 + \frac{1}{t_s^o}\right\}\frac{\exp(i\xi t_s^o)}{t_s^o}$$

$$= \frac{3}{2}K^{(-4)}(\xi) - \frac{3}{2}\xi K^{(-3)}(\xi) + \frac{1}{2}\xi^2 K^{(-2)}(\xi) + i K^{(-1)}(\xi)$$

(15.45)

$$K_3(\xi) = \sum_{s=1}^{\infty}\left\{-\frac{5}{2(t_s^o)^6} + i\frac{5}{2(t_s^o)^5}\xi + \frac{1}{(t_s^o)^4}\xi^2 - i\frac{1}{6(t_s^o)^3}\xi^3 - \frac{7}{3(t_s^o)^3} + i\frac{4}{3(t_s^o)^2}\xi\right\}$$

$$= \frac{5}{2}K^{(-6)}(\xi) - \frac{5}{2}\xi K^{(-5)}(\xi) + \xi^2 K^{(-4)}(\xi) - \frac{1}{6}\xi^3 K^{(-3)}(\xi) + i\frac{7}{3}K^{(-3)}(\xi) - i\frac{4}{3}\xi K^{(-2)}(\xi)$$

$$K_4(\xi) = \sum_{s=1}^{\infty}\left\{\frac{35}{8(t_s^o)^8} - i\frac{35}{8(t_s^o)^7}\xi - \frac{15}{8(t_s^o)^6}\xi^2 + i\frac{5}{12(t_s^o)^5}\xi^3 + \frac{21}{4(t_s^o)^5} + \frac{1}{24(t_s^o)^4}\xi^4 - i\frac{15}{4(t_s^o)^4}\xi - \frac{5}{6(t_s^o)^3}\xi^2\right.$$

$$\left. + \frac{1}{(t_s^o)^2}\right\}\frac{\exp(i\xi t_s^o)}{t_s^o} = \frac{35}{8}K^{(-8)}(\xi) - \frac{35}{8}\xi K^{(-7)}(\xi) + \frac{15}{8}\xi^2 K^{(-6)}(\xi) - \frac{5}{12}\xi^3 K^{(-5)}(\xi)$$

$$+ i\frac{21}{4}K^{(-5)}(\xi) + \frac{1}{24}\xi^4 K^{(-4)}(\xi) - i\frac{15}{4}\xi K^{(-4)}(\xi)$$

$$+ i\frac{5}{6}\xi^2 K^{(-3)}(\xi) - K^{(-2)}(\xi)$$

$$K_5(\xi) = \sum_{s=1}^{\infty}\left\{-\frac{63}{8(t_s^o)^{10}} + i\frac{63}{8(t_s^o)^9}\xi + \frac{7}{2(t_s^o)^8}\xi^2 - i\frac{7}{8(t_s^o)^7}\xi^3 - \frac{233}{20(t_s^o)^7} - \frac{1}{8(t_s^o)^6}\xi^4 + i\frac{181}{20(t_s^o)^6}\xi\right.$$

$$\left. + i\frac{1}{120(t_s^o)^5}\xi^5 + \frac{11}{4(t_s^o)^5}\xi^2 - i\frac{1}{3(t_s^o)^4}\xi^3 - \frac{58}{15(t_s^o)^4} + i\frac{23}{15(t_s^o)^3}\xi\right\}\frac{\exp(i\xi t_s^o)}{t_s^o} = \frac{63}{8}K^{(-10)}(\xi)$$

$$- \frac{63}{8}\xi K^{(-9)}(\xi) + \frac{7}{2}\xi^2 K^{(-8)}(\xi) - \frac{7}{8}\xi^3 K^{(-7)}(\xi) + i\frac{231}{20}K^{(-7)}(\xi) + \frac{1}{8}\xi^4 K^{(-6)}(\xi)$$

$$- i\frac{181}{20}\xi K^{(-6)}(\xi) - \frac{1}{120}\xi^5 K^{(-5)}(\xi) + i\frac{11}{4}\xi^2 K^{(-5)}(\xi) - \frac{i}{3}\xi^3 K^{(-4)}(\xi) - \frac{58}{15}K^{(-4)}(\xi)$$

$$+ \frac{23}{15}\xi K^{(-3)}(\xi)$$

We can show that

$$\frac{dK_n(\xi)}{d\xi} = -\frac{\xi}{n} K_{n-1}(\xi) + i K_{n-2}(\xi) . \tag{15.46}$$

We observe that

$$K^{(n)}(\xi) = \frac{d^n}{d\xi^n} K(\xi)$$

where

$$K(\xi) = K^{(0)}(\xi) = K_o(\xi) = \sum_{s=1}^{\infty} \frac{\exp(i\xi t_s^o)}{t_s^o} = \exp(-i\frac{\pi}{3}) \sum_{s=1}^{\infty} \frac{1}{\beta_s} \exp\left(\frac{-\sqrt{3}+i}{2}\right)\beta_s \xi$$

where β_s denotes the roots of the derivative of the Airy function

$$Ai'(-\beta_s) = 0.$$

We can also write

$$K(\xi) = \frac{\exp\left(i\frac{\pi}{6}\right)}{2\pi} \int_{c-i\infty}^{c+i\infty} \exp(x\alpha) \frac{Ai(\alpha)}{Ai'(\alpha)} d\alpha , \quad x = \frac{\sqrt{3}-i}{2}\xi = \exp\left(-i\frac{\pi}{6}\right)\xi$$

$$= \frac{\exp\left(-i\frac{\pi}{4}\right)}{\sqrt{\pi}\,\xi} \left\{1 - \frac{1}{4} \frac{\Gamma\left(\frac{1}{2}\right)}{\Gamma(2)} \exp\left(-i\frac{\pi}{4}\right)\xi^{3/2} + \frac{7}{32} \frac{\Gamma\left(\frac{1}{2}\right)}{\Gamma\left(\frac{7}{2}\right)} \exp\left(-i\frac{\pi}{2}\right)\xi^3 + \cdots\right\}$$

$$= -\exp\left(-i\frac{\pi}{3}\right) \sum_{n=o}^{\infty} B_n \frac{x^{(3n-1)/2}}{\Gamma\left(\frac{3n+1}{2}\right)}$$

where B_n denotes the coefficient of $\alpha^{(-3n+1/2)}$ in the asymptotic expansion of the logarithmic derivative of the Airy function

$$\frac{d}{d\alpha}\log Ai'(\alpha) = \frac{Ai''(\alpha)}{Ai'(\alpha)} = \alpha\frac{Ai(\alpha)}{Ai'(\alpha)} = \sum_{n=o}^{\infty} B_n \frac{1}{\alpha^{\frac{3n-1}{2}}}$$

$$= -\sqrt{\alpha} + \frac{1}{4}\frac{1}{\alpha} - \frac{7}{32}\frac{1}{\alpha^{5/2}} + \frac{21}{64}\frac{1}{\alpha^4} - \frac{1463}{2048}\frac{1}{\alpha^{11/2}}$$

$$+ \frac{2121}{1024}\frac{1}{\alpha^7} - \frac{495271}{65536}\frac{1}{\alpha^{17/2}} + \frac{136479}{4096}\frac{1}{\alpha^{10}}$$

$$- \frac{14457\ 13003}{8388608}\frac{1}{\alpha^{23/2}} + \frac{268122561}{262144}\frac{1}{\alpha^{13}} - \cdots$$

For $n < 0$, the functions $K^{(n)}(\xi)$ must be written in the form

$$K^{(n)}(\xi) = K^{(n)}(0) + K^{(n+1)}(0)\,x + K^{(n+2)}(0)\frac{x^2}{2!} + \cdots$$

$$+ K^{(-2)}(0)\frac{x^{-n-2}}{(-n-2)!} + K^{(-1)}(0)\frac{x^{-n-1}}{(-n-1)!} - \exp\left(-i\frac{\pi}{3}\right)\sum_{m=o}^{\infty} B_m \frac{x^{(3m-2n-1)/2}}{\Gamma\left(\frac{3m-2n+1}{2}\right)} \tag{15.47}$$

where

$$K^{(n)}(0) = \exp\left(i\frac{5n-2}{6}\pi\right)\sum_{s=1}^{\infty}\frac{1}{\beta_s^{-n+1}} \tag{15.48}$$

The infinite series

$$S_n = \sum_{s=1}^{\infty}\frac{1}{\beta_s^{-n+1}} \tag{15.49}$$

can be summed exactly by using the generating function

$$\frac{Ai(\alpha)}{Ai'(\alpha)} = -\sum_{s=1}^{\infty} \frac{1}{(\alpha+\beta_s)} \frac{1}{\beta_s} = -S_{-1} + \alpha S_{-2} - \alpha^2 S_{-3} + \alpha^3 S_{-4} + \cdots$$

$$= -S + \alpha - S\frac{\alpha^2}{2!} + 4S\frac{\alpha^3}{3!} - (6 + 6S^3)\frac{\alpha^4}{4!} + \cdots \qquad (15.50)$$

where

$$S = -\frac{Ai(0)}{Ai'(0)} = 1.371721164.$$

In the applications it has been convenient to define and tabulate the functions

$$u^{(n)}(\xi) = 2\sqrt{\pi}\,\exp\left(-i\frac{\pi}{4}\right)\xi^{3/2}\,J^{(n)}(\xi)$$

$$v^{(n)}(\xi) = \sqrt{\pi}\,\exp\left(i\frac{\pi}{4}\right)\xi^{1/2}\,K^{(n)}(\xi) \qquad (15.51)$$

We observe that

$$u^{(n)}(\xi) \neq \frac{d^n}{d\xi^n} u^{(0)}(\xi)$$

$$v^{(n)}(\xi) \neq \frac{d^n}{d\xi^n} v^{(0)}(\xi)$$

since

$$u^{(n)}(\xi) = \xi^{3/2}\frac{d^n}{d\xi^n}\left\{\xi^{-3/2}\,u^{(0)}(\xi)\right\}$$

$$v^{(n)}(\xi) = \xi^{1/2}\frac{d^n}{d\xi^n}\left\{\xi^{-1/2}\,v^{(0)}(\xi)\right\}.$$

15.3 THE INTEGRALS $f_n(\xi)$

The functions $f_n(\xi)$ have the properties

$$f_o(\xi) = 2\sqrt{\pi}\, i \sum_{s=1}^{\infty} \frac{\exp(i\xi t_s^{\infty})}{w_1'(t_s^{\infty})} = f^{(0)}(\xi) = f(\xi)$$

$$f_1(\xi) = 2\pi i \sum_{s=1}^{\infty} (i\xi) \frac{\exp(i\xi t_s^{\infty})}{w_1'(t_s^{\infty})} = i\xi\, f^{(0)}(\xi) = i\xi\, f(\xi)$$

$$f_2(\xi) = 2\pi i \sum_{s=1}^{\infty} \left\{-\frac{1}{2}\xi^2 + \frac{1}{2} t_s^{\infty}\right\} \frac{\exp(i\xi t_s^{\infty})}{w_1'(t_s^{\infty})} = -\frac{1}{2}\xi^2 f^{(0)}(\xi) - \frac{i}{2} f^{(1)}(\xi)$$

$$f_3(\xi) = 2\pi i \sum_{s=1}^{\infty} \left\{\frac{2}{3} + i\frac{5}{6}\xi t_s^{\infty} - i\frac{1}{6}\xi^3\right\} \frac{\exp(i\xi t_s^{\infty})}{w_1'(t_s^{\infty})} = \left\{\frac{2}{3} - \frac{i}{6}\xi^3\right\} f^{(0)}(\xi) + \frac{5}{6}\xi f^{(1)}(\xi)$$

$$f_4(\xi) = 2\pi i \sum_{s=1}^{\infty} \left\{i\frac{11}{12}\xi + \frac{1}{24}\xi^4 + \frac{3}{8}(t_s^{\infty})^2 - \frac{7}{12}\xi^2 t_s^{\infty}\right\} \frac{\exp(i\xi t_s^{\infty})}{w_1'(t_s^{\infty})} = \left\{i\frac{11}{12}\xi + \frac{1}{24}\xi^4\right\} f^{(0)}(\xi)$$

$$+ i\frac{7}{12}\xi^2 f^{(1)}(\xi) - \frac{3}{8} f^{(2)}(\xi)$$

$$f_5(\xi) = 2\pi i \sum_{s=1}^{\infty} \left\{-\frac{7}{12}\xi^2 + i\frac{1}{120}\xi^5 + \frac{6}{5} t_s^{\infty} - i\frac{1}{4}\xi^3 t_s^{\infty} + i\frac{89}{120}\xi (t_s^{\infty})^2\right\} \frac{\exp(i\xi t_s^{\infty})}{w_1'(t_s^{\infty})}$$

$$= \left\{-\frac{7}{12}\xi^2 + \frac{i}{120}\xi^5\right\} f^{(0)}(\xi) - \left\{i\frac{6}{5} + \frac{1}{4}\xi^3\right\} f^{(1)}(\xi) - i\frac{89}{120}\xi f^{(2)}(\xi) \qquad (15.52)$$

We observe that

$$f_n(\xi) = \frac{i\xi}{n} f_{n-1}(\xi) - i\frac{n-1}{n}\frac{d f_{n-2}(\xi)}{d\xi} .$$

Also we define

$$f^{(n)}(\xi) = \frac{d^n}{d\xi^n} f(\xi)$$

where

$$f(\xi) = f_o(\xi) = f^{(0)}(\xi) = 2\sqrt{\pi}\, i \sum_{s=1}^{\infty} \frac{\exp(i\xi t_s^{\infty})}{w_1'(t_s^{\infty})}$$

$$= \exp\left(-i\frac{\pi}{3}\right) \sum_{s=1}^{\infty} \frac{\exp\left(-\frac{\sqrt{3}-i}{2}\alpha_s \xi\right)}{Ai'(-\alpha_s)}$$

$$= -\frac{\exp\left(i\frac{\pi}{6}\right)}{2\pi} \int_{c-i\infty}^{c+i\infty} \frac{\exp\left(\frac{\sqrt{3}-i}{2} p\xi\right)}{Ai(p)}\, dp$$

$$= \frac{1}{\sqrt{\pi}} \int_{-\infty}^{\infty} \frac{\exp(i\xi t)}{w_1(t)} dt$$

$$= \frac{1}{\pi} \int_{-\infty}^{\infty} \frac{\exp(i\xi t)}{Bi(t) + i\,Ai(t)}\, dt$$

$$= -\frac{\exp\left(-i\frac{2\pi}{3}\right)}{\pi} \int_{0}^{\infty} \frac{\exp\left(-\frac{\sqrt{3}+i}{2}\xi t\right)}{Bi(t) - i\,Ai(t)}\, dt + \frac{1}{\pi} \int_{0}^{\infty} \frac{\exp(i\xi t)}{Bi(t) + i\,Ai(t)}\, dt$$

We can show that $f(\xi)$ is an entire function of ξ which can be represented in the form

$$f(\xi) = \sum_{n=o}^{\infty} f^{(n)}(0) \frac{\xi^n}{n!} = \sum_{n=o}^{\infty} (\gamma_n + i\delta_n) \frac{\xi^n}{n!}$$

where $f^{(n)}(0)$ can be evaluated by summing the divergent series

$$f^{(n)}(0) = \exp\left(i\,5n\,\frac{\pi}{6} - i\frac{\pi}{3}\right) \sum_{s=1}^{\infty} \frac{\alpha_s^n}{Ai'(-\alpha_s)}$$

by means of the Euler summation scheme

$$\sum_{s=1}^{\infty} f(s) = \sum_{s=1}^{\infty} f(s) + \frac{1}{2} f(N) - \frac{1}{2}\Delta f(N) + \frac{1}{4}\Delta^2 f(N) - \frac{1}{8}\Delta^3 f(N) + \cdots$$

where

$$\Delta f(N) = f(N+1) - f(N)$$

$$\Delta^{n+1} f(N) = \Delta^n f(N+1) - \Delta^n f(N)$$

We can also write

$$\gamma_n = \frac{1}{\pi}\left\{\left[\cos\frac{5n+4}{6}\pi + \cos\frac{n\pi}{2}\right] I_1(n) + \left[\sin\frac{5n+4}{6}\pi + \sin\frac{n\pi}{2}\right] I_2(n)\right\}$$

$$\delta_n = \frac{1}{\pi}\left\{\left[-\sin\frac{5n+4}{6}\pi + \sin\frac{n\pi}{2}\right] I_1(n) + \left[\cos\frac{5n+4}{6}\pi - \cos\frac{n\pi}{2}\right] I_2(n)\right\}$$

where the integrals

$$I_2(n) = \int_0^{\infty} \frac{t^n\, Ai(t)}{Bi^2(t) + Ai^2(t)}\, dt$$

$$I_1(n) = \int_0^{\infty} \frac{t^n\, Bi(t)}{Bi^2(t) + Ai^2(t)}\, dt$$

can be evaluated numerically.

For large negative values of ξ we can show that $f(\xi)$ has an asymptotic expansion of the form

$$f(\xi) \underset{\xi \to -\infty}{\sim} 2i\xi \exp\left(-i\frac{\xi^3}{3}\right)\left\{1 - \frac{1}{4\xi^3} + \frac{1}{2\xi^6} + i\frac{175}{64}\frac{1}{\xi^9} - \frac{395}{16}\frac{1}{\xi^{12}} - i\frac{318175}{1024}\frac{1}{\xi^{15}}\right.$$

$$+ \frac{641305}{128}\frac{1}{\xi^{18}} + i\frac{2015\ 50385}{2048}\frac{1}{\xi^{21}} - \frac{23321\ 26775}{1024}\frac{1}{\xi^{24}}$$

$$\left. - i\frac{1589\ 56578\ 25375}{262144}\frac{1}{\xi^{27}} + \frac{23917\ 93186\ 85125}{131072}\frac{1}{\xi^{30}} + \cdots\right\}$$

We have also show that $f^{(n)}(\xi)$ has an asymptotic expansion of the form

$$f^{(n)}(\xi) \sim (-i\xi^2)^n (2i\xi) \exp\left(-i\frac{\xi^3}{3}\right)\left\{1 - i\frac{A_1^{(n)}}{\xi^3} + \frac{A_2^{(n)}}{\xi^6} + i\frac{A_3^{(n)}}{\xi^9} - \frac{A_4^{(n)}}{\xi^{12}} + \cdots\right\} \quad (15.53)$$

where

$$A_1^{(n+1)} = A_1^{(n)} - (2n + 1)$$

$$A_m^{(n+1)} = A_m^{(n)} + (2n + 1 - 3m + 3)\, A_{m-1}^{(n)}, \quad m > 1 \quad (15.54)$$

In Table 28 we give values of $A_m^{(n)}$.

For negative values of n (the integrals of $f(\xi)$) we must add to the asymptotic expansion the contour integral

$$\tilde{f}^{(n)}(\xi) = -\frac{1}{\sqrt{\pi}} \int_c \frac{(it)^n \exp(i\xi t)}{w_1(t)}\, dt \quad (15.55)$$

where c is a contour which encircles the origin in a counterclockwise direction.

Table 28

TABLE OF COEFFICIENTS $A_m^{(n)}$ FOR ASYMPTOTIC EXPANSION OF

$$f^{(n)}(\xi) = (-i\xi^2)^n (2i\xi) \exp(-i\xi^3/3) \left\{ 1 - i\frac{A_1^{(n)}}{\xi^3} + \frac{A_2^{(n)}}{\xi^6} + i\frac{A_3^{(n)}}{\xi^9} - \frac{A_4^{(n)}}{\xi^{12}} + \dots \right\}$$

m \ n	-2	-1	0	1
1	$-\frac{15}{4}$	$-\frac{3}{4}$	$\frac{1}{4}$	$-\frac{3}{4}$
2	$-\frac{50}{2}$	$-\frac{5}{2}$	$\frac{1}{2}$	0
3	$-\frac{15345}{64}$	$-\frac{945}{64}$	$\frac{175}{64}$	$\frac{15}{64}$
4	$-\frac{192010}{64}$	$-\frac{7870}{64}$	$\frac{395}{16}$	$\frac{45}{16}$
5	$-\frac{47401185}{1024}$	$\frac{1318785}{1024}$	$\frac{318175}{1024}$	$\frac{40095}{1024}$
6	$-\frac{869191450}{1024}$	$-\frac{15970120}{1024}$	$\frac{641305}{128}$	$\frac{675990}{1024}$
7	$-\frac{36911355075}{2048}$	$-\frac{405314175}{2048}$	$\frac{201550385}{2048}$	$\frac{27115425}{2048}$

m \ n	2	3	4	5
1	$-\frac{15}{4}$	$-\frac{35}{4}$	$-\frac{63}{4}$	$-\frac{99}{4}$
2	0	$-\frac{15}{2}$	$-\frac{85}{2}$	-137
3	$\frac{15}{64}$	$\frac{15}{64}$	$-\frac{465}{64}$	$-\frac{8625}{64}$
4	$\frac{45}{32}$	$\frac{15}{32}$	0	0
5	$\frac{14175}{1024}$	$\frac{4095}{1024}$	$\frac{1695}{1024}$	$\frac{1695}{1024}$
6	$\frac{194850}{1024}$	$\frac{53100}{1024}$	$\frac{20340}{1024}$	$\frac{10170}{1024}$
7	$\frac{6835725}{2048}$	$\frac{1769625}{2048}$	$\frac{601425}{2048}$	$\frac{235305}{2048}$

If we observe that

$$\frac{\exp(i\xi t)}{w_1(t)} = \frac{1 + i\xi t - \frac{\xi^2 t^2}{2} - i\frac{\xi^3 t^3}{6} + \cdots}{w_1(0)\left\{1 + \frac{1}{3!}t^3 + \frac{1\cdot 4}{6!}t^6 + \cdots\right\} + w_1'(0)\left\{t + \frac{2}{4!}t^4 + \frac{2\cdot 5}{7!}t^7 + \cdots\right\}}$$

$$= \frac{1}{w_1(0)} + \left(\frac{i\xi}{w_1(0)} - \frac{w_1'(0)}{\left[w_1(0)\right]^2}\right)t + \cdots$$

we find that

$$\tilde{f}^{(-1)}(\xi) = -2\sqrt{\pi}\,\frac{1}{w_1(0)} = -3^{2/3}\,\Gamma\left(\frac{2}{3}\right)\exp\left(-i\frac{\pi}{6}\right) = -2.816678828\,\exp\left(-i\frac{\pi}{6}\right)$$

$$\tilde{f}^{(-2)}(\xi) = 2\sqrt{\pi}\,i\left(\frac{i\xi}{w_1(0)} - \frac{w_1'(0)}{\left[w_1(0)\right]^2}\right)$$

$$= \left[-2.816678828\,\exp\left(-i\frac{\pi}{6}\right)\right]\xi - 2.0533902$$

We have also shown that the coefficients γ_n and δ_n of Table 24 can be used to evaluate $f_n(\xi)$. Thus,

$$f_0(\xi) = \sum_{s=0}^{\infty}\left(C_s^0 + iD_s^0\right)\frac{\xi^s}{s!}$$

$$C_s^0 = \gamma_s$$

$$D_s^0 = \delta_s \qquad (15.56)\ \text{Cont.}$$

$$f_1(\xi) = \sum_{s=0}^{\infty} \left(C_s^1 + i D_s^1\right) \frac{\xi^s}{s!}$$

$$C_s^1 = -s\,\delta_{s-1}$$

$$D_s^1 = s\,\gamma_{s-1}$$

$$f_2(\xi) = \sum_{s=0}^{\infty} \left(C_s^2 + i D_s^2\right) \frac{\xi^s}{s!}$$

$$C_s^2 = -\frac{1}{2}\left\{s(s-1)\gamma_{s-2} - \delta_{s+1}\right\}$$

$$D_s^2 = -\frac{1}{2}\left\{s(s-1)\,\delta_{s-2} + \gamma_{s+1}\right\}$$

$$f_3(\xi) = \sum_{s=0}^{\infty} \left(C_s^3 + i D_s^3\right) \frac{\xi^s}{s!}$$

$$C_s^3 = \frac{1}{6}\left\{s(s-1)(s-2)\,\delta_{s-3} + (5_s + 4)\,\gamma_s\right\}$$

$$D_s^3 = -\frac{1}{6}\left\{s(s-1)(s-2)\,\gamma_{s-3} - (5s+4)\,\delta_s\right\}$$

$$f_4(\xi) = \sum_{s=0}^{\infty} \left(C_s^4 + i D_s^4\right) \frac{\xi^s}{s!}$$

$$C_s^4 = \frac{1}{24}s(s-1)(s-2)(s-3)\,\gamma_{s-4} - s\,\frac{7s+4}{12}\,\delta_{s-1} - \frac{3}{8}\,\gamma_{s+2}$$

$$D_s^4 = \frac{1}{24}s(s-1)(s-2)(s-3)\,\delta_{s-4} + s\,\frac{7s+4}{12}\,\gamma_{s-1} - \frac{3}{8}\delta_{s+2} \qquad (15.56)$$

Cont.

$$f_5(\xi) = \sum_{s=o}^{\infty} \left(C_s^5 + i D_s^5\right) \frac{\xi^s}{s!}$$

$$C_s^5 = -\frac{1}{120} s(s-1)(s-2)(s-3)(s-4)\,\delta_{s-5} - \frac{1}{12} s(s-1)(3s+1)\,\gamma_{s-2} + \frac{1}{120}(144 + 89s)\,\delta_{s+1}$$

$$D_s^5 = \frac{1}{120} s(s-1)(s-2)(s-3)(s-4)\,\gamma_{s-5} - \frac{1}{12} s(s-1)(3s+1)\,\delta_{s-2} - \frac{1}{120}(144 + 89s)\,\gamma_{s+1}$$

(15.56)

15.4 THE INTEGRALS $g_n(\xi)$

The functions $g_n(\xi)$ have the property that

$$g_o(\xi) = 2\sqrt{\pi}\, i \sum_{s=1}^{\infty} \frac{\exp(i\xi t_s^o)}{t_s^o\, w_1(t_s^o)} = g^{(0)}(\xi) = g(\xi)$$

$$g_1(\xi) = 2\sqrt{\pi}\, i \sum_{s=1}^{\infty} \left(i \frac{1}{t_s^o}\xi - \frac{1}{(t_s^o)^2}\right) \frac{\exp(i\xi t_s^o)}{t_s^o\, w_1(t_s^o)} = g^{(-2)}(\xi) - \xi\, g^{(-1)}(\xi)$$

$$g_2(\xi) = 2\sqrt{\pi}\, i \sum_{s=1}^{\infty} \left(\frac{1}{2t_s^o} - \frac{1}{2(t_s^o)^2}\xi^2 - i\frac{3}{2(t_s^o)^3}\xi + \frac{3}{2(t_s^o)^4}\right) \frac{\exp(i\xi t_s^o)}{t_s^o\, w_1(t_s^o)}$$

$$= \frac{3}{2} g^{(-4)}(\xi) - \frac{3}{2}\xi\, g^{(-3)}(\xi) + \frac{1}{2}\xi^2 g^{(-2)}(\xi) + i\frac{1}{2} g^{(-1)}(\xi)$$

(15.57)
Cont.

$$g_3(\xi) = 2\sqrt{\pi}\, i \sum_{s=1}^{\infty} \left(i\frac{5}{6(t_s^o)^2}\xi - \frac{3}{2(t_s^o)^3} - i\frac{1}{6(t_s^o)^3}\xi^3 + \frac{1}{(t_s^o)^4}\xi^2 + i\frac{5}{2(t_s^o)^5}\xi - \frac{5}{2(t_s^o)^6} \right) \frac{\exp(i\xi t_s^o)}{t_s^o w_1(t_s^o)}$$

$$= \frac{5}{2} g^{(-6)}(\xi) - \frac{5}{2}\xi\, g^{(-5)}(\xi) + \xi^2 g^{(-4)}(\xi) + \left| i\frac{3}{2} - \frac{1}{6}\xi^3 \right| g^{(-3)}(\xi) - i\frac{5}{6}\xi\, g^{(-2)}(\xi)$$

$$g_4(\xi) = 2\sqrt{\pi}\, i \sum_{s=1}^{\infty} \left(\frac{3}{8(t_s^o)^2} - \frac{7}{12(t_s^o)^3}\xi^2 - i\frac{8}{3(t_s^o)^4}\xi + \frac{1}{24(t_s^o)^4}\xi^4 + \frac{91}{24(t_s^o)^5} + i\frac{5}{12(t_s^o)^5}\xi^3 \right.$$

$$\left. - \frac{15}{8(t_s^o)^6}\xi^2 - i\frac{35}{8(t_s^o)^7}\xi + \frac{35}{8(t_s^o)^8} \right) \frac{\exp(i\xi t_s^o)}{t_s^o w_1(t_s^o)}$$

$$= \frac{35}{8} g^{(-8)}(\xi) - \frac{35}{8}\xi\, g^{(-7)}(\xi) + \frac{15}{8}\xi^2 g^{(-6)}(\xi) + \left| i\frac{91}{24} - \frac{5}{12}\xi^3 \right| g^{(-5)}(\xi) - \left| i\frac{8}{3}\xi - \frac{1}{24}\xi^4 \right| g^{(-4)}(\xi)$$

$$+ i\frac{7}{12}\xi^2 g^{(-3)}(\xi) - \frac{3}{8} g^{(-2)}(\xi)$$

$$g_5(\xi) = 2\sqrt{\pi}\, i \sum_{s=1}^{\infty} \left(i\frac{89}{120(t_s^o)^3}\xi - \frac{233}{120(t_s^o)^4} - i\frac{1}{4(t_s^o)^4}\xi^3 + \frac{25}{12(t_s^o)^5}\xi^2 + i\cdot\frac{1}{120(t_s^o)^5}\xi^5 + i\frac{277}{40(t_s^o)^6}\xi \right.$$

$$\left. - \frac{1}{8(t_s^o)^6}\xi^4 - \frac{357}{40(t_s^o)^7} - i\frac{7}{8(t_s^o)^7}\xi^3 + \frac{7}{2(t_s^o)^8}\xi^2 + i\frac{63}{8(t_s^o)^9}\xi - \frac{63}{8(t_s^o)^{10}} \right) \frac{\exp(i\xi t_s^o)}{t_s^o w_1(t_s^o)}$$

$$= \frac{63}{8} g^{(-10)}(\xi) - \frac{63}{8}\xi\, g^{(-9)}(\xi) + \frac{7}{2}\xi^2 g^{(-8)}(\xi) + \left| i\frac{357}{40} - \frac{7}{8}\xi^3 \right| g^{(-7)}(\xi) - \left| i\frac{277}{40}\xi - \frac{1}{8}\xi^4 \right| g^{(-6)}(\xi)$$

$$+ \left| i\frac{25}{12}\xi^2 - \frac{1}{120}\xi^5 \right| g^{(-5)}(\xi) - \left| \frac{233}{120} + i\frac{1}{4}\xi^3 \right| g^{(-4)}(\xi)$$

$$+ \frac{89}{120}\xi\, g^{(-3)}(\xi) \tag{15.57}$$

In general we have

$$\frac{d\, g_n(\xi)}{d\xi} = -\frac{\xi}{n} g_{n-1}(\xi) + i\frac{n-1}{n} g_{n-2}(\xi) \tag{15.58}$$

The functions $g^{(n)}(\xi)$ are defined by

$$g^{(n)}(\xi) = \frac{d^n}{d\xi^n} g(\xi)$$

where

$$g(\xi) = g_o(\xi) = g^{(o)}(\xi) = 2\sqrt{\pi}\, i \sum_{s=1}^{\infty} \frac{\exp(i\xi t_s^o)}{t_s^o\, w_1(t_s^o)}$$

$$= \sum_{s=1}^{\infty} \frac{\exp\left(-\frac{\sqrt{3}-i}{2}\beta_s \xi\right)}{\beta_s\, Ai(-\beta_s)}$$

$$= -\frac{1}{2\pi i} \int_{c-i\infty}^{c+i\infty} \frac{\exp\left(\frac{\sqrt{3}-i}{2} p\xi\right)}{Ai'(p)}\, dp$$

$$= \frac{1}{\sqrt{\pi}} \int_{-\infty}^{\infty} \frac{\exp(i\xi t)}{w_1'(t)}\, dt$$

$$= \frac{1}{\pi} \int_{-\infty}^{\infty} \frac{\exp(i\xi t)}{Bi'(t) + i\, Ai'(t)}\, dt$$

$$= \frac{1}{\pi} \int_{o}^{\infty} \frac{\exp\left(-\frac{\sqrt{3}+i}{2}\xi t\right)}{Bi'(t) - i\, Ai'(t)}\, dt + \frac{1}{\pi} \int_{o}^{\infty} \frac{\exp(i\xi t)}{Bi'(t) + i\, Ai'(t)}\, dt$$

we can show that $g(\xi)$ is an entire function of ξ which can be represented in the form

$$g(\xi) = \sum_{n=o}^{\infty} g^{(n)}(0) \frac{\xi^n}{n!} = \sum_{n=o}^{\infty} (\alpha_n + i\beta_n) \frac{\xi^n}{n!}$$

Note: The reader is cautioned not to confuse the α_n, β_n defined by $g^{(n)}(0) = \alpha_n + i\beta_n$ with the Airy integral roots defined by $Ai(-\alpha_s) = 0$ and $Ai'(-\beta_s) = 0$.

where $g^{(n)}(0)$ can be evaluated by summing the divergent series

$$g^{(n)}(0) = \exp\left(i\frac{5n\pi}{6}\right) \sum_{s=1}^{\infty} \frac{\beta_s^{\,n-1}}{Ai(-\beta_s)}$$

by means of the Euler summation scheme. We can also write

$$\mathrm{Re}\, g^{(n)}(0) = \alpha_n = \frac{1}{\pi}\left\{\left[\cos\frac{5n\pi}{6} + \cos\frac{n\pi}{2}\right]J_1(n) + \left[\sin\frac{5n\pi}{6} + \sin\frac{n\pi}{2}\right]J_2(n)\right\}$$

$$\mathrm{Im}\, g^{(n)}(0) = \beta_n = \frac{1}{\pi}\left\{\left[-\sin\frac{5n\pi}{6} + \sin\frac{n\pi}{2}\right]J_1(n) + \left[\cos\frac{5n\pi}{6} - \cos\frac{n\pi}{2}\right]J_2(n)\right\}$$

where the integrals

$$J_1(n) = \int_0^{\infty} \frac{t^n\, Ai'(t)}{\left[Bi'(t)\right]^2 + \left[Ai'(t)\right]^2}\, dt$$

$$J_2(n) = \int_0^{\infty} \frac{t^n\, Bi'(t)}{\left[Bi'(t)\right]^2 + \left[Ai'(t)\right]^2}\, dt$$

can be evaluated numerically.

For large negative values of ξ, we can show that $g(\xi)$ has an asymptotic expansion of the form

$$g(\xi) \xrightarrow[\xi \to -\infty]{} 2\exp(-i\frac{\xi^3}{3})\left\{1 + i\frac{1}{4\xi^3} - \frac{1}{\xi^6} - i\frac{469}{64}\frac{1}{\xi^9} + \frac{5005}{64}\frac{1}{\xi^{12}} + i\frac{11\,22121}{1024}\frac{1}{\xi^{15}} - \frac{24\,33368}{128}\frac{1}{\xi^{18}}\right.$$
$$- i\frac{16102\,89919}{4096}\frac{1}{\xi^{21}} + \frac{3\,86598\,44839}{4096}\frac{1}{\xi^{24}} + i\frac{6763\,07799\,35425}{262144}\frac{1}{\xi^{27}}$$
$$\left. - \frac{51837\,22434\,61681}{65536}\frac{1}{\xi^{30}} + \cdots\right\}$$

We have also shown that $g^{(n)}(\xi)$ has an asymptotic expansion of the form

$$g^{(n)}(\xi) = (-i\xi^2)^n\, 2\exp(-i\frac{\xi^3}{3})\left\{1 + i\frac{A_1^{(n)}}{\xi^3} - \frac{A_2^{(n)}}{\xi^6} - i\frac{A_3^{(n)}}{\xi^9} + \frac{A_4^{(n)}}{\xi^{12}} + \cdots\right\} \tag{15.59}$$

where

$$A_1^{(n+1)} = A_1^{(n)} + (2n)$$

$$A_m^{(n+1)} = A_m^{(n)} + (2n - 3m + 3)\,A_{m-1}^{(n)}, \quad m > 1. \tag{15.60}$$

In Table 29 we give a set of values for $A_m^{(n)}$.

For negative values of n (the integrals of $g(\xi)$) we must add to the asymptotic expansion the contour integral

$$\tilde{g}^{(n)}(\xi) = -\frac{1}{\sqrt{\pi}}\int_c \frac{(it)^n \exp(i\xi t)}{w_1'(t)}\,dt \tag{15.61}$$

where c is a contour which encircles the origin in a counterclockwise direction.

Table 29

TABLE OF COEFFICIENTS $A_m^{(n)}$ FOR ASYMPTOTIC EXPANSION OF

$$g^{(n)}(\xi) = 2(-i\xi^2)^n \exp(-i\xi^3/3)\left\{1 + i\frac{A_1^{(n)}}{\xi^3} - \frac{A_2^{(n)}}{\xi^6} - i\frac{A_3^{(n)}}{\xi^9} + \frac{A_4^{(n)}}{\xi^{12}} + \dots\right\}, \qquad n > 0$$

$$g^{(n)}(\xi) = \tilde{g}^{(n)}(\xi) + 2(-i\xi^2)^n \exp(-i\xi^3/3)\left\{1 + i\frac{A_1^{(n)}}{\xi^3} - \frac{A_2^{(n)}}{\xi^6} - i\frac{A_3^{(n)}}{\xi^9} + \frac{A_4^{(n)}}{\xi^{12}} + \dots\right\}, \quad n < 0$$

m \ n	-10	-9	-8	-7
1	$\frac{441}{4}$	$\frac{361}{4}$	$\frac{289}{4}$	$\frac{225}{4}$
2	8176	$\frac{22561}{4}$	3745	$\frac{9489}{4}$
3	$\frac{33528789}{64}$	$\frac{19923925}{64}$	$\frac{11260501}{64}$	$\frac{5987541}{64}$
4	$\frac{2028562165}{64}$	$\frac{264056821}{16}$	$\frac{518281309}{64}$	$\frac{14798049}{4}$
5				
6				

m \ n	-6	-5	-4	-3
1	$\frac{169}{4}$	$\frac{121}{4}$	$\frac{81}{4}$	$\frac{49}{4}$
2	1416	$\frac{3129}{4}$	$\frac{1556}{4}$	$\frac{665}{4}$
3	$\frac{2951061}{64}$	$\frac{1319829}{64}$	$\frac{518805}{64}$	$\frac{170261}{64}$
4	$\frac{99055341}{64}$	$\frac{37083060}{64}$	$\frac{12006309}{64}$	$\frac{3186624}{64}$
5		$\frac{17993830281}{64}$	$\frac{4940593161}{1024}$	$\frac{1098574281}{1024}$
6		$\frac{5903251 23489}{1024}$	$\frac{140479376464}{1024}$	$\frac{26845733761}{1024}$

Table 29 (Concluded)

TABLE OF COEFFICIENTS $A_m^{(n)}$ FOR ASYMPTOTIC EXPANSION OF

$$g^{(n)}(\xi) = 2(-i\xi^2)^n \exp(-i\xi^3/3)\left\{1 + i\frac{A_1^{(n)}}{\xi^3} - \frac{A_2^{(n)}}{\xi^6} - i\frac{A_3^{(n)}}{\xi^9} + \frac{A_4^{(n)}}{\xi^{12}} + \ldots\right\}, \qquad n > 0$$

$$g^{(n)}(\xi) = \tilde{g}^{(n)}(\xi) + 2(-i\xi^2)^n \exp(-i\xi^3/3)\left\{1 + i\frac{A_1^{(n)}}{\xi^3} - \frac{A_2^{(n)}}{\xi^6} - i\frac{A_3^{(n)}}{\xi^9} + \frac{A_4^{(n)}}{\xi^{12}} + \ldots\right\}, \; n < 0$$

m \ n	-2	-1	0	1
1	$\frac{25}{4}$	$\frac{9}{4}$	$\frac{1}{4}$	$\frac{1}{4}$
2	$\frac{224}{4}$	$\frac{49}{4}$	1	$\frac{1}{4}$
3	$\frac{42581}{64}$	$\frac{6741}{64}$	$\frac{469}{64}$	$\frac{85}{64}$
4	$\frac{632709}{64}$	$\frac{79156}{64}$	$\frac{5005}{64}$	$\frac{784}{64}$
5	$\frac{180826569}{1024}$	$\frac{18853065}{1024}$	$\frac{1122121}{1024}$	$\frac{161161}{1024}$
6	$\frac{3775673860}{1024}$	$\frac{339969049}{1024}$	$\frac{2433368}{128}$	$\frac{2635129}{1024}$

m \ n	2	3	4	5
1	$\frac{9}{4}$	$\frac{25}{4}$	$\frac{49}{4}$	$\frac{81}{4}$
2	0	$\frac{9}{4}$	$\frac{84}{4}$	$\frac{329}{4}$
3	$\frac{21}{64}$	$\frac{21}{64}$	$\frac{21}{64}$	$\frac{2709}{64}$
4	$\frac{189}{64}$	$\frac{84}{64}$	$\frac{21}{64}$	0
5	$\frac{35721}{1024}$	$\frac{11529}{1024}$	$\frac{3465}{1024}$	$\frac{2121}{1024}$
6	$\frac{540036}{1024}$	$\frac{147105}{1024}$	$\frac{43344}{1024}$	$\frac{19089}{1024}$

If we write

$$\tilde{g}^{(n)}(\xi) = \sum_{r=0}^{\infty} \left(\tilde{\alpha}_{r+n} + i\,\tilde{\beta}_{r+n}\right)\frac{\xi^r}{r!}$$

$$\tilde{\alpha}_n + i\,\tilde{\beta}_n = -\frac{1}{\sqrt{\pi}} \int_c \frac{(it)^n}{w_1'(t)}\,dt \tag{15.62}$$

we can show that

$$\tilde{\alpha}_n + i\,\tilde{\beta}_n = 0 \qquad n \geq 0$$

$$\tilde{\alpha}_{-1} + i\,\tilde{\beta}_{-1} = -2\sqrt{\pi}\,\frac{1}{w_1'(0)} = -\frac{1}{\beta}\exp\left(i\,\frac{\pi}{6}\right) = -3.3460590 - i\,1.9318490$$

$$\tilde{\alpha}_{-2} + i\,\tilde{\beta}_{-2} = 0$$

$$\tilde{\alpha}_{-3} + i\,\tilde{\beta}_{-3} = -\sqrt{\pi}\,\frac{w_1(0)}{\left[w_1'(0)\right]^2} = -\frac{1}{2}\,\frac{\alpha}{\beta^2}\exp\left(i\,\frac{\pi}{2}\right) = -i\,2.6499581$$

$$\tilde{\alpha}_{-4} + i\,\tilde{\beta}_{-4} = i\,\frac{2}{3}\sqrt{\pi}\,\frac{1}{w_1'(0)} = i\,\frac{1}{3}\,\frac{1}{\beta}\exp\left(i\,\frac{\pi}{6}\right) = -0.6439497 + i\,1.1153530$$

$$\tilde{\alpha}_{-5} + i\,\tilde{\beta}_{-5} = -\frac{1}{2}\sqrt{\pi}\,\frac{\left[w_1(0)\right]^2}{\left[w_1'(0)\right]^3} = -\frac{1}{4}\,\frac{\alpha^2}{\beta^3}\exp\left(i\,\frac{5\pi}{6}\right) = 1.5740020 - i\,0.9087509$$

$$\tilde{\alpha}_{-6} + i\,\tilde{\beta}_{-6} = i\,\frac{3}{5}\sqrt{\pi}\,\frac{w_1(0)}{\left[w_1'(0)\right]^2} = i\,\frac{3}{10}\,\frac{\alpha}{\beta^2}\exp\left(i\,\frac{\pi}{2}\right) = -1.5899749$$

$$\tilde{\alpha}_{-7} + i\,\tilde{\beta}_{-7} = \frac{7}{36}\sqrt{\pi}\,\frac{1}{w_1'(0)} - \frac{1}{4}\sqrt{\pi}\,\frac{\left[w_1(0)\right]^3}{\left[w_1'(0)\right]^4} = \frac{7}{72}\,\frac{1}{\beta}\exp\left(i\,\frac{\pi}{6}\right) - \frac{1}{8}\,\frac{\alpha^3}{\beta^4}\exp\left(i\,\frac{7\pi}{6}\right)$$

$$= 1.4048572 + i\,0.8110951 \tag{15.63}$$

Cont.

$$\tilde{\alpha}_{-8} + i\,\tilde{\beta}_{-8} = i\,\frac{1}{10}\sqrt{\pi}\,\frac{\left[w_1(0)\right]^2}{\left[w_1'(0)\right]^3} = i\,\frac{1}{20}\,\frac{\alpha^2}{\beta^3}\exp\left(i\,\frac{5\pi}{6}\right) = -\,0.1817502 - i\,0.3148004$$

$$\tilde{\alpha}_{-9} + i\,\tilde{\beta}_{-9} = -\,\frac{1}{8}\sqrt{\pi}\,\frac{\left[w_1(0)\right]^4}{\left[w_1'(0)\right]^5} + \frac{21}{80}\sqrt{\pi}\,\frac{w_1(0)}{\left[w_1'(0)\right]^2} = -\,\frac{1}{16}\,\frac{\alpha^4}{\beta^5}\exp\left(i\,\frac{3\pi}{2}\right) + \frac{21}{160}\,\frac{\alpha}{\beta^2}\exp\left(i\,\frac{\pi}{2}\right)$$

$$= i\,1.5505755$$

$$\tilde{\alpha}_{-10} + i\,\tilde{\beta}_{-10} = i\,\frac{17}{60}\sqrt{\pi}\,\frac{\left[w_1(0)\right]^3}{\left[w_1'(0)\right]^4} - i\,\frac{127}{2268}\sqrt{\pi}\,\frac{1}{w_1'(0)} = i\,\frac{17}{120}\,\frac{\alpha^3}{\beta^4}\exp\left(i\,\frac{7\pi}{6}\right) - i\,\frac{127}{4536}\,\frac{1}{\beta}\exp\left(i\,\frac{\pi}{6}\right)$$

$$= 0.7604683 - i\,1.3171691$$

Although the function $\tilde{g}^{(n)}(\xi)$ must be added to the asymptotic expansion in order to represent $g^{(n)}(\xi)$ for large negative ξ, it will generally be found that when computing $g_n(\xi)$ in terms of $g^{(n)}(\xi)$ the terms involving $\tilde{g}^{(n)}(\xi)$ vanish.

The coefficients α_n, β_n given in Table 25 can be used to compute $g_n(\xi)$. Thus,

$$g_0(\xi) = \sum_{s=0}^{\infty}\left(A_s^0 + i\,B_s^0\right)\frac{\xi^s}{s!}$$

$$A_s^0 = \alpha_s$$

$$B_s^0 = \beta_s$$

$$g_1(\xi) = \sum_{s=0}^{\infty}\left(A_s' + i\,B_s'\right)\frac{\xi^s}{s!}$$

$$A_s' = -\,(s-1)\,\alpha_{s-2}$$

$$B_s' = -\,(s-1)\,\beta_{s-2} \qquad (15.64)\ \text{Cont.}$$

$$g_2(\xi) = \sum_{s=0}^{\infty} \left(A_s^2 + i\, B_s^2\right) \frac{\xi^s}{s!}$$

$$A_s^2 = \frac{(s-3)(s-1)}{2}\, \alpha_{s-4} - \frac{1}{2}\, \beta_{s-1}$$

$$B_s^2 = \frac{(s-3)(s-1)}{2}\, \beta_{s-4} + \frac{1}{2}\, \alpha_{s-1}$$

$$g_3(\xi) = \sum_{s=0}^{\infty} \left(A_s^3 + i\, B_s^3\right) \frac{\xi^s}{s!}$$

$$A_s^3 = \frac{3(s-1)(2s-5) - s(s-1)(s-2)}{6}\, \alpha_{s-6} - \frac{9-5s}{6}\, \beta_{s-3}$$

$$B_s^3 = \frac{3(s-1)(2s-5) - s(s-1)(s-2)}{6}\, \beta_{s-6} + \frac{9-5s}{6}\, \alpha_{s-3}$$

$$g_4(\xi) = \sum_{s=0}^{\infty} \left(A_s^4 + i\, B_s^4\right) \frac{\xi^s}{s!}$$

$$A_s^4 = (s-1)\left\{\frac{15(3s-7) + s(s-2)(s-13)}{24}\right\} \alpha_{s-8} - \frac{14s^2 - 78s + 91}{24}\, \beta_{s-5} - \frac{3}{8}\, \alpha_{s-2}$$

$$B_s^4 = (s-1)\left\{\frac{15(3s-7) + s(s-2)(s-13)}{24}\right\} \beta_{s-8} + \frac{14s^2 - 78s + 91}{24}\, \alpha_{s-5} - \frac{3}{8}\, \beta_{s-2}$$

$$g_5(\xi) = \sum_{s=0}^{\infty} \left(A_s^5 + i\, B_s^5\right) \frac{\xi^s}{s!}$$

$$A_s^5 = \left\{(s-1)(s-3)\left[-\frac{7}{8}(s-3) + \frac{1}{120}\, s(s-2)(19-s)\right]\right\} \alpha_{s-10}$$

$$+ \left\{\frac{1}{40}(277s - 357) + \frac{1}{12}\, s(s-1)(3s-31)\right\} \beta_{s-7} + \left\{\frac{1}{120}(89s - 233)\right\} \alpha_{s-4}$$

$$B_s^5 = \left\{(s-1)(s-3)\left[-\frac{7}{8}(s-3) + \frac{1}{120}\, s(s-2)(19-s)\right]\right\} \beta_{s-10}$$

$$- \left\{\frac{1}{40}(277s - 357) + \frac{1}{12}\, s(s-1)(3s-31)\right\} \alpha_{s-7} + \left\{\frac{1}{120}(89s - 233)\right\} \beta_{s-4}$$

(15.64)
Cont.

15.5 THE INTEGRALS $r_n(\xi)$

The functions $r_n(\xi)$ have the property that

$$r_0(\xi) = 2\sqrt{\pi}\, i \sum_{s=1}^{\infty} (i\xi) \frac{\exp(i\xi t_s^{\infty})}{[w_1'(t_s^{\infty})]^2} = i\xi\, \hat{p}^{(0)}(\xi)$$

$$r_1(\xi) = 2\sqrt{\pi}\, i \sum_{s=1}^{\infty} \left(-\frac{1}{2}\xi^2\right) \frac{\exp(i\xi t_s^{\infty})}{[w_1'(t_s^{\infty})]^2} = -\frac{1}{2}\xi^2\, \hat{p}^{(0)}(\xi)$$

$$r_2(\xi) = 2\sqrt{\pi}\, i \sum_{s=1}^{\infty} \left(\frac{1}{3} + i\frac{1}{3}\xi t_s^{\infty} - i\frac{1}{6}\xi^3\right) \frac{\exp(i\xi t_s^{\infty})}{[w_1'(t_s^{\infty})]^2} = \left[-i\frac{1}{6}\xi^3 + \frac{1}{3}\right]\hat{p}^{(0)}(\xi) + \frac{1}{3}\xi\, \hat{p}^{(1)}(\xi)$$

$$r_3(\xi) = 2\sqrt{\pi}\, i \sum_{s=1}^{\infty} \left(i\frac{7}{12}\xi + \frac{1}{24}\xi^4 - \frac{1}{3}\xi^2 t_s^{\infty}\right) \frac{\exp(i\xi t_s^{\infty})}{[w_1'(t_s^{\infty})]^2} = \left[\frac{1}{24}\xi^4 + i\frac{7}{12}\xi\right]\hat{p}^{(0)}(\xi) + i\frac{1}{3}\xi^2\hat{p}^{(1)}(\xi)$$

$$r_4(\xi) = 2\sqrt{\pi}\, i \sum_{s=1}^{\infty} \left[-\frac{5}{12}\xi^2 + i\frac{1}{120}\xi^5 + \frac{2}{5}t_s^{\infty} - i\frac{1}{6}\xi^3 t_s^{\infty} + i\frac{1}{5}\xi (t_s^{\infty})^2\right] \frac{\exp(i\xi t_s^{\infty})}{[w_1'(t_s^{\infty})]^2}$$

$$= \left(i\frac{1}{120}\xi^5 - \frac{5}{12}\xi^2\right)\hat{p}^{(0)}(\xi) - \left(\frac{1}{6}\xi^3 + i\frac{2}{5}\right)\hat{p}^{(1)}(\xi) - i\frac{1}{5}\xi\, \hat{p}^{(2)}(\xi)$$

$$r_5(\xi) = 2\sqrt{\pi}\, i \sum_{s=1}^{\infty} \left[-\frac{1}{720}\xi^6 - i\frac{13}{72}\xi^3 + \frac{7}{18} + \frac{1}{18}\xi^4 t_s^{\infty} + i\frac{9}{10}\xi t_s^{\infty} - \frac{23}{90}\xi^2 (t_s)^2\right] \frac{\exp(i\xi t_s^{\infty})}{[w_1'(t_s^{\infty})]^2}$$

$$= \left[-\frac{1}{720}\xi^6 - i\frac{13}{72}\xi^3 + \frac{7}{18}\right]\hat{p}^{(0)}(\xi) + \left[\frac{9}{10}\xi - i\frac{1}{18}\xi^4\right]\hat{p}^{(1)}(\xi) + \frac{23}{90}\xi^2\, \hat{p}^{(2)}(\xi) \qquad (15.65)$$

In general, we can show that

$$r_n(\xi) = \frac{i\xi}{n+1} r_{n-1}(\xi) - i\frac{n-1}{n+1}\frac{d}{d\xi} r_{n-2}(\xi) \tag{15.66}$$

The functions $\hat{p}^{(n)}(\xi)$ are defined by

$$\hat{p}^{(n)}(\xi) = \frac{d^n}{d\xi^n}\hat{p}(\xi)$$

where

$$\hat{p}(\xi) = \hat{p}^{(0)}(\xi) = 2\sqrt{\pi}\, i \sum_{s=1}^{\infty} \frac{\exp(i\xi t_s^{\infty})}{[w_1'(t_s^{\infty})]^2}$$

$$= -\frac{1}{2\sqrt{\pi}} \exp\left(-i\frac{\pi}{6}\right) \sum_{s=1}^{\infty} \frac{\exp\left(-\frac{\sqrt{3}-i}{2}\alpha_s\xi\right)}{[Ai'(-\alpha_s)]^2}$$

$$= -\frac{\exp\left(i\frac{\pi}{6}\right)}{2\sqrt{\pi}} \int_{c-i\infty}^{c+i\infty} \exp\left(\frac{\sqrt{3}-i}{2}p\xi\right) \frac{Ai\left[\exp\left(i\frac{2\pi}{3}\right)p\right]}{Ai(p)}\, dp$$

$$= \frac{1}{\sqrt{\pi}} \int_{-\infty}^{\infty} \exp(i\xi t)\, \frac{v(t)}{w_1(t)}\, dt$$

$$= \frac{1}{\sqrt{\pi}} \int_{-\infty}^{\infty} \exp(i\xi t)\, \frac{Ai(t)}{Bi(t) + i\, Ai(t)}\, dt$$

$$= \frac{1}{2\sqrt{\pi}\,\xi} + \frac{\exp\left(-i\frac{\pi}{3}\right)}{\sqrt{\pi}} \int_{0}^{\infty} \exp\left(-\frac{\sqrt{3}+i}{2}\xi t\right) \frac{Ai(t)}{Bi(t) - i\, Ai(t)}\, dt$$

$$+ \frac{1}{\sqrt{\pi}} \int_{0}^{\infty} \exp(i\xi t)\, \frac{Ai(t)}{Bi(t) + i\, Ai(t)}\, dt$$

We can show that $\hat{p}(\xi)$ can be represented for all finite values of ξ, except $\xi = 0$, by a Laurent expansion of the form

$$\hat{p}(\xi) = -\frac{1}{2\sqrt{\pi}\,\xi} + p(\xi)$$

where $p(\xi)$ is an entire function of ξ,

$$p(\xi) = \frac{\exp\left(-i\frac{\pi}{3}\right)}{\sqrt{\pi}} \int_0^\infty \exp\left(-\frac{\sqrt{3}+i}{2}\xi t\right) \frac{Ai(t)}{Bi(t) - i\,Ai(t)}\,dt + \frac{1}{\sqrt{\pi}} \int_0^\infty \exp(i\xi t)\,\frac{Ai(t)}{Bi(t) + i\,Ai(t)}\,dt\,.$$

We can express $p(\xi)$ in the form of a Taylor series

$$p(\xi) = \sum_{n=0}^{\infty} p^{(n)}(0)\,\frac{\xi^n}{n!} = \sum_{n=0}^{\infty} (c_n + i\,d_n)\frac{\xi^n}{n!}$$

where $p^{(n)}(0)$ is to be evaluated by summing the divergent series

$$p^{(n)}(0) = c_n + i\,d_n = -\frac{\exp\left[i(5n-1)\frac{\pi}{6}\right]}{2\sqrt{\pi}} \sum_{s=1}^{\infty} \frac{\alpha_s^n}{\left[Ai(-\alpha_s)\right]^2}$$

by means of the Euler-Maclaurin summation scheme

$$\begin{aligned}\sum_{s=N}^{\infty} f(s) = \frac{1}{2}f(N) + \int_N^\infty f(s)\,ds &- \frac{1}{12}\Delta f(N) + \frac{1}{24}\Delta^2 f(N) - \frac{19}{720}\Delta^3 f(N) + \frac{3}{160}\Delta^4 f(N) \\ &- \frac{863}{60480}\Delta^5 f(N) + \frac{275}{24192}\Delta^6 f(N) - \frac{33953}{3628800}\Delta^7 f(N) \\ &+ \frac{8183}{1036800}\Delta^8 f(N) - \frac{3250433}{479001600}\Delta^9 f(N) + \frac{4671}{788480}\Delta^{10} f(N) \\ &- \frac{13695779093}{2615348736000}\Delta^{11} f(N) + \cdots\end{aligned}$$

The Olver relation

$$\frac{d\alpha_s}{ds} = \frac{1}{\left[Ai'(-\alpha_s)\right]^2}$$

permits us to interpret the integral in the sense

$$-\frac{\exp\left[i(5n-1)\frac{\pi}{6}\right]}{2\sqrt{\pi}} \int_N^\infty \frac{\alpha_s^n}{\left[Ai(-\alpha_s)\right]^2} ds = \frac{\exp\left[-i(5n-1)\frac{\pi}{6}\right]}{2\sqrt{\pi}} \frac{(\alpha_N)^{n+1}}{n+1}$$

We can also write

$$c_n = \frac{1}{\sqrt{\pi}}\left\{\left[\cos\frac{5n+2}{6}\pi + \cos\frac{n\pi}{2}\right]I_3(n) + \left[\sin\frac{5n+2}{6}\pi + \sin\frac{n\pi}{2}\right]I_4(n)\right\}$$

$$d_n = \frac{1}{\sqrt{\pi}}\left\{\left[-\sin\frac{5n+2}{6}\pi + \sin\frac{n\pi}{2}\right]I_3(n) + \left[\cos\frac{5n+2}{6}\pi - \cos\frac{n\pi}{2}\right]I_4(n)\right\}$$

where the integrals

$$I_3(n) = \int_0^\infty \frac{t^n Ai(t)\, Ai(t)}{Bi^2(t) + Ai^2(t)} dt$$

$$I_4(n) = \int_0^\infty \frac{t^n Ai(t)\, Bi(t)}{Bi^2(t) + Ai^2(t)} dt$$

can be evaluated numerically.

For large negative values of ξ, we can show that $\hat{p}(\xi)$ has an asymptotic expansion of the form

$$\hat{p}(\xi) \xrightarrow[\xi \to -\infty]{} \frac{\sqrt{-\xi}}{2} \exp\left[-i\left(\frac{\xi^3}{12} + \frac{\pi}{4}\right)\right] \left\{1 - i\frac{2}{\xi^3} + \frac{20}{\xi^6} + i\frac{560}{\xi^9} - \frac{25520}{\xi^{12}} - i\frac{16\ 01600}{\xi^{15}} + \frac{1115\ 68000}{\xi^{18}} + i\frac{1\ 22874\ 36800}{\xi^{21}} - \frac{138\ \ 63185\ 60000}{\xi^{24}} - i\frac{18276\ 69924\ 99200}{\xi^{27}} + \frac{27\ 64468\ 11630\ 84800}{\xi^{30}} + \cdots\right\}$$

We have also shown that $\hat{p}^{(n)}(\xi)$ has an asymptotic expansion of the form

$$\hat{p}^{(n)}(\xi) \xrightarrow[\xi \to -\infty]{} \left(-i\frac{\xi^2}{4}\right)^n \frac{\sqrt{-\xi}}{2} \exp\left[-i\left(\frac{\xi^3}{12} + \frac{\pi}{4}\right)\right] \left\{1 - i\frac{A_1^{(n)}}{\xi^3} + \frac{A_2^{(n)}}{\xi^6} + i\frac{A_3^{(n)}}{\xi^9} - \frac{A_4^{(n)}}{\xi^{12}} + \cdots\right\} \tag{15.67}$$

where

$$\begin{aligned} A_1^{(n+1)} &= A_1^{(n)} - (8n + 2) \\ A_m^{(n+1)} &= A_m^{(n)} + (8n - 12m + 14)\, A_{m-1}^{(n)}, \quad m > 1 \end{aligned} \tag{15.68}$$

In Table 30 we list values of $A_m^{(n)}$.

Table 30

TABLE OF COEFFICIENTS $A_m^{(n)}$ FOR ASYMPTOTIC EXPANSION OF

$$\hat{p}^{(n)}(-x) = (-i)^n \frac{x^{2n+1/2}}{2^{2n+1/2}} \exp\left[i\left(\frac{x^3}{12} - \frac{\pi}{4}\right)\right]\left\{1 + i\frac{A_1^n}{x^3} + \frac{A_2^n}{x^6} - i\frac{A_3^n}{x^9} - \frac{A_4^n}{x^{12}} + i\frac{A_5^n}{x^{15}} + \ldots\right\}$$

m \ n	-5	-4	-3	-2
0	1	1	1	1
1	-108	-70	-40	-18
2	-10220	-4820	-1880	-520
3	-100160	-367520	-107240	-20760
4	-105616560	-31530720	-7274400	-1054480
5	-12116294400	-3033270240	-573874080	-64666080
6	-1512075598400	-324678747200	-51684425600	-4626751040

m \ n	-1	0	1	2
0	1	1	1	1
1	-4	2	0	-10
2	-52	20	0	0
3	-1000	560	120	120
4	-16480	25520	6480	3360
5	711680	1601600	427680	181440
6	158538880	111568000	18675200	-2708800

Table 30 (Concluded)

TABLE OF COEFFICIENTS $A_m^{(n)}$ FOR ASYMPTOTIC EXPANSION OF

$$\hat{p}^{(n)}(-x) = (-i)^n \frac{x^{2n+1/2}}{2^{2n+1/2}} \exp\left[i\left(\frac{x^3}{12} - \frac{\pi}{4}\right)\right]\left\{1 + i\frac{A_1^n}{x^3} + \frac{A_2^n}{x^6} - i\frac{A_3^n}{x^9} - \frac{A_4^n}{x^{12}} + i\frac{A_5^n}{x^{15}} + \ldots\right\}$$

m \ n	3	4	5
0	1	1	1
1	-28	-54	-88
2	-60	-452	-1640
3	120	0	-4520
4	1200	0	0
5	80640	54240	54240
6	-10329280	-13071040	-14481280

We can also show that

$$r_o(-x) = -i\frac{x^{3/2}}{2}\exp\left[i\left(\frac{x^3}{12}-\frac{\pi}{4}\right)\right]\left\{1 + i\frac{2}{x^3} + \frac{20}{x^6} - i\frac{560}{x^9} - \frac{25520}{x^{12}} + \cdots\right\}$$

$$r_1(-x) = -\frac{x^{5/2}}{4}\exp\left[i\left(\frac{x^3}{12}-\frac{\pi}{4}\right)\right]\left\{1 + i\frac{2}{x^3} + \frac{20}{x^6} - i\frac{560}{x^9} - \frac{25520}{x^{12}} + \cdots\right\}$$

$$r_2(-x) = i\frac{x^{3/2}}{8}\exp\left[i\left(\frac{x^3}{12}-\frac{\pi}{4}\right)\right]\left\{1 + i\frac{[0]}{x^3} + \frac{16}{x^6} - i\frac{440}{x^9} - \frac{19920}{x^{12}} + \cdots\right\}$$

$$r_3(-x) = \frac{x^{4/2}}{16}\exp\left[i\left(\frac{x^3}{12}-\frac{\pi}{4}\right)\right]\left\{1 - i\frac{5}{3x^3} + \frac{34}{3x^6} - i\frac{940}{3x^9} - \frac{42400}{3x^{12}} + \cdots\right\}$$

$$r_4(-x) = -i\frac{x^{5/2}}{32}\exp\left[i\left(\frac{x^3}{12}-\frac{\pi}{4}\right)\right]\left\{1 - i\frac{10}{x^3} + \frac{16}{x^6} - i\frac{312}{x^9} - \frac{12320}{x^{12}} + \cdots\right\}$$

$$r_5(-x) = -\frac{x^{6/2}}{64}\exp\left[i\left(\frac{x^3}{12}-\frac{\pi}{4}\right)\right]\left\{1 - i\frac{18}{x^3} + \frac{0}{x^6} - i\frac{280}{x^9} - \frac{10080}{x^{12}} + \cdots\right\}$$

$$r_6(-x) = i\frac{x^{7/2}}{128}\exp\left[i\left(\frac{x^3}{12}-\frac{\pi}{4}\right)\right]\left\{1 - i\frac{28}{x^3} - \frac{60}{x^6} - i\frac{1840}{7x^9} - \frac{8560}{x^{12}} + \cdots\right\} \qquad (15.69)$$

We can also write

$$r_o(\xi) = -\frac{i}{2\sqrt{\pi}} + i\xi\, p^{(0)}(\xi)$$

$$r_1(\xi) = \frac{\xi}{4\sqrt{\pi}} - \frac{\xi^2}{2}\, p^{(0)}(\xi)$$

$$r_2(\xi) = \frac{i\xi^2}{12\sqrt{\pi}} + \left(-\frac{i\xi^3}{6} + \frac{1}{3}\right)p^{(0)}(\xi) + \frac{\xi}{3}\, p^{(1)}(\xi) \qquad (15.70)\ \text{Cont.}$$

$$r_3(\xi) = -\frac{1}{2\sqrt{\pi}}\left(\frac{\xi^3}{24} + \frac{i}{4}\right) + \left(\frac{\xi^4}{24} + i\,\frac{7}{12}\,\xi\right) p^{(0)}(\xi) + i\,\frac{\xi^2}{3}\,p^{(1)}(\xi)$$

$$r_4(\xi) = -\frac{1}{2\sqrt{\pi}}\left(\frac{i\,\xi^4}{120} - \frac{\xi}{4}\right) + \left(i\,\frac{\xi^5}{120} - \frac{5}{12}\,\xi^2\right) p^{(0)}(\xi) - \left(\frac{\xi^3}{6} + i\,\frac{2}{5}\right) p^{(1)}(\xi) - i\,\frac{1}{5}\,\xi\,p^{(2)}(\xi)$$

$$r_5(\xi) = -\frac{1}{2\sqrt{\pi}}\left(-\frac{\xi^5}{720} - i\,\frac{\xi^2}{8}\right) + \left(-\frac{\xi^6}{720} - i\,\frac{13}{72}\xi^3 + \frac{7}{18}\right) p^{(0)}(\xi) + \left(-i\,\frac{\xi^4}{18} + \frac{9\xi}{10}\right) p^{(1)}(\xi) + \frac{23}{90}\xi^2\,p^{(2)}(\xi)$$

We observe that the functions $r_n(\xi)$ are entire functions of ξ.

The coefficients c_n, d_n of Table 26 can be used to show that

$$r_0(\xi) = \sum_{r=0}^{\infty}\left(G_r^0 + i\,H_r^0\right)\frac{\xi^r}{r!}$$

$$G_r^0 = -\,r\,d_{r-1}$$

$$H_r^0 = r\,c_{r-1}$$

$$r_1(\xi) = \sum_{r=0}^{\infty}\left(G_r^1 + i\,H_r^1\right)\frac{\xi^r}{r!}$$

$$G_r^1 = -\,\frac{r(r-1)}{2}\,d_{r-2}$$

$$H_r^1 = \frac{r(r-1)}{2}\,c_{r-2}$$

$$r_2(\xi) = \sum_{r=0}^{\infty}\left(G_r^2 + i\,H_r^2\right)\frac{\xi^r}{r!}$$

$$G_r^2 = \frac{r(r-1)(r-2)}{6}\,d_{r-3} + \frac{r+1}{3}\,c_r$$

$$H_r^2 = -\,\frac{r(r-1)(r-2)}{6}\,c_{r-3} + \frac{r+1}{3}\,d_r \qquad (15.71)$$

Cont.

$$r_3(\xi) = \sum_{r=0}^{\infty} \left(G_r^3 + i\, H_r^3\right) \frac{\xi^r}{r!}$$

$$G_r^3 = \frac{r^4 - 6r^3 + 11r^2 - 6r}{24}\, c_{r-4} - \frac{r(4r+3)}{12}\, d_{r-1}$$

$$H_r^3 = \frac{r^4 - 6r^3 + 11r^2 - 6r}{24}\, d_{r-4} + \frac{r(4r+3)}{12}\, c_{r-1}$$

$$r_4(\xi) = \sum_{r=0}^{\infty} \left(G_r^4 + i\, H_r^4\right) \frac{\xi^r}{r!}$$

$$G_r^4 = -\frac{r^5 - 10r^4 + 35r^3 - 50r^2 + 24r}{120}\, d_{r-5} - \frac{r(r-1)(2r+1)}{12}\, c_{r-2} + \frac{r+2}{5}\, d_{r+1}$$

$$H_r^4 = \frac{r^5 - 10r^4 + 35r^3 - 50r^2 + 24r}{120}\, c_{r-5} - \frac{r(r-1)(2r+1)}{12}\, d_{r-2} - \frac{r+2}{5}\, c_{r+1}$$

$$r_5(\xi) = \sum_{r=0}^{\infty} \left(G_r^5 + i\, H_r^5\right) \frac{\xi^r}{r!}$$

$$G_r^5 = -\frac{r^6 - 15r^5 + 85r^4 - 225r^3 + 274r^2 - 120r}{720}\, c_{r-6} + \frac{r(r-1)(r-2)(4r+1)}{72}\, d_{r-3} + \frac{35 + r(58 + 23r)}{90}\, c_r$$

$$H_r^5 = -\frac{r^6 - 15r^5 + 85r^4 - 225r^3 + 274r^2 - 120r}{720}\, d_{r-6} - \frac{r(r-1)(r-2)(4r+1)}{72}\, c_{r-3} + \frac{35 + r(58 + 23r)}{90}\, d_r$$

(15.71)
Cont.

$$r_6(\xi) = \sum_{r=0}^{\infty} \left(G_r^6 + i\, H_r^6\right) \frac{\xi^r}{r!}$$

$$G_r^6 = \frac{r(r-1)(r-2)(r-3)(r-4)(r-5)(r-6)}{5040} d_{r-7} + \frac{r^2(r-1)(r-2)(r-3)}{72} c_{r-4}$$
$$- \left[\frac{41r}{63} + \frac{47r(r-1)}{60} + \frac{7r(r-1)(r-2)}{45}\right] d_{r-1} - \frac{r+3}{7} c_{r+2}$$

$$H_r^6 = - \frac{r(r-1)(r-2)(r-3)(r-4)(r-5)(r-6)}{5040} c_{r-7} + \frac{r^2(r-1)(r-2)(r-3)}{72} d_{r-4}$$
$$+ \left[\frac{41r}{63} + \frac{47r(r-1)}{60} + \frac{7r(r-1)(r-2)}{45}\right] c_{r-1} - \frac{r+3}{7} d_{r+2}$$

(15.71)

15.6 THE INTEGRALS $s_n(\xi)$

The functions $s_n(\xi)$ have the property that

$$s_0 = 2\sqrt{\pi}\, i \sum_{s=1}^{\infty} \left(i \frac{1}{t_s^o} \xi - \frac{1}{(t_s^o)^2}\right) \frac{\exp(i\xi t_s^o)}{t_s^o [w_1(t_s^o)]^2} = - \hat{q}^{(-2)}(\xi) + \xi\, \hat{q}^{(-1)}(\xi)$$

$$s_1 = 2\sqrt{\pi}\, i \sum_{s=1}^{\infty} \left(- \frac{1}{2(t_s^o)^2} \xi^2 - i \frac{3}{2(t_s^o)^3} \xi + \frac{3}{2(t_s^o)^4}\right) \frac{\exp(i\xi t_s^o)}{t_s^o [w_1(t_s^o)]^2}$$
$$= - \frac{3}{2} \hat{q}^{(-4)}(\xi) + \frac{3}{2} \xi\, \hat{q}^{(-3)}(\xi) - \frac{1}{2} \xi^2\, \hat{q}^{(-2)}(\xi)$$

$$s_2 = 2\sqrt{\pi}\, i \sum_{s=1}^{\infty} \left(i \frac{1}{3(t_s^o)^2} \xi - \frac{2}{3(t_s^o)^3} - i \frac{1}{6(t_s^o)^3} \xi^3 + \frac{1}{(t_s^o)^4} \xi^2 + i \frac{5}{2(t_s^o)^5} \xi - \frac{5}{2(t_s^o)^6}\right) \frac{\exp(i\xi t_s^o)}{t_s^o [w_1(t_s^o)]^2}$$
$$= - \frac{5}{2} \hat{q}^{(-6)}(\xi) + \frac{5}{2} \xi\, \hat{q}^{(-5)}(\xi) - \xi^2 \hat{q}^{(-4)}(\xi) + \left(\frac{1}{6} \xi^3 - i \frac{2}{3}\right) \hat{q}^{(-3)}(\xi) + i \frac{1}{3} \xi\, \hat{q}^{(-2)}(\xi)$$

(15.72)

$$s_3 = 2\sqrt{\pi}\, i \sum_{s=1}^{\infty} \left(-\frac{1}{3(t_s^o)^3}\xi^2 - i\frac{19}{12(t_s^o)^4}\xi + \frac{1}{24(t_s^o)^4}\xi^4 + \frac{7}{3(t_s^o)^5} + i\frac{5}{12(t_s^o)^5}\xi^3 \right.$$

$$\left. - \frac{15}{8(t_s^o)^6}\xi^2 - i\frac{35}{8(t_s^o)^7}\xi + \frac{35}{8(t_s^o)^8} \right) \frac{\exp(i\xi t_s^o)}{t_s^o \left| w_1(t_s^o) \right|^2}$$

$$= -\frac{35}{8}\hat{q}^{(-8)}(\xi) + \frac{35}{8}\xi\,\hat{q}^{(-7)}(\xi) - \frac{15}{8}\xi^2\,\hat{q}^{(-6)}(\xi) + \left(\frac{5}{12}\xi^3 - \frac{7}{3}\right)\hat{q}^{(-5)}(\xi)$$

$$- \left(\frac{1}{24}\xi^4 - i\frac{19}{12}\xi\right)\hat{q}^{(-4)}(\xi)$$

$$- i\frac{1}{3}\xi^2\,\hat{q}^{(-3)}(\xi)$$

$$s_4 = 2\sqrt{\pi}\, i \sum_{s=1}^{\infty} \left(i\frac{1}{5(t_s^o)^3}\xi - \frac{3}{5(t_s^o)^4} - i\frac{1}{6(t_s^o)^4}\xi^3 + \frac{17}{12(t_s^o)^5}\xi^2 + i\frac{1}{120(t_s^o)^5}\xi^5 + i\frac{24}{5(t_s^o)^6}\xi \right.$$

$$- \frac{1}{8(t_s^o)^6}\xi^4 - \frac{63}{10(t_s^o)^7} - i\frac{7}{8(t_s^o)^7}\xi^3 + \frac{7}{2(t_s^o)^8}\xi^2 + i\frac{63}{8(t_s^o)^9}\xi$$

$$\left. - \frac{63}{8(t_s^o)^{10}} \right) \frac{\exp(i\xi t_s^o)}{t_s^o \left| w_1(t_s^o) \right|^2}$$

$$= -\frac{63}{8}\hat{q}^{(-10)}(\xi) + \frac{63}{8}\xi\,\hat{q}^{(-9)}(\xi) - \frac{7}{2}\xi^2\,\hat{q}^{(-8)}(\xi) + \left(\frac{7}{8}\xi^3 - i\frac{63}{10}\right)\hat{q}^{(-7)}(\xi)$$

$$+ \left(i\frac{24}{5}\xi - \frac{1}{8}\xi^4\right)\hat{q}^{(-6)}(\xi)$$

$$+ \left(\frac{1}{120}\xi^5 - i\frac{17}{12}\xi^2\right)\hat{q}^{(-5)}(\xi)$$

$$+ \left(\frac{3}{5} + i\frac{1}{6}\xi^3\right)\hat{q}^{(-4)}(\xi) - \frac{1}{5}\xi\,\hat{q}^{(-3)}(\xi)$$

(15.72)
Cont.

$$s_5(\xi) = -\frac{231}{16}\hat{q}^{(-12)}(\xi) + \frac{231}{16}\xi\,\hat{q}^{(-11)}(\xi) - \frac{105}{16}\xi^2\,\hat{q}^{(-10)}(\xi)$$

$$+ \left(\frac{7}{4}\xi^3 - i\,\frac{77}{5}\right)\hat{q}^{(-9)}(\xi) - \left(\frac{7}{24}\xi^4 - i\,\frac{749}{60}\xi\right)\hat{q}^{(-8)}(\xi)$$

$$+ \left(\frac{7}{240}\xi^5 - i\,\frac{511}{120}\xi^2\right)\hat{q}^{(-7)}(\xi) - \left(\frac{1}{720}\xi^6 - i\,\frac{159}{216}\xi^3 - \frac{29}{9}\right)\hat{q}^{(-6)}(\xi)$$

$$- \left(i\,\frac{\xi^4}{18} + \frac{5}{3}\xi\right)\hat{q}^{(-5)}(\xi) + \frac{23}{90}\xi^2\,\hat{q}^{(-4)}(\xi) \qquad (15.72)$$

In general, we can show that

$$\frac{d\,s_n(\xi)}{d\xi} = -\frac{1}{n+1}\,\xi\,s_{n-1}(\xi) + i\,\frac{n-1}{n+1}\,s_{n-2}(\xi) \qquad (15.73)$$

The functions $\hat{q}^{(n)}(\xi)$ are defined by

$$\hat{q}^{(n)}(\xi) = \frac{d^n}{d\xi^n}\,\hat{q}(\xi)$$

where

$$\hat{q}(\xi) = \hat{q}^{(0)}(\xi) = -2\sqrt{\pi}\,i\sum_{s=1}^{\infty}\frac{\exp(i\xi t_s^o)}{t_s^o[w_1(t_s^o)]^2}$$

$$= -\frac{1}{2\sqrt{\pi}}\exp\left(-i\,\frac{\pi}{6}\right)\sum_{s=1}^{\infty}\frac{\exp\left(-\frac{\sqrt{3}-i}{2}\beta_s\xi\right)}{\beta_s[Ai(-\beta_s)]^2}$$

$$= \frac{i}{2\sqrt{\pi}}\int_{c-i\infty}^{c+i\infty}\exp\left(\frac{\sqrt{3}-i}{2}p\,\xi\right)\frac{Ai'\left[\exp\left(-i\,\frac{2\pi}{3}p\right)\right]}{Ai'(p)}\,dp$$

$$= \frac{1}{\sqrt{\pi}} \int_{-\infty}^{\infty} \exp(i\xi t) \frac{v'(t)}{w_1'(t)} dt$$

$$= \frac{1}{\sqrt{\pi}} \int_{-\infty}^{\infty} \exp(i\xi t) \frac{Ai'(t)}{Bi'(t) + i\, Ai'(t)} dt$$

$$= -\frac{1}{2\sqrt{\pi}\,\xi} + \frac{\exp\left(-i\frac{\pi}{3}\right)}{\sqrt{\pi}} \int_{0}^{\infty} \exp\left(-\frac{\sqrt{3}+i}{2}\xi t\right) \frac{Ai'(t)}{Bi'(t) - i\, Ai'(t)} dt$$

$$+ \frac{1}{\sqrt{\pi}} \int_{0}^{\infty} \exp(i\xi t) \frac{Ai'(t)}{Bi'(t) + i\, Ai'(t)} dt$$

We can show that $\hat{q}(\xi)$ can be represented for all finite values of ξ, except $\xi = 0$, by a Laurent expansion of the form

$$\hat{q}(\xi) = -\frac{1}{2\sqrt{\pi}\,\xi} + q(\xi)$$

where $q(\xi)$ is an entire function of ξ

$$q(\xi) = \frac{\exp\left(-i\frac{\pi}{3}\right)}{\sqrt{\pi}} \int_{0}^{\infty} \exp\left(-\frac{\sqrt{3}+i}{2}\xi t\right) \frac{Ai'(t)}{Bi'(t) - i\, Ai'(t)} dt + \frac{1}{\sqrt{\pi}} \int_{0}^{\infty} \exp(i\xi t) \frac{Ai'(t)}{Bi'(t) + i\, Ai'(t)} dt.$$

We can express $q(\xi)$ in the form of a Taylor series

$$q(\xi) = \sum_{n=o}^{\infty} q^{(n)}(0) \frac{\xi^n}{n!} = \sum_{n=o}^{\infty} (a_n + i b_n) \frac{\xi^n}{n!}$$

where $q^{(n)}(0)$ is to be evaluated by summing the divergent series

$$q^{(n)}(0) = a_n + i b_n = -\frac{\exp\left[i(5n-1)\frac{\pi}{6}\right]}{2\sqrt{\pi}} \sum_{s=1}^{\infty} \frac{\beta_s^n}{\beta_s[Ai(-\beta_s)]^2}$$

by means of the Euler-Maclaurin summation scheme. The Olver relation

$$\frac{d\beta_s}{ds} = \frac{1}{\beta_s[Ai(-\beta_s)]^2}$$

permits us to interpret the integral in the sense

$$-\frac{\exp\left[i(5n-1)\frac{\pi}{6}\right]}{2\sqrt{\pi}} \int_N^\infty \frac{\beta_s^n}{\beta_s[Ai(-\beta_s)]^2}\, ds = \frac{\exp\left[i(5n-1)\frac{\pi}{6}\right]}{2\sqrt{\pi}} \frac{(\beta_N)^{n+1}}{n+1}$$

We can also write

$$a_n = \frac{1}{\sqrt{\pi}}\left\{\left[\cos\frac{5n+2}{6}\pi + \cos\frac{n\pi}{2}\right]J_3(n) + \left[\sin\frac{5n+2}{6}\pi + \sin\frac{n\pi}{2}\right]J_4(n)\right\}$$

$$b_n = \frac{1}{\sqrt{\pi}}\left\{\left[-\sin\frac{5n+2}{6}\pi + \sin\frac{n\pi}{2}\right]J_3(n) + \left[\cos\frac{5n+2}{6}\pi - \cos\frac{n\pi}{2}\right]J_4(n)\right\}$$

where the integrals

$$J_3(n) = \int_0^\infty \frac{t^n\, Ai'(t)\, Ai(t)}{Bi'^2(t) + Ai'^2(t)}\, dt$$

$$J_4(n) = \int_0^\infty \frac{t^n\, Ai'(t)\, Bi'(t)}{Bi'^2(t) + Ai'^2(t)}\, dt$$

can be evaluated numerically.

For large negative values of ξ, we can show that $\hat{q}(\xi)$ has an asymptotic expansion of the form

$$\hat{q}(\xi) \underset{\xi \to -\infty}{\sim} -\frac{\sqrt{-\xi}}{2} \exp\left[-i\left(\frac{\xi^3}{12} + \frac{\pi}{4}\right)\right] \left\{1 + i\frac{2}{\xi^3} - \frac{28}{\xi^6} - i\frac{896}{\xi^9} + \frac{43120}{\xi^{12}} + i\frac{27\,54752}{\xi^{15}} - \frac{2190\,97984}{\xi^{18}} - i\frac{2\,08486\,79936}{\xi^{21}} + \frac{230\,98470\,54592}{\xi^{24}} + i\frac{29209\,4671769600}{\xi^{27}} - \frac{41\,52479\,68861\,14304}{\xi^{30}} + \cdots\right\}$$

We have also shown that $\hat{q}^{(n)}(\xi)$ has an asymptotic expansion of the form

$$\hat{q}^{(n)}(\xi) \underset{\xi \to -\infty}{\sim} -\left(-i\frac{\xi^2}{4}\right)^n \frac{\sqrt{-\xi}}{2} \exp\left[-i\left(\frac{\xi^3}{12} + \frac{\pi}{4}\right)\right] \left\{1 + i\frac{A_1^{(n)}}{\xi^3} - \frac{A_2^{(n)}}{\xi^6} - i\frac{A_3^{(n)}}{\xi^9} + \frac{A_4^{(n)}}{\xi^{12}} + \cdots\right\} \tag{15.74}$$

where

$$A_1^{(n+1)} = A_1^{(n)} + (8n + 2)$$

$$A_m^{(n+1)} = A_m^{(n)} + (8n - 10)\, A_{m-1}^{(n)}, \qquad m > 1 \tag{15.75}$$

In Table 31 we list values of $A_m^{(n)}$.

We can then show that

$$s_0(-x) = -i\,\frac{2\exp\left[i\left(\frac{x^3}{12} - \frac{\pi}{4}\right)\right]}{x^{1/2}} \left\{1 - i\frac{4}{x^3} - \frac{84}{x^6} + i\frac{3080}{x^9} + \frac{160160}{x^{12}} - i\frac{10762752}{x^{15}} + \cdots\right\} \tag{15.76}$$

Cont.

Table 31

TABLE OF COEFFICIENTS $A_m^{(n)}$ FOR ASYMPTOTIC EXPANSION OF

$$\hat{q}^{(n)}(-x) = -(-i)^n \frac{x^{2n+1/2}}{2^{2n+1/2}} \exp\left[i\left(\frac{x^3}{12} - \frac{\pi}{4}\right)\right]\left\{1 - i\frac{A_1^n}{x^3} - \frac{A_2^n}{x^6} + i\frac{A_3^n}{x^9} + \frac{A_4^n}{x^{12}} - i\frac{A_5^n}{x^{15}} + \ldots\right\}, \qquad n > 0$$

$$\hat{q}^{(n)}(-x) = \tilde{q}^{(n)}(-x) - (-i)^n \frac{x^{2n+1/2}}{2^{2n+1/2}} \exp\left[i\left(\frac{x^3}{12} \quad \frac{\pi}{4}\right)\right]\left\{1 - i\frac{A_1^n}{x^3} - \frac{A_2^n}{x^6} + i\frac{A_3^n}{x^9} + \frac{A_4^n}{x^{12}} - i\frac{A_5^n}{x^{15}} + \ldots\right\} n < 0$$

m \ n	-5	-4	-3	-2
0	1	1	1	1
1	112	74	44	22
2	10948	5348	2240	744
3	1104936	426160	137368	34328
4	119873040	38107776	9981216	2013872
5	14123851392	3814769952	842363424	143678304
6	1808633829184	424496392768	81167097088	12093296320

m \ n	-1	0	1	2
0	1	1	1	1
1	8	2	4	14
2	172	28	8	0
3	6056	896	280	168
4	297472	43120	12656	5376
5	18818240	2754752	771232	290304
6	1461101824	219097984	59322368	20760768

Table 31 (Concluded)

TABLE OF COEFFICIENTS $A_m^{(n)}$ FOR ASYMPTOTIC EXPANSION OF

$$\hat{q}^{(n)}(-x) = -(-i)^n \frac{x^{2n+1/2}}{2^{2n+1/2}} \exp\left[i\left(\frac{x^3}{12} - \frac{\pi}{4}\right)\right]\left\{1 - i\frac{A_1^n}{x^3} - \frac{A_2^n}{x^6} + i\frac{A_3^n}{x^9} + \frac{A_4^n}{x^{12}} - i\frac{A_5^n}{x^{15}} + \ldots\right\} \qquad n > 0$$

$$\hat{q}^{(n)}(-x) = \tilde{q}^{(n)}(-x) - (-i)^n \frac{x^{2n+1/2}}{2^{2n+1/2}} \exp\left[i\left(\frac{x^3}{12} - \frac{\pi}{4}\right)\right]\left\{1 - i\frac{A_1^n}{x^3} - \frac{A_2^n}{x^6} + i\frac{A_3^n}{x^9} + \frac{A_4^n}{x^{12}} - i\frac{A_5^n}{x^{15}} + \ldots\right\} \quad n < 0$$

m \ n	3	4	5
0	1	1	1
1	32	58	92
2	84	532	1808
3	168	336	5656
4	2352	672	0
5	129024	77280	67872
6	8568000	4181184	2171904

$$s_1(-x) = \frac{4\exp\left[i\left(\frac{x^3}{12} - \frac{\pi}{4}\right)\right]}{x^{3/2}}\left\{1 - i\frac{10}{x^3} - \frac{264}{x^6} + i\frac{11000}{x^9} + \frac{622160}{x^3} - i\frac{44359392}{x^{15}} + \cdots\right\}$$

$$s_2(-x) = i\frac{8\exp\left[i\left(\frac{x^3}{12} - \frac{\pi}{4}\right)\right]}{x^{5/2}}\left\{1 - i\frac{18}{x^3} - \frac{600}{x^6} + i\frac{718976}{25x^9} + \frac{8955648}{5x^{12}} + \cdots\right\} \qquad (15.76)$$

Cont.

$$s_3(-x) = -\frac{16\exp\left[i\left(\frac{x^3}{12} - \frac{\pi}{4}\right)\right]}{x^{7/2}}\left\{1 - i\frac{28}{x^3} - \frac{1160}{x^6} + i\frac{1598976}{25x^9} + \frac{22023168}{5x^{12}} + \cdots\right\}$$

$$s_4(-x) = -i\frac{32\exp\left[i\left(\frac{x^3}{12} - \frac{\pi}{4}\right)\right]}{x^{9/2}}\left\{1 - i\frac{40}{x^3} - \frac{2024}{x^6} + i\frac{34228224}{125x^9} + \frac{9740288}{x^{12}} + \cdots\right\}$$

$$s_5(-x) = \frac{64\exp\left[i\left(\frac{x^3}{12} - \frac{\pi}{4}\right)\right]}{x^{11/2}}\left\{1 - i\frac{54}{x^3} - \frac{3284}{x^6} + i\frac{29376512}{125x^9} + \frac{497156096}{25x^{12}} + \cdots\right\}$$

$$s_6(-x) = i\frac{128\exp\left[i\left(\frac{x^3}{12} - \frac{\pi}{4}\right)\right]}{x^{13/2}}\left\{1 - i\frac{70}{x^3} - \frac{5044}{x^6} + \cdots\right\} \qquad (15.76)\ \text{Cont.}$$

We can also write

$$s_0(\xi) = -\frac{1}{2\sqrt{\pi}}\,\xi - q^{(-2)}(\xi) + \xi\, q^{(-1)}(\xi)$$

$$s_1(\xi) = \frac{1}{2\sqrt{\pi}}\,\frac{\xi^3}{6} - \frac{3}{2}\,q^{(-4)}(\xi) + \frac{3}{2}\,\xi\, q^{(-3)}(\xi) - \frac{\xi^2}{2}\,q^{(-2)}(\xi)$$

$$s_2(\xi) = -\frac{1}{2\sqrt{\pi}}\left(\frac{\xi^5}{90} + i\,\frac{\xi^2}{6}\right) - \frac{5}{2}\,q^{(-6)}(\xi) + \frac{5}{2}\,\xi\, q^{(-5)}(\xi) - \xi^2\, q^{(-4)}(\xi) + \left(\frac{\xi^3}{6} - i\,\frac{2}{3}\right)q^{(-3)}(\xi) + \frac{i\xi}{3}\,q^{(-2)}(\xi)$$

$$s_3(\xi) = \frac{1}{2\sqrt{\pi}}\left(\frac{\xi^7}{2520} + i\,\frac{\xi^4}{32}\right) - \frac{35}{8}\,q^{(-8)}(\xi) + \frac{35}{8}\,\xi\, q^{(-7)}(\xi) - \frac{15}{8}\,\xi^2\, q^{(-6)}(\xi)$$
$$+ \left(\frac{5}{12}\,\xi^3 - i\,\frac{7}{3}\right)q^{(-5)}(\xi) - \left(\frac{\xi^4}{24} - i\,\frac{19}{12}\,\xi\right)q^{(-4)}(\xi) - i\,\frac{\xi^2}{3}\,q^{(-3)}(\xi)$$

(15.77)
Cont.

$$s_4(\xi) = -\frac{1}{2\sqrt{\pi}}\left(\frac{\xi^9}{113400} + i\frac{31}{14400}\xi^6 - \frac{\xi^3}{30}\right) - \frac{63}{8}q^{(-10)}(\xi) + \frac{63}{8}\xi\, q^{(-9)}(\xi) - \frac{7}{2}\xi^2 q^{(-8)}(\xi)$$

$$-\left(\frac{7}{8}\xi^3 - i\frac{63}{10}\right)q^{(-7)}(\xi) - \left(\frac{\xi^4}{8} - i\frac{24}{5}\xi\right)q^{(-6)}(\xi)$$

$$+\left(\frac{\xi^5}{120} - i\frac{17}{12}\xi^2\right)q^{(-5)}(\xi) + \left(i\frac{1}{6}\xi^3 + \frac{3}{5}\right)q^{(-4)}(\xi) - \frac{\xi}{5}q^{(-3)}(\xi)$$

$$s_5(\xi) = \frac{1}{2\sqrt{\pi}}\left(\frac{\xi^{11}}{7484400} + i\frac{377}{4838400}\xi^8 - \frac{19}{3600}\xi^5\right) - \frac{231}{16}q^{(-12)}(\xi) + \frac{231}{16}\xi\, q^{(-11)}(\xi)$$

$$-\frac{105}{16}\xi^2 q^{(-10)}(\xi) + \left(\frac{7}{4}\xi^3 - i\frac{77}{5}\right)q^{(-9)}(\xi) - \left(\frac{7}{24}\xi^4 - i\frac{749}{60}\xi\right)q^{(-8)}(\xi)$$

$$+\left(\frac{7}{240}\xi^5 - i\frac{511}{120}\xi^2\right)q^{(-7)}(\xi) - \left(\frac{1}{720}\xi^6 - i\frac{159}{216}\xi^3 - \frac{29}{9}\right)q^{(-6)}(\xi)$$

$$-\left(i\frac{\xi^4}{18} + \frac{5}{3}\xi\right)q^{(-5)}(\xi) + \frac{23}{90}\xi^2 q^{(-4)}(\xi) \qquad (15.77)$$

We observe that the functions $s_n(\xi)$ are entire functions of ξ. However, the functions $q^{(-r)}(\xi)$, where $r > 0$, which are employed in this representation have not yet been defined since $q^{(n)}(\xi)$ is defined only for $n > 0$,

$$q^{(n)}(\xi) = \frac{d^n}{d\xi^n}q(\xi).$$

The functions $q^{(n)}(\xi)$ for $n < 0$ are defined by

$$\hat{q}^{(-10)}(\xi) = -\frac{1}{2\sqrt{\pi}}\left(\frac{\xi^9}{362880}\ \ln|\xi| - \frac{7129}{914457600}\,\xi^9\right) + A(\xi)\,\frac{\xi^9}{9!} + q^{(-10)}(\xi)$$

$$\hat{q}^{(-9)}(\xi) = -\frac{1}{2\sqrt{\pi}}\left(\frac{\xi^8}{40320}\ \ln|\xi| - \frac{2283}{33868800}\,\xi^8\right) + A(\xi)\,\frac{\xi^8}{8!} + q^{(-9)}(\xi)$$

$$\hat{q}^{(-8)}(\xi) = -\frac{1}{2\sqrt{\pi}}\left(\frac{\xi^7}{5040}\ \ln|\xi| - \frac{2178}{4233600}\,\xi^7\right) + A(\xi)\,\frac{\xi^7}{7!} + q^{(-8)}(\xi)$$

$$\hat{q}^{(-7)}(\xi) = -\frac{1}{2\sqrt{\pi}}\left(\frac{\xi^6}{720}\ \ln|\xi| - \frac{294}{86400}\,\xi^6\right) + A(\xi)\,\frac{\xi^6}{6!} + q^{(-7)}(\xi)$$

$$\hat{q}^{(-6)}(\xi) = -\frac{1}{2\sqrt{\pi}}\left(\frac{\xi^5}{120}\ \ln|\xi| - \frac{274}{14400}\,\xi^5\right) + A(\xi)\,\frac{\xi^5}{5!} + q^{(-6)}(\xi)$$

$$\hat{q}^{(-5)}(\xi) = -\frac{1}{2\sqrt{\pi}}\left(\frac{\xi^4}{24}\ \ln|\xi| - \frac{25}{288}\,\xi^4\right) + A(\xi)\,\frac{\xi^4}{4!} + q^{(-5)}(\xi)$$

$$\hat{q}^{(-4)}(\xi) = -\frac{1}{2\sqrt{\pi}}\left(\frac{\xi^3}{6}\ \ln|\xi| - \frac{11}{36}\,\xi^3\right) + A(\xi)\,\frac{\xi^3}{3!} + q^{(-4)}(\xi)$$

$$\hat{q}^{(-3)}(\xi) = -\frac{1}{2\sqrt{\pi}}\left(\frac{\xi^2}{2}\ \ln|\xi| - \frac{3}{4}\,\xi^2\right) + A(\xi)\,\frac{\xi^2}{2!} + q^{(-3)}(\xi)$$

$$\hat{q}^{(-2)}(\xi) = -\frac{1}{2\sqrt{\pi}}\,(\xi\ \ln|\xi| - \xi) + A(\xi)\,\xi + q^{(-2)}(\xi)$$

$$\hat{q}^{(-1)}(\xi) = -\frac{1}{2\sqrt{\pi}}\ \ln|\xi| + A(\xi) + q^{(-1)}(\xi)$$

$$\hat{q}^{(0)}(\xi) = -\frac{1}{2\sqrt{\pi}}\ \frac{1}{\xi} + q^{(0)}(\xi) \qquad (15.78)$$

The function $A(\xi)$ is defined by

$$A(\xi) = \begin{cases} 0 & \xi > 0 \\ -i\dfrac{\sqrt{\pi}}{2} & \xi < 0 \end{cases} \tag{15.79}$$

The function $A(\xi)$ serves to define the appropriate branch of the multivalued function $\ln \xi$ which we have written in the form

$$\ln \xi = \begin{cases} \ln(\xi) & \xi > 0 \\ \ln(-\xi) + i\pi & \xi < 0 \end{cases}$$

or

$$-\frac{1}{2\sqrt{\pi}} \ln \xi = -\frac{1}{2\sqrt{\pi}} \ln|\xi| + A(\xi).$$

The constants

$$q^{(-r)}(0) = a_{-r} + i b_{-r} \quad r = 2, 3, 4, 5, \cdots$$

are defined by the convergent series

$$q^{(-r)}(0) = -\frac{\exp\left[-i(5r+1)\frac{\pi}{6}\right]}{2\sqrt{\pi}} \sum_{s=1}^{\infty} \frac{1}{\beta_s^{r+1}\,[Ai(-\beta_s)]^2} \tag{15.80}$$

The case $r = 1$ requires special attention. In this case we find that

$$q^{(-1)}(0) = a_{-1} + i b_{-1} = -\frac{1}{2\sqrt{\pi}}\left(\sum_{s=1}^{\infty} - \int_1^{\infty} ds\right) \frac{1}{\beta_s^2 [Ai(-\beta_s)]^2} - \left(\frac{\gamma + \ln \beta_1}{2\sqrt{\pi}}\right) + i\frac{\sqrt{\pi}}{12} \tag{15.81}$$

where $\gamma = 0.57721\ 56649$ denotes Euler's constant. The operation

$$\left(\sum_{s=1}^{\infty} - \int_{1}^{\infty} ds\right) f(s)$$

is to be interpreted in the sense of the Euler-Maclaurin summation formula, i.e.,

$$\left(\sum_{s=1}^{\infty} - \int_{1}^{\infty} ds\right) f(s) = \frac{1}{2} f(1) - \frac{1}{12} \Delta f(1) + \frac{1}{24} \Delta^2 f(1) + \cdots$$

It is important to observe when constructing $s_n(\xi)$ from $\hat{q}^{(-r)}(\xi)$ that the portions involving the multivalued function $\ln \xi$ vanish.

The functions

$$\hat{q}^{(-r)}(\xi) = \frac{1}{\sqrt{\pi}} \int_{\Gamma_+} \frac{1}{(it)^r} \exp(i\xi t) \frac{v'(t)}{w_1'(t)} dt = -2\sqrt{\pi} i \sum_{s=1}^{\infty} \frac{\exp(i\xi t_s^o)}{(it_s^o)^r t_s^o w_1^2(t_s^o)} \tag{15.82}$$

are defined by a contour Γ_+ running from $-\infty$ to ∞ in upper half plane. In order to obtain the asymptotic expansion for $\xi \to -\infty$ the contour must start at infinity in the sector $\pi > \arg t > \frac{\pi}{3}$ and return to infinity along the ray $\arg t = -\frac{\pi}{3}$. Therefore, the function defined by the asymptotic expansion for the case $r \geq 1$ represents the sum of $\hat{q}^{(-r)}(\xi)$ and the residue contribution

$$\tilde{q}^{(-r)}(\xi) = \frac{1}{\sqrt{\pi}} \int_{c} \frac{1}{(it)^r} \exp(i\xi t) \frac{v'(t)}{w_1'(t)} dt \tag{15.83}$$

where c is a contour which encircles the origin in a counterclockwise direction. If we let

$$\tilde{q}^{(-r)}(\xi) = \sum_{m=o}^{\infty} (\tilde{a}_{m-r} + i\tilde{b}_{m-r}) \frac{\xi^m}{m!}$$

we can show that

$$\tilde{a}_n + i\tilde{b}_n = 0 , \qquad n \geq 0$$

$$\tilde{a}_{-1} + i\,\tilde{b}_{-1} = \sqrt{\pi}\,\exp\left(i\,\frac{\pi}{6}\right)$$

$$\tilde{a}_{-2} + i\,\tilde{b}_{-2} = 0$$

$$\tilde{a}_{-3} + i\,\tilde{b}_{-3} = -\sqrt{\pi}\,\frac{1}{[w_1'(0)]^2}$$

$$\tilde{a}_{-4} + i\,\tilde{b}_{-4} = 0$$

$$\tilde{a}_{-5} + i\,\tilde{b}_{-5} = -\frac{\sqrt{\pi}}{2}\,\frac{w_1(0)}{[w_1'(0)]^2}$$

$$\tilde{a}_{-6} + i\,\tilde{b}_{-6} = i\,\frac{4\sqrt{\pi}}{15}\,\frac{1}{[w_1'(0)]^2}$$

$$\tilde{a}_{-7} + i\,\tilde{b}_{-7} = -\frac{\sqrt{\pi}}{4}\,\frac{[w_1(0)]^2}{[w_1'(0)]^4}$$

$$\tilde{a}_{-8} + i\,\tilde{b}_{-8} = i\,\frac{4\sqrt{\pi}}{15}\,\frac{w_1(0)}{[w_1'(0)]^3}$$

$$\tilde{a}_{-9} + i\,\tilde{b}_{-9} = \frac{77\sqrt{\pi}}{1008}\,\frac{1}{[w_1'(0)]^2} - \frac{\sqrt{\pi}}{8}\,\frac{[w_1(0)]^3}{[w_1'(0)]^5}$$

$$\tilde{a}_{-10} + i\,\tilde{b}_{-10} = i\,\frac{\sqrt{\pi}}{5}\,\frac{[w_1(0)]^2}{[w_1'(0)]^4} \tag{15.34}$$

Although the functions $\tilde{q}^{(-r)}(\xi)$ are needed in order to define $\hat{q}^{(-r)}(\xi)$ for $\xi \to -\infty$, it should be observed that in constructing $s_n(\xi)$ from $\hat{q}^{(-r)}(\xi)$ all of the terms involving $\tilde{q}^{(-r)}(\xi)$ vanish.

We can use the coefficients a_n, b_n of Table 27 to express $s_n(\xi)$ in the form

$$s_0(\xi) = \sum_{r=0}^{\infty} (E_r^0 + i\,F_r^0)\,\frac{\xi^r}{r!}$$

$$E_r^0 = (1 - r)\,a_{r-2}$$

$$F_r^0 = (1 - r)\,b_{r-2}$$

$$s_1(\xi) = \sum_{r=0}^{\infty} (E_r^1 + i\,F_r^1)\,\frac{\xi^r}{r!}$$

$$E_r^1 = \frac{(r-3)(r-1)}{2}\,a_{r-4}$$

$$F_r^1 = \frac{(r-3)(r-1)}{2}\,b_{r-4}$$

$$s_2(\xi) = \sum_{r=0}^{\infty} (E_r^2 + i\,F_r^2)\,\frac{\xi^r}{r!}$$

$$E_r^2 = \left[-r^3 + 4r^2 - \frac{11}{2}\,r + \frac{5}{2}\right]a_{r-6} + \frac{r-2}{3}\,b_{r-3}$$

$$F_r^2 = \left[-r^3 + 4r^2 - \frac{11}{2}\,r + \frac{5}{2}\right]b_{r-6} - \frac{r-2}{3}\,a_{r-3}$$

$$s_3(\xi) = \sum_{r=0}^{\infty} (E_r^3 + i\,F_r^3)\,\frac{\xi^r}{r!}$$

$$E_r^3 = \left[\frac{1}{24}\,r^4 - \frac{2}{3}\,r^3 + \frac{43}{12}\,r^2 - \frac{22}{3}\,r + \frac{35}{8}\right]a_{r-8} - \frac{(r-4)(4r-7)}{12}\,b_{r-5}$$

$$F_r^3 = \left[\frac{1}{24}\,r^4 - \frac{2}{3}\,r^3 + \frac{43}{12}\,r^2 - \frac{22}{3}\,r + \frac{35}{8}\right]b_{r-8} + \frac{(r-4)(4r-7)}{12}\,a_{r-5} \qquad (15.65)$$

Cont.

$$s_4(\xi) = \sum_{r=o}^{\infty} \left(E_r^4 + iF_r^4\right) \frac{\xi^r}{r!}$$

$$E_r^4 = \left[-\frac{1}{120} r^5 + \frac{5}{24} r^4 - \frac{23}{12} r^3 + \frac{95}{12} r^2 - \frac{563}{40} r + \frac{63}{8}\right] a_{r-10}$$

$$+\left[\frac{1}{6} r^3 - \frac{23}{12} r^2 + \frac{131}{20} r - \frac{63}{10}\right] b_{r-7} + \frac{r-3}{5} a_{r-4}$$

$$F_r^4 = \left[-\frac{1}{120} r^5 + \frac{5}{24} r^4 - \frac{23}{12} r^3 + \frac{95}{12} r^2 - \frac{563}{40} r + \frac{63}{8}\right] b_{r-10}$$

$$-\left[\frac{1}{6} r^3 - \frac{23}{12} r^2 + \frac{131}{20} r - \frac{63}{10}\right] a_{r-7} + \frac{r-3}{5} b_{r-4}$$

$$s_5(\xi) = \sum_{r=o}^{\infty} \left(E_r^5 + i F_r^5\right) \frac{\xi^r}{r!}$$

$$E_r^5 = \left[\frac{1}{720} r^6 - \frac{1}{20} r^5 + \frac{101}{144} r^4 - \frac{29}{6} r^3 + \frac{12139}{720} r^2 - \frac{1627}{60} r + \frac{231}{16}\right] a_{r-12}$$

$$+\left[-\frac{1}{18} r^4 + \frac{77}{72} r^3 - \frac{637}{90} r^2 + \frac{6677}{360} r - \frac{77}{5}\right] b_{r-9} + \left[-\frac{23}{90} r^2 + \frac{173}{90} r - \frac{29}{9}\right] a_{r-6}$$

$$F_r^5 = \left[\frac{1}{720} r^6 - \frac{1}{20} r^5 + \frac{101}{144} r^4 - \frac{29}{6} r^3 + \frac{12139}{720} r^2 - \frac{1627}{60} r + \frac{231}{16}\right] b_{r-12}$$

$$-\left[-\frac{1}{18} r^4 + \frac{77}{72} r^3 - \frac{637}{90} r^2 + \frac{6677}{360} r - \frac{77}{5}\right] a_{r-9} + \left[-\frac{23}{90} r^2 + \frac{173}{90} r - \frac{29}{9}\right] b_{r-6}$$

$$s_6(\xi) = \sum_{r=o}^{\infty} \left(E_r^6 + i F_r^6\right) \frac{\xi^r}{r!}$$

$$E_r^6 = \left[-\frac{1}{5040} r^7 + \frac{7}{720} r^6 - \frac{139}{720} r^5 + \frac{287}{144} r^4 - \frac{8197}{720} r^3 + \frac{25333}{720} r^2 - \frac{88069}{1680} r\right.$$

$$\left. + \frac{429}{16}\right] a_{r-14} + \left[\frac{1}{72} r^5 - \frac{29}{72} r^4 + \frac{523}{120} r^3 - \frac{7781}{360} r^2 + \frac{17197}{360} r - \frac{143}{4}\right] b_{r-11}$$

$$+\left[\frac{7}{45} r^3 - \frac{131}{60} r^2 + \frac{187}{20} r - \frac{532}{45}\right] a_{r-8} + \left[-\frac{1}{7} r + \frac{4}{7}\right] b_{r-5}$$

$$F_r^6 = \left[-\frac{1}{5040} r^7 + \frac{7}{720} r^6 - \frac{139}{720} r^5 + \frac{287}{144} r^4 - \frac{8197}{720} r^3 + \frac{25333}{720} r^2 - \frac{88069}{1680} r\right.$$

$$\left. + \frac{429}{16}\right] b_{r-14} - \left[\frac{1}{72} r^5 - \frac{29}{72} r^4 + \frac{523}{120} r^3 - \frac{7781}{360} r^2 + \frac{17197}{360} r - \frac{143}{4}\right] a_{r-11}$$

$$\left[\frac{7}{45} r^3 - \frac{131}{60} r^2 + \frac{187}{20} r - \frac{532}{45}\right] b_{r-8} - \left[-\frac{1}{7} r + \frac{4}{7}\right] a_{r-5} \qquad (15.85)$$

Section 16
A HISTORY OF FOCK'S INTEGRAL $V_1(z,q)$ WITH PARTICULAR REFERENCE TO THE ROLE OF THE NOTATION FOR AIRY'S INTEGRAL

The integral

$$V_1(z,q) = \frac{1}{\sqrt{\pi}} \int_{-\infty}^{\infty} \exp(izt) \frac{1}{w_1'(t) - q\,w_1(t)}\, dt \tag{16.1}$$

was introduced by Fock (Ref. 12) in 1945 in a study of the field produced by a vertical electric dipole located on the surface of a sphere having a radius which is very large compared with the wavelength. Fock showed that for the primary field derived from the potential function

$$U_o = \frac{\exp(ikR)}{R}, \quad R = \sqrt{a^2 + r^2 - 2ar\cos\theta},$$

the resulting total field is asymptotically equal to

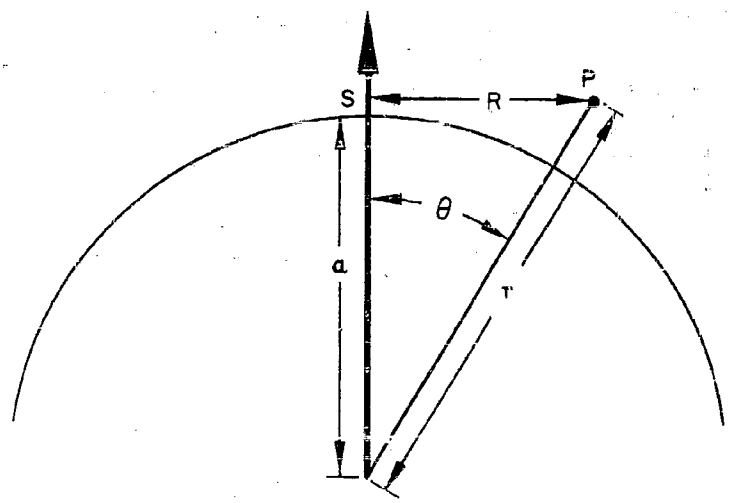

Fig. 18 Dipole on a Spherical Surface

$$U(r,\theta) = \frac{\exp(ika\,\theta)}{a\,\theta} \exp\left(i\,\frac{2}{3}\,y^{3/2}\right) V_1(z,q)$$

where

$$y = \left(\frac{2}{ka}\right)^{1/3} k(r-a)$$

$$z = x - \sqrt{y}$$

$$x = \left(\frac{ka}{2}\right)^{1/3} \theta$$

$$q = i\left(\frac{ka}{2}\right)^{1/3} \frac{k}{k_2} \sqrt{1 - \frac{k^2}{k_2^2}}$$

The function $w_1(t)$ is defined by the integral

$$w_1(t) = \frac{1}{\sqrt{\pi}} \int_{-i\infty}^{\infty} \exp\left(tz - \frac{1}{3}\,z^3\right) dz$$

Fock showed that for $z > 0$ he could compute $V_1(z,q)$ from the residue series representation

$$V_1(z,q) = i\,2\sqrt{\pi} \sum_{s=1}^{\infty} \frac{\exp(i\,z\,t_s)}{(t_s - q^2)\,w_1(t_s)} = -i\,2\sqrt{\pi}\,\frac{1}{q} \sum_{s=1}^{\infty} \frac{\exp(i\,z\,t_s)}{\left(1 - \frac{t_s}{q^2}\right) w_1'(t_s)} \qquad (16.2)$$

where

$$w_1'(t_s) - q\,w_1(t_s) = 0 .$$

For $z > 0$, Fock showed that

$$V_1(z,q) \xrightarrow[z \to -\infty]{} \frac{2\exp\left(-i\,\frac{z^3}{3}\right)}{1 + \frac{iq}{z}} \qquad (16.3)$$

For $z < 0$, and $q = 0$, he noted that

$$V_1(z,0) \xrightarrow[z \to -\infty]{} 2\exp\left(-i\frac{z^3}{3}\right)\left(1 + \frac{i}{4z^3}\right). \tag{16.4}$$

For small values of z, Fock showed that one could write

$$V_1(z,q) = \sum_{n=0}^{\infty} a_n(q)\, z^n \tag{16.5}$$

where

$$a_n(q) = a_n^{(1)}(q)\exp\left(-i\frac{5\pi}{6}\right) + a_n^{(2)}(q)\exp\left(i\frac{n\pi}{2}\right)$$

and

$$a_n^{(1)}(q) = \frac{1}{\Gamma(n+1)}\frac{1}{\sqrt{\pi}}\int_0^{\infty} \frac{t^n}{w_2'(t) - q\, w_2(t)\exp\left(i\frac{2\pi}{3}\right)}\, dt$$

$$a_n^{(2)}(q) = \frac{1}{\Gamma(n+1)}\frac{1}{\sqrt{\pi}}\int_0^{\infty} \frac{t^n}{w_1'(t) - q\, w_1(t)}\, dt \tag{16.6}$$

and

$$w_1(t) = u(t) + i\,v(t), \quad w_2(t) = u(t) - i\,v(t).$$

However, no values of $a_n(q)$ have been published by the Soviets.

In this early work Fock gave a table only for the case of $q = 0$. The function

$$V_1(z,0) = g(z) = \frac{1}{\sqrt{\pi}}\int_{-\infty}^{\infty} \frac{\exp(i\,zt)}{w_1'(t)}\, dt \tag{16.7}$$

was computed for $z = -4.5\,(0.1)\,4.5$ with an accuracy of three decimals.

Fock also showed how $V_1(z,q)$ could be used to describe the field induced by an incident plane wave on and near the surface of a convex body of finite conductivity. In particular, he showed that the tangential magnetic field on the surface of an obstacle with radius of curvature $\underline{a}$ at the shadow boundary is given by the relations

$$H_y = H_y^o \exp(ikx) \exp\left(i \frac{\xi^3}{3}\right) V_1(\xi, q)$$

$$H_x = i\left(\frac{2}{ka}\right)^{1/3} H_z^o \exp(ikx) F(\xi) \qquad (16.8)$$

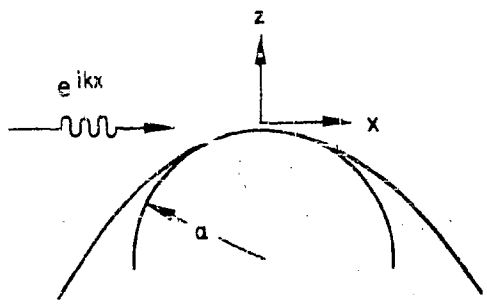

Fig. 19 Plane Wave Incident on a Convex Surface

where

$$\xi = \left(\frac{k}{2a^2}\right)^{1/3} x$$

and

$$F(\xi) = \exp\left(i \frac{\xi^3}{3}\right) \left\{\lim_{q \to \infty} - q V_1(\xi, q)\right\} = \frac{\exp\left(i \frac{\xi^3}{3}\right)}{\sqrt{\pi}} \int_{-\infty}^{\infty} \frac{\exp(i\xi t)}{w_1(t)} dt \qquad (16.9)$$

The asymptotic behavior of $V_1(\xi, q)$ for $\xi \to -\infty$ was obtained by the method of stat' ary phase. This result is identical with the results derived from geometrical optics. The residue series was first introduced by Nicholson and Poincaré in 1910 and placed on a sound mathematical basis by Watson in 1918. The residue series converges only for points in the shadow, i.e., $\xi > 0$. In the vicinity of the shadow boundary neither geometrical optics (stationary phase) nor the diffraction formula (residue series) provides a means of determining the field. Fock's proposal to numerically evaluate the integral representation for $V_1(\xi, q)$ for small values of ξ provided the first satisfactory treatment of the penumbra region (for the case in which one antenna is on the ground and the other is at a very great height). For this outstanding work Fock received the Stalin prize.

The work of Fock was highly publicized by the Soviets. The first four papers were published (in English) in the Journal of Physics in 1945–46. A survey paper entitled "New Methods in Diffraction Theory" appeared in the Philosophical Magazine in 1948. However, it was almost ten years after the publication of Fock's first papers on this subject before other scientists made direct use of Fock's table of $g(\xi)$.

Fock's work has often been criticized by people who have read only the classic paper in which it is shown that for a perfect conductor

$$H_{tan} = H^o_{tan} \exp\left(i\,kx + i\,\frac{\xi^3}{3}\right) g(\xi) \tag{16.10}$$

The criticism is generally made that since only one universal function is introduced – that this is a scalar theory. These persons take the formula to mean that H_{tan} denotes any component of the magnetic field which is tangent to the surface. In his second paper, appearing 269 pages later in the same volume of Journal of Physics, Fock writes the formulas in the form

$$H_y = H^o_y \exp\left(i\,kx + i\,\frac{\xi^3}{3}\right) V_1(\xi, q)$$

$$H_x = H^o_z\left(\frac{2}{ka}\right)^{1/3} H^o_z \exp(i\,kx)\, F(\xi) \tag{16.11}$$

and thereby explicitly shows the dependence on polarization. For a perfect conductor, $q = 0$, and $V_1(\xi, 0) = g(\xi)$ so that

$$H_y = H_y^o \exp\left(ikx + i\frac{\xi^3}{3}\right) g(\xi)$$

$$H_x = H_z^o\left(\frac{2}{ka}\right)^{1/3} \exp\left(ikx + i\frac{\xi^3}{3}\right) f(\xi) \tag{16.12}$$

where

$$g(\xi) = \frac{1}{\sqrt{\pi}} \int_{-\infty}^{\infty} \frac{\exp(i\xi t)}{w_1'(t)} dt \ , \quad f(\xi) = \frac{1}{\sqrt{\pi}} \int_{-\infty}^{\infty} \frac{\exp(i\xi t)}{w_1(t)} dt$$

For positive values of ξ these functions can be computed by means of the residue series representations

$$g(\xi) = 2\sqrt{\pi}\, i \sum_{s=1}^{\infty} \frac{\exp(i\xi t_s^o)}{t_s^o\, w_1(t_s^o)} \ , \quad w_1'(t_s^o) = 0$$

$$f(\xi) = 2\sqrt{\pi}\, i \sum_{s=1}^{\infty} \frac{\exp(i\xi t_s^\infty)}{w_1'(t_s^\infty)} \ , \quad w_1(t_s^\infty) = 0 \tag{16.13}$$

where

$$t_1^o = 1.01879 \exp\left(i\frac{\pi}{3}\right) \qquad t_1^\infty = 2.33811 \exp\left(i\frac{\pi}{3}\right)$$

$$t_2^o = 3.24820 \exp\left(i\frac{\pi}{3}\right) \qquad t_2^\infty = 4.08795 \exp\left(i\frac{\pi}{3}\right)$$

$$t_3^o = 6.16331 \exp\left(i\frac{\pi}{3}\right) \qquad t_3^\infty = 6.78671 \exp\left(i\frac{\pi}{3}\right)$$

$$\vdots \qquad\qquad \vdots$$

Note: The notation t_s^0, t_s^∞ does not agree with the notation of Fock. Fock wrote

$$w_1(t_s^0) = 0 , \qquad w_1'(t_s') = 0$$

so that

$$\underbrace{t_s^0 \Longrightarrow t_s^\infty}_{\text{Fock}}$$

$$\underbrace{t_s' \Longrightarrow t_s^0}_{\text{This paper}} \tag{16.14}$$

We have deliberately changed Fock's notation in order to let the limiting cases of $t_s(q)$, where

$$w_1'[t_s(q)] - q\, w_1[t_s(q)] = 0,$$

be denoted according to

$$t_s(\infty) = t_s^\infty , \qquad t_s(0) = t_s^0 . \tag{16.15}$$

It apparently is not known generally that the importance of the universal functions $f(\xi)$ and $g(\xi)$ had been recognized by two scientists at the Bell Telephone Laboratories prior to the publication of Fock's papers. In 1941, Burrows and Gray (Ref. 37) expressed the field of a vertical electric dipole located above a sphere $r = b$, $\theta = 0$, in the form

$$E(r, \theta) = 2 E_o (2\pi \zeta_a)^{1/2} \sum_{s=0}^{\infty} \frac{\exp\left(-i \tau_s \zeta_a\right)}{\delta + 2\tau_s} f_s(h_1) f_s(h_2) \tag{16.16}$$

where

$$\zeta_a = \left(\frac{2\pi a}{\lambda}\right)^{1/3} \theta$$

$$h_1 = b - a$$

$$h_2 = r - a$$

and τ_s denotes the roots of

$$\frac{\exp i\frac{\pi}{3}\, H^{(2)}_{2/3}\left[\frac{1}{3}(-2\tau_s)^{3/2}\right]}{H^{(2)}_{1/3}\left[\frac{1}{3}(-2\tau_s)^{3/2}\right]} = -\frac{\sqrt{\pi}\exp\left(-i\frac{\pi}{4}\right)}{\sqrt{-2\tau_s}} = \frac{J_{-2/3}(z_s) - J_{2/3}(z_s)}{J_{-1/3}(z_s) + J_{1/3}(z_s)}$$

$$z_s = \frac{1}{3}(-2\tau_s)^{3/2}\exp(-i\pi) \tag{16.17}$$

The height-gain functions are defined by

$$f_s(h) = \sqrt{\frac{x-\tau_s}{-\tau_s}}\;\frac{H^{(2)}_{1/3}\left[\frac{1}{3}(2x-2\tau_s)^{3/2}\right]}{H^{(2)}_{1/3}\left[\frac{1}{3}(-2\tau_s)^{3/2}\right]}$$

$$x_j = \left(\frac{2\pi a}{\lambda}\right)^{2/3}\frac{h_j}{a}, \qquad j = 1, 2, \tag{16.18}$$

The quantity E_o for a vertical electric dipole would be

$$E_o = \frac{\exp(-iR)}{R}, \qquad R = \sqrt{b^2 + r^2 - 2rb\cos\theta}$$

Since $f_s(0) = 1$, if we take $b = a$ (source on the surface) and consider the diffraction region, we can, to a high degree of approximation, write

$$E(r,\theta) = \frac{\exp(-ika\theta)}{a\theta}\, 2\sqrt{2\pi}\,\xi_a \sum_{s=0}^{\infty}\frac{\exp(-i\tau_s\xi_a)}{\delta + 2\tau_s}\, f_s(h_2) \tag{16.19}$$

For great heights, Burrows and Gray observed that

$$f_s(h_2)\xrightarrow[x_2 \gg 1]{} \frac{3}{\sqrt{2\pi}}\,\frac{1}{\sqrt[4]{2x_2}\,\sqrt{-2\tau_s}}\;\frac{\exp(i\sqrt{2x_2}\,\tau_s)}{J_{-1/3}(z_s) + J_{1/3}(z_s)}\;\exp\left[-i\frac{1}{3}(2x_2)^{3/2} + i\frac{7\pi}{12}\right] \tag{16.20}$$

and wrote

$$\zeta_a = \sqrt{2x_o}$$

Then they wrote for the case $h_1 = 0$, $x_2 >> 1$,

$$E(r,\theta) = (E_o)\, 2\sqrt[4]{\frac{2x_o}{2x_2}} \exp\left[-i\frac{1}{3}(2x_2)^{3/2} + i\frac{7\pi}{12}\right] \sum_{s=o}^{\infty} \frac{\exp\left[-i\tau_s\left(\sqrt{2x_o} - \sqrt{2x_2}\right)\right]}{\frac{1}{3}\sqrt{-2\tau_s}\,(\delta + 2\tau_s)\left[J_{-1/3}(z_s) + J_{1/3}(z_s)\right]}$$

$$= (E_o)\, 2\sqrt[4]{\frac{2x_o}{2x_2}} \exp\left[-i\frac{1}{3}(2x_2)^{3/2} + i\frac{\pi}{3}\right] \frac{1}{\sqrt{\delta}} \sum_{s=o}^{\infty} \frac{\exp\left[-i\tau_s\left(\sqrt{2x_o} - \sqrt{2x_2}\right)\right]}{\frac{2}{3}\tau_s\left(1 + \frac{2\tau_s}{\delta}\right)\left[J_{-2/3}(z_s) - J_{2/3}(z_s)\right]} \tag{16.21}$$

Burrows and Gray then presented a set of curves which showed the behavior of these series when $\delta << 1$ and when $\delta >> 1$.

$$F_L \xrightarrow[\delta >> 1]{} \left| \sum_{s=o}^{\infty} \frac{\exp(-i\tau_s^{\infty} L)}{\frac{2}{3}\tau_s^{\infty}\left[J_{-2/3}(z_s^{\infty}) - J_{2/3}(z_s^{\infty})\right]} \right|$$

$$F_L \xrightarrow[\delta << 1]{} \left| \frac{\sqrt{-2\tau_o^o}\,(2\tau_o^o)\left[J_{1/3}(z_o^o) + J_{-1/3}(z_o^o)\right]}{\frac{2}{3}\tau_o^{\infty}\left[J_{-2/3}(z_o^{\infty}) - J_{2/3}(z_o^{\infty})\right]} \sum_{s=o}^{\infty} \frac{\exp(-i\left|\tau_o^{\infty}/\tau_o^o\right|\tau_s^o L)}{\frac{1}{3}\sqrt{-2\tau_s^o}\,(2\tau_s^o)\left[J_{1/3}(z_s^o) + J_{-1/3}(z_s^o)\right]} \right| \tag{16.22}$$

for $L \geq 0$. If we translate these results into Fock's notation we find that

$$F_L \xrightarrow[\delta >> 1]{} \frac{1}{\sqrt[3]{4}} \left| f\left(\frac{L}{\sqrt[3]{2}}\right) \right|$$

$$F_L \xrightarrow[\delta << 1]{} \frac{\left|t_1^o w_1(t_1^o)\right|}{\sqrt[3]{4}\;\left|w_1'(t_1^{\infty})\right|} \left| g\left(\frac{\left|t_o^{\infty}\right|}{\left|t_o^o\right|}\,\frac{L}{\sqrt[3]{2}}\right) \right| \tag{16.23}$$

The difference in notation has so thoroughly concealed the relationship between these results that we now find Fock receiving credit (including the lucrative Stalin prize) for recognizing the value of introducing a class of universal functions which had already been introduced by Burrows and Gray. It is true, of course, that Fock recognized the possibility of using these functions for both positive and negative values of ξ, while Burrows and Gray computed them only for positive values of ξ. However, in Fock's early work he computed only $g(\xi)$, whereas Burrows and Gray considered both $f(\xi)$ and $g(\xi)$.

The translation of notation is most easily carried through by starting from Fock's formulas. Since Burrows and Gray use $\exp(i\omega t)$ time dependence and Fock uses $\exp(-i\omega t)$ time dependence, we must consider the complex conjugates of $f(\xi)$ and $g(\xi)$. The properties

$$w_2(\bar{t}_s^o) = 2\exp\left(-i\frac{\pi}{6}\right)\sqrt{\pi}\,\frac{|\bar{t}_s^o|^{1/2}}{3}\left[J_{1/3}\left(\frac{2}{3}|\bar{t}_s^o|^{3/2}\right) + J_{-1/3}\left(\frac{2}{3}|\bar{t}_s^o|^{3/2}\right)\right]$$

$$w_2'(\bar{t}_s^\infty) = -2\exp\left(i\frac{\pi}{6}\right)\sqrt{\pi}\,\frac{|\bar{t}_s^\infty|}{3}\left[J_{2/3}\left(\frac{2}{3}|\bar{t}_s^\infty|^{3/2}\right) - J_{-2/3}\left(\frac{2}{3}|\bar{t}_s^\infty|^{3/2}\right)\right] \tag{16.24}$$

are used in the relations

$$\bar{g}(\xi) = \frac{1}{\sqrt{\pi}}\int_{-\infty}^{\infty}\frac{\exp(-i\xi t)}{w_2'(t)}\,dt = -2\sqrt{\pi}\,i\sum_{s=1}^{\infty}\frac{\exp(-i\xi\bar{t}_s^o)}{\bar{t}_s^o\,w_2(\bar{t}_s^o)}$$

$$\bar{f}(\xi) = \frac{1}{\sqrt{\pi}}\int_{-\infty}^{\infty}\frac{\exp(-i\xi t)}{w_2(t)}\,dt = -2\sqrt{\pi}\,i\sum_{s=1}^{\infty}\frac{\exp(-i\xi\bar{t}_s^\infty)}{w_2'(\bar{t}_s^\infty)} \tag{16.25}$$

to obtain

$$\bar{g}(\xi) = -3 \sum_{s=1}^{\infty} \frac{\exp(-i\xi \bar{t}_s^{o})}{|\bar{t}_s^{o}|^{3/2}\left[J_{1/3}\left(\frac{2}{3}|\bar{t}_s^{o}|^{3/2}\right) + J_{-1/3}\left(\frac{2}{3}|\bar{t}_s^{o}|^{3/2}\right)\right]}$$

$$\bar{f}(\xi) = -3 \exp\left(i\frac{\pi}{3}\right) \sum_{s=1}^{\infty} \frac{\exp(-i\xi \bar{t}_s^{\infty})}{|\bar{t}_s^{\infty}|\left[J_{2/3}\left(\frac{2}{3}|\bar{t}_s^{\infty}|^{3/2}\right) - J_{-2/3}\left(\frac{2}{3}|\bar{t}_s^{\infty}|^{3/2}\right)\right]} \tag{16.26}$$

By observing that

$$\xi = \left(\frac{ka}{2}\right)^{1/3} \theta = \frac{1}{2^{1/3}} L$$

and

$$\delta \gg 1 , \quad \tau_{s-1} = \frac{1}{\sqrt[3]{2}} |\bar{t}_s^{\infty}| \exp\left(-i\frac{\pi}{3}\right),$$

$$\delta \ll 1 , \quad \tau_{s-1} = \frac{1}{\sqrt[3]{2}} |\bar{t}_s^{o}| \exp\left(-i\frac{\pi}{3}\right),$$

the translation is readily carried out.

The Burrows and Gray function F_L is referred to in a footnote (page 129) of <u>Propagation of Short Radio Waves</u> where it appears in the form

$$F_L = 2^{2/3} \xi^{1/6} \left| \sum_{m=1}^{\infty} \frac{\exp i\zeta_m (x - \sqrt{Z_1})}{h_2'(\zeta_m)} \right| \tag{16.27}$$

where $h_2(\zeta)$ is the modified Hankel function of order 1/3,

$$h_2(\zeta) = \left(\frac{2}{3}\right)^{1/3} \zeta^{1/2} H_{1/3}^{(2)}\left(\frac{2}{3}\zeta^{3/2}\right) \tag{16.28}$$

and

$$h_2'(\zeta) = \left(\frac{2}{3}\right)^{1/3} \zeta \exp\left(-i\frac{2\pi}{3}\right) H_{2/3}^{(2)}\left(\frac{2}{3}\zeta^{3/2}\right)$$

The first few of the roots ζ_m defined by

$$H_{1/3}^{(2)}\left(\frac{2}{3}\zeta_m^{3/2}\right) = 0$$

are

$$\zeta_1 = 2.33811 \exp\left(i\frac{2\pi}{3}\right)$$

$$\zeta_2 = 4.08795 \exp\left(i\frac{2\pi}{3}\right)$$

$$\zeta_3 = 5.52056 \exp\left(i\frac{2\pi}{3}\right)$$

$$\zeta_4 = 6.78671 \exp\left(i\frac{2\pi}{3}\right)$$

This notation is easily related to Fock's function $\bar{f}(\xi)$ since

$$w_2(\bar{t}_s^{\infty}) = \exp\left(-i\frac{2\pi}{3}\right)\sqrt{\frac{\pi}{3}}\left(-\bar{t}_s^{\infty}\right)^{1/2} H_{1/3}^{(2)}\left[\frac{2}{3}\left(-\bar{t}_s^{\infty}\right)^{3/2}\right] = \frac{\pi^{1/2}}{12^{1/6}}\exp\left(-i\frac{2\pi}{3}\right) h_2\left(-\bar{t}_s^{\infty}\right)$$

$$w_2'(\bar{t}_s^{\infty}) = \exp\left(-i\frac{2\pi}{3}\right)\sqrt{\frac{\pi}{3}}\left(-\bar{t}_s^{\infty}\right) H_{2/3}^{(2)}\left[\frac{2}{3}\left(-\bar{t}_s^{\infty}\right)^{3/2}\right] = \frac{\pi^{1/2}}{12^{1/6}}\exp\left(i\frac{\pi}{3}\right) h_2'\left(-\bar{t}_s^{\infty}\right) \quad (16.29)$$

and hence

$$\bar{f}(\xi) = 2\sqrt{\pi}\exp\left(i\frac{\pi}{2}\right)\sum_{s=1}^{\infty}\frac{\exp(-i\xi\bar{t}_s^{\infty})}{\left(\pi^{1/2}/12^{1/6}\right)\exp\left(i\frac{\pi}{3}\right)h_2'(-\bar{t}_s^{\infty})} = 2\sqrt[6]{12}\exp\left(i\frac{\pi}{6}\right)\sum_{s=1}^{\infty}\frac{\exp(i\xi\zeta_s)}{h_2'(\zeta_s)} \quad (16.30)$$

where $\zeta_s = -\bar{t}_s^{\infty}$.

Numerical results for $f(\xi)$ for $\xi < 0$ were first obtained by Pekeris (Ref. 20) at Columbia University. He showed that the field in the vicinity of the horizon, when the transmitter is on the ground and the receiver is elevated to great heights above the ground, is given by

$$\Psi \simeq \frac{\exp\left\{i\left[\omega t - (\pi/3) - kr - \left(2z_2^{3/2}/3\right)\right]\right\}}{\pi (r\bar{r})^{1/2}\, \gamma(\epsilon_1 - 1)^{1/2}} \left(\frac{3\lambda}{2\pi a}\right)^{1/3} G(p) \tag{16.31}$$

where

$$G(p) = \int_0^\infty \frac{\exp\left(-i p x^{2/3}\right)}{x^{2/3}\left[I_{-1/3}(x) + \exp\left(i\frac{\pi}{3}\right) I_{1/3}(x)\right]}\, dx + \exp\left(i\frac{\pi}{3}\right) \int_0^\infty \frac{\exp\left\{\left[(-3^{1/2}/2) + (i/2)\right] p x^{2/3}\right\}}{x^{2/3}\left[I_{1/3}(x) + \exp\left(-i\frac{\pi}{3}\right) I_{1/3}(x)\right]}\, dx \tag{16.32}$$

We will now show that

$$G(p) = \left(\frac{2}{3}\right)^{1/3} \pi \exp\left(-i\frac{\pi}{6}\right) f\left(\left|\frac{2}{3}\right|^{2/3} p\right) \tag{16.33}$$

The translation can be most easily made by writing Fock's $\bar{f}(\xi)$ in the form

$$\bar{f}(\xi) = \frac{1}{\sqrt{\pi}} \int_0^\infty \frac{\exp(-i\xi t)}{w_2(t)}\, dt - \frac{1}{\sqrt{\pi}} \exp\left(-i\frac{\pi}{3}\right) \int_0^\infty \frac{\exp[-\xi t \exp(-i\,\pi/6)]}{w_1(t)}\, dt$$

and then observing that

$$w_2(t) = \frac{2\sqrt{\pi t}}{3} \exp\left(-i\frac{\pi}{6}\right)\left\{I_{-1/3}\left(\frac{2}{3}t^{3/2}\right) + \exp\left(i\frac{\pi}{3}\right) I_{1/3}\left(\frac{2}{3}t^{3/2}\right)\right\}$$

$$w_1(t) = \frac{2\sqrt{\pi t}}{3} \exp\left(i\frac{\pi}{6}\right)\left\{I_{-1/3}\left(\frac{2}{3}t^{3/2}\right) + \exp\left(-i\frac{\pi}{3}\right) I_{1/3}\left(\frac{2}{3}t^{3/2}\right)\right\}$$

$$x = \frac{2}{3} t^{3/2}, \qquad dx = t^{1/2}\, dt = \left(\frac{3}{2}\right)^{1/3} x^{1/3}\, dt \tag{16.34}$$

and hence

$$\overline{f}(\xi) = \frac{1}{\sqrt{\pi}} \left(\frac{2}{3}\right)^{2/3} \frac{3}{2\sqrt{\pi}} \exp\left(i\frac{\pi}{6}\right) \left\{ \int_0^\infty \frac{\exp\left[-i\xi\left(\frac{3}{2}\right)^{2/3} x^{2/3}\right]}{I_{-1/3}(x) + \exp\left(i\frac{\pi}{3}\right) I_{1/3}(x)} \frac{dx}{x^{2/3}} \right.$$

$$\left. + \exp\left(i\frac{\pi}{3}\right) \int_0^\infty \frac{\exp\left[-\xi\left(\frac{3}{2}\right)^{2/3} x^{2/3} \exp\left(-i\frac{\pi}{6}\right)\right]}{I_{-1/3}(x) + \exp\left(-i\frac{\pi}{3}\right) I_{1/3}(x)} \frac{dx}{x^{2/3}} \right\}$$

$$= \left(\frac{3}{2}\right)^{1/3} \frac{1}{\pi} \exp\left(i\frac{\pi}{6}\right) G\left[\left(\frac{3}{2}\right)^{2/3} \xi\right]. \qquad (16.35)$$

Therefore, Fock's form which was suitable for numerical integration was almost simultaneously obtained by Pekeris (who, in addition to not having received the monetary reward of a Stalin prize, has received no credit for his contribution to this field).

In Table 32 we give Pekeris' table for $G(p)$. We have also converted it to $f(\xi)$ by using Eq. (16.35).

Table 32

CONVERSION OF $G(p)$ TO $f(\xi)$

p	ξ	RG	IG	Rf	If
-2.0	-1.53	8.38	-1.63	2.94	-1.01
-1.5	-1.14	5.96	2.89	1.35	-2.00
-1.0	-0.76	3.62	3.24	0.55	-1.68
-0.5	-0.38	2.49	2.22	0.38	-1.16
0	0	1.84	1.16	0.39	-0.67
0.5	0.38	1.24	0.23	0.35	-0.30
1.0	0.76	0.67	0.16	0.24	-0.07
1.5	1.14	0.27	0.23	0.13	0.02
2.0	1.53	0.07	0.16	0.05	0.04

By 1949 the Soviets (Ref. 14) had completed an evaluation of $V_1(z,q)$ for $z > 0$ and for certain values of q of interest in the transmission of radio waves over the surface of a real earth. The amplitude and phase are given for $z = 1.0(0.2)5.0$ and $\alpha = 0.00(0.01)0.03$ where

$$q = \frac{i\,n^{5/6}}{\sqrt{i + \alpha n}} \tag{16.36}$$

and

$$\ln(n) = -0.9\,(0.2)\,2.9\ .$$

It is of interest to note that these calculations were based on using no more than two terms in the Watson residue series. The transition region (for the treatment of which Fock received the Stalin prize) is not included in these tables.

The integrals $\overline{f}(\xi)$ and $\overline{g}(\xi)$ were redefined in 1954 by Rice (Ref. 34). The functions appear in three forms, namely

$$h^{1/3}\,\xi_0\,J\exp\left(i\,x + i\frac{\gamma^3}{3}\right) = \frac{1}{\pi}\int_0^\infty \left[\frac{i^{-2/3}\exp(-i^{1/3}u\gamma)}{Ai(u) - i\,Bi(u)} + \frac{\exp(-iu\gamma)}{Ai(u) + i\,Bi(u)}\right] du$$

$$= \frac{\exp\left(i\frac{\pi}{3}\right)}{2\pi}\int_{\infty\exp\left(i\frac{2\pi}{3}\right)}^{\infty\exp\left(-i\frac{2\pi}{3}\right)} \exp(i^{1/3}\gamma\alpha)\,\frac{d\alpha}{Ai(\alpha)}$$

$$= \exp\left(-i\frac{\pi}{6}\right)\sum_{s=1}^{\infty}\frac{\exp(i^{1/3}\gamma a_s)}{Ai'(a_s)}$$

$$= -i\,\overline{f}(\gamma) \tag{16.37}$$

$$J_v \exp\left(i x + i\frac{\gamma^3}{3}\right) = \frac{1}{\pi}\int_0^\infty \left[-\frac{\exp(-i^{-1/3} u\gamma)}{Ai'(u) - i\,Bi'(u)} + \frac{\exp(-i u\gamma)}{Ai'(u) + i\,Bi'(u)}\right] du$$

$$= \frac{1}{2\pi i}\int_{\infty \exp\left(i\frac{2\pi}{3}\right)}^{\infty \exp\left(-i\frac{2\pi}{3}\right)} \exp(i^{1/3}\gamma\alpha)\,\frac{d\alpha}{Ai'(\alpha)}$$

$$= -\sum_{s=1}^{\infty} \frac{\exp\left(i^{1/3}\gamma a_s'\right)}{a_s' Ai(a_s')}$$

$$= \bar{g}(\gamma) \tag{16.38}$$

The relationship between Rice's functions and Fock's functions is easily obtained since

$$w_2(t) = \sqrt{\pi}\left[Bi(t) - i\,Ai(t)\right], \qquad w_2'(t) = \sqrt{\pi}\left[Bi'(t) - i\,Ai'(t)\right].$$

We observe that

$$\bar{t}_s^{\infty} = |a_s| \exp\left(-i\frac{\pi}{3}\right), \qquad \bar{t}_s^{0} = |a_s'| \exp\left(-i\frac{\pi}{3}\right).$$

The constants a_s, $Ai'(a_s)$, a_s', $Ai(a_s')$ can be found in Miller's table of <u>The Airy Integral</u>.

Fock's integral $\bar{V}_1(z,\bar{q})$ was written in the form

$$g(X) \frac{1}{\sqrt{\pi}}\int_{\Gamma_2} \frac{\exp(-iXt)}{W_1'(t) - q\,W_1(t)}\,dt = \bar{V}_1(X,\bar{q}) \tag{16.39}$$

in a 1958 paper by Wait (Ref. 13). Fock would have written this in the form

$$\bar{V}_1(z,\bar{q}) = \frac{1}{\sqrt{\pi}}\int_{\Gamma_2} \frac{\exp(-izt)}{w_2'(t) - \bar{q}\,w_2(t)}\,dt, \tag{16.40}$$

since

$$\underbrace{W_1(t)}_{\text{Wait}} = \underbrace{w_2(t)}_{\text{Fock}} \tag{16.41}$$

Wait gave a table of $\overline{V}_1(z,\overline{q})$ for $z = -3.0\,(0.5)\,3.0$ and the values of α and n (or rather, $A = \sqrt[6]{1/2\,n^5}$), shown in Table 33. We remark that

$$\overline{q} = \frac{-\,i\,n^{5/6}}{\sqrt{-1+\alpha n}} = 2^{1/6}\,A\,\exp\left(-\,i\,\frac{\pi}{4}\right)\left[1 + i\,\frac{\epsilon\,\omega}{\sigma}\right]^{-1/2} \tag{16.42}$$

$$A = (ka)^{1/3}\left(\frac{\epsilon_o\,\omega}{2\sigma}\right)^{1/2}$$

Table 33

VALUES OF α AND A STUDIED BY WAIT

α \ A	0	0.1	0.2	0.3	0.5	0.7	1.0	1.2	1.5	2	3	5	7	10
0	✓	✓	✓	✓	✓	✓	✓	✓	✓	✓	✓	✓	✓	✓
0.01														✓
0.02														✓
0.03							✓	✓	✓	✓	✓	✓	✓	✓

For $z = 1.0\,(0.5)\,3.0$ these tables overlap Belkina's 1949 tables.

It is interesting to note that Wait has followed Fock's suggestion and has numerically integrated through the transition region. The Soviets have not published any results comparable with those of Wait in the region $-3.0 < z < 1.0$.

It can be expected, as a result of the work of Franz (Ref. 23) in Germany and Keller (Ref. 22) at New York University, that an even different form of Fock's integrals $f(\xi)$ and $g(\xi)$

will be introduced. Let us now show how this can come to pass.

In the work of Franz and Galle in 1955 we find a result of the form

$$\frac{\partial \bar{u}}{\partial n}(a,\phi) = k\,\frac{\exp\left(-i\frac{\pi}{3}\right)}{(ka)^{1/3}} \sum_{\ell=1}^{\infty} \bar{D}_\ell \; \frac{\exp\left[i\bar{\nu}_\ell\left(\phi-\frac{\pi}{2}\right)\right] + \exp\left[i\bar{\nu}_\ell\left(\frac{3\pi}{2}-\phi\right)\right]}{1-\exp(i\,2\pi\,\bar{\nu}_\ell)} \tag{16.43}$$

where

$$\bar{D}_\ell = -\frac{\pi}{3}\,\frac{6^{1/3}}{A'(\bar{q}_\ell)} + O\left([ka]^{-2/3}\right)$$

$$\bar{\nu}_\ell = ka + \left(\frac{ka}{6}\right)^{1/3} \exp\left(i\frac{\pi}{3}\right)\bar{q}_\ell + O\left([ka]^{-1/3}\right).$$

Therefore, if $ka \gg 1$, we take

$$\frac{\partial \bar{u}}{\partial n}(a,\phi) = k\,\frac{\exp\left(-i\frac{\pi}{3}\right)}{(ka)^{1/3}} \sum_{\ell=1}^{\infty} \left(-\frac{\pi}{3}\,\frac{6^{1/3}}{A'(\bar{q}_\ell)}\right) \exp\left[ika\left(\phi-\frac{\pi}{2}\right)\right] \exp\left[i\left(\frac{ka}{6}\right)^{1/3}\exp\left(i\frac{\pi}{3}\right)\bar{q}_\ell\right] \tag{16.44}$$

where $\bar{q}_\ell$ are the roots of $A(\bar{q}_\ell) = 0$ and

$$\bar{q}_1 = 3.372134$$

$$\bar{q}_2 = 5.895843$$

$$\bar{q}_3 = 7.962025$$

$$\bar{q}_4 = 9.788127$$

We can show that

$$q_\ell = -3^{1/3}\,a_\ell$$

where a_ℓ are the roots of

$$Ai(a_\ell) = 0$$

In fact, since

$$Ai(t) = \frac{3^{1/3}}{\pi} A(-3^{1/3} t)$$

we have

$$Ai'(t) = -\frac{3^{2/3}}{\pi} A'(-3^{1/3} t)$$

and hence

$$A'(a_\ell) = -\frac{\pi}{3^{2/3}} Ai'(a_\ell)$$

Therefore, we have

$$\frac{\partial \bar{u}}{\partial n}(a,\phi) = k \frac{\exp\left(-i\frac{\pi}{3}\right)}{(ka)^{1/3}} \exp\left[i\,ka\left(\phi - \frac{\pi}{2}\right)\right] \sum_{s=1}^{\infty} \frac{6^{1/3}}{3^{1/3} Ai'(a_s)} \exp(i\xi\, t_s^o), \quad \xi = \left(\frac{ka}{2}\right)^{1/3}\left(\phi - \frac{\pi}{2}\right)$$

$$= k\left(\frac{2}{ka}\right)^{1/3} \exp\left[i\,ka\left(\phi - \frac{\pi}{2}\right)\right] \left\{\exp\left(-i\frac{\pi}{3}\right) \sum_{s=1}^{\infty} \frac{\exp(i\xi\, t_s^o)}{Ai'(a_s)}\right\}$$

$$= k\left(\frac{2}{ka}\right)^{1/3} \exp\left[i\,ka\left(\phi - \frac{\pi}{2}\right)\right] f(\xi) \tag{16.45}$$

where

$$f(\xi) = \exp\left(-i\frac{\pi}{3}\right) \sum_{s=1}^{\infty} \frac{\exp(i\xi\, t_s^o)}{Ai'(a_s)} = \exp\left(-i\frac{\pi}{3}\right) \sum_{s=1}^{\infty} \frac{\exp\left(\frac{\sqrt{3}-i}{2} a_s \xi\right)}{Ai'(a_s)}$$

is Fock's function.

Franz also has a result of the form

$$u(a,\phi) = \sum_{\ell=1}^{\infty} D_\ell \frac{\exp\left[i\nu_\ell\left(\phi - \frac{\pi}{2}\right)\right] + \exp\left[i\nu_\ell\left(\frac{3\pi}{2} - \phi\right)\right]}{1 - \exp(2\pi i \nu_\ell)} \tag{16.46}$$

where

$$D_\ell = \frac{\pi}{q_\ell A(q_\ell)} + O\left([ka]^{-2/3}\right),$$

$$\nu_\ell = ka + \left(\frac{ka}{6}\right)^{1/3} \exp\left(i\frac{\pi}{3}\right) q_\ell + O\left([ka]^{-1/3}\right)$$

If $ka >> 1$, we take

$$u(a,\phi) \approx \sum_{\ell=1}^{\infty} \frac{\pi}{q_\ell A(q_\ell)} \exp\left\{ika\left(\phi - \frac{\pi}{2}\right) + i\left(\frac{ka}{2}\right)^{1/3}\left[\exp\left(i\frac{\pi}{3}\right)\right] q_\ell \left(\phi - \frac{\pi}{2}\right)\right\} \tag{16.47}$$

We can show that this is equivalent to

$$u(a,\phi) \approx \exp\left[ika\left(\phi - \frac{\pi}{2}\right)\right] g(\xi)$$

$$\xi = \left(\frac{ka}{2}\right)^{1/3}\left(\phi - \frac{\pi}{2}\right) \tag{16.48}$$

where $g(\xi)$ is Fock's integral. The reader will find it interesting to study Section 5 of a recent paper by Klante (Ref. 23), where the constants $f(0)$, $g(0)$ appear in Franz's notation.

Since Keller and Levy have used Franz's notation the above comments on the role of Fock's integral are equally applicable to their work.

The approximations

$$\frac{\partial \bar{u}}{\partial n}(a,\phi) \approx k\left(\frac{2}{ka}\right)^{1/3} \exp\left[i\,ka\left(\phi - \frac{\pi}{2}\right)\right] f(\xi)$$

$$u(a,\phi) \approx \exp\left[i\,ka\left(\phi - \frac{\pi}{2}\right)\right] g(\xi) \tag{16.49}$$

are valid for large values of ka for ϕ greater than about 75°. For ϕ tending to zero we use Fock's 1946 results to write

$$\frac{\partial \bar{u}}{\partial n}(a,\phi) \approx k\left(\frac{2}{ka}\right)^{1/3} \exp(-i\,ka\cos\phi)\exp\left(i\,\frac{\xi_1^3}{3}\right) f(\xi_1)$$

$$u(a\ \phi) \sim \exp(-i\,ka\cos\phi)\exp\left(i\,\frac{\xi_1^3}{3}\right) g(\xi_1) \tag{16.50}$$

where

$$\xi_1 = -\left(\frac{ka}{2}\right)^{1/3}\cos\phi = \left(\frac{ka}{2}\right)^{1/3}\sin\left(\phi - \frac{\pi}{2}\right)$$

These results are useful in the lighted region $0 \leq \phi < \frac{\pi}{2}$ and can be used up to 95° or 100°. Franz has shown that

$$\frac{\partial \bar{u}}{\partial n}(a,\phi) \xrightarrow[ka\to\infty]{} 2ik\cos\phi\,\exp(-i\,ka\cos\phi)\left\{1 + \frac{1}{2ka\cos^3\phi} + \ldots\right\}$$

$$u(a,\phi) \xrightarrow[ka\to\infty]{} 2\exp(-i\,ka\cos\phi)\left\{1 - \frac{1}{2ka\cos^3\phi} + \ldots\right\} \tag{16.51}$$

Also, we know that

$$f(\xi_1) \underset{\xi_1 \to -\infty}{\sim} 2i\xi_1 \exp\left(-i\frac{\xi_1^3}{3}\right)\left(1 - \frac{i}{4\xi_1^3} + \ldots\right)$$

$$g(\xi_1) \underset{\xi_1 \to -\infty}{\sim} 2\exp\left(-i\frac{\xi_1^3}{3}\right)\left(1 + \frac{i}{4\xi_1^3} + \ldots\right) \tag{16.52}$$

Since

$$1 \mp \frac{i}{4\xi_1^3} = 1 \pm \frac{i}{2ka\cos^3\phi}$$

we observe that the choice of definition of ξ_1 is precisely what is required to make these asymptotic expansions agree in their first two terms.

The above summary of instances in which the Fock integrals have been naturally introduced as important universal functions clearly establishes that these functions deserve to take their place in mathematical physics alongside such special functions as the Fresnel integrals. The above study also indicates the need for a more uniform notation not only for the Fock integral but, (and even more important) also for the Airy integral.

Section 17
DERIVATION OF $V_0(\xi, q)$ AND $V_1(\xi, q)$ AS SOLUTIONS OF INTEGRAL EQUATIONS

The integrals

$$V_0(\xi, q) = \frac{\exp\left(-i\frac{\pi}{4}\right)}{2}\sqrt{\frac{\xi}{\pi}}\int_{-\infty}^{\infty} \exp(i\xi t)\,\frac{w_1(t)}{w_1'(t) - q\,w_1(t)}\,dt$$

$$= \frac{\exp\left(-i\frac{\pi}{4}\right)}{2}\sqrt{\frac{\xi}{\pi}}\int_{-\infty}^{\infty} \exp(i\xi t)\,\frac{Bi(t) + i\,Ai(t)}{[Bi'(t) - q\,Bi(t)] + i\,[Ai'(t) - q\,Ai(t)]}\,dt \tag{17.1}$$

$$V_1(\xi, q) = \frac{1}{\sqrt{\pi}}\int_{-\infty}^{\infty} \exp(i\xi t)\,\frac{1}{w_1'(t) - q\,w_1(t)}\,dt$$

$$= \frac{1}{\pi}\int_{-\infty}^{\infty} \exp(i\xi t)\,\frac{1}{[Bi'(t) - q\,Bi(t)] + i\,[Ai'(t) - q\,Ai(t)]}\,dt \tag{17.2}$$

will now be shown to be solutions of the integral equations

$$V_0(\xi, q) = \exp\left(-i\frac{1}{12}\xi^3\right) - \frac{\exp\left(-i\frac{\pi}{4}\right)}{2}\sqrt{\frac{\xi}{\pi}}\int_0^{\xi} V_0(x, q)\exp\left[-i\frac{1}{12}(\xi - x)^3\right]\left\{(\xi - x) - 2iq\right\}\frac{dx}{\sqrt{x(\xi - x)}} \tag{17.3}$$

$$V_1(\xi, q) = 2\exp\left(-i\frac{1}{3}\xi^3\right) - \frac{\exp\left(-i\frac{\pi}{4}\right)}{2\sqrt{\pi}}\int_{-\infty}^{\xi} V_1(x, q)\exp\left[-i\frac{1}{12}(\xi - x)^3\right]\left\{(\xi - x) - 2iq\right\}\frac{dx}{\sqrt{\xi - x}} \tag{17.4}$$

We begin by defining $g(\xi, q)$ and $h(\xi, q)$ by means of

$$g(\xi, q) = V_1(\xi, q) \qquad h(\xi, q) = \frac{\exp\left(-i\frac{\pi}{4}\right)}{\sqrt{\pi\xi}} V_0(\xi, q) \tag{17.5}$$

The resulting integral equations

$$g(\xi, q) = 2\exp\left(-i\frac{1}{3}\xi^3\right) - \frac{1}{2}\frac{\exp\left(-i\frac{\pi}{4}\right)}{2\sqrt{\pi}} \int_{-\infty}^{\xi} g(x, q)) \exp\left[-i\frac{1}{12}(\xi - x)^3\right] \left\{(\xi - x) - 2iq\right\} \frac{dx}{\sqrt{\xi - x}}$$

$$(17.6)$$

$$h(\xi, q) = \frac{\exp\left(-\frac{1}{12}\xi^3 - i\frac{\pi}{4}\right)}{\sqrt{\pi\xi}} - \frac{1}{2}\frac{\exp\left(-i\frac{\pi}{4}\right)}{\sqrt{\pi}} \int_{0}^{\xi} h(x, q) \exp\left[-i\frac{1}{12}(\xi - x)^3\right] \left\{(\xi - x) - 2iq\right\} \frac{dx}{\sqrt{\xi - x}}$$

can be solved by assuming that $g(\xi, q)$ and $h(\xi, q)$ can be expressed in the forms of Fourier integrals

$$g(\xi, q) = \int_{-\infty}^{\infty} \exp(i\xi t)\, G(t, q)\, dt \qquad -\infty < \xi < \infty \tag{17.7}$$

$$h(\xi, q) = \begin{cases} \int_{-\infty}^{\infty} \exp(i\xi t)\, H(t, q)\, dt & \xi > 0 \\ 0 & \xi < 0 \end{cases} \tag{17.8}$$

We also need to define the function

$$k(\xi - x, q) = \begin{cases} 0 & x > \xi \\ \left\{(\xi - x) - 2iq\right\} \dfrac{\exp\left[-i\frac{1}{12}(\xi - x)^3\right]}{\sqrt{\xi - x}} & x < \xi \end{cases} \tag{17.9}$$

$$= \int_{-\infty}^{\infty} \exp[i(\xi - x)t]\, K(t, q)\, dt \tag{17.10}$$

We can then express the integral equations in the forms

$$g(\xi, q) = 2\exp\left(-i\frac{1}{3}\xi^3\right) - \frac{1}{2}\frac{\exp\left(-i\frac{\pi}{4}\right)}{\sqrt{\pi}}\int_{-\infty}^{\infty} g(x, q)\, k(\xi - x, q)\, dx$$

$$h(\xi, q) = \frac{\exp\left(-i\frac{1}{12}\xi^3 - i\frac{\pi}{4}\right)}{\sqrt{\pi}\ \xi} - \frac{1}{2}\frac{\exp\left(-i\frac{\pi}{4}\right)}{\sqrt{\pi}}\int_{-\infty}^{\infty} h(x, q)\, k(\xi - x, q)\, dx \tag{17.11}$$

We can now use the convolution theorem to write

$$\int_{-\infty}^{\infty} g(x, q)\, k(\xi - x, q)\, dx = 2\pi \int_{-\infty}^{\infty} \exp(i\xi t)\, G(t, q)\, K(t, q)\, dt$$

$$\int_{-\infty}^{\infty} h(x, q)\, k(\xi - x, q)\, dx = 2\pi \int_{-\infty}^{\infty} \exp(i\xi t)\, H(t, q)\, K(t, q)\, dt \tag{17.12}$$

and

$$g(\xi, q) - 2\exp\left(-i\frac{1}{3}\xi^3\right) - \sqrt{\pi}\exp\left(-i\frac{\pi}{4}\right)\int_{-\infty}^{\infty} \exp(i\xi t)\, G(t, q)\, K(t, q)\, dt$$

$$= \int_{-\infty}^{\infty} \exp(i\xi t)\, G(t, q)\, dt \qquad \infty < \xi < \infty$$

$$h(\xi, q) = \frac{\exp\left(-i\frac{1}{12}\xi^3 - i\frac{\pi}{4}\right)}{\sqrt{\pi}\ \xi} - \sqrt{\pi}\exp\left(-i\frac{\pi}{4}\right)\int_{-\infty}^{\infty} \exp(i\xi t)\, H(t, q)\, K(t, q)\, dt$$

$$= \int_{-\infty}^{\infty} \exp(i\xi t)\, H(t, q)\, dt \qquad \xi > 0 \tag{17.13}$$

If we now define

$$A(\tau) = \frac{1}{2\pi}\int_{-\infty}^{\infty} \exp(-i\xi\tau)\left\{2\exp\left(-i\frac{1}{3}\xi^3\right)\right\} d\xi$$

$$B(\tau) = \frac{1}{2\pi}\int_{0}^{\infty} \exp(-i\xi\tau)\left\{\frac{\exp\left(-i\frac{1}{12}\xi^3 - i\frac{\pi}{4}\right)}{\sqrt{\pi}\ \xi}\right\} d\xi \tag{17.14}$$

we can use the Fourier inversion theorem to obtain

$$G(\tau, q) = A(\tau) - \sqrt{\pi}\, \exp\left(-i\,\frac{\pi}{4}\right) G(\tau, q)\; K(\tau, q)$$

$$H(\tau, q) = B(\tau) - \sqrt{\pi}\, \exp\left(-i\,\frac{\pi}{4}\right) H(\tau, q)\; K(\tau, q) \qquad (17.15)$$

or

$$G(\tau, q) = \frac{A(\tau)}{1 + \sqrt{\pi}\, \exp\left(-i\,\frac{\pi}{4}\right) K(\tau, q)}$$

$$H(\tau, q) = \frac{B(\tau)}{1 + \sqrt{\pi}\, \exp\left(-i\,\frac{\pi}{4}\right) K(\tau, q)} \qquad (17.16)$$

We must now evaluate $A(\tau)$, $B(\tau)$, and $K(\tau, q)$. We note that

$$A(\tau) = \frac{1}{\pi} \int_{-\infty}^{\infty} \exp\left[-i\left(\xi\,\tau + \frac{1}{3}\,\xi^3\right)\right] d\xi - \frac{2}{\pi} \int_0^{\infty} \cos\left(\xi\,\tau + \frac{1}{3}\,\xi^3\right) d\xi = 2\,\mathrm{Ai}\,(\tau)$$

where $\mathrm{Ai}\,(\tau)$ is the Airy integral.

The integrals

$$B(\tau) = \frac{\exp\left(-i\,\frac{\pi}{4}\right)}{2\,\pi^{3/2}} \int_0^{\infty} \frac{1}{\sqrt{\xi}}\, \exp\left(i\,\xi\,\tau - i\,\frac{1}{12}\,\xi^3\right) d\xi$$

$$K(\tau, q) = \frac{1}{2\pi} \int_0^{\infty} \frac{1}{\sqrt{\xi}}\, \exp\left(-i\,\xi\,\tau - i\,\frac{1}{12}\,\xi^3\right) (\xi - 2\,i\,q)\, d\xi \qquad (17.17)$$

can be expressed in the form

$$B(\tau) = \frac{\exp\left(-i\,\frac{\pi}{4}\right)}{2\,\pi^{3/2}}\, I_1(\tau)$$

$$K(\tau) = \frac{1}{2\pi}\, I_2(\tau) - \frac{i\,q}{\pi}\, I_1(\tau) \qquad (17.18)$$

where

$$I_1(\tau) = \int_0^\infty \frac{1}{\sqrt{\xi}} \exp\left(-i\xi\tau - i\frac{1}{12}\xi^3\right) d\xi$$

$$I_2(\tau) = \int_0^\infty \sqrt{\xi} \exp\left(-i\xi\tau - i\frac{1}{12}\xi^3\right) d\xi = i\frac{d}{d\tau} I_1(\tau) \qquad (17.19)$$

We can show (by integration by parts) that $I_1(\tau)$ and $I_2(\tau)$ are solutions of the differential equations

$$I_1'''(\tau) - 4\tau I_1'(\tau) - 2I_1(\tau) = 0$$

$$I_2'''(\tau) - 4\tau I_2'(\tau) - 6I_2(\tau) = 0$$

Solutions of these equations are of the form

$$I_1(\tau) = C_1 Ai^2(\tau) + C_2 Ai(\tau) Bi(\tau) + C_3 Bi^2(\tau)$$

$$-iI_2(\tau) = 2C_1 Ai(\tau) Ai'(\tau) + C_2[Ai'(\tau) Bi(\tau) + Ai(\tau) Bi'(\tau)] + 2C_3 Bi(\tau) Bi'(\tau)$$

where C_1, C_2, and C_3 are constants. We can show that

$$C_1 = 2\pi^{3/2} \exp\left(i\frac{\pi}{4}\right), \qquad C_2 = 2\pi^{3/2} \exp\left(-i\frac{\pi}{4}\right), \qquad C_3 = 0$$

Therefore

$$I_1(\tau) = 2\pi^{3/2} \exp\left(-i\frac{\pi}{4}\right) Ai(\tau)\left[Bi(\tau) + i\,Ai(\tau)\right]$$

$$I_2(\tau) = 2\pi^{3/2} \exp\left(i\frac{\pi}{4}\right)\left[2\,Ai(\tau)\left[Bi'(\tau) + i\,Ai'(\tau)\right] - \frac{1}{\pi}\right] \qquad (17.20)$$

and hence

$$B(\tau) = \frac{\exp\left(-i\frac{\pi}{4}\right)}{2\pi^{3/2}} I_1(\tau) = \exp\left(-i\frac{\pi}{2}\right) Ai(\tau)\left\{Bi(\tau) + i\,Ai(\tau)\right\}$$

$$K(\tau, q) = \frac{1}{2\pi} I_2(\tau) - \frac{ig}{\pi} I_1(\tau) = \sqrt{\pi}\exp\left(i\frac{\pi}{4}\right)\left\{2\,Ai(\tau)\left[Bi'(\tau) + i\,Ai'(\tau)\right] - \frac{1}{\pi}\right\}$$

$$-\sqrt{\pi}\exp\left(i\frac{\pi}{4}\right) q\; Ai(\tau)\left[Bi(\tau) + i\,Ai(\tau)\right]$$

and

$$1 + \sqrt{\pi}\exp\left(-i\frac{\pi}{4}\right)K(\tau, q) = 2\pi\,Ai(\tau)\left\{\left[Bi'(\tau) + i\,Ai'(\tau)\right] - q\left[Bi(\tau) + i\,Ai(\tau)\right]\right\} \tag{17.21}$$

Therefore, we find that

$$G(\tau, q) = \frac{A(\tau)}{1 + \sqrt{\pi}\exp\left(-i\frac{\pi}{4}\right)K(\tau, q)} = \frac{1}{\pi}\,\frac{1}{\left[Bi'(\tau) + i\,Ai'(\tau)\right] - q\left[Bi(\tau) + i\,Ai(\tau)\right]}$$

$$H(\tau, q) = \frac{B(\tau)}{1 + \sqrt{\pi}\exp\left(-i\frac{\pi}{4}\right)K(\tau, q)} = \frac{1}{2\pi i}\,\frac{Bi(\tau) + i\,Ai(\tau)}{\left[Bi'(\tau) + i\,Ai'(\tau)\right] - q\left[Bi(\tau) + i\,Ai(\tau)\right]} \tag{17.22}$$

Since

$$V_1(\xi, q) = g(\xi, q) = \int_{-\infty}^{\infty} \exp(i\xi t)\; G(t, q)\, dt$$

$$V_0(\xi, q) = \sqrt{\pi}\,\xi\,\exp\left(i\frac{\pi}{4}\right)h(\xi, q) = \sqrt{\pi}\,\xi\,\exp\left(i\frac{\pi}{4}\right)\int_{-\infty}^{\infty} \exp(i\xi t)\, H(t, q)\, dt$$

it follows that

$$V_1(\xi, q) = \frac{1}{\pi} \int_{-\infty}^{\infty} \exp(i\xi t) \frac{1}{[Bi'(t) + i\,Ai'(t)] - q\,[Bi(t) + i\,Ai(t)]}\, dt$$

$$V_0(\xi, q) = \frac{\exp\left(-i\,\frac{\pi}{4}\right)}{2} \sqrt{\frac{\xi}{\pi}} \int_{-\infty}^{\infty} \exp(i\xi t) \frac{Bi(t) + i\,Ai(t)}{[Bi'(t) + i\,Ai'(t)] - q\,[Bi(t) + i\,Ai(t)]}\, dt$$

This is the result we set out to prove.

The proof of the relation

$$I_1(\tau) = 2\pi^{3/2} \exp\left(-i\,\frac{\pi}{4}\right) Ai(\tau)\,[Bi(\tau) + i\,Ai(\tau)]$$

used above contains some interesting analysis. Therefore, we take this opportunity to set forth the details of this demonstration.

The integral

$$I_1(\tau) = \int_0^{\infty} \frac{1}{\sqrt{\xi}} \exp\left(-i\,\xi\,\tau - i\,\frac{1}{12}\,\xi^3\right) d\xi$$

is a solution of the differential equation

$$I_1'''(\tau) - 4\tau\, I_1'(\tau) - 2\, I_1(\tau) = 0$$

This can be proven readily by observing that

$$I_1'''(\tau) - 4\tau I_1'(\tau) = -4\int_0^\infty \sqrt{\xi}\,\exp\left(-i\xi\tau - i\frac{1}{12}\xi^3\right)\left\{-i\tau - i\frac{1}{4}\xi^2\right\}d\xi$$

$$= -4\int_0^\infty \sqrt{\xi}\,\exp\left(-i\xi\tau - i\frac{1}{12}\xi^3\right)\frac{d}{d\xi}\left(-i\xi\tau - i\frac{1}{12}\xi^3\right)d\xi$$

$$= -4\sqrt{\xi}\,\exp\left(-i\xi\tau - i\frac{1}{12}\xi^3\right)\Bigg|_0^\infty + 2\int_0^\infty \frac{1}{\sqrt{\xi}}\exp\left(-i\xi\tau - i\frac{1}{12}\xi^3\right)d\xi$$

$$= 2\,I_1(\tau)$$

In the introduction to the table The Airy Integral, Miller has shown that the complete solution of

$$z'''(x) - 4x\,z'(x) - 2z(x) = 0$$

is

$$z(x) = C_1\,Ai^2(x) + C_2\,Ai(x)\,Bi(x) + C_3\,Bi^2(x).$$

Therefore, we express $I_1(\tau)$ in the form

$$I_1(\tau) = C_1\,Ai^2(\tau) + C_2\,Ai(\tau)\,Bi(\tau) + C_3\,Bi^2(\tau).$$

We observe that since

$$Ai''(\tau) = \tau\,Ai(\tau) \qquad Bi''(\tau) = \tau\,Bi(\tau)$$

$$Ai(0) = \frac{1}{\sqrt{3}}Bi(0) = \frac{1}{3^{2/3}\,\Gamma\left(\frac{2}{3}\right)} \qquad -Ai'(0) = \frac{1}{\sqrt{3}}Bi'(0) = \frac{1}{3^{1/3}\,\Gamma\left(\frac{1}{3}\right)}$$

we can show that

$$I_1(0) = C_1 \, Ai^2(0) + C_2 \, Ai(0) \, Bi(0) + C_3 \, Bi^2(0) - \frac{1}{3^{4/3} \Gamma\left(\frac{2}{3}\right) \Gamma\left(\frac{2}{3}\right)} \left\{ C_1 + \sqrt{3} \, C_2 + 3 \, C_3 \right\}$$

$$I_1'(0) = 2 \, C_1 \, Ai(0) \, Ai'(0) + C_2 \left[Ai(0) \, Bi'(0) + Ai'(0) \, Bi(0) \right] + 2 \, C_3 \, Bi(0) \, Bi'(0)$$

$$= \frac{2}{3 \, \Gamma\left(\frac{2}{3}\right) \Gamma\left(\frac{1}{3}\right)} \left\{ - C_1 + 3 \, C_3 \right\}$$

$$I_1''(0) = 2 \, C_1 \, Ai'(0) \, Ai'(0) + 2 \, C_2 \, Ai'(0) \, Bi'(0) + C_3 \, Bi'(0) \, Bi'(0)$$

$$= \frac{2}{3^{2/3} \Gamma\left(\frac{1}{3}\right) \Gamma\left(\frac{1}{3}\right)} \left\{ C_1 - \sqrt{3} \, C_2 + 3 \, C_3 \right\}$$

We also have

$$I_1(0) = \int_0^\infty \frac{1}{\sqrt{\xi}} \exp\left(-i \frac{1}{12} \xi^3\right) d\xi = \frac{1}{3} \sqrt[6]{12} \, \Gamma\left(\frac{1}{6}\right) \exp\left(-i \frac{\pi}{12}\right)$$

$$I_1'(0) = -i \int_0^\infty \sqrt{\xi} \exp\left(-i \frac{1}{12} \xi^3\right) d\xi = \frac{1}{3} \sqrt{12} \, \Gamma\left(\frac{1}{2}\right) \exp\left(-i \frac{3\pi}{4}\right)$$

$$I_1''(0) = -\int_0^\infty \xi^{3/2} \exp\left(-i \frac{1}{12} \xi^3\right) d\xi = -\frac{1}{3} (12)^{5/6} \, \Gamma\left(\frac{5}{6}\right) \exp\left(-i \frac{5\pi}{12}\right)$$

since

$$\int_0^\infty \xi^\lambda \exp\left(-i \frac{1}{12} \xi^3\right) d\xi = \frac{1}{3} (12)^{(\lambda + 1/3)} \exp\left[-i (\lambda + 1) \frac{\pi}{6}\right].$$

If we use the properties

$$\frac{1}{3^{4/3}\,\Gamma\left(\frac{2}{3}\right)\Gamma\left(\frac{2}{3}\right)} = \frac{\Gamma\left(\frac{1}{6}\right)}{(12)^{5/6}\,\pi^{3/2}}$$

$$\frac{1}{3\,\Gamma\left(\frac{2}{3}\right)\Gamma\left(\frac{1}{3}\right)} = \frac{\Gamma\left(\frac{1}{2}\right)}{\sqrt{12}\,\pi^{3/2}}$$

$$\frac{1}{3^{2/3}\,\Gamma\left(\frac{1}{3}\right)\Gamma\left(\frac{1}{3}\right)} = \frac{\Gamma\left(\frac{5}{6}\right)}{(12)^{1/6}\,\pi^{3/2}}$$

to write

$$I_1(0) = \frac{\Gamma\left(\frac{1}{6}\right)}{(12)^{5/6}\,\pi^{3/2}}\left[C_1 + \sqrt{3}\,C_2 + 3\,C_3\right] = \frac{1}{3}\sqrt[6]{12}\,\Gamma\left(\frac{1}{6}\right)\exp\left(-i\,\frac{\pi}{12}\right)$$

$$I_1'(0) = \frac{2\,\Gamma\left(\frac{1}{2}\right)}{\sqrt{12}\,\pi^{3/2}}\left[-C_1 + 3\,C_3\right] = \frac{1}{3}\sqrt{12}\,\Gamma\left(\frac{1}{2}\right)\exp\left(-i\,\frac{3\pi}{4}\right)$$

$$I_1''(0) = \frac{2\,\Gamma\left(\frac{5}{6}\right)}{(12)^{1/6}\,\pi^{3/2}}\left[C_1 - \sqrt{3}\,C_2 + 3\,C_3\right] = -\frac{1}{3}\,(12)^{5/6}\,\Gamma\left(\frac{5}{6}\right)\exp\left(-i\,\frac{5\pi}{12}\right)$$

we find that

$$C_1 = 2\pi^{3/2}\exp\left(i\,\frac{\pi}{4}\right) \qquad C_2 = 2\pi^{3/2}\exp\left(-i\,\frac{\pi}{4}\right) \qquad C_3 = 0$$

Therefore

$$I_1(\tau) = 2\pi^{3/2}\exp\left(-i\,\frac{\pi}{4}\right)\mathrm{Ai}(\tau)\left[\mathrm{Bi}(\tau) + i\,\mathrm{Ai}(\tau)\right]$$

This is the result which was to be proven.

Section 18

SOME APPLICATIONS TO ASYMPTOTIC EXPANSION OF INTEGRALS DESCRIBING RADIATION PATTERNS OF SLOT ANTENNAS

The Fourier series

$$\Phi_1(x,\phi) = \frac{2}{\pi x}\sum_{n=-\infty}^{\infty}\frac{\exp\left[in(\phi-\frac{\pi}{2})\right]}{H_n^{(1)}(x)} \qquad \text{(infinitesimal circumferential slot)}$$

$$\Phi_2(x,\phi) = \frac{2i}{\pi x}\sum_{n=-\infty}^{\infty}\frac{\exp\left[in(\phi-\frac{\pi}{2})\right]}{H_n^{(1)\prime}(x)} \qquad \text{(axial slot)} \qquad (18.1)$$

$$\Phi_3(x,\phi) = \frac{2}{\pi x}\sum_{n=-\infty}^{\infty}\frac{\exp\left[in(\phi-\frac{\pi}{2})\right]}{H_n^{(1)}(x)}\,\frac{\cos\frac{n\pi}{2x}}{1-\frac{n^2}{x^2}} \qquad \text{(half-wave circumferential slot)}$$

play important roles in the study of radiation patterns of slots mounted on circular cylinders. Each of these series are of the form

$$\Phi(x,\phi) = \sum_{n=-\infty}^{\infty} A_n(x)\exp\left[in(\phi-\frac{\pi}{2})\right], \qquad -\pi<\phi<\pi \qquad (18.2)$$

The Poisson summation formula permits us to construct the <u>periodic</u> function $\Phi(x,\phi) = \Phi(x,\phi\pm 2n\pi) = \Phi(x,-\phi)$ from the <u>aperiodic</u> Fourier integral

$$\Psi(x,\phi) = \int_{-\infty}^{\infty} A_n(x)\exp\left[in(\phi-\frac{\pi}{2})\right]dn, \qquad -\infty<\phi<\infty \qquad (18.3)$$

according to the rule

$$\Phi(x,\phi) = \Psi(x,\phi) + \sum_{m=1}^{\infty} \Psi(x, 2m\pi + \phi) + \sum_{m=1}^{\infty} \Psi(x, 2m\pi - \phi) \; , \quad 0 \le \phi < \pi . \qquad (18.4)$$

For $x > 2$, it is known that the terms with $m > 1$ are negligible. The terms in the series can be interpreted, for

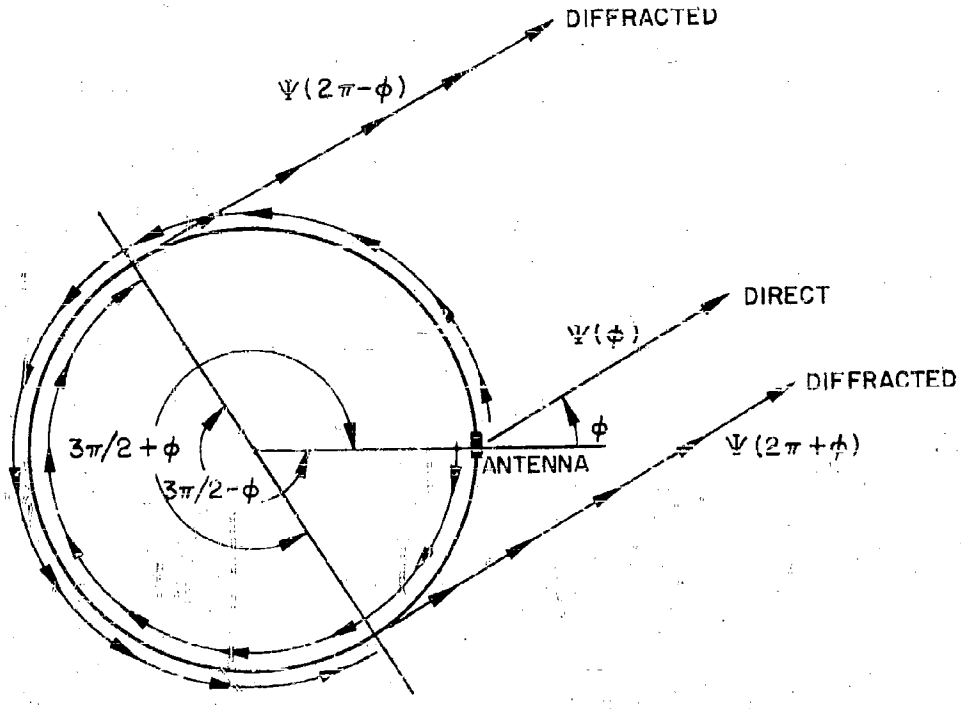

Fig. 20 Direct and Diffracted Waves in Illuminated Region

$-\pi/2 < \phi < \pi/2$, in terms of a direct wave $\Psi(\phi)$ and diffracted waves $\Psi(2m\pi - \phi)$ and $\Psi(2m\pi + \phi)$ which have encircled the cylinder m times. The terms with $m > 1$ are exponentially small, in comparison with the terms for which $m = 1$. These terms are illustrated as rays in Fig. 20. For $|\phi - \pi| < \pi/2$, it is generally sufficient to write

$$\Phi(x,\phi) = \Psi(x,\phi) + \Psi(x, 2\pi - \phi) \qquad (18.5)$$

where $\Psi(x, \phi)$ and $\Psi(x, 2\pi - \phi)$ are the diffracted waves depicted in Fig. 21.

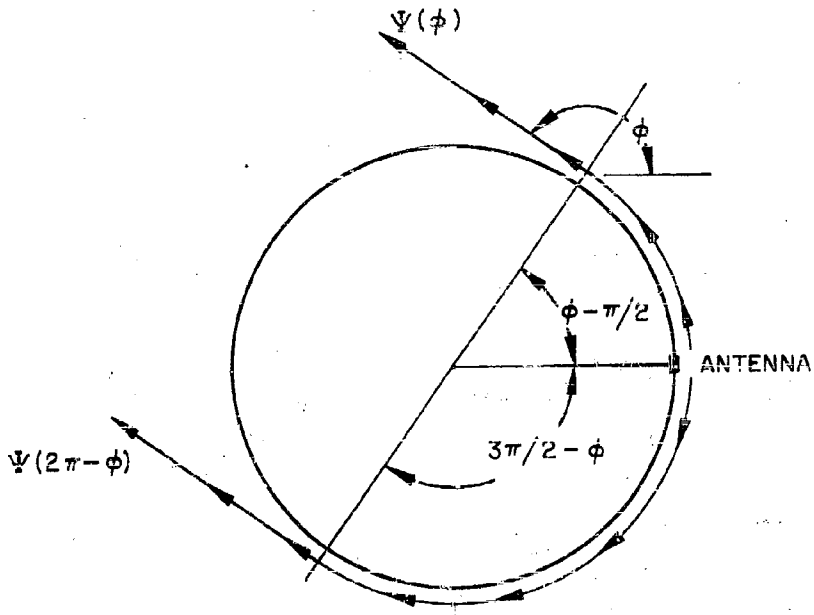

Fig. 21 Diffracted Waves in the shadow region

In the work of Fock, Goriainov and Wait, the asymptotic estimates

$$H_\nu^{(1)}(x) \sim -\frac{1}{\sqrt{\pi}}\left(\frac{2}{x}\right)^{1/3} w_1(t), \qquad H_\nu^{(1)'}(x) \sim \frac{1}{\sqrt{\pi}}\left(\frac{2}{x}\right)^{2/3} w_1'(t) \qquad (18.6)$$

$$t = \left(\frac{2}{x}\right)^{1/3} (\nu - x)$$

$$\xi = \left(\frac{x}{2}\right)^{1/3} \left(\phi - \frac{\pi}{2}\right)$$

have been used to show that

$$\Psi_1(x,\phi) = \frac{2}{\pi x}\int_{-\infty}^{\infty} \frac{\exp\left[i\,n(\phi-\frac{\pi}{2})\right]}{H_n^{(1)}(x)}\,dn \sim i\left(\frac{2}{x}\right)^{1/3} \exp\left[i\,x(\phi-\frac{\pi}{2})\right]\frac{1}{\sqrt{\pi}}\int_{-\infty}^{\infty}\frac{\exp(i\xi t)}{w_1(t)}\,dt$$

$$= i\left(\frac{2}{x}\right)^{1/3} \exp\left[i\,x(\phi-\frac{\pi}{2})\right] f(\xi) \tag{18.7}$$

$$\Psi_2(x,\phi) = \frac{2i}{\pi x}\int_{-\infty}^{\infty} \frac{\exp\left[i\,n(\phi-\frac{\pi}{2})\right]}{H_n^{(1)\prime}(x)}\,dn \sim \exp\left[i\,x(\phi-\frac{\pi}{2})\right]\frac{i}{\sqrt{\pi}}\int_{-\infty}^{\infty}\frac{\exp(i\xi t)}{w_1'(t)}\,dt = \exp\left[i\,x(\phi-\frac{\pi}{2})\right] g(\xi)$$

A similar result can be obtained for $\Psi_3(x,\phi)$ if we write

$$\Psi_3(x,\phi) = \frac{2}{\pi x}\int_{-\infty}^{\infty} \frac{\exp\left[i\,n(\phi-\frac{\pi}{2})\right]}{H_n^{(1)}(x)}\,\frac{\cos\frac{n\pi}{2x}}{1-\frac{n^2}{x^2}}\,dn = \Psi_3^{(+)}(x,\phi) + \Psi_3^{(-)}(x,\phi) \tag{18.8}$$

where

$$\Psi_3^{(+)}(x,\phi) = \frac{i}{\pi x}\int_{-\infty}^{\infty} \frac{\exp\left[i\,n\left(\phi-\frac{\pi}{2}\pm\frac{\pi}{2x}\right)\right]}{H_n^{(1)}(x)\left(1-\frac{n^2}{x^2}\right)}\,dn \sim -\frac{1}{2}\exp\left[i\,x(\phi-\frac{\pi}{2}\pm\frac{\pi}{2x})\right]\frac{1}{\sqrt{\pi}}\int_{-\infty}^{\infty}\frac{1}{(it)}\exp(i\xi_\pm t)\frac{1}{w_1(t)}\,dt$$

$$= \mp\frac{i}{2}\exp\left[i\,x(\phi-\frac{\pi}{2})\right] f^{(-1)}(\xi_\pm) - \xi_\pm\left(\frac{x}{2}\right)^{1/3}(\phi-\frac{\pi}{2}\pm\frac{\pi}{2x})\,. \tag{18.9}$$

We will now show how to obtain asymptotic expansions which have the above results as leading terms. We let

$$\nu = x + \left(\frac{x}{2}\right)^{1/3} t, \quad d\nu = \left(\frac{x}{2}\right)^{1/3} dt$$

and use the asymptotic expansion

$$H_\nu^{(1)}(x) = -\frac{1}{\sqrt{\pi}}\left(\frac{2}{x}\right)^{1/3} w_1(t)\left\{1+\left[\left(\frac{2}{x}\right)^{2/3} a_1 + \left(\frac{2}{x}\right)^{4/3} a_2 + \left(\frac{2}{x}\right)^{6/3} a_3 + \dots\right]\right\}$$

where

$$a_1 = -\left[\frac{1}{15}t + \frac{1}{60}t^2\frac{w_1'(t)}{w(t)}\right]$$

$$a_2 = \left[\left(\frac{1}{7200}t^5 + \frac{13}{1260}t^2\right) + \left(\frac{1}{420}t^3 + \frac{1}{140}\right)\frac{w_1'(t)}{w(t)}\right]$$

$$a_3 = -\left[\left(\frac{283}{9072000}t^6 + \frac{463}{226800}t^3 + \frac{1}{900}\right) + \left(\frac{1}{1296000}t^7 + \frac{13}{32400}t^4 + \frac{19}{6300}t\right)\frac{w_1'(t)}{w(t)}\right] \qquad (18.10)$$

to arrive at

$$\psi_1(x,\phi) = \frac{1}{\pi}\left(\frac{2}{x}\right)^{2/3} \exp\left[ix\left(\phi - \frac{\pi}{2}\right)\right] \int_{-\infty}^{\infty} \exp(i\xi t)\,\frac{1}{H_\nu^{(1)}(x)}\,dt$$

where

$$\frac{1}{H_\nu^{(1)}(x)} = i\sqrt{\pi}\left(\frac{x}{2}\right)^{1/3}\frac{1}{w_1(t)}\left\{1+\left(\frac{2}{x}\right)^{2/3}\left[\frac{1}{15}t+\frac{1}{60}t^2\frac{w_1'(t)}{w_1(t)}\right] - \left(\frac{2}{x}\right)^{4/3}\left[\left(\frac{1}{7200}t^5+\frac{74}{12600}t^2\right)\right.\right.$$

$$\left. + \left(\frac{1}{6300}t^3+\frac{1}{140}\right)\frac{w_1'(t)}{w_1(t)} - \left(\frac{1}{3600}t^4\right)\left(\frac{w_1'(t)}{w_1(t)}\right)^2\right]$$

$$+\left(\frac{2}{x}\right)^{6/3}\left[\left(\frac{115}{9072000}t^6+\frac{1091}{1134000}t^3+\frac{1}{900}\right)\right.$$

$$-\left(\frac{1}{259200}t^7+\frac{43}{1134000}t^4-\frac{13}{6300}t\right)\frac{w_1'(t)}{w_1(t)}$$

$$\left.\left. - \left(\frac{1}{42000}t^5+\frac{1}{4200}t^2\right)\left(\frac{w_1'(t)}{w_1(t)}\right)^2 + \left(\frac{1}{216000}t^6\right)\left(\frac{w_1'(t)}{w_1(t)}\right)^3\right] + \dots\right\} \qquad (18.11)$$

We recall the definition of the functions

$$f_m^{(n)}(\xi) = \frac{1}{\sqrt{\pi}} \int_{-\infty}^{\infty} (it)^n \frac{\exp(i\xi t)}{w_1(t)} \left(\frac{w_1'(t)}{w_1(t)}\right)^m dt$$

Where n can be positive or negative, positive values of n denote differentiation with respect to ξ while negative values denote "integration".

We find that

$$\begin{aligned}
\Psi_1(x, \phi) = i\left(\frac{2}{x}\right)^{1/3} \exp\left[ix(\phi - \tfrac{\pi}{2})\right] \Bigg\{ & f(\xi) + \left(\frac{2}{x}\right)^{2/3} \left[-\frac{1}{15} i f^{(1)}(\xi) - \frac{1}{60} f_1^{(2)}(\xi) \right] \\
& - \left(\frac{2}{x}\right)^{4/3} \left[\frac{-i}{7200} f^{(5)}(\xi) - \frac{74}{12600} f^{(2)}(\xi) + \frac{i}{6300} f^{(3)}(\xi) + \frac{1}{140} f_1(\xi) - \frac{1}{3600} f_2^{(4)}(\xi) \right] \\
& + \left(\frac{2}{x}\right)^{6/3} \left[\frac{-115}{9672000} f^{(6)}(\xi) + \frac{1091\, i}{1134000} f^{(3)}(\xi) + \frac{1}{900} f(\xi) - \frac{i}{259200} f_1^{(7)}(\xi) \right. \\
& - \frac{43}{1134000} f_1^{(4)}(\xi) - \frac{13}{6300} i f_1^{(1)}(\xi) + \frac{i}{42000} f_2^{(5)}(\xi) + \frac{1}{4200} f_2^{(2)}(\xi) \\
& \left. - \frac{1}{21600} f_3^{(6)}(\xi) \right] + \cdots \Bigg\} \qquad (18.12)
\end{aligned}$$

If we now express the $f_m^{(n)}(\xi)$ in terms of $f^{(n)}(\xi)$ by means of the relations

$$f_1(\xi) = 1\xi\, f(\xi)$$

$$f_1^{(1)} = 1\, f(\xi) + 1\xi\, f^{(1)}(\xi)$$

$$f_1^{(2)}(\xi) = 1\xi\, f^{(2)}(\xi) + 2\,1\, f^{(1)}(\xi)$$

$$f_1^{(n)} = 1\xi\, f^{(n)}(\xi) + n\,1\, f^{(n-1)}(\xi)$$

$$f_2(\xi) = \frac{\xi^2}{2} f(\xi) - \frac{1}{2} f^{(1)}(\xi)$$

$$f_2^{(1)}(\xi) = -\xi\, f(\xi) - \frac{\xi^2}{2} f^{(1)}(\xi) - \frac{1}{2} f^{(2)}(\xi)$$

$$f_2^{(2)}(\xi) = -\frac{1}{2} f^{(3)}(\xi) - \frac{1}{2}\xi^2 f^{(2)}(\xi) - 2\xi\, f^{(1)}(\xi) - f(\xi)$$

$$f_2^{(3)}(\xi) = -3 f^{(1)}(\xi) - 3\xi\, f^{(2)}(\xi) - \frac{1}{2}\xi^2 f^{(3)}(\xi) - \frac{1}{2} f^{(4)}(\xi)$$

$$f_2^{(4)}(\xi) = -\frac{1}{2}\xi^2 f^{(4)}(\xi) - 4\xi\, f^{(3)}(\xi) - 6 f^{(2)}(\xi) - \frac{1}{2} f^{(5)}(\xi)$$

$$f_2^{(5)}(\xi) = -\frac{1}{2}\xi^2 f^{(5)}(\xi) - 5\xi\, f^{(4)}(\xi) - 10 f^{(3)}(\xi) - \frac{1}{2} f^{(6)}(\xi)$$

$$f_3(\xi) = \left(\frac{2}{3} - \frac{1}{6}\xi^3\right) f(\xi) + \frac{5}{6}\xi\, f^{(1)}(\xi)$$

$$f_3^{(6)} = \frac{2}{3} f^{(6)}(\xi) - \frac{1}{6}\left[\xi^3 f^{(6)}(\xi) + 18\xi^2 f^{(5)}(\xi) + 90\xi\, f^{(4)}(\xi) + 120 f^{(3)}(\xi)\right] + \frac{5}{6}\left[\xi\, f^{(7)}(\xi) + 6 f^{(6)}(\xi)\right] \qquad (18.13)$$

we find that

$$\Psi_1(x,\phi) = i\left(\frac{2}{x}\right)^{1/3} \exp\left[ix\left(\phi - \frac{\pi}{2}\right)\right]\Bigg\{ f(\xi) + \left(\frac{2}{x}\right)^{2/3}\left[i\left(-\frac{1}{10} f^{(1)}(\xi) - \frac{\xi}{60} f^{(2)}(\xi)\right)\right]$$

$$+ \left(\frac{2}{x}\right)^{4/3}\left[\left(-\frac{1}{7200}\xi^2 f^{(4)}(\xi) - \frac{6}{6300}\xi f^{(3)}(\xi) + \frac{59}{12600} f^{(2)}(\xi) - \frac{1}{140}\xi f(\xi)\right)\right]$$

$$+ \left(\frac{2}{x}\right)^{6/3}\Bigg[\left(-\frac{1}{8400}\xi^2 f^{(2)}(\xi) + \frac{1}{630}\xi f^{(1)}(\xi) + \frac{37}{12600} f(\xi)\right)$$

$$+ i\left(\frac{\xi^3}{1296000} f^{(6)}(\xi) + \frac{1}{504000}\xi^2 f^{(5)}(\xi)\right.$$

$$\left. - \frac{397}{4536000}\xi f^{(4)}(\xi) + \frac{619}{1134000} f^{(3)}(\xi)\right)\Bigg] + \ldots\Bigg\} \quad (18.14)$$

This expansion is primarily useful for $\phi > \frac{\pi}{2}$ or $\xi > 0$. For $\xi \to -\infty$

$$f(\xi) \to 2i\xi \exp\left[-i(\xi^3/3)\right]\left\{1 - \frac{i}{4\xi^3} + \ldots\right\} ;$$

$$-\frac{1}{10} f^{(1)}(\xi) - \frac{\xi}{60} f^{(2)}(\xi) \to \frac{i}{30}\xi^6 \exp\left[-i(\xi^3/3)\right] \quad (18.15)$$

and hence the successive terms in the asymptotic expansion increase in a manner which prohibits the use of the expansion unless

$$\left(\frac{2}{x}\right)^{2/3} \xi^5 << 1$$

or

$$\frac{\pi}{2} - \phi << (2/x)^{1/5}$$

This is the same criterion necessary for

$$-x\cos\phi = x\sin\left(\phi - \frac{\pi}{2}\right) = x\left(\phi - \frac{\pi}{2}\right) - \frac{x}{6}\left(\phi - \frac{\pi}{2}\right)^3 + \frac{x}{120}\left(\phi - \frac{\pi}{2}\right)^5 + \ldots$$

to be represented by the first two terms of the Taylor series.

The mathematical difficulty is related to the fact that physically we know that for $\xi < 0$ we are in the illuminated region and $\Psi_1(ka, \phi)$ should have the property

$$\Psi_1(ka, \phi) \xrightarrow[ka \to \infty]{} 2\cos\phi \exp(-i\, ka \cos\phi) \qquad (18.16)$$
$$|\phi| < \frac{\pi}{2}$$

We can obtain such a result if we define

$$\zeta = \left(\frac{ka}{2}\right)^{1/3} \sin\left(\phi - \frac{\pi}{2}\right) = -\left(\frac{ka}{2}\right)^{1/3} \cos\phi$$

and use the expansions

$$\sin^{-1} x = x + \frac{1}{6}x^3 + \frac{3}{40}x^5 + \frac{5}{112}x^7 + \ldots \qquad (x^2 < 1)$$

$$(\phi - \pi/2) = \left(\frac{2}{ka}\right)^{1/3}\zeta + \frac{1}{6}\left(\frac{2}{ka}\right)\zeta^3 + \frac{3}{40}\left(\frac{2}{ka}\right)^{5/3}\zeta^5 + \frac{5}{112}\left(\frac{2}{ka}\right)^{7/3}\zeta^7 + \ldots$$

$$\frac{\exp[i\nu(\phi - \pi/2)]}{H_\nu^{(1)}(ka)} = \left\{ i\sqrt{\pi}\exp\left\{i\left[ka\sin(\phi - \pi/2) + \frac{1}{3}\zeta^3\right]\right\}\left(\frac{ka}{2}\right)^{1/3}\frac{\exp(i\zeta t)}{w_1(t)}\right\}$$
$$\times\left\{1 + \left(\frac{2}{ka}\right)^{2/3}\left[i\left(\frac{1}{6}\zeta^3 t + \frac{\zeta}{20}\zeta^5\right) + \frac{1}{15}t + \frac{1}{60}t^2\frac{w_1'(t)}{w_1(t)}\right]\right.$$
$$-\left(\frac{2}{ka}\right)^{4/3}\left[\left(\frac{1}{72}\zeta^6 t^2 + \frac{1}{40}\zeta^8 t + \frac{9}{800}\zeta^{10} + \frac{1}{7200}t^5 + \frac{74}{12600}t^2\right)\right.$$
$$-i\left(\frac{1}{90}\zeta^3 t^2 + \frac{17}{200}\zeta^5 t + \frac{5}{56}\zeta^7\right) + \left(\frac{1}{6300}t^3 + \frac{1}{140}\right)\frac{w_1'(t)}{w_1(t)}$$
$$\left.\left.-i\left(\frac{1}{360}\zeta^3 t^3 + \frac{1}{400}\zeta^5 t^2\right)\frac{w_1'(t)}{w_1(t)} - \left(\frac{1}{3600}t^4\right)\left(\frac{w_1'(t)}{w_1(t)}\right)^2\right] + \ldots\right\} \qquad (18.17)$$

We then find that

$$\Psi(ka,\phi) = i\left(\frac{2}{ka}\right)^{1/3} \exp\left\{i\left[ka\sin(\phi - \frac{\pi}{2}) + \frac{1}{3}\zeta^3\right]\right\} \Bigg\{ f(\zeta) + \left(\frac{2}{ka}\right)^{2/3} \Bigg[\left(\frac{\zeta^3}{6} f^{(1)}(\zeta)\right)$$

$$+ i\left(\frac{3}{20}\zeta^5 f(\zeta) - \frac{\zeta}{60} f^{(2)}(\zeta) - \frac{1}{10} f^{(1)}(\zeta)\right)\Bigg]$$

$$- \left(\frac{2}{ka}\right)^{4/3} \Bigg[\left(\frac{9}{800}\zeta^{10} f(\zeta) - \frac{59}{3600}\zeta^6 f^{(2)}(\zeta) - \frac{9}{100}\zeta^5 f^{(1)}(\zeta) + \frac{\zeta^2}{7200} f^{(4)}(\zeta) + \frac{6\zeta}{6300} f^{(3)}(\zeta)$$

$$- \frac{59}{12600} f^{(2)}(\zeta)\right) + i\left(-\frac{1}{40}\zeta^8 f^{(1)}(\zeta) - \frac{5}{56}\zeta^7 f(\zeta) + \frac{\zeta^4}{360} f^{(3)}(\zeta)$$

$$+ \frac{7}{360}\zeta^3 f^{(2)}(\zeta) + \frac{1}{140}\zeta f(\zeta)\right)\Bigg] + \ldots\Bigg\} \tag{18.18}$$

This result is useful for $\zeta \leq 0$. If we use the asymptotic expansions

$$f^{(n)}(\xi) = (-i\xi^2)^n (2i\xi)\exp(-i\xi^3/3)\left\{1 - iA_1^{(n)}/\xi^3 + A_2^{(n)}/\xi^6 + iA_3^{(n)}/\xi^9 - A_4^{(n)}/\xi^{12} + \ldots\right\} \tag{18.19}$$

along with the values of $A_m^{(n)}$ contained in Table 28, we arrive at

$$\Psi(ka,\phi) \underset{\substack{ka\to\infty \\ |\phi| < \frac{\pi}{2}}}{\longrightarrow} \left\{(-2\pi\zeta)\left(\frac{2}{ka}\right)^{1/3} \exp(-ika\cos\phi)\right\} \Bigg\{\left(1 - \frac{i}{4\zeta^3} + \frac{1}{2\zeta^6} + i\frac{175}{64}\frac{1}{\zeta^9} + \ldots\right)$$

$$+ \left(\frac{2}{ka}\right)^{2/3}\left(-\frac{3}{8}\frac{1}{\zeta^4} - \frac{105i}{32}\zeta^{-7} + \ldots\right) + \left(\frac{2}{ka}\right)^{4/3}\left(\frac{3}{4}i\frac{1}{\zeta^5} + \ldots\right) + \ldots\Bigg\} \tag{18.20}$$

If we now observe that

$$\frac{i}{2ka\cos^3\phi} = -\frac{i}{4\zeta^3}\,\frac{1+3(1-\cos^2\phi)}{2(ka)^2\cos^6\phi} = \frac{4-3\zeta^2\left(\frac{2}{ka}\right)^{2/3}}{8\zeta^6}$$

$$= \frac{1}{2\zeta^6} - \frac{3}{8}\left(\frac{2}{ka}\right)^{2/3}\frac{1}{\zeta^4}$$

$$- i\,\frac{13+114(1-\cos^2\phi)+48(1-\cos^2\phi)^2}{64\,\zeta^9} = \frac{175}{64}\,\frac{i}{\zeta^9} - \frac{210\,i}{64\,\zeta^7}\left(\frac{2}{ka}\right)^{2/3} + \frac{48\,i}{64\,\zeta^5}\left(\frac{2}{ka}\right)^{4/3}$$

(18.21)

we find that

$$\Psi(ka,\phi)\xrightarrow[\substack{ka\to\infty\\ |\phi|<\frac{\pi}{2}}]{} 2\cos\phi\,\exp(-ika\cos\phi)\left\{1+\frac{i}{2(ka)\cos^3\phi}+\frac{1+3\sin^2\phi}{2(ka)^2\cos^6\phi}\right.$$

$$\left.-\,i\,\frac{11+114\sin^2\phi+48\sin^4\phi}{8\,(ka)^3\cos^9\phi}+\ldots\right\}$$

(18.22)

This result shows that the choice of ζ as a parameter leads for $ka\to\infty$, $|\phi|<\pi/2$ to the optics result $2\cos\phi\,\exp(-ika\cos\phi)$. Furthermore, instead of an asymptotic <u>estimate</u>, we now have an asymptotic <u>expansion</u>. The terms in $(ka)^{-1}$ and $(ka)^{-2}$ have been previously found by Franz and Galle (Ref. 23) and by Keller, Lewis, and Seckler (Ref. 38). However, this expansion is useless for $|\phi|\to\pi/2$, whereas the expansion involving $f^{(n)}(\zeta)$ is valid at $\phi=\pi/2$. Furthermore, at $\phi=\pi/2$ the expansion ζ is identical with the expansion involving ξ. Therefore, the two expansions complement each other.

In a similar manner we can show that, for $\phi > \pi/2 - (2/ka)^{1/5}$,

$$
\begin{aligned}
\Psi_2(ka,\phi) = \exp\left[i\,ka\left(\phi-\tfrac{\pi}{2}\right)\right]\Bigg\{ & g(\xi) - \left(\frac{2}{ka}\right)^{2/3}\left[\frac{1}{10}\left(g^{(-2)}(\xi) - \xi\, g^{(-1)}(\xi)\right) + i\left(+\frac{\xi}{60}\, g^{(2)}(\xi) - \frac{1}{30}\, g^{(1)}(\xi)\right)\right] \\
& - \left(\frac{2}{ka}\right)^{4/3}\Bigg[\left(\frac{\xi^2}{7200}\, g^{(4)}(\xi) - \frac{2\xi}{1575}\, g^{(3)}(\xi) + \frac{61}{12600}\, g^{(2)}(\xi) - \frac{\xi^2}{200}\, g^{(-2)}(\xi)\right. \\
& \qquad \left. + \frac{3\xi}{200}\, g^{(-3)}(\xi) - \frac{3}{200}\, g^{(-4)}(\xi)\right) \\
& \qquad + i\left(\frac{\xi^2}{600}\, g^{(1)}(\xi) - \frac{\xi}{40}\, g(\xi) - \frac{1}{200}\, g^{(-1)}(\xi)\right)\Bigg] \\
& + \left(\frac{2}{ka}\right)^{6/3}\Bigg[-\left(\frac{\xi^3}{72000}\, g^{(3)}(\xi) - \frac{239}{504000}\,\xi^2\, g^{(2)}(\xi) + \frac{503}{84000}\,\xi\, g^{(1)}(\xi)\right. \\
& \qquad + \frac{2}{175}\, g(\xi) + \frac{\xi^2}{1000}\, g^{(-4)}(\xi) - \frac{\xi}{400}\, g^{(-5)}(\xi) \\
& \qquad \left. \frac{\xi^3\, g^{(-3)}(\xi)}{6000} + \frac{g^{(-6)}(\xi)}{400}\right) \\
& \qquad + i\left(\frac{1}{1296000}\,\xi^3\, g^{(6)}(\xi) - \frac{\xi^2\, g^{(5)}(\xi)}{60480} + \frac{151}{907200}\,\xi\, g^{(4)}(\xi)\right. \\
& \qquad - \frac{1}{12000}\,\xi^3\, g(\xi) + \frac{29}{12000}\,\xi^2\, g^{(-1)}(\xi) - \frac{19}{12000}\,\xi\, g^{(-2)}(\xi) \\
& \qquad \left. - \frac{3}{2000}\, g^{(-3)}(\xi) - \frac{1}{1200}\, g^{(3)}(\xi)\right)\Bigg] + \ldots \Bigg\}
\end{aligned}
\tag{18.23}
$$

and for $\phi < \pi/2 + (2/ka)^{1/5}$

$$\Psi_2(ka,\phi) = \exp\left\{i\left[ka\sin(\phi-\pi/2) + \frac{1}{3}\zeta^3\right]\right\}$$

$$\Bigg\{g(\zeta) + \left(\frac{2}{ka}\right)^{2/3}\Bigg[\left(\frac{1}{6}\zeta^3 g^{(1)}(\zeta) - \frac{1}{10}g^{(-2)}(\zeta) + \frac{\zeta}{10}g^{(-1)}(\zeta)\right)$$

$$+ i\left(\frac{3}{20}\zeta^5 g(\zeta) + \frac{1}{30}g^{(1)}(\zeta) - \frac{1}{60}\zeta\, g^{(2)}(\zeta)\right)\Bigg]$$

$$-\left(\frac{2}{ka}\right)^{4/3}\Bigg[\left(\frac{\zeta^2}{7200}g^{(4)}(\zeta) - \frac{2}{1575}\zeta\, g^{(3)}(\zeta) - \left\langle\frac{59}{3600}\zeta^6 - \frac{244}{50400}\right\rangle g^{(2)}(\zeta) - \frac{7\zeta^5}{100}g^{(1)}(\zeta)\right.$$

$$\left. + \left\langle\frac{9}{800}\zeta^{10} - \frac{\zeta^4}{60}\right\rangle g(\zeta) - \frac{1}{200}\zeta^2 g^{(-2)}(\zeta) + \frac{3\zeta}{200}g^{(-3)}(\zeta) - \frac{3}{200}g^{(-4)}(\zeta)\right)$$

$$+ i\left(\frac{\zeta^4}{360}g^{(3)}(\zeta) - \frac{1}{360}\zeta^3 g^{(2)}(\zeta) - \left\langle\frac{\zeta^8}{40} - \frac{\zeta^2}{600}\right\rangle g^{(1)}(\zeta)\right.$$

$$\left. - \left\langle\frac{5\zeta^7}{56} + \frac{\zeta}{40}\right\rangle g(\zeta) - \left\langle\frac{3}{200}\zeta^6 + \frac{1}{200}\right\rangle g^{(-1)}(\zeta) + \frac{3}{200}\zeta^5 g^{(-2)}(\zeta)\right)\Bigg] + \ldots\Bigg\} \tag{18.24}$$

These two expansions are identical when $\phi = \pi/2$. In the illuminated region, $\zeta \to -\infty$, and we can show that

$$\Psi_2(ka,\phi) \underset{\substack{ka\to\infty \\ |\phi| < \frac{\pi}{2}}}{\longrightarrow} \exp(-ika\cos\phi)\Bigg\{\left(1 + \frac{1}{4}\frac{1}{\zeta^3} - \frac{1}{\zeta^6} - \frac{469}{64}\frac{1}{\zeta^9}\frac{5005}{64}\frac{1}{\zeta^{12}} + \ldots\right)$$

$$+ \left(\frac{2}{ka}\right)^{2/3}\left(\frac{3}{4}\frac{1}{\zeta^4} + \frac{582}{64}\frac{i}{\zeta^7} + \ldots\right)$$

$$+ \left(\frac{2}{ka}\right)^{4/3}\left(-\frac{144}{64}i\frac{1}{\zeta^5} + \ldots\right)\Bigg\} \tag{18.25}$$

or

$$\Psi_2(ka,\phi) \underset{\substack{ka\to\infty \\ |\phi|<\frac{\pi}{2}}}{\longrightarrow} 2\exp(-ika\cos\phi)\left\{1 - \frac{1}{2ka\cos^3\phi} - \frac{1+3\sin^2\phi}{(ka)^2\cos^6\phi}\right.$$

$$+ i\,\frac{31 + 294\sin^2\phi + 144\sin^4\phi}{8\,(ka)^3\cos^9\phi}$$

$$\left. + \frac{185 + 3537\sin^2\phi + 5328\sin^4\phi + 960\sin^6\phi}{8\,(ka)^4\cos^{12}\phi} + \cdots\right.$$

(18.26)

The terms in $(ka)^{-1}$ and $(ka)^{-2}$ agree with those of Franz and Galle (Ref. 23) and Keller, Lewis, and Seckler (Ref. 38). We remark again that this type expansion is useless for $\phi \to \pi/2$, as was also the case with $\Psi_1(ka,\phi)$.

In the case of $\Psi_3^{(+)}(x,\phi)$ we find that for the shadow region

$$\Psi_3^{(+)}(ka,\phi) = \frac{1}{2}\exp\left[ika\left(\phi-\frac{\pi}{2}\right)\right]\left\{i f^{(-1)}(\xi) - \left(\frac{2}{ka}\right)^{2/3}\left(\frac{1}{6}f(\xi) - \frac{1}{60}\xi f^{(1)}(\xi)\right)\right.$$

$$+\left(\frac{2}{ka}\right)^{4/3}\left[\left(\frac{1}{140}f^{(-2)}(\xi) - \frac{\xi}{140}f^{(-1)}(\xi)\right)\right.$$

$$\left. + i\left(-\frac{9}{280}f^{(1)}(\xi) + \frac{11}{3\,50}\xi f^{(2)}(\xi) - \frac{1}{7200}\xi^2 f^{(3)}(\xi)\right)\right]$$

$$+\left(\frac{2}{ka}\right)^{6/3}\left[\left(\frac{913}{129600}f^{(2)}(\xi) - \frac{3073140}{3429216000}\xi f^{(3)}(\xi)\right.\right.$$

$$\left. + \frac{51}{453600}\xi^2 f^{(4)}(\xi) - \frac{1}{1296000}\xi^3 f^{(5)}(\xi)\right)$$

$$\left.\left. + i\left(\frac{1}{900}f^{(-1)}(\xi) - \frac{7\xi}{25200}f(\xi) - \frac{195998}{8228304000}f^{(5)}(\xi)\right)\right] + \cdots\right\}$$

(18.27)

where ξ denotes ξ_+. For the illuminated region, we obtain

$$\Psi_3^{(+)}(ka,\phi) = \mp \frac{1}{2}\exp\left[i\left[ka\sin(\phi - \tfrac{\pi}{2}) + \tfrac{1}{3}\xi^3\right]\right]$$

$$\left\{ i f^{(-1)}(\xi) + \left(\frac{2}{ka}\right)^{2/3}\left[\left(-\frac{1}{6}f(\xi) - \frac{3}{20}\xi^5 f^{(-1)}(\xi) + \frac{\xi}{60}f^{(1)}(\xi)\right) + \frac{1}{6}\xi^3 f(\xi)\right]\right.$$

$$+\left(\frac{2}{ka}\right)^{4/3}\left[\left(-\frac{5}{56}\xi^7 f^{(-1)}(\xi) + \frac{1}{140}\xi f^{(-1)}(\xi) - \frac{1}{140}f^{(-2)}(\xi) - \frac{1}{40}\xi^8 f(\xi)\right.\right.$$

$$\left. - \frac{\xi^3}{40}f^{(1)}(\xi) + \frac{\xi^4}{360}f^{(2)}(\xi)\right)$$

$$+ i\left(-\frac{9}{800}\xi^{10} f^{(-1)}(\xi) + \frac{1}{20}\xi^5 f(\xi) - \frac{9}{280}f^{(1)}(\xi) + \frac{118}{7200}\xi^6 f^{(1)}(\xi) + \frac{11}{3150}\xi f^{(2)}(\xi)\right.$$

$$\left.\left. - \frac{1}{7200}\xi^2 f^{(3)}(\xi)\right)\right] + \ldots \Bigg\} \qquad (18.28)$$

where ξ denotes ξ_+ where

$$\xi_+ = \left(\frac{ka}{2}\right)^{1/3}\sin\left(\phi - \frac{\pi}{2} \pm \frac{\pi}{2ka}\right)$$

If we use the asymptotic expansions for $\xi \to -\infty$, we obtain

$$\Psi_3(ka,\phi) = \left\{ i\left(\frac{ka}{2}\right)^{1/3} 2i\xi^{-1}\right\}\left\{\frac{\exp\left[i\,ka\sin(\phi - \frac{\pi}{2} + \frac{\pi}{2ka})\right] + \exp\left[i\,ka\sin(\phi - \frac{\pi}{2} - \frac{\pi}{2ka})\right]}{2}\right\}$$

$$\times\left\{\left[1 + i\frac{3}{4}\frac{1}{\xi^3} - \frac{5}{2\xi^6} - i\frac{945}{64\xi^9}\right] + \left(\frac{2}{ka}\right)^{2/3}\left[\frac{1}{2}i\xi^{-1} - \frac{1781}{768}\xi^{-4} + \ldots\right]\right.$$

$$\left. + \left(\frac{2}{ka}\right)^{4/3}\left[-\frac{419}{192}\xi^{-2} + \ldots\right] + \ldots\right\} \qquad (18.29)$$

or

$$\Psi_3(ka, \phi) = \left[2\exp(-ika\cos\phi) \; \frac{\cos(\pi/2 \sin\phi)}{\cos\phi} \right] \left\{ 1 + \frac{i\pi^2}{8ka}\cos\phi - i\,\frac{1 + 2\sin^2\phi}{2ka\cos^3\phi} + \ldots \right\} \tag{18.30}$$

The leading term is precisely the result obtained from geometrical optics.

These examples clearly indicate the usefulness of the functions $f^{(n)}(\xi)$ and $g^{(n)}(\xi)$ in the problem of asymptotically expanding these Fourier integrals which describe the radiation properties of slots on a cylindrical surface. The role of the two expansion parameters

$$\xi = \left(\frac{ka}{2}\right)^{1/3} (\phi - \frac{\pi}{2})$$

$$\zeta = \left(\frac{ka}{2}\right)^{1/3} \sin(\phi - \frac{\pi}{2}) = -\left(\frac{ka}{2}\right)^{1/3} \cos\phi$$

is very important. Some critics of Fock's work who have seen the 1946 work involving ξ have remarked that for $\xi > 1$ the approximation becomes very poor. Others, who have recently employed ζ have remarked that the results are very poor for $\zeta < -1$. The effect has been to leave the impression that Fock's universal functions $f(x)$, $g(x)$ are only useful in the penumbra region. Our results above show that with a suitable definition of the argument, the functions $f(x)$, $g(x)$ can be equally useful in the umbra region and in the line-of-sight region.

The confusion attendant to the use of these two arguments has led to such statements as (Ref. 39, p. 94): "Wetzel's formulation differs from Fock's in that he introduces the basic parameter ξ as a function of the arc length along the convex surface, instead as a function of the linear distance along the tangent line at the shadow boundary. There seems to be some reason to believe that Wetzel's definition of ξ is to be preferred." The asymptotic expansions above clearly indicate that each definition is important

since one is useful in the lighted region, the other is good in the umbra, and both are good in the penumbra. Both definitions had been used by Fock as early as 1945, but it was not until the publication of Goriainov's paper (Ref. 14) in 1956 that the advantages of the two different arguments were demonstrated by numerical examples.

The use of different arguments for the lighted region and the umbra is not new since an example can readily be found by expressing results of Nicholson (Ref. 1) and Macdonald (Ref. 2) in the notation of our function $v(\xi)$. Thus, we find that Nicholson gives the magnetic field in the penumbra and on the surface in the form

$$H_\phi \Big|_{r=a} \approx -\frac{ik}{a} \frac{\exp(-ika\theta)}{\sqrt{(\theta/2)\sin(\theta/2)}} \bar{v}\left[(ka/2)^{1/3}\theta\right]$$

whereas Macdonald gives the field for small heights $h \ll r - a$ in the form

$$H_\phi \approx -\frac{ik}{a} \frac{\cos\frac{\theta}{2}}{\sin\frac{\theta}{2}} \exp\left(-i\,2ka\sin\frac{\theta}{2}\right)\Bigg\{\bar{v}\left[2(ka/2)^{1/3}\sin(\theta/2)\right]$$

$$+\, i\,2(ka/2)^{4/3}(h/a)^2\,\bar{v}^{(1)}\left[2(ka/2)^{1/3}\sin(\theta/2)\right]\Bigg\}$$

Macdonald presented a physical argument to substantiate his results by observing that according to geometrical optics he would expect that

$$H_\phi \approx -i\,2k\left(\frac{r\cos\theta}{R^2}\right)\exp(-ikR), \qquad R = \sqrt{a^2 + (a+h)^2 - 2a(a+h)\cos\theta}$$

or for $\theta \to 0$ $h \ll a$,

$$H_\phi \approx -i\frac{2k}{a}\exp\left(-i\,2ka\sin\frac{\theta}{2}\right)\left[1 - i\frac{kh^2}{4a\sin\frac{\theta}{2}} + \ldots\right].$$

Macdonald showed that the functions $\bar{v}(z)$, $\bar{v}^{(1)}(z)$ had the property that

$$\bar{v}(z) \underset{z \to 0}{\longrightarrow} 1 , \qquad \bar{v}^{(1)}(z) \underset{z \to 0}{\longrightarrow} -\frac{i}{2z}$$

and therefore his result was identical with that obtained from geometrical optics. This agreement with the optics result in a strong argument in favor of the use of $[2\,(ka/2)^{1/3} \sin(\theta/2)]$ as the variable in the function $\bar{v}(z)$ when the receiver is in the lighted region.

In the penumbra, on the other hand, Nicholson's form reduces to (cf. Eq. 6-31)

$$H_\phi\Big|_{r=a} \sim -k^2 (ka)^{-5/6} \left(\frac{2\pi}{\sin\theta}\right)^{1/2} \frac{1}{\beta_1} \exp\left[-ika\,\theta - (ka)^{1/3}\beta_1\theta + i\,\frac{3\pi}{4}\right]$$

$$\beta_1 = 0.696\left(1 + i\frac{1}{\sqrt{3}}\right) .$$

This form is also consistent with physical concepts since the factor $(1/\sqrt{\sin\theta})$ shows that the waves follow closely the sphere's curvature, with a divergence in accordance with the area of the sphere over which they spread (the radius of parallel circles being proportional to $\sin\theta$), but while traveling, they continually give off energy at a rate given by the factor $\exp[-0.696\,(ka)^{1/3}\theta]$.

The results given above have all been obtained by expanding asymptotically an exact solution. The results can also be obtained by a perturbation procedure which can be extended to non-circular geometries. For example, if we let

$$\Psi(\rho, \phi) = \exp(i\,ka\,\phi)\Phi(\rho, \phi) = \exp(i\,ka\,\phi)\Big[\Phi_0(\xi, \zeta) + \left(\frac{2}{ka}\right)^{2/3}\Phi_1(\xi, \zeta) + \left(\frac{2}{ka}\right)^{4/3}\Phi_2(\xi, \zeta) + \ldots\Big]$$

where

$$\xi = \left(\frac{ka}{2}\right)^{1/3} \left(\phi - \frac{\pi}{2}\right), \quad \zeta = \left(\frac{ka}{2}\right)^{2/3} \frac{\rho^2 - a^2}{a^2}$$

we can show that if $\Psi(\rho, \phi)$ is a solution of

$$\left[\frac{\partial^2}{\partial\rho^2} + \frac{1}{\rho}\frac{\partial}{\partial\rho} + \frac{1}{\rho^2}\frac{\partial^2}{\partial\phi^2} + k^2\right] \Psi(\rho, \phi) = 0$$

that

$$\frac{\partial^2 \Phi_o}{\partial\zeta^2} + i\frac{\partial \Phi_o}{\partial\xi} + \zeta\,\Phi_o = 0$$

$$\frac{\partial^2 \Phi_1}{\partial\zeta^2} + i\frac{\partial \Phi_1}{\partial\xi} + \zeta\,\Phi_1 = L_1\,\Phi_o$$

$$\frac{\partial^2 \Phi_{n+2}}{\partial\zeta^2} + i\frac{\partial \Phi_{n+2}}{\partial\xi} + \zeta\,\Phi_{n+2} = L_1\,\Phi_{n+1} + L_2\,\Phi_n, \quad n = 0, 1, 2 \ldots$$

where L_1 and L_2 denote the operators

$$L_1 = -\zeta\frac{\partial^2}{\partial\zeta^2} - \frac{\partial}{\partial\zeta} + \zeta^2 + i\zeta\frac{\partial}{\partial\xi} - \frac{1}{4}\frac{\partial^2}{\partial\xi^2}$$

$$L_2 = -\zeta^3 - i\zeta^2\frac{\partial}{\partial\xi} + \frac{1}{4}\zeta\frac{\partial^2}{\partial\xi^2}$$

If we represent the $\Phi_n(\xi, \zeta)$ in the form of Fourier integrals

$$\Phi_n(\xi, \zeta) = \int_{-\infty}^{\infty} \exp(i\xi t)\, F_n(t, t-\zeta)\, dt,$$

we find that the $F_n(t,u)$ are solutions of the inhomogeneous Airy differential equation

$$\frac{d^2 F_n}{du^2} - u F_n = H(u, t)$$

subject to the boundary condition

$$F_n(t,t) = - G(t,o).$$

The solution to this equation can be shown to be

$$F(t, t-\xi) = \frac{1}{2i}\left[w_2(t-\xi) - \frac{w_2(t)}{w_1(t)} w_1(t-\xi)\right] \int_{-\infty}^{t-\xi} w_1(x) H(x,t)\,dx$$

$$+ \frac{1}{2i} w_1(t-\xi) \int_{t-\xi}^{t} \left[w_2(x) - \frac{w_2(t)}{w_1(t)} w_1(x)\right] H(x, t)\,dx - G(t,o) \frac{w_1(t-\xi)}{w_1(t)}$$

where $w_{1,2}(z)$ denote the Airy integrals.

This approach can be readily applied in the case of the elliptic and parabolic cylinders, and in the case of ellipsoids of revolution. Results, obtained by using this approach, will be presented in a Volume IV of this series of reports.

In Volume III, we will present a collection of asymptotic expansions which are obtained in a manner similar to that used above in the case of the radiation patterns for slots on a circular cylinder.

Section 19
REFERENCES

1. J. W. Nicholson, "On the Bending of Electric Waves Round the Earth," Phil. Mag., Vol. 18, 1910, pp. 757–760

   J. W. Nicholson, "On the Bending of Electric Waves Round a Large Sphere," II, Phil. Mag. (Ser. 6), Vol. 20, 1910, pp. 157–172

   J. W. Nicholson, "On the Bending of Electric Waves Round a Large Sphere," III, Phil. Mag. (Ser. 6), Vol. 21, 1911, pp. 62–68

   J. W. Nicholson, "On the Bending of Electric Waves Round a Large Sphere," IV, Phil. Mag., Vol. 21, 1911, pp. 281–295

2. H. M. Macdonald, "The Transmission of Electric Waves Around the Earth's Surface," Proc. Roy. Soc., Vol. 90A, 1914, pp. 50–61

3. G. N. Watson, "The Diffraction of Electric Waves by the Earth," Proc. Roy. Soc., Vol. 95A, 1918, pp. 83–99

4. B. Vvedensky, "Diffraction Propagation of Radio Waves," Part I, Zhur. Tekh. Fiz. U.S.S.R., Vol. 2, 1935, pp. 624–639; Part II, Zhur. Tekh. Fiz. U.S.S.R., Vol. 3, 1936, pp. 915–925

5. B. van der Pol, "On the Propagation of Electromagnetic Waves Round the Earth," Phil. Mag., Vol. 38, 1919, pp. 365–380

6. B. van der Pol and H. Bremmer, "Diffraction of Electromagnetic Waves from an Electrical Point Source Round a Finitely Conducting Sphere with Applications to Radio-Telegraphy and the Theory of the Rainbow," Part I: Phil. Mag., Vol. 24, 1937, pp. 141–176; Part II: Phil. Mag., Vol. 24, 1937, pp. 825–864

   B. van der Pol and H. Bremmer, "Results of a Theory of the Propagation of Electromagnetic Waves Over a Finitely Conducting Sphere," Hochfrequenztech. Elektroak., Vol. 51, 1938, pp. 181–188

6. B. van der Pol and H. Bremmer, "Propagation of Radio Waves Over a Finitely Conducting Spherical Earth," Phil. Mag., Vol. 25, 1938, pp. 817-833

B. van der Pol and H. Bremmer, "Propagation of Radio Waves Over a Finitely Conducting Spherical Earth," Phil. Mag., Vol. 27, 1939, pp. 261-275

B. van der Pol and H. Bremmer, "The Propagation of Wireless Waves Round the Earth," Philips Tech.Rev., Vol. 4, 1939, pp. 246-253

7. H. C. Booker and W. Walkinshaw, "The Mode Theory of Tropospheric Refraction and its Relation to Wave-Guides and Diffraction," Physical Society (Special Report), Meteorological Factors in Radio-Wave Propagation, 1946, pp. 80-127

8. D. E. Kerr, ed., Propagation of Short Radio Waves, New York, McGraw-Hill, 1951

9. Admiralty Signal Establishment, The Limiting Ranges of RDF Sets Over the Sea, by M. H. L. Pryce and F. Hoyle, Report No. M 395, 1941

10. M. H. L. Pryce, "The Diffraction of Radio Waves by the Curvature of the Earth," Advances in Phys., Vol. 2, 1953, pp. 67-95

Admiralty Signal Establishment, Interim Report on Propagation Within and Beyond the Optical Range, by M. H. L. Pryce and C. Domb, Report # M 448, 1942

Admiralty Computing Service, Calculations Involving Airy Integral for Complex Arguments - First Zero, Department of Scientific Research and Experiment, Report No. 21, Mar 1942

Admiralty Computing Service, Calculations Involving Airy Integral for Complex Arguments - Second Zero, Department of Scientific Research and Experiment, Report No. 31, Feb 1944

Admiralty Computing Service, Calculations Involving Airy Integral for Complex Arguments - Third Zero, Department of Scientific Research and Experiment, Report SRE/ACS/39, Apr 1944

Admiralty Computing Service, Calculations Involving Airy Integral for Complex Arguments - Fourth Zero, Department of Scientific Research and Experiment, Report SRE/ACS/46, July 1944

10. Admiralty Computing Service, [illegible] Integral for Complex Arguments—Fifth [illegible] Department of Scientific Research and Experiment, Report SRE/ACS/55, Feb [illegible]

Admiralty Computing Service, Tables of Functions Associated With the Airy Integral, Department of Scientific Research and Experiment, Report SRE/ACS/59, 1 Apr 1944

Admiralty Computing Service, Tables of Functions Associated With the Airy Integral for Complex Arguments, Department of Scientific Research and Experiment, Report SRE/ACS/99, 1 Sept 1945

C. Domb and M. H. L. Pryce, "The Calculation of Field Strengths Over a Spherical Earth," J.I.E.E., Vol. 94, No. 5, Part III, 1947, pp. 325–339

C. Domb, "Tables of Functions Occurring in the Diffraction of Electromagnetic Waves by the Earth," Advances in Physics, Quarterly Supplement of Phil. Mag. Vol. 5, Part 2, No. 5, 1953, pp. 96–102

11. O. Tukizi, "Diffraction Theory of Tropospheric Propagation Near and Beyond the Radio Horizon," Part I and II, IRE Trans. on Antennas and Propagation, Vol. AP-7, July 1959, pp. 261–273

12. V. A. Fock, Tables of the Airy Function, Moscow, 1946

V. A. Fock, "Ground Wave Propagation Around the Earth Taking Diffraction and Refraction into Account," Invest. on Radiowave Propagation, II, pp. 40–68; IAN (Ser. Fiz.), Vol. 12, 1948, pp. 81–97; Izd. A.N., Moscow, 1948

V. A. Fock, "Fresnel Reflection and Diffraction Laws," UFN, Vol. 36, 1948, pp. 308–319

V. A. Fock, "Diffraction of Radio Waves Around the Earth's Surface," J. Phys., Vol. 9, 1945, pp. 255–266; ZETF, Vol. 15, 1945, p. 480; IAN (Ser. Fiz.), Vol. 10, 1946, pp. 187–1[illegible]

V. A. Fock, "Diffraction of Radio Waves Around the Spherical Earth," DAN, Vol. 46, 1945, pp. 310–313

12. V. A. Fock, "The Field of a Plane Wave in the Vicinity of a Conducting Body," IAN (Ser. Fiz.), Vol. 10, 1946, pp. 171–186

V. A. Fock, "On the Propagation and Scattering of Radio Waves," IAN, Vol. 3, 1946, pp. 23–34

V. A. Fock, "The Field of a Plane Wave Near the Surface of a Conducting Body," J. Phys., Vol. 10, 1946, pp. 399–409

V. A. Fock, "The Diffraction of Radio Waves Around the Surface of the Earth," Acad. of Sciences of U.S.S.R., Moscow, 1946

V. A. Fock, "Fresnel Diffraction by Convex Bodies," UFN, Vol. 43, 1951, pp. 587–599

V. A. Fock, "Generalization of Reflection Formulas to the Case of Reflection on an Arbitrary Wave from a Surface of Arbitrary Form," ZETF, Vol. 20, 1950, pp. 961–978

V. A. Fock, "Field of a Vertical and Horizontal Dipole Raised Above the Surface of the Earth," ZETF, Vol. 19, 1949, pp. 916–929

V. A. Fock, "Theory of the Propagation of Radio Waves in a Non-Homogeneous Atmosphere for an Elevated Source," IAN (Ser. Fiz.), Vol. 14, 1950, p. 70–94

V. A. Fock, "The Distribution of Currents induced by a Plane Wave on the Surface of a Conductor," J. Phys., Vol. 10, 1946, pp. 130–136

V. A. Fock, "New Methods in Diffraction Theory," (in English) Phil. Mag., Vol. 39, 1948, pp. 149–155

(Translations of these papers are contained in: V. A. Fock, Diffraction, Refraction and Reflection of Radio Waves, AFCRCTN-57-102, Astia Document AD117276, June 1957)

13. J. R. Wait, Electromagnetic Radiation from Cylindrical Structures, Pergamon Press, New York, 1959

J. R. Wait and A. M. Conda, "Pattern of an Antenna on Curved Lossy Surface," IRE Trans. on Antenna and Propagation, Vol. AP-6, 1958

13. J. R. Wait and A. M. Conda, "Diffraction of Electromagnetic Waves by Smooth Obstacles for Grazing Angles," Journal of Research NBS D. Radio Propagation, Vol. 63D, 1959

14. M. G. Belkina, Tables to Calculate the Electromagnetic Field in the Shadow Region for Various Soils, Soviet Radio Press, Moscow, 1949 (Translated by Morris D. Friedman, ASTIA Document No. AD 110298, Nov 1956)

A. S. Goriainov, "Diffraction of Plane Electromagnetic Waves on a Conducting Cylinder," Doklady Akad. Nauk U.S.S.R, Vol. 109, 1956 (Translated by Morris D. Friedman, ASTIA Document No AD 110165)

P. A. Azriliant and M. G. Belkina, Numerical Results of the Theory of Diffraction of Radio Waves Around the Earth's Surface, Soviet Radio Press, Moscow, 1957

A. S. Goriainov, "An Asymptotic Solution of the Problem of Diffraction of a Plane Electromagnetic Wave by a Conducting Cylinder," Radiotekh. i Elektron., Vol. 3, 1958, pp. 603-614
(See also the English translation: Radio Engineering and Electronics, Vol. 3, 1959, pp. 23-39)

A. A. Federov, "Asymptotic Solution of the Problem of Diffraction of a Plane Electromagnetic Wave by a Perfectly Conducting Sphere," Radiotekh. i Elektron., Vol. 3, 1958, pp. 1451-1462

V. A. Fock and A. A. Federov, "Diffraction of a Plane Electromagnetic Wave by a Perfectly Conducting Paraboloid of Revolution," Zhur. Tekh. Fiz., Vol. 28, 1958, pp. 2548-2566

V. A. Fock, L. A. Vainshtein, and M. G. Belkina, Diffraction of Electromagnetic Waves by Certain Bodies of Revolution, Soviet Radio Press, 1957

Yu. K. Kalinin and E. L. Feinberg, "Ground Wave Propagation over the Surface of an Inhomogeneous Spherical Earth," Radiotekh. i Elektron., Vol. 3, 1958, pp. 1122-1132

15. University of Mic[illegible] Report [illegible] Report No. 3, by R. F. [illegible], Air Force Contract AF [illegible] University of M[illegible] AD 16 0790)

16. J. C. P. Miller, [illegible] Integral, Giving Tables of Solutions [illegible] Differential Equ[illegible] University Press [illegible]

17. National Physic[illegible] [illegible] England, private communication from G. F. Mil[illegible] greater than 7 were computed some time ago by P. H. [illegible] recently computed on the DEUCE electronic co[illegible] These and other relat[illegible] results will be published by this group at a later date.

18. See the preface of Ref. 16

19. Harvard University, "Tables of the Modified Hankel Functions of Order One-Third and of Their Derivatives," Annals of the Computation Laboratory of Harvard University, Vol. II, Harvard University Press, Cambridge, Mass., 1945

20. C. L. Pekeris, "Theory of Propagation of Sound in a Half-Space of Variable Sound Velocity Under Conditions of Formation of a Shadow Zone," J. Acoust. Soc. Amer., Vol. 18, 1946, pp. 295–315

"Accuracy of the Earth-Flattening Approximation in the Theory of Microwave Propagation," Phys. Rev., Vol. 70, 1956, pp. 518–522

"Asymptotic Solutions for the Normal Modes in the Theory of Microwave Propagation," J. Appl. Phys., Vol. 17, 1946, pp. 1108–1124

"The Field of a Microwave Dipole Antenna in the Vicinity of the Horizon," J. Appl. Phys., Vol. 18, 1947, pp. 667–680, 1025–1027

21. The Computation Laboratory, National Bureau of Standards, Tables of Bessel Functions of Fractional Order, Vols. I and II, New York, Columbia University Press, 1948–1949

22. J. B. Keller, "Diffraction by a Convex Cylinder," IRE Trans., Vol. AP-4, 1956, pp. 312–321

22. J. B. Keller, "How Dark is the Shadow of a Round- [illegible]?" Research Report Em-119, Air Force Contract AF 19(604)1717, New York University, Oct 1958 (AFCRC-TN-58-580, ASTIA Document No. AD 207820)

J. B. Keller and B. R. Levy, "Diffraction by a Smooth Object," Communications on Pure and Applied Mathematics, Vol. 12, 1959, pp. 159–209

B. Levy, "Diffraction by an Elliptic Cylinder," Research Report EM-121, Air Force Contract AF 19(604)1717, New York University, Dec 1958 (AFCRC-TN-59-103, ASTIA Document No. AD 208235)

23. W. Franz, "The Green's Functions of Cylinders and Spheres," Z. Naturforsch., Vol. 9A, 1954, pp. 705–716

W. Franz and R. Galle, "Semiasymptotic Series for the Diffraction of a Plane Wave by a Cylinder," Z. Naturforsch., Vol. 10A, 1955, pp. 374–378

W. Franz and P. Beckmann, "Creeping Waves for Objects of Finite Conductivity," Trans. Institute Radio Engineers, Vol. AP-4, 1956, pp. 203–208

W. Franz, "Theorie der Beugung Elektromagnetischer Wellen," Ergebnisse der Angewandten Mathematik, Part 4, Berlin, Springer-Verlag, 1957

W. Franz and P. Beckmann, "Berechnung der Streuquerschnitte von Kugel und Zylinder unter Anwendung einer modifizierten Watson-Transformation," Z. Naturforsch., Vol. 12a, 1957, pp. 533–537

W. Franz and P. Beckmann, "Uber die Groensche Funktion Transparenter Zylinder," Z. Naturforsch., Vol. 12a, 1957, pp. 257–267

W. Franz and P. Beckmann, "Asymptotisches Verhalten der Zylinder-Funktionen in Abhangigheit vom komplexen Index," Z. angew. Math. u. Mech., 37, 1957, pp. 17–27

K. Klante, "Zur Beugun skalarer Wellen am Rotations-Paraboloid," Ann. phys., Vol. 3, 1959, pp. 171–182

24. Massachusetts Institute of Technology, "Properties and Tables of Extended Airy-Hardy Integrals," by M. V. Cerrillo and W. H. Kautz, Technical Report No. 144, Research Laboratory of Electronics, M.I.T., 15 Nov

25. P. M. Woodward and A. M. Woodward, "Four-Figure Tables of the Airy Function in the Complex Plane," Phil. Mag., (7), Vol. 37, 1946, pp. 236-261

26. National Bureau of Standards, "Phase of the Low Radio Frequency Ground Wave," by J. R. Johler, W. J. Kellar and L. C. Walters, National Bureau of Standards Circular 573, June 1956

27. H. Poincaré, "Upon the Diffraction of Hertizian Waves," Rendiconti del Circulo Matematico di Palermo, Vol. 29, 1910, pp. 169-260

(The only author who has used Poincaré's notation is W. v. Rybczysnki, "Upon the Propagation of Radio Waves Around a Spherical Earth," Ann. phys. (4 Ser.), Vol. 41, 1913, pp. 191-208)

28. A. E. H. Love, "The Transmission of Electric Waves Over the Surface of the Earth," Trans. Roy. Soc., Vol. 215A, 1915, pp. 105-131

29. L. Lorenz, "Upon the Reflection and Refraction of Light by a Transparent Sphere," Videnskabernes Selskabs Skrifter, 1890 (Oeuvres Scientifiques I, 1898, pp. 405-502)

30. Sir G. B. Airy, "On the Intensity of Light in the Neighborhood of a Caustic," Trans. Cambridge Phil. Soc., Vol. 6, 1838

31. Sir G. G. Stokes, "On the Numerical Calculation of a Class of Definite Integrals and Infinite Series," Trans. Cambridge Phil. Soc., Vol. 9, 1851

32. H. M. Macdonald, "The Diffraction of Electric Waves Around a Perfectly Reflecting Obstacle," Trans. Roy. Soc. A, Vol. 210, 1910, pp. 11-[illegible]

33. H. Bremmer, Terrestial Radio Waves, New York, Elsevier, 1949

34. S. O. Rice, "Diffraction of Plane Radio Waves by a Parabolic Cylinder, Calculation of Shadows Behind Hills," Bell System Tech. J., Vol. [illegible], Mar 1954, pp. 417-504