NAVSEA
WARFARE CENTERS
NEWPORT

DEPARTMENT OF THE NAVY
NAVAL UNDERSEA WARFARE CENTER
DIVISION NEWPORT
OFFICE OF COUNSEL
PHONE: 401 832-3653
FAX: 401 832-4432
DSN: 432-3653

Attorney Docket No. 95918
Date: 27 September 2010

The below identified patent application is available for licensing. Requests for information should be addressed to:

TECHNOLOGY PARTNERSHIP ENTERPRISE OFFICE
NAVAL UNDERSEA WARFARE CENTER
1176 HOWELL ST.
CODE 07TP, BLDG. 990
NEWPORT, RI 02841

Serial Number 12/887,794

Filing Date 22 September 2010

Inventor Steven R. Snarski

Address any questions concerning this matter to the Office of Technology Transfer at (401) 832-1511.

DISTRIBUTION STATEMENT
Approved for Public Release
Distribution is unlimited

20101001244

Attorney Docket No. 95918

APPARATUS FOR ELECTRO-MAGNETO-HYDRO-DYNAMIC ENERGY HARVESTING

STATEMENT OF GOVERNMENT INTEREST

[0001] The invention described herein may be manufactured and used by or for the Government of the United States of America for Governmental purposes without the payment of any royalties thereon or therefor.

CROSS REFERENCE TO OTHER PATENT APPLICATIONS

[0002] None.

BACKGROUND OF INVENTION

1) Field of the Invention

[0003] The present invention is directed to electromagnetic induction.

2) Description of Prior Art

[0004] The theory behind electromagnetic flow measurements is rooted in the field of magneto-hydro-dynamics (MHD), which is the branch of continuum mechanics concerned with the flow of electrically conducting fluids in the presence of electromagnetic fields. Comprehensive reviews of the field of MHD are provided in Shercliff, J.A., *The Theory of*

Electromagnetic Flow Measurement, Cambridge University Press, Cambridge, pp. 27-31 (1962) and Branover, H., *Magnetohydrodynamic Flow in Ducts*, John Wiley & Sons, New York (1978). Of interest is the motion, u, of an electrically conducting fluid through an externally applied and steady state transverse magnetic field, B. Through a process known as electromagnetic induction, an electric field is established in the fluid given by,

$$\vec{E} = \vec{u} \times \vec{B} \tag{1}$$

[0005] The process is a direct consequence of Faraday's second law of induction describing the relative motion of magnets and electrical conductors. For fluids with relatively low conductivity, e.g., seawater versus liquid metals, secondary effects due to self induction can be neglected. If a pair of fixed electrodes are placed in the flow or at a bounding surface, a voltage is induced across the electrodes according to Bevir, M.K., "The Theory of Induced Voltage Electromagnetic Flowmeters", *J. Fluid Mech.*, vol. 43, part 3, pp. 577-590 (1970),

$$\varphi_{12} = \int_{\Re} \vec{E} \bullet \vec{j}_v \, dV \quad , \tag{2}$$

where $\vec{j}_v$, referred to as the virtual current density vector by Bevir (1970), is the current field that would be produced if a

unit current was passed through the electrodes with no flow present. In essence, $\vec{j}_v$ is a receiving function or weight factor that maps the induced electric field in the fluid to the electrodes and it is determined entirely by the electrode shape and electrical boundary conditions.

[0006] From Equations (1) and (2), if the induced voltage, magnetic field and electrode properties are known, it is possible to deduce properties of the fluid motion. Of particular interest is the use of the developed electrode voltage to drive an external load and thus generate useful power. Therefore, useful energy can be extracted from low magnetic Reynolds number fluid flows, e.g., undersea vehicles.

SUMMARY OF THE INVENTION

[0007] Systems and methods in accordance with exemplary embodiments of the present invention utilize flow induced electromagnetic induction as an electrical power source. An electromagnetic flow meter, rather than monitoring the flow rate in a system, is connected to a load to deliver useful energy. One suitable application is energy harvesting for wireless sensor nodes on unmanned autonomous vehicles in the undersea environment. Other applications include any system that involves low magnetic Reynolds number flows of conducting fluids and the need for low-level continuous electrical power sources.

[0008] In accordance with one exemplary embodiment, the present invention is directed to an electro-magneto-hydro-dynamic electrical power source that includes a platform having a surface on which is mounted a permanent magnet. Suitable platforms include, but are not limited to, a ship hull, a submarine hull, an unmanned underwater vehicle hull, a spillway, an interior surface of a pipe, a sluice, a buoy, a sea floor or a river bed. In general, the platform is any structure that is in contact with an electrically conductive fluid such that relative motion can be provided between that structure and the fluid.

[0009] The permanent magnet has a width and a length measured perpendicular to the width. In one embodiment, the permanent magnet is rectangular. Suitable materials for the permanent magnet include, but are not limited to, a neodymium iron boron magnet and flexible magnet sheeting. In one embodiment, the permanent magnet has a strength of from about 1 to about 2 Tesla.

[0010] The power source also includes a pair of electrodes running along the length of the permanent magnet and spaced from each other by the width of the permanent magnet and an electric load in communication with the pair of electrodes. This electrode load can be, for example, a battery charger. The permanent magnet and pair of electrodes are configured to

deliver electric power to the load when exposed to a flow of electrically conductive fluid in a direction parallel to the pair of electrodes.

[0011] The power source can also include a second pair of electrodes separate from the first pair and running along the width of the permanent magnet and spaced from each other by the length of the permanent magnet. Therefore, the second pair of electrodes is orthogonal to the first pair of electrodes. The second pair of electrodes is in communication with the load, and the permanent magnet and second pair of electrodes are configured to deliver electric power to the load when exposed to a flow of electrically conductive fluid in a direction parallel to the second pair of electrodes. In one embodiment, the width of the permanent magnet equals the length of the permanent magnet. For example, the permanent magnet is a square.

[0012] The present invention is also directed to an electro-magneto-hydro-dynamic electrical power source that includes a platform having a surface and an array of electromagnetic induction devices attached to the surface. The array of electromagnetic induction devices includes a plurality of rows and a plurality of columns, and each electromagnetic induction device includes the permanent magnet attached to the surface and a pair of electrodes. Again, the permanent magnet has a width and a length measured perpendicular to the width, and the pair

of electrodes runs along the length of the permanent magnet and are spaced from each other by the width of the permanent magnet.

[0013] An electric load is provided in communication with each pair of electrodes. The permanent magnet and pair of electrodes of each electromagnetic induction device are configured to deliver electric power to the load when exposed to a flow of electrically conductive fluid in a direction parallel to the pair of electrodes.

[0014] In one embodiment, the electromagnetic induction devices are arranged in the array such that the widths of the permanent magnets run parallel to the rows and the lengths of the permanent magnets run parallel to the columns. In one embodiment, adjacent rows are spaced apart by a distance equal to about twice the length of each permanent magnet, and adjacent columns are spaced apart by a distance equal to about twice the width of each permanent magnet.

[0015] The present invention is also directed to a method for generating electrical power where the surface of a platform containing an electromagnetic induction device is placed in contact with a flow of electrically conductive fluid. The electromagnetic induction device includes a permanent magnet having a width and a length measured perpendicular to the width and a pair of electrodes running along the length of the permanent magnet and spaced from each other by the width of he

permanent magnet. An electric load is attached to the pair of electrodes, and power is delivered to the load that results from the flow of the electrically conductive material parallel to the pair of electrodes.

[0016] In one embodiment, each electromagnetic induction device also includes a second separate pair of electrodes running along the width of the permanent magnet and spaced from each other by the length of the permanent magnet. The second pair of electrodes is in communication with the load and the permanent magnet such that power is delivered to the load resulting from the flow of the electrically conductive material parallel to the second pair of electrodes.

[0017] In one embodiment, the surface of the platform an array containing a plurality of electromagnetic induction devices arranged in a plurality of rows and a plurality of columns. Adjacent rows in the array are spaced apart by a distance equal to about twice the length of each permanent magnet, and adjacent columns in the array are spaced apart by a distance equal to about twice the width of each permanent magnet.

BRIEF DESCRIPTION OF THE DRAWINGS

[0018] A more complete understanding of the invention and many of the attendant advantages thereto will be readily

appreciated as the same becomes better understood by reference to the following detailed description when considered in conjunction with the accompanying drawings wherein like reference numerals and symbols designate identical or corresponding parts throughout the several views and wherein:

[0019] FIG. 1 is a schematic illustration of an embodiment of electro-magneto-hydro-dynamic power source with attached load in accordance with the present invention;

[0020] FIG. 2 is a graph illustrating the virtual current field around two electrodes in the power source of the current invention;

[0021] FIG. 3 is a qualitative assessment of the effect of magnet width on the DC output voltage of an electrode pair;

[0022] FIG. 4 is a schematic illustration of another embodiment of electro-magneto-hydro-dynamic power source with attached load in accordance with the present invention;

[0023] FIG. 5a is an illustration of an electrode layout for used in the estimating DC power levels in an embodiment of a power source in accordance with the present invention;

[0024] FIG. 5b is a contour plot of the log power estimated DC power levels in an embodiment of a power source in accordance with the present invention;

[0025] FIG. 5c is a line plot of the predicted DC power levels in an embodiment of a power source in accordance with the present invention;

[0026] FIG. 6 is a schematic representation of an array of electromagnetic induction devices for use in an embodiment of the power source of the present invention; and

[0027] FIG. 7 is a schematic representation of an embodiment of a electromagnetic induction device arranged for a cross flow application of the power source of the present invention.

DETAILED DESCRIPTION OF THE INVENTION

[0028] Exemplary embodiments of systems and methods in accordance with the present invention utilize a passive system to convert hydrodynamic, i.e., flow, energy to electrical power. Referring initially to FIG. 1, the basic components utilized in the electro-magneto-hydro-dynamic energy harvesting power source of the present invention are illustrated. These components include a permanent magnet 10 that is mounted flush to the surface of a platform 30. The permanent magnet 10 having a width 50 and a length 55. This surface of the platform is in contact with the conductive liquid. Suitable conductive liquids include, but are not limited to, seawater, brackish water, liquids in which conducting elements such as salts or metals have been introduced and liquid metals.

[0029] Any platform that is in contact with a conducting liquid where there is relative motion between the platform and the liquid can be used. Suitable platforms include, but are not limited to, the hulls of surface vessels and undersea vessels, including unmanned undersea vessels, that are deployed in brackish water or seawater. The platform can also be an object pulled or towed by the vessels such as a towed array. In other embodiments, the platform is stationary and the liquid flows over the surface of the platform. In these embodiments, the platform can take the form of a pipe, plate, channel, weir or sluice. Other suitable platforms include centrifuges, components in water or wastewater treatment facilities, buoys, cooling towers, swimming pools and swimming pool piping.

[0030] Any suitable method for mounting the permanent magnet 10 to the platform can be used including using mechanical fasteners, adhesives and welds.

[0031] The system components also include a plurality of electrodes 20 disposed on the surface of the permanent magnet 10 each having a distance of separation 60 in the direction of the width 50 of the magnet and a length 65 running along a length 55 of the magnet 10. As illustrated, the components include two electrodes 20; however, any number of electrodes 20 can be included in a given system provided that the electrodes 20 are arranged in pairs. Suitable materials for the electrodes 20

include any conductive material that is compatible with the platform, magnet and liquid, for example, copper, aluminum and silver.

[0032] A dielectric layer 15 is applied between the surface of the permanent magnet 10 and the electrodes 20 to serve as an insulator between the magnet 10 and the electrodes 20. In a preferred embodiment the dielectric layer 15 is a coating of biaxially-oriented polyethylene terephthalate (boPET), a polyester film with a commercial trade name of Mylar®. The dielectric layer 15 can be as thin as 2-3 μm.

[0033] The combination of the permanent magnet 10 and the pair of electrodes 20 forms an electromagnetic induction device that can produce electrical power when exposed to a flow of electrically conductive fluid in a direction parallel to the pair of electrodes 20. Electromagnetic power sources in accordance with the present invention can use a single electromagnetic induction device or a plurality of electromagnetic induction devices arranged, for example in an array containing a plurality of rows and columns of electromagnetic induction devices.

[0034] In one embodiment, the electrodes 20 are mounted flush to the surface of a platform 30, and the magnet 10 is arranged around the electrodes 20. Alternatively, the electrodes 20 are attached to or disposed on the magnet 10. The electrodes 20

could also be located on opposite walls of a pipe or channel through which the conducting fluid passes. In one embodiment, the electrodes are mounted on standoffs spaced up from the surface of the platform, and therefore, are located directly within the flow of the conducting liquid. Any suitable method known and available in the art can be used to attach the electrodes 20 to the permanent magnet 10, platform 30 surface or standoffs.

[0035] Suitable permanent magnets 10 are compatible with the environment and electrically conductive fluid in which the permanent magnet is located. These permanent magnets 10 include a neodymium iron boron magnet and flexible magnet sheeting. In one embodiment, the permanent magnet 10 has a strength of from about 1 to about 2 Tesla.

[0036] The conducting liquid moves relative to the surface of the platform 30. The flow of the conducting liquid or fluid is in accordance with a velocity field 40. This relative flow between the surface of platform 30 and the conducting fluid, which results from the movement of either the platform 30, the fluid or both the platform and the fluid, produces an electric potential difference between the pair of electrodes 20, which can be delivered as electric power to a load 70 that is in communication with each one of the pair of electrodes 20.

[0037] This load 70 can be any suitable device that consumes electrical power including electronics, lights, logical processors, alarms, timers and clocks. In one embodiment, the load is a battery charger that provides, for example, a trickle charge to a battery. The load 70 can be located on the same surface of the platform as the permanent magnet, on an opposite surface or at a location remote from the surface such as on or in the object containing the platform.

[0038] In theory, the electric field and the induced voltage across the electrodes 20, φ_{12}, from equations (1) and (2) can be written in an expanded form as:

$$\varphi_{12}(t) = \int_{-\infty}^{\infty}\int_{-\infty}^{\infty}\int_{-\infty}^{\infty} \vec{u}(\vec{x},t) \bullet \vec{h}(\vec{x}) d^3\vec{x} \quad , \tag{3}$$

$$\vec{h}(\vec{x}) = \vec{B}(\vec{x}) \times \vec{j}_v(\vec{x}) . \tag{4}$$

[0039] As written, $\vec{h}(\vec{x})$ represents the spatial sensitivity distribution, or Green's function, for the device which maps the velocity field to the electrode voltage. For the geometry shown in FIG. 1 and neglecting second order edge effects in the stream-wise, (x), direction, the induced voltage at the electrodes according to equations (3) and (4) is given by,

$$\varphi_{12}(t) = \int_{-\infty}^{\infty}\int_{0}^{\infty}\int_{-\infty}^{\infty} \vec{u}(\vec{x},t) B_y(\vec{x}) j_{v_z}(\vec{x}) dz dy d \quad , \tag{5}$$

where the product $B_y(\bar{x})j_{v_z}(\bar{x})$ represents the stream wise component of the transducer sensitivity function $h(\bar{x})$, and $u(\bar{x},t)$ represents the unsteady stream wise velocity field which can be broken down into a mean and fluctuating (zero mean) component according to

$$u(\bar{x},t)=U(\bar{x},t)+u'(\bar{x},t). \tag{6}$$

[0040] Assuming a steady state mean flow $U(\bar{x},t)=U(\bar{x})$, the voltage expression becomes,

[0041]

$$\varphi_{12}(t)=\int_{-\infty}^{\infty}\int_{0}^{\infty}\int_{-\infty}^{\infty}\left[U(\bar{x})+u'(\bar{x},t)\right]B_y(\bar{x})j_{v_Z}(\bar{x})dzdydx \quad . \tag{7}$$

[0042] Equation (7) illustrates that the device is capable of generating both DC, i.e., mean flow, and AC, i.e., turbulent fluctuations, power. Although the fluctuating velocity levels in turbulent wall-bounded flows are of a magnitude capable of generating useful power, e.g., typically, $u'\sim 0.1U$, the power levels ultimately end up being too low to be of any use due to self-limiting effects from spatial averaging. Thus, neglecting the turbulent fluctuations, which could be implemented physically by suitable low pass filtering, Eq. (7) reduces to an expression for the DC electrode voltage or,

$$\varphi_{12} = \int_{-\infty}^{\infty}\int_{0}^{\infty}\int_{-\infty}^{\infty} U(\vec{x}) B_y(\vec{x}) j_{v_z}(\vec{x}) dz dy dx \quad . \tag{8}$$

[0043] To proceed, analytical expressions for the three terms in the integrand are required. The virtual current field, which is merely the current density field produced by the electrodes per unit current or $j_{v_z}(\vec{x}) = J_z(\vec{x})/I$ can be determined from the voltage field produced by the electrodes $\psi(\vec{x})$ according to Ohm's Law in the form,

$$J_z(\vec{x}) = \sigma E_x(\vec{x}) = -\sigma \frac{\partial \psi(\vec{x})}{\partial z} \quad , \tag{9}$$

[0044] Although it is straightforward to derive full 3-dimenisonal analytical expressions for the electrode voltage field in Equation (9) and magnetic field in Equation (8), some simplifying assumptions can be introduced that illustrate important properties of the device. For the electrode voltage field, the electrodes can be modeled as a line-sink line-source pair for which the two-dimensional Poisson solution is

$$\psi(y, z) = \frac{i}{4\pi\sigma} \ln\left[\frac{y^2 + (z+a)^2}{y^2 + (z-a)^2}\right] , \tag{10}$$

where $i = I/2c$ is the electrode current per unit length. From Equations (9) and (10), the virtual current field becomes,

$$j_{v_z}(y,z) = \frac{i}{2\pi\sigma}\left[\frac{(z+a)}{y^2+(z+a)^2} - \frac{(z-a)}{y^2+(z-a)^2}\right]. \tag{11}$$

[0045] This function, which is plotted in FIG. 2 as a function of z/a at various values of y/a, is symmetric about $z/a = 0$ with positive values between the electrodes (current flow from left to right) and negative values outside the electrodes (current flow from right to left). Each line on the graph represents a different value of y/a from $y/a = 0.1$ up to $y/a = 2$. The complete value set for y/a is $\{0.1, 0.2, 0.4, 0.6, 0.8, 1, 1.2, 1.4, 1.6, 1.8, 2\}$. In addition, the function decays rapidly with distance from the wall, indicating that the electrode response is heavily weighted by the flow near the wall. The levels decay by approximately 30 dB by $y/a = 3$. These properties are a direct result of the dipole character of source-sink field.

[0046] From FIG. 2, it is clear that the form of the magnet field is important to the overall voltage and power response of the device. A maximum output from the device will occur when the magnet width 50 (FIG. 1) is matched to the electrode separation distance 60 so that the fringing electrode and magnet fields add constructively. This is illustrated conceptually in FIG. 3 through a qualitative examination of the effect of magnet

widths relative to a fixed electrode separation on the DC voltage output of the device.

[0047] In FIG. 3, part (a) illustrates the form of the virtual current field $j_{v_z}(z)$ near the wall representative of that shown in FIG. 2. Part (b) illustrates the expected form of the magnetic field $B_y(z)$ near the wall produced by a permanent magnet. Suitable permanent magnets are commercially available and known to one of skill in the art. Part (c) illustrates the form of the spatial sensitivity distribution $h_x(z) = j_{v_z}(z) B_y(z)$ near the wall, which is simply the product of parts (a) and (b) in any given column.

[0048] In FIG. 3, three columns are presented. The left column represents the case of a very large magnet 10 relative to the electrode 20 spacing 60 $(b >> a)$. For this case, the DC component goes to zero. Positive and negative regions of dipole electrode response integrate to zero and thus act to attenuate long wavelength components and cancel the DC component completely.

[0049] The right most column is the opposite extreme of a very small magnet 10 relative to the electrode 20 spacing 60 $(b << a)$. Here, no cancellation occurs but the overall signal level eventually goes to zero as the effective sensing area of the device diminishes.

[0050] The center column represents the optimum case where the electrode 20 spacing 60 and magnet width 50 are equivalent $(b = a)$. For this case, no cancellation occurs and the full electrode control volume responds to the flow.

[0051] Part (d) of FIG. 3 provides a qualitative illustration of the variation in device output DC voltage, or power, with the ratio a/b consistent with the three cases examined.

[0052] Referring to FIG. 4, an exemplary embodiment of an electro-magneto-hydro-dynamic energy harvesting device 400 configured in accordance with the a/b ratios discussed above. This device 400 includes a magnet 410 mounted flush on the surface of the platform 430. A pair of electrodes 420 is also mounted on the surface of the magnet running along the length 480 of the magnet 410 in a direction parallel to the direction of flow 460 of the conducting liquid passing over the surface of the platform 430. A dielectric layer 450 is applied between the surface of the magnet 410 and the electrodes 420 to serve as an insulator between the magnet 410 and the electrodes 420. In a preferred embodiment the dielectric layer 450 is a coating of biaxially-oriented polyethylene terephthalate (boPET), a polyester film with a commercially trade name of Mylar®. The dielectric layer 450 can be as thin as 2-3 μm.

[0053] The pair of electrodes 420 are spaced from each other such that the width of the magnet 440 is the same as the spacing between the electrodes, i.e., $a/b=1$. In addition, each electrode 420 in the pair of electrodes runs along an edge of the permanent magnet 410 so that the magnet 410 does not extend past the electrodes 420. The electrode 420 and magnet 410 lengths 480 have also been made equivalent for compactness, although this is not required from an operational standpoint. The electrodes 420 are again in communication with a suitable load 490.

[0054] Although it is straightforward to derive an analytical expression for the magnetic field and thus the product $B_y(y,z)j_{v_z}(y,z)$ for the case $b=a$ for use in evaluating equation (8), an approximation is known that greatly simplifies the algebra. It is assumed that the magnetic field is uniform and restricted just to the region between the electrodes 420, or

$$B_y(x)=\begin{cases} B_0 \; for |z| \le a \\ 0 \; elsewhere \end{cases} \tag{12}$$

[0055] This assumption will clip the second lobes for $|z|>a$ in FIG. 2, increase the magnitude of the primary lobe for $|z|\le a$ and will, therefore, act in an offsetting manner. It should be noted that Eq. (12) is exact for a pipe or channel flow with a strong external magnet 410. It was further assumed that the

mean velocity field between the electrodes 420 only varies in the wall-normal direction or $U(\vec{x})=U(y)$. With these assumptions, Eq. (8) with Equations (9) and (10) becomes,

$$\varphi_{12} = \frac{B_0}{2\pi}\int_0^{\infty} U(y)\ln\left[\frac{y^2+4a^2}{y^2}\right]dy \ . \qquad (13)$$

[0056] The maximum value for Eq. (13) will occur for a uniform flow field $U(y)=U_0$ where Eq. (13) reduces to,

$$\varphi_{12} = U_0 B_0 a \ . \qquad (14)$$

[0057] For other boundary layer velocity profiles, φ_{12} decreases monotonically from this value as the boundary layer thickness, δ, increases since lower velocity fluid at the inner portions of the boundary layer begin to dominate the response region $h_x(\vec{x})$ of the device. Even so, for turbulent boundary layers which are typical in most real applications, φ_{12} maintains 80% of the value given by Eq. (14) provided the boundary layer thickness is $\delta < 10a$. For practical considerations, Eq. (14) serves as a good estimate of the expected DC voltage output from the device for typical flows with strong magnets and relatively thin boundary layers, i.e., $\delta < a$.

[0058] From Eq. (14), it is clear that a measure of the induced electrode voltage can be used to obtain information on the mean flow in the boundary layer. This same information in combination with knowledge of pipe cross sectional area is what

is used in electromagnetic flow meter devices to measure flow rates in conduits. Exemplary embodiments of systems and methods in accordance with the present invention, however, are interested in the power that can be extracted from the flow via this electromagnetic induction mechanism.

[0059] Equation (14) provides an expression for the voltage induced across the electrodes due to electromagnetic induction. The useful power is given by the product of this induced electrode voltage and the electrode current I, or

$$P = \varphi_{12} I \ . \tag{15}$$

[0060] An estimate of the electrode current can be obtained from the product of the electrode current density, J_z, and the effective flow area through which the current acts, A_{eff}, or

$$I = J_z A_{eff} \ . \tag{16}$$

[0061] The electrode current density is given by Eq.(9). Using φ_{12} as a measure of the electrode voltage field and $2a$ as the relevant length scale over which this potential difference exists, equation (9) can be approximated by,

$$J_z \sim \sigma \frac{\varphi_{12}}{2a} \ . \tag{17}$$

[0062] The effective area through which this current acts is proportional to the planar (x,z) area of the electrode pair or,

$$A_{eff} \sim 2aL \quad , \tag{18}$$

where $L = 2c = 2d$, see FIG. 4. Equation (15) can thus be written,

$$P \sim \sigma L \varphi_{12}^2 . \tag{19}$$

[0063] With Eq. (14), this becomes,

$$P \sim \sigma L a^2 (B_0 U_0)^2 . \tag{20}$$

[0064] Referring to FIG. 5(a), numerical DC Power Estimates from Eq. (20) for various electrode separations, $2a$ (520) and electrode lengths, L (540) are shown in Figs. 5(b) and 5(c). The following conditions were assumed in these calculations:

$$U_0 = 5.1 m/s (UUV\ at\ 10\ knots)$$

$$B_0 = 1000\ Gauss = 0.1\ Tesla$$

$$\sigma = 2.89\ Siemans/m\ (seawater)$$

$$2a = 2b\ (magnet\ width = electrode\ separation)$$

$$a > \delta\ (\delta = boundary\ layer\ thickness)$$

[0065] The assumed magnetic field strength is a conservative estimate of that which would be produced by a commercially available, off-the-shelf magnet. Neodymium Iron Boron magnets are available that are rated at 1-2 Tesla, and since $P \sim B_0^2$, large increases in power levels over that which are estimated here could be anticipated. In addition, for smart skin applications, flexible magnetic sheeting could be utilized,

although the magnetic field strengths for these materials are likely lower.

[0066] Regarding the last assumption that $a > \delta$, this assumption assures that the bulk of the electrode spatial sensitivity function $h_x(\bar{x})$ is focused on the outer boundary layer flow and free stream where $u \sim U_0$ so that the output of the device is maximized. It has been shown that the vertical, i.e., wall normal, extent of $h_x(\bar{x})$ scales with a, the greater the electrode separation, the farther into the flow the electrodes sense. A similar conclusion can be drawn from the plot of the virtual current density in FIG. 3.

[0067] In application, as a is increased, the power levels will level off as $u \to U_0$ in domain of electrodes and eventually drop off as a is continually increased due to noise voltage effects. There will thus exist some optimum range of a/δ where output is a maximum. The noise voltage mechanism is not currently included in the analysis as is evident since Eq. (20) predicts $P \sim a^2$. The effect will be negligible however except for "large" electrode separations.

[0068] The predicted DC power levels are shown in Figs. 5(b) and 5(c). The plot in FIG. 5(b) is a contour plot of the log power levels from higher power levels 521 to lower power levels 522 as a function of electrode separation, $2a$, and electrode

length, L_x. Various iso-contour levels from 1μW through 10mW are indicated. With a stated unmanned underwater vehicle (UUV) application objective of 10mW of continuous power, it can be seen that the objective can be satisfied through the use of a single, $N=1$, relatively large device with dimensions L = 1m, by $2a$ = 20cm, 560.

[0069] Alternately, the 10mW power level can be obtained by using an array of smaller devices. One such possibility is a small square device with $2a = L_x \sim 1.5\ inches$, 580. Since the power level for this device is 10μW, an array of $N=1000$ devices would be required. The predicted power levels are also shown as line plots in FIG. 5(c) as a function of electrode separation, $2a$, for five different electrode lengths, $L_x = 1cm$ 523, $L_x = 4cm$ 524, $L_x = 10cm$ 525, $L_x = 40cm$ 526 and $L_x = 100cm$ 527. The intersection of these line plots with the various dashed horizontal lines illustrate the different possible device, $2a, L_x$, and array, N, geometries that can satisfy the stated power requirement of 10mW. The two configurations, 560, 580, identified in the contour plot are indicated. The single device power estimate may not be accurate due to the EM attenuation effect discussed above.

[0070] In one embodiment, the electro-magneto-hydro-dynamic energy source of the present invention includes a plurality of

electromagnetic induction devices arranged as a power harvesting array containing a plurality of columns and a plurality of rows. Referring to FIG. 6, a suitable array of energy harvesting electromagnetic induction devices 600 is illustrated. Each electromagnetic induction device includes a permanent magnet and at least one pair of electrodes as described herein, and all of the electromagnetic induction devices are mounted on the surface of a suitable platform.

[0071] The array includes a plurality of electromagnetic induction devices 610 arranged in a plurality of rows 620, each row containing a plurality of individual electromagnetic induction devices. The number of rows and the number of devices in each row are selected based upon the desired energy output. The electromagnetic induction devices are arranged such that the widths run along the rows perpendicular to the direction of liquid flow 630 and that the lengths run along the columns parallel to the direction of liquid flow 630.

[0072] To avoid interference between the various array elements and a canceling of the dipole sensitivity function $h_x(\bar{x})$, the individual devices 610 in the array 600 are separated or spaced apart. As illustrated, each device 610 or column is spaced apart by twice ($4a$) the width ($2a$) of a single device 610, and the rows are spaced apart by twice (2L) the length (L) of a given electromagnetic induction device 610. It is known that

$h_x(\bar{x})$ decays by approximately 30 dB by $|z| \sim 3a$, or $2a$ past the edge of the electrodes. A similar trend can also be seen in FIG. 3.

[0073] Consequently, a separation distance of $z = 4a$ between devices 610 is employed as shown in FIG. 6. A similar spacing of $x = 2L$ is implemented in the stream wise direction 630 to minimize the attenuation of the magnet B-field due to fringing from adjacent magnets. The total array dimensions can then be computed from the relations,

$$L_{array} = L_x(3m\text{-}2) \text{ and } W_{array} = 2a(3n\text{-}2) \tag{21}$$

where $m =$ number of rows, $n =$ number of columns and $N = nm$. For the smaller device and array identified in FIG. 5. *($2a = L_x = 1.5$ inches, $N = 1000$)*. The equations (21) yield the array dimensions shown in Table 1.

n	m	$W_{array}(in)$	$L_{array}(in)$
10	100	42	447
20	50	87	222
30	33	132	147
40	25	177	110

Table 1: Example $m \times n = N$ array configurations and dimensions to generate 10 mW of continuous power *($U_0 = 5.1$ m/s, $B_0 = 0.1$ Tesla, $2a = L_x = 1.5$ inches, $N = 1000$).*

[0074] Although these dimensions are a little large for certain applications, the power estimates assumed a conservative magnetic field strength of 0.1 Tesla (1000 Gauss). Because

permanent magnets with rated strengths in the range 1 - 2 Tesla are readily available, the average B-field in the domain of the electrode response $h_x(\bar{x})$ can likely be made much higher. As a result, each array element will yield more power thus reducing the total number of required elements and hence the overall array dimensions. However, it should be noted that the rated magnet strengths are at the surface of the magnet. Because the magnetic field decays rapidly with wall normal direction in an essentially exponential manner, the average value will be less than the rated magnet strength. Provided the electrode separation is small, however, an average value of 25% of the surface strength is a reasonable estimate. Assuming a modest factor of two increase in the average magnetic field, the power levels will increase by a factor of four and hence the number of required elements will decrease by a factor of four. For the example in Table 1, this reduces to $N = 250$ which yields a more convenient size array for a broader range of applications as shown in Table 2.

n	m	$W_{array}(in)$	$L_{array}(in)$
5	50	20	222
10	25	42	110
15	17	65	72

Table 2: Representative $m \times n = N$ array configuration and dimensions to generate $10mW$ of continuous power for certain applications, for example UUV applications

($U_0 = 5.1$ m/s, $B_0 = 0.2$ Tesla, $2a = L_x = 1.5$ inches, $N = 1000$).

[0075] Regarding cross flow considerations, exemplary embodiments of the energy harvesting device of the present invention including array configurations have assumed that the mean flow is aligned with the electrode's length. In general, this will not be the case due to factors such as ambient cross flows over the platform surface or turning maneuvers of vehicles. So that the device can generate maximum power for all mean flow orientations, the device, as illustrated in FIG. 7, can include two pairs of electrodes 702 arranged orthogonally on the single permanent magnet 704. As illustrated, the single permanent magnet is rectangular or square, and the pairs of electrodes are arranged on each set of opposing sides. Therefore, the mean flow 706 can be broken into two component flows 708, 710 such that each one of the components is parallel to one of the electrode pairs. By summing the electrode outputs, the device will respond to the mean velocity vector and maintain a constant power output independent of mean flow angle.

[0076] The present invention is also directed to a method for delivering electrical power to a load using the relative flow of electrically conducting fluid past the electromagnetic induction device of the present invention. In accordance with an exemplary

embodiment of this method, the surface of the platform containing the electromagnetic induction device is placed in contact with a flow of electrically conductive fluid. This flow can result from the movement of the fluid itself, for example water flow through a pipe or ocean current, or the movement of the object containing the platform, for example, the motion of a ship through the water.

[0077] The electromagnetic induction device includes a permanent magnet having a width and a length measured perpendicular to the width and at least one pair of electrodes running along the length of the permanent magnet and spaced from each other by the width of the permanent magnet. In one embodiment, each electromagnetic induction device includes a second separate pair of electrodes running along the width of the permanent magnet and spaced from each other by the length of the permanent magnet.

[0078] In addition to attaching a single electromagnetic induction device to the platform, an array containing a plurality of electromagnetic induction devices arranged in a plurality of rows and a plurality of columns can be attached to the surface of the platform.

[0079] An electric load, for example an electronic device or a battery charger is attached to the pair of electrodes. When the electromagnetic device includes the second pair of

electrodes, both pairs of electrodes are placed in communication with the load. When an array of electromagnetic devices is used, all of the electrode pairs in the array are placed in communication with the load. Adjacent rows in the array are spaced apart by a distance equal to about twice the length of each permanent magnet, and adjacent columns in the array are spaced apart by a distance equal to about twice the width of each permanent magnet.

[0080] Power is delivered to the load as a result of the flow of the electrically conductive fluid parallel to each pair of electrodes and across each permanent magnet. The power is directed from each pair of electrodes to the load that is in communication with the pair of electrodes. The flow of the conducting fluid can result from the flow of the fluid itself or can be induced through the movement of the platform.

[0081] It will be understood that many additional changes in details, materials, steps, and arrangements of parts which have been described herein and illustrated in order to explain the nature of the invention, may be made by those skilled in the art within the principle and scope of the invention as expressed in the appended claims.

Attorney Docket No. 95918

APPARATUS FOR ELECTRO-MAGNETO-HYDRO-DYNAMIC ENERGY HARVESTING

ABSTRACT

An electro-magneto-hydro-dynamic electrical power source is constructed from a platform having a surface on which a permanent magnet is attached. The permanent magnet comprising a width and a length measured perpendicular to the width. A pair of electrodes are disposed running along the length of the permanent magnet and are spaced from each other by the width of the permanent magnet. An electric load is provided in communication with the pair of electrodes. The permanent magnet and pair of electrodes are configured to deliver electric power to the load when exposed to a flow of electrically conductive fluid in a direction parallel to the pair of electrodes.

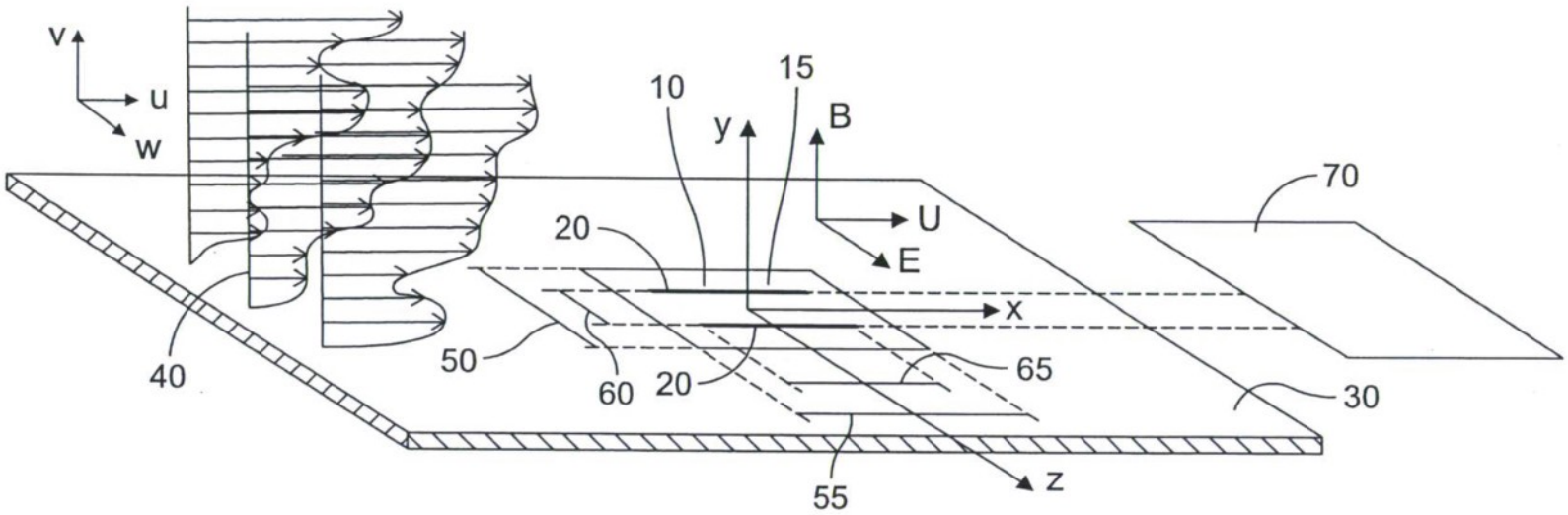

FIG. 1

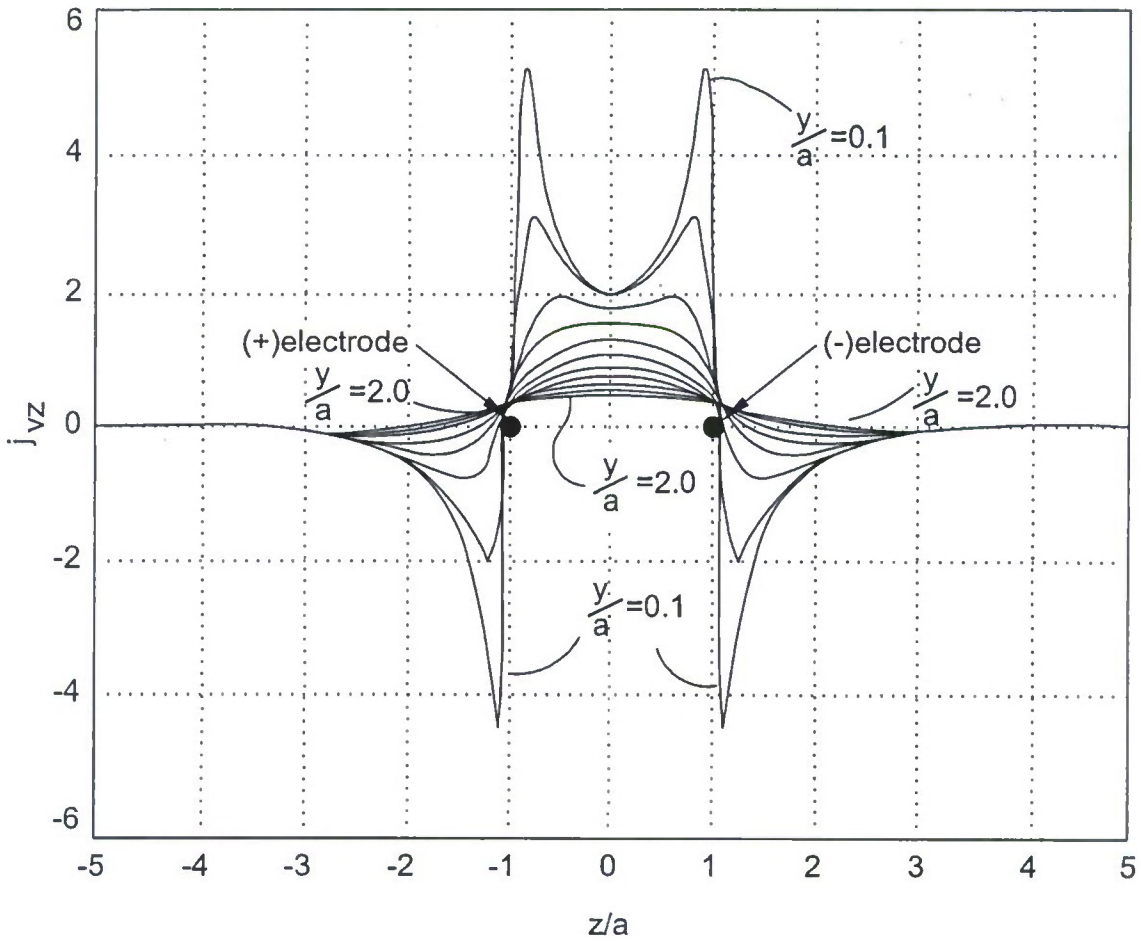
6
4
2
0
-2
-4
-6
-5
-4
-3
-2
-1
0
1
2
3
4
5
z/a
j_{vz}
y/a =0.1
(+)electrode
(-)electrode
y/a =2.0
y/a =2.0
y/a =2.0
y/a =0.1

FIG. 2

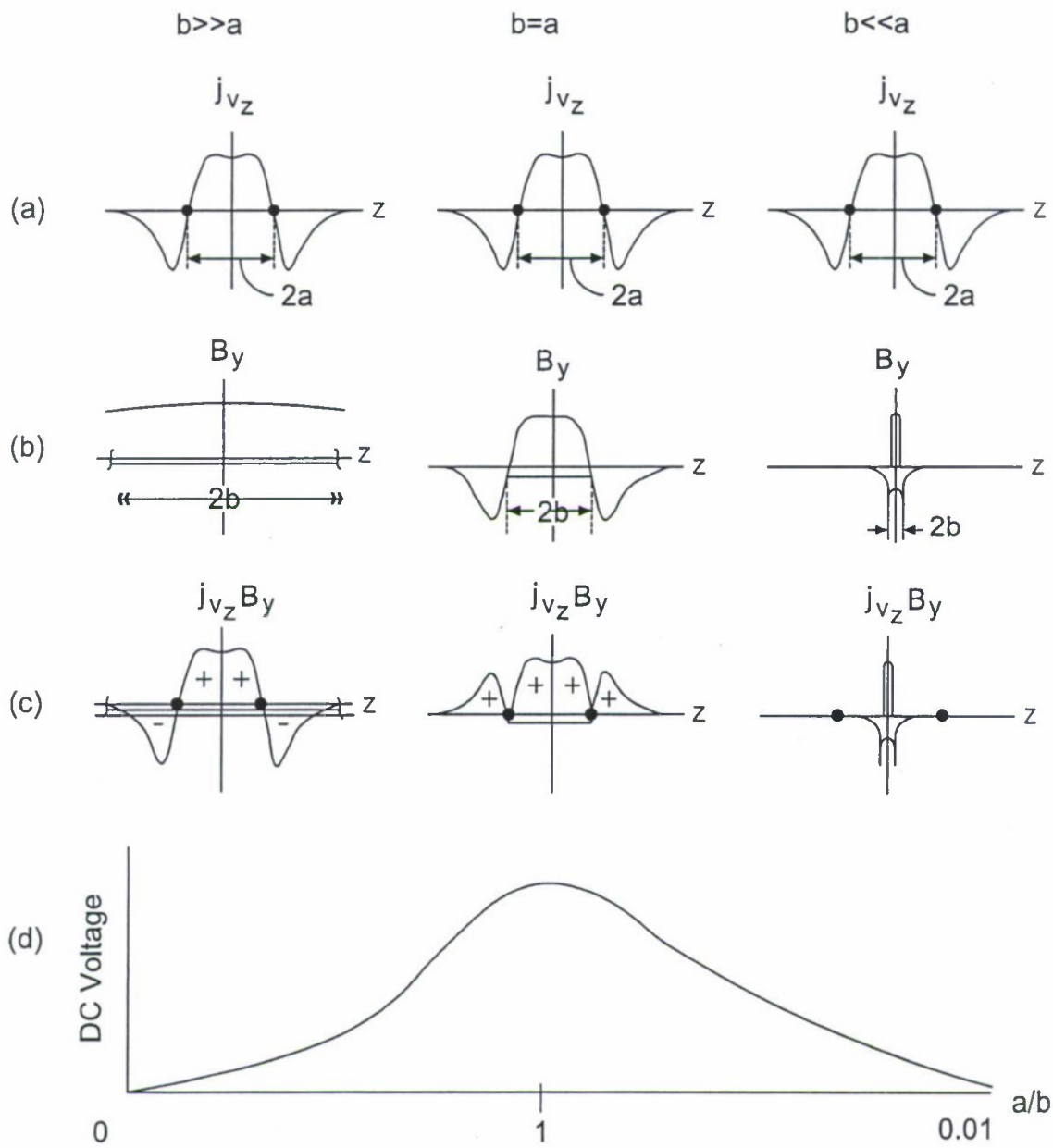

FIG. 3

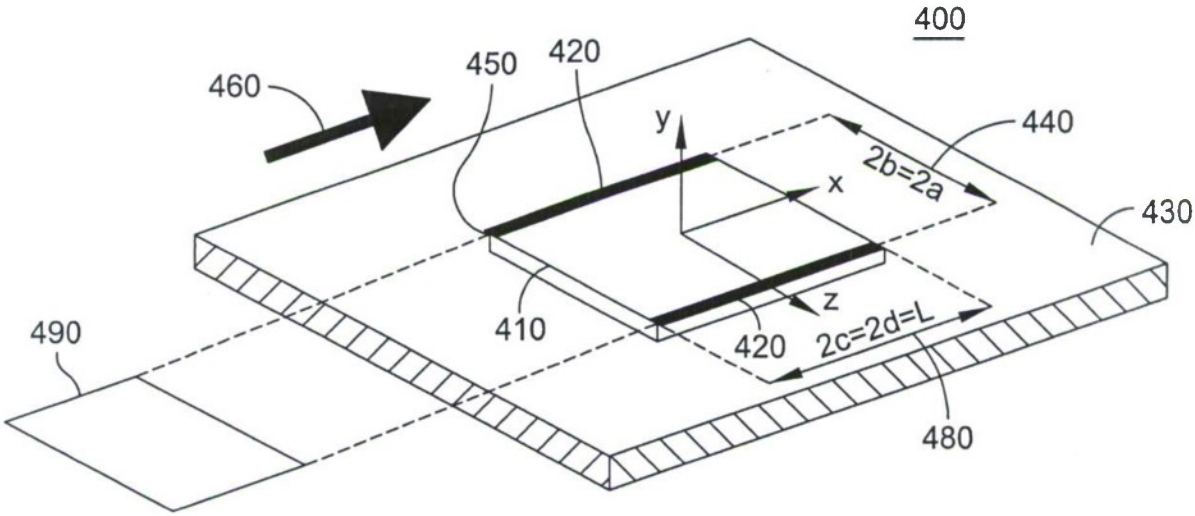

FIG. 4

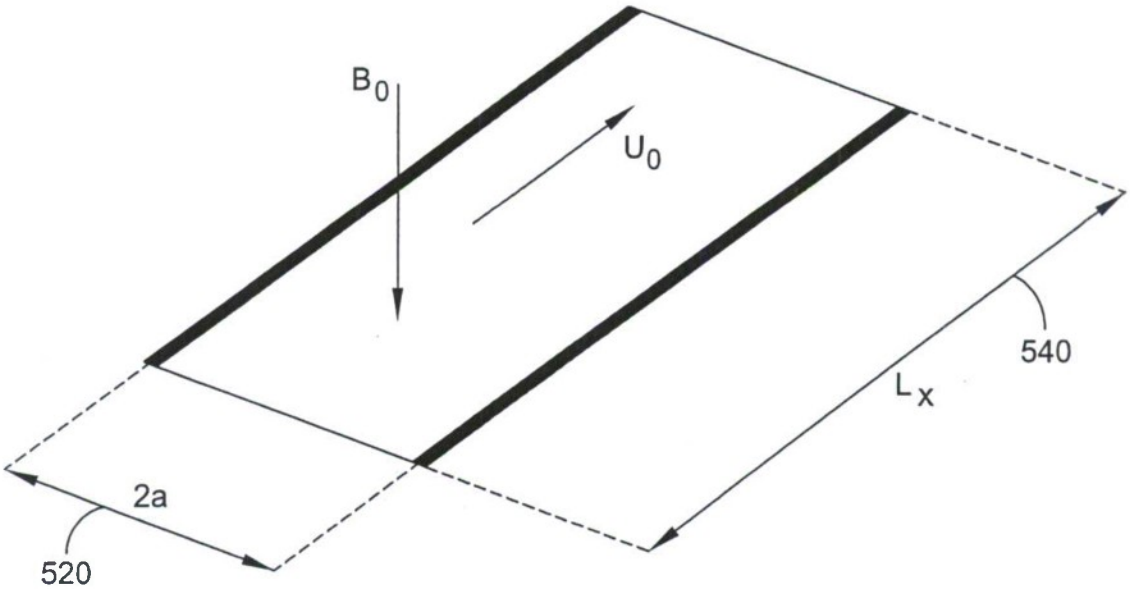

FIG. 5a

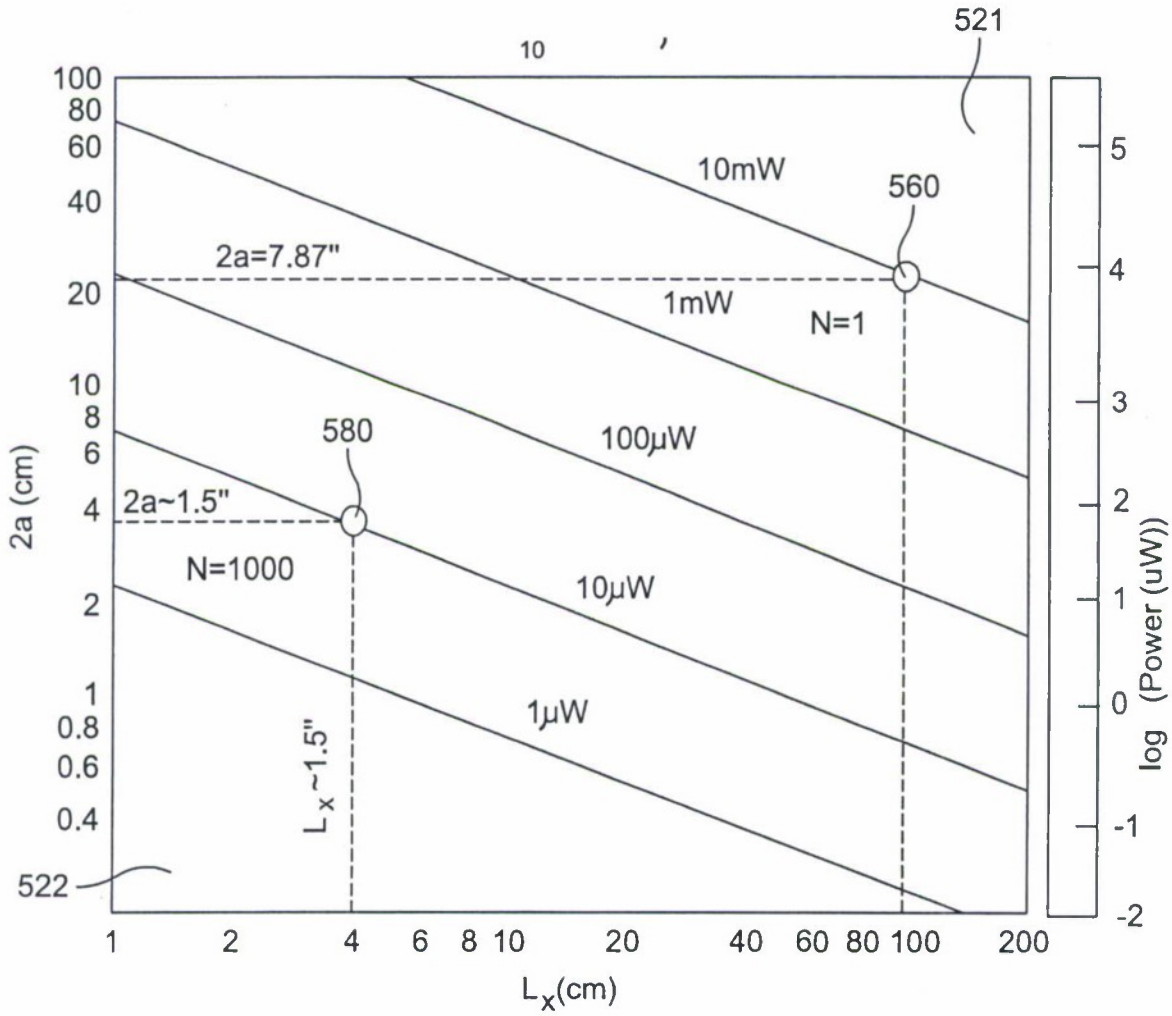
521
10
100
80
60
40
20
10
8
6
4
2
1
0.8
0.6
0.4
2a (cm)
10mW
560
2a=7.87"
1mW
N=1
100μW
580
2a~1.5"
N=1000
10μW
1μW
L_x~1.5"
522
1
2
4
6
8
10
20
40
60
80
100
200
L_x(cm)
5
4
3
2
1
0
-1
-2
log (Power (uW))

FIG. 5b

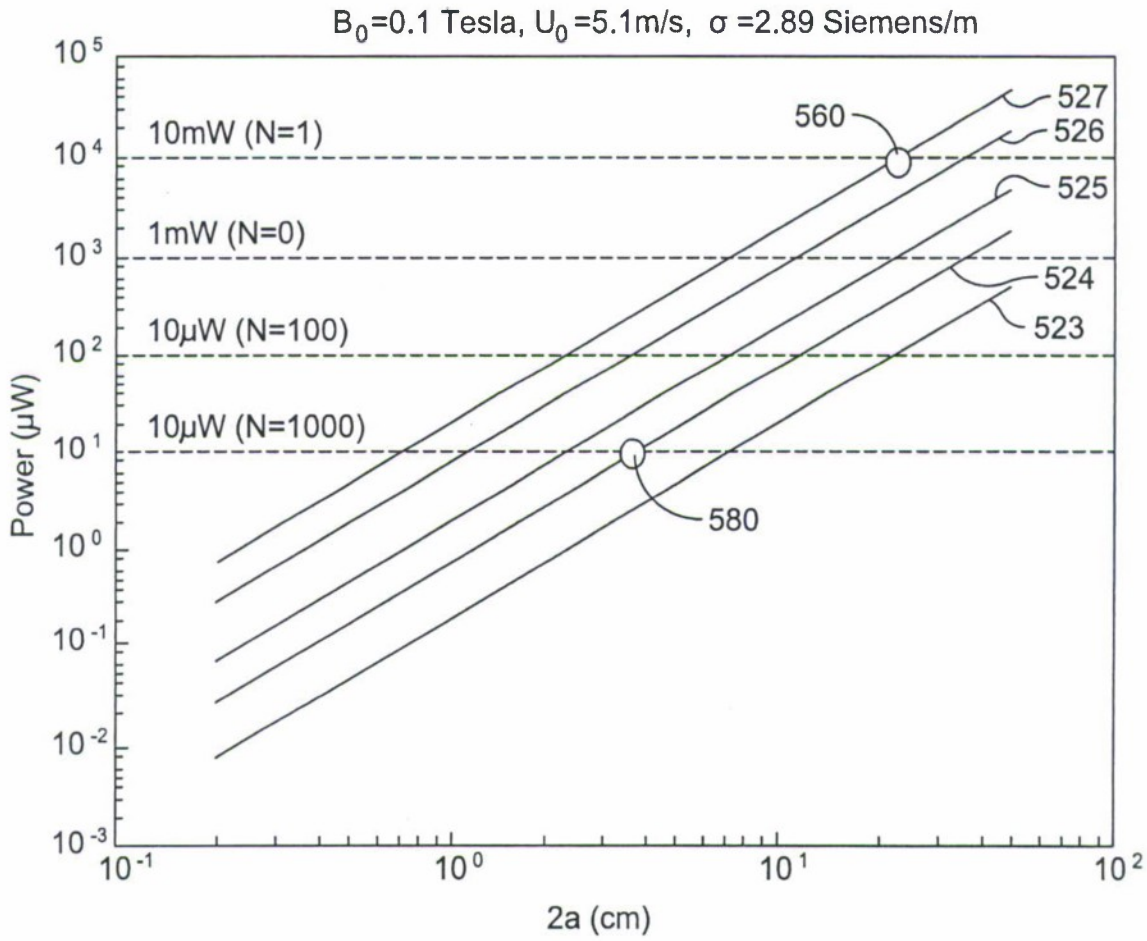
B0=0.1 Tesla, U0 =5.1m/s, σ =2.89 Siemens/m
10mW (N=1)
1mW (N=0)
10μW (N=100)
10μW (N=1000)
560
580
527
526
525
524
523
Power (μW)
2a (cm)
10 5
10 4
10 3
10 2
10 1
10 0
10 -1
10 -2
10 -3
10 -1
10 0
10 1
10 2

FIG. 5c

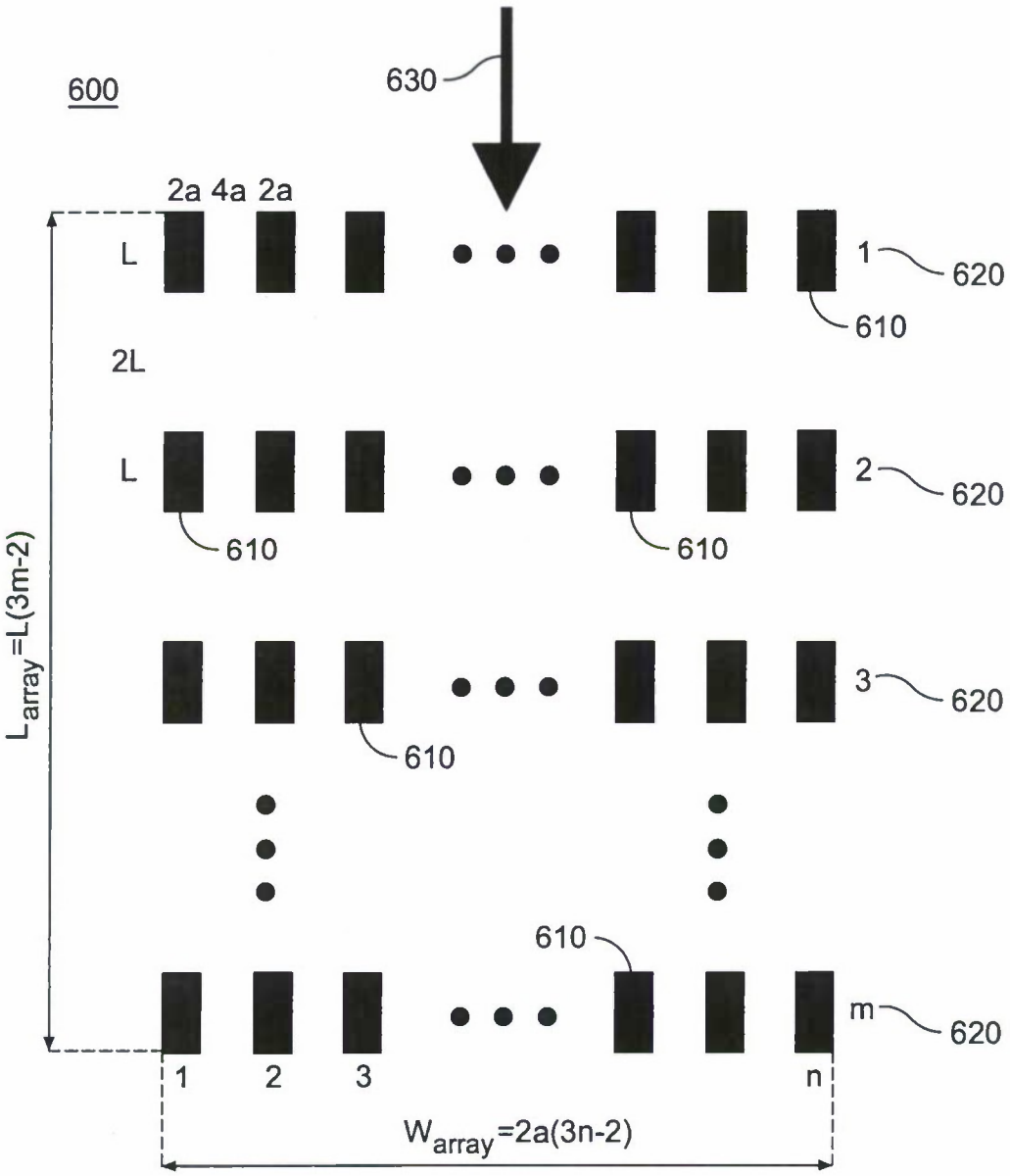

Electro-magneto-hydro-dynamic power harvesting array;
L = total array length, and W=total array width

FIG. 6

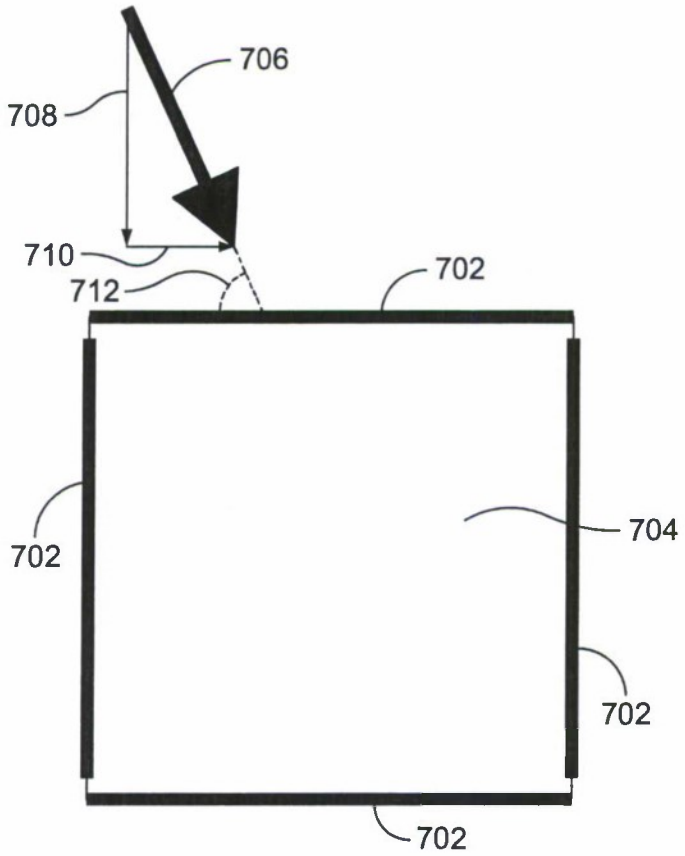

Cross flow element utilizing orthogonal electrode configuration

FIG. 7