NAVSEA
WARFARE CENTERS
NEWPORT

DEPARTMENT OF THE NAVY
NAVAL UNDERSEA WARFARE CENTER
DIVISION NEWPORT
OFFICE OF COUNSEL
PHONE: 401 832-3653
FAX: 401 832-4432
DSN: 432-3653

Attorney Docket No. 99907
Date: 9 June 2010

The below identified patent application is available for licensing. Requests for information should be addressed to:

TECHNOLOGY PARTNERSHIP ENTERPRISE OFFICE
NAVAL UNDERSEA WARFARE CENTER
1176 HOWELL ST.
CODE 07TP, BLDG. 990
NEWPORT, RI 02841

Serial Number 12/781,147

Filing Date 17 May 2010

Inventor David A. Tonn

Address any questions concerning this matter to the Office of Technology Transfer at (401) 832-1511.

DISTRIBUTION STATEMENT
Approved for Public Release
Distribution is unlimited

20100611019

Attorney Docket No. 99907

HYBRID CABLE ANTENNA FOR HIGH FREQUENCY BAND

STATEMENT OF GOVERNMENT INTEREST

[0001] The invention described herein may be manufactured and used by or for the Government of the United States of America for governmental purposes without the payment of any royalties thereon or therefor.

[0002]

CROSS REFERENCE TO OTHER PATENT APPLICATIONS

[0003] None.

BACKGROUND OF THE INVENTION

(1) **Field of the Invention**

[0004] The present invention relates generally to cable antennas, and more particularly to a buoyant cable antenna that operates through out the entire high frequency band.

(2) **Description of the Prior Art**

[0005] Buoyant cable antennas are generally used for submarine communication when a submarine is submerged below periscope depth. Currently, separate antennas are generally used for separate communications frequency bands. A more broadband buoyant cable antenna known as the legacy antenna achieves a compromise between very low frequency/low frequency (VLF/LF) performance and high

frequency (HF) performance. However, when HF performance is important, the HF gain provided by the legacy antenna is frequently inadequate.

SUMMARY OF THE INVENTION

[0006] Accordingly, it is an object of the present invention to provide a buoyant cable antenna for operation throughout the entire high frequency band.

[0007] Another object of the present invention is to provide a buoyant cable antenna whose gain can be readily optimized across the entire high frequency band.

[0008] Other objects and advantages of the present invention will become more obvious hereinafter in the specification and drawings.

[0009] In accordance with the present invention, a buoyant cable antenna for operation in the high frequency band has a first cable antenna that is buoyant and unloaded for operation in a lower portion of the high frequency band. At least one second cable antenna is serially and electrically coupled to the first cable antenna. Each second cable antenna is buoyant and capacitively loaded for operation in a portion of the high frequency band that is above the lower portion of the high frequency band handled by the first cable antenna.

BRIEF DESCRIPTION OF THE DRAWINGS

[0010] Other objects, features and advantages of the present invention will become apparent upon reference to the following description of the preferred embodiments and to the drawings, wherein corresponding reference characters indicate corresponding parts throughout the several views of the drawings and wherein:

[0011] FIG. 1 is a schematic view of a hybrid buoyant cable antenna for the high frequency band in accordance with an embodiment of the present invention;

[0012] FIG. 2 is a cross-sectional view of the unloaded section of the antenna;

[0013] FIG. 3 is a cross-sectional schematic view of a loaded section of the antenna;

[0014] FIG. 4 is a schematic view of a hybrid buoyant cable antenna for the high frequency band in accordance with another embodiment of the present invention; and

[0015] FIG. 5 is a cross-sectional schematic view of a serial arrangement of loaded sections of the antenna in accordance with another embodiment of the present invention.

DETAILED DESCRIPTION OF THE INVENTION

[0016] Referring now to the drawings and more particularly to FIG. 1, a hybrid buoyant cable antenna capable of operation throughout the entire high frequency band is shown and is referenced generally by numeral 10. The term "high frequency

band" as used herein refers to the frequency band that is generally accepted to range from approximately 3 MHz to approximately 30 MHz as is well known in the art. However, it is to be understood that the term "high frequency band" also applies to frequency band definitions extending to frequencies below/above the generally-accepted 3-30 MHz range limits.

[0017] Buoyant cable antenna 10 is capable of functioning as several separate antennas each in its own frequency range by virtue of having multiple antenna sections. These sections include an unloaded section 20 that operates in a lower portion of the high frequency band and one or more loaded sections 30 that operate in corresponding one or more upper portions of the high frequency band. As will be explained further below, buoyant cable antenna 10 has no active devices and can be used to receive or transmit signals in the high frequency band. Accordingly, buoyant cable antenna 10 will be coupled to transmission and/or reception electronics 100, the particular design of which is not a limitation of the present invention. Unloaded section 20 is located closest to electronics 100 with loaded section(s) 30 being serially coupled to unloaded section 20.

[0018] Since buoyant cable antenna 10 will typically be deployed from a sea-going vessel, buoyant cable antenna 10 is made to be buoyant. Further, since buoyant cable antenna 10 is typically stored and deployed from a reel, buoyant cable antenna 10 must be flexible. Accordingly, embodiments of buoyant cable

antenna 10 described herein will present constructions having both buoyant and flexible attributes.

[0019] Referring now to FIG. 2, an embodiment of unloaded section 20 is illustrated. More specifically, unloaded section 20 is defined by a length L_1 of a flexible, buoyant and electronically-insulting jacket 22 that completely encases a single conducting wire 24 along its length. Jacket 22 can be made from a variety of suitable materials, such as polyethylene foam, or other closed cell foams. Wire 24 can be any electrically-conductive material such as copper or silver. The length L_1 of unloaded section 20 is chosen/manipulated based on a desired gain profile for buoyant cable antenna 10. In general, length L_1 is selected such that unloaded section 20 does not interfere with loaded section(s) 30.

[0020] FIG. 3 illustrates an embodiment of a single loaded section 30. More specifically, loaded section 30 includes a length L_2 of a flexible, buoyant and electronically-insulting jacket 32 (e.g., polyethylene foam) that defines a hollowed-out passage 34 along its length and is sealed at either end 34A/34B thereof. Fitted in passage 34 is a capacitively-loaded antenna 36. In the present invention, capacitively-load antenna 36 is defined by an arrangement of equal-capacitance capacitors 38 that are connected in a serial fashion with the physical distance "d" between adjacent capacitors 38 being the same. The length L_2 of loaded section 30, capacitance value "C" of capacitors 38, and

separation distance d, are all chosen/manipulated based on the desired gain profile for buoyant cable antenna 10. There are a variety of methods for choosing/manipulating the design parameters of loaded section 30. For example, one skilled in the art would readily be able to derive a suitable gain formulae for choosing/manipulating the design parameters of loaded section 30.

[0021] Since unloaded section 20 and loaded section(s) 30 operate at different portions of the high frequency band, it may be desirable to separate and electronically connect them using a bandpass filter designed to pass/block the relevant frequencies. Accordingly, FIG. 4 illustrates another embodiment of the present invention where a bandpass filter 40 electrically connects loaded section 20 to loaded section(s) 30. Such bandpass filters and their construction are well understood in the art.

[0022] In its simplest embodiment, buoyant cable antenna 10 has one unloaded section 20 covering a lower portion of the high frequency band and one loaded section 30 covering the remaining/upper portion of the high frequency band. However, in order to optimize the buoyant cable antenna in its various operating frequency ranges, it may be desirable to design and construct the buoyant cable antenna with multiple loaded sections 30. In this type of embodiment, each loaded section is optimized for a portion of the high frequency band where each portion defines a unique and non-overlapping range of frequencies that is greater than that covered by unloaded section 20. For example,

FIG. 5 illustrates an embodiment of the present invention that includes two loaded sections 30A and 30B. It is to be understood that additional capacatively loaded sections could be added in serial fashion without departing from the scope of the present invention.

[0023] Loaded section 30A is optimized for a portion of the high frequency band (above the lower portion thereof defined by unloaded section 20) by manipulating the section's length "L_A" capacitor spacing "d_A," and capacitance value "C_A." Similarly, loaded section 30B is optimized for its portion of the high frequency band (also above the lower portion thereof defined by unloaded section 20) by manipulating the section's length "L_B," capacitance spacing "d_B," and capacitance value "C_B." In addition, sections 30A and 30B are designed such that the range of frequencies defined thereby increases with distance from unloaded section 20 so that the highest portion of the high frequency band is handled by the loaded section that is furthest from unloaded section 20. Since each of loaded sections 30A and 30B is designed/optimized for a particular frequency range, loaded sections 30A and 30B could also be separated/coupled by a bandpass filter 50.

[0024] The advantages of the present invention are numerous. A single hybrid cable antenna can be designed and optimized for the entire high frequency band with each section being optimized for a portion of the high frequency band. The divisions between

the unloaded and loaded section(s) can also be used to provide a shunt path connection for VLF/LF transmission/reception of signals through the water.

[0025] It will be understood that many additional changes in the details, materials, steps and arrangement of parts, which have been herein described and illustrated in order to explain the nature of the invention, may be made by those skilled in the art within the principle and scope of the invention as expressed in the appended claims.

Attorney Docket No. 99907

HYBRID CABLE ANTENNA FOR HIGH FREQUENCY BAND

ABSTRACT OF THE DISCLOSURE

A hybrid cable antenna includes a first cable antenna that is buoyant and unloaded for operation in a lower portion of the high frequency band. At least one second cable antenna is serially and electrically coupled to the first cable antenna. Each second cable antenna is buoyant and loaded for operation in a portion of the high frequency band that is above the lower portion of the high frequency band.

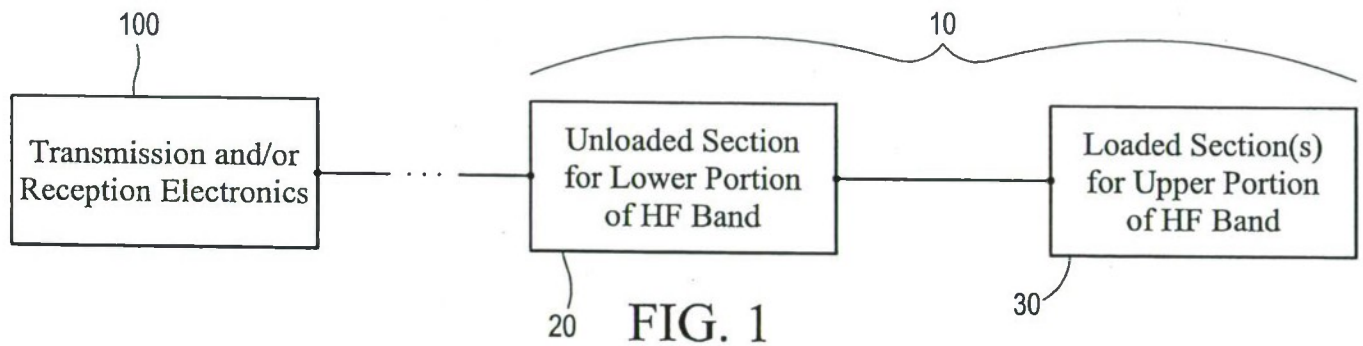

FIG. 1

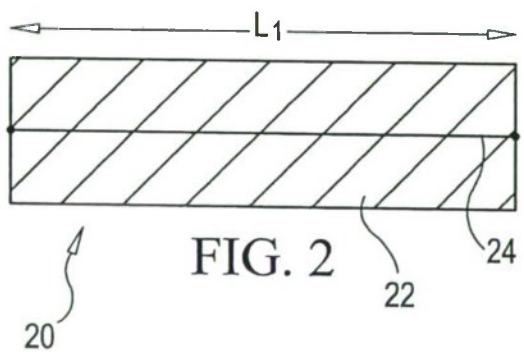

FIG. 2

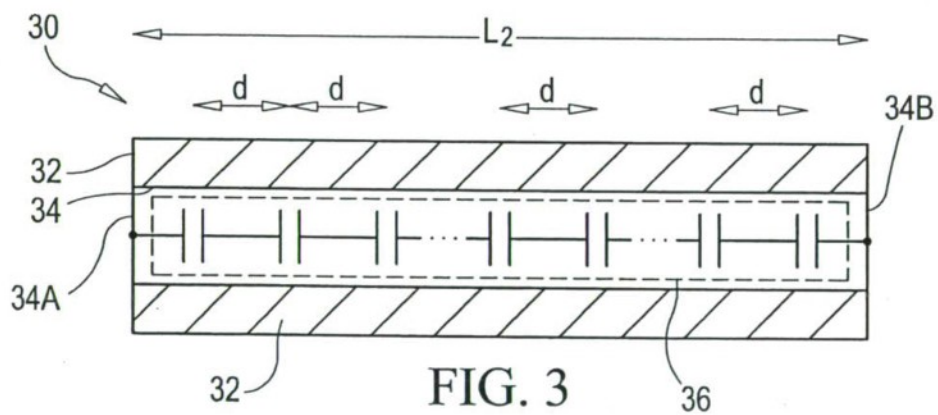

FIG. 3

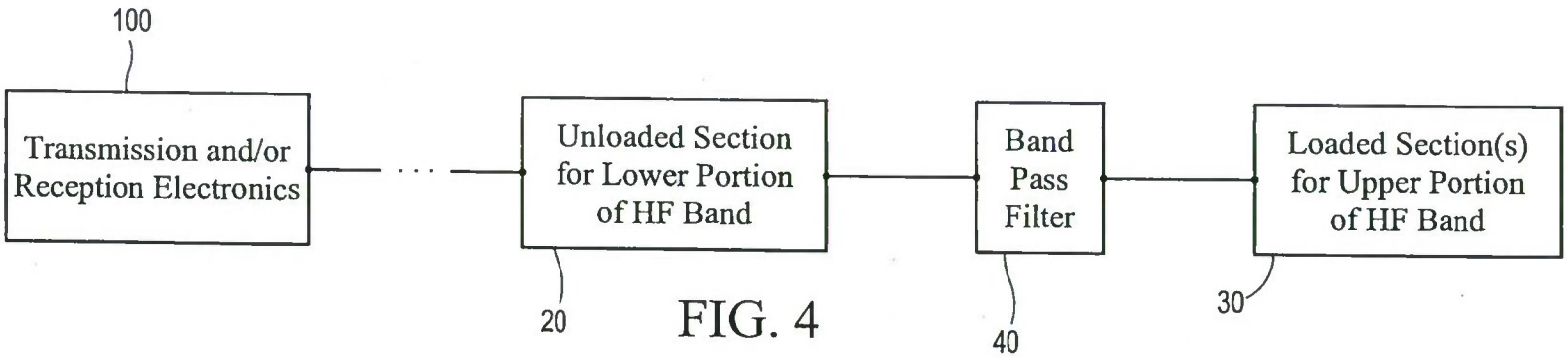
100
Transmission and/or Reception Electronics
Unloaded Section for Lower Portion of HF Band
Band Pass Filter
Loaded Section(s) for Upper Portion of HF Band
20
40
30

FIG. 4

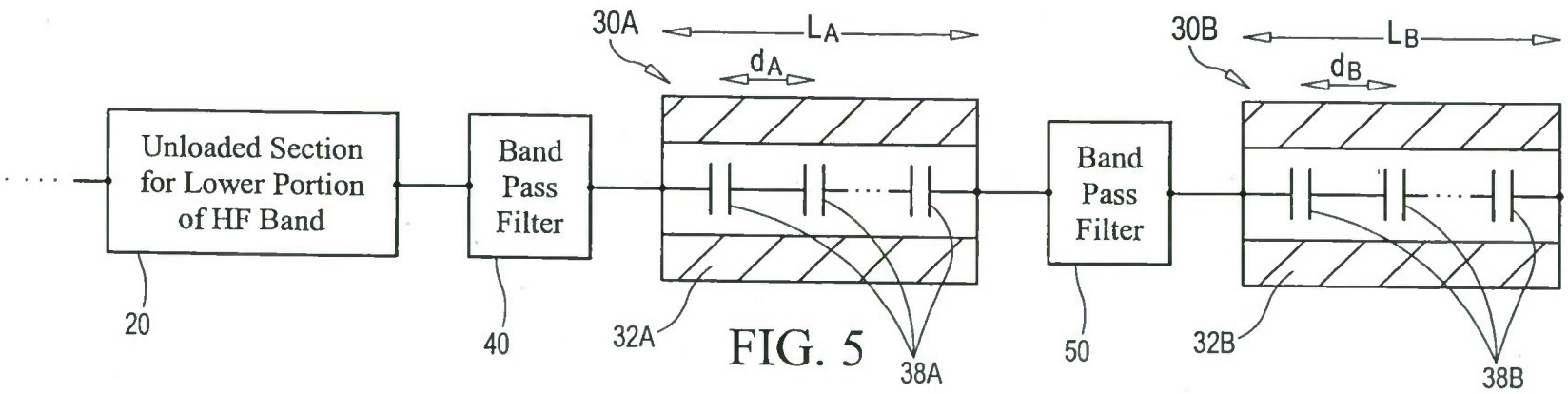
30A
L_A
d_A
30B
L_B
d_B
Unloaded Section for Lower Portion of HF Band
Band Pass Filter
Band Pass Filter
20
40
32A
38A
50
32B
38B

FIG. 5