NAVSEA
WARFARE CENTERS
NEWPORT

**DEPARTMENT OF THE NAVY**
**NAVAL UNDERSEA WARFARE CENTER**
**DIVISION NEWPORT**
**OFFICE OF COUNSEL**
PHONE: 401 832-3653
FAX: 401 832-4432
DSN: 432-3653

Attorney Docket No. 83956
Date: 1 April 2010

The below identified patent application is available for licensing. Requests for information should be addressed to:

TECHNOLOGY PARTNERSHIP ENTERPRISE OFFICE
NAVAL UNDERSEA WARFARE CENTER
1176 HOWELL ST.
CODE 07TP, BLDG. 990
NEWPORT, RI 02841

Serial Number 12/383,080

Filing Date 13 March 2009

Inventor Michael J. Josypenko

Address any questions concerning this matter to the Office of Technology Transfer at (401) 832-1511.

20100406019

DISTRIBUTION STATEMENT
Approved for Public Release
Distribution is unlimited

Attorney Docket No. 83956

# MULTI-ELEMENT PATCH ANTENNA AND METHOD

## STATEMENT OF GOVERNMENT INTEREST

**[0001]** The invention described herein may be manufactured and used by or for the Government of the United States of America for governmental purposes without the payment of any royalties thereon or therefore.

## CROSS REFERENCE TO OTHER PATENT APPLICATIONS

**[0002]** None.

## BACKGROUND OF THE INVENTION

(1) Field of the Invention

**[0003]** The present invention relates generally to patch antennas. In one possible embodiment, the present invention may provide an antenna comprising a plurality of two-dimensional driven elements, such as, for example, circular stacked disks.

(2) Description of the Prior Art

**[0004]** Yagi Uda antenna arrays are well known for use with a dipole radiating element. For example, Yagi antenna arrays are described in "Antenna Engineering', WL Weeks, McGraw-Hill Book Company, 1968, p. 196-198. The Yagi Uda antenna array provides unidirectionality of the normally nondirectional dipole by

placing wire elements in the plane of the dipole and parallel to the dipole. However, a straight dipole radiating element may not always be desirable for many applications. In a Yagi antenna, the distance between the reflector and the radiating element may significantly increase the size of the antenna. As well, the mechanical instability and electrical characteristics of a traditional Yagi Uda antenna with a boom for director and reflector elements may not be desirable for many applications.

**[0005]** In a Yagi antenna, a reflector wire slightly longer than 1/2 wavelength is placed on one side of the dipole to reflect energy backside towards the dipole. On the opposite side of the dipole are placed 1 or more equally spaced director wire elements, each slightly less than 1/2 wavelength long. These act the opposite of a reflector, causing radiation of the dipole to be directed toward the directors. The resulting effects of all added elements causes the dipole pattern to become more unidirectional in the direction of the directors. The narrow beam occurs over perhaps a 15% bandwidth about the half wavelength frequency of the dipole. Weeks gives the dimensions and locations of the added elements as follows: dipole length - 0.5 wavelengths; reflector length - .51 to .52 wavelengths; director length -.38 to .48 wavelengths; separation between adjacent elements, where an element can be a dipole, reflector, or director -.05 to .15 wavelengths. The number of directors may

vary, and directivity increases with increased number of directors.

**[0006]** The following U.S. Patents describe various prior art antennas:

U.S. Patent No. 5,307,075, issued April 26, 1994, to Huynh, discloses a monolithically loaded microstrip antenna for a communications function, such as a cellular telephone base station. The antenna includes a ground plane and a group of stacked, planar elements. A director element having a rectangular configuration together with monolithic load tabs is connected to a feed line and spaced above the ground plane. A first director element is spaced above the driven element and has lesser length and width dimensions than the driven element. A second director element is spaced above the first director element and likewise has lesser length and width dimensions than the driven element. A group of eight of the antennas are positioned in a column to form an antenna array which has substantial vertical polarization, a relatively wide horizontal beam width, approximately 60 degrees and a relatively narrow vertical beam width, approximately 8.0 degrees. The antenna array has a center frequency of 885 MHz and a bandwidth of approximately 230 MHz.

**[0007]** As best as can be determined from a review of U.S. Patent No. 5,307,075, the group of eight antennas may use feed lines implemented on microstrip circuitry although the driven elements do not appear to comprise either dielectric material or

the groundplane found on microstrip circuit board, whereby the spacing between the groundplane and the first driven element is greater than the spacing between the driven element and the first parasitic element.

**[0008]** U.S. Patent No. 4,118,706, issued October 3, 1978, to Kerr, discloses a multi-director parasitic array attached at the center of a microstrip.

**[0009]** U.S. Patent No. 3,508,278, issued April 21, 1970, to Ehrenspeck, discloses a directional antenna system in the form of a combination of a cavity type antenna and a slow wave endfire antenna to provide a slow wave structure energized by a feed in the form of a cavity radiator.

**[0010]** The above cited prior art does not disclose a relatively high gain and high directivity patch antenna with a two-dimensional driven element positioned on an opposite side of a dielectric board from a ground plane, where the closely positioned ground plane is utilized as a reflector, and wherein one or more parasitic elements are smaller than the driven element. The prior art also does not disclose the above features for use in a circularly polarized antenna with two feedlines, and/or adjustment features to provide an input impedance that may be adjusted for a wavelength of operation, and/or which may be based on advantageous use of circular two dimensional driven element and/or antenna director elements which, at least in some ways, may utilize a Yagi antenna configuration. Consequently,

those skilled in the art will appreciate the present invention that provides the above and other features and/or addresses the above and other problems.

## SUMMARY OF THE INVENTION

**[0011]** It is a general purpose of the present invention to provide an improved patch antenna.

**[0012]** An object of the present invention is to provide a higher gain, more directive patch antenna.

**[0013]** Another object of the present invention is to provide an easily manufactured and sturdy microstrip patch antenna with multiple elements.

**[0014]** Accordingly, the present invention may comprise a board, such as a circuit board or the like, of dielectric material with a ground plane formed on a first side. The ground plane may preferably be a two-dimensional electrically conductive surface. A driven antenna element may be formed on a second side of the board of dielectric material. In one embodiment, the driven electrically conductive element may be smaller in surface area than the ground plane. At least one parasitic antenna element may be mounted coaxial with and spaced apart from the driven antenna element at an offset distance. In one embodiment, the offset distance may be greater than the thickness of the dielectric material. The parasitic element may comprise a

maximum dimension less than a maximum dimension of the driven antenna element.

**[0015]** The patch antenna may further comprise a first feed cable connected to a first position on the two-dimensional electrically conductive surface of the driven antenna element and/or a second feed cable connected to a second position on the two-dimensional electrically conductive surface of the driven antenna element.

**[0016]** In one possible embodiment, the offset distance may be from 0.05 to 0.15 wavelengths for a frequency of operation of the patch antenna. The thickness of the board of dielectric material may be less than 0.05 wavelengths or smaller. The parasitic element maximum dimension may be less than one-half wavelength. In one embodiment, the driven antenna element may be circular and/or the parasitic element(s) may be circular. The two-dimensional electrically conductive surface of the ground plane may be rectangular with a maximum dimension of at least one wavelength. The ground plane has no maximum width. Its minimum width must be at least that of the driven element and usually greater. In one possible embodiment, a plurality of equal size parasitic antenna elements may be mounted to the antenna and spaced apart by the offset distance.

**[0017]** The patch antenna may be configured to provide a selected antenna input impedance based upon the offset distance between the driven element and a first of the plurality of

parasitic element(s) or the offset distance between at least two parasitic elements.

**[0018]** The present invention may also comprise methods such as a method for making a patch antenna. In one embodiment, method steps might comprise providing that a ground plane is positioned on a first side of a board of dielectric material and/or forming a driven antenna element on a second side of the board of dielectric material whereby the driven antenna element comprises an area smaller than the ground plane. The method might comprise positioning at least one parasitic antenna element coaxial with and spaced apart from the driven antenna element at an offset distance. In one embodiment, the offset distance may be greater than a thickness of the dielectric material. Other steps might comprise providing that parasitic antenna element(s) may comprise a maximum dimension less than a maximum dimension of the driven antenna element.

**[0019]** In one possible embodiment, the method might comprise configuring the patch antenna to transmit a circularly polarized signal, which requires two feed points separated by ninety degrees around the patch circumference and ninety degrees in phase. In another embodiment, the method may comprise providing that the offset distance may be from 0.05 to 0.15 wavelengths for a selected frequency of operation of the antenna and/or providing that the thickness of the dielectric material may be less than

0.05 wavelengths and/or providing that the parasitic element maximum dimension may be less than one-half wavelength.

**[0020]** The method may comprise forming the driven antenna element in a circular configuration and/or forming the at least one parasitic element in a circular configuration. In one embodiment, the method may comprise forming the two-dimensional electrically conductive surface of the ground plane in a rectangular configuration with a maximum dimension of at least one wavelength. In another embodiment, the method may comprise providing a plurality of equal size parasitic antenna elements and/or spacing the plurality of parasitic antenna elements apart by the offset distance.

**[0021]** In yet another embodiment, the method might comprise providing a selected antenna input impedance of the patch antenna by adjusting the offset distance between the driven element and a first of the plurality of parasitic elements and/or by adjusting the offset distance between at least two of the parasitic elements.

## BRIEF DESCRIPTION OF THE DRAWINGS

**[0022]** A more complete understanding of the invention and many of the attendant advantages thereto will be readily appreciated as the same becomes better understood by reference to the following detailed description when considered in conjunction with the accompanying drawings, wherein like reference numerals refer to like parts and wherein:

**[0023]** FIG. 1 is a top view of a patch antenna in Yagi configuration in accord with one possible embodiment of the present invention; and

**[0024]** FIG. 2 is a side view, partially in section, of a patch antenna in Yagi configuration in accord with a possible embodiment of the present invention.

## DETAILED DESCRIPTION OF THE INVENTION

**[0025]** Referring now to the drawings and more specifically to FIG. 1 and FIG. 2, there is shown patch antenna 10, which may advantageously incorporate certain features of a traditional Yagi Uda one-dimensional dipole array antenna for use with a patch antenna configuration comprising two-dimensional elements, i.e., conductive plates or surfaces, rather than the one-dimensional elements such as rods and wires used in a traditional Yagi Uda array antenna.

**[0026]** Patch antenna 10 may comprise a dielectric layer 12 with a ground plane 26 of metallic material formed thereon. In one possible embodiment, ground plane 26 is a metallic plate, i.e., a two-dimensional member rather than a single wire as in a standard Yagi antenna array. Dielectric layer 12 may comprise a circuit board or the like wherein ground plane 26 is formed on one side of the board and a patch antenna element, such as circular patch 14, may be etched or otherwise created or formed on an opposite side of the board of dielectric material. The

thickness of the dielectric layer 12 is much less than the spacing between the reflector(s) and driven element of a standard Yagi antenna. As suggested in FIG. 1, ground plane 26 may be square. In this embodiment, ground plane 26 may have a side equal to one wavelength or larger. However, in some embodiments of the invention, this distance may be smaller, but is preferably still larger than the maximum dimension or diameter of the patch antenna, such as circular patch 14, so that ground plane 26 acts as a reflector rather than a director. In other embodiments, other shapes for the ground plane might also be utilized, such as a circular ground plane.

**[0027]** Circular patch 14, shown in FIG. 1 and FIG. 2, may be formed as a two-dimensional circular metallic patch, which may have a diameter of one-half wavelength. While in reality any structure is a three-dimensional structure, the embodiment of circular patch 14 as a plate-like metallic disk may have a top or bottom surface area that is sufficiently large as compared to the thickness of circular patch 14 such that the thickness may be disregarded as a practical matter. The circular patch 14 embodiment of the patch is therefore considered to be two-dimensional, as used within this description. As discussed above, the traditional Yagi antenna includes straight wires or rods and is considered herein to comprise one-dimensional elements, with only the lengths thereof being of main consideration. If circular patch 14 were formed in a wire-like

fashion as a circular wire, then it would then be referred to as a one-dimensional antenna element. In one embodiment of the invention, circular patch 14 may comprise a diameter equal to one-half wavelength of the desired frequency of operation. Accordingly, in one possible embodiment of the invention, circular patch 14 comprises a two-dimensional metallic element.

**[0028]** Circular patch 14 must be separated from ground plane 26. The separation may be by the thickness of dielectric layer 12, which may be, in one possible embodiment equal to 1/48 wavelength, which is much smaller than the distance between reflector and driven element than in a traditional Yagi antenna. However, variations of this size may be utilized depending on the type of dielectric material and/or other design considerations. As one possible example, if the wavelength of antenna operation is equal to twelve inches for use with a twelve inch per side square for ground plane 26, then dielectric layer 12 may be one-quarter inch thick.

**[0029]** Referring to FIG. 2, antenna 10 may be fed by a coaxial cable with center conductor 28 protruding through (and being insulated from) ground plane 26 and electrically connecting to an edge of circular patch 14. In this embodiment, outer conductor 30 must stop at and be electrically connected to ground plane 26.

**[0030]** Above circular patch 14, i.e., on the opposite side from dielectric layer 12, and positioned on the axis of the circular patch 14, and parallel to circular patch 14 are arranged

a variable number of metallic director elements, namely directors 16, 18, 20, 22, and 24. In one preferred embodiment, the metallic director elements may be circular and may also be two-dimensional, i.e., circular metallic plates or disks. In this particular configuration, five directors are shown although this number may vary. In this embodiment, directors 16, 18, 20, 22, and 24 are shown in FIG. 2. In this embodiment, because the directors are the same size and coaxial with each other and circular patch 14, only director 24 is visible in the top view of FIG. 1. By coaxial, it is meant that a line perpendicular to circular patch 14 goes through the center of circular patch and through the center of directors 16, 18, 20, 22, and 24. In another possible embodiment, directors 16, 18, 20, 22, and 24 may be coaxial but also vary in size. For example, directors 16, 18, 20, 22, and 24 might decrease in size with distance away from circular patch 14.

**[0031]** In one embodiment, the width or diameter of the directors may be slightly smaller than one-half wavelength. The separation between adjacent directors and/or between the director 16 and circular patch 14 may be 0.1 wavelengths. Variations of these distances or sizes may also be consistent with or similar to the ranges of variation of values disclosed hereinbefore in the general discussion of the Yagi antennas hereinbefore, for example, 0.05 to 0.15 wavelengths.

**[0032]** In operation, a patch antenna radiates normally with an overhead cardoid shaped pattern. Directors 16, 18, 20, 22 cause the pattern to narrow and thus increase in gain on the antenna axis. For comparison purposes, an embodiment of patch antenna 10 has been modeled for cases of 0 to 5 directors, where 0 directors is the patch antenna by itself. This embodiment of antenna 10 was also modeled so that the antenna wavelength dimensions discussed above occur at 1 GHz. At 1050 MHz, overhead gains for all antenna cases are the same. Below this frequency, where the directors act as directors, gain with directors is above that of the patch antenna by itself, and gain increases with the number of directors. For example, with 5 directors, a 3 db increase is seen over that of the normal patch. Patterns at 900 MHz also show narrowing as more directors are added to the antenna. Above 1050 MHz, the directors have become too wide and are starting to act as reflectors, and actually start reducing overhead gain of the normal patch antenna.

**[0033]** In this example, the gain of the patch itself increases with frequency above 1050 MHz, where the directors cease being directors. Accordingly, for maximum gain, the added few db of gain due to the directors should be placed where the patch gain is to be maximum, which in this example is at approximately 1200 MHz. Thus, the diameter of the directors may be reduced somewhat as compared to the above described dimensions, so they still act as directors at 1200 MHz.

**[0034]** Continuing with the above example, the modeled impedances of the antenna may also be plotted, for example, on Smith charts. In one possible embodiment, the patch, such as circular patch 14 without the directors, radiates a unidirectional cardoid shaped pattern with an element mounted against a ground plane. Ground plane 26 causes the pattern to be unidirectional on the side of the patch opposite the ground plane by being a two-dimensional planar reflector. However, the spacing of the reflector element, i.e., ground plane 26 is quite different from that of a Yagi antenna.

**[0035]** In one possible embodiment of the present invention, directors to improve directivity must be used with the driven element circular patch 14 by placing two-dimensional, circular directors on the unidirectional pattern side of the patch, such as such as directors 16, 18, 20, 22, and 24. In this embodiment, directors 16, 18, 20, 22, and 24 may comprise two dimensional elements, i.e., plates or disks, as opposed to the one-dimension wire or rod of the Yagi array since the radiating patch occupies two dimensions. The patch is a wide radiating structure, thus wide directors will have more effect on the patch. In a manner similar to two-dimensional reflectors having more reflectivity than one-dimensional reflectors, two-dimensional directors may have more directivity than one-dimensional, wire directors.

**[0036]** In summary, the effects of adding directors to circular patch 14 are:

-bandwidth decreases largely with the addition of directors;

-parasitic resonance / antiresonance loops are introduced in the antenna's impedance locus, because the director(s) are parasitic elements.

**[0037]** Matching the antenna at a desired frequency would involve adjusting steps such as

- adjusting the number of directors; and/or

- adjusting the separation between directors 16-24 or first director 16 and circular patch 14. This would effect how tightly coupled at least first director 16 is to circular patch 14, and would be one of the factors determining the depth of the parasitic loop in the main impedance locus of patch antenna 10; and/or

- adjusting the relative width of circular patch 14 and directors 16-24. This is another factor determining the depth of the parasitic loop. Normally a loop will disappear if the patch and its parasite have the same resonance frequency; and/or

- adjusting the location of the feedpoint.

**[0038]** It may be desirable to use one of the parasitic loops and try to move it to50 ohms for matching, if it occurs at a frequency where patterns are more directive with directors. Thus, it is concluded that the addition of two-dimensional circular directors 16-24 to circular patch 14 increases the directivity of patch antenna 10, although the amount of increase may not be large. However, the directors may cause a loss of

impedance bandwidth and introduce parasitic loops in the antenna impedance, all of which must be taken into account when matching patch antenna 10.

**[0039]** In another possible embodiment, a second feed cable 32 fed in phase ninety degrees from cable 30 can be connected to the patch oriented ninety degrees around circular patch 14 from the connection point of inner conductor 28 on circular patch 14 discussed hereinbefore. The connection point of inner conductor 28 can be anywhere between center 32 the edge of circular patch 14. In this embodiment, circular polarization can be obtained from patch antenna 10. Because directors 16, 18, 20, 22, and 24 may occupy two dimensions and are symmetrical in the plane perpendicular to the direction of radiation (the antenna axis), the planar orientation of a radiating linear source parallel to the directors is unimportant. Accordingly, regardless of the type of polarization, the directors will always act as directors.

**[0040]** Although a loss of some advantages discussed hereinbefore may occur, in another possible embodiment, circular patch 14 may be replaced with a rectangular patch, with similar resultant sharper patterns, subject to the restriction that the patch should not become much wider than the directors.

**[0041]** In yet another embodiment, the two-dimensional directors 16, 18, 20, 22, and/or 24 might be replaced with one or more one-dimensional wire directors 24A, as indicated in dash in FIG. 1. In this case the maximum dimension of the directors

would be the length of the one-dimensional wire director(s) 24A instead of the original diameter. In this case, the directivity effects of the directors may be severely reduced because the wire is much narrower than the patch. Therefore, a given single wire director may be replaced with a series of wire directors lying spaced apart from each other and parallel to each other in a plane of the same planar orientation and of roughly the same width of the original circular director. All wires would lie parallel to the polarization of the patch. However, the maximum length of any particular one-dimensional wire would be less than the diameter, i.e., the maximum dimension of circular patch 14.

**[0042]** The elements may be mounted in different ways, as desired. Instead of air, dielectric material may be utilized as layers 27 such as PTFE or the like, or low-loss honey comb material molded or cut to the desired dimensions. If layers 27 are solids, then the antenna may be held together by adhesives. The entire assembly may also comprise a weather cover or other coating, as desired. Some adjustment of the spacing may be necessary in the different materials to account for different dielectric constants. Note that the supports may simply be tubular dielectric material rather than solid to provide that air is the effective material of layers 27. Accordingly, the present invention provides a sturdy arrangement of components arranged in accord to take advantage of some benefits that have been derived from Yagi one-dimensional antenna arrays.

**[0043]** Many additional changes in the details, components, steps, and organization of the system, herein described and illustrated to explain the nature of the invention, may be made by those skilled in the art within the principle and scope of the invention. It is therefore understood that within the scope of the appended claims, the invention may be practiced otherwise than as specifically described.

Attorney Docket No. 83956

**MULTI-ELEMENT PATCH ANTENNA AND METHOD**


ABSTRACT OF THE DISCLOSURE

A patch antenna with a driven antenna formed on a board of dielectric material on an opposite side thereof from a ground plane. The driven electrically conductive element is smaller in surface area than the ground plane. Parasitic antenna element(s) that function as directors are mounted coaxial with and spaced apart from the driven antenna element at an offset distance. In one possible embodiment, the offset distance may be greater than the thickness of the dielectric material and/or the parasitic element may comprise a maximum dimension (slightly less than one half wave length) less than a maximum dimension of the driven antenna element.

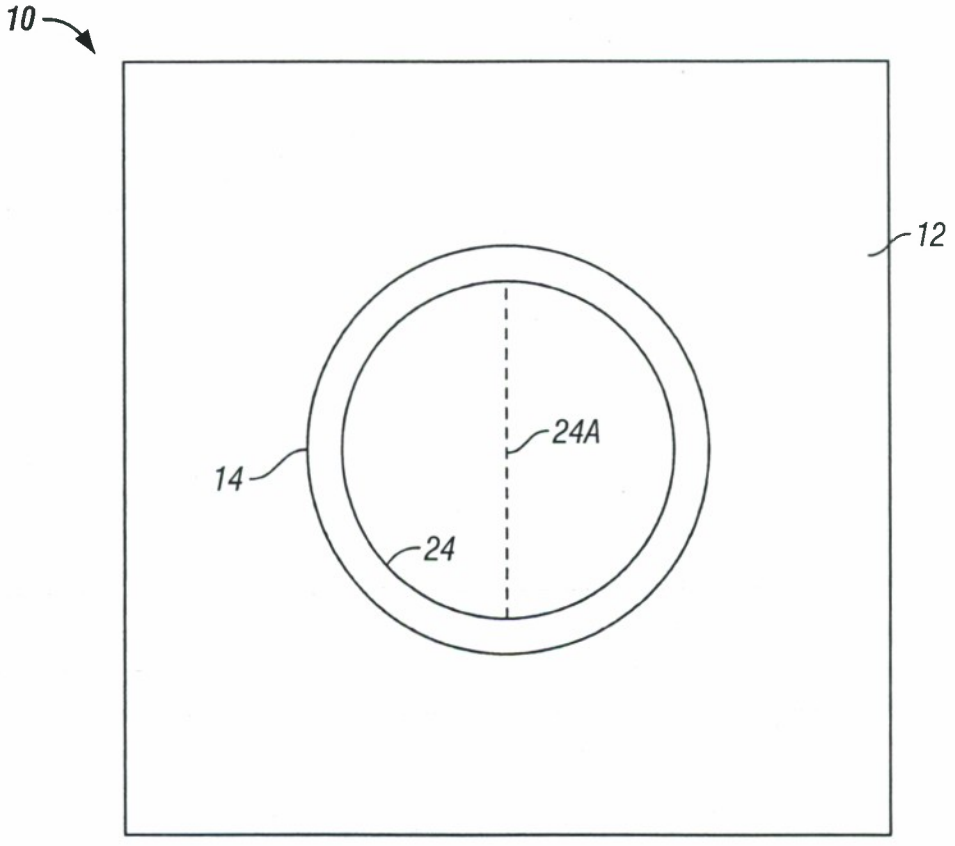


FIG. 1

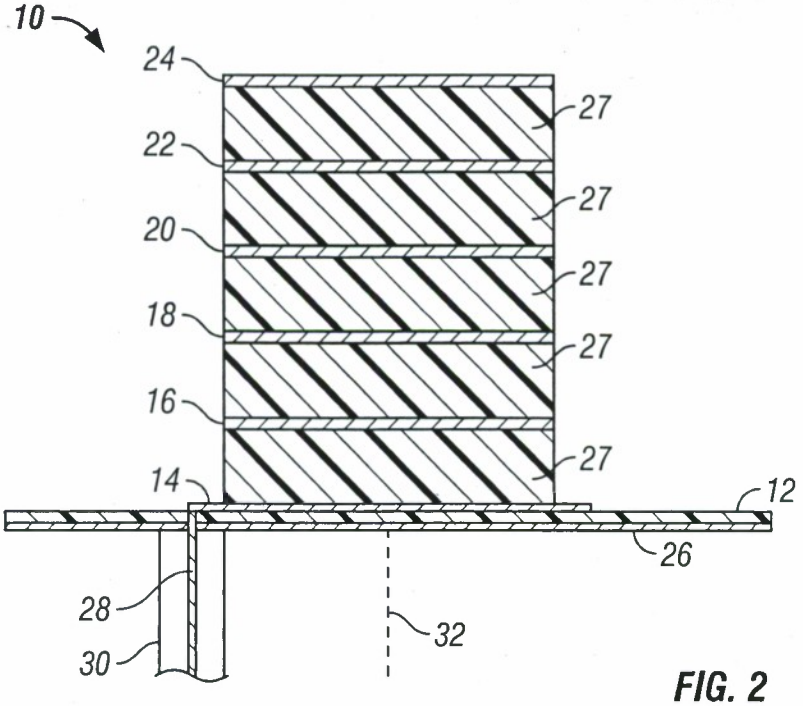


FIG. 2