NAVSEA
WARFARE CENTERS
NEWPORT

DEPARTMENT OF THE NAVY
NAVAL UNDERSEA WARFARE CENTER
DIVISION NEWPORT
OFFICE OF COUNSEL
PHONE: 401 832-3653
FAX: 401 832-4432
DSN: 432-3653

Attorney Docket No. 84704
Date: 19 March 2010

The below identified patent application is available for licensing. Requests for information should be addressed to:

TECHNOLOGY PARTNERSHIP ENTERPRISE OFFICE
NAVAL UNDERSEA WARFARE CENTER
1176 HOWELL ST.
CODE 07TP, BLDG. 990
NEWPORT, RI 02841

Serial Number 12/701,909

Filing Date 8 February 2010

Inventor Lynn T. Antonelli

Address any questions concerning this matter to the Office of Technology Transfer at (401) 832-1511.

20100322145

DISTRIBUTION STATEMENT
Approved for Public Release
Distribution is unlimited

Attorney Docket No. 84704

LASER-BASED METHOD FOR DOCKING AN UNMANNED UNDERWATER VEHICLE TO A SUBMARINE

STATEMENT OF GOVERNMENT INTEREST

[0001] The invention described herein may be manufactured and used by or for the Government of the United States of America for governmental purposes without the payment of any royalties thereon or therefore.

CROSS REFERENCE TO OTHER PATENT APPLICATIONS

[0002] None.

BACKGROUND OF THE INVENTION

Field of the Invention

[0003] The present invention relates generally to unmanned underwater vehicles (UUV) used with submarines and, more particularly, to a laser based system for autonomous docking of the UUV to a submarine.

Description of the Prior Art

[0004] Optical docking systems have been utilized on space vehicles, robot and machine guidance systems, and in various types of autonomous UUV docking situations.

[0005] However, docking to submarines involves relative motion of water currents which affects the motion of both the submarine and the UUV. This can result in a relative motion for which difficulties arise in either establishing or maintaining a visual lock between a docking station on the submarine and the UUV. For example, the UUV and/or the submarine may move to relative positions where the bulk of the submarine blocks the optical signals on the docking station of the submarine.

[0006] Acoustic methods for docking underwater vehicles have also been documented. The spatial accuracy of underwater acoustic docking systems, although useful for long-range docking procedures, may be severely limited for close range docking maneuvers with the submarine.

[0007] The following United States Patents describe various prior art systems that may be related to the above and/or other docking systems:

[0008] United States Patent No. 3,646,771 (issued March 7, 1972) to Greene, discloses an underwater communicating connection between a marine vessel, such as a submarine, and a stationary structure, such as a dock or underwater caisson or another marine vessel, for the passage of personnel, which is formed by juxtaposing the vessel and structure to isolate a water-containing space between watertight doors on the vessel and structure, removing water from the space, and admitting air at subaqueous pressure, whereby the vessel is forced against the

structure by hydrostatic pressure; the doors are then opened. A flexible sealing member outside of the connection on the vessel or structure may engage a sealing surface on the other for additional sealing. The dock may include a tower extending to the water surface. The vessel can be positioned by anchors resting on a platform or engaged to a frame fixed to the ground.

[0009] United States Patent No. 4,799,825 (issued January 24, 1989) to Meyerhoff et al, discloses a method for underwater fuel transfer of liquid fuels such as crude oil from an off-shore, stationary underwater mooring to a submerged submarine oil tanker. There is provided a berthing guidance and control system including permanently moored acoustic transponders interrogated by the tanker sonar equipment to provide input commands for azimuth control along the on-tack position in conjunction with speed controls. The system also includes an arrestor mooring apparatus for decelerating the tanker as the tanker approaches the underwater station. This underwater station has the dual function use of providing mooring for the tanker and also reception of the tanker oil transfer device.

[0010] United States Patent No. 5,748,102 (issued May 5, 1998) to Barron, discloses an apparatus for interconnecting an unmanned underwater vehicle and a free-fitting communications pod that includes a communications cable depending from the pod and extending to a buoy of less buoyancy than the pod, such that the cable carries communication signals between the pod and the buoy

and extends generally vertically in a column of water between the pod and the buoy, the buoy being in communication with a distal station. The apparatus further includes a mobile unmanned underwater vehicle having therein guidance means for directing the vehicle to the cable, the vehicle being in communication with a control vessel, connector means mounted in a nose portion of the vehicle and adapted to intercept the cable, the connector means being further adapted to permit the cable to slide therethrough as the vehicle continues movement after the intercept of the cable, and complementary alignment means on the vehicle and the pod adapted to cause the vehicle to engage the pod in a preselected orientation and azimuth, with the communication components of the UUV and pod in alignment, whereby to place the control vessel in communication with the distal station.

[0011] United States Patent No. 6,502,527 (issued January 7, 2003) to Danielson, discloses a system for recovering submerged devices that uses two recovery tubes of an underwater recovery vehicle. A recovery member is disposed within a first recovery tube. A second recovery tube receives the submerged device. To recover the submerged device, the recovery member is extended from the first recovery tube. A capture arm, which is pivotally attached to the end of the recovery member, is extended. The extended capture arm is engaged with the submerged device. The capture arm is adjusted to align the submerged device with the

second recovery tube. The recovery member is retracted to recover the submerged device into the second recovery tube. Because the recovery member is not disposed within the same recovery tube that is used to house the retrieved submerged device, the submerged device may have an outer diameter approximately equal to the inner diameter of the recovery tube.

[0012] United States Patent No. 6,677,889 (issued January 13, 2004) to Van Rees et al, discloses an auto-docking system that can automatically dock a surface ship. The auto-docking system provides a close in radar system and a secondary propulsion system that is under control of a docking processor.

[0013] United States Patent No. 7,025,014 (issued April 11, 2006) to Forgach et al, discloses one or more docking cages releasably attached to a tow line extending from the stern of a retrieval surface ship, that emit optical tracking beacon beams picked up by sensors in unmanned underwater sea craft vehicles being approached, for steered propulsion thereof into rammed hook attachment to the cages. A sea craft vehicle thereby releasably attached to a cage, is towed onboard the retrieval ship by storage reel-in of the tow line, which is then disconnected from the cage and the retrieved vehicle for subsequent use in retrieval of other unmanned sea craft vehicles.

[0014] United States Patent No. 7,505,366 (issued March 17, 2009) to Blackmon et al, discloses a linear mechanism for optical-to-acoustic energy conversion for optoacoustic

communication from an in-air platform to an undersea vehicle. Signals used in underwater acoustic telemetry applications are capable of being generated through the linear optoacoustic regime conversion process. A number of issues concerning linear optoacoustic communication is addressed that lead to a formulation of a linear regime optoacoustic communication scheme. The use of oblique laser bean incidence at an air-water interface to obtain considerable in-air range from the laser source to the vehicle is also addressed. The effect of oblique incidence on in-water range is addressed as well. Optimum and sub-optimum linear optoacoustic sound-generation techniques for selecting the optical wavelength and signal frequency for optimizing in-water range are identified. Optoacoustic techniques employing M-ary frequency shift keying and multifrequency shift keying are compared with communication parameters such as bandwidth, data rate, range coverage and number of lasers employed.

[0015] United States Patent Publication No. 2006/0083111 (published April 20, 2006) to Grasso, discloses a method for detecting, tracking and locating submarines that utilizes pulsed coherent radiation from a laser that is projected down through a water column, with particles in the water producing speckle from backscatter of the random particle distribution, with correlation of two closely time-spaced particle-based speckle patterns providing an intensity measurement indicative of the presence of a submarine. Subsurface submarine movement provides a subsurface

wake which causes movement of particles such that two closely-spaced "snapshots" of the returns from particles in the same water column can detect particle movement due to the wake. The magnitude of the speckle pattern change indicates particle movement. In one embodiment, the return signals are imaged onto an intensified CCD or APA array that capture two successive laser pulses through the utilization of dual pixel registered cameras. Note that in the subject system, phase information is converted to measurable intensity information relating to particle motion.

[0016] United States Patent Publication No. 2008/0289558 (published November 27, 2008) to Montgomery, discloses a profile scanner for locating a target zone on a profile of a vessel comprising an emitter adapted to progressively or instantaneously radiate towards the vessel; a receiver providing a signal indicative of radiation incident thereon; a controller or processor including stored instructions, for energizing the emitter and receiving the signal, and adapted to determine the vertical location of the target zone relative to scanner. All laser beams propagate in-air and are meant to assist surface vessels to dock to a stationary mooring on a pier to accommodate the tidal sea variation.

[0017] United States Patent Publication No. 2008/0302292 (published December 11, 2008) to Ruggaber, discloses a method and apparatus for optical and autonomous docking of an underwater vehicle into a torpedo tube of a submarine. The apparatus has a

moveable tube provided with an insertion/extraction device at one of its ends. The device is in the form of a tube or of a ring in a retracted state and in the form of a funnel in an extended state.

[0018] The above-cited prior art does not adequately disclose an optical docking system which is suitable for long range and short range docking of UUVs with a submarine. Consequently, those skilled in the art will appreciate the present invention that addresses the above and other problems.

SUMMARY OF THE INVENTION

[0019] It is therefore a general purpose and primary object of the present invention to provide an improved system and method of use for docking a UUV to a submarine.

[0020] It is a further object of the present invention to provide guidance and signaling between a submarine and an UUV utilizing light beams.

[0021] In order to attain the objects described, the present invention provides various methods for docking a UUV to a submarine. In one embodiment, the method comprises rotating a first light beam, which is positioned on the submarine and detecting the first light beam at the UUV, whereupon the UUV heads towards the submarine utilizing the first light beam for guidance.

[0022] Other steps comprise detecting light which is reflected from the UUV back toward the submarine. After detecting the reflected light at the submarine (which indicates the UUV is approaching the submarine) then the method may comprise changing rotation speed of the light beam from the submarine in order to move the first light beam. This movement guides the light-following UUV towards a docking station on the submarine.

[0023] In one embodiment, the method further comprises turning off the first light beam and then utilizing a second light beam positioned in a cylinder in the submarine. The second light beam is capable of guiding the UUV into the cylinder.

[0024] In another embodiment, the method further comprises utilizing UUV light beams to guide the UUV to a docking station positioned on a hull of the submarine such as by detecting the reflected light from the UUV light beams - which reflect from the docking station.

[0025] The method further comprises turning on a UUV light beam to signal the submarine to turn off the first light beam. The method comprises utilizing a blue-green light beam and filtering signals from a photodetector to reduce light noise - due to sunlight. Other steps comprise utilizing a quadrant photodetector to guide the UUV toward the submarine.

[0026] The present invention also provides a system for docking a UUV to a docking station on a submarine. The system comprises one or more elements such as a first submarine light

transmitter positioned on the submarine, which is operable to produce a first light beam. A light detector may be utilized on the UUV for detecting the first light beam and for guiding the UUV towards the submarine after detecting the first light beam.

[0027] A light detector on the submarine may be utilized which is operable for detecting light reflecting from the UUV. After receiving the light reflecting from the UUV, the first light transmitter may rotate for guiding the light-seeking UUV toward the docking station.

[0028] The docking station comprises a cylinder in the submarine. A second submarine light transmitter is positioned in or proximate to the cylinder whereby the light detector on the UUV is operable for utilizing the second light beam to guide the UUV into the cylinder.

[0029] In another embodiment, the UUV further comprises a plurality of docking light transmitters and a plurality of docking light detectors. The system further comprises a UUV light beam positioned on a forward portion of the UUV, which provides a signal to the submarine to turn off the first light beam.

[0030] Other elements comprise reflective material on a forward portion of the UUV which reflects light around the UUV light detector back to the submarine light detector and in one embodiment, the submarine light transmitter is operable to produce a blue-green light beam. The UUV light detector may

further comprise a quadrant photodetector, which is sensitive to the blue-green light beam.

BRIEF DESCRIPTION OF THE DRAWINGS

[0031] A more complete understanding of the invention and many of the attendant advantages thereto will be readily appreciated as the same becomes better understood by reference to the following detailed description when considered in conjunction with the accompanying drawings, wherein like reference numerals refer to like parts and wherein:

[0032] **FIG. 1** depicts an optical beacon utilized to initiate a docking sequence in accordance with one embodiment of the present invention;

[0033] **FIG. 2** depicts a quadrant photodetector adapted for underwater use with surrounding retroreflective material in accordance with one embodiment of the present invention;

[0034] **FIG. 3** depicts a UUV with light transmitters in accordance with one embodiment of the present invention;

[0035] **FIG. 4** depicts a UUV being led from a distance to a closer distance with the submarine in accordance with one embodiment of the present invention; and

[0036] **FIG. 5** depicts a close range docking operation between a UUV and a submarine in accordance with the present invention.

DETAILED DESCRIPTION OF THE INVENTION

[0037] Referring now to the drawings and, more specifically, to **FIG. 1**, there is shown a docking system **10** in the initial stages of a docking operation between a submarine **12** and an unmanned underwater vehicles (UUV) **14** in accordance with one embodiment of the present invention.

[0038] The submarine **12** has a light transmitter **20** positioned so that the transmitter produces a light beam **18**, which is recognized by the UUV **14** to start the docking process. The UUV **14** may utilize photodetectors, such as a specially modified quadrant photodetector **16** (shown in **FIG. 2**) to detect the light beam **18**.

[0039] Prior to docking, it is desirable to calibrate the photodetectors of the UUV **14** to filter extraneous light noise - such as sunlight. This filtering is especially useful for shallow water docking operations.

[0040] In one embodiment, the quadrant photodetector **16** is modified so that optical beams in the blue-green wavelength are utilized because this wavelength experiences the least underwater energy attenuation in water; thereby, allowing for longer laser-light propagation distances and longer initial docking ranges. An optical filter may be utilized to filter out extraneous light. Other features of the photodetector **16** are discussed hereinafter.

[0041] To initiate the laser-based docking routine, the submarine **12** transmits the conical blue-green wavelength light beam **18**. In one embodiment, the laser or light transmitter **20** may be located on a submarine mast **22** in order to allow full rotation scanning of the submarine **12**. Other known means for rotating, scanning, pulsing, and the like may be utilized to produce a light beam that is detectable by the UUV **14**.

[0042] In one embodiment, the light beam **18** is rotated as indicated by arrow **21** to scan the light beam in a plane with respect to the submarine **22**. The rotation of the light beam **18** allows the UUV **14** to detect the light beam in various orientations between the submarine **12** and the UUV. One of the orientations is depicted in **FIG. 1**.

[0043] The detection range is primarily determined by the optical attenuation in the water, the photodetector sensitivity for one-way optical transmission, and the brightness of the light beam **18**. In most instances, the light transmitter **20** transmits the light beam **18** brightly enough to be detected by the UUV **14** at a significant distance in relatively clear ocean water. The cone angle of the light beam **18** is also a factor in the distance that the light beam can be detected by the UUV **14**. The cone angle of the light beam **18** may be selected based on additional factors besides the distance of detection such as the type of docking to

the submarine **12** and the depths of operation of the submarine and the UUV **14**.

[0044] Referring to **FIG. 3**, in one embodiment, the UUV **14** may have six or seven quadrant photodetectors, such as photodetectors **16A**, **16B**, **16C**, **16D**, **16E**, **16F**, and **16G** on the outer hull of the UUV. While prior art quadrant photodetectors respond to infrared wavelengths, the quadrant photodetectors used to detect the light beam **18** will preferably operate in the 400 to 550 nm wavelength range in order to be useful for blue-green light detection.

[0045] The positions of the photodetectors on the port and starboard sides, as well as the aft and top surfaces of the UUV **14** are provided for detecting the light beam **18** at any orientation between the submarine **12** and the UUV. However, the number of photodetectors and the positioning of the photodetectors also depends on the type of docking with the submarine **12**. For example, the UUV **14** may be designed to dock onto the hull of the submarine or into a conical tube, whereupon photodetectors may be provided on the UUV and/or the submarine **12** for final docking phase guidance.

[0046] Referring now to **FIG. 2**, the quadrant photodetector **16** comprises four photodetectors **24**, **26**, **28** and **30**, each of which can detect the amplitude or energy of the light for the desired light frequency range. The quadrant design allows for determining the direction from which the light beam **18** originates. In other words, the electronics compare the

amplitude or strength of the light beam signal at each of the photodetectors **24, 26, 28** and **30**, in order to determine the direction from which the light beam **18** originates. The steering of the UUV **14** can then direct the front of the UUV toward the light transmitter **20**.

[0047] Once the UUV **14** has established an optical lock on the front quadrant photodetector **16D**, the UUV may proceed to the guideline tracking phase of the docking procedure wherein the UUV is guided toward the light transmitter **20** of the submarine **12**.

[0048] The quadrant photodetector **16D**, which is located in the front of the UUV **14**, is used to acquire the light beam **18** and to lock onto the light beam in order to steer the UUV toward the submarine **12**. The quadrant photodetector **16** is preferably surrounded by a ring **32** of retro-reflective material as shown in **FIG. 2**. The retro-reflective material of the ring **32** reflects the light beam **18** back toward the submarine **12**.

[0049] In one embodiment, the submarine **12** utilizes a photodetector **34**, which is positioned near the light transmitter **20**, to capture reflected light from the retro-reflective material of the ring **32** on the UUV **14**. In this way, the submarine **12** can detect that the UUV **14** has acquired the light beam **18** and is heading towards the light transmitter **20**. The submarine **12** will be able to detect the reflected light from the light beam **18** if attenuation for two-way optical transmission is above the

threshold detection level for the photodetector **34**. Thus, the UUV **14** may be at a farther distance from the submarine **12** than when the UUV initially detects the light beam **18**. As the UUV **14** steers towards the submarine **12**, eventually the submarine will be able to detect the light beam reflections from the UUV.

[0050] Once the submarine **12** has detected the reflection of the light beam **18** off the UUV **14**, then the submarine ceases rotating the light transmitter **20** and locks the light beam in the direction of the reflection - which should coincide with the direction to the UUV. In one embodiment, the light transmitter **20** is operable to gradually narrow the cone of the light beam **18** to add precision to the guidance information of the front quadrant photodetector **16D**, which is utilized to maintain a heading towards the light transmitter.

[0051] In one embodiment, the submarine **12** detects the UUV **14** and then rotates the light beam **18** around the mast **22** - as indicated by the arrow **21**. However, the light beam **18** may be rotationally adjusted such that the UUV **14** is steered on a vector path leading the UUV toward a submarine docking area - one embodiment of which is indicated by docking elements **36** in **FIG. 4**. The speed of the UUV **14** and the rotational adjustment of light beam **18** are selected to be slow enough to minimize the chance that the UUV will lose a lock on the light beam. While **FIG. 4** depicts the docking area to be on the upper bow surface of

the hull of the submarine **12**, it would be recognizable to one skilled in the art that the docking area may be aft or otherwise located.

[0052] If the UUV **14** is to dock in a tube station on the submarine **12**, then the light beam **18** would initially acquire the UUV - as discussed previously. However, once the photodetector **34** on the submarine **12** detects the reflected light from the UUV **14**, a second submarine light beam **38**, emanating from the docking tube will be directed along the vector projection of the light beam **18** to acquire the UUV. This operation may occur after the light beam **18** has been rotated to orient the UUV **14** to acquire the second submarine light beam **38**.

[0053] The light beam **18** can then be extinguished and re-locked with the UUV **14**. The second light beam **38** can also be pulsed such that the time-gating on the reflection from the UUV **14** can be used by the submarine **12** to check the docking range during approach. Thus, the docking station may also be fitted with a photodetector to detect optical reflections from the UUV **14**.

[0054] If the UUV **14** is to dock onto the hull of the submarine **12**, as indicated in **FIG. 4** and **FIG. 5**; then once the UUV detects the light beam **18**, two bottom-mounted pulsed light sources **40** are activated. These light sources are used to detect the docking structure. The docking structure may comprise the docking elements **36**, which may comprise pylons or the like on the hull of

the submarine **12**, or docking into a tube. The pulsing of light sources **40** (which may comprise LEDs) allows the UUV **14** to determine the range to the docking station of the submarine **12**, and may also be utilized for collision avoidance.

[0055] Alternatively, the docking elements **36** on the hull of the submarine **12** may each comprise a ring or a region of retro-reflective material. The light sources **40** may be pulsed light beams in which the action of pulsing could be utilized to calibrate the approach onto the docking elements **36** and to acquire range information solely by means of optical and/or a complimentary high frequency acoustic pulse time delay.

[0056] Once reflections from the light sources **40** onto the retro-reflective material of the docking elements **36** are detected by the UUV **14**, the UUV reduces forward thrust in order to position onto the docking elements. The docking elements **36** are then clamp the UUV **14** to the docking station. The optical reflections from the retro-reflective material surrounding or on the docking elements **36** are detectable by the bottom-mounted quadrant photodetectors **16E** and **16F** on the UUV **14**.

[0057] Additionally and apart from the docking elements **36**, the hull of the submarine **12** should have a low optical reflection. This low optical reflection reduces noise on the photodetectors of the UUV during the terminal docking phase.

[0058] The reflections, detected by the position-sensitive quadrant photodetectors **16E** and **16F**, are used to guide the UUV **14** onto the docking elements **36**. If the submarine **12** loses a lock on the reflection from the UUV **14**, then rotation of the light transmitter **20** is resumed until re-lock is achieved.

[0059] As the UUV **14** descends toward the hull of the submarine **12** - as indicated in **FIG. 5**, the photodetector **34** will lose the lock on the reflection from the light beam **18**. This loss of the lock could start the light transmitter **20** to rotate again. To advert this issue, the UUV **14** may also be fitted with a front light beam **42** in order to communicate that the UUV has entered the terminal docking phase.

[0060] Alternatively, light from the light transmitter **20** may be re-directed toward the center point between the docking members **36** to act as a tertiary docking guide. The UUV **14** could then acquire the beam from the re-directed light from the light transmitter **20** on the upper quadrant photodetectors **16A** and **16B**.

[0061] The docking is concluded when the UUV **14** has been secured to the docking station.

[0062] In summary, the method of operation has four stages: photodetector calibration/filtering to prevent sunlight or other stray light from affecting the docking operation; initiating the docking procedure by rotating the light beam for detection by the UUV and initial guidance; confirmation of detection of the UUV

and guidance of the UUV toward the docking station; and terminal docking maneuvers of the UUV to the submarine.

[0063] It will be understood that the invention will incorporate computers and electronics for controlling light transmission and analyzing the photodetector outputs in order to provide feedback to the submarine and the UUV for docking control and UUV maneuver controls.

[0064] While the present invention may best utilize blue-green wavelengths for improved range capabilities, the invention is not limited to the blue-green radiation.

[0065] Many additional changes in the details, components, steps, and organization of the system, herein described and illustrated to explain the nature of the invention, may be made by those skilled in the art within the principle and scope of the invention. It is therefore understood that within the scope of the appended claims, the invention may be practiced otherwise than as specifically described.

Attorney Docket No. 84704

LASER-BASED METHOD FOR DOCKING AN UNMANNED UNDERWATER VEHICLE TO A SUBMARINE

ABSTRACT OF THE DISCLOSURE

An Unmanned Undersea Vehicle (UUV) docking system is provided in which the UUV is responsive to a first rotating light beam (which emits from a submarine) to begin a docking procedure. The UUV utilizes a photodetector to detect the first light beam and to guide the UUV toward the submarine by utilizing the first light beam. In one embodiment, the UUV reflects light from the first light beam back to the submarine. A photodetector on the submarine detects the reflected light to ascertain that the UUV is locked onto the first light beam. The submarine then stops rotating the light beam so that a trajectory of the UUV heads in the direction of a docking station which is positioned on the submarine.

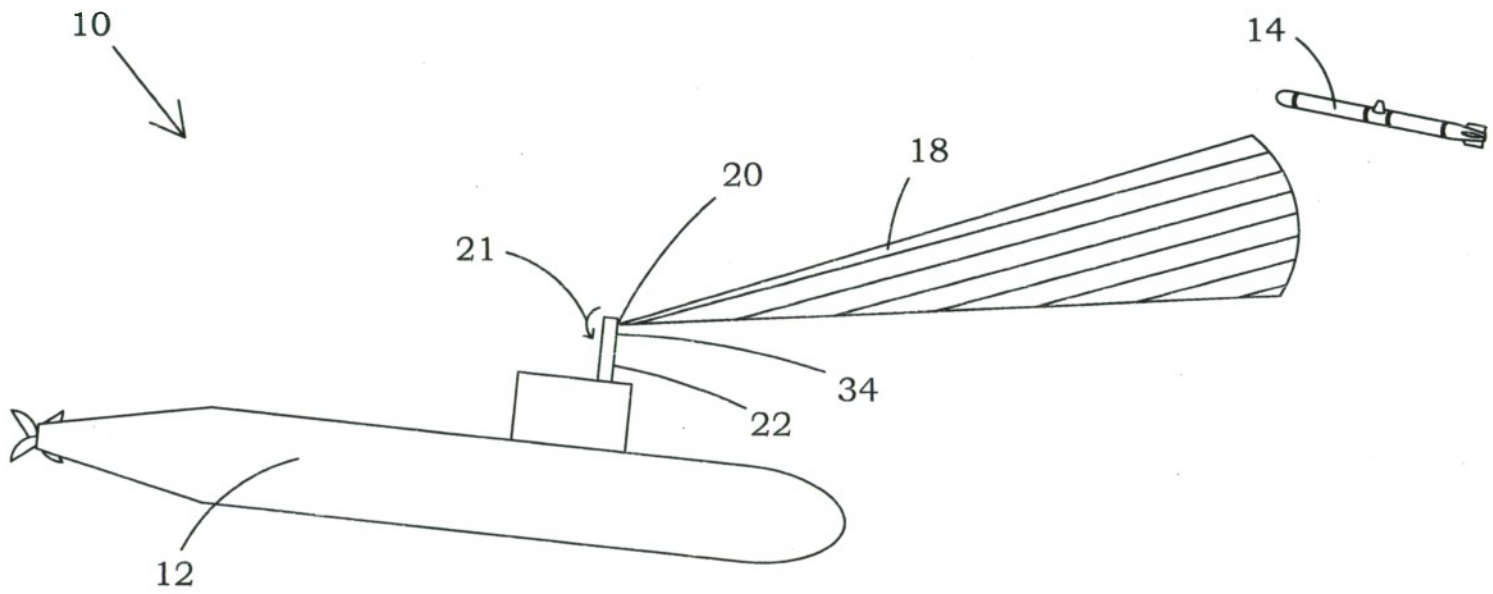

FIG. 1

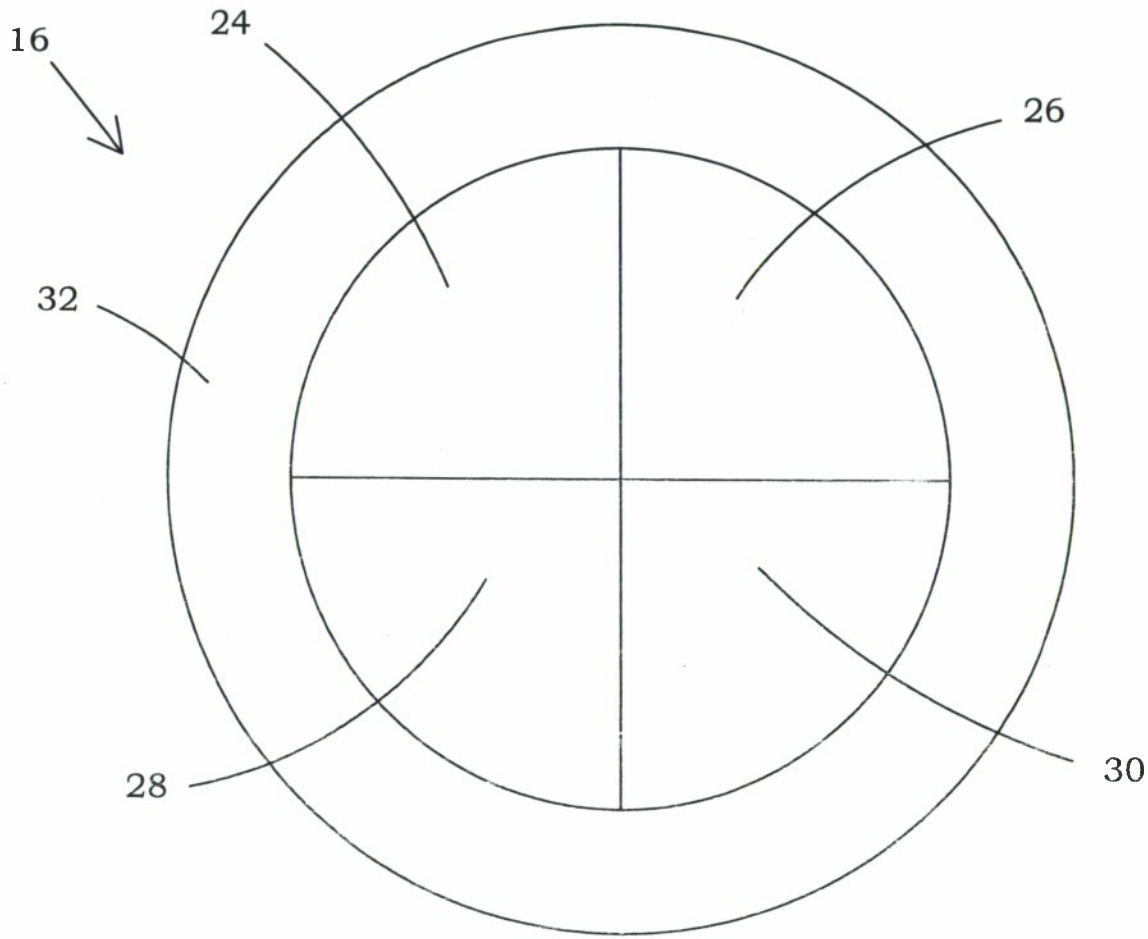

FIG. 2

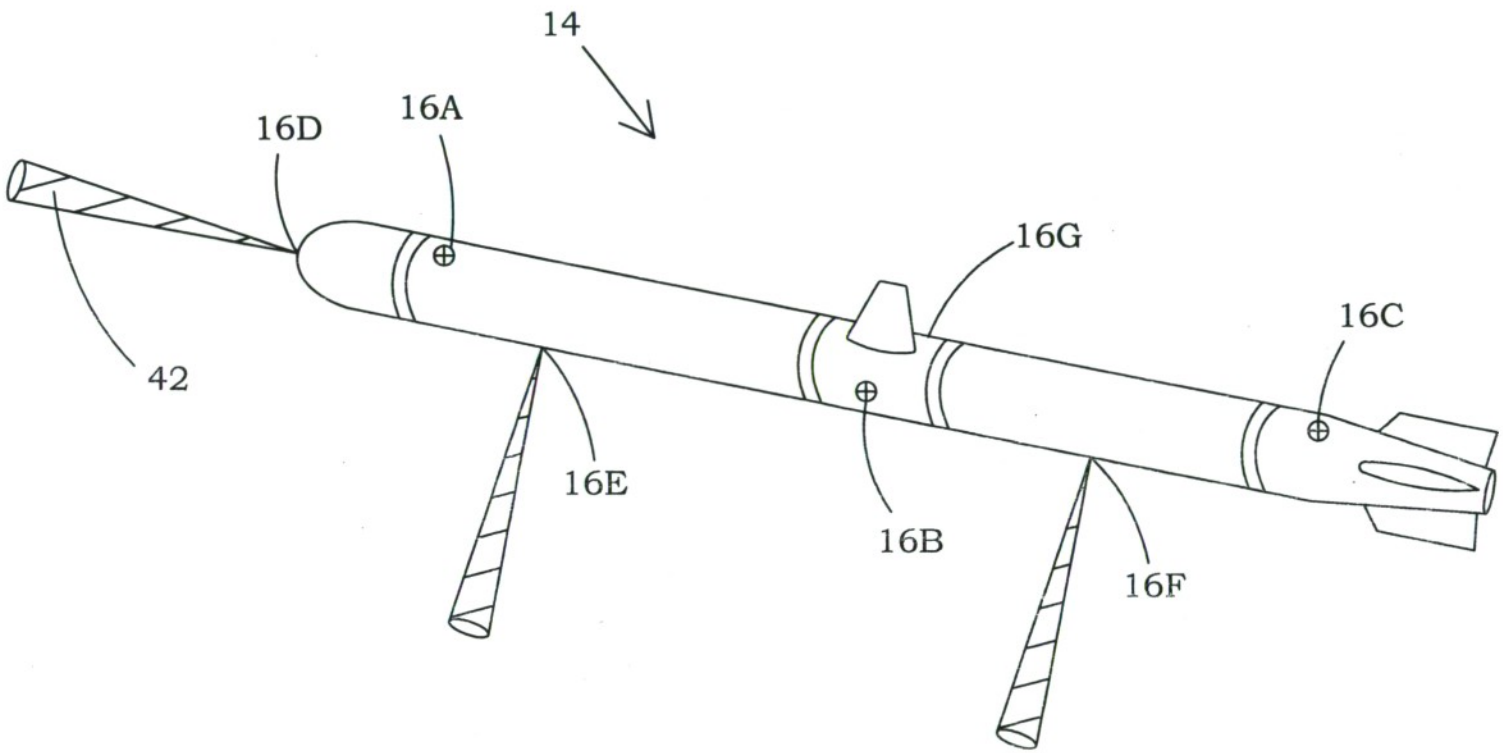

FIG. 3

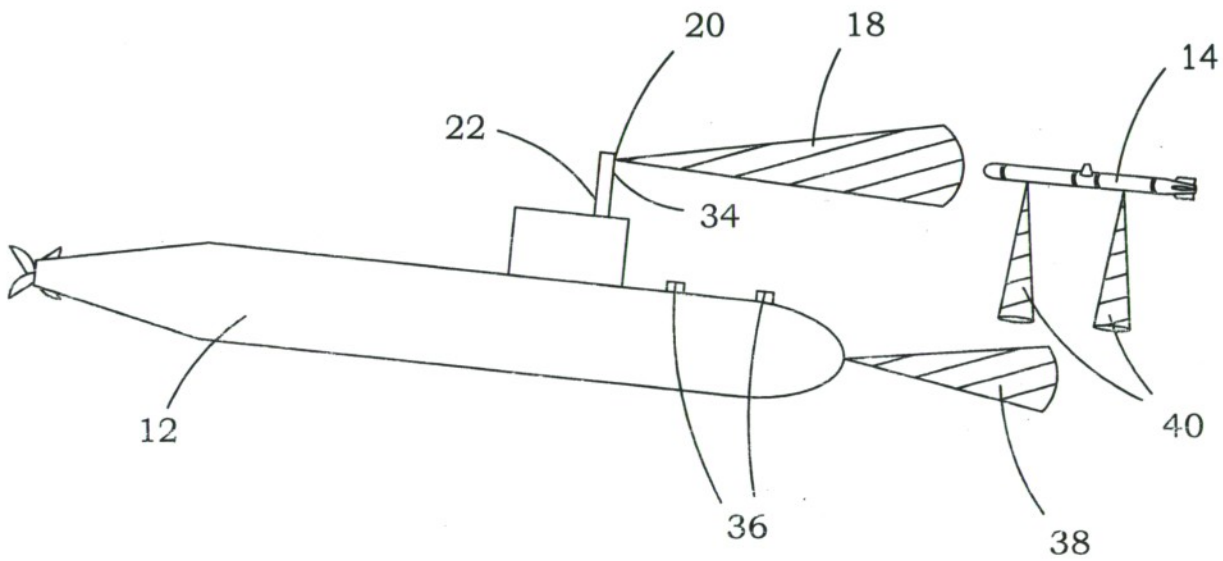

FIG. 4

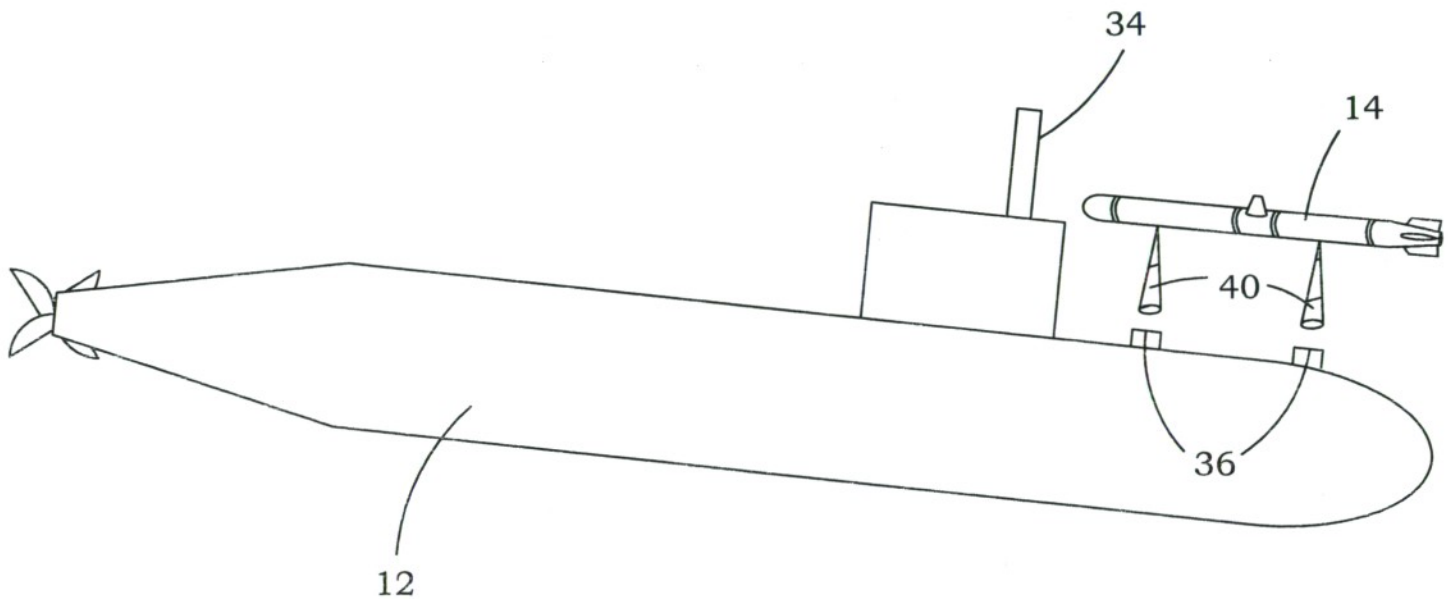

FIG. 5