NAVSEA
WARFARE CENTERS
NEWPORT

DEPARTMENT OF THE NAVY
NAVAL UNDERSEA WARFARE CENTER
DIVISION NEWPORT
OFFICE OF COUNSEL
PHONE: 401 832-3653
FAX: 401 832-4432
DSN: 432-3653

Attorney Docket No. 99605
Date: 24 November 2009

The below identified patent application is available for licensing. Requests for information should be addressed to:

TECHNOLOGY PARTNERSHIP ENTERPRISE OFFICE
NAVAL UNDERSEA WARFARE CENTER
1176 HOWELL ST.
CODE 07TP, BLDG. 990
NEWPORT, RI 02841

Serial Number 12/587,329

Filing Date 25 September 2009

Inventor Paul V. Cavallaro

Address any questions concerning this matter to the Office of Technology Transfer at (401) 832-1511.

DISTRIBUTION STATEMENT
Approved for Public Release
Distribution is unlimited

20091208517

Attorney Docket No. 99605

COMPACT AND STAND-ALONE COMBINED MULTI-AXIAL AND SHEAR TEST APPARATUS

[0001] This application claims the benefit of United States Provisional Patent Application Serial No. 61/215,967 filed on April 28, 2009 and entitled "Compact and Stand-Alone Combined Multi-Axial and Shear Test Apparatus" by the inventors, Paul V. Cavallaro, Ali Sadegh and Claudia Quigley.

STATEMENT OF GOVERNMENT INTEREST

[0002] The invention described herein may be manufactured and used by or for the Government of the United States of America for governmental purposes without the payment of any royalties thereon or therefor.

CROSS REFERENCE TO OTHER PATENT APPLICATIONS

[0003] None.

BACKGROUND OF THE INVENTION

(1) Field of the Invention

[0004] The present invention relates generally to a compact, stand-alone in-plane shear loading and biaxial tension or compression testing apparatus employable for studies of the mechanical properties of materials such as metals, plastics and composites.

(2) Description of the Prior Art

[0005] Fabrics typically used in air-inflated structures (air beams, temporary shelters, tents, temporary bridges, and space structures) are often manufactured in woven or braided forms. These structures rely on inflation pressure to pre-tension the fabric (or membrane) so that the necessary planar stiffness can be developed to achieve rigidity and resistance to in-plane and lateral loads.

[0006] Unlike metallic structures, air-inflated structures are designed to be lightweight; to have deployed-to-stowed volume ratios that can be in the range of 1000-to-1; and possibly be self-erecting. Although these technologies have been known in the art for many years, the technologies have not been refined to a level that reliable structures can be designed by structural analysis.

[0007] The advent of fiber-based structural material and weaving/braiding technologies has improved the load carrying capacity of pressurized structures. Accordingly, there has been increasing interest in modeling the mechanical behavior of woven fabrics. However, this class of composite material has complex microstructures that can produce complex mechanical responses. In particular, the mechanical characteristics of plain-woven fabrics used in inflated structures (unlike traditional composite materials) exhibit high non-linearity with a dependence on the internal pressure and contact interactions within the woven fabric.

[0008] Therefore, there is a need for a testing apparatus which allows the measurement of the elastic and shear moduli for air beams. Specifically, the need is for a compact and independent testing apparatus that is capable of applying a combined in-plane shear load and biaxial load. This need includes the capability of loading non-orthogonal composite or fabric materials with equi biaxial or non-equi biaxial loading.

[0009] While biaxial testing apparatuses with compression and tension loading or in-plane shear testing apparatuses exist in the prior art, only those disclosed in United States Patents Nos. 6,860,156, 7,051,600 and 7,204,160 to Cavallaro et. al have a combined feature of in-plane shear and compression/tension testing capabilities and the capability to apply a non-orthogonal biaxial loading.

[0010] Cavallaro et al., (United States Patent No. 6,860,156), describes a multi-axial tension or compression and an in-plane shear loading testing apparatus in which the apparatus is capable of determining the mechanical properties of metal, plastic, woods, fabrics, elastomers and other materials. The testing apparatus uses a mechanical testing machine for applying the tension, compression and rotation loading on the apparatus. The loading is applied to the test specimen in a displacement-controlled mode by which an equal biaxial extension (or contraction) results.

[0011] Sadegh et al, (United States Patent No. 7,204,160), describes a combined multi-axial tension or compression and in-plane shear loading apparatus with a choice of displacement-controlled or force-controlled modes of loading. This apparatus

improves upon the apparatus of (United States Patent No. 6,860,156) and can be used to subject a test specimen to proportionately controlled loads among the axial directions. The force control feature is crucial in creep testing of composite, anisotropic and fabric materials, wherein constant tension or compression forces on the test specimen is desired.

[0012] Cavallaro et al. (United States Patent No. 7,051,600) describes a testing apparatus capable of simultaneously applying a three-dimensional tension or compression state of stress combined with in-plane shear loading in a displacement-controlled mode. This apparatus improves over the previous apparatus in which of United States Patent No. 6,860,156 in which the compression and tension was in only in two dimensions (planar). That is, the test specimen could be subjected to tension, compression, independently or simultaneously, in the three orthogonal directions, X, Y and Z, with the specimen optionally subjected to a shear load in one plane. A restriction of the apparatus is the required use of a mechanical testing machine for applying the tension, compression and rotation loading to the apparatus.

[0013] Instead prior art methods have employed two or more separate actuators in complex test fixtures and/or pressurization techniques for applying a biaxial load to a test specimen. A disadvantage of these methods is the need for two or more loading devices and the relatively high cost of the equipment.

[0014] United States Patent No. 5,905,205 describes an in-plane biaxial test apparatus comprising a rhombus and linkages to transfer the load to the orthogonal direction of the loading. The

disadvantage of this apparatus is that the apparatus is not capable of applying in-plane shear to the test specimen. Another disadvantage of this apparatus is that the biaxial loading is limited to an orthogonal configuration.

[0015] Lynch et al. (United States Patent No. 3,776,028) describes an apparatus requiring three independent loading mechanisms. The test fixture of Lynch is a load point application device that is used to position the application of a single point force acting normal to a flat rectangular panel (specimen) such as those found in aircraft structures. The device does not enable the application of multi-axial tension/compression forces in optional combination with in-plane shear forces.

[0016] United States Patent No. 4,192,194, describes an apparatus for bi-axially loading a specimen through pressurizing the inside surface of a cylinder. The disadvantage of this apparatus includes the requirement of cylindrical shape of the specimen and the high cost and added equipment of pressurization.

[0017] Simonelli et al (United States Patent No. 5,913,246) does not enable multi-axial loads (tension-tension, tension-compression, compression-compression) applied simultaneously along orthogonal or oblique orientations with or without in-plane shear regardless of the shape of the test specimen.

[0018] Other prior art reference include United States Patent No. 5,448,918 which describes an apparatus with X-shape that is only used for compression load and United States Patent No. 5,279,166 which describes an apparatus for self-alignment of a biaxial loading device. United States Patent No. 5,144,844

describes a cruciform planar specimen for biaxial material testing.

[0019] Although the advantages over the prior art by the cited Cavallaro and Sadegh references are numerous, a significant disadvantage is that the apparatuses of the cited references require a mechanical testing machine with the capabilities of applying tension, compression and rotation loading. That is, to use any apparatus of the cited patent references, one needs to acquire the mechanical testing machine. The machine can be costly and requires a large space for operation.

[0020] Thus, there is a need for a compact, comparatively low cost and stand-alone material testing apparatus that is capable of applying combined multi-axial tension/compression and in-plane shear loads to a specimen in displacement-controlled or force-controlled modes without requiring a materials testing machine for the operation of the apparatus.

SUMMARY OF THE INVENTION

[0021] It is therefore a general purpose and primary object of the present invention to provide a compact, low cost and stand-alone material testing apparatus that is capable of applying combined multi-axial tension/compression and in-plane shear loads to a test specimen in optional displacement-controlled or force-controlled modes <u>without</u> requiring a materials testing machine for operation of the apparatus.

[0022] It is a further object of the present invention to provide, independently and without the need for a testing machine,

the ability to test a specimen by subjecting the specimen to a combined in-plane, compression or tension as well as in-plane shear.

[0023] In order to attain the objects described, the present invention relates generally to a combined (simultaneously or independently) in-plane shear and compression or tension loading of a test specimen such as but not limited to metals, plastics, composites, woods, fabrics or anisotropic materials. The apparatus is self-contained to operate independent of an external testing device. The apparatus can apply unequal, orthogonal or oblique stress states on a specimen by the use of load transfer systems comprising two rhombus-shaped scissor jack assemblies and a turntable.

[0024] The apparatus provides flexibility in applying an unequal biaxial load to the specimen by applying different torque to each scissor jack assembly. In addition, the apparatus provides further flexibility in applying an orthogonal biaxial loading by choosing a different angle, other than orthogonal between the scissor jack assemblies. The in-plane shear load can be applied either simultaneously or independently of the biaxial tension/compression load.

[0025] The apparatus comprises a lower scissor jack assembly, an upper scissor jack assembly, at least four loading plates, stepper electric motors and controls, a turntable and a fixed support base. Each scissor jack assembly includes a rhombus-shape linkage system, at least one power screw-gear, loading plate assemblies and loading supports.

[0026] The upper scissor jack assembly is supported above the fixed base and the lower scissor jack assembly is positioned on the turntable. The turntable engages with a stepper motor to rotate in alternating directions with respect to the base. By rotating the turntable, the lower scissor jack assembly rotates relative to the upper scissor jack assembly. The angle of rotation of the lower scissor jack assembly can be measured directly.

[0027] The linkage system of the upper scissor jack assembly has four hinges, two hinges at either side of the screw-gear and the other two hinges that are connected to two linkages of the upper scissor jack assembly. One of the stepper motors is axially connected to the power screw-gear. Two hinges at either side of the screw-gear are restrained to move in an expansion and/or a contraction mode in collinear slots located on the support brackets. The other two hinges are restrained by co-linear sliding shafts that are supported by fixed brackets. The co-linear slots (for the screw-gear hinges) are perpendicular to the axis of the co-linear sliding shafts. Upon energizing the stepper motor, the screw-gear hinges along the screw-gears move within the slots, and the adjacent loading hinges move perpendicularly along the sliding shaft while the center of the upper scissor jack assembly remains fixed.

[0028] Likewise, the linkage system of the lower scissor jack assembly has four hinges, two at either side of the screw-gear and the other two hinges connecting the two linkages. The second stepper motor is axially connected to the power screw-gear of the

lower scissor jack assembly. All hinges of the lower scissor jack assembly are restrained to move in four slots (two co-linear pairs) on the turntable. The co-linear slots are perpendicular allowing the adjacent hinges, screw-gear hinges and loading hinges, to move in perpendicular directions in an expansion and/or contraction mode. Upon energizing the stepper motor of the lower scissor jack assembly, all hinges move along their corresponding slots in a perpendicular manner while the center of the lower scissor jack assembly remains fixed at a center point that is vertically below the center point of the upper scissor jack assembly.

[0029] Each of the loading plates comprises a L-shaped bracket and a gripping/clamping means that is attached to the distal end of the bracket. The loading plates are attached to the two loading hinges of the upper scissor jack assembly and extend below the plane of the upper scissor jack assembly. Likewise, another set of loading plates are connected to the loading hinges of the lower scissor jack assembly and extend above the plane of the lower scissor jack assembly.

[0030] The plane of the clamp mechanism of the sets of the loading plates is co-planar. That is, when the four sides of the test specimen are clamped by the loading plates; the test specimen remains horizontal. Because the center point of the two scissor jacks are fixed in space and are located parallel to each other; the center point of the specimen remains fixed while the specimen is subjected to tension or compression.

[0031] The output shaft of a third stepper motor is connected to a gear that engages with a larger gear with the axle of the larger gear connected to the turntable. Upon energizing the stepper motor, the turntable rotates with respect to the base. The stepper motors are electrically connected to corresponding motor drivers. Each driver is electrically connected to a data acquisition device which is connected to a computer. Through simple programming, one can control the use of the stepper motors; thereby, applying a tension, compression and rotation to the specimen at varying testing levels.

BRIEF DESCRIPTION OF THE DRAWINGS

[0032] A more complete understanding of the invention and many of the attendant advantages thereto will be readily appreciated as the same becomes better understood by reference to the following detailed description when considered in conjunction with the accompanying drawings wherein like reference numerals and symbols designate identical or corresponding parts throughout the several views and wherein:

[0033] **FIG. 1** depicts a perspective view of one embodiment of the testing apparatus of the present invention with a test specimen positioned within the apparatus;

[0034] **FIG. 2** depicts a top view of the testing apparatus of **FIG.1**;

[0035] **FIG. 3** depicts a side view of the testing apparatus of **FIG. 1**;

[0036] **FIG. 4** depicts a perspective view of the upper scissor jack assembly and loading plates of the testing apparatus of **FIG. 1**;

[0037] **FIG. 5** depicts a perspective view of the lower scissor jack assembly and loading plates on a turntable with the gear system of the testing apparatus of **FIG. 1**;

[0038] **FIG. 6** depicts a top view of the lower scissor jack assembly and the turntable of the testing apparatus of **FIG.1**;

[0039] **FIG. 7** depicts a perspective view of the lower scissor jack assembly, the test specimen and loading plates on the turntable with the gear system of the testing apparatus of **FIG. 1**;

[0040] **FIG. 8** depicts a perspective view of the loading plate and the strain gauges of the testing apparatus of **FIG. 1**;

[0041] **FIG. 9** depicts a first variant of the tension grip assembly of the testing apparatus of **FIG. 1**;

[0042] **FIG. 10** depicts a first variant of the compression grip assembly of the testing apparatus of **FIG. 1**;

[0043] **FIG. 11** depicts a sliding coupling connection joining a stepper motor to a power screw-gear; and

[0044] **FIG. 12** depicts a variant of the power screw-gear arrangement.

DETAILED DESCRIPTION OF THE INVENTION

[0045] Referring now to **FIGS. 1-3**, a compact testing apparatus **10** is shown in which the apparatus comprises an upper scissor jack assembly **11**, a lower scissor jack assembly **12**, a turntable **13** and a support base **14** (preferably sized for tabletop use). For

testing, a test specimen **100** is positioned within the apparatus **10**.

[0046] The upper scissor jack assembly **11** comprises a four-bar linkage **21**, hinged in a rhombus shape (similar to an automotive scissor jack) and a power (lead) screw-gear **22**. The four hinges of the upper jack assembly **11** are supported by upper assembly support brackets **23**, **27**, **28** and **34** in which the support brackets are rigidly connected to the fixed base **14**.

[0047] The screw-gear **22** is activated by a first stepper motor **38** that is controllable by a computer (not shown) thru an electronic driver **91**, a data acquisition board **92** and a serial port **94**.

[0048] The lower scissor jack assembly **12**, similar to the upper scissor jack assembly **11**, comprises a four bar linkage **51** hinged in a rhombus shape and a power (lead) screw-gear **52**. The hinges of the lower scissor jack assembly **12** are supported by the turntable **13**. The screw-gear **52** of the lower scissor jack assembly **12** is activated by a second stepper motor **64** that is computer-controlled through the serial port **94**, the data acquisition board **92** and an electronic driver **95**. The turntable **13** is activated by a third stepper motor **84** that is computer-controlled through the serial port **94**, the data acquisition board **92** and an electronic driver **96**.

[0049] The testing apparatus **10** also includes a strain indicator **90** that is electrically connected to at least four strain gauges **75** (See **FIG. 8**) in which the gauges measure the strain subjected by the test specimen **100**. In addition, the

testing apparatus **10** has a standard power supply **93** for the data acquisition board **92**, the electronic drivers **91**, **95** and **96** and the strain indicator **90**.

[0050] Referring now to **FIG. 4**, the four linkages **21** of the upper scissor jack assembly **11** are hinged at screw-gear hinges **33** and **65** and at loading hinges **31**. The loading hinges **31** are connected to loading supports **24** and **39** on either side of the loading hinges.

[0051] The loading support **24** is axially engaged with a sliding shaft **25** that is rigidly connected to the support bracket **27** such that the loading support can slide axially over the shaft. The loading support **39** is axially engaged with a sliding shaft **26** that is rigidly connected to a horizontal connector **19** and the vertical support brackets **28**. The loading support **39** can slide axially over the sliding shaft **26**. Both the sliding shafts **25** and **26** restrain the displacement of the loading hinges **31** to a co-linear motion that is perpendicular to the axis of the screw-gear **22**.

[0052] The screw-gear hinge **33** that is located at the proximal end of the screw-gear **22** has a nut **60** that is engaged with the screw-gear and a displacement pin **57** that slides linearly in a slot (indent) **29** that is located on the horizontal plane of the support **23**.

[0053] The screw-gear hinge **65** that is located at the distal end of the screw-gear **22** has a nut **66** that is engaged with the screw-gear and the pin **57** that slides linearly in a slot (indent) **35** (**See FIG. 1**) in which the slot is located on the horizontal

plane of the upper assembly support bracket **34**. The slots **29** and **35** restrain the displacement of the screw-gear hinges **33** and **65** to a co-linear motion that is perpendicular to a reference line indicating a position of the loading hinges **31**. The support brackets **23** and **34** are rigidly connected to the base **14**.

[0054] The upper scissor jack assembly **11** also has two loading plate assemblies **32** that are rigidly attached to the loading supports **24** and **39**. The loading plate assemblies **32** extend below the plane of the upper scissor jack assembly **11** such that when two ends of the test specimen **100** are clamped to the distal ends of the loading plates; the specimen does not contact the screw-gear **22**.

[0055] In the figure, the first stepper motor **38** is shown mounted on a motor support bracket **37** and to the upper assembly support bracket **34**; however the first stepper motor may be directly affixed to the base **14**. The shaft of the stepper motor **38** is axially and operationally connected to the power screw-gear **22** through a coupling shaft **36**. The coupling shaft **36** has a pin **85** and a slot **86** (**See FIG. 11**) that transfers the torque of the shaft of the stepper motor **38** to the power screw-gear **22** while allowing limited axial displacement between the shaft and the screw-gear. There is a limiting switch **62** on the proximal end of the slot **29** that stops the stepper motor **38** when the hinge reaches the proximal end of the slot; thereby, preventing the upper scissor jack assembly **11** from overextending.

[0056] Referring to **FIG. 5**, **6** and **7**, the linkages **51** of the lower scissor jack assembly **12** are hinged at screw-gear hinges **53**

and **67** and two pairs of loading hinges **68**. The lower scissor jack assembly **12** also includes a power screw-gear **52** and the second stepper motor **64**. The loading hinges **68** are connected to two loading supports **54** on either side of the loading hinges. The axis of the screw-gear **52** is generally perpendicular and on a parallel plane to the axis of the screw-gear **22** of the upper scissor jack assembly **11**. That is, in operation, the lower scissor jack assembly **12** is rotated ninety degrees with respect to the upper scissor jack assembly **11**.

[0057] The screw-gear hinge **53** of the lower scissor jack assembly **12** has a nut **60** that is engaged with the screw-gear **52** and a displacement pin (not shown) that slides linearly in a slot **55** which is located on the horizontal plane of the turntable **13**. The screw-gear hinge **67** has a nut **60** that is engaged with the screw-gear **52**. The slots **55**, on either sides of the screw-gear **52**, both restrain the displacement of the screw-gear hinges **53** and **67** to a co-linear motion that is perpendicular to a reference line indicating the position of the loading hinges **68**.

[0058] The loading hinges **68** have displacement pins at their inferior surface (not shown) that slide linearly in a slot (not shown) that is located on the horizontal plane of the turntable **13**. The slots restrain the displacement of the loading hinges **68** to a co-linear motion that is perpendicular to a reference line indicating the position of the screw-gear hinges **53** and **67**. The lower scissor jack assembly **12** is supported by the turntable **13** through the pin and slot configuration.

[0059] The lower scissor jack assembly **12** has two loading plates **61** that are rigidly attached to the loading supports **54**. The loading plates **61** extend above the plane of the lower scissor jack assembly **12** such that when two ends of the test specimen **100** are clamped to the distal ends of the loading plates; the specimen does not contact the screw-gear **52**. The height of the distal ends of the loading plates **61** of the lower scissor jack assembly **12** is at the same level of the height of the distal ends of the loading plate assemblies **32** of the upper scissor jack assembly **11** such that the plane of the test specimen **100** is horizontal when four sides of the specimen are clamped to the four loading plates.

[0060] The second stepper motor **64** is rigidly connected to a bracket **58** and to the turntable **13** (**See FIG. 6**). The shaft of the second stepper motor **64** is axially and operationally connected to the screw-gear **52** through a coupling shaft **59**. The coupling shaft **59** has a pin **85** and a slot **86** (**See FIG. 11**) that transfers the torque of the shaft to the power screw-gear **52** while allowing limited axial displacement between the shaft and the screw-gear. There is a limiting switch **63** on the distal end of the slot **55**, proximate to the screw-gear hinge **53**. This limiting switch **63** is used to stop the stepper motor **64** when the hinge **53** reaches the proximal end of the slot; thereby, preventing the lower scissor jack assembly **12** from overextending.

[0061] Referring to **FIG. 7**, the turntable **13** comprises a planar circular disc, a gear **82**, a pinion gear **83** and the third stepper motor **84**. The gear **82** is coaxial to the turntable **13** and is engaged with the pinion gear **83**. The third stepper motor **84** is

rigidly connected to the supporting base **14** and electrically connected to the electronic driver **96** (shown in **FIG. 1**).

[0062] Upon energizing the third stepper motor **84**, the turntable **13** can rotate clockwise or counter-clockwise, thereby rotating the lower scissor jack assembly **12** with respect to the upper scissor jack assembly **11**. To restrict the angle of rotation, two contact limiting switches **30** (shown in **FIG. 1** and **FIG. 4**) are attached to the sides of the support brackets **28**. The distance between the sides and the contact limiting switches **30** of the support brackets **28** confines the maximum relative rotation of the lower scissor jack assembly **12** with respect to the upper scissor jack assembly **11**. That is, the maximum shear angle of the test specimen **100** is defined by the distance between the support brackets **28** because the contact limiting switches **30** electrically stop the rotation of the turntable **13** when contacted and therefore stops shearing of the specimen.

[0063] Referring to **FIG. 8**, the loading plate assembly **32** comprises an L-shape bracket **78** having an extension **79**, a distal end **80** and a locking plate **72**. The extension **79** has two strain gauges **75** attached to adjacent surfaces. In one embodiment, the distal end **80** has a slot **71**, the locking plate **72** and a plurality of screws **73**. The fabric test specimen **100** is clamped between the locking plate **72** and the slot **71** (in a tongue and groove manner) by tightening the screws **73**.

[0064] When the test specimen **100** is not a fabric, but instead is a solid object, and is to be subjected to a tension, another embodiment, may be used. The embodiment includes a standard

tension grip **76** (shown in **FIG. 9**) will replace the distal end of the loading plate assembly **32**. Likewise, when the test specimen **100** is not a fabric, but rather is a solid object, and is to be subjected to a compression, another embodiment, may be used. The embodiment which includes a compression grip **77** (shown in **FIG. 10**) will replace the distal end of the loading plate assembly **32**. The strain gauges **75** are electrically connected to the strain gauge indicator **90** where the strain (and the stress) of the test specimen **100** in is measured.

[0065] An upper surface **69** of the bracket **78** is rigidly connected to the corresponding loading support of the upper and lower scissor jack assemblies. Specifically, the upper surface **69** of one loading plate assembly **32** is rigidly connected to the lower surface of the loading support **24**. Likewise another loading plate is rigidly connected to the lower surface of the loading support **39** (**See FIG. 4**). Also, the upper surface **69** of the loading plate assembly **32** is rigidly connected to the upper surface of the loading support **54**, on the side of lower scissor jack assembly **12**, likewise an other loading plate is rigidly connected to the upper surface of the loading support **54**, on the another side of the lower jack assembly **12**. (**See FIG. 5**).

[0066] Operation of the testing assembly **10** involves clamping sides of the test specimen **100** to the distal clamping ends of the four loading plates assemblies (Note that two of the loading plate assemblies **32** are rigidly connected to the loading supports of the upper scissor jack assembly **11** and the other two of the loading

plate assemblies **61** are rigidly connected to the loading supports of lower scissor jack assembly **12**).

[0067] For tensile loading of planar solids, a tension grip **76** is used (**See FIG. 9**) and for compressive loading, a compression grip **77** is used (**See FIG. 10**), and for fabric, the tongue and groove clamping is used (**See FIG. 8**). Second, through a laptop or desktop computer and by using standard testing software or standard C++ programming; the digital computer commands are transferred to the stepper motor drivers through the data acquisition (DAQ) device. That is, through a computer command each of the stepper motors are energized and the test specimen **100** will be subjected to a combination of biaxial tension, compression or in-plane shear. The strains of the test specimen **100** will be measured by the strain gauge indicator and fed back through the DAQ device to the computer. The rotation of the turntable **13**, or the angle of in-plane shear, is measured and controlled through the corresponding electronic driver.

[0068] Upon energizing the stepper motor **38** and rotating a output shaft of the stepper motor in a clockwise or counter-clockwise direction; the screw-gear hinges **33** and **65** move toward or away from each other, while the loading hinges **31** move conversely away or toward each other. Note that the movements of the hinges are restrained by the slots (**29**, **35**) and the sliding shafts (**25**, **26**). Therefore, by activating the gear of the motor **38** in a clockwise and a counter-clockwise rotation, the test specimen **100** will be subjected to a tension or a compression load

through the direct connection of the specimen with the loading plate assemblies **32** connected to the loading supports **24** and **39**.

[0069] The limiting switch **62** limits the maximum expansion of the upper scissor jack assembly **11**. Likewise, upon energizing the stepper motor **64** and rotating an output shaft of the motor in a clockwise or counter-clockwise direction, the screw-gear hinges **53** and **67** move toward or away from each other, while the loading hinges **68** move conversely away or toward each other (See **FIG. 5** and **FIG. 6**). Note that the movements of the hinges are restrained by the four slots **55** on the turntable **13**. Therefore, by rotating the gear shaft of the stepper motor **64** in the clockwise or counter-clockwise direction, the test specimen **100** will be subjected to a tension or a compression load through the direct connection of the specimen with the two loading plates **61**. The limiting switch **63** limits the expansion of the lower scissor jack assembly **12**.

[0070] Finally, upon energizing the third stepper motor **84** in a clockwise or counter-clockwise direction; the turntable **13** including the lower scissor jack assembly **12** will turn in either the clockwise or counter-clockwise direction. Therefore, both loading plates **61** rotate in a clockwise or counter-clockwise direction and apply the in-plane shear in a clockwise or counter-clockwise to the test specimen **100**.

[0071] In addition to the usage of the previously mentioned strain gauges, conventional measurement equipment systems such as force transducers can be utilized to measure forces/loads applied to the test specimen. Also, a conventional displacement wire

transducer, or a conventional Linear Variable Displacement Transducer (LVDT) can be placed on the loading plates to measure the total biaxial displacements, rotation and strains of the test specimen **100**.

[0072] It is important to note that the testing apparatus **10** can apply a non-equi biaxial loading ratio in that the tension/compression and the displacements in each direction can be different and independent.

[0073] A first variant of operation is to use the testing apparatus **10** for a non-orthogonal (oblique) biaxial loading of the test specimen **100**. This use is particularly important for testing of braided fabrics and non-orthogonal composite materials. To accomplish this task the stepper motor **84** of the turntable **13** is energized and the angle between the two axes of the applied load, i.e., the angle between the upper and the lower jack, can be adjusted to a desired oblique test specimen.

[0074] A second variant of operation is to use the testing apparatus **10** for the alternative modes of loading the test specimen **100**: uniaxial tension, uniaxial compression, biaxial tension, biaxial compression, uniaxial tension with in-plane shear, uniaxial compression with in-plane shear, biaxial tension with in-plane shear, biaxial compression with in-plane shear, unequal biaxial tension with in-plane shear and unequal biaxial compression with in-plane shear.

[0075] An alternative power screw-gear arrangement is shown in **FIG. 12** that enables visual access for viewing and video recording of the specimen **100** during testing. This alternative, which also

makes installation of the test specimen **100** simpler, replaces the power screw-gear **22** with two truncated power screw-gears **40**, **42** aligned along the upper axis. The truncated power screw-gears **40**, **42** are operated in a synchronized manner using one stepper motor **38**, **98** for each power screw-gear. The limiting switch **62** can be used to inactivate the stepper motor for each screw-gear.

[0076] It will be understood that many additional changes in the details, materials, steps and arrangement of parts, which have been herein described and illustrated in order to explain the nature of the invention, may be made by those skilled in the art within the principle and scope of the invention as expressed in the appended claims.

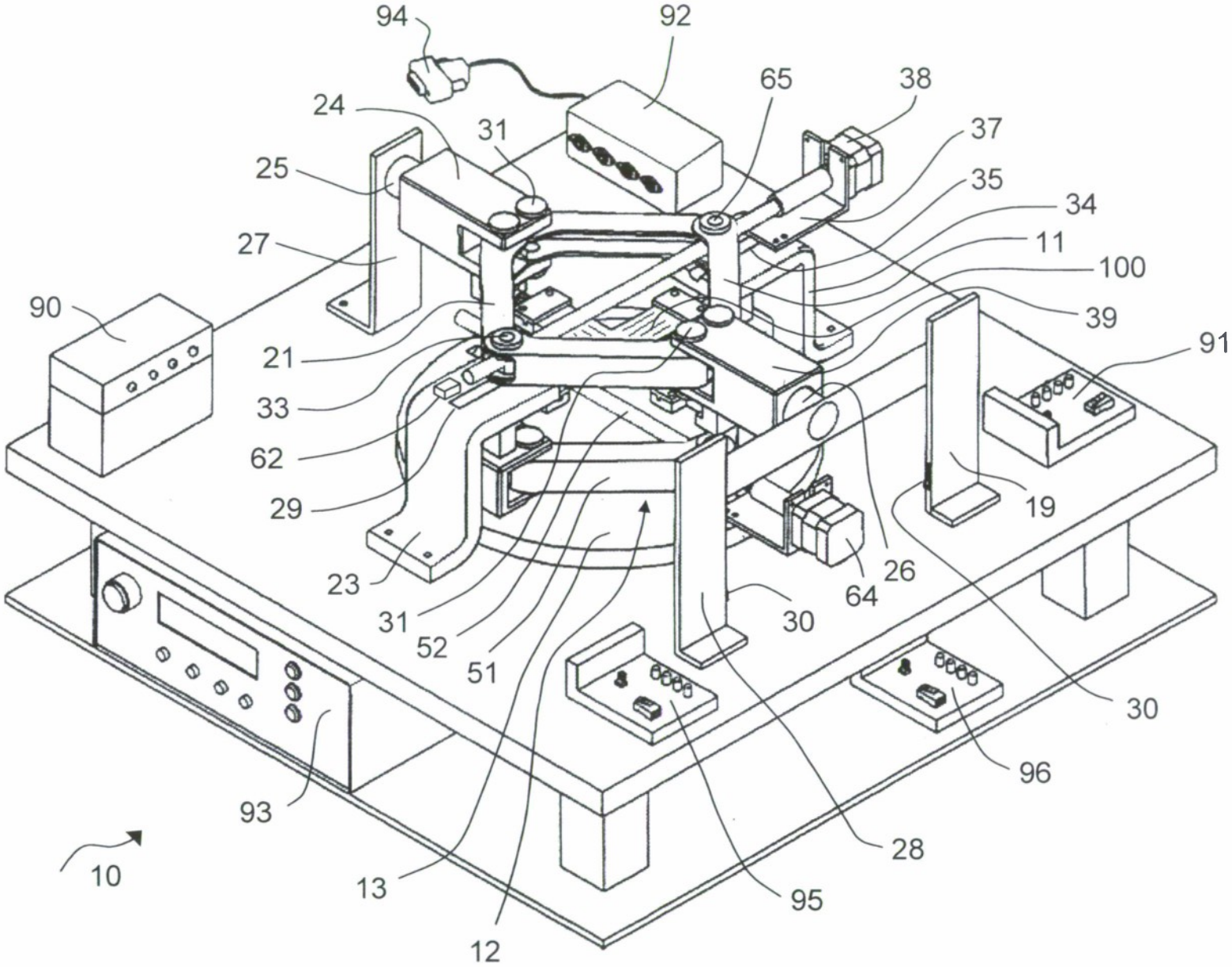
94
92
65
38
24
31
37
25
35
34
27
11
100
90
39
91
21
33
62
29
19
23
26
64
31
52
51
30
30
96
93
28
10
13
95
12

FIG. 1

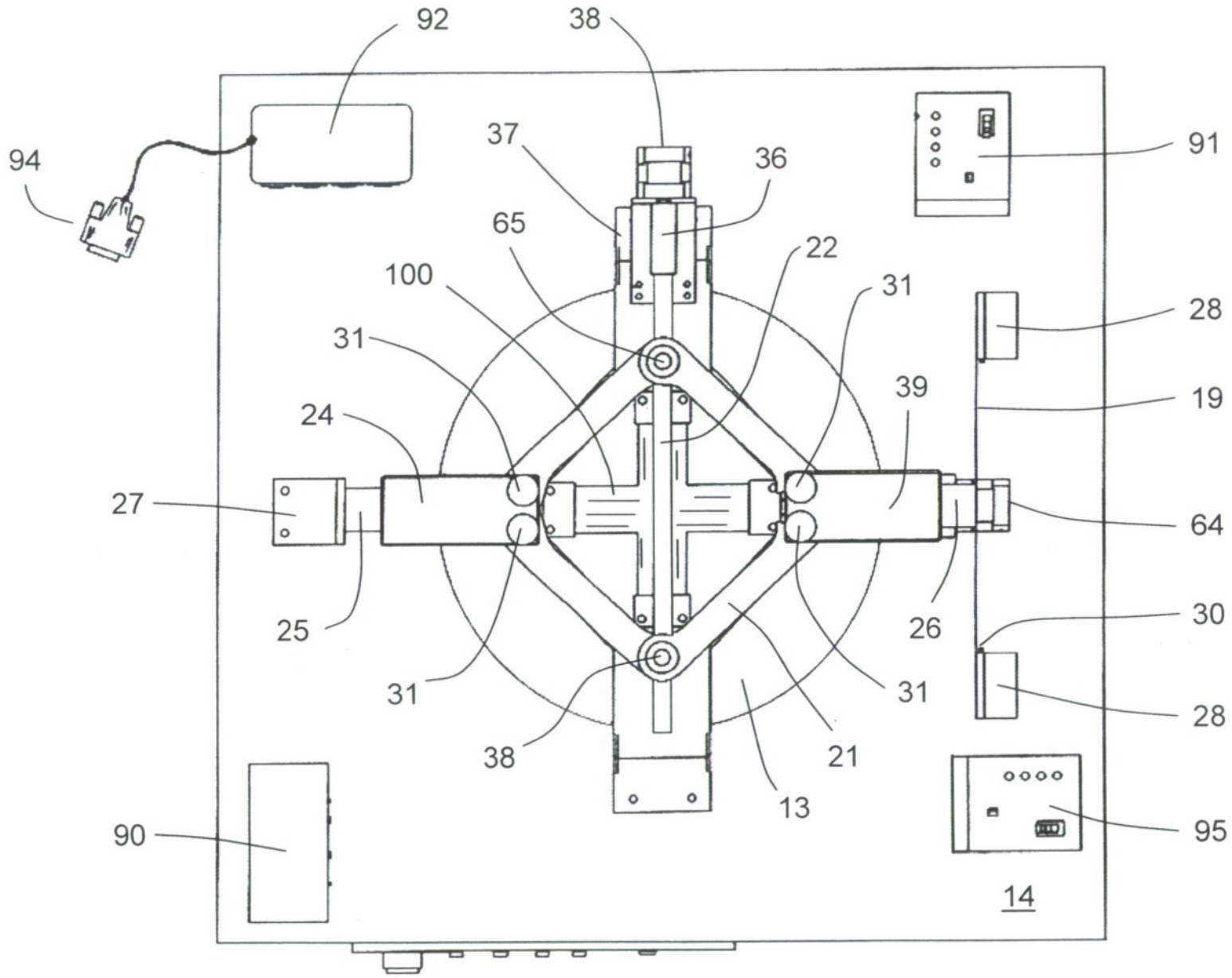
92
38
94
37
36
91
65
22
100
31
28
31
39
19
24
27
64
25
26
30
31
31
28
38
21
13
90
95
14

FIG. 2

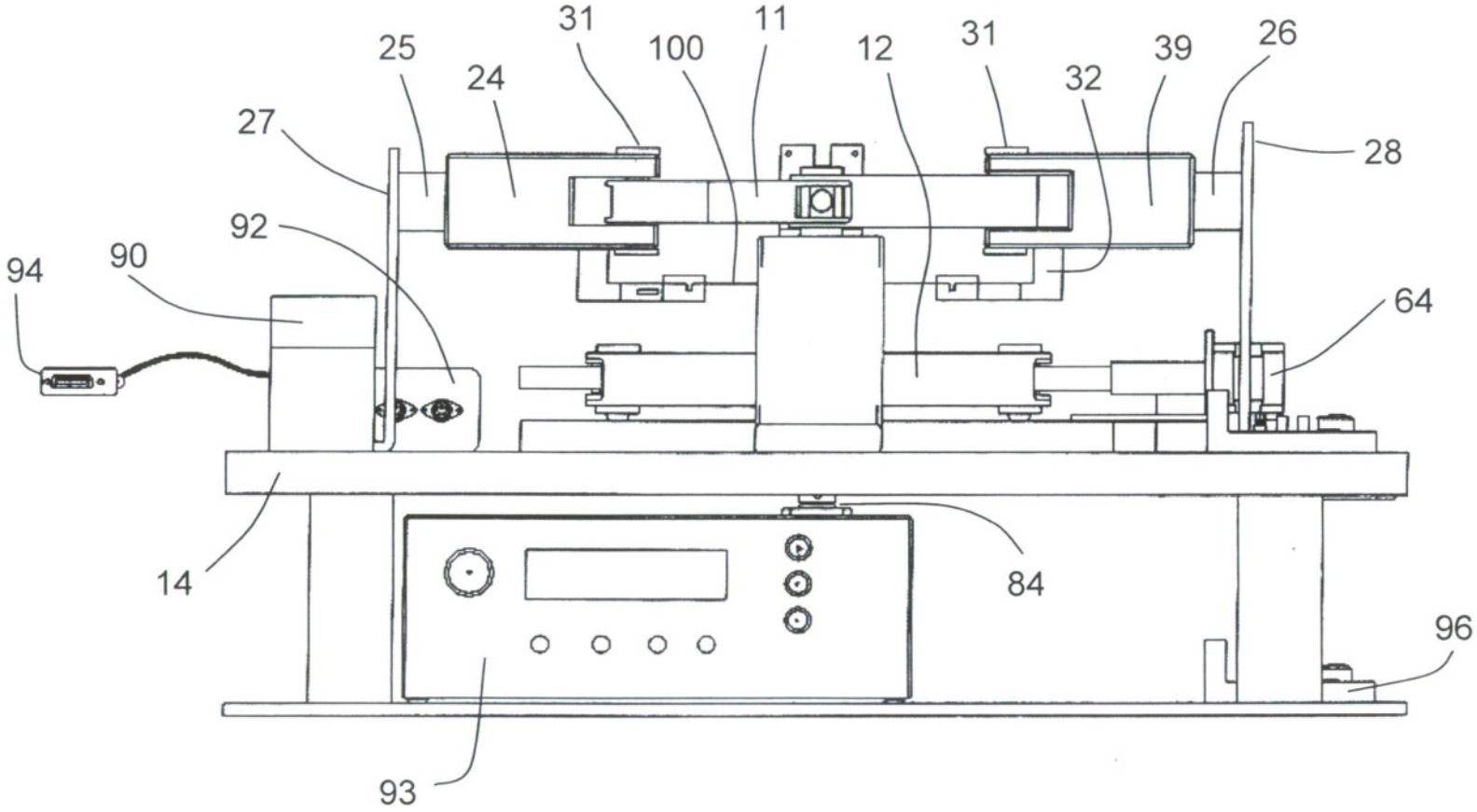

FIG. 3

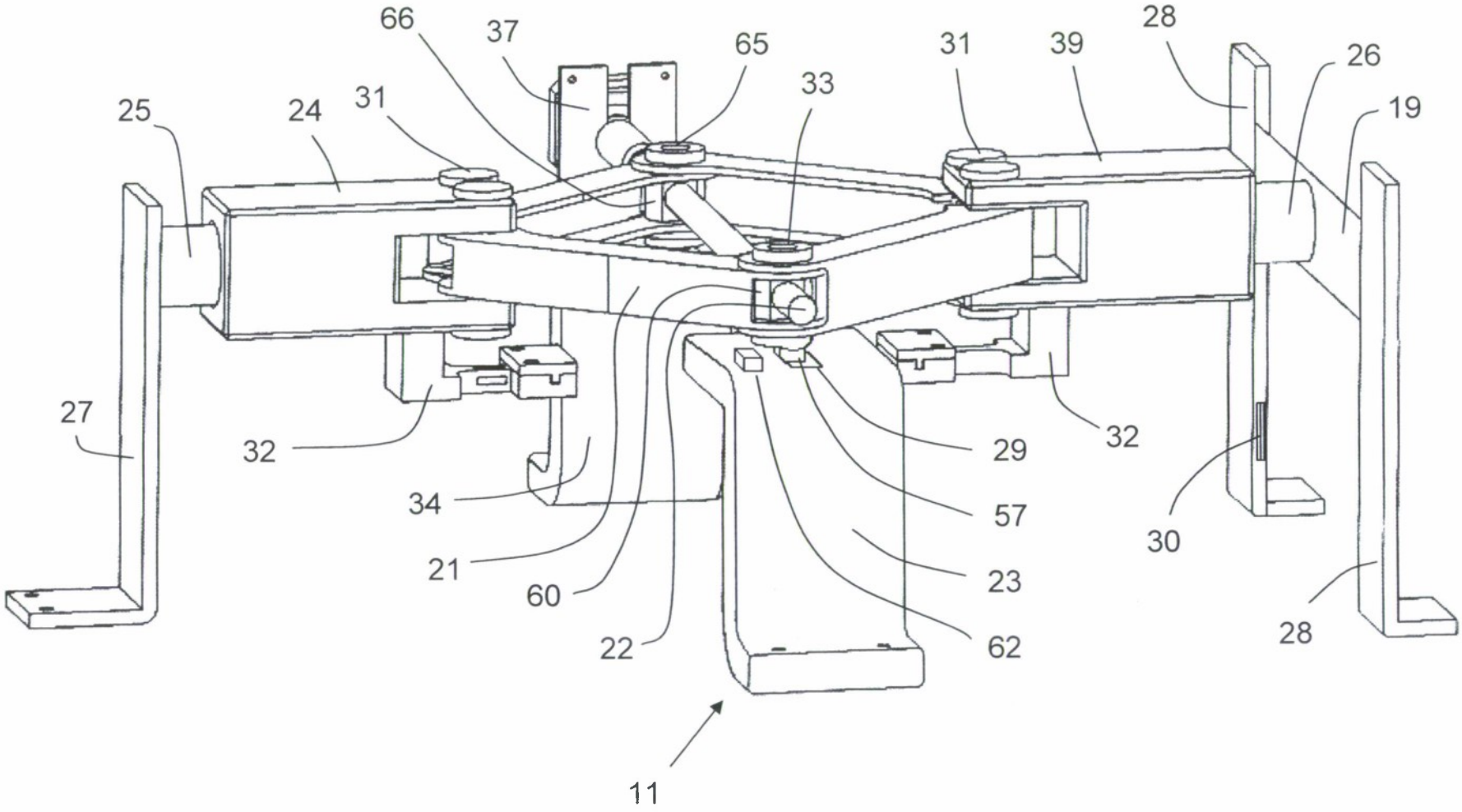
66
37
65
31
39
28
26
19
25
24
31
33
27
32
34
21
60
22
29
57
23
62
32
30
28
11

FIG. 4

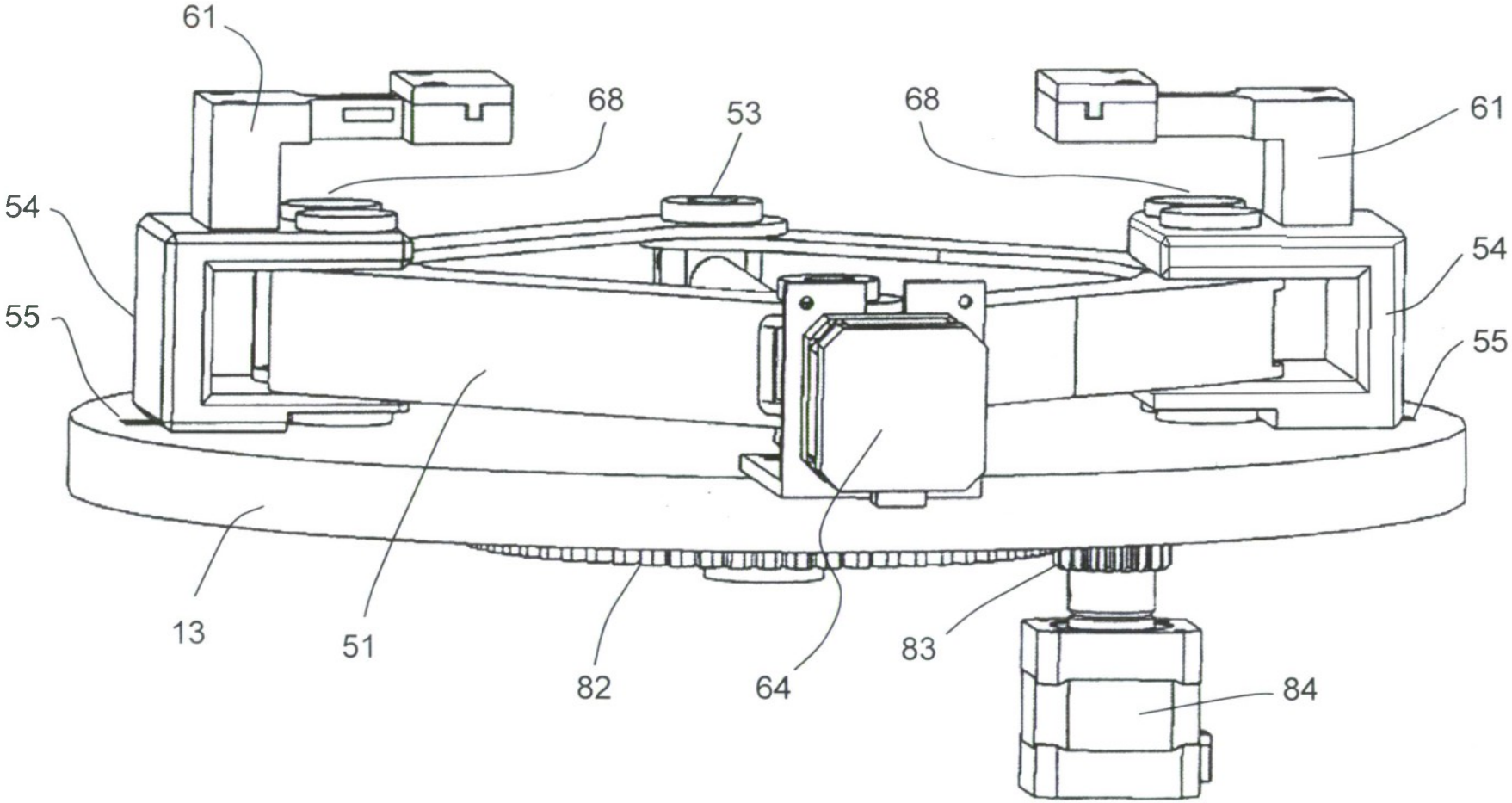

FIG. 5

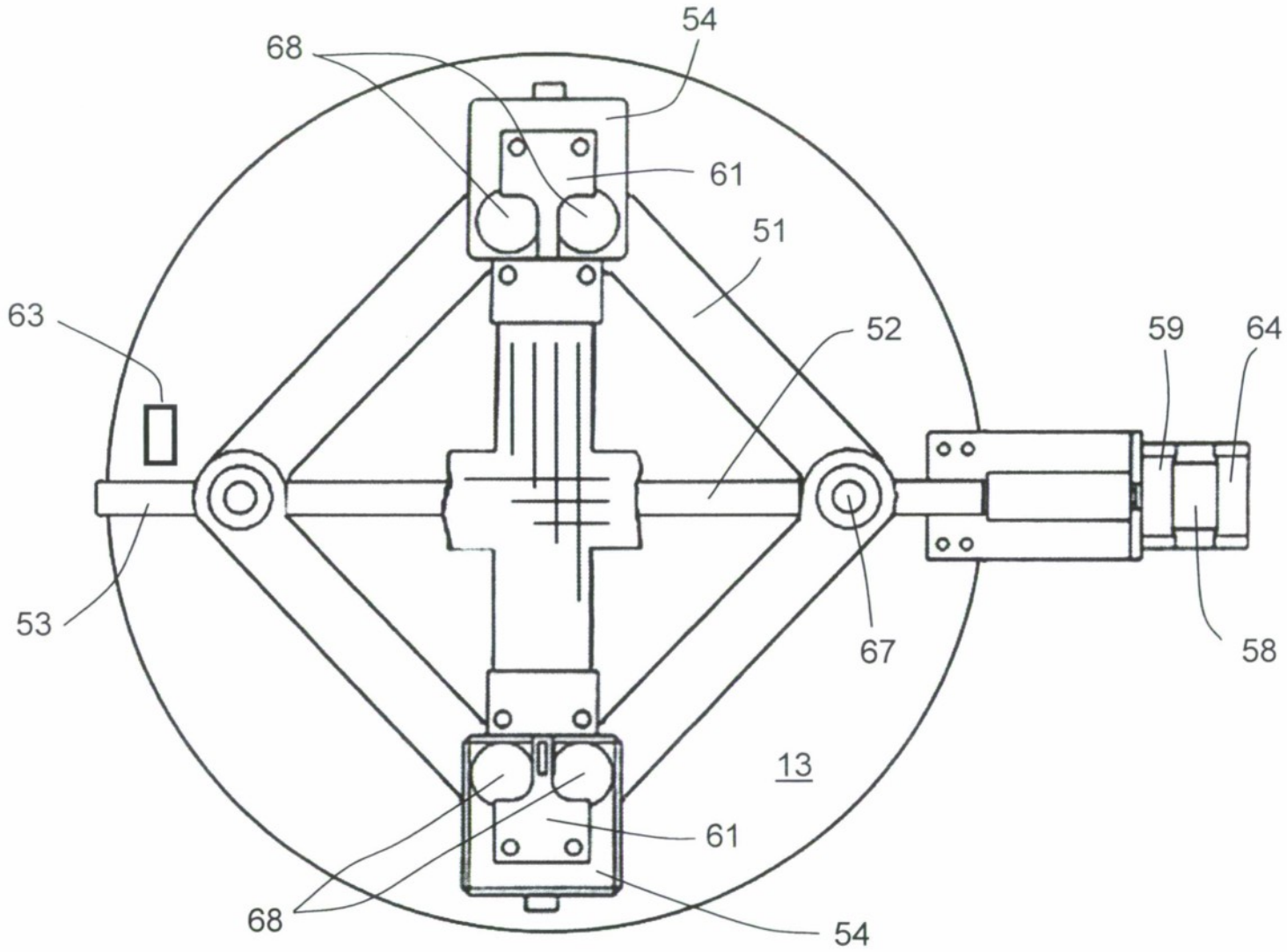

FIG. 6

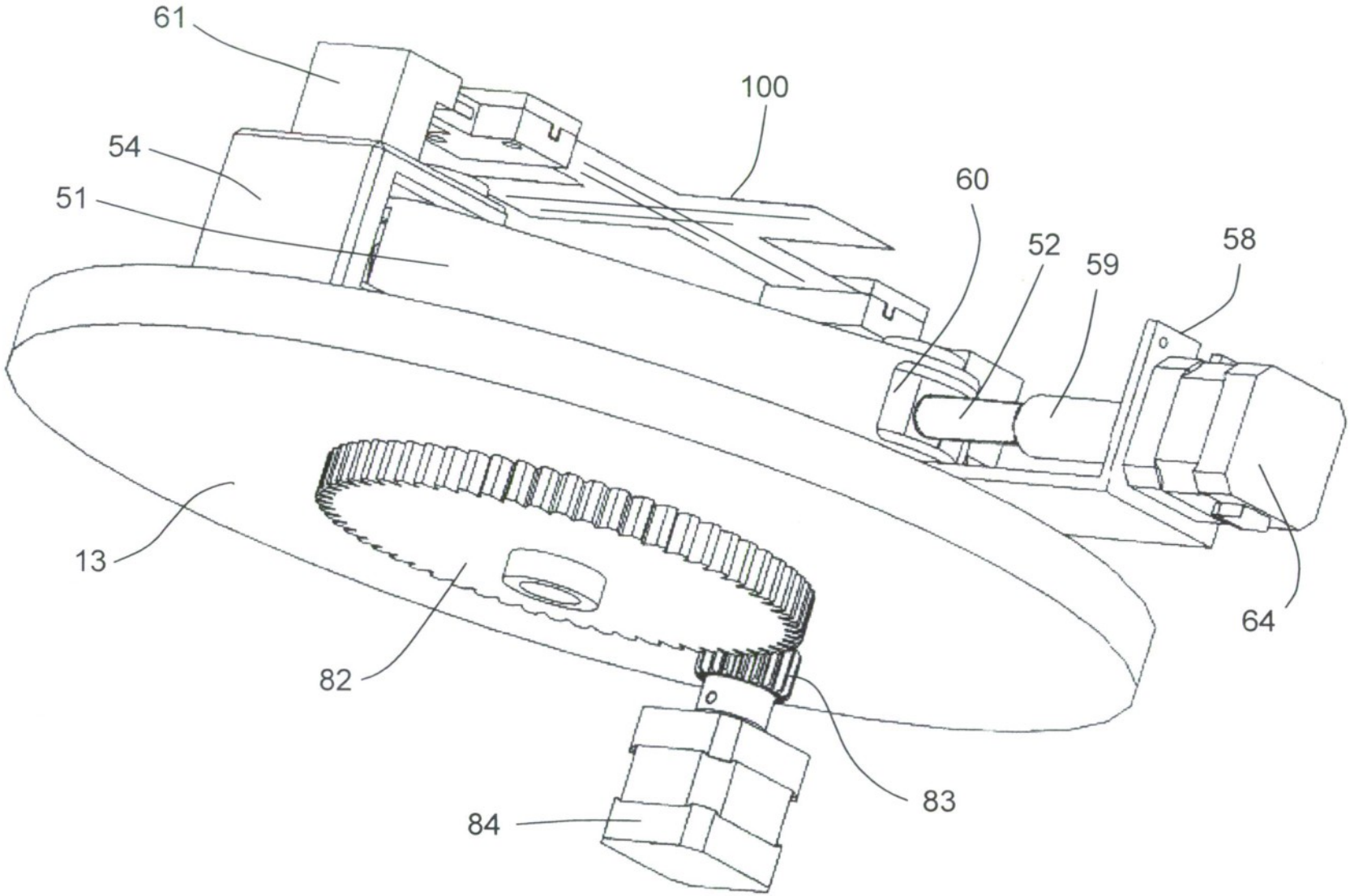

FIG. 7

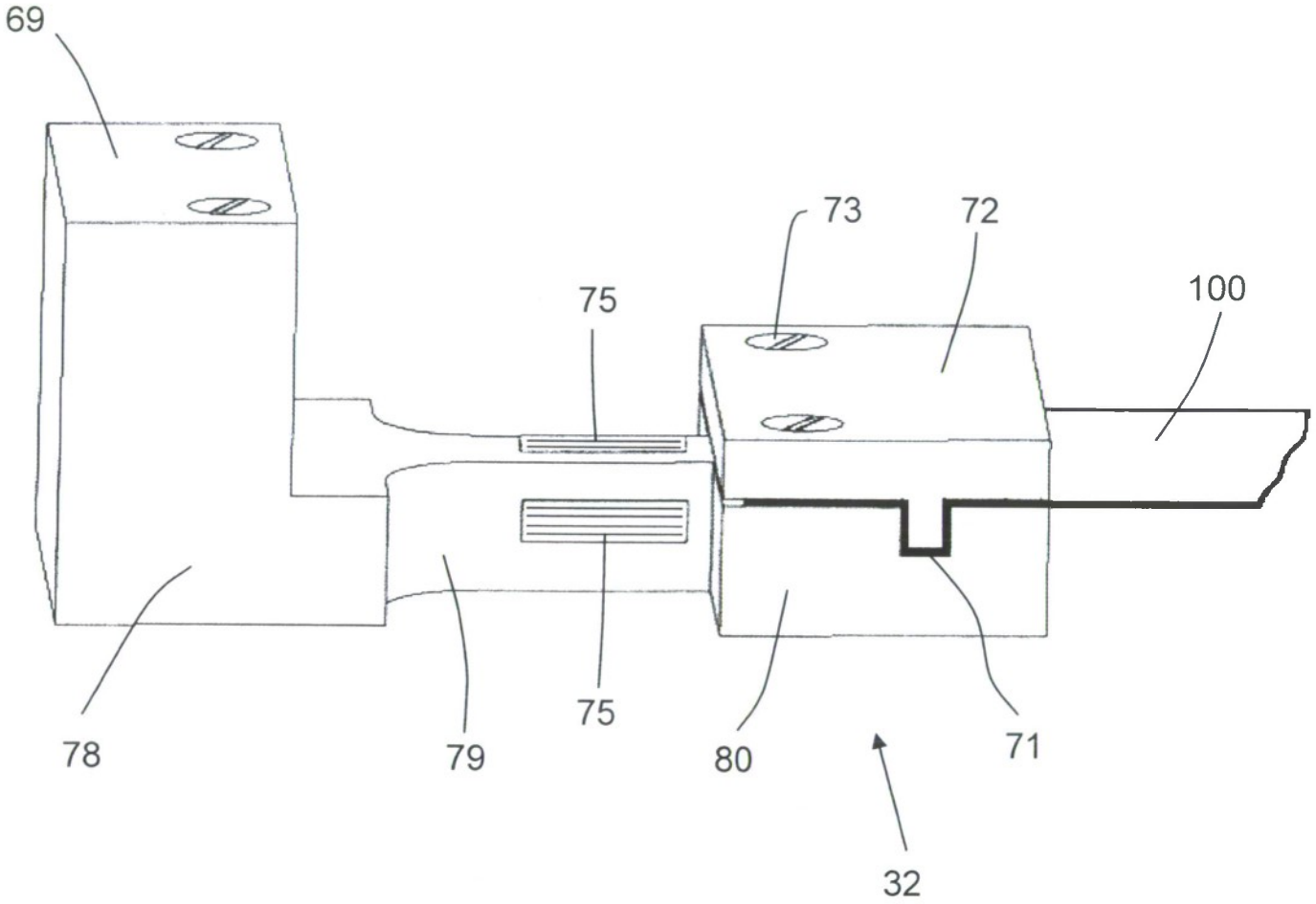

FIG. 8

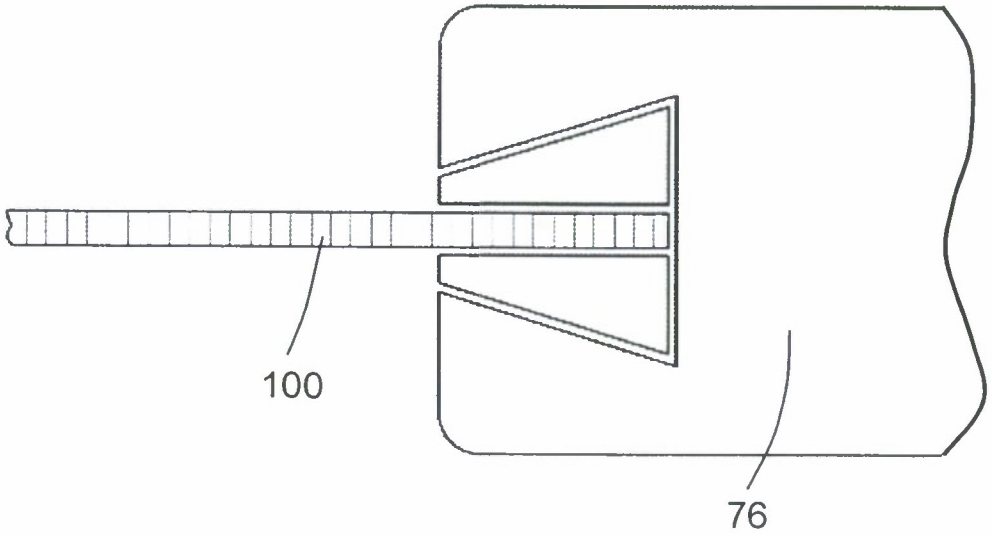

FIG. 9

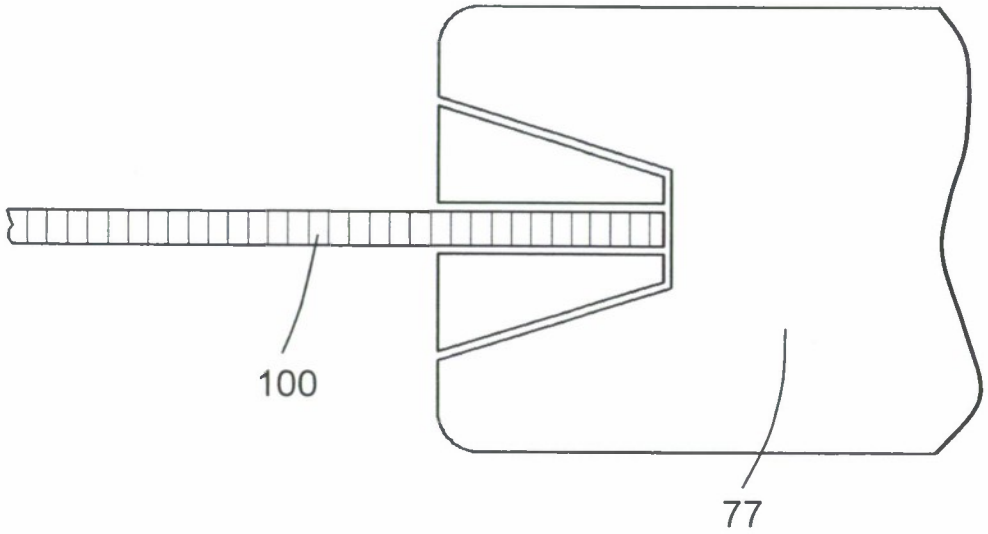

FIG. 10

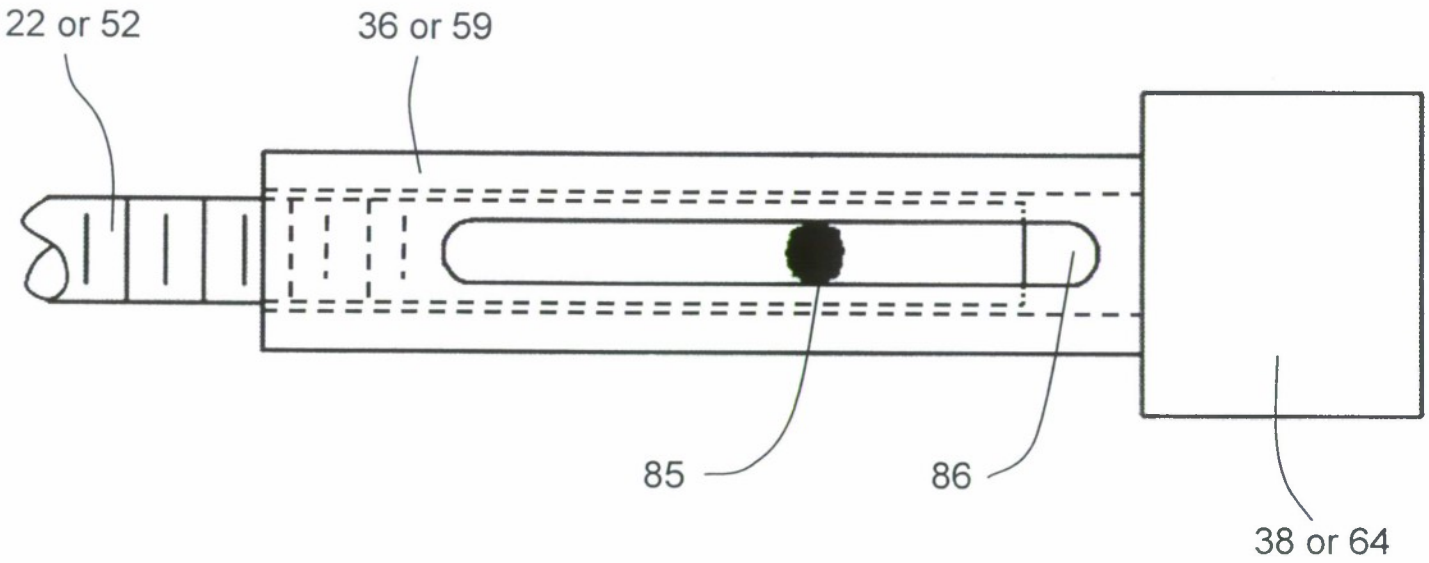

FIG. 11

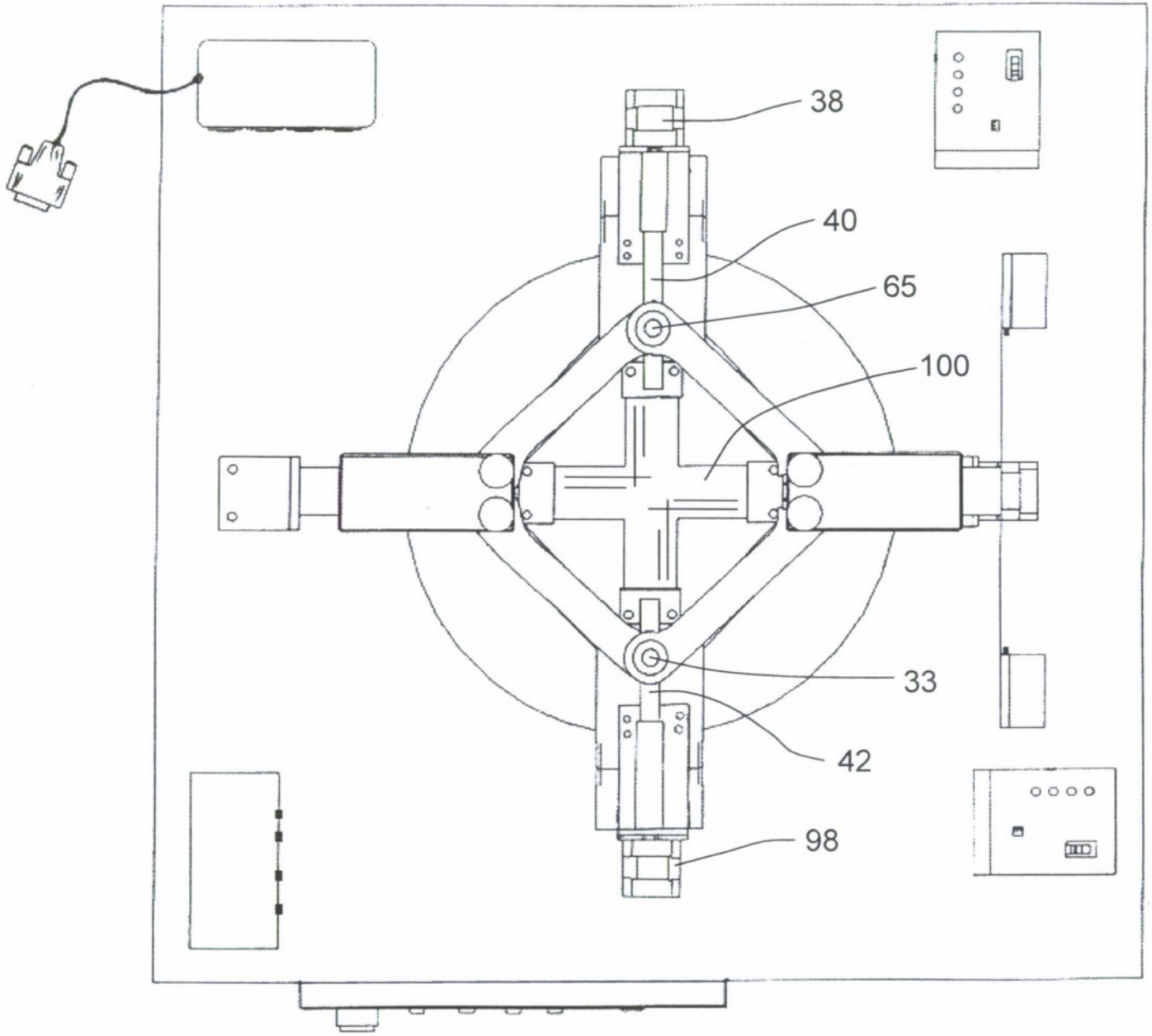

FIG. 12

Attorney Docket No. 99605

COMPACT AND STAND-ALONE COMBINED MULTI-AXIAL AND SHEAR TEST APPARATUS

ABSTRACT OF THE DISCLOSURE

A testing apparatus is disclosed that includes a turntable, an upper scissor jack assembly and a lower scissor jack assembly positioned in parallel planes, about a longitudinal axis and affixed to a base. The apparatus is powered by at least three motors with supporting controllers. The lower assembly is affixed to the base mechanically via the turntable which allows the lower assembly to rotate with respect to the upper assembly. There are two loading plates attached to the hinges of each scissor jack. The test specimen is secured by the loading plate. Each scissor jack operates by a screw-gear powered by one of the motors. Upon energizing a stepper motor; the screw-gear positions a scissor jack to apply a tension or compression on the specimen. While subjected to tension or compression, the lower jack assembly can be rotated with respect to the upper assembly for in-plane shear loading.