DEPARTMENT OF THE NAVY

OFFICE OF COUNSEL
NAVAL UNDERSEA WARFARE CENTER DIVISION
1176 HOWELL STREET
NEWPORT RI 02841-1708

IN REPLY REFER TO:

Attorney Docket No. 83561
Date: 07 December 2004

The below identified patent application is available for licensing. Requests for information should be addressed to:

PATENT COUNSEL
NAVAL UNDERSEA WARFARE CENTER
1176 HOWELL ST.
CODE 00OC, BLDG. 112T
NEWPORT, RI 02841

Serial Number	10/769,708
Filing Date	2 February 2004
Inventor	Kim C. Benjamin

If you have any questions please contact James M. Kasischke, Patent Counsel, at 401-832-4736.

20041213 344

DISTRIBUTION STATEMENT A
Approved for Public Release
Distribution Unlimited

Attorney Docket No. 83561
Customer No. 23523

MULTI-LAYER COMPOSITE TRANSDUCER ARRAY

TO ALL WHOM IT MAY CONCERN

BE IT KNOWN THAT KIM C. BENJAMIN, employee of the United States Government, citizen of the United States of America, and resident of Portsmouth, County of Newport, State of Rhode Island has invented certain new and useful improvements entitled as set forth above of which the following is a specification:

JAMES M. KASISCHKE, ESQ.
Reg. No. 36562
Naval Undersea Warfare Center
Division, Newport
Newport, Rhode Island 02841-1708
TEL: 401-832-4736
FAX: 401-832-1231

Attorney Docket No. 83561

MULTI-LAYER COMPOSITE TRANSDUCER ARRAY

STATEMENT OF GOVERNMENT INTEREST

The invention described herein may be manufactured and used by or for the Government of the United States of America for Governmental purposes without the payment of any royalties thereon or therefor.

BACKGROUND OF THE INVENTION

(1) Field of the Invention

The present invention relates generally to transducer arrays, and more particularly to a multi-layer composite transducer array that provides a broadband frequency response.

(2) Description of the Prior Art

A variety of sonar applications such as vehicle homing require the steering of acoustic beams. Existing homing array technology uses numerous narrowband and high-power longitudinal tonpilz resonators to form the aperture of an active transducer. Each tonpilz resonator consists of several active and inactive mechanical components that work together as a spring-mass, single degree-of-freedom system. Unfortunately, tonpilz resonators are expensive to fabricate and offer only a limited operational bandwidth above their first length mode resonance.

To address operational bandwidth limitations of tonpilz resonators, recent work has focused on constructing multi-resonance tonpilz elements using 1-3 piezocomposites as the active component. While this approach provides improved bandwidth when compared to that of the original single-mode tonpilz resonators, these devices are still limited to first order resonance. Furthermore, the fixed-size radiation head masses inherent to tonpilz resonators prevent them from being used to realize resonators that are "frequency agile".

SUMMARY OF THE INVENTION

Accordingly, it is an object of the present invention to provide a transducer array that can operate in a broadband frequency range.

Another object of the present invention is to provide a broadband transducer array that is inexpensive to fabricate.

Other objects and advantages of the present invention will become more obvious hereinafter in the specification and drawings.

In accordance with the present invention, a multi-layer composite transducer array includes at least one pair of composite transducers with a layer of dielectric material segments interposed therebetween. Each composite transducer is defined by a piezoelectric polymer composite panel having opposing first and second surfaces with at least one common electrode coupled to the first surface and a plurality of

electrode segments electrically isolated from one another and coupled to the second surface. Each pair of composite transducers is configured such that the electrode segments associated with a first composite transducer oppose and are aligned with the electrode segments associated with a second composite transducer. Each dielectric material segment in the layer thereof is sized, shaped and aligned in correspondence with opposing and aligned ones of the electrode segments associated with the first and second composite transducers. Spaces formed in the layer between the dielectric material segments are filled with a viscoelastic material.

BRIEF DESCRIPTION OF THE DRAWINGS

Other objects, features and advantages of the present invention will become apparent upon reference to the following description of the preferred embodiments and to the drawings, wherein corresponding reference characters indicate corresponding parts throughout the several views of the drawings and wherein:

FIG. 1 is an exploded perspective view of a pair of composite transducers and an isolation layer that forms a multi-layer composite transducer array in accordance with the present invention;

FIG. 2 is a side view of an assembled embodiment of the multi-layer composite transducer array;

FIG. 3 is a side view of one of the layers of the transducer array in which the piezoelectric polymer composite panel and the electrodes coupled thereto are shaped or curved; and

FIG. 4 is a cross-sectional view of a multi-layer composite transducer array assembly for use in an underwater environment in accordance with the present invention.

DESCRIPTION OF THE PREFERRED EMBODIMENT(S)

Referring now to the drawings, simultaneous reference will be made to FIGs. 1 and 2 where a multi-layer composite transducer array is shown and referenced generally by numeral 100. More specifically, FIG. 1 is an exploded perspective view depicting a pair of composite transducers having a segmented electrode surface and isolation layer disposed between the composite transducers, and FIG. 2 is a side view of an assembled embodiment of the multi-layer array.

Array 100 has a pair of composite transducers 102 and 104 with an electrical and mechanical isolation layer 106 disposed therebetween. Each of composite transducers 102 and 104 is identically constructed so that the following description of composite transducer 102 applies to composite transducer 104. A plurality of electrode segments 12 are supported on a first major surface of a piezoelectric polymer composite panel 20. The number, size and shape of electrode segments is not a limitation of the present invention. Details of a suitable composite panel 20 are described in U.S. Patent No. 6,255,761, the contents of

which are hereby incorporated by reference. Briefly, composite panel 20 is constructed using spaced-apart piezoelectric (e.g., a ferroelectric material such as piezoceramic materials lead zirconate titanate or lead titanate) columns or rods 22 that span the thickness or height H of composite panel 20. Filling the spaces between rods 22 for the full height thereof is a viscoelastic material 24 such as a thermoplastic epoxy.

Each of electrode segments 12 can have a dedicated electrical lead coupled thereto. This can be accomplished by passing conductors (e.g., conductors 31 and 32 are illustrated in FIG. 2) through a side of composite panel 20. More specifically, each of conductors 31 and 32 is routed through viscoelastic material 24 and electrically coupled to one of electrode segments 12. The second major surface of composite panel 20 has a single common electrode 40 that substantially spans and is coupled to composite panel 20. Note, however, that the single common electrode 40 could be replaced with a plurality of common electrodes (i.e., at the same potential) without departing form the scope of the present invention. Typically, the height H of composite panel 20 is the same throughout so that planes defined by electrode segments 12 and common electrode 40 are parallel to one another.

Each layer of the multi-layer array can also be shaped to conform to simple or complex contours if viscoelastic material 24 comprises a thermoplastic material such as thermoplastic epoxy. For example, as illustrated in FIG. 3, composite panel 20 has

been shaped (e.g., by heating) such that the planes defined by electrode segments 12 and common electrode 40 are curved in correspondence with one another and composite panel 20.

Composite transducers 102 and 104 are configured and positioned in array 100 such that electrode segments 12 on composite transducer 102 oppose and are aligned with electrode segments on composite transducer 104. Separating composite transducers 102 and 104 is isolation layer 106 that consists of dielectric material segments 50 extending through layer 106 and a viscoelastic material 52 that can be the same material as that used for viscoelastic material 24. Each of dielectric material segments 50 is sized, shaped and aligned with opposing and aligned ones of electrode segments 12 from composite transducers 102 and 104. Since electrode segments 12 are electrically isolated from one another by spaces therebetween, similar spaces are formed between dielectric material segments 50. The spaces between segments 50 (and regions surrounding segments 50 up to the edges of array 100) are filled with viscoelastic material 52. In this way, dielectric material segments 50 provide the needed electrical isolation between opposing electrodes 12 on composite transducers 102 and 104, while viscoelastic material 52 provides mechanical damping and isolation between composite transducers 102 and 104.

Composite transducers 102 and 104 are typically bonded to isolation layer 106 by an adhesive 108 so that no external type of clamping is required to hold array 100 together. Any

commercially-available structural adhesive can be used provided it is acoustically transparent and can withstand the rigors of the environment in which array 100 is to be deployed.

The multi-layer composite transducer array described herein can be used as part of an underwater array assembly such as assembly 200 illustrated in FIG. 4 where like reference numerals are used to describe the elements incorporated into assembly 200. A waterproof housing (e.g., a waterproof encapsulant) 202 has one or more arrays 100 (e.g., two are shown) fitted and sealed therein. An acoustic absorbing material 204 (e.g., a particle-filled epoxy) partially fills waterproof housing 202. The lowermost composite transducer in the stack of multi-layer arrays 100 is coupled to acoustic absorbing material 204 by means of adhesive 108. More specifically, common electrode 40 of the lowermost composite transducer is adhered to acoustic absorbing material 204. At the other end of the stack of multi-layer arrays 100, common electrode 40 of the uppermost composite transducer abuts waterproof housing 202. Note that this portion of waterproof housing 202 must be acoustically transparent to facilitate the transmission of sound waves. Another isolation layer 106 is disposed between arrays 100 and is coupled to each of arrays 100 by adhesive 108.

Signal electronics 206 can be located within and/or outside of housing 202 as illustrated. Conductors (not shown for clarity of illustration) coupling signal electronics 206 to the electrodes (i.e., electrode segments 12 and common electrodes 40)

in multi-layer arrays 100 are passed through acoustic absorbing material 204 and through each composite transducer's composite panel as described above.

The advantages of the present invention are numerous. Broadband operation is achieved owing to the combination of: (i) the inherent broadband resonance of each composite transducer's piezoelectric polymer composite panel 20, and (ii) the fact that the array's individual layers can be separately addressed/tuned to a different frequency range. The present invention also provides an improved spatial field-of-view since numerous elements may be formed by selectively applying electrodes over the array aperture to form elements having different (non-uniform) apertures. The invention teaches element apertures that can be varied in size by simply addressing electrode segments separately. High frequency responses are achieved using small sized electrode segments. The electrode segments can be combined for low frequency responses, or larger sized electrode segments could be used.

It will be understood that many additional changes in the details, materials, steps and arrangement of parts, which have been herein described and illustrated in order to explain the nature of the invention, may be made by those skilled in the art within the principle and scope of the invention as expressed in the appended claims.

Attorney Docket No. 83561

MULTI-LAYER COMPOSITE TRANSDUCER ARRAY

ABSTRACT OF THE DISCLOSURE

A multi-layer composite transducer array includes at least one pair of composite transducers with an electrical and mechanical isolation layer disposed therebetween. Each composite transducer is defined by a composite panel having a common electrode coupled to a first surface and electrode segments electrically isolated from one another and coupled to a second surface. Each pair of composite transducers is configured such that the electrode segments associated with the pair's composite transducers oppose and are aligned with one another. The isolation layer has dielectric material segments that are sized, shaped and aligned in correspondence with opposing and aligned ones of the electrode segments associated with the pair's transducers. Spaces formed in the isolation layer between the dielectric material segments are filled with a viscoelastic material.

FIG. 1

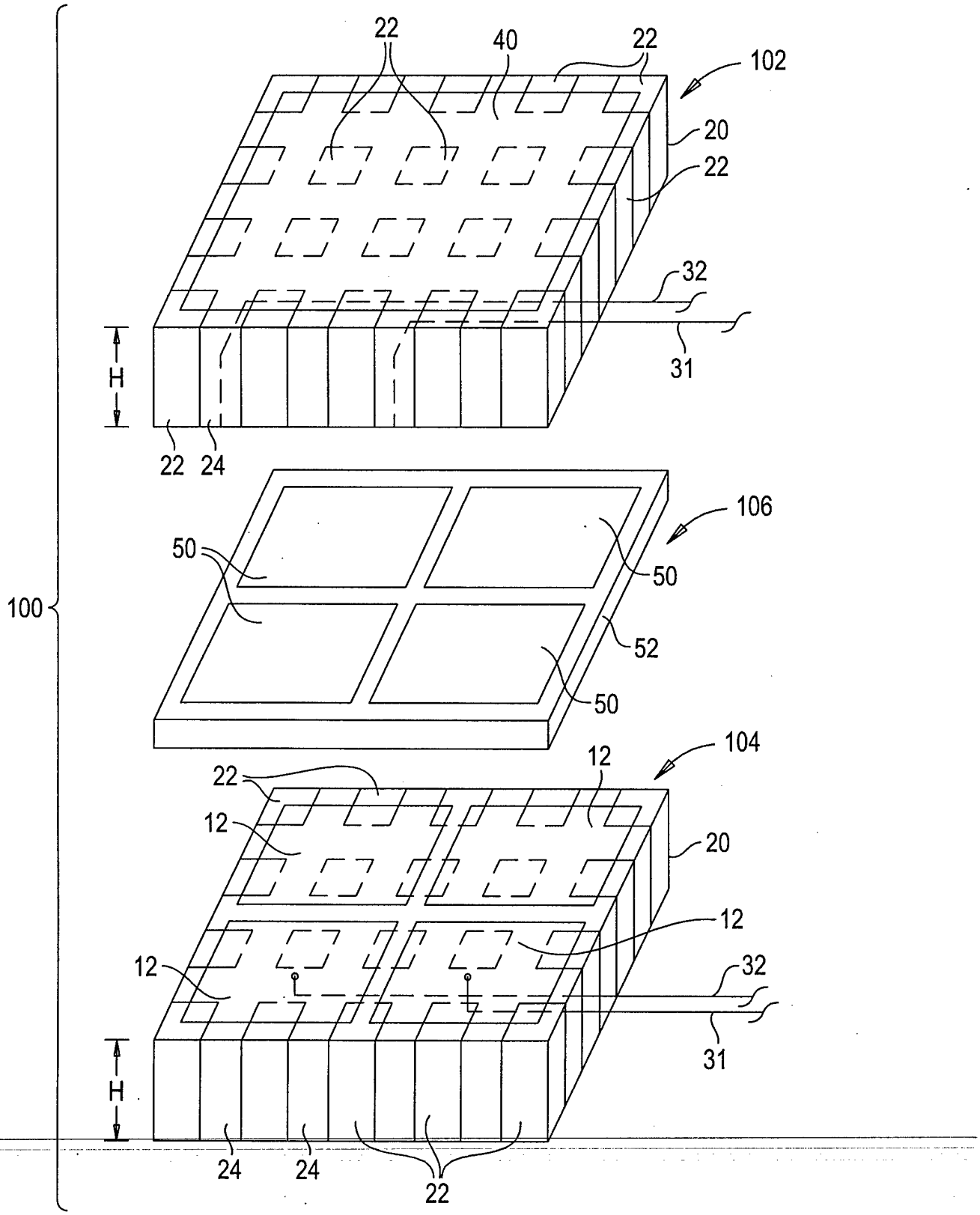
22
40
22
102
20
22
32
31
H
22
24
106
50
50
100
52
50
104
22
12
12
20
12
12
32
31
H
24
24
22

FIG. 2

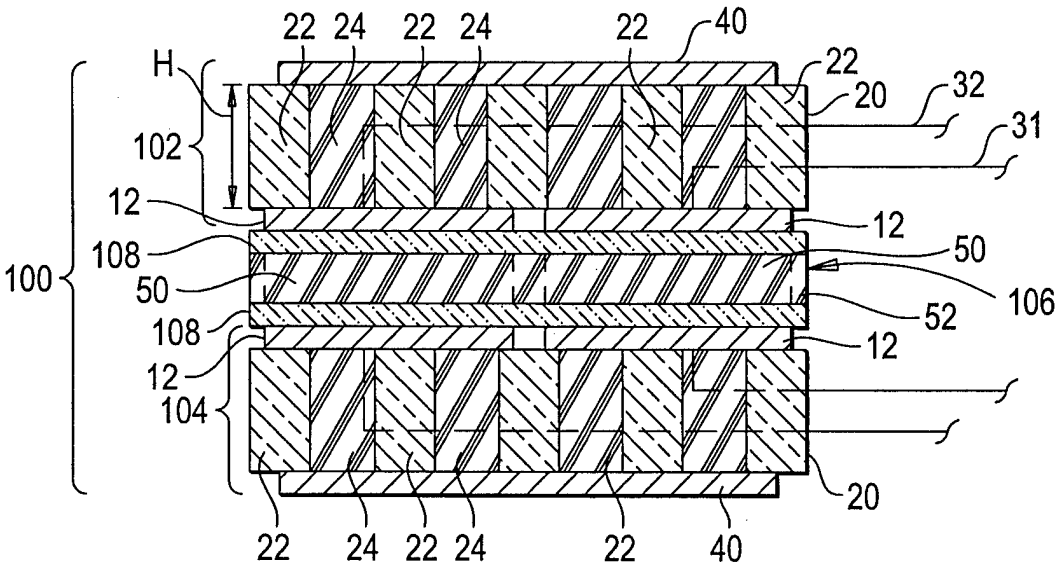
22
24
22
24
22
40
22
H
20
32
31
102
12
12
108
50
100
50
106
52
108
12
12
104
20
22
24
22
24
22
40

FIG. 3

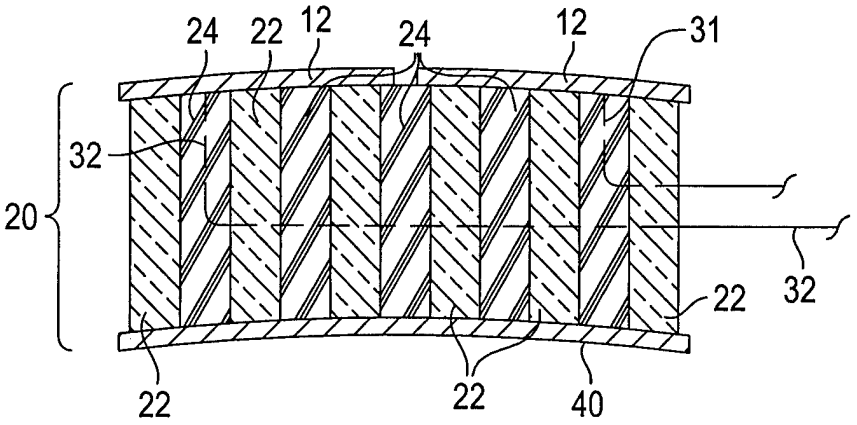
24
22
12
24
12
31
32
20
32
22
22
22
40

FIG. 4

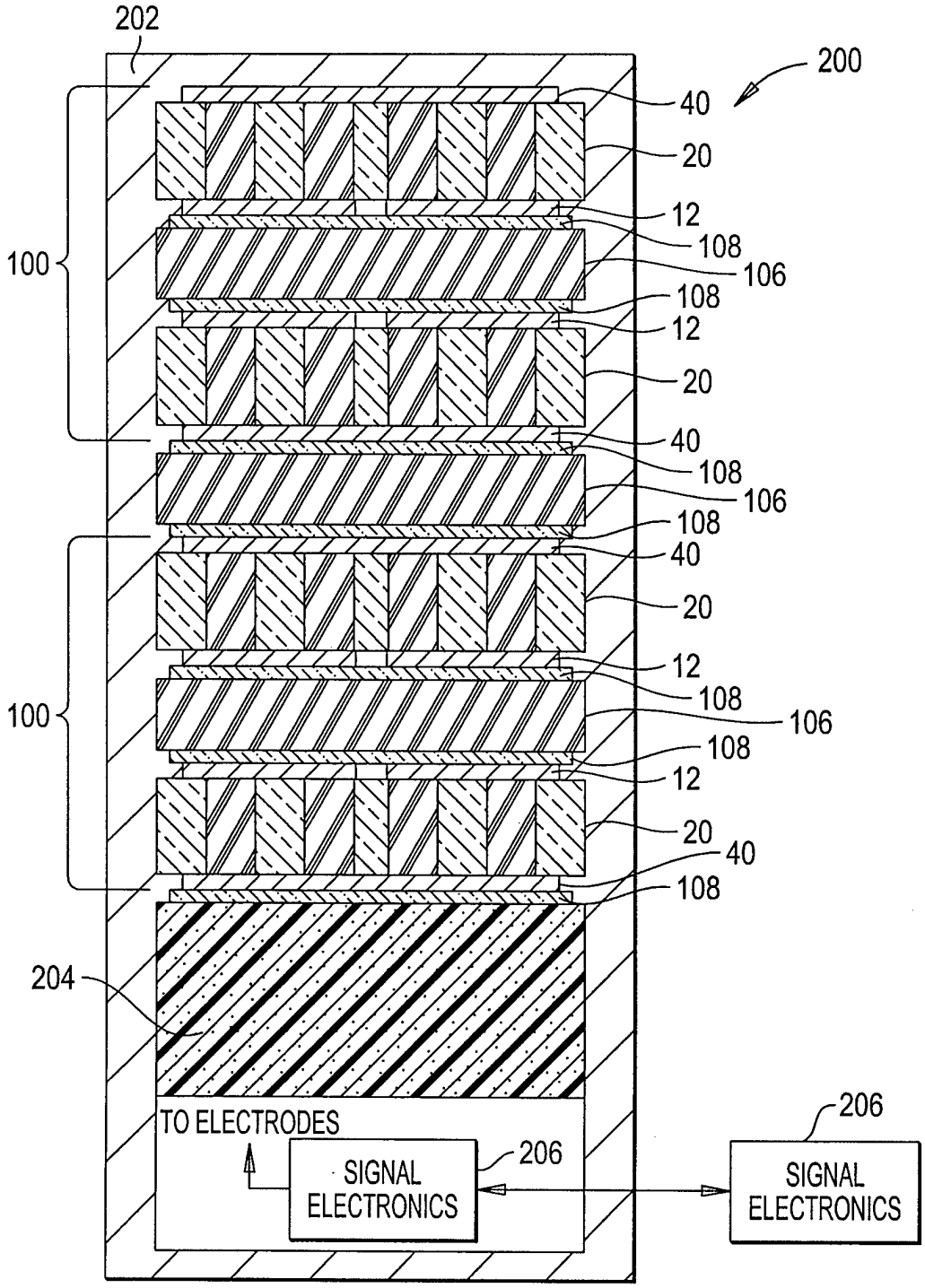
202
200
40
20
12
108
106
100
108
12
20
40
108
106
108
40
20
12
108
106
100
108
12
20
40
108
204
TO ELECTRODES
SIGNAL ELECTRONICS
206
206
SIGNAL ELECTRONICS