DEPARTMENT OF THE NAVY

OFFICE OF COUNSEL
NAVAL UNDERSEA WARFARE CENTER DIVISION
1176 HOWELL STREET
NEWPORT RI 02841-1708

IN REPLY REFER TO:

Attorney Docket No. 82999
Date: 30 March 2004

The below identified patent application is available for licensing. Requests for information should be addressed to:

PATENT COUNSEL
NAVAL UNDERSEA WARFARE CENTER
1176 HOWELL ST.
CODE 00OC, BLDG. 112T
NEWPORT, RI 02841

Serial Number	10/730,341
Filing Date	12/8/03
Inventor	Richard M. Ead

If you have any questions please contact James M. Kasischke, Deputy Counsel, at 401-832-4736.

DISTRIBUTION STATEMENT A
Approved for Public Release
Distribution Unlimited

Attorney Docket No. 82999
Customer No. 23523

AN APPARATUS FOR DEPLOYING AND RECOVERING A TOWED ACOUSTIC LINE ARRAY FROM AN UNMANNED UNDERSEA VEHICLE

TO ALL WHOM IT MAY CONCERN

BE IT KNOWN THAT RICHARD M. EAD and ROBERT L. PENDLETON, employees of the United States Government, citizens of the United States of America, and residents respectively of Wakefield, County of Washington, State of Rhode Island and Portsmouth, County of Newport, State of Rhode Island, have invented certain new and useful improvements entitled as set forth above of which the following is a specification:

JEAN-PAUL A. NASSER, Esq.
Reg. No. 53372
Naval Undersea Warfare Center
Division, Newport
Newport, RI 02841-1708
TEL: 401-832-4736
FAX: 401-832-1231

20040405 087

Attorney Docket No. 82999

AN APPARATUS FOR DEPLOYING AND RECOVERING A TOWED ACOUSTIC LINE ARRAY FROM AN UNMANNED UNDERSEA VEHICLE

STATEMENT OF GOVERNMENT INTEREST

The invention described herein may be manufactured and used by or for the Government of the United States of America for governmental purposes without the payment of any royalties thereon or therefor.

CROSS REFERENCE TO OTHER RELATED APPLICATIONS

Not applicable.

BACKGROUND OF THE INVENTION

(1) Field of the Invention

The present invention relates in general to towed array devices, and more specifically to an apparatus that deploys and recovers a towed acoustic sensor line array from an unmanned undersea vehicle.

(2) Description of the Prior Art

Towed acoustic sensor line arrays are used in military and civilian applications to detect acoustic signals in the water. For instance undersea vehicles use such arrays to establish or supplement

their sonar capabilities. Traditional towed acoustic sensor arrays take the form of linear arrays of hydrophones mounted inside a flexible hose, the array being connected to a towing vessel by a tow cable.

Unmanned undersea vehicles, (UUVs) are subject to certain constraints in their use of towed arrays particularly where the towed array is of significant length (ranging from 100 to 300 feet). Where a UUV is launched from or recovered by a larger undersea vehicle such as a submarine, the array cannot be already deployed without the risk of tangling or damaging the cable or creating additional drag on the UUV. Under these circumstances, what is needed is an apparatus for deploying a towed array from a UUV after the UUV is launched and then recovering the towed array before the UUV itself is recovered.

SUMMARY OF THE INVENTION

It is a general purpose and object of the present invention to provide apparatus that allows a UUV to deploy and recover a towed array of significant length.

It is a further object to allow the UUV to deploy the array while the UUV is stationary or moving at a low speed.

These objects are accomplished with the present invention by having a free flooded section of the UUV that contains a cylindrical rotating drum for spooling the line array tow cable. The rotating drum can either spool out or reel in the cable. At the end of the

cable is a reverse thruster that has the ability to propel itself away from the UUV pulling the cable out as it does so in order to deploy the cable. To recover the cable the drum rotates and the cable is reeled in, passing through a series of winding guides to insure that the cable does not entangle and is wrapped evenly on the drum.

BRIEF DESCRIPTION OF THE DRAWINGS

A more complete understanding of the invention and many of the attendant advantages thereto will be readily appreciated as the same becomes better understood by reference to the following detailed description when considered in conjunction with the accompanying drawings wherein:

FIG. 1 shows the present invention with the array in the recovered position;

FIG. 2 shows the present invention with the array in the deployed position;

FIG. 3 shows a cut away view of the present invention from the port side of the UUV;

FIG. 4 shows a view of the drum assembly from the back end of the UUV;

FIG. 5 shows a cut away view of the reverse thruster;

FIG. 6 shows an aft view of the reverse thruster featuring the water inlet port; and

FIG. 7 shows a forward view of the reverse thruster featuring the water exit ports and tow cable connection.

DESCRIPTION OF THE PREFERRED EMBODIMENT

Referring now to FIG. 1, there is shown a UUV 10. Located in the aft section of the UUV 10 is a towed line array 12, which is essentially a flexible cable. The towed array 12 is in the recovered position completely retracted within the UUV 10. Referring now to FIG. 2 there is shown the UUV 10 with the towed array 12 in the deployed position.

Referring now to FIG. 3, there is shown a view from the port side of the UUV 10 with a cut away section revealing the towed array deployment and retrieval apparatus. In a preferred embodiment, the apparatus resides in a free flooded section 14 of the UUV 10, between the UUV propulsion compartment 16 and the UUV internal power and data processing systems compartment 18. A cylindrical drum 20 is used as a spool upon which to wind and unwind the array 12. Mounted to drum 20 is electronics assembly 22 and commutator assembly 24. Electronics assembly 22 is primarily used for converting data that is generated by the various acoustic hydrophones in the array 12 into a serial format for passing the data across the commutator assembly 24. The commutator assembly 24 is used for transferring power and data between the array 12 and the UUV internal power and data

processing systems 18. The array 12 passes from the drum 20 through a mechanical or electrical winding guide 26. Winding guide 26 moves with a sideways motion that is synchronized with the rotation of drum 20 such that array 12 is retrieved and wound on the drum 20 in consecutive smooth layers. Winding guide 26 has a tension sensor 27 (See FIG. 4) that automatically adjusts power to a drive motor 34 (shown by hidden lines) that turns drum 20 to maintain a constant tension during deployment. There are two stationary winding guides 28 and 30. They are essentially rollers through which array 12 passes through. Stationary winding guide 28 is located within the free flooded section 14. Stationary winding guide 30 is located at the end of deployment guide 31. Deployment guide 31 protrudes from the exterior of the UUV 10 and serves as a barrier to prevent the cable from tangling with the UUV 10.

At the very end of the array 12 is a reverse thruster 32. The function of reverse thruster 32 is to help deploy the line array 12 during missions requiring the UUV 10 to "hover" or when the UUV 10 is traveling at low speeds. At higher speeds, the thruster 32 is not operative and serves as a drogue to assist in array 12 deployment. The thruster 32 is not operative during recovery of the array 12.

The drive motor 34 shown by hidden lines in FIG. 3 can be an electric motor powered by the UUV internal power source.

FIG. 4 shows a forward view of the entire drum assembly as seen from the back end of the UUV 10. On one end of the drum 20 is the electronics assembly 22 and commutator assembly 24 and on the other end is the drive motor 34. Winding guide 26 is beneath drum 20 and traverses back and forth along the length of drum 20. Joined to winding guide 26 is tension sensor 27.

Referring now to FIG. 5, there is shown a side view with a cut away section of the reverse thruster 32. A depth sensor 36 that sends a signal to the UUV 10 via towed array 12 can be provided within thruster 32. There is a counterweight 38 to help correct for any roll that the reverse thruster 32 may experience. There is a buoyancy air chamber 40 to help the thruster 32 to remain buoyant. The thruster should be as neutrally buoyant as possible. The combination of the buoyant air chamber 40 and counterweight 38 helps to prevent twisting of the array 12. The reverse thruster is able to generate thrust though a spinning paddle wheel 42 which is spun by an electric motor 44. The paddle wheel 42 creates water flow with a resultant force in the opposite direction of the water flow. FIGS. 6 and 7 show aft and forward views respectively of the thruster 32. The water inlet port 46 allows water to flow into the thruster 32. Once the water has flowed inside the thruster 32, the spinning paddle wheel 42 forces the water out of the thruster 32 through one of the multiple water exit ports 48.

The tow cable connection 50 is also illustrated in the forward view of the thruster 32 in FIG. 7.

The advantages of the present invention over the prior art are that through the use of the array deployment and recovery apparatus, an unmanned undersea vehicle equipped with a towed array of significant length (ranging from 100 to 300 feet) can now be launched from inside of or outside of another larger undersea vehicle through a variety of methods. There will also be minimal drag on the unmanned undersea vehicle with the array in its non-deployed (recovered) position as the UUV "swims out" to its area of operation.

What has thus been described is an apparatus for deploying and recovering a towed acoustic line array from an unmanned undersea vehicle.

Obviously many modifications and variations of the present invention may become apparent in light of the above teachings. For example, the array deployment guide can be located in several other locations instead of the aft section of the UUV. In an alternative embodiment the present invention might include additional thruster capability for three dimensional control for accurately positioning the end of the array. Three dimensional control could be achieved through the use of three internal paddle wheels in the thruster positioned at ninety degree angles from each other. Also, at moderate to high UUV operating speeds

the need for a thruster to assist deployment may not be required and it can be substituted with a simple drogue device.

In light of the above, it is therefore understood that within the scope of the appended claims, the invention may be practiced otherwise than as specifically described.

Attorney Docket No. 82999

AN APPARATUS FOR DEPLOYING AND RECOVERING A TOWED ACOUSTIC LINE ARRAY FROM AN UNMANNED UNDERSEA VEHICLE

ABSTRACT OF THE DISCLOSURE

A free flooded section of an unmanned undersea vehicle (UUV) contains a rotating cylindrical drum, which serves as a spool for a towed line array cable. At the end of the cable is a reverse thruster with the ability to propel itself away from the UUV when the UUV is submerged. The thruster moves away from the UUV, pulling the cable and unspooling it as it does so in order to deploy the array. To recover the array, the cylindrical drum rotates to reel in the cable. The cable is guided through a series of winding guides that allow the cable to be wound evenly on the drum.

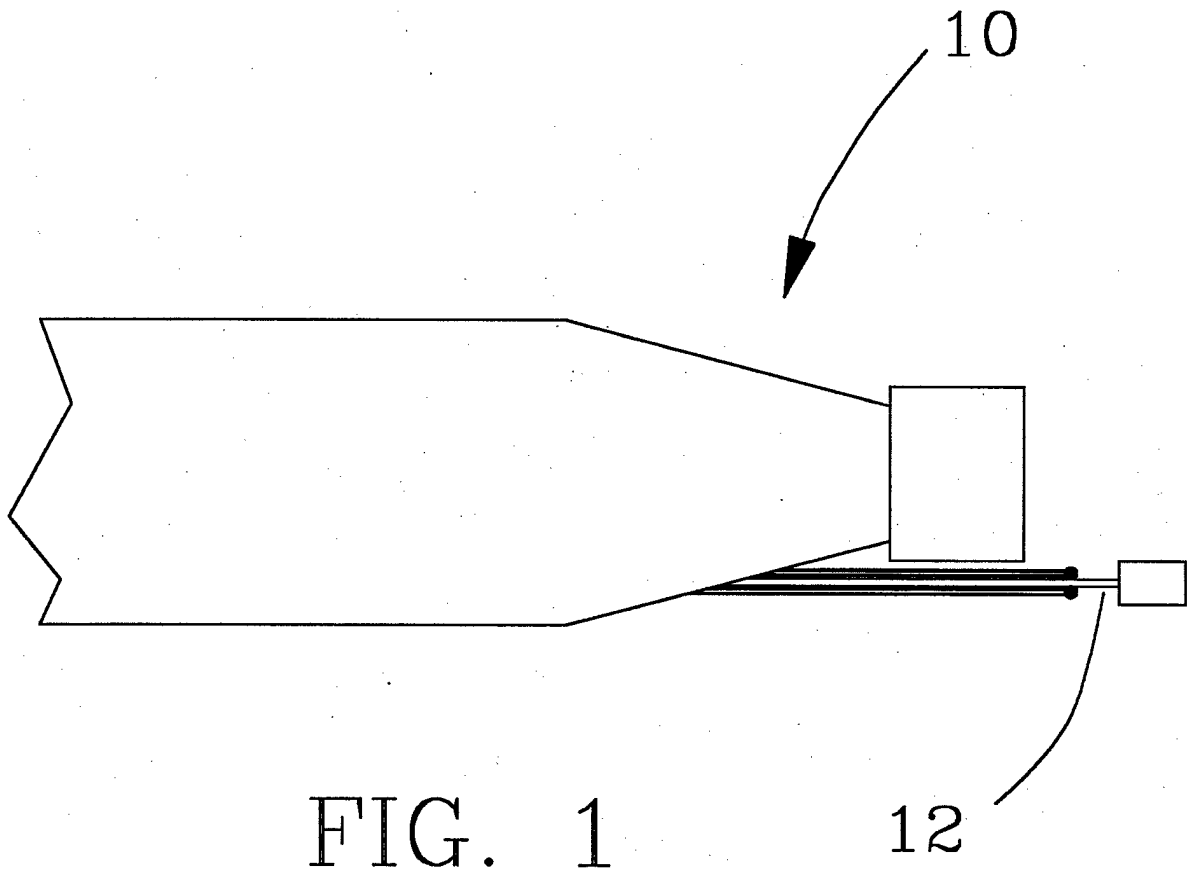

FIG. 1

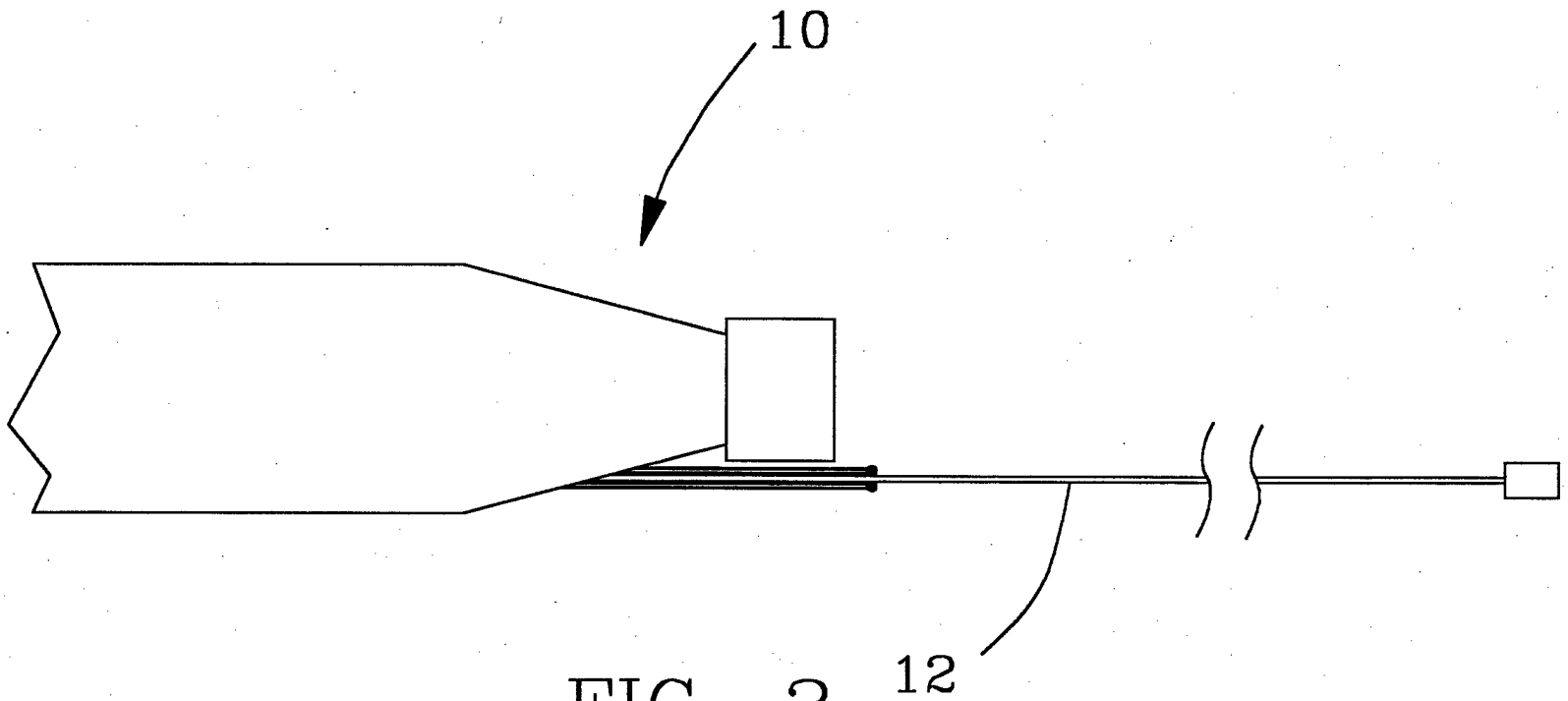

FIG. 2

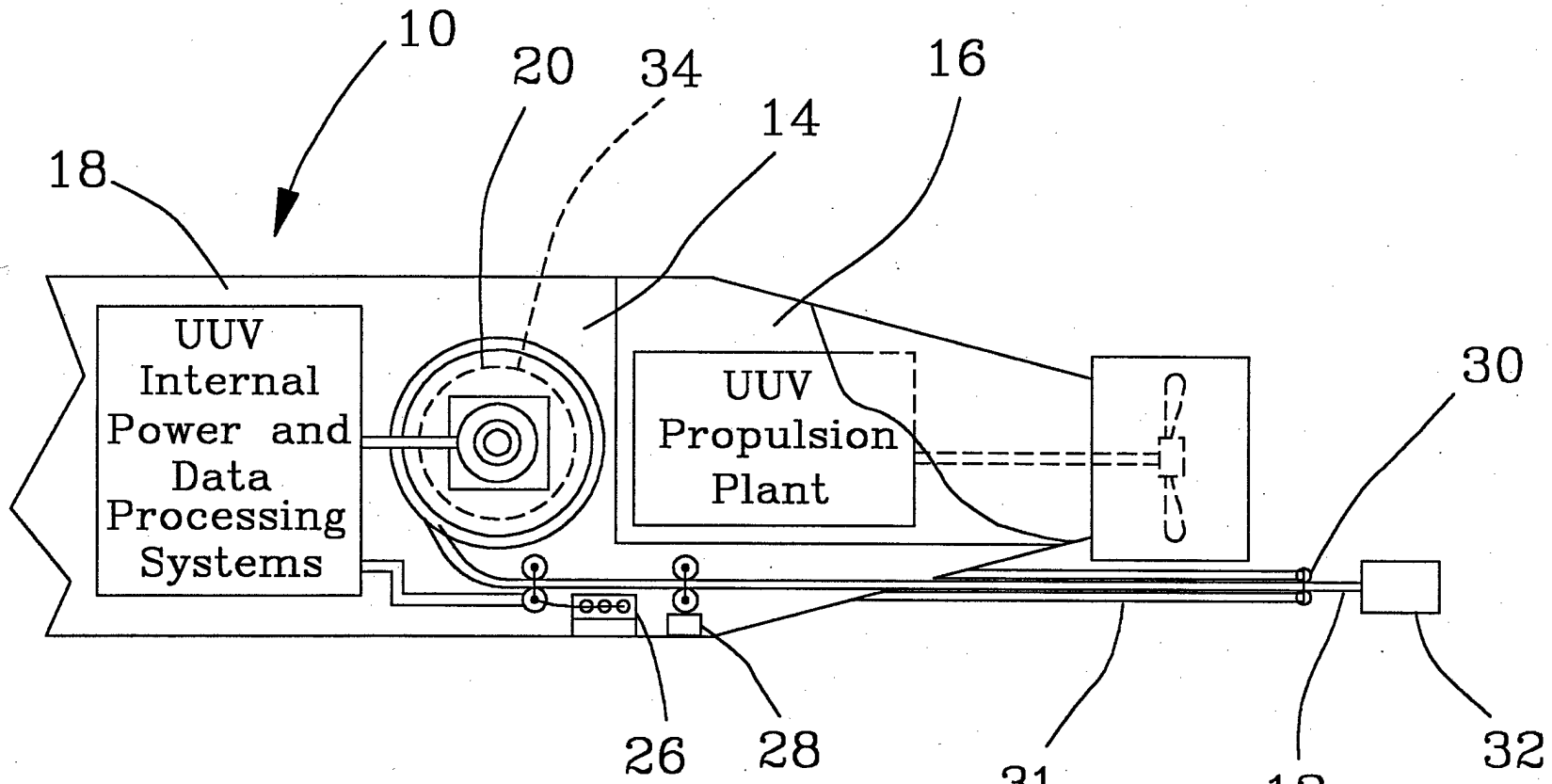
10
20
34
14
16
18
UUV Internal Power and Data Processing Systems
UUV Propulsion Plant
30
26
28
31
12
32

FIG. 3

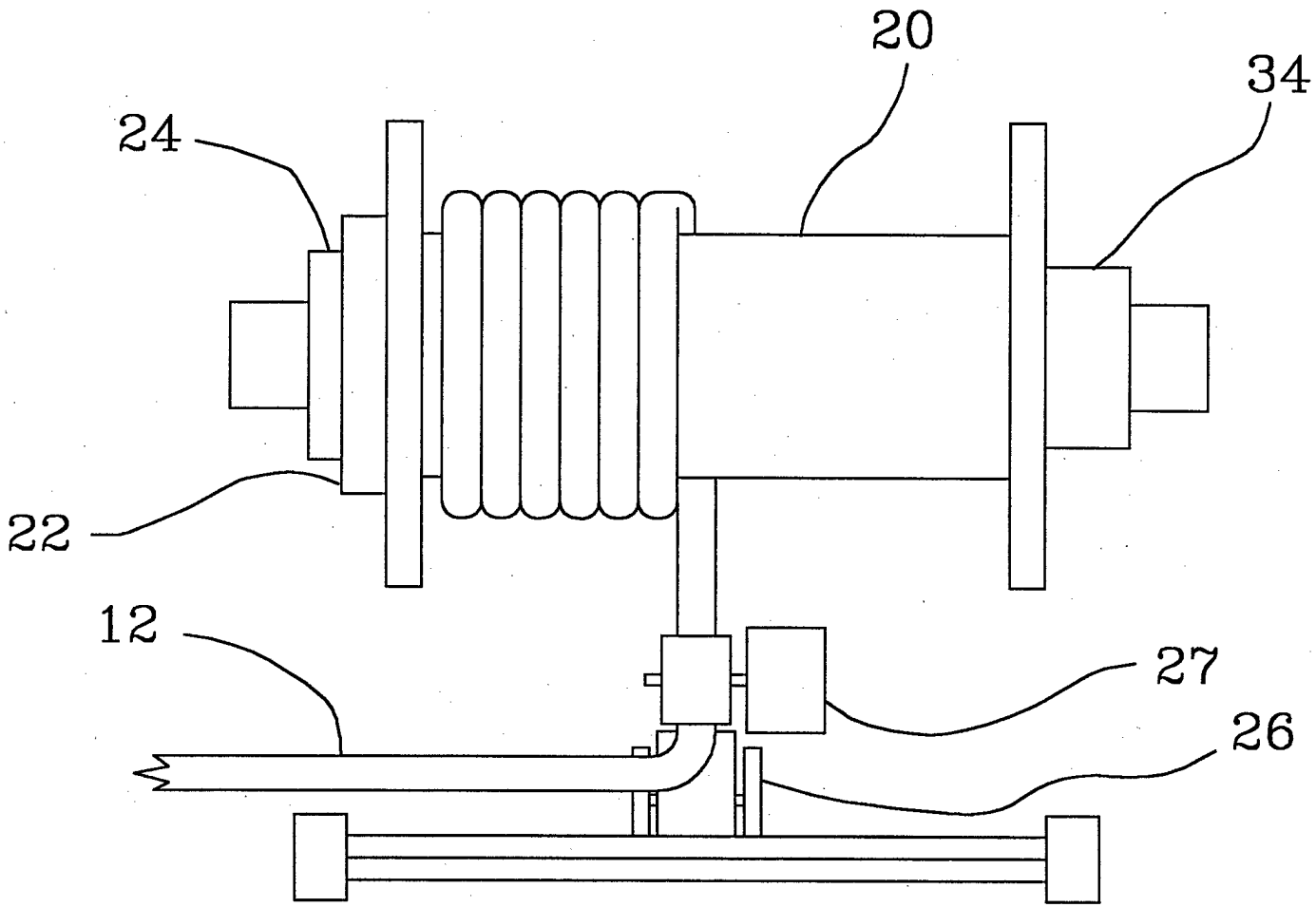

FIG. 4

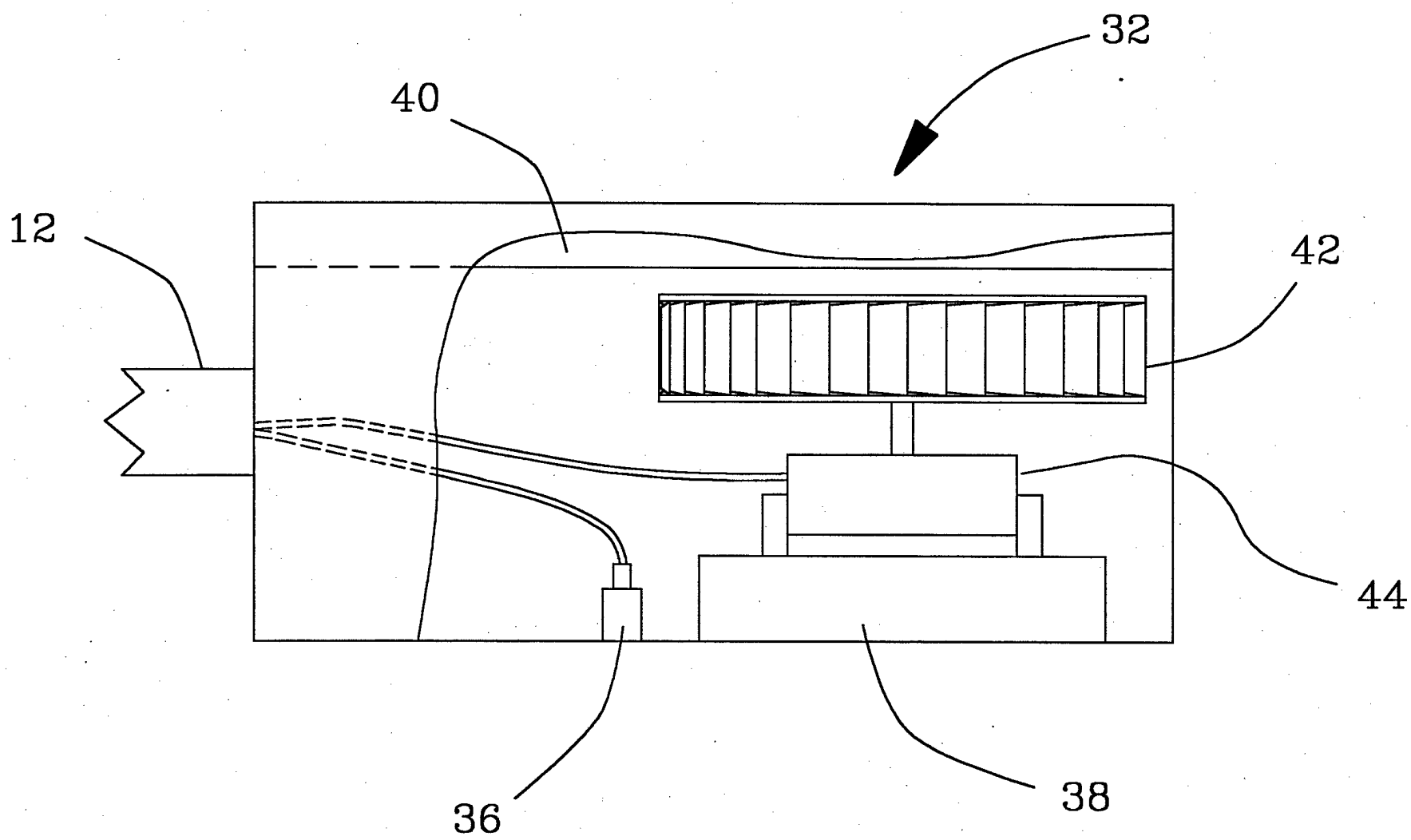

FIG. 5

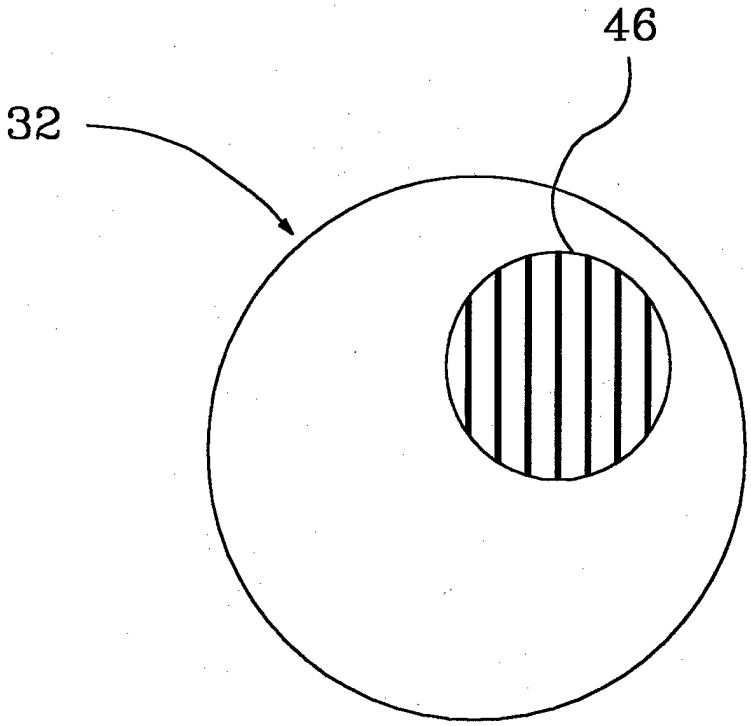

FIG. 6

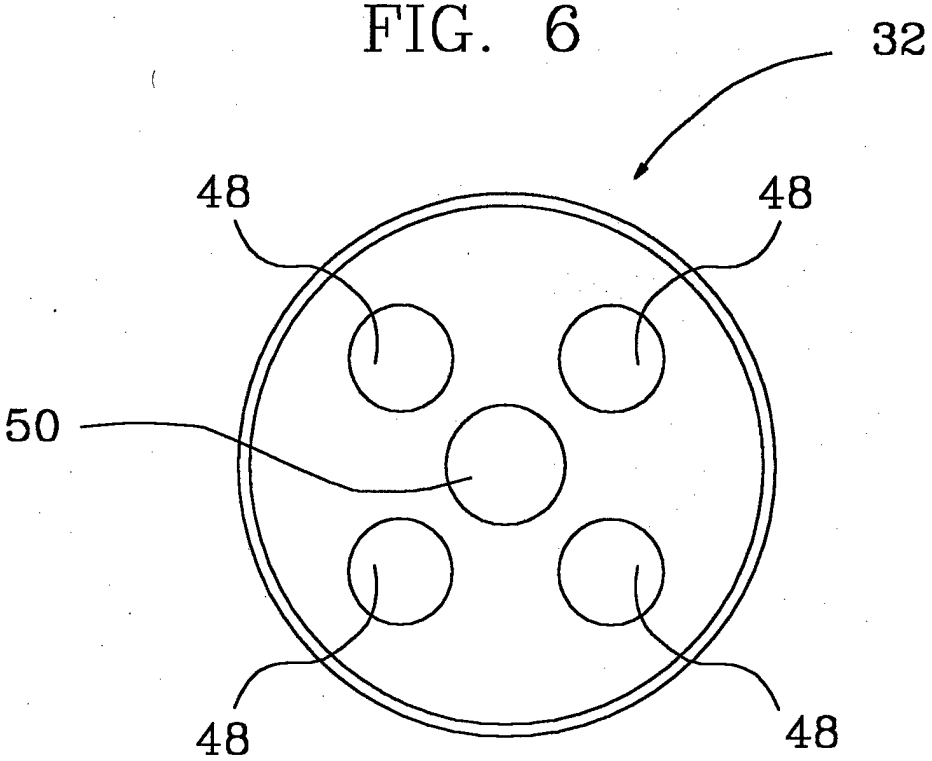

FIG. 7