REPORT DOCUMENTATION PAGE

Form Approved
OMB No. 0704-0188

Public reporting burden for this collection of information is estimated to average 1 hour per response, including the time for reviewing instructions, searching existing data sources, gathering and maintaining the data needed, and completing and reviewing this collection of information. Send comments regarding this burden estimate or any other aspect of this collection of information, including suggestions for reducing this burden, to Department of Defense, Washington Headquarters Services, Directorate for Information Operations and Reports (0704-0188), 1215 Jefferson Davis Highway, Suite 1204, Arlington, VA 22202-4302. Respondents should be aware that notwithstanding any other provision of law, no person shall be subject to any penalty for failing to comply with a collection of information if it does not display a currently valid OMB control number. **PLEASE DO NOT RETURN YOUR FORM TO THE ABOVE ADDRESS.**

1. REPORT DATE June 6, 2000	2. REPORT TYPE Patent	3. DATES COVERED
4. TITLE AND SUBTITLE **Switch Particularly Suited for Image Intensifier Tube system**		5a. CONTRACT NUMBER 5b. GRANT NUMBER 5c. PROGRAM ELEMENT NUMBER
6. AUTHOR(S) Franklin H. Fish		5d. PROJECT NUMBER 5e. TASK NUMBER 5f. WORK UNIT NUMBER
7. PERFORMING ORGANIZATION NAME(S) AND ADDRESS(ES) Naval Air Warfare Center Aircraft Division 22347 Cedar Point Road, Unit #6 Patuxent River, Maryland 20670-1161		8. PERFORMING ORGANIZATION REPORT NUMBER **6,072,170**
9. SPONSORING/MONITORING AGENCY NAME(S) AND ADDRESS(ES) Naval Air Systems Command 47123 Buse Road Unit IPT Patuxent River, Maryland 20670-1547		10. SPONSOR/MONITOR'S ACRONYM(S) 11. SPONSOR/MONITOR'S REPORT NUMBER(S)

12. DISTRIBUTION/AVAILABILITY STATEMENT

Approved for public release; distribution is unlimited

13. SUPPLEMENTARY NOTES

14. ABSTRACT

A cathode switch particularly suited for an image intensifier tube (IIT) is disclosed. The cathode switch provides cathode pulses to turn "on" and turn "off" the IIT tube and does so with reduced power consumption and with reduced noise generated by associated high voltage switching.

15. SUBJECT TERMS
cathode switch, image intensifier tube

16. SECURITY CLASSIFICATION OF: unclassified			17. LIMITATION OF ABSTRACT	18. NUMBER OF PAGES	19a. NAME OF RESPONSIBLE PERSON
a. REPORT	b. ABSTRACT	c. THIS PAGE	UL	18	Karen L. Jensen
Unclassified	Unclassified	Unclassified			19b. TELEPHONE NUMBER (include area code) (301) 757-3255

Standard Form 298 (Rev. 8-98)
Prescribed by ANSI Std. Z39-18

20010629 093

NC 77444

US006072170A

United States Patent [19]

Fish

[11] **Patent Number: 6,072,170**

[45] **Date of Patent: Jun. 6, 2000**

[54] **SWITCH PARTICULARLY SUITED FOR IMAGE INTENSIFIER TUBE SYSTEM**

[75] Inventor: **Franklin H. Fish**, Indianapolis, Ind.

[73] Assignee: **The United States of America as represented by the Secretary of the Navy**, Washington, D.C.

[21] Appl. No.: **09/183,967**

[22] Filed: **Nov. 2, 1998**

[51] **Int. Cl.**[7] **H01J 31/50**

[52] **U.S. Cl.** ..... **250/214 VT**; 250/207; 250/214 R

[58] **Field of Search** ..... 250/214 VT, 214 R, 250/207, 214 LA; 313/532, 537, 103 R, 103 CM, 104, 105 R, 105 CM

[56] **References Cited**

U.S. PATENT DOCUMENTS

4,166,213	8/1979	Hoover	250/214 VT
4,734,573	3/1988	Dill	250/214 VT
5,495,364	2/1996	Palmer	250/214 VT
5,883,381	3/1999	Saldana	250/214 VT
5,949,063	9/1999	Saldana et al.	250/214 VT

Primary Examiner—John R Lee
Attorney, Agent, or Firm—Ron Billi

[57] **ABSTRACT**

A cathode switch particularly suited for an image intensifier tube (IIT) is disclosed. The cathode switch provides cathode pulses to turn "on" and turn "off" the IIT tube and does so with reduced power consumption and with reduced noise generated by associated high voltage switching.

3 Claims, 11 Drawing Sheets

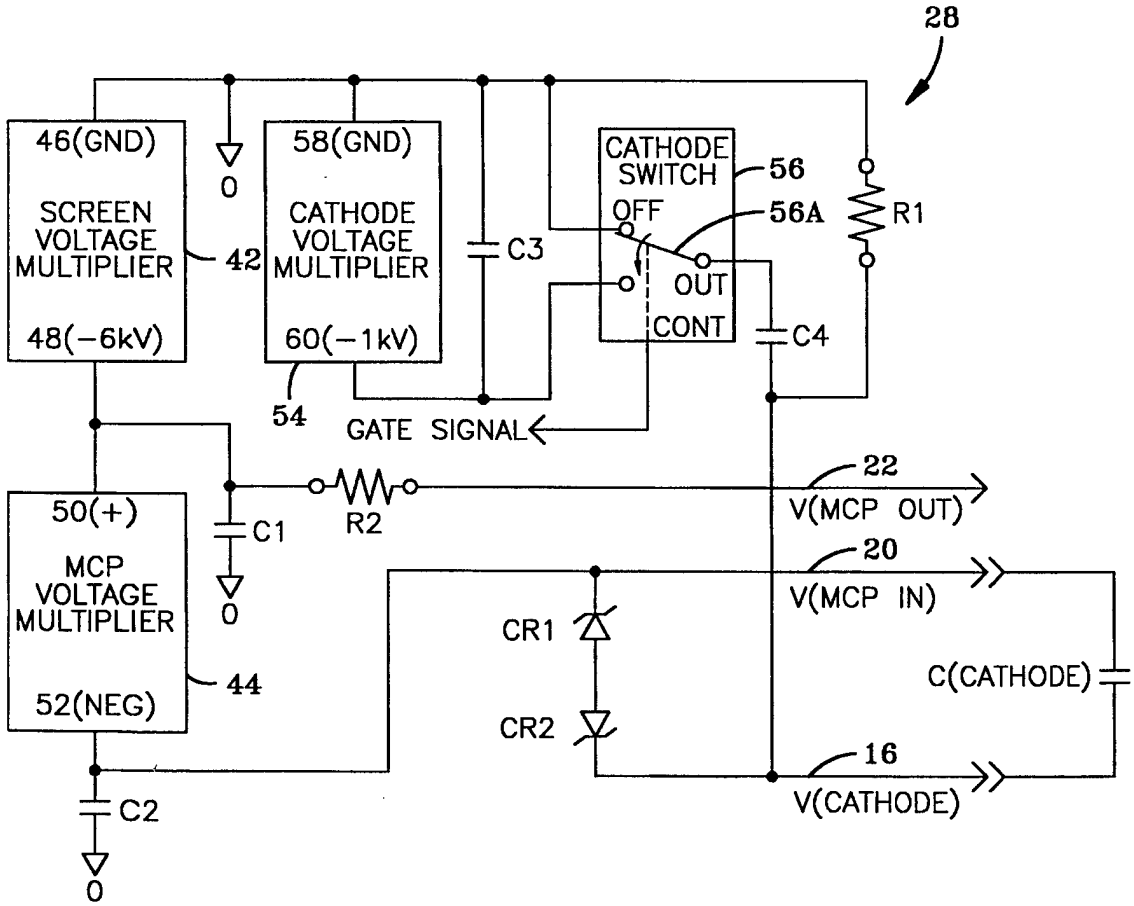

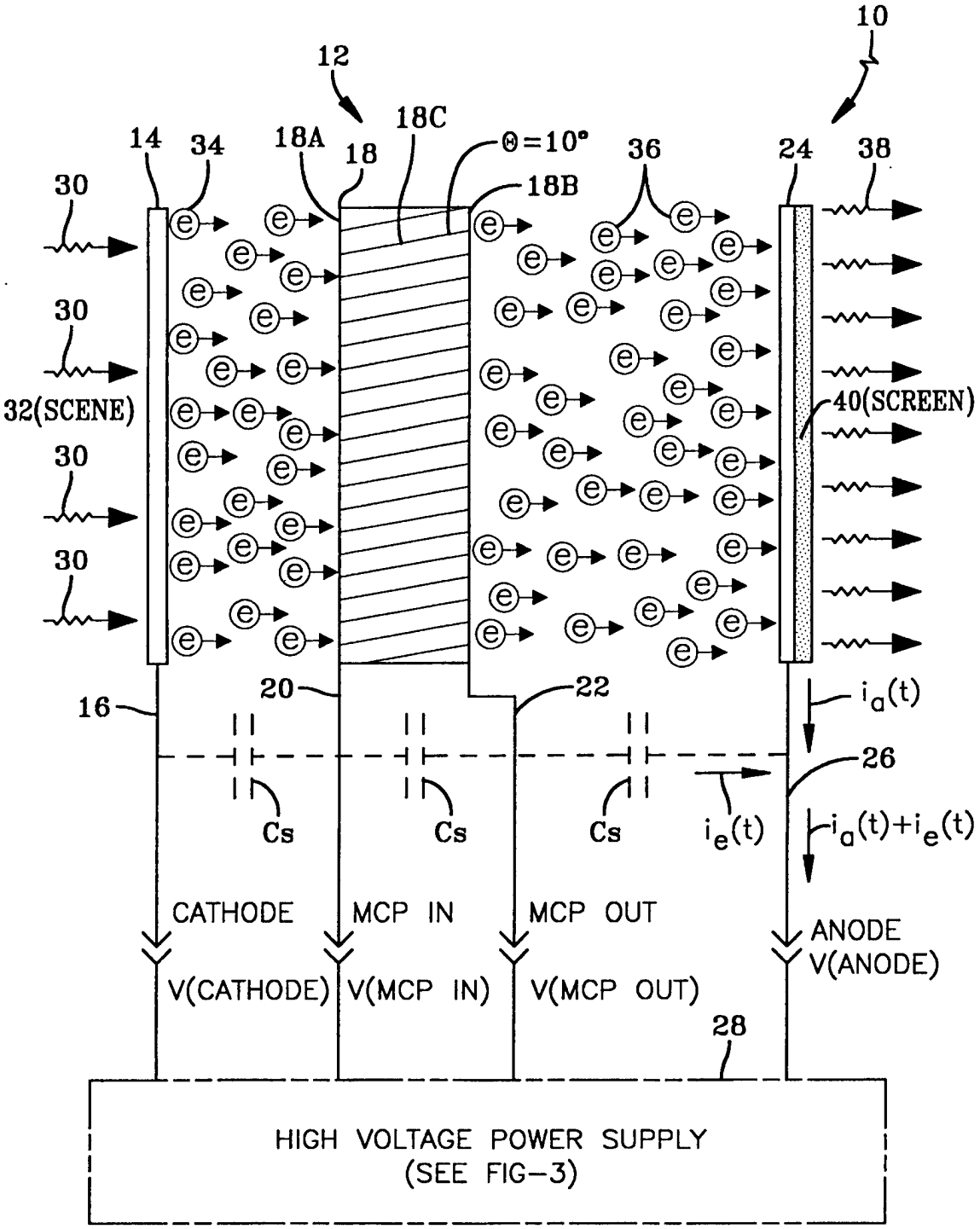
10
12
14
34
18A
18
18C
Θ=10°
36
24
38
30
18B
30
32(SCENE)
40(SCREEN)
30
30
16
20
22
$i_a(t)$
26
Cs
Cs
Cs
$i_e(t)$
$i_a(t)+i_e(t)$
CATHODE
MCP IN
MCP OUT
ANODE
V(CATHODE)
V(MCP IN)
V(MCP OUT)
V(ANODE)
28
HIGH VOLTAGE POWER SUPPLY
(SEE FIG-3)

FIG-1

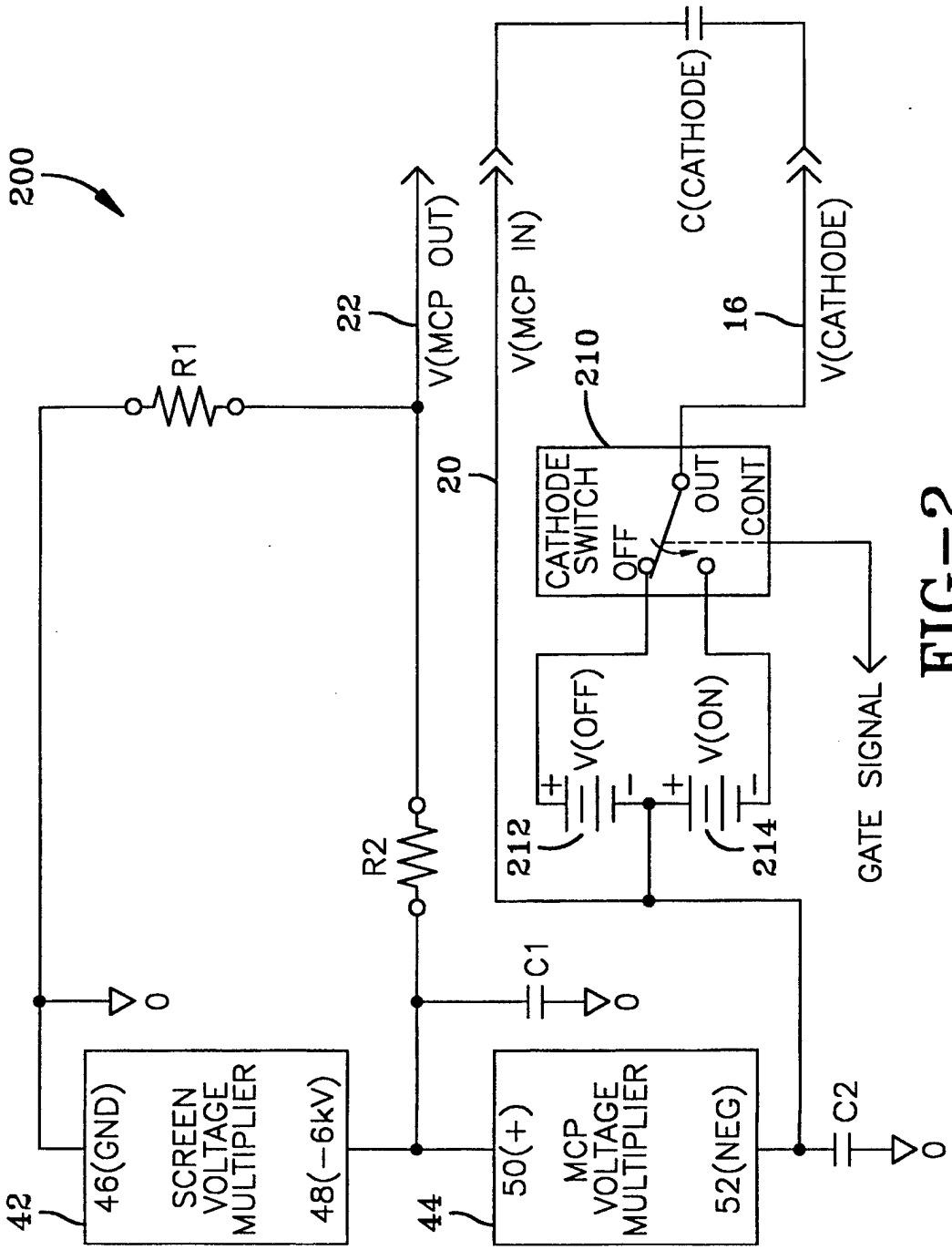

FIG-2
PRIOR ART

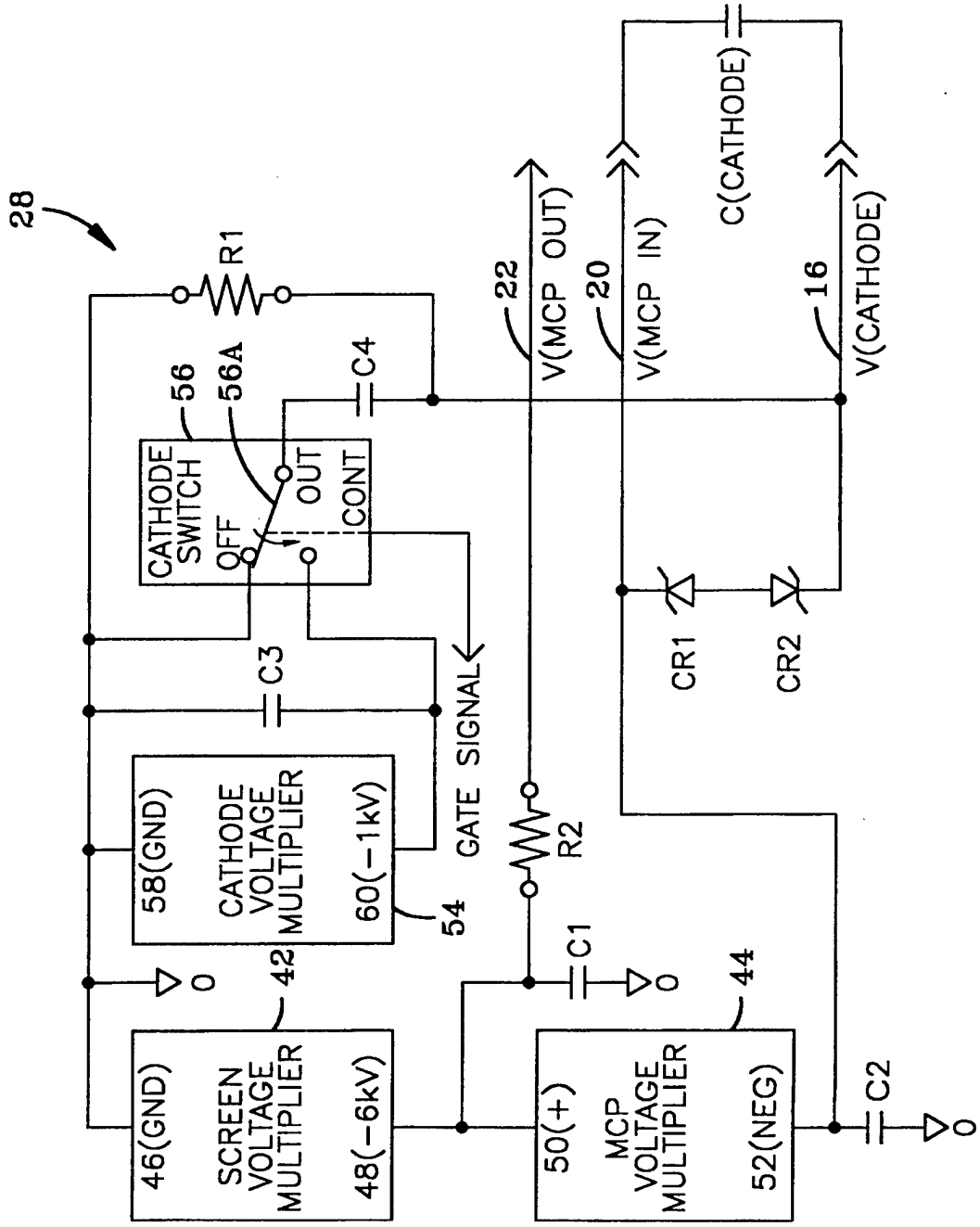
28
R1
56
56A
CATHODE SWITCH
OFF
OUT
CONT
C4
22
V(MCP OUT)
20
V(MCP IN)
C(CATHODE)
16
V(CATHODE)
C3
GATE SIGNAL
58(GND)
CATHODE VOLTAGE MULTIPLIER
60(−1kV)
54
R2
CR1
CR2
42
46(GND)
SCREEN VOLTAGE MULTIPLIER
48(−6kV)
C1
44
50(+)
MCP VOLTAGE MULTIPLIER
52(NEG)
C2

FIG−3

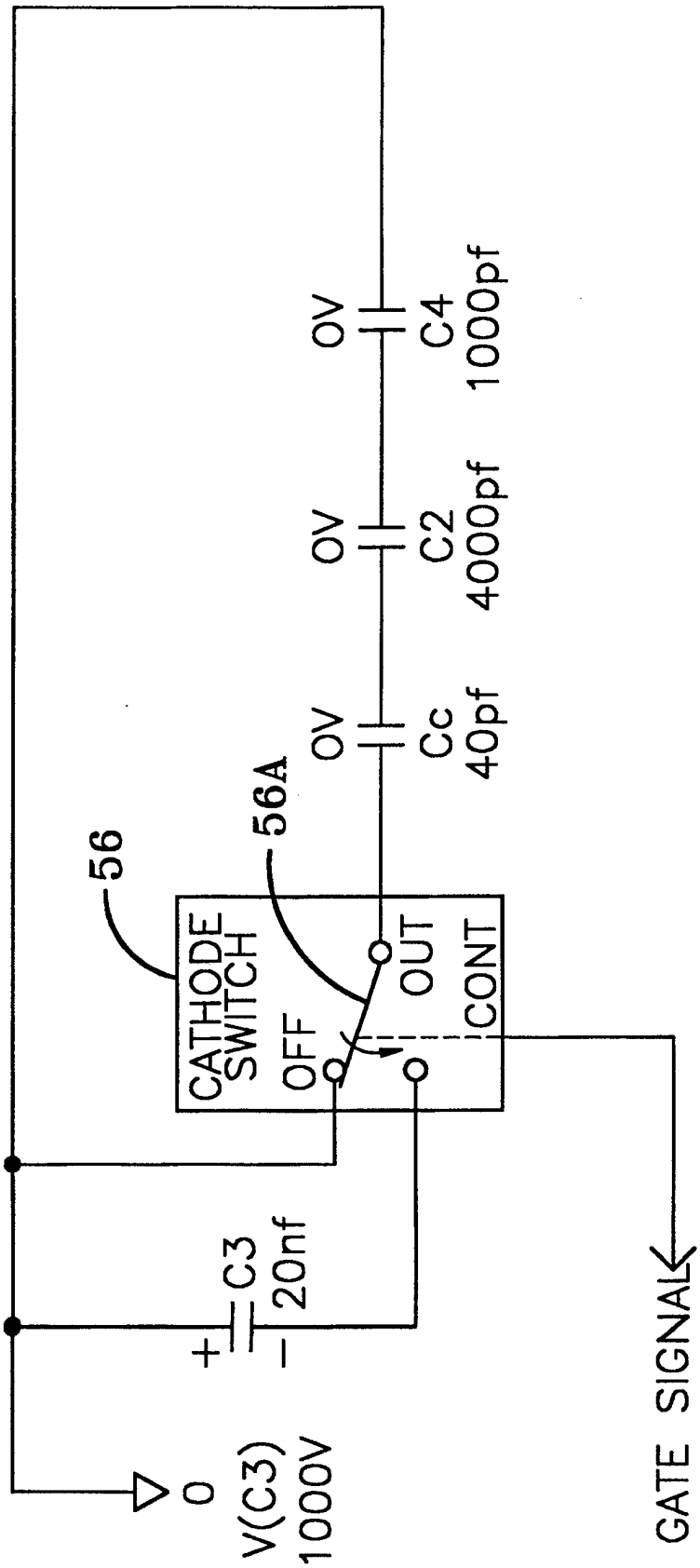
56
CATHODE SWITCH
OFF
OUT
CONT
56A
OV
Cc
40pf
OV
C2
4000pf
OV
C4
1000pf
C3
20nf
+
−
0
V(C3)
1000V
GATE SIGNAL

FIG-4

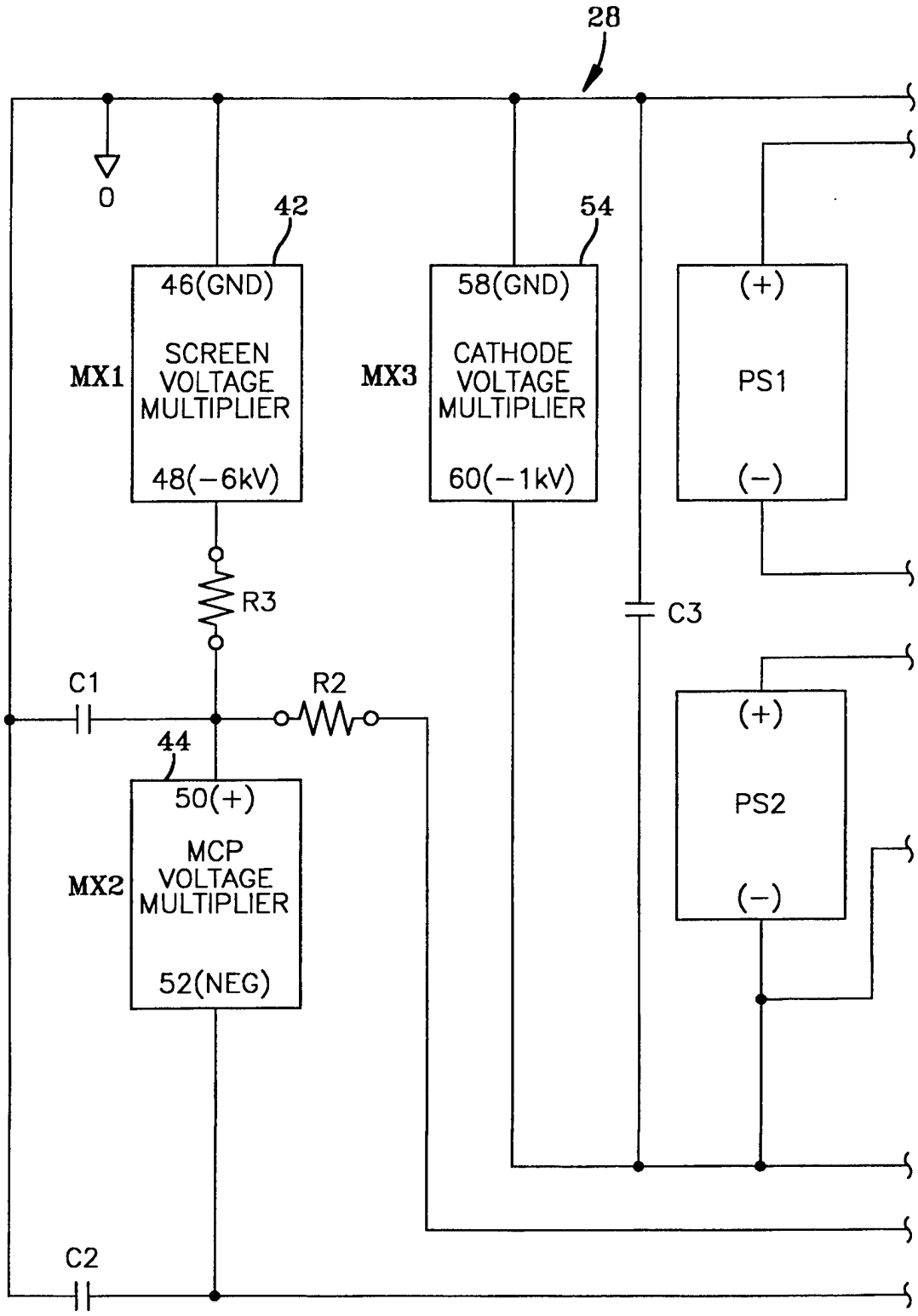
28
0
42
46(GND)
SCREEN
VOLTAGE
MULTIPLIER
48(−6kV)
MX1
54
58(GND)
CATHODE
VOLTAGE
MULTIPLIER
60(−1kV)
MX3
(+)
PS1
(−)
R3
C3
C1
R2
44
50(+)
MCP
VOLTAGE
MULTIPLIER
52(NEG)
MX2
(+)
PS2
(−)
C2

FIG−5A

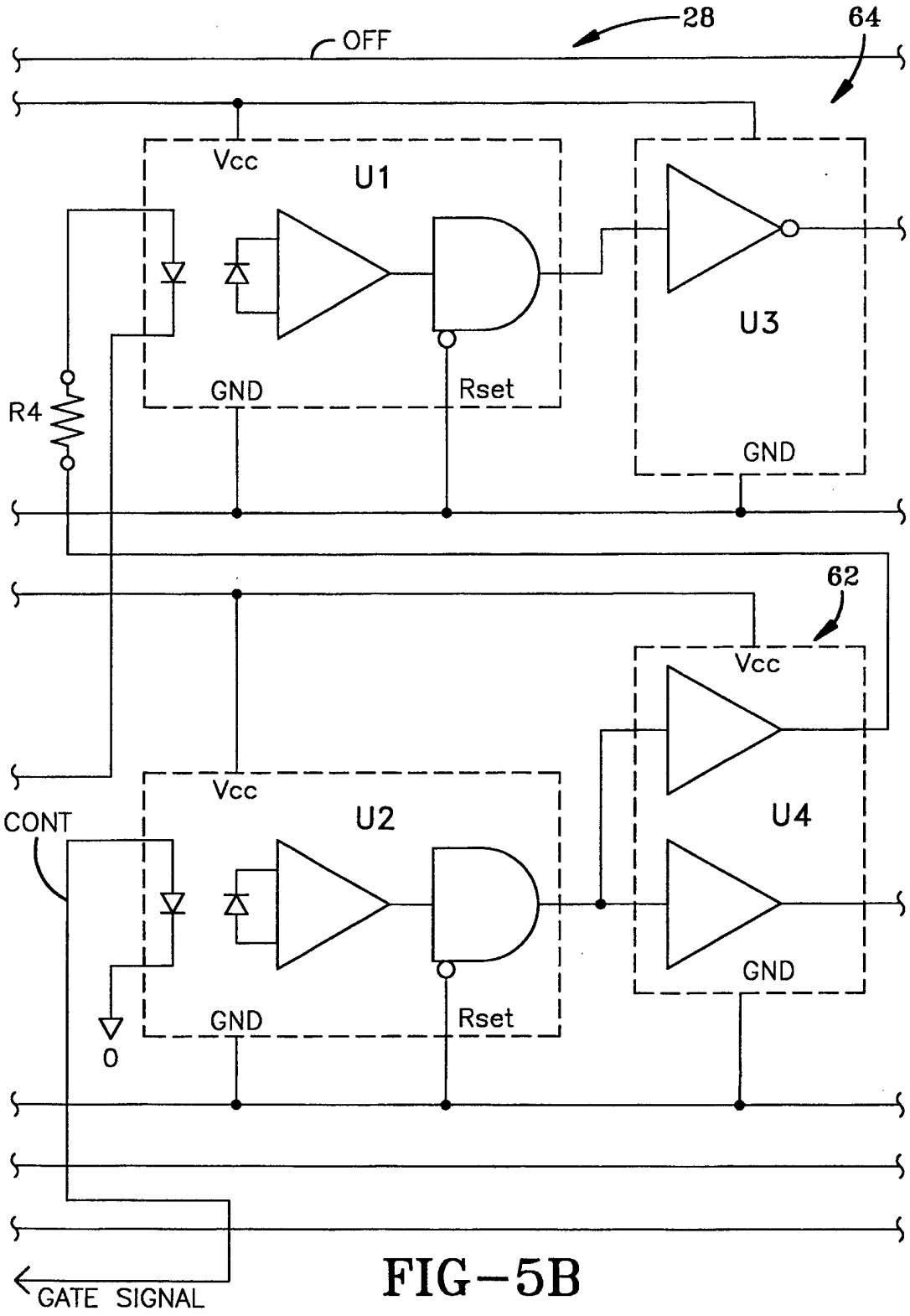
28
64
OFF
Vcc
U1
U3
GND
Rset
R4
GND
62
Vcc
Vcc
U2
U4
CONT
GND
GND
Rset
0
GATE SIGNAL

FIG-5B

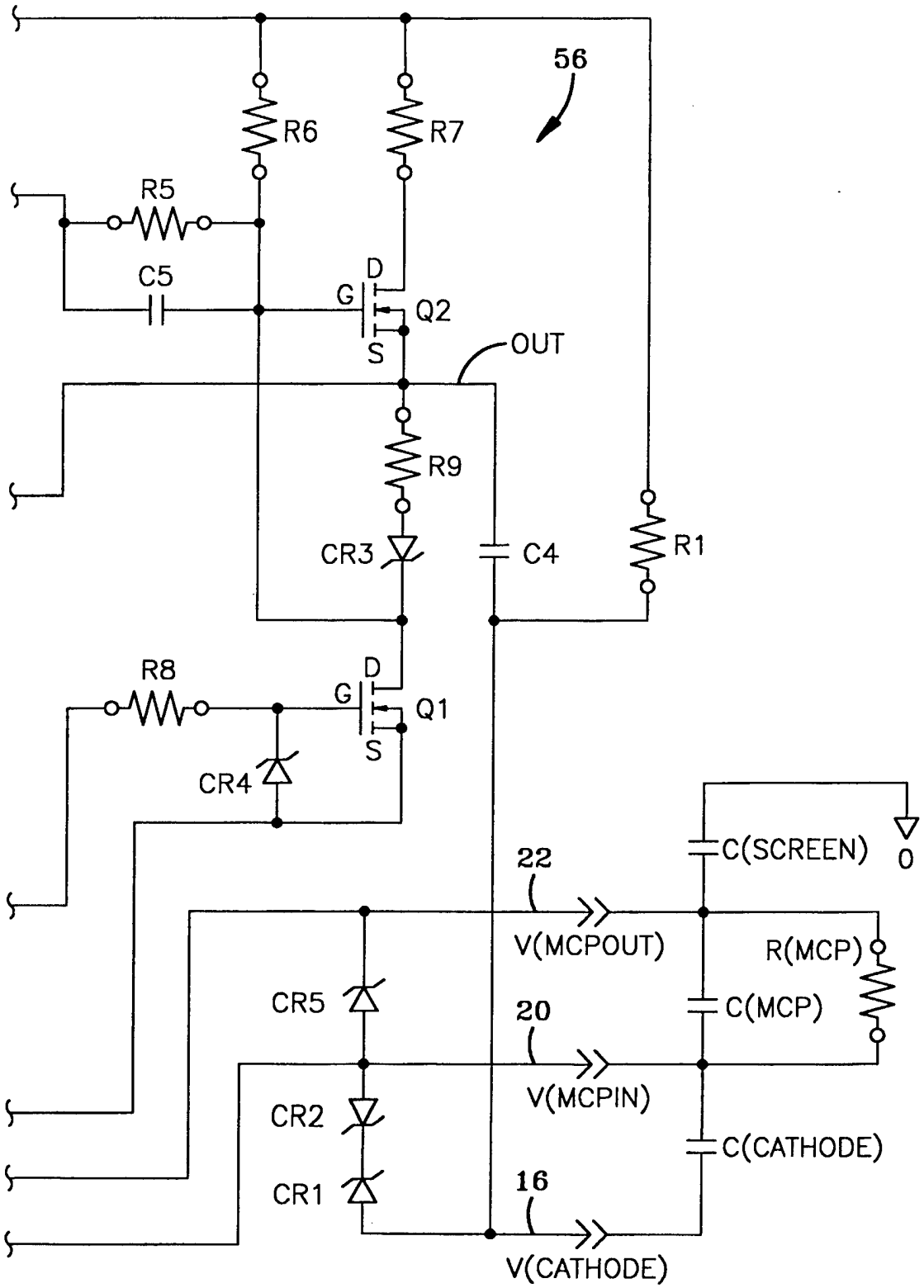
56
R6
R7
R5
C5
D
G
Q2
S
OUT
R9
CR3
C4
R1
R8
D
G
Q1
S
CR4
C(SCREEN)
0
22
V(MCPOUT)
R(MCP)
CR5
20
C(MCP)
V(MCPIN)
CR2
C(CATHODE)
CR1
16
V(CATHODE)

FIG-5C

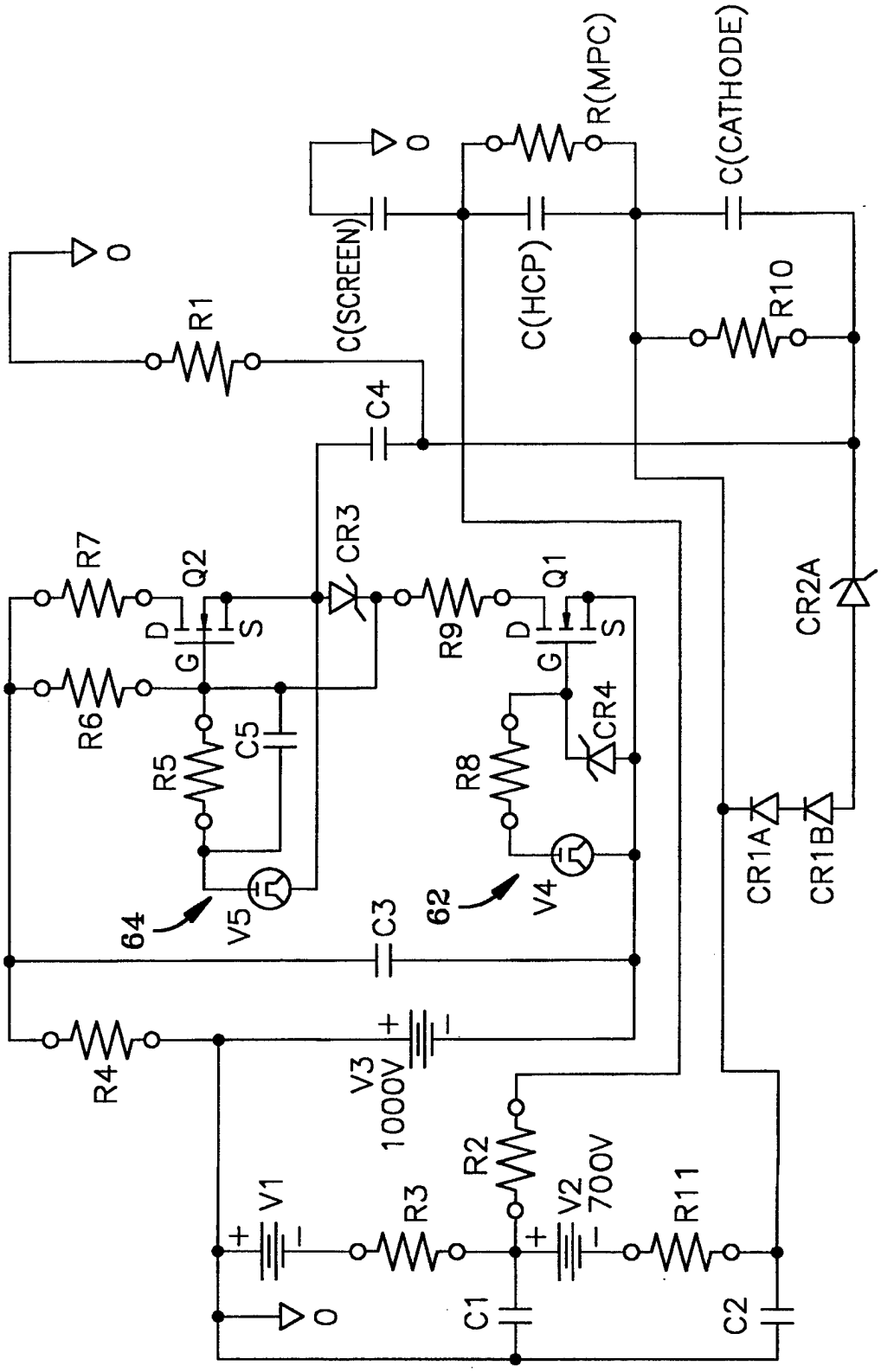
R1
0
C(SCREEN)
0
C(HCP)
R(MPC)
C(CATHODE)
R10
C4
CR3
R7
Q2
D
G
S
R6
R5
C5
V5
64
R9
Q1
D
G
S
CR4
R8
V4
62
C3
R4
V3
1000V
CR2A
CR1A
CR1B
V1
R3
R2
V2
700V
R11
C1
C2
0

FIG-6

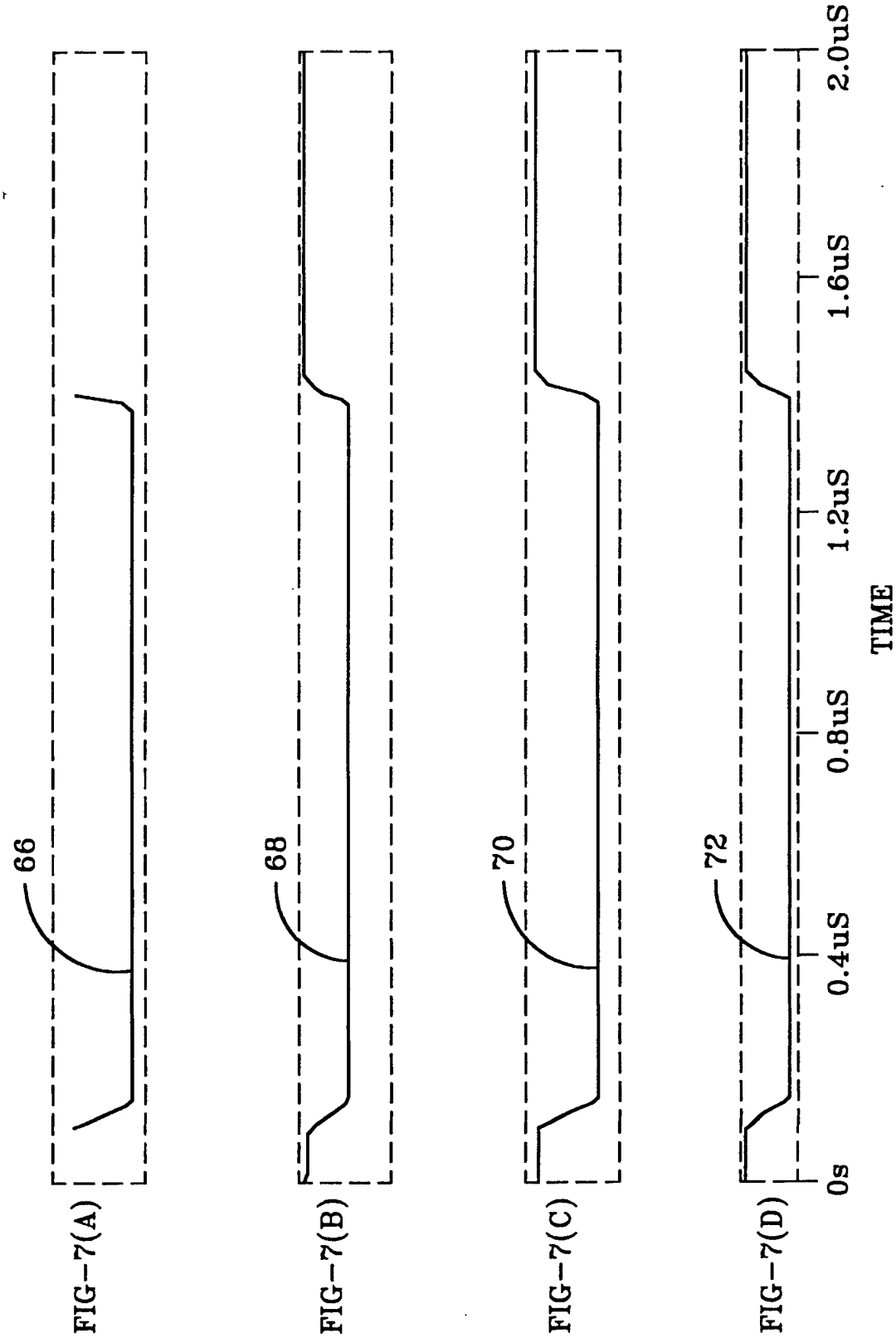
66
68
70
72
0s
0.4uS
0.8uS
1.2uS
1.6uS
2.0uS
TIME
FIG-7(A)
FIG-7(B)
FIG-7(C)
FIG-7(D)

FIG-7

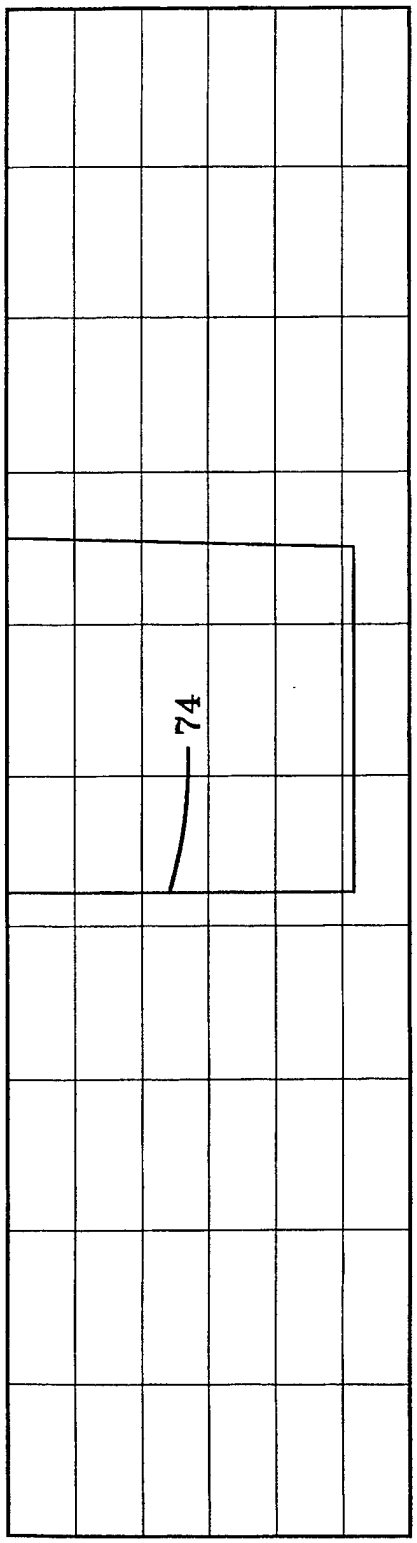

FIG-8(A)

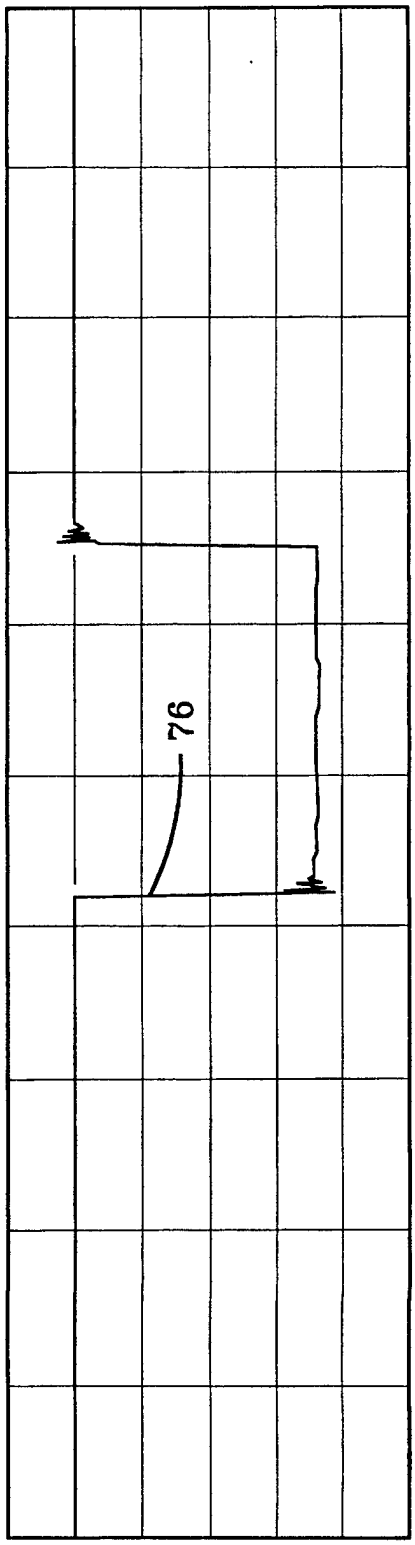

FIG-8(B)

FIG-8

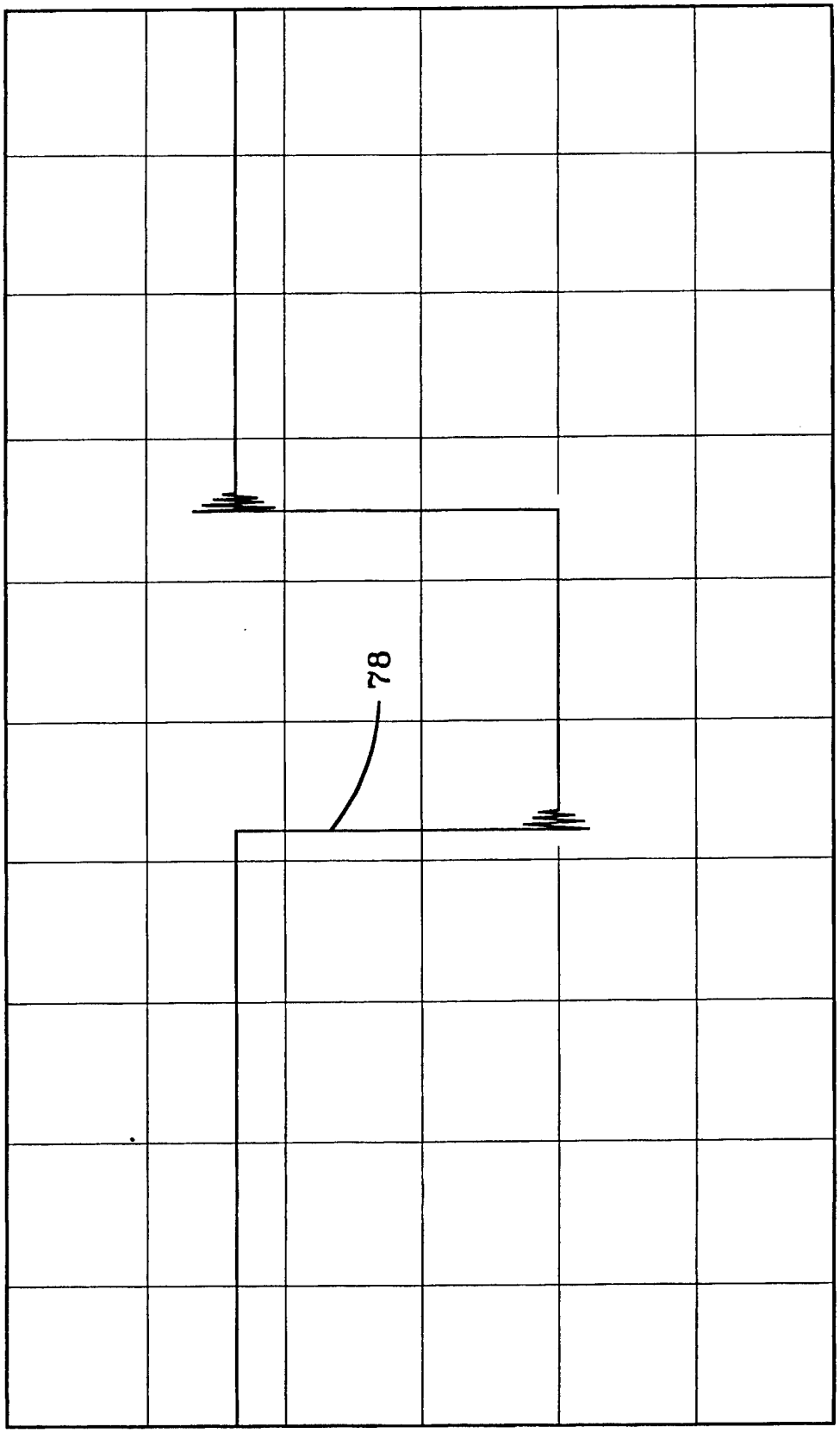

FIG-9

SWITCH PARTICULARLY SUITED FOR IMAGE INTENSIFIER TUBE SYSTEM

STATEMENT OF GOVERNMENT INTEREST

This invention described herein may be manufactured and used by or for the Government of the United States of America for governmental purposes without the payment of any royalties thereon or therefor.

BACKGROUND OF THE INVENTION

The present invention is related to an image intensifier tube (IIT) system particularly suited for night vision and, more particularly, to an IIT system having a cathode switch for an IIT system with reduced power consumption and reduced noise generated by associated high voltage switching.

Image intensifier tubes that operatively cooperate with high voltage power supplies so as to form a night vision system having light amplification are known. Although these image intensifier tubes serve well their intended purpose they are sometimes plagued by relatively high power consumption and noise generated by high voltage switching.

In the majority of night vision applications, image intensifier tubes are operated in a continuous "on" mode. Light gain is controlled by varying the voltage applied across one of the IIT system's major elements, that is, across the micro channel plate (MCP).

In certain applications, which require wide dynamic range and/or movement of the platform of the IIT system, it is necessary to also control tube "on" time. This is accomplished by a cathode switch that controls the voltage applied between the cathode and micro channel plate (MCP) elements of the IIT system. The cathode switch is a relatively complicated circuit which is floating at high voltage. A typical implementation is comprised of an output switch stage, a switch driver circuit, a memory element, an isolated gate receiver circuit, and a number of floating power supplies. A typical implementation utilizes 67 discrete components, including 13 transistors. A major disadvantage of this approach is that it utilizes complex low voltage circuitry which is floating at high voltage requiring all power and signal lines interfaces to possess high voltage isolation. It is desired to provide a cathode switch for an IIT system having reduced complexity, reduced power consumption and reduced high voltage switching noise.

SUMMARY OF THE INVENTION

The present invention is directed to a night vision system employing an imager intensifier tube but also having a cathode switch with reduced complexity, reduced power consumption and reduced high voltage switching noise.

The vision system comprises an image intensifier tube having four terminals and includes a photocathode having a first terminal at one of its ends, a micro channel plate having second and third terminals at one of its ends, and an anode having a fourth terminal at one of its ends. The vision system further comprises a high voltage power supply comprising a micro channel plate voltage multiplier, a screen voltage multiplier, a cathode voltage multiplier and a cathode switch. The micro channel plate voltage multiplier has positive and negative terminals. The negative terminal thereof is connected to the second terminal of the micro channel plate and the positive terminal thereof is connected to said third terminal of the micro channel plate preferably by way of a capacitor C1 and resistor R2 each having a first end connected to the positive terminal and with the second end of the capacitor C1 connected to a ground potential and the second end of resistor R3 connected to the third terminal. The negative terminal thereof is preferably further connected to one end of a capacitor C2 which has its other end connected to a ground potential.

The night vision system preferably comprises a pair of oppositely poled diodes CR1 and CR2 with one end of the pair connected to the first terminal of the photocathode and the other end of the pair connected to the second terminal of said micro channel plate. The screen voltage multiplier develops a negative voltage at one of its terminals connected to the first side of the capacitor C1. The screen voltage multiplier has a ground potential at another one of its terminals. The cathode voltage multiplier has a ground (gnd) and a negative (–) terminal and develops a negative voltage between the negative and ground terminals and preferably has a capacitor C3 arranged across its negative and ground terminals. The cathode switch has a common and a control terminal, the common has a first and second end with the first end connected to the first terminal preferably by way of the capacitor C4. The common has its second end switchable between ON and OFF positions in response to a gate signal applied at the control terminal. The ON position is connected to the negative terminal of the cathode voltage multiplier and the OFF position is connected to the first terminal preferably by way of a resistor R1.

BRIEF DESCRIPTION OF THE DRAWINGS

FIG. 1 is a block diagram primarily illustrating the image intensifier tube (IIT) system of the present invention.

FIG. 2 is an arrangement of a prior art cathode switch of an IIT system.

FIG. 3 is an arrangement of the cathode switch of the present invention within a high voltage power supply.

FIG. 4 is an equivalent diagram related to the arrangement of FIG. 3.

FIG. 5 is composed of FIGS. 5(A), 5(B) and 5(C) and is a schematic of the cathode switch of FIG. 3.

FIG. 6 is a schematic of a circuit used to simulate the circuit of FIG. 3.

FIG. 7 is composed of FIGS. 7(A), 7(B), 7(C) and 7(D) and illustrates various waveforms involved in the operation of the present invention.

FIG. 8 is composed of FIGS. 8(A) and 8(B) and illustrates various waveforms involved in analysis of the cathode switch of the present invention.

FIG. 9 illustrates a waveform involved in the analysis of the cathode switch of the present invention.

DETAILED DESCRIPTION OF THE PRESENT INVENTION

With reference to the drawings, wherein the same reference number indicates the same element throughout, there is shown in FIG. 1 a block diagram of the system **10** particularly illustrating the image intensifier tube **12** of the present invention. The image intensifier tube has four terminals and comprises a photocathode **14** having a first terminal **16** at one of its ends, a micro channel plate (MCP) **18** with an entrance or face **18**A and an exit or face **18**B and having second and third terminals **20** and **22** at one of its ends, and an anode **24** having a fourth terminal **26** at one of its ends. The terminals **16**, **20**, **22** and **26** extend into the high voltage power supply **28** of FIG. 3. The terminal **16** is further indicated by the terminology CATHODE, v (CATHODE);

terminal **20** is indicated by the terminology MCP IN, v (MCP IN); terminal **22** is indicated by the terminology MCP OUT, v (MCP OUT); and terminal **26** is indicated by the terminology ANODE, v (ANODE).

In operation, photons **30**, emanating from a scene **32**, impinge the photocathode **14** and create electrons **34**. If a negative bias is applied between the cathode first terminal **16** and the second terminal **18** (MCP IN), the IIT tube **12** is "on" and electrons **34** are then accelerated toward the face **18**A of the MCP **18**. A positive cathode bias voltage applied to the terminal **16** by means of HVPS **28**, prevents electrons from reaching the face **18**A of the MCP **18** and the IIT tube **12** is "off." The MCP **18** functions as an electron multiplier. More particularly, the MCP **18** consists of millions of small, hollow glass tubes bonded together. The length to diameter ratio of the individual tubes of the MCP **18** is approximately 40. Metal electrodes are deposited on both faces **18**A and **18**B of the MCP **18** array. A voltage applied across the MCP, that is, across terminals **20** and **22** by the HVPS **28**, causes a strip current to flow which results in a charge being stored on the inside walls of the hollow glass tubes, **18**C. The amount of stored charge is directly proportional to the magnitude of the voltage applied across terminals **20** and **22**.

As seen in FIG. **1**, the glass tubes, illustrated as sloped boxes, are angled, as shown by angle Θ, at approximately 10 degrees with respect to the axis (not shown) of the IIT tube **12** so that electrons **34** accelerated into the array will strike the tube walls, such as **18**C. The electrons **34** striking the tube walls, such as **18**C, of the MCP **18** cause the generation of secondary electrons resulting in electron gain of the MCP **18**. A high voltage is also applied between MCP OUT and the screen of the IIT **12**, that is, across terminals **22** and **26** causing the electrons **36** which exit the MCP **18** at face **18**B thereof to be accelerated toward the screen **40** which is deposited on the face of the anode (shaded area). As the electrons **36** strike the anode **24**, the electrons **36** are collected as a screen current $i_a(t)$. The screen **40** has a phosphor coating which the striking electrons **36** excite resulting in the emission of photons **38**. Since the IIT tube **12** is constructed to be spatially coherent, the image at the screen **40** is an amplified recreation of the image at the photocathode, that is, scene **32**.

As discussed in the "Background" section, in the majority of night vision applications, image intensifier tubes are operated in a continuous "on" mode. Light gain is controlled by varying micro channel plate, (MCP), voltage. In certain special applications which require wide dynamic range and/or movement of the platform carrying the IIT system, it is necessary to also control tube "on" time. This is accomplished by controlling the cathode to MCP IN voltage. The basic circuit configuration used in prior art IIT high voltage power supply **200** is shown in FIG. **2** comprised of a plurality of elements having a general description or being of the type given in Table 1.

TABLE 1

ELEMENT	GENERAL DESCRIPTION/TYPE
42	SCREEN VOLTAGE MULTIPLIER
44	MICRO CHANNEL PLATE (MCP) MULTIPLIER
210	CATHODE SWITCH
212	NEGATIVE POWER SOURCE OF ABOUT 20 TO 60 VOLTS d.c.
214	POSITIVE POWER SOURCE OF ABOUT 180 VOLTS d.c.

TABLE 1-continued

ELEMENT	GENERAL DESCRIPTION/TYPE
R1	100 Ω
R2	1K
C1	1000 pf
C2	4000 pf

As seen in FIG. **2**, the high voltage supply **200** includes a screen voltage multiplier **42** and a MCP voltage multiplier **44**, both to be further described with reference to FIG. **3**, and wherein the screen voltage multiplier **42** has a ground (gnd) terminal **46** and a negative (−6KV) terminal **48** and the MCP voltage multiplier has a positive (+) terminal **50** and a negative (neg) terminal **52**.

As further seen in FIG. **2**, the cathode switch **210** circuitry is floating, but is referenced to the V(MCP IN) potential supplied by the MCP voltage multiplier **44**, which is nominally 7000 volts below ground. When the cathode switch is in the "off" position, the cathode is biased positive by power source **212** with respect to the MCP IN voltage which turns the IIT tube **12** "off." This bias voltage is typically in the range of 20 to 60 volts. The IIT tube **12** is turned "on" by applying a negative potential, supplied by power source **214**, to the cathode, via terminal **16**, of the IIT system. In one embodiment an "on" voltage of 180 volts is typically required. The cathode switch **210** is controlled by a gate signal, typically generated by a timing subsystem of the IIT system, which is referenced to ground.

The prior art cathode switch **210** requires a relatively complicated circuit so as to be "floating" at high voltage. A typical implementation is comprised of an output switch stage, switch driver circuit, memory element, isolated gate receiver circuit, and a number of floating power supplies. Switch "on" time varies from less than 1 μsec to 1000 μsecs. Turn "on" and turn "off" times must be in the order of 100 nsecs. The general requirement is for relatively high speed switching of hundreds of volts while consuming minimum average power. One prior art cathode switch **210** utilizes 67 discrete components including 13 transistors. In one application of the cathode switch **210**, a **240** volt output is switched in less than 100 nsecs, and total power consumption is less than 250 mWatts. A circuit of this type is relatively difficult to implement, as it requires critical tradeoffs between many interrelated and conflicting requirements such as: fast switching, large voltage swings, low power consumption, high voltage isolation, high circuit impedance, noise immunity, fault protection, complexity, size, etc. The major disadvantage of this approach is that it utilizes complex low voltage circuitry which is floating at high voltage. Further, all power and signal lines interfaces require high voltage isolation to maintain the floating condition of the cathode switch **210**.

In another application, the cathode switch **210** is desired to supply a cathode "on" voltage of nearly 900 volts with 100 nsec switching times. This requirement results in increased circuit complexity and power consumption. In addition, the cathode signal swing of 900 volts in less than 100 nsecs generates severe noise transients which couple to the input drive signals commonly causing very serious noise interference problems. The present invention provides a cathode switch circuit which yields a solution to the problems outlined above. The cathode switch of the present invention is referenced to ground eliminating the need of floating at high voltages, thereby, greatly simplifying the power and signal interfacing. The practice of the present

invention may be further described with reference to FIG. 3 illustrating a plurality of elements some already shown in FIG. 2 and with the additional elements identified in Table 2.

TABLE 2

ELEMENT	GENERAL DESCRIPTION/TYPE
54	CATHODE VOLTAGE MULTIPLIER
56	CATHODE SWITCH
C3	20 nf
C4	1000 pf
CR1	ZENER DIODE VS 1490
CR2	ZENER DIODE IN 6276A

The practice of this invention applies a voltage control signal to the cathode terminal **16** of an image intensifier tube (IIT), so as to switch the tube "on" and "off" in a manner normally accomplished by an exposure control circuit. The cathode voltage, applied to the cathode terminal **16**, is referenced to the micro channel plate input, (MCP IN) present on terminal **20** and which voltage is typically six (6) to seven (7) thousand volts below ground potential. A small cathode to MCP IN positive voltage present on the OFF position of the cathode switch **56** of the present invention turns the IIT tube **12** "off." Several hundred volts negative potential present on the ON position of the cathode switch **56** is desired to turn the IIT tube **12** "on."

In general, the high voltage power supply **28** of FIG. **3** of the present invention comprises a micro channel plate (MCP) voltage multiplier **44** having position and negative terminals **50** and **52** respectively and develops a voltage between its positive and negative terminals **50** and **52**. The negative terminal **52** is connected to the second terminal **20** of the micro channel plate **18** and the positive terminal **50** is connected to the third terminal **22** of the micro channel plate **18** preferably by way of a capacitor C1 and resistor R2 each having a first end connected to the positive terminal **50** and with the second end of capacitor C1 connected to a ground potential and the second end of resistor R3 connected to the third terminal **22**. The negative terminal **52** is further connected to one end of a capacitor C2 which has its other end connected to a ground potential.

The high voltage power supply **28** preferably has a pair of oppositely poled diodes CR1 and CR2 with one end of the pair connected to the first terminal **16** of the photocathode of the IIT **12** and the other end of the pair of diodes CR1 and CR2 connect to the second terminal **20** of the micro channel plate **18**.

The high voltage power supply **28** has a screen voltage multiplier **42** which develops a negative voltage at its terminal **48** that is connected to the first side of the capacitor C1. The screen voltage multiplier **42** has a ground potential at another one of its terminals **46**.

The high voltage power supply **28** also has a cathode voltage multiplier **54** which has ground (gnd) and negative (−) terminals **58** and **60**, respectively, and develops a negative voltage between the negative and ground terminals **58** and **60**. The cathode voltage multiplier **54** preferably has a capacitor C3 arranged across its negative and ground terminals **58** and **60**.

The high voltage power supply **28** further has a cathode switch **56** which is of particular importance and has a common **56**A and a (cont) control terminal. The common **56**A has a first and second end with the first end connected to an output (OUT) terminal of the cathode switch **56** connected to the first terminal **16** of the photocathode **14** by way of capacitor C4 and its second end switchable between ON and OFF positions in response to a gate signal applied at said control terminal. The ON position is connected to the negative terminal **60** of the cathode voltage multiplier **54** and the OFF position is connected to the first terminal **16** of the photocathode **14** preferably by way of a resistor R1.

FIG. **3** is a simplified block diagram showing the interrelationships of the cathode switch **56** within the high voltage power supply **28** of the present invention. From FIG. **3**, it is seen that the cathode switch **56** (OFF position) is referenced to ground. In this implementation, the positive terminal **58** (with respect to terminal **60**) of the cathode voltage multiplier **54** is tied to ground. The energy required for the cathode pulse that turns "on" the IIT tube **12** is stored on capacitor C3, which has a very high capacitance value. When the cathode switch **56** is in the "off" position, one terminal of high voltage capacitor C4 is tied to ground. The other terminal of capacitor C4 is connected to the cathode output line, that is, terminal **16**. The high voltage resistor R1 is permanently connected from ground to the cathode line, that is, terminal **16**. A d-c current path exists from the MCP IN line (terminal **20**) to ground via diodes CR1 and CR2, and resistor R1. The zener diode CR1 conducts in the forward direction, while diode CR2 is in the zener breakdown mode. The net voltage drop is approximately 20 volts. The cathode terminal **16** is, therefore, 20 volts positive with respect to the MCP IN terminal **20**. This provides the positive bias necessary to turn the IIT **12** "off." Under these conditions, the voltage across capacitor C4 is nominally equal to the MCP IN voltage at terminal **20**. When the cathode switch **56** is moves to the "on" position, capacitor C3 is connected in series with capacitor C4. Since capacitor C3 is charged to the voltage developed by the cathode voltage multiplier **54** (cathode supply voltage), the combined voltage across the series combination (C3 and C4) is approximately equal to V(MCP IN) plus the cathode supply voltage. As the cathode switch **56** output swings from ground to the negative cathode voltage, the cathode terminal **16** is driven negative with respect to the MCP IN terminal **20** turning diode CR1 "off." This switching action of the cathode switch **56** causes the cathode tube capacitance, C(cathode), and capacitor C2 to also be placed in series with capacitors C3 and C4.

The equivalent circuit related to the operation of the cathode switch **56** is shown in FIG. **4** which also shows associated capacitance values. The circuit of FIG. **4** is used to determine the net charge re-distribution and voltage changes between the capacitors. Charge transfer equations are written in order to solve for the change in cathode voltage due to the switching action. The results of a related analysis is given in equation (1) below:

$$\Delta VC_c = \frac{VC3}{\left(1 + \frac{C_c}{C3} + \frac{C_c}{C2} + \frac{C_c}{C4}\right)} \quad (1)$$

The quantities shown in FIG. **4** are derived when it is assumed that a nominal cathode supply voltage of 1000 volts exists and which is generated by the cathode voltage multiplier **54**. Substituting the capacitor values, shown in the example of FIG. **4**, results in an increase in cathode voltage of 950 volts. Subtracting the "off" voltage of 20 volts gives an effective "on" voltage of 930 volts. The voltages on capacitors C3, C2, and C4 are reduced by 1.0 volts, 9.5 volts, and 38 volts, respectively. The details of the circuit switch **56** is shown in FIG. **5** composed of FIGS. **5**(A), **5**(B) and **5**(C) and is comprised of a plurality of elements some of

which have already been described and with the additional elements thereof given in Table 3.

TABLE 3

ELEMENT	GENERAL DESCRIPTION/TYPE
PS1	FLOATING POWER SUPPLY (+12 V D.C.)
PS2	FLOATING POWER SUPPLY (+12 V D.C.).
U1	SECOND OPTICAL COUPLER HCPL-5201 (HAVING RESET FUNCTION)
U2	FIRST OPTICAL COUPLER HCPL-5201 (HAVING RESET FUNCTION)
U3	SECOND DRIVER MIC 4426 AJ
U4	FIRST DRIVER MIC 4427 AJ
Q1	SECOND FIELD EFFECT TRANSISTOR (FET) MTP 3H120E
Q2	FIRST FIELD EFFECT TRANSISTOR (FET) MTP 3H120E
R3	12M
R4	2K
R5	10K
R6	4.4M
R7	62Ω
R8	20Ω
R9	62Ω
R(MCP)	200M
C5	0.082 μf
C(CATHODE)	40 pf
C(MCP)	70 pf
C(SCREEN)	12 pf
CR3	ZENER DIN 4746
CR4	ZENER DIN 4746
CR5	ZENER VS 148

In general, as seen in FIGS. 5(B) and 5(C) the cathode switch **56** comprises a first arrangement **62** comprising a first optical coupler U2 having an input serving as the control (cont) terminal and being responsive to the gate signal and generating an output signal therefrom. The first arrangement **62** has a first driver U4 connected to receive the output signal of the first optical coupler U2 and, in response thereto, generates first and second drive signals. The first arrangement **62** has a first field effect transistor (FET) Q1 having gate, source and drain electrodes and being responsive to the first drive signal applied to its gate electrode. The source electrode of U1 serves as the ON position of the cathode switch **56**.

The cathode switch **56** further comprises a second arrangement **64** having a second optical coupler U1 having an input connected to and being responsive to the second drive signal of the driver U4 and provides an output signal therefrom. The second arrangement **64** has a second driver U3 connected to receive the output signal of the second optical coupler U1 and, in response thereto, generates a third drive signal. The second arrangement **64** has a second field effect transistor (FET) Q2 having gate, source and drain electrodes and being responsive to the third drive signal of U1 which is applied to its gate electrode. The source electrode serves as the output terminal of the cathode switch **56** and is connected to the drain electrode of the first FET Q1 by way of a zener diode CR3, and the drain electrode of Q1 serves as the OFF position of the cathode switch **56**.

The second arrangement **64** further comprises a second floating power supply (PS2) having a positive and negative terminal and the first optical coupler U2 includes an input state comprising a light emitting diode having one of its ends connected to the negative terminal of the second floating power supply PS2. In addition, it is desired that the cathode switch **56** include a first floating power PS1 arranged as shown in FIG. 5. The first and second optical couplers U2 and U1 each have a reset (Rset) input. The circuit switch **56** further comprises a plurality of components, such as R3 arranged as shown in FIG. 5(A).

The two high voltage FETS, Q1 and Q2, shown in FIG. 5(C) are utilized in the output switching stage in a special anti-current spiking configuration. FET Q1 is normally "off," and there is no current flowing in diode CR3. Under these bias conditions, the gate of FET Q2 is pulled-up to ground potential by resistor R6, which turns FET Q2 "on." The source of FET Q2 is nearly at ground so high voltage capacitor C4 is charged to the V(MCP IN) potential at terminal **20**. Resistor R6 has a relatively large time constant associated with it, so the turn "on" response of this circuit is relatively slow. The primary purpose of FET driver U3 is to provide high speed response during the turn "on" of FET Q2. However, during static conditions, FET driver U3 provides additional "on" bias to FET Q2 via resistor R5. This additional drive essentially guarantees that FET Q2 is fully "on" which ensures that the positive terminal of capacitor C4 is at ground potential.

In operation, and with simultaneous reference to FIGS. 5(A), 5(B) and 5(C) the cathode switch **56** is turned "on" by applying a current pulse to the LED drive input. More particularly, the cathode switch **56** is rendered conductive by applying a current pulse, serving as a gate signal, to the input stage of the optical coupler U2. Integrated circuit U2 is an optocoupler which is used to couple the drive pulse from ground potential (external device) to the negative cathode potential of the cathode switch **56**. This voltage is nominally a negative 1000 volts for one application. The current drive pulse from the external device causes the output of the optocoupler U2 to go high. This signal is coupled to both inputs of integrated circuit U4 which is a dual, non-inverting FET driver. The output of the FET driver U4, via resistor R8, controls the gate of FET Q1. The low or zero volt, output holds the FET Q1 "off." When the gate driver U4 output swings to its high value, which is approximately 12 volts, FET Q1 is turned "on." Load current flows through diode CR3 in the forward direction into the drain of FET Q1. Since diode CR3 is in parallel with the gate to source input of FET Q2, forward biasing of CR3 causes FET Q2 to turn "off." Turn "on" time depends on the switching speeds of diode CR3 and the two FETs. Since all of these devices have extremely fast response times, turn "on" of the output switch, representative of the output of the cathode switch **56**, is very rapid with the output swinging nearly 1000 volts in less than 50 nanoseconds.

Another output of FET driver U4 supplies a current pulse to the LED input of optocoupler U1, that is, to the input stage of the optocoupler U1. Integrated circuits U1 and U3 are powered by floating power supply PS1 which is referenced to the source of FET Q2. The circuitry of U1 and U3 swings between ground and the negative cathode voltage in their operative states. The optocoupler U1 is desired for voltage isolation of the drive signal which is referenced to the negative cathode voltage, that is, the terminal **60** of the cathode voltage multiplier **54**. The input current pulse causes the output of U1 to go high which drives the FET driver U3 input low. This signal of U3, which is delayed by the propagation time of the two integrated circuits (U1 and U3), serves to hold FET Q2 "off" during steady state conditions. The forward current through diode CR3 consists only of the transient load current which is desired to discharge capacitor C4. When the discharge transient is over, diode CR3 turns "off."

In operation, when the external LED drive current pulse ends, that is, when the gate signal applied to the cathode switch **56** terminates, the output of optocoupler U2 goes low initiating the turn "off" sequence of the IIT tube **12**. The output of FET driver U4 goes low turning FET Q1 "off," via resistor R8 and the gate (G) electrode of FET Q1. The propagation time from the input of U2 to the output of driver U4 is nominally 300 nanoseconds. The drive signal applied to the gate of FET Q2, is delayed by an additional 300 nanoseconds by way of elements U1 and U2. During this time both of the FETs Q1 and Q2 are "off." When FET Q2 is turned "on," FET Q2 pulls the output positive until the output of FET Q2 at source electrode S is back to ground potential recharging capacitor C4 in the process. Both FETs, Q1 and Q2, however, may have relatively large non-linear gate-to-drain capacitances which should be charged and discharged during turn "on" and turn "off" of the output circuit. This complication is most severe during turn "off" of the IIT **12**. More particularly, when FET Q2 pulls the output high, a relatively large current flows into the drain electrode of FET Q1. This current charges the gate-to-drain capacitance from its initial value of approximately zero volts to its final "off" value of nearly 1000 volts. The sink for this current is the output circuit of FET Q1 driver U4. The FET Q1 source to drain voltage should remain below the threshold voltage in order for the device not to be driven back "on" by the charging current. This suggests that the FET Q1 driver U4 has a very low output impedance.

The resistor R8 at the output stage of U4 is desired so as to prevent oscillation of the FET Q2 input-driver output circuit combination. In addition, resistors R7 and R9 are desired to limit the peak current to an acceptable value which is approximately 6 amps for the implementation of one embodiment of the present invention.

In the practice of this invention a Pspice simulation, known in the art, was performed using the circuit arrangement of FIG. **6**, wherein the first and second arrangements **62** and **64** are also shown as V4 and V5 respectively and which is comprised of a plurality of elements most of which have already been described, but with the additional elements given in Table 4.

TABLE 4

ELEMENT	DESCRIPTION
CR1A	DIODE DIN4937
CR1B	DIODE DIN4937
CR2A	DIODE DIN4749
R10	10M
R11	100K
Q1A	FIELD EFFECT TRANSISTOR (FET) MTP3N 100/NC
Q2A	FIELD EFFECT TRANSISTOR (FET) MTP3N 100/NC
V1	POWER SUPPLY 6000 V D.C.
V2	POWER SUPPLY 700 V D.C.
V3	POWER SUPPLY 1000 V D.C.

The circuit of FIG. **6** yielded simulated results that agree very closely with calculated values and actual circuit test data. The simulated output switch waveforms are shown in FIG. **7** composed of FIG. **7**(A) illustrating a plot **66**; FIG. **7**(B) illustrating a plot **68**; FIG. **7**(C) illustrating a plot **70** and FIG. **7**(D) illustrating a plot **72**. The X axis of FIGS. **7**(A)–**7**(D) is time given in μseconds and the Y axis of FIGS. **7**(A) and (**7**B) is given in voltage.

FIG. **7**(A) shows the cathode switch output waveform **66** which has an amplitude of 999.7 volts. The MCP IN voltage (terminal **20** of FIG. **1**) is shown in FIG. **7**(B) for plot **68**. The simulation value of MCP IN voltage is 9.71 volts which can be favorably compared to the calculated value of 9.5 volts. The voltage waveform from cathode to MCP IN (between terminals **16** and **20** of FIG. **1**) is present in FIG. **7**(D). The simulated value of this voltage between terminals **16** and **20** is 951 volts, and the voltage calculated from the charge analysis is 950 volts. Similarly, the results obtained from the detail simulation of the cathode switch **56** itself were completely consistent with the calculated and measured data.

In the practice of the present invention, the circuit arrangement of FIG. **5**, that is, the high voltage power supply **28**, was tested. The floating power supplies of FIG. **5** were implemented with single stage diode-capacitor voltage multipliers which are driven from floating transformer secondaries. The cathode multiplier is typically a two stage unit which shares its drive signal with the screen voltage multiplier. A d-c cathode multiplier voltage of 913 volts was measured and the results thereof are shown in FIG. **8** comprised of FIG. **8**(A) showing a plot **74** and FIG. **8**(B) showing a plot **76**.

FIG. **8**(A) shows the voltage waveform plot **74** which was measured at the output (OUT) terminal of the cathode switch **56**. FIG. **8**(B) shows the cathode voltage pulse represented by plot **76**, referenced to ground. The results of the testing are further shown in FIG. **9** for a plot **78**.

The voltage waveform in FIG. **9** is the result of subtracting the MCP IN voltage (that is, voltage at terminal **20**) from the cathode voltage (that is, voltage at terminal **16**). In the testing that was performed, high voltage capacitive divider probes were used to obtain these waveforms so there is no d-c information. A battery powered oscilloscope was floated with respect to the MCP IN voltage. Results of these measurements verified the d-c performance as well as the transient performance. To summarize, numerous detail measurements were made under various operating conditions at every circuit node, and in all cases the measured data agreed very closely with calculated and simulated results.

It should now be appreciated that the present invention provides a cathode switch that supplies a cathode pulse amplitude of nearly 1000 volts. It should be further appreciated that the features of this invention include: the referencing of the cathode circuit to ground, the non-spiking high voltage FET output stage, and the coupling of the pulse to the cathode output terminal, via a high voltage capacitive network. Some of the advantages yielded by this invention are: minimum number of components at high voltage, low voltage interfacing of input power and signal lines to cathode switch circuit, switching generated interference minimized, low power consumption, fault tolerant, and reduced complexity. This invention provides an efficient and reliable means for high speed gating an image intensifier tube.

It should be still further appreciated that the present invention is comprised of a cathode switch circuit referenced to ground; a high voltage, anti-spiking, semiconductor switch output stage; and a high voltage capacitive coupling network. Variations on this design include; referencing the negative cathode switch circuit bus to ground, use of other solid state switching devices such as bipolar transistors, use of multiple series switching devices, use of other methods such as transformer coupling to isolate the input drive signals, use of other driver interface circuits, and other minor changes in the implementation.

Various additional modifications will become apparent to those skilled in the art. All such variations which basically

rely on the teachings to which the invention has advanced the art and properly considered within the scope of this invention.

What I claim is:

1. A vision system comprising:

(a) an image intensifier tube having four terminals and comprising:

(i) a photocathode having a first terminal at one of its ends;

(ii) a micro channel plate having second and third terminals at one of its ends; and

(iii) an anode having a fourth terminal at one of its ends; and

(b) a high voltage power supply comprising:

(i) a micro channel plate voltage multiplier having positive and negative terminals and developing a voltage between its positive and negative terminals, said negative terminal thereof being connected to said second terminal of the micro channel plate and said positive terminal thereof being connected to said third terminal of said micro channel plate by way of a capacitor C1 and resistor R2 each having a first end connected to said positive terminal and with the second end of capacitor C1 connected to a ground potential and the second end of resistor R3 connected to said third terminal, said negative terminal thereof being further connected to one end of a capacitor C2 which has its other end connected to a ground potential;

(ii) a pair of oppositely poled diodes CR1 and CR2 with one end of said pair connected to said first terminal of said photocathode and the other end of said pair connected to said second terminal of said micro channel plate;

(iii) a screen voltage multiplier developing a negative voltage at one of its terminals connected to the first side of said capacitor C1, said screen voltage multiplier having a ground potential at another one of its terminals;

(iv) a cathode voltage multiplier having a ground (gnd) and a negative (–) terminal and developing a negative voltage between said negative and ground terminals and having a capacitor C3 arranged across its negative and ground terminals;

(v) a cathode switch having a common and a control terminal, said common having a first and second end with the first end an output terminal connected to said first terminal by way of a capacitor C4 and its second end switchable between ON and OFF positions in response to a gate signal applied at said control terminal, said ON position connected to said negative terminal of said cathode voltage multiplier and said OFF position connected to said first terminal by way of a resistor R1.

2. The vision system according to claim 1, wherein said cathode switch comprises:

(a) a first arrangement comprising;

(i) a first optical coupler having an input serving as said control terminal and being responsive to said gate signal and generating an output signal;

(ii) a first driver connected to receive said output signal of said first optical coupler and, in response thereto, generating first and second drive signals; and

(iii) a first field effect transistor (FET) having gate, source and drain electrodes and being responsive to said first drive signal applied to its gate electrode, said source electrode serving as said ON position of said cathode switch;

(b) a second arrangement comprising:

(i) a second optical coupler having an input connected to and being responsive to said second drive signal and providing an output;

(ii) a second driver connected to receive said output of said second optical coupler and, in response thereto, generating a third drive signal;

(iii) a second field effect transistor (FET) having gate, source and drain electrodes and being responsive to said third drive signal applied to its gate electrode, said source electrode serving as said output terminal of said cathode switch and connected to said drain electrode of said first FET by way of a zener diode, and said drain electrode serving as said OFF position of said cathode switch.

3. The vision system according to claim 2, wherein said second arrangement further comprises a second floating power supply having a positive and negative terminal and said first optical coupler includes an input state comprising a light emitting diode having one of its ends connected to said negative terminal of said second floating power supply.

* * * * *