US005748667A

# United States Patent [19]

Dyckman

[11] Patent Number: 5,748,667

[45] Date of Patent: May 5, 1998

[54] SPREAD SPECTRUM MODULATION USING TIME VARYING LINEAR FILTERING

[76] Inventor: Howard L. Dyckman, 365 Newton Rd., #C5, Warminster, Pa. 18974-5332

[21] Appl. No.: 621,400

[22] Filed: Mar. 25, 1996

[51] Int. Cl.[6] ..... H04K 1/00

[52] U.S. Cl. ..... 375/200

[58] Field of Search ..... 375/200, 201, 375/202, 203, 206, 350; 364/724.01; 381/51

[56] References Cited

U.S. PATENT DOCUMENTS

5,005,204 4/1991 Deaett ..... 381/51

5,012,490 4/1991 Myer ..... 375/350

OTHER PUBLICATIONS

A Novel Approach to Spread Spectrum Communication Using Periodic Time Varying Filters. Duverdier et al. May 1995 .Information Theory and Applications II. 4th Canadian Workshop. pp. 64–75.

*Primary Examiner*—T. Ghebretinsae

*Attorney, Agent, or Firm*—Harvey Fendelman; Peter A. Lipovsky; Michael A. Kagan

[57] ABSTRACT

A method for transmitting information by radio over a wide bandwidth comprises the steps of: inputting a data signal into a time varying filter modulator; spreading the data signal in time and in frequency to produce a wideband signal; modulating the wideband signal onto an RF carrier to provide an RF output signal; and transmitting the RF output signal. The step of spreading includes performing a series of linear transformations to the data signal.

2 Claims, 13 Drawing Sheets

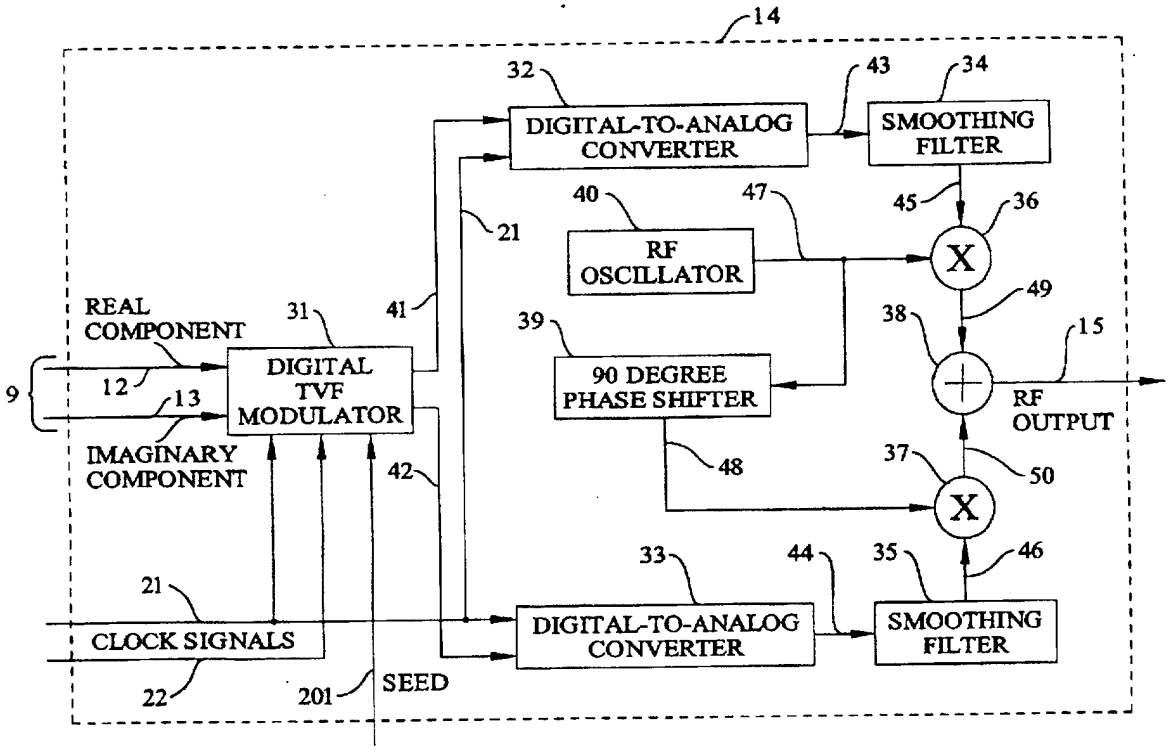


Approved for public release; Distribution Unlimited

19981207 101

DTIC QUALITY INSPECTED 4

Copy provided by PTCS from the PTO APS Image Data Base on 08/28/1998 NOSC 77685

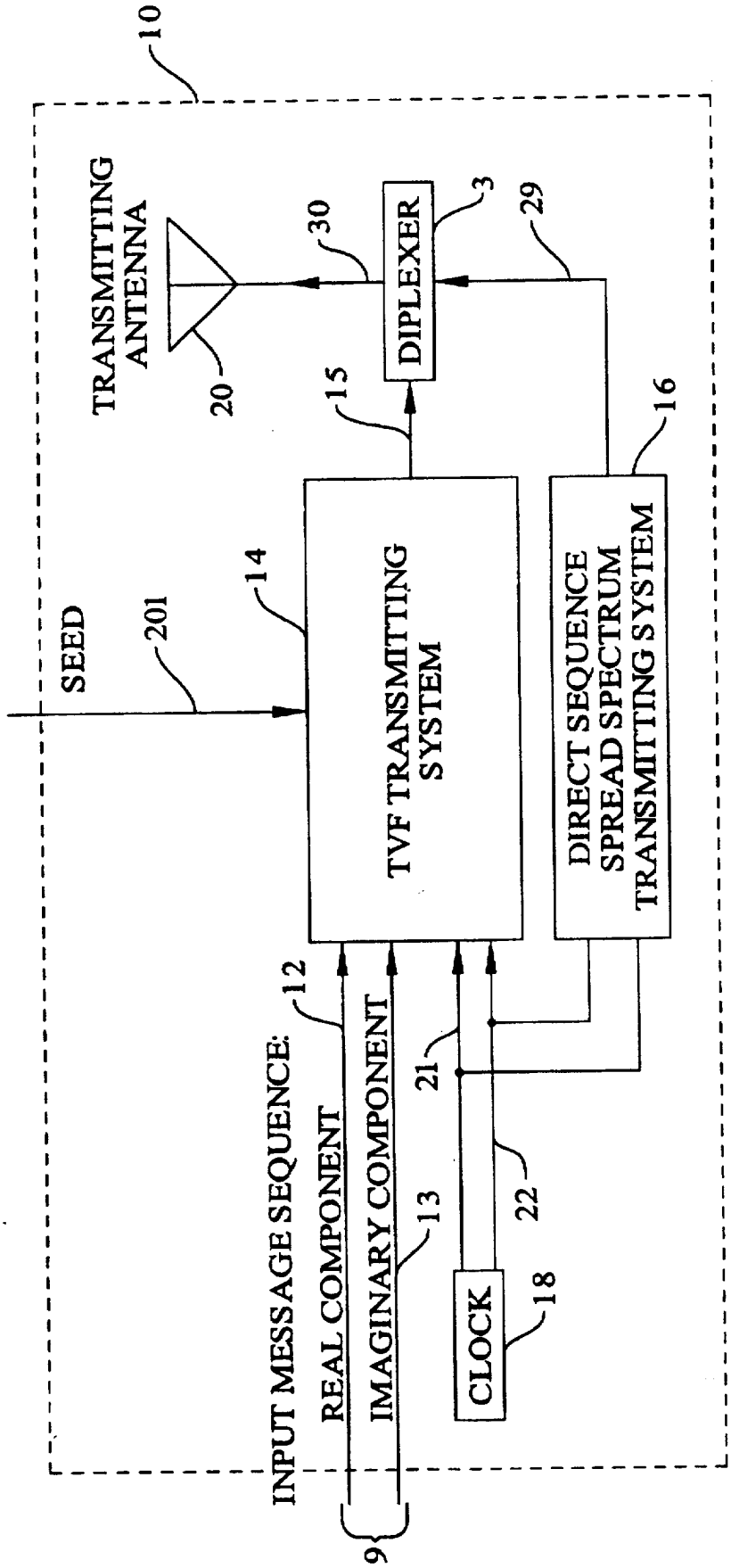


FIG. 1

Copy provided by PTCS from the PTO APS Image Data Base on 08/28/1998

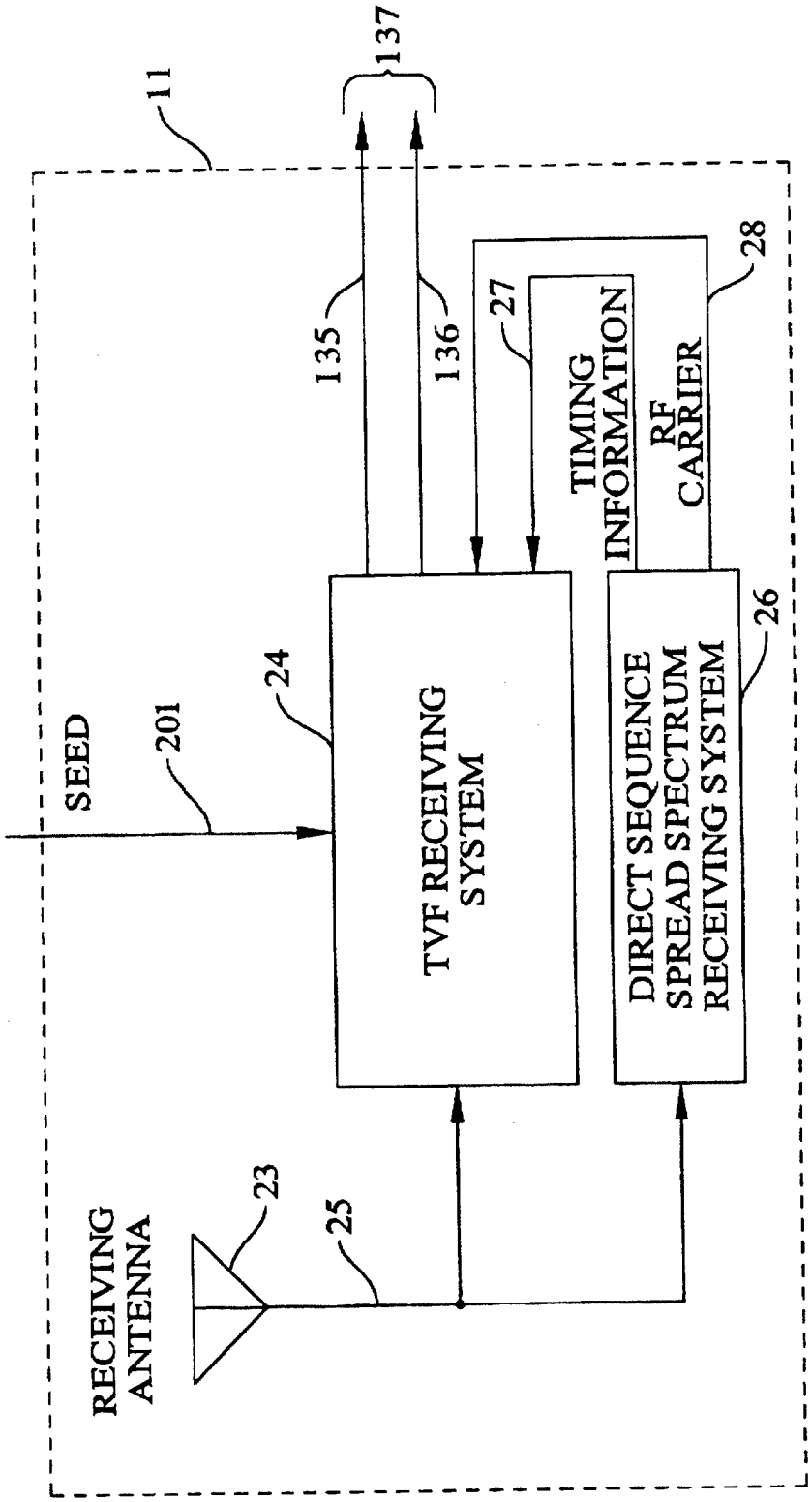


FIG. 2

Copy provided by PTCS from the PTO APS Image Data Base on 08/28/1998

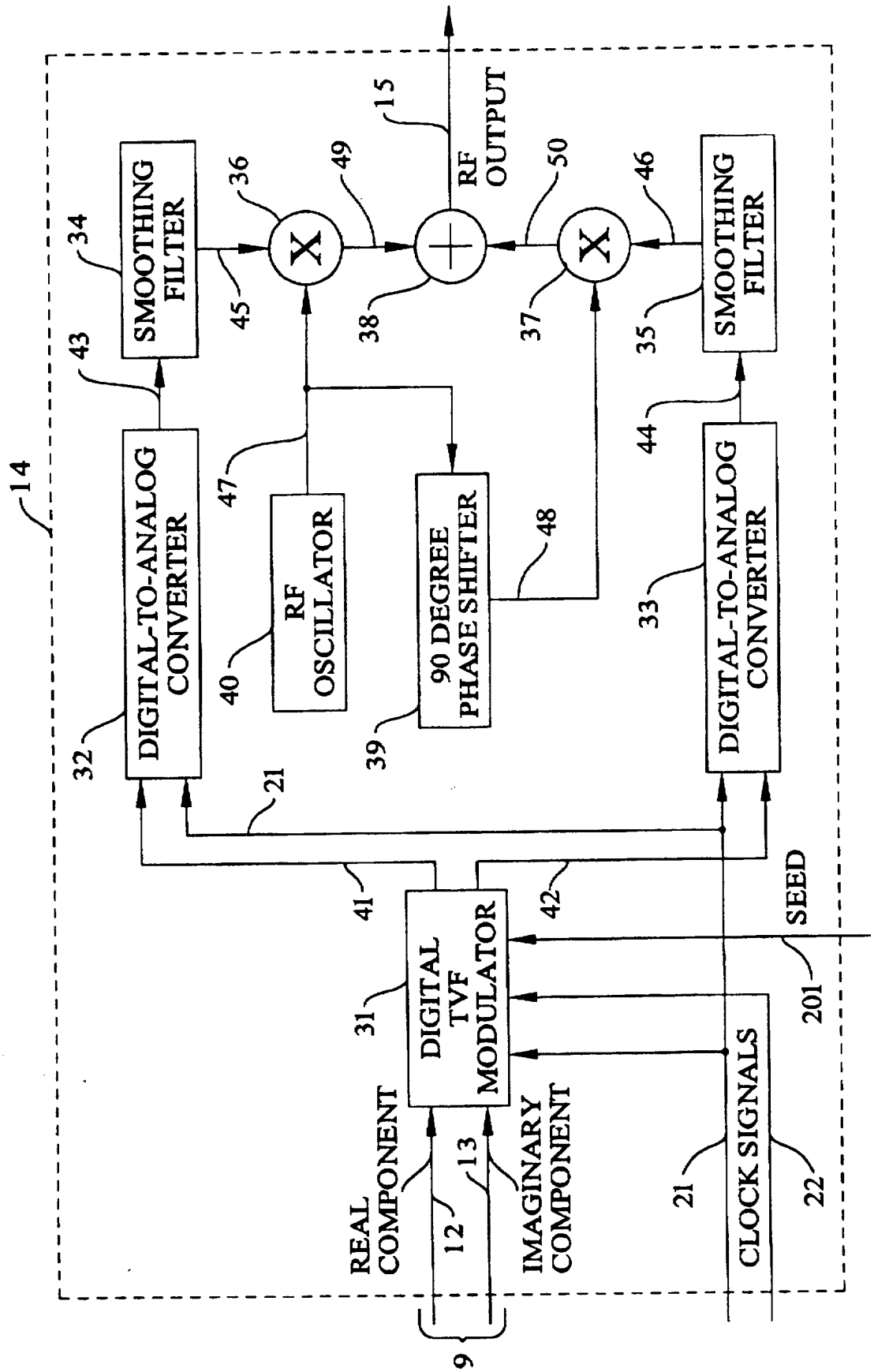


FIG. 3

Copy provided by PTCS from the PTO APS Image Data Base on 08/28/1998

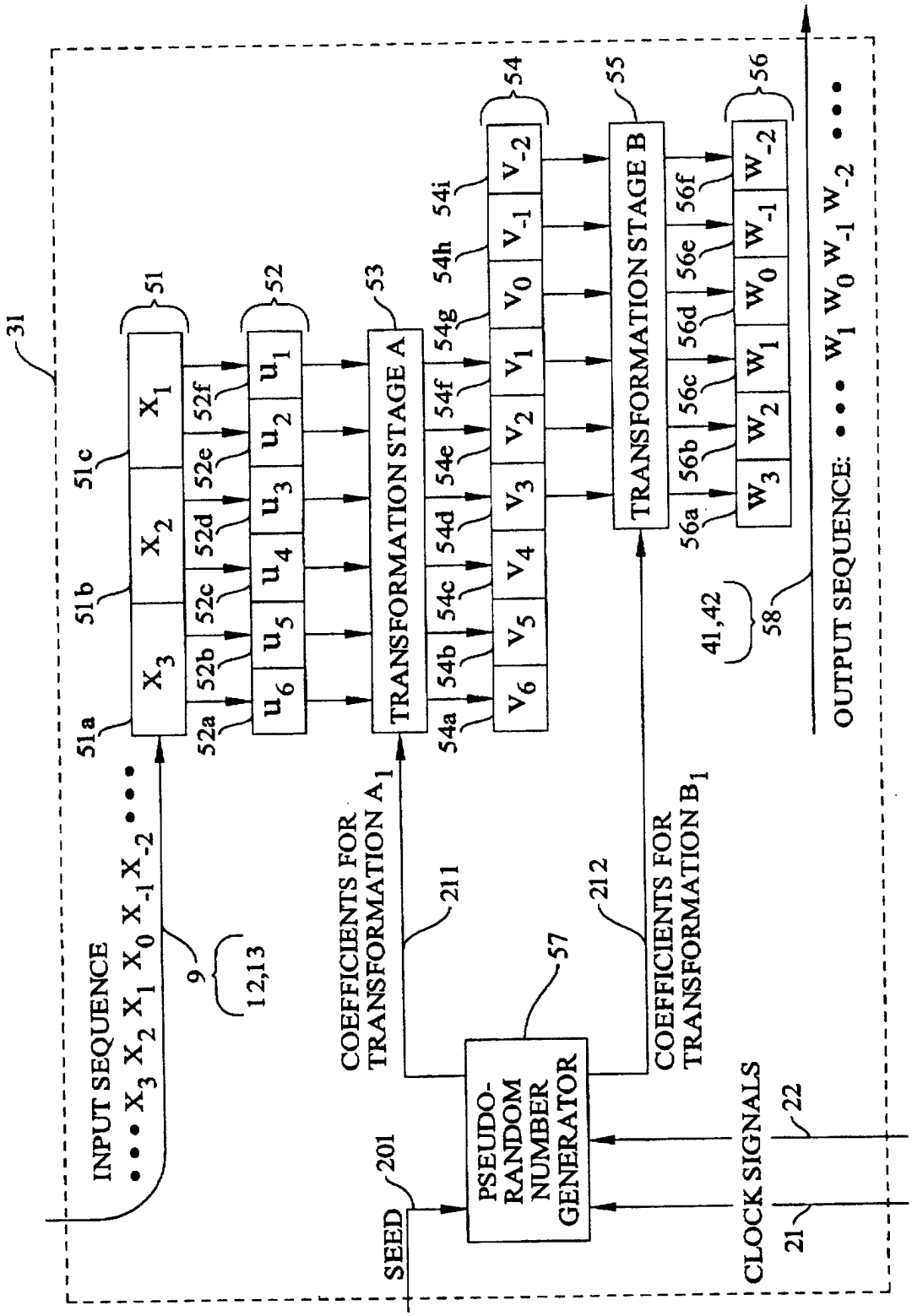


FIG. 4

Copy provided by PTCS from the PTO APS Image Data Base on 08/28/1998

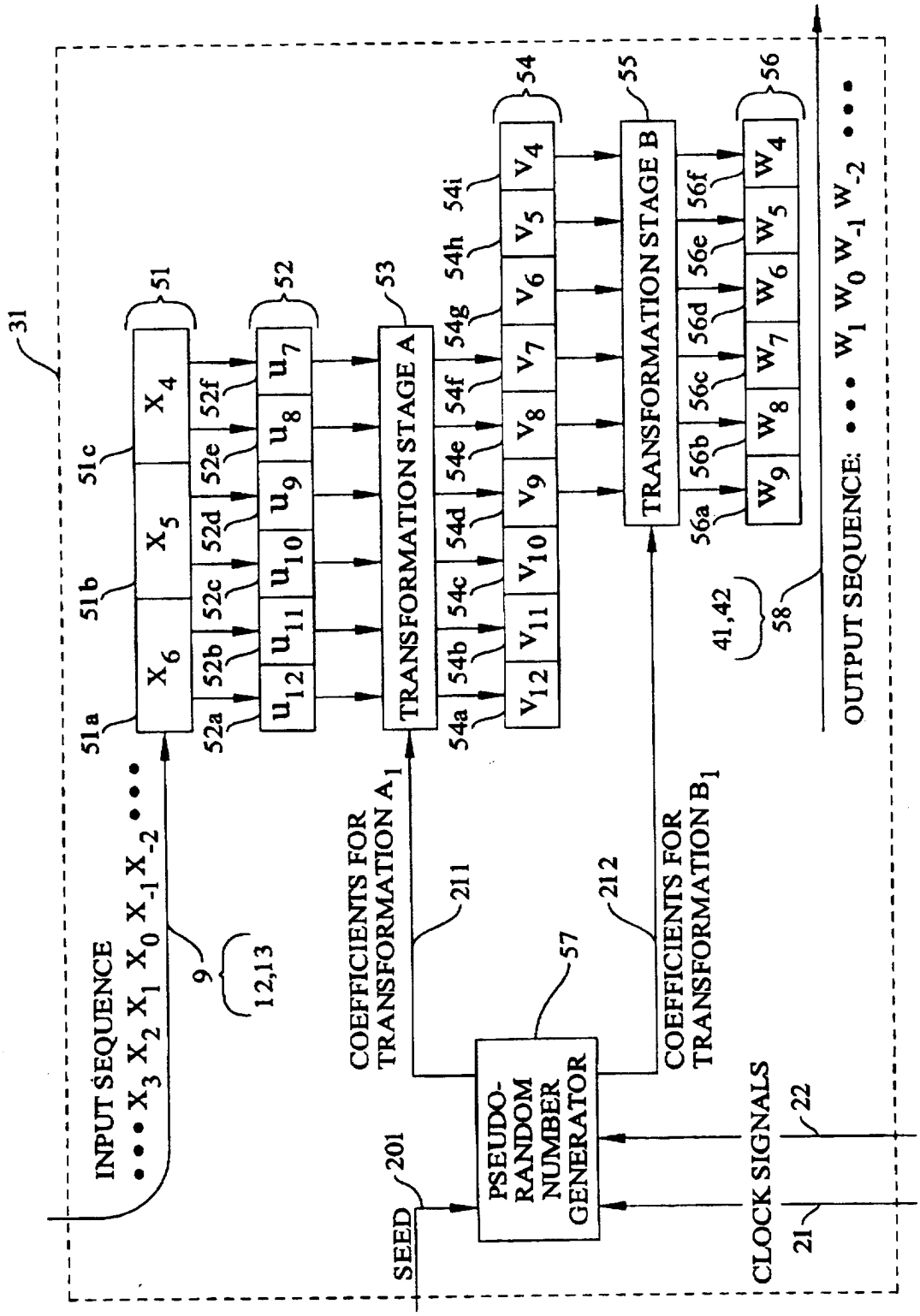


FIG. 5

Copy provided by PTCS from the PTO APS Image Data Base on 08/28/1998

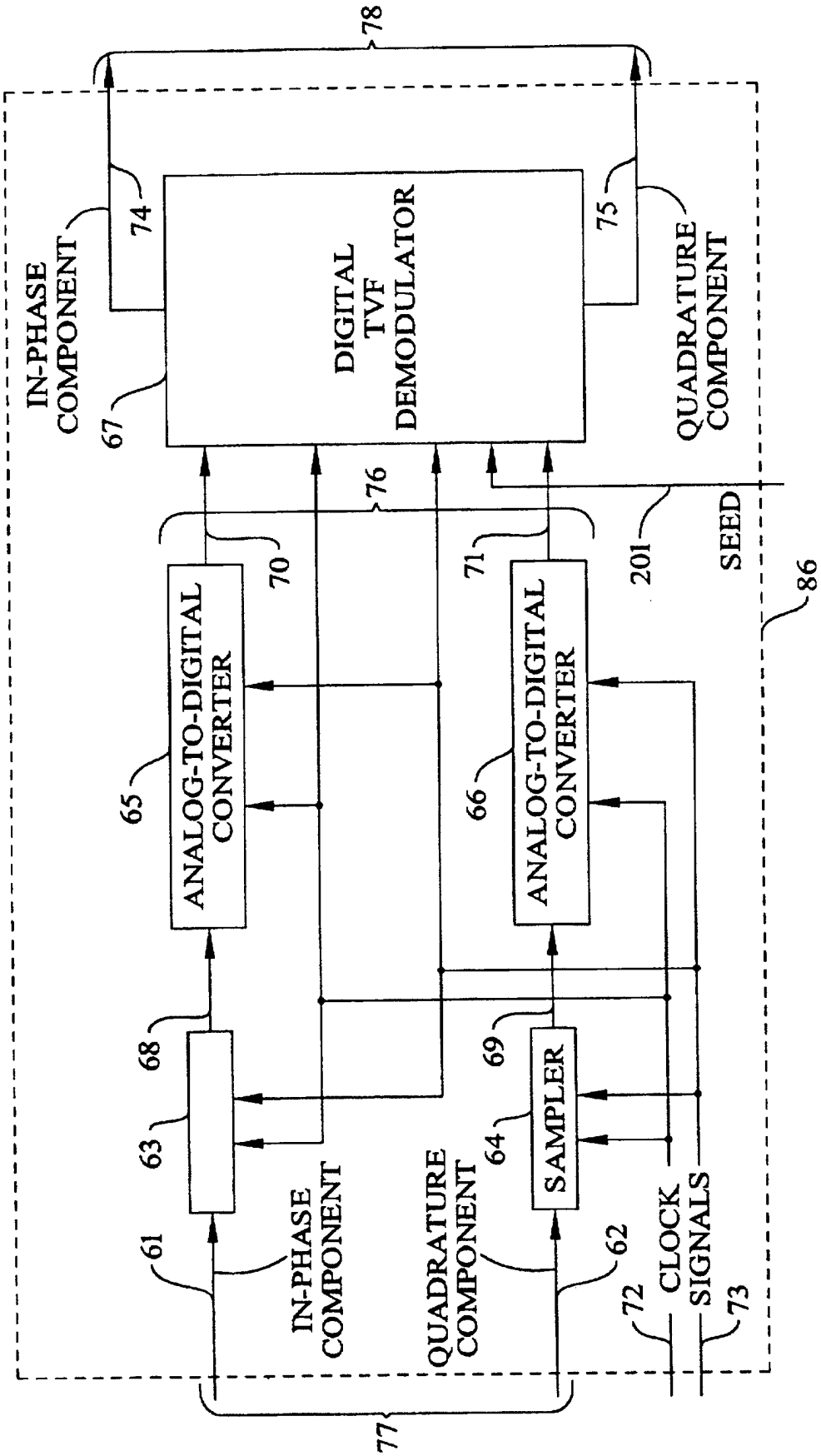


FIG. 6

Copy provided by PTCS from the PTO APS Image Data Base on 08/28/1998

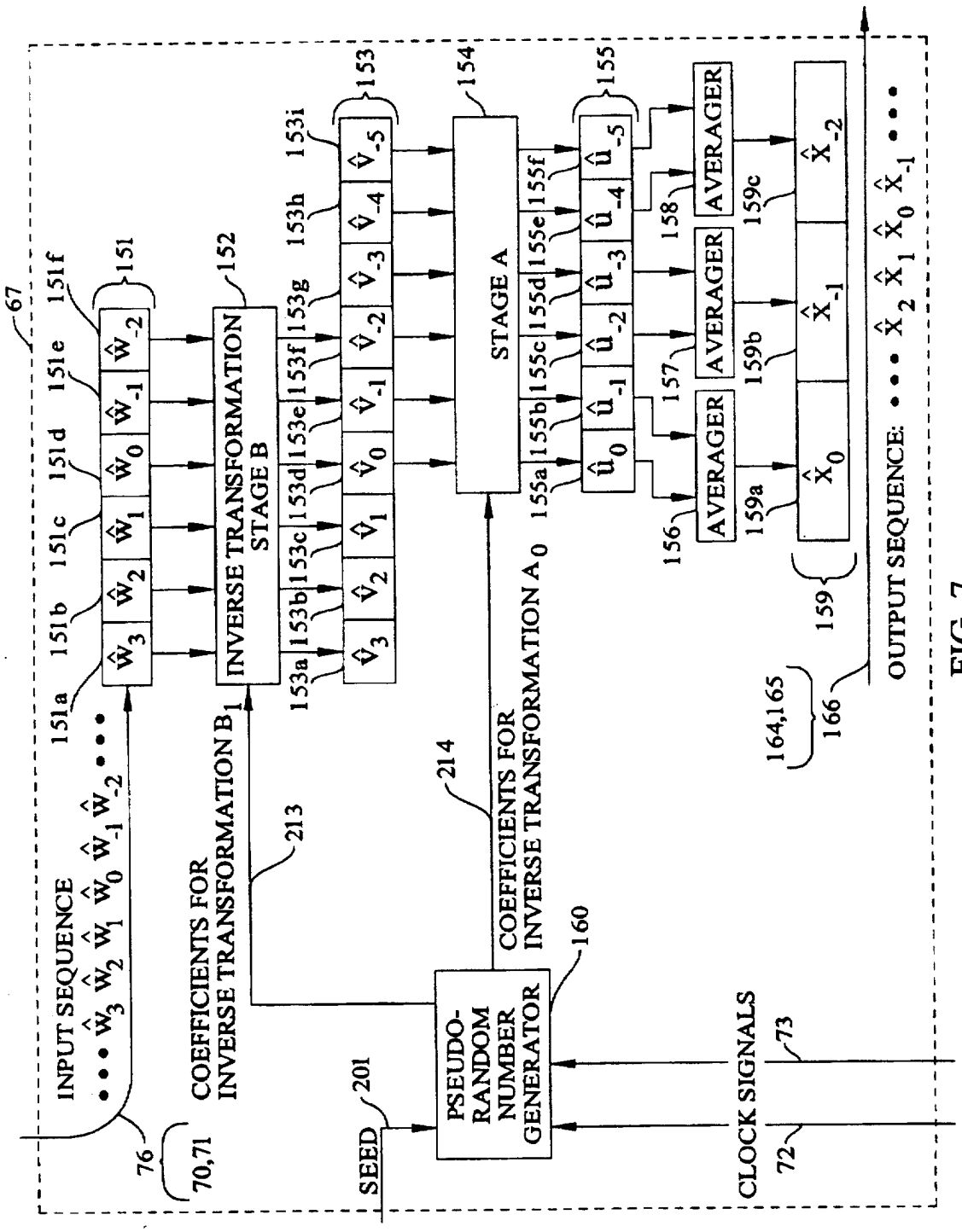


FIG. 7

Copy provided by PTCS from the PTO APS Image Data Base on 08/28/1998

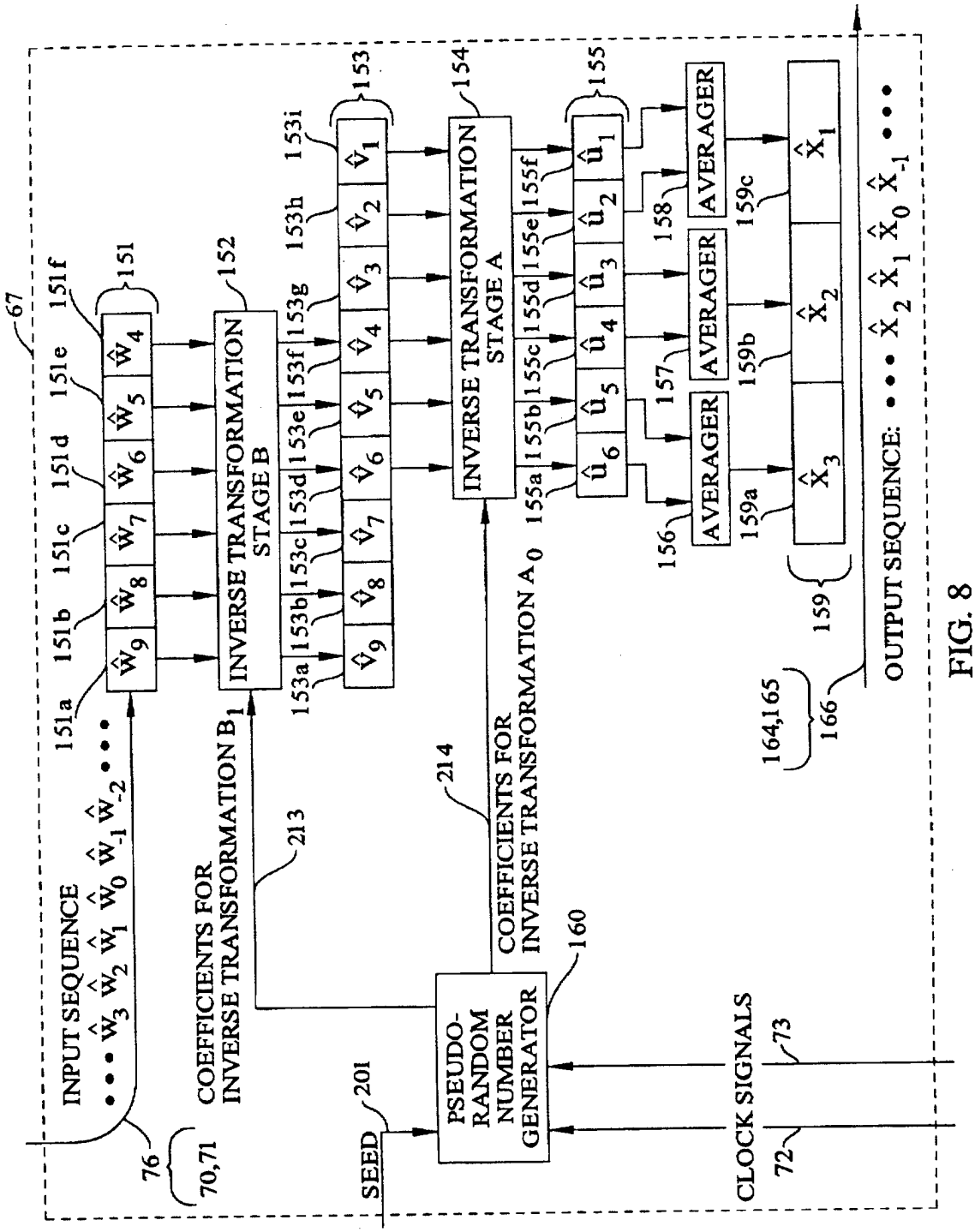
INPUT SEQUENCE
INVERSE TRANSFORMATION STAGE B
INVERSE TRANSFORMATION STAGE A
COEFFICIENTS FOR INVERSE TRANSFORMATION B1
COEFFICIENTS FOR INVERSE TRANSFORMATION A0
PSEUDO-RANDOM NUMBER GENERATOR
SEED
CLOCK SIGNALS
AVERAGER
AVERAGER
AVERAGER
OUTPUT SEQUENCE:
67
76
70,71
151
151a
151b
151c
151d
151e
151f
152
153
153a
153b
153c
153d
153e
153f
153g
153h
153i
154
155
155a
155b
155c
155d
155e
155f
156
157
158
159
159a
159b
159c
160
164,165
166
201
213
214
72
73

FIG. 8

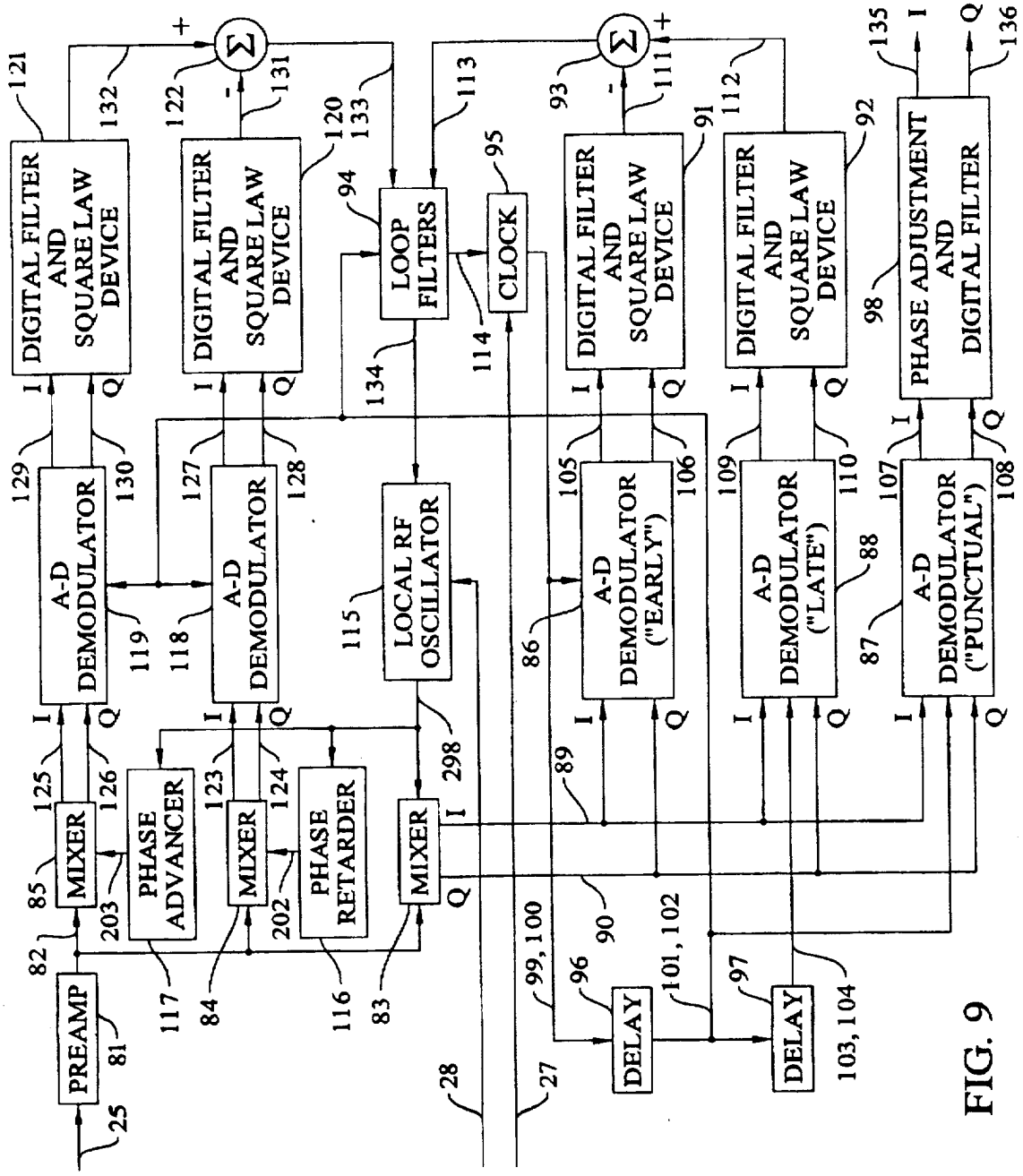


FIG. 9

Copy provided by PTCS from the PTO APS Image Data Base on 08/28/1998

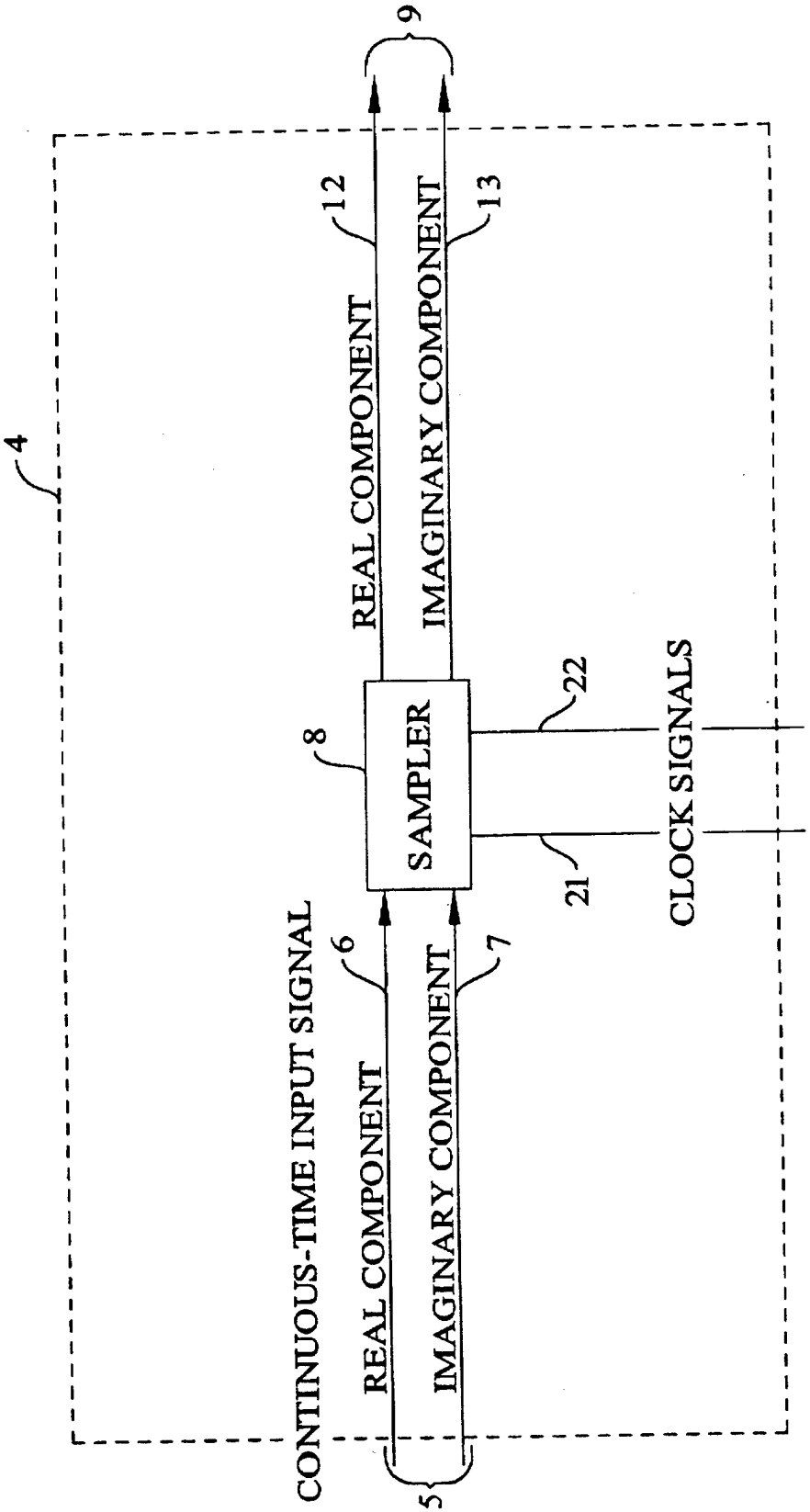


FIG. 10

Copy provided by PTCS from the PTO APS Image Data Base on 08/28/1998

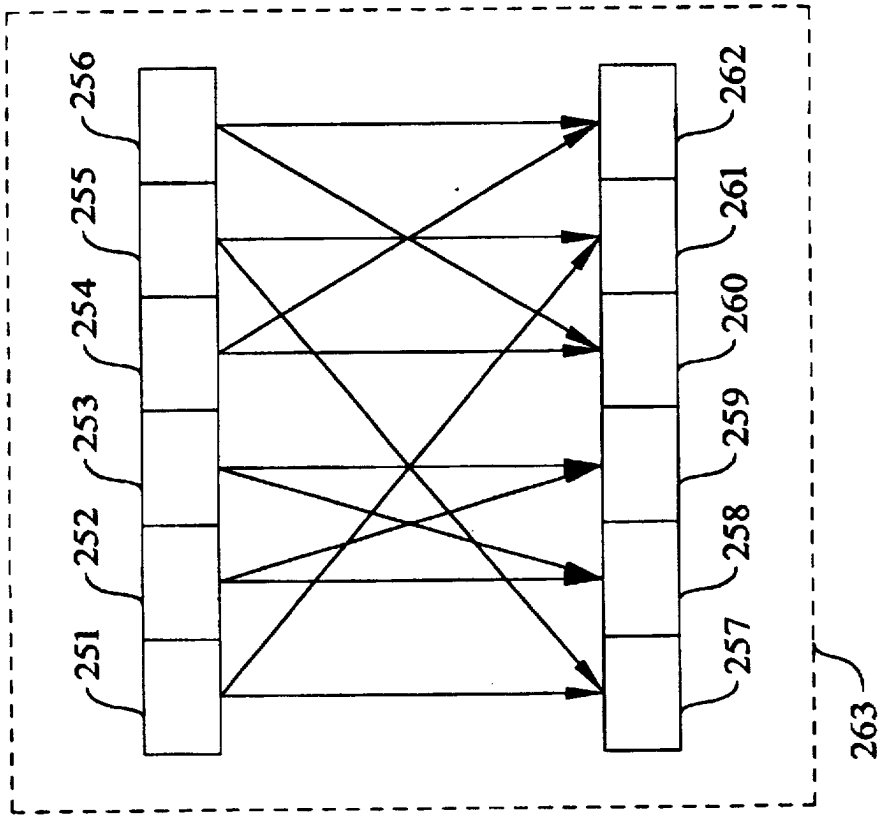


FIG. 11

Copy provided by PTCS from the PTO APS Image Data Base on 08/28/1998

$$Q = \begin{bmatrix} Q_{1,1} & Q_{1,2} \\ Q_{2,1} & Q_{2,2} \end{bmatrix} = \begin{bmatrix} \exp(j\,\alpha\cos\theta) & -\exp(j\,\beta\sin\theta) \\ \exp(j\,\gamma\sin\theta) & \exp(j\,\delta\cos\theta) \end{bmatrix}$$

249

WHERE $\alpha - \beta - \gamma + \delta$ = MODULO $2\pi$

250

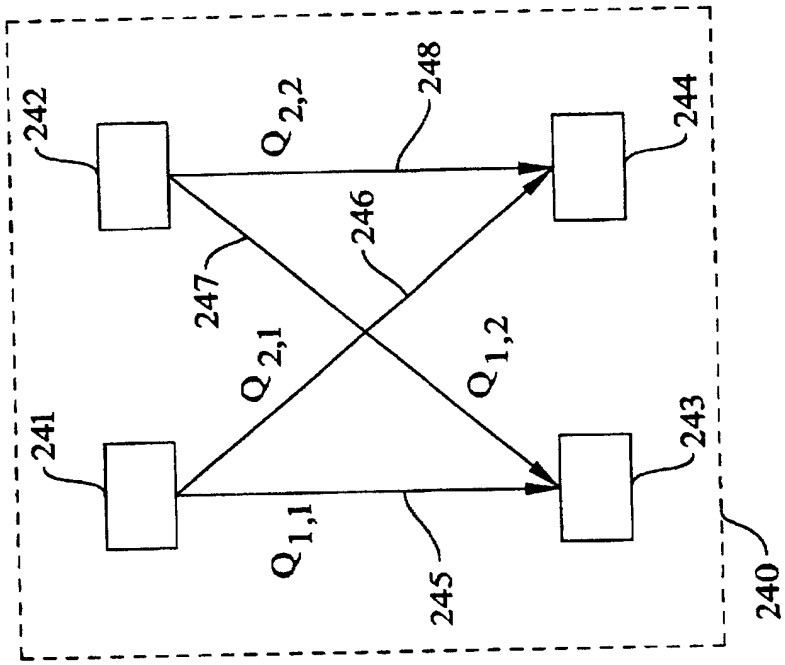


FIG. 12

Copy provided by PTCS from the PTO APS Image Data Base on 08/28/1998

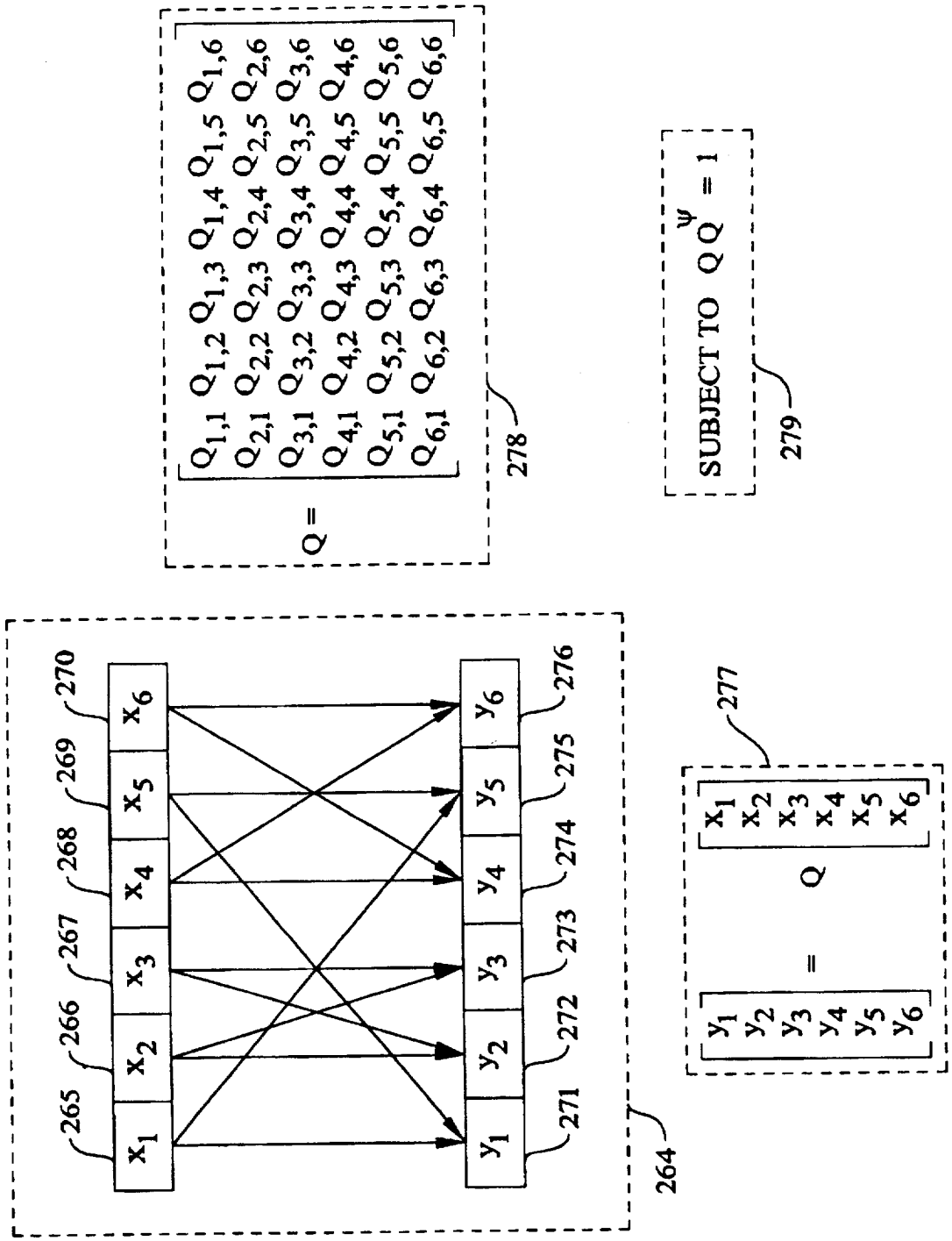


FIG. 13

Copy provided by PTCS from the PTO APS Image Data Base on 08/28/1998

# SPREAD SPECTRUM MODULATION USING TIME VARYING LINEAR FILTERING

## BACKGROUND OF THE INVENTION

The present invention relates to spread spectrum modulation of radio frequency signals, and more particularly, to spread spectrum modulation using time varying filtering.

Time varying linear filtering is a very general technique which can generate a broad class of spread spectrum signals. As a spread spectrum technique, it admits a broader class of waveforms than are commonly used today, which may give rise to performance benefits in several areas of application, including Anti-jam communications, Low Probability of Intercept communications, and Code Division Multiple Access communications. Spread spectrum RF modulation is a technique for radio communications which involves generating radio frequency waveforms which cover a broad frequency band in the RF spectrum. Spread spectrum modulation of a radio signal makes the transmission of such signals harder to jam, and also allows many transmissions to be sent within the same band, where they overlap in frequency, but are distinguished by different spreading codes.

Direct sequence spread spectrum modulation involves multiplying a data signal by a pseudorandom binary-valued or multi-phase-valued time function. The result is modulated on the RF carrier by multiplying the signal by the carrier waveform. Frequency hopped spread spectrum involves jumping the carrier frequency around in a pseudorandom way. These are the two principal methods of spread spectrum modulation, which are special cases of time varying filtering. Both these methods provide resistance to jamming. Both provide a way for many transmissions to occupy the same band in a way other than assigning a specific narrow frequency allocation to each transmission.

Time varying filtering is applicable to other signal processing tasks unrelated to spread spectrum modulation. In order for the waveform produced by a time varying filter to be suitable for spread spectrum modulation, the impulse response of the time varying filter (hereinafter "TVF") must vary at a rate orders of magnitude greater that the input signal bandwidth. Let $h(s, t')$ represent the time-varying impulse response of the TVF, where $t'$ is the input time variable and $s=t-t'$ is the difference time variable, where $t$ is the output time variable. The variation of the TVF must be rapid in two respects: First, at two closely spaced values of the input time variable, $t'=t_1'$ and $t'=t_2'$, respectively, the TVF's instantaneous impulse responses, $h(s, t_1')$ and $h(s, t_2')$ respectively, should be quite different for as least some values of the difference time variable, s. Second, each impulse response $h(s,t')$, should be a rapidly fluctuating function of the difference time variable s.

Both forms of rapid variation are necessary (although not sufficient); without either one, the rapid variation introduced by the other will be smeared out and little if any spreading will be effected.

A need exists for better forms of covert radio transmission that an adversary would find difficult to intercept; transmissions having this property are called Low Probability of Intercept (LPI) transmissions. Mathematical analysis has shown that jointly gaussian random processes can make good LPI waveforms. Time-varying filters can generate waveforms which appear like jointly gaussian processes because of two factors: the potential of the filters' impulse responses to assume values from a continuum, and the capability of the filters to have very long impulse responses so that the effects of many data samples overlap in time.



A need exists for better protection of radio transmissions from noise and jamming. The direct sequence and frequency hopped spread spectrum methods spread the data in frequency but not in time, and therefore can provide significant protection from a jammer that concentrates its power at specific frequencies, but not from a pulsed jammer (i.e., a jammer that concentrates its power within specific time intervals). For this reason, error-correcting coding and interleaving are often used as supplementary protection against a pulsed jammer. To increase the protection, several error-correcting codes may be layered, but this introduces inefficiency and increases the complexity of decoding. Chips may be interleaved to improve resistance to a pulsed jammer, but this makes the design of an LPI waveform difficult.

A need exists for radio transmissions that are limited to specific bands. Most radio transmissions exhibit a gradual decay in strength at the edge of the frequency band. One may employ aggressive filtering to produce a sharp cutoff at the edge of the band, but this introduces distortions which impair reception because the receiver is not matched to the altered waveforms.

A need exists to shape the spectrum of radio transmissions to conform to certain requirements, such as to avoid certain frequency bands. TVF spread spectrum provides more degrees of freedom than other methods to shape the spectrum of transmissions.

A further need exist for better multiple access spread spectrum systems to accommodate more users.

## SUMMARY OF THE INVENTION

A method for transmitting information by radio over a wide bandwidth comprises the steps of: inputting a data signal into a time varying filter modulator; spreading the data signal in time and in frequency to produce a wideband signal; modulating the wideband signal onto an RF carrier to provide an RF output signal; and transmitting the RF output signal. The step of spreading includes performing a series of linear transformations to the data signal.

An advantage of the present invention is that it employs TVF spread spectrum techniques, using data spread in time as well as in frequency, to provide a built-in level of resistance to pulsed jamming, reducing the need for additional protection.

Another advantage of the invention is that it enables TVF transmissions having a sharp cutoff at the edge of the frequency band.

These and other advantages of the invention will become more apparent upon review of the Specification, claims, and drawings.

## BRIEF DESCRIPTION OF THE DRAWINGS

FIG. 1 is a block diagram of a spread spectrum transmitting system embodying various features of the present invention.

FIG. 2 is a block diagram of a spread spectrum receiving system embodying various features of the present invention.

FIG. 3 is a block diagram of the TVF transmitting system of FIG. 1.

FIGS. 4 and 5 illustrate the operation of the digital TVF modulator of FIG. 3.

FIG. 6 is a block diagram of the A-D demodulator of FIG. 9.

FIGS. 7 and 8 illustrate the operation of the digital TVF demodulator of FIG. 6.

Copy provided by PTCS from the PTO APS Image Data Base on 08/28/1998

FIG. 9 is a block diagram of the TVF Receiving System of FIG. 2.

FIG. 10 illustrates a sampler which converts a continuous-time complex valued analog signal to a sequence of complex samples.

FIG. 11 illustrates an example of a transformation unit A or B composed of unitary transformations.

FIG. 12 illustrates a general 2×2 unitary transformation where each arrow represents multiplication by a complex coefficient.

FIG. 13 illustrates a general 6×6 unitary transformation in the form of a matrix.

Throughout the several views, like components are referenced with like references.

## DESCRIPTION OF THE PREFERRED EMBODIMENT

Referring to FIG. 1, there is an overview of a spread spectrum transmitting system 10. Input signal 9 is a message signal that is to be sent and comprises a real part 12 and an imaginary part 13. The parts 12 and 13 are provided to a time varying filter (TVF) transmitting system 14, and are generally in the form of binary data (for example, +1, −1 values only) or analog samples. In the case where the input signal 9 is a sequence of analog samples, it may have been produced by the sampler 4 shown in FIG. 10 from a continuous-time analog sequence 5 comprised of real part 6 and imaginary part 7. The analog samples 9 may be real or complex. If real, the value of part 13 is zero. A seed 201 to be used for initializing the pseudorandom number generators 57 and 160 (which are shown in FIGS. 4 and 7 and discussed further herein) is entered into TVF transmitting system 14, and into spread spectrum receiving system 11 shown in FIG. 2. The purpose of seed 201 is to provide the same initialization for each pseudorandom number generator 57 and 160.

Referring to FIG. 1, a clock 18 generates two signals 21 and 22 which are provided to TVF transmitting system 14. Clock signal 21 comprises a sequence of pulses used to trigger internal operations of the blocks comprising the system. Clock signal 22 provides a precise numerical indication of the time incremented at least once for each pulse. The output of TVF transmitting system 14 is a radio frequency (RF) signal 15 which is fed to transmitting antenna 20 via diplexer 30 and transmitted as radio waves.

Still referring to FIG. 1, a conventional direct sequence spread spectrum transmitting system 16 enables the receiving system 11 to acquire synchronization of timing and RF frequency. The clock signals 21 and 22 are fed into the direct sequence spread spectrum transmitting system 16 to direct it to produce a spread spectrum waveform 29 that is synchronized with 15. The RF waveforms 15 and 29 are combined by diplexer 3 to form RF signal 30. RF signal 30 transmitted by antenna 20 as radio waves, in order to communicate message sequence 9 to spread spectrum receiving system 11.

Referring to FIG. 10, there is shown a sampler 4 which converts a continuous-time complex valued analog message signal 5 to a sequence of complex samples 9. Signal 5 is composed of real part 6 and imaginary part 7. Sequence 9 is composed of real part 12 and imaginary part 13. The sampler 8 produces samples of 6 and 7 at a uniform rate in synchronism with the pulses of clock signal 21 but at a submultiple of the rate of the pulses of clock signal 21. The sampling rate is preferably at least as fast as the Nyquist rate, determined by the frequency content of the complex signal 5, to enable the signal 5 to reconstructed from the samples 9 without loss of quality. Clock signal 22 provides the time and is used by 8 to determine when to sample 6 and 7. The samples are output as 12 and 13. The analog signal 5 may be real or complex. If real, the value of part 7 is zero and the value of part 13 is zero.

Referring to FIG. 2, there is shown a spread spectrum receiving system 11 comprising an antenna 23, a TVF receiving system 24, and an auxiliary direct sequence spread spectrum receiving system 26. The purpose of spread spectrum receiving system 11 is to produce a replica 137 of input message sequence 9. The sequence of samples 137 is output by the spread spectrum receiving system 11 as the receiver output. The real part 135 of replica 137 is a replica of the real part 12 of input message sequence 9, and the imaginary part 136 of replica 137 is a replica of the imaginary part 13 of input message sequence 9. A radio frequency signal 25 gathered by antenna 23 is provided as an input to the TVF receiving system 24 and also to the conventional direct sequence spread spectrum receiving system 26. System 26 acquires synchronization to the timing and RF frequency of the portion of radio signal 25 generated by the direct sequence spread spectrum transmitting system 16. System 26 also sends timing information signals 27 and a RF carrier 28 to the TVF receiving system 24 to enable the TVF receiving system 24 to acquire synchronization of the timing and RF frequency of the portion of the radio signal 25 generated by TVF transmitting system 14. Once the TVF receiving system 24 has been synchronized, the transmitting system 16 and receiving system 26 can be turned off. If the TVF receiving system 24 loses synchronization, the direct sequence spread spectrum transmitting system 16 and direct sequence spread spectrum receiving system 26 may preferably be reactivated and used to enable the TVF receiving system 24 to reacquire synchronization.

The TVF transmitting system 14 is described in detail with reference to FIG. 3. It should be noted that the TVF transmitting system 14 is well known by those skilled in the art, except for the digital TVF modulator 31, described further herein.

Referring to FIG. 3, input sequences 12 and 13, as well as clock signals 21 and 22, are provided as inputs to digital TVF modulator 31. Digital TVF modulator 31 provides a sequence of complex sample sequences comprised of real sequence 41 and imaginary sequence 42 at a fast (spread) rate which is faster than the rate at which the input sequences 12 and 13 are received by the digital TVF modulator 31. Sequence 41 represents a real value (in-phase component) and sequence 42 represents an imaginary value (quadrature component). Each of sequences 41 and 42 is sent to a digital-to-analog converters 32 and 33, respectively, to produce analog sequences 43 and 44, respectively. Analog sequences 43 and 44 are sent to smoothing filters 34 and 35, respectively, to produce continuous-time analog signals 45 and 46, respectively. An RF oscillator 40 generates a first sinusoidal carrier waveform signal 47 that is sent to a 90-degree phase shifter 39, which generates a second sinusoidal carrier waveform signal 48 whose phase differs from the phase of 47 by 90 degrees. Carrier waveform signals 47 and 48 are fed into multipliers 36 and 37, respectively, along with signals 45 and 46, respectively, to produce output signals 49 and 50, respectively. Signals 49 and 50 are added by summer 38 to produce the RF output signal 15.

Referring to FIG. 4, there is shown a digital TVF modulator 31 which performs a time-varying filter modulation on a slowly varying complex-valued message sequence 9 which is composed of real sequence 12 and imaginary sequence 13.

Copy provided by PTCS from the PTO APS Image Data Base on 08/28/1998

Digital TVF modulator **31** produces a rapidly varying spread sequence **58** which is composed of real sequence **41** and imaginary sequence **42**. The following description is provided by way of example only. It is to be understood that the invention may include any number of shift registers comprised of any number of cells to suit the requirements of a particular application. Shift register **51** consists of three cells, cells **51***a*, **51***b*, and **51***c*. By way of example to illustrate the invention, shift register **52** consists of six cells, cells **52***a* through **52***f*. By way of example to illustrate the invention, shift register **54** consists of nine cells, cells **54***a* through **54***i*. By way of example to illustrate the invention, shift register **56** consists of six cells, cells **56***a* through **56***f*. Each of the cells of registers **51**, **52**, **54**, and **56** is capable of holding a complex number. At the commencement of the initial input of input sequence **9** to digital TVF modulator **31**, the values in cells **54***g*, **54***h*, and **54***i* are set to zero.

Clock signal **21**, consisting of a sequence of pulses, is provided to shift registers **51**, **52**, **54**, and **56** and to transformation stages **53** and **55**, as well as to pseudorandom number generator **57**. For clarity, not all connections of clock signal **21** are shown.

Referring to FIG. **4**, input message sequence **9** is processed according to the following description. Elements of complex digital sequence **9** are shifted into shift register **51**, which comprises registers **51***a* through **51***c*. By way of example, three samples $x_1$, $x_2$, and $X_3$ from **9** are shifted into shift register **51**, with $x_1$ placed in cell **51***c*, $x_2$ placed in cell **51***b*, and $x_3$ placed in cell **51***a*. The numbering of the first sample from input message sequence **9** used in this example as $x_1$ is arbitrary; the sample labeled as $x_1$ need not be the first sample of the input sequence **9**. Register **52** has a number L times as many cells as register **51**; by way of example to illustrate the invention, the number L is 2, and register **52** has six cells, designated **52***a* through **52***f*. The contents of the cells of register **51** are copied into the cells of register **52**, in such a way that the contents of each cell of register **51** are written into a number L of cells of register **52**. In this example, cell **51***a* is copied into both cells **52***a* and **52***b*, cell **51***b* is copied into both cells **52***c* and **52***d*, and cell **51***c* is copied into both cells **52***e* and **52***f*.

Referring to FIG. **4**, the pseudorandom number generator **57** creates two sets of pseudorandom complex-valued coefficients **211** and **212** and places coefficients **211** in transformation stage A **53** and coefficients **212** in transformation stage B **55**. It is an important part of the invention that a new set of coefficients is created by pseudorandom number generator **57** which are loaded into **53** and **55** to perform a different mathematical transformation in transformation stage A **53** on each new set of samples in the cells of register **52**, and a different mathematical transformation in transformation stage B **55** on each new set of samples in the cells of register **54**. The pseudorandom number generator **57** is designed so that the coefficients **211** and **212** produced by pseudorandom number generator **57** are the result of a deterministic mathematical function of exactly two numbers: 1) a fixed seed **201** which in normal operation is provided by the operator to both spread spectrum transmitting system **10** and spread spectrum receiving system **11** before the start of operation, and 2) the clock signal **22** which provides a precise numerical indication of the time. The contents of shift register **52** are provided to transformation stage A **53** and the result is placed in cells **54***a* through **54***f* of shift register **54**. The inputs to transformation stage B **55** consist of the contents of cells **54***d* through **54***f*, which come directly from transformation stage A **53**, and the contents of cells **54***g* through **54***i*, which are carried over from prior processing of input message sequence **9**. Cells **54***d* through **54***i* of shift register **54** are provided to transformation stage B **55**, and the result is placed in cells **56***a* through **56***f* of shift register **56**. Shift register **54** is shifted six units to the right, so that the contents of the six rightmost cells **54***d* through **54***i* are discarded, and the contents $v_6$ through $v_4$ of cells **54***a* through **54***c* are placed in cells **54***g* through **54***i*, respectively. The output sequence consisting of real component **41** and imaginary component **42** is provided by shift register **56**.

Referring now to FIG. **5**, there is shown an example of the operation of digital TVF modulator **31** after one shift has occurred from the status of digital TVF modulator **31** shown in FIG. **4**. A comparison between FIGS. **4** and **5** shows how the numbers have been shifted and altered by the various shifts and transformations.

Referring to FIG. **7**, there is shown a digital TVF demodulator **67** which performs a time-varying filter demodulation on a complex-valued input sequence of digital samples **76** which is composed of real sequence **70** and imaginary sequence **71**. The output of **67** is a despread sequence of complex-valued digital samples **166** which is composed of real sequence **164** and imaginary sequence **165**.

By way of example to illustrate the invention, shift register **151** consists of six cells, cells **151***a* through **151***f*. By way of example to illustrate the invention, shift register **153** consists of nine cells, cells **153***a* through **153***i*. By way of example to illustrate the invention, shift register **155** consists of six cells, cells **155***a* through **155***f*. By way of example to illustrate the invention, shift register **159** consists of three cells, cells **159***a* through **159***c*.

Clock signal **72**, consisting of a sequence of pulses, is provided to shift registers **151**, **153**, **155**, and **159** and to transformation stages **152** and **154**, as well as to pseudorandom number generator **160**. For clarity, not all connections of clock signals **72** are shown.

The operation of digital TVF demodulator **67** processes signal **76** in accordance with the following steps. At the commencement of the initial input of input sequence **76** to the digital TVF demodulator **67**, values in cells **153***g*, **153***h*, and **153***i* are set to zero.

Elements of complex digital sequence **76** are shifted into shift register **151**, which comprises cells **151***a* through **151***f*. By way of example, six samples from **76** are shifted into **151**. The pseudorandom number generator **160** creates two sets of pseudorandom complex-valued coefficients, **214** and **213**, resp., which prescribe the mathematical inverse of each transformation in transformation stage A **53** and the mathematical inverse of each transformation in transformation stage B **55**, respectively; and **160** places such sets of coefficients **214** and **213** into inverse transformation stage A **154** and inverse transformation stage B **152**, resp., in time correspondence such that the application of each inverse transformation in **154** and **152** reverses the effect of the corresponding transformation in **53** and **55**, respectively.

The coefficients **213** and **214** produced by the pseudorandom number generator **160** are the result of a deterministic mathematical function of exactly two numbers: 1) a fixed seed **201** which in normal operation is provided by the operator to both spread spectrum transmitting system **10** and spread spectrum receiving system **11** before the start of operation, and 2) the clock signal **73** representing a precise numerical indication of the time. The contents of shift register **151** are provided to inverse transformation stage B **152** and the result is placed in cells **153***a* through **153***f* of shift register **153**. The inputs to inverse transformation stage

Copy provided by PTCS from the PTO APS Image Data Base on 08/28/1998

A 154 consist of the contents of cells 153*d* through 153*f*, which come directly from inverse transformation stage B 152, and the contents of cells 153*g* through 153*i*, which are carried over from prior processing of input sequence 76. Cells 153*d* through 153*i* of shift register 153 are provided to inverse transformation stage A 154, and the result is placed in cells 155*a* through 155*f* of shift register 155. The values in cells 155*a* and 155*b* of shift register 155 are averaged by averager 156, and the result is placed into register 159*a* of shift register 159. The values in cells 155*c* and 155*d* of shift register 155 are averaged by averager 157, and the result is placed into register 159*b* of shift register 159. The values in cells 155*e* and 155*f* of shift register 155 are averaged by averager 158, and the result is placed into register 159*b* of shift register 159. Shift register 153 is shifted six units to the right, so that the contents of the six rightmost cells 153*d* through 153*i* are discarded, and the contents of cells 153*a* through 153*c* are placed in cells 153*g* through 153*i*, respectively. The output sequence 78 is provided by shift register 159.

Referring now to FIG. 8, there is shown an example of the operation of digital TVF demodulator 67 after one shift has occured from the status of digital TVF modulator 67 shown in FIG. 7. A comparison between FIGS. 7 and 8 shows how the numbers have been shifted and altered by the various shifts and transformations.

Referring to FIG. 6, there is shown an A-D demodulator 86 that provides analog-to-digital conversion and TVF demodulation functions. The A-D demodulator 86 samples the two analog input signals, in-phase component 61 and quadrature component 62 of 77, using samplers 63 and 64, respectively, to produce discrete-time analog signals 68 and 69. Then 86 uses analog-to-digital converters 65 and 66, respectively, under control of clock signals 72 and 73, to generate discrete-time digital signals 70 and 71, respectively. Signals 70 and 71 are fed into a digital TVF demodulator 67, which performs the time-varying filter spread spectrum demodulation, and provides real component 74 and complex component 75 of complex digital samples 78 as output.

Referring to FIG. 9, TVF receiving system 24 is almost an entire receiver for time-varying filter spread spectrum. However, the TVF receiving system 24 does not provide the function of acquisition of synchronization, which is accomplished by direct sequence spread spectrum receiving system 26. One of the important functions of TVF receiving system 24 is tracking of synchronization. The phrase "tracking of synchronization" means that once TVF receiving system 24 is locked in synchronism with the timing and frequency of the incoming signal 25, TVF receiving system 24 should maintain synchronism.

Still referring to FIG. 9, an RF signal 25 provided by receiving antenna 23 of FIG. 2 is amplified by preamp 81, a preamplifier. The RF signal 82 provided by preamp 81 is fed to mixers 83, 84, and 85, each of which produces "in-phase" and "quadrature" outputs. In FIG. 9, the abbreviation "i" is used for "in-phase" and the abbreviation "Q" is used for "quadrature". The "in-phase" and "quadrature" outputs of mixer 83 are 89 and 90, resp.; the "in-phase" and "quadrature" outputs of mixer 84 are 123 and 124, resp.; and the "in-phase" and "quadrature" outputs of mixer 84 are 125 and 126, resp.

The outputs 89 and 90 of mixer 83 are fed to an early-late gate loop, which we designate loop L1, the purpose of which is to track code timing of the incoming RF signal 25. Early-late gate loop L1 includes A-D demodulators 86, 87, and 88; digital filter and square law device units 91 and 92; summer 93; loop filters unit 94; clock 95; and delay units 96 and 97. Early-late gate loop L1 is conventional except for A-D demodulators 86, 87, and 88. A-D demodulators 87 and 88 are exact replicas of A-D demodulator 86 depicted in FIG. 6. Signal components 89 and 90 are fed into three A-D demodulators 86, 87, and 88, whose timings are referenced as "Early", "Punctual", and "Late", respectively. Such timings are produced by delaying the output signals 99 and 100 of clock 95 using delay units 96 and 97 which produce a small delay. The small delay period is selected as a matter of design choice using known techniques for designing early-late gate loops. Clock 95 produces a sequence of pulses 99, and a time signal 100.

The in-phase and quadrature output signals 105 and 106, respectively of A-D demodulator 86 are provided to digital filter and square law device 91, which produces discrete-time sample sequence 111, representing a measure of the power output of A-D demodulator 86. The in-phase and quadrature outputs 109 and 110, respectively, of A-D demodulator 88 are sent to digital filter and square law device 92, which produces discrete-time sample sequence 112, representing the power output of A-D demodulator 88. It is to be noted that the power output of each of A-D demodulators 86, 87, and 88 correlates with how closely the timing of that A-D demodulator is matched to the code timing of the incoming signal 25. Summer 93 generates a sample sequence 113, representing the difference of between signals 112 and 111. Sample sequence 113 then is provided as an input to loop filters 94. The output of loop filters 94 that is relevant to tracking of timing synchronization is 114. Signal 114 controls clock 95, causing 95 to speed up or slow down to correct mismatches in the timing of A-D demodulators 86, 88 relative to incoming signal 25.

Frequency tracking of local RF oscillator 115 relative to the incoming signal 25 is accomplished by means of a loop, which we designate L2, comprising the following components: local RF oscillator 115; mixers 84 and 85; phase retarder 116; phase advancer 117; A-D demodulators 118 and 119; digital filter and square law device units 120 and 121; summer 122; and loop filters 94. A-D demodulators 118 and 119 are exact replicas of A-D demodulator 86 depicted in FIG. 6.

The output signal 298 of local RF oscillator 115 is provided to phase retarder 116, which produces a phase retarded signal 202, and phase advancer 117, which produces a phase advanced signal 203. Signal 202 is mixed with 82 in mixer 84 to produce in-phase 123 and quadrature 124 outputs. Signal 203 is mixed with 82 in mixer 85 to produce in-phase 125 and quadrature 126 outputs. Signals 123 and 124 are fed into A-D demodulator 118, the output of which are digital sample sequences 127 and 128 as in-phase and quadrature components, resp. Signals 125 and 126 are fed into A-D demodulator 119, the output of which are digital sample sequences 129 and 130 as in-phase and quadrature components, resp. Sample sequences 127 and 128 are fed into digital filter and square law device 120, the output of which, 131, is fed subtractively into summer 122. Sample sequences 129 and 130 are fed into digital filter and square law device 121, the output of which, 132, is fed additively into summer 122. The output of summer 122 is fed into loop filters 94. The output 134 of loop filters 94 controls the frequency of local oscillator 115.

The demodulated output 135 and 136 of TVF receiving system 24 is produced by A-D demodulator 87, the "punctual" A-D demodulator, in conjunction with phase adjustment and digital filter 98. The outputs of 87 are in-phase

Copy provided by PTCS from the PTO APS Image Data Base on 08/28/1998

sample sequence **107** and quadrature sample sequence **108**. Sequences **107** and **108** are provided as inputs to phase adjustment and digital filter unit **98**. Phase adjustment and digital filter unit **98** removes a possible arbitrary phase component, which may be constant or monotonically varying, from the complex sequence **204** consisting of incoming sequence **107** as real part and incoming sequence **108** as imaginary part. Removal of an arbitrary phase component is accomplished using known properties of the message signal **9**, as for example, whether the signal **9** is real or binary, or whether **9** consists of samples from a predetermined constellation set of complex values, each value having an amplitude and phase. Following the phase adjustment, the digital filter operation of **98** may be used to compensate for inaccuracies in **14** and **24**, such as inaccuracies in spectral power distribution. The output of TVF receiving system **24** includes an in-phase component sequence **135** and a quadrature component sequence **136**.

Referring to FIG. **11**, there is shown a transformation stage **263**, which may be used for **53** and **55** in FIG. **4** and FIG. **5**, and **152** and **154** in FIG. **7** and FIG. **8**. By way of example to illustrate a transformation stage, transformation stage **263** maps six input cells to six output cells. The input cells to transformation **263** are **251** through **256**; the output cells of transformation **263** are **257** through **262**. Transformation stage **263** is composed of the following three independent unitary transformations of the form **240** shown in FIG. **12**, which (as a significant part of the invention) may be performed in parallel to effect a savings of the time needed for computation: the unitary transformation consisting of input cells **251** and **255** and output cells **257** and **261** and the four links which map from input cells **251** and **255** to output cells **257** and **261**; the unitary transformation consisting of input cells **252** and **253** and output cells **258** and **259** and the four links which map from input cells **252** and **253** to output cells **258** and **259**; and the unitary transformation consisting of input cells **254** and **256** and output cells **260** and **262** and the four links which map from input cells **254** and **256** to output cells **260** and **262**.

Referring to FIG. **12**, there is shown a 2×2 ("two by two") unitary transformation unit **240**. The unit **240** is composed of four cells numbered **241**, **242**, **243**, and **244**, and four links, numbered **245**, **246**, **247**, and **248**, where each link represents a complex multiplication. The complex numbers which are inputs to the transformation unit **240** are placed in cells **241** and **242**. The complex numbers which are output results of the transformation unit **240** are placed in cells **243** and **244** by the calculations to be described. The complex result placed in cell **243** is formed as the sum of two products: the product of complex input value **241** with the complex multiplication factor $Q_{1,1}$ designated on link **245**, and the product of complex input value **242** with the complex multiplication factor $Q_{1,2}$ designated on link **247**. The complex result placed in cell **244** is formed as the sum of two products: the product of complex input value **241** with the complex multiplication factor $Q_{2,1}$ designated on link **246**, and the product of complex input value **242** with the complex multiplication factor $Q_{2,2}$ designated on link **248**. The values of the complex multiplicative factors designated on the links **245** through **248** are calculated by the transformation unit **240** on the basis of formulas **249** and **250** of FIG. **12**, from pseudorandom real values for variables $\alpha$, $\beta$, $\gamma$, and $\theta$ provided by pseudorandom number generator **57** or **160**. The variable **6** is calculated by means of formula **250** and substituted into formula **249**.

Referring to FIG. **13**, there is shown a transformation stage **264**, which may be used for **53** and **55** in FIG. **4** and FIG. **5**, and **152** and **154** in FIG. **7** and FIG. **8**. Transformation stage **264** is composed of a unitary 6×6 (six by six) matrix. Output cells $y_1$ through $y_6$ are determined from input cells $x_1$ through $x_6$, resp., by means of equation **277** utilizing matrix Q **278**, which matrix Q **278** is subject to the mathematical unitary condition **279**, where the symbol "t" means "complex conjugate transpose".

The number L, which is the ratio of the sample rate of sequence **58** to the sample rate of sequence **9**, is a measure of the extent of frequency spreading accomplished by digital TVF modulator **31**, where L is a positive integer. For purposes of illustration, the TVF transmitting system **14** and TVF receiving system **24** have been described with a value L equal to 2. Values of L in the range 50 to 1000 would be most useful.

An alternate method of designing a time varying filter spread spectrum system is by interspersing a number L-1 of zeros between each pair of samples of the message sequence, and using the resulting sequence as the input to a transversal filter F1 of conventional design whose filter tap coefficients would be time-varying under the control of a pseudorandom number generator R1. The transversal filter F1 and pseudorandom number generator R1 would be substituted for digital TVF modulator **31** in TVF transmitting system **14**. In TVF receiving system **24**, a filter F2 would be substituted for digital TVF demodulator **67** which is designed to be a matched filter to F1 at each instant that F2 processes a signal produced by F1.

A second alternate method of implementing a time varying filter spread spectrum system is by interspersing a number L-1 of zeros between each pair of samples of the message sequence, and using the result as the input to a transversal filter F1 of conventional design whose filter tap coefficients are fixed. The transversal filter F1 would be substituted for digital TVF modulator **31** in TVF transmitting system **14**. In TVF receiving system **24**, a conventional fixed filter F2, matched to F1, would be substituted for digital TVF demodulator **67**.

Although the invention has been described with reference to specific embodiments, numerous variations and modifications of the invention may become readily apparent to those skilled in the art in light of the above teachings. An alternate form of time-varying filter for spread spectrum modulation may be implemented using a transversal filter with time-varying coefficients. Demodulation may be effected by means of a matched filter form of transversal filter with time-varying coefficients. Therefore, it is to be understood that the invention may be practiced other than as specifically described.

I claim:

**1**. A method for transmitting information by radio over a wide bandwidth, comprising the steps of:

1) inputting a data signal into a time varying filter modulator;

2) spreading the data signal in time and in frequency to produce a wideband signal;

3) modulating the wideband signal onto an RF carrier to provide an RF output signal; and

4) transmitting the RF output signal.

**2**. The method of claim **1** wherein step (2) includes performing a series of linear transformations on the data signal.

* * * * *

Copy provided by PTCS from the PTO APS Image Data Base on 08/28/1998