Serial Number 09/157,297

Filing Date 18 September 1998

Inventor Harry F. Francis
Thomas F. Cocke, IV
Gary S. Calvert, II
Roland H. Mattoon
Timothy Y. Gorder
Neil E. Moody
Gair D. Brown

NOTICE

The above identified patent application is available for licensing. Requests for information should be addressed to:

OFFICE OF NAVAL RESEARCH
DEPARTMENT OF THE NAVY
CODE OOCC
ARLINGTON VA 22217-5660

19981202 016

DISTRIBUTION STATEMENT A
Approved for public release;
Distribution Unlimited

DTIC QUALITY INSPECTED 3

NC 78352

MULTI-INTERFACE POINT-TO-POINT SWITCHING SYSTEM (MIPPSS)

BACKGROUND OF THE INVENTION

1. Field of the Invention

The present invention relates generally to switching systems. More specifically, the present invention relates to a switching system which provides the ability to interconnect a large number of electronic components in a manner which allows the components to function as if they were physically wired together using virtually any type of data transfer protocol while exhibiting low latency (achieving a total data transfer delay close to the that which would have been achieved in a direct-wired configuration), timing consistency (achieving a latency which is deterministic and predictable), and high signal fidelity (not adding to, deleting from, or altering the signal in any way).

2. Glossary

Before beginning a discussion of either the related art or the preferred embodiments according to the present invention, it should be mentioned that the inventors have opted to employ the following terms throughout the specification. A glossary of these terms are set out immediately below.

Blocking - Blocking refers to a condition wherein a connection is refused even though there are free input and output channels.

Contention - refers to an attempt to connect an input port to an output port which is already in use.

Data Transfer Protocol Insensitive - Data transfer protocol insensitive functional behavior refers to the ability to of the switching system to handle virtually any type of data transfer protocol, i.e., any device can be connected to any other device that uses that same data transfer protocol, without

adding to, deleting from, altering, or responding to the transfer protocol in any way. From the discussion immediately above, it will be appreciated that neither the origin nor the destination of any signal is determined by analyzing the associated header or the data content of the signal; switching is completely content-independent or message-independent.

Deliver - Deliver, as used hereinafter, is employed to connote that any specification-compliant signal received is switched and "delivered" as a corresponding specification-compliant output signal. "Delivered" is understood to be broad enough to encompass the general process wherein the input signal, once recognized as a valid signal, is converted into one or more other signal formats as it is handled within the switch, so long as the final output signal "delivered" by the MIPPSS is specification-compliant in its original format.

Distributed System - Distributed system refers to the switching system design wherein each switching unit has the capability of servicing multiple locations, and no single location must house the entire switch. It will be appreciated that this reduces need for costly modifications or additions to facilities to accommodate switching equipment.

Hot-Swapping - Hot- swapping capability refers to the ability to perform on-line replacement of line-replaceable units, i.e., the switching system remains operable overall while discrete, inoperable elements are replaced.

Low Latency- Low latency refers to the ability of the switching system to achieve a total data transfer delay close to the that which would have been achieved in a direct-wired configuration.

Multi-Interface - Multi-Interface functional behavior refers to the ability to handle virtually any type of data transfer protocol, i.e., any device can be connected to any other device that uses that same data transfer protocol.

NTDS - Naval Tactical Data System (NTDS) refers to the Navy's specific implementation of the Military Standard Document entitled "Input/Output Interfaces, Standard Digital Data, Navy Systems," commonly referred to as MIL-STD-1397 (NAVY). The standard describes interface classifications (Types) and categories of NTDS interfaces, the latter being parallel interfaces, serial interfaces, and other interfaces. For specific information of each NTDS signal type, refer to MIL-STD-1397 (NAVY), the latest version of which, MIL-STD-1397C, is available from the Naval Publications and Forms Center, Philadelphia, PA, or at http://www.dodssp.daps.mil. MIL-STD-1397 is incorporated herein by reference.

Point-to-Multipoint - Point-to-multipoint functional behavior refers to the ability by which a single data generating device (root node) communicates with a plurality of data receiving devices (leaf nodes). In nodal notation, traffic on the switching system is generated by the root node and received by all of the leaf nodes. Moreover, the switching system does not reserve bandwidth for traffic from any of the leaf nodes toward the root node and the leaf nodes cannot communicate with one another through the point-to-multipoint connection. A switching system capable of point-to-multipoint connections is said to include a broadcast capability.

Point-to-Point - Point-to-point functional behavior generally refers to the ability to connect devices which are required to communicate with one another on a one-to-one basis.

Signal Fidelity - Signal fidelity refers to the ability to replicate the input signal at the output port. High signal fidelity denotes that the signal is delivered without adding to, deleting from, or altering the signal in any way.

Switch Fabric - The components with a switching system that provides paths for the connections. In the discussion which follows, two distinct types of switch fabrics will be considered. The first type is multi-layer switch fabric, where the switch fabric is arranged in layers, i.e., discrete switch enclosures, according to the signal format the individual layers are designed to receive and/or

output. The second type is mixed-layer switch fabric, wherein multiple signal formats are received and/or output by a single switch layer, e.g., a single switch enclosure.

Timing Consistency -Timing consistency refers to the ability of the switching system to achieve a latency which is deterministic and predictable. See low latency.

Transparency - Transparent functional behavior refers to the ability to deliver a signal without interaction with the interface protocol corresponding to that signal. Thus, an interface-compliant input signal bit arriving at an input terminal is output as an interface-compliant signal bit, irrespective of whether the bit is a control bit or a data bit. This characteristic is critical when the switch serves to connect objects which are themselves under test, allowing research and testing without introducing additional possible sources of errors due to switching.

3. Brief Discussion of Related Art

The primary utility of MIPPSS is in transparently switching signals between and among components which may not have been originally designed to be switched. The signals can be of virtually any data type (communications, images, sensor data, accounting records) and can be used for any scientific, commercial, or military purpose. See Fig. 1.

The discussion immediately below provides a review of basic digital communications. In addition, the discussion outlines the need for switching, current methods and apparatus used to perform switching, and the principal limitations and disadvantages of these methods. Several solutions to the overall switching problem solved by MIPPSS are also discussed.

Digital equipment communicates by sending digital signals, which are composed of binary digits, or *bits*. Each bit represents either a 1 (one) or a 0 (zero). Fig. 2 shows a representative bit expressed as a deflection from a baseline over a period of time. By convention, most upward deflections are signed positive. The presence of a 1 or a 0 is interpreted according to an agreed-upon encoding technique, as described in greater detail below, but it should be noted here that the presence

of a 1 or a 0 may be denoted by positive or negative deflections, positive or negative transitions, or simply by the presence or absence of a transition. Digital signaling is generally superior to analog information transfer because it is capable of very accurate transmission over great distances.

It will be appreciated that the bit is signaled in a digital circuit by varying voltages. The most common digital logic, transistor-transistor logic (TTL), uses +0.5 volts nominal for a low signal and +5 volts nominal for a high signal. A faster logic, emitter-coupled logic (ECL), uses -1.75 volts nominal for low and -0.9 volts nominal for high. Positive Emitter-Coupled Logic (PECL) uses nominal +3.0 volts for low and +4.0 volts for high.

It should be mentioned here that when the signal needs to be transmitted over a distance, a device called a driver receives the digital logic input, adds energy, and produces a current sufficient to transmit the signal. However, regardless of the propagation distance, it is important to note that the shape of the signal bit may vary in terms of its overall amplitude, duration, and direction of deflection (polarity). The allowable limits on the exact shape of signal bits are precisely defined in interface specifications. This precise definition helps to ensure that noise is not interpreted as data.

The transmission of digital data from one machine to another must ensure that the data is received unambiguously and accurately. Various encoding techniques are used depending on the requirements of the interface (distance, timing, environment, etc.). Some common forms of encoding are illustrated in Fig. 3 and include:

a. Return to Zero (RZ). A simple approach to digital communication might prescribe an upward deflection to signal the presence of a 1 bit, and the absence of this deflection to signal a 0 bit (Figure 3(a)). In this case it takes an entire time interval, or *bit period* (shown as the horizontal distance between the vertical grid lines) to signal a 0, not simply the return to baseline which occurs following each 1 bit. This interpretation requires some type of timing signal to coordinate bit periods between different equipment.

b. Non-Return-to-Zero (NRZ). In Figure 3(b), a continuous signal might transmit at either one level or another throughout each time interval, eliminating the need for a return to baseline within each interval. Again, some form of time synchronization is required.

c. Manchester. An improvement to these signaling schemes uses just a down-shift to signal a 1 and an up-shift to signal a 0 (Figure 3(c)). This shift must occur in the middle of the bit period for the signal to be valid.

d. Non-Return-to-Zero, Inverted (NRZI). A further refinement defines that simply a transition across the time interval boundary indicates a 0 and the lack of a similar transition indicates a 1 (Figure 3(d)).

Each of these encoding methods has distinct advantages and disadvantages in aspects such as overall signaling speed, average power consumed, error rates, and the need for a separate clock.

It should be mentioned that encoding is performed to enable data transfer and not to provide secrecy. It will also be understood that distinct strings of bits may be encoded to represent letters and words. Once again, the goal of these codes is not secrecy but the establishment of distinct and unambiguous meanings for various bit patterns. Two of the more common encoding schemes are as follows:

a. ASCII. One common encoding scheme is ASCII, the American Standard Code for Information Interchange, published by the American National Standards Institute. ASCII uses a seven-bit string to signal different English alphanumeric characters. The use of seven bits limits the character set to $2^7 = 128$ different characters.

b. EBCDIC. IBM increased the number of possible characters to 256 by using an eight-bit coding system known as the Extended Binary Coded Decimal Interchange Code (EBCDIC). Representative values of these codes are shown in Table 1.

Table 1: Common Binary Codes

Character	ASCII	EBCDIC
A	100 0001	1100 0001
Z	101 1010	1110 1001
5	011 0101	1111 0101
etc.	etc.	etc.

Other data processing systems use different binary coding systems with different numbers of bits, sometimes adding extra bits for error detection/correction.

It should be noted that digital signals may be transmitted between two communicating components via single- or multiple-conductor electrical (or fiber optic) cables. In order to communicate, sending and receiving components must agree upon the format of the signals they exchange. Common signal formats include serial (one bit at a time over a single conductor) and parallel (several bits at a time over multiple-conductor cables). See Fig. 4. It will be appreciated that fiber optic transmission usually involves a serial-format transmission over a fiber optic cable.

Although all signals are bound by the physical limit on transmission speed in any particular medium (and none can exceed the speed of light), signal formats may differ in how frequently they inject or extract data on the communication channel, as defined in their interface specifications. Numerous private, public, and international interface standards exist. Interface standards also include timing considerations and descriptions of associated control signals, such as "ready to send," "ready to receive," etc.

Other standards allow for more complex manipulations of data. It is possible (and commonly practiced) to inject multiple signals on a single communication channel by subdividing time intervals or frequency bands on the communication channel; this technique is generally known as multiplexing. It should also be mentioned that another increasingly common signal manipulation is data compression and decompression according to specific algorithms.

Most modern technical, commercial, and scientific activities simultaneously use a wide variety of digital data sending and receiving devices. These devices include not only computers, but an increasing number of peripherals which now generate digital data such as medical imaging equipment, radars, and voice communications systems. The wide variety of these systems is further increased by the fact that different systems are bought over time, each differing slightly from previous models. Interoperability is highly desirable in order to take advantage of still-useful equipment (collectively known as *legacy systems*).

The physical and electrical arrangement of components within any facility usually is not permanently fixed. Components are taken off-line for maintenance or repair, new components are added, and old components are removed. Activity missions frequently change, and data processing resources are re-aligned according to the task at hand, sometimes on an hourly basis. For example, a large financial institution may choose to re-align resources to perform end-of-month invoice processing. In contrast, a military facility may choose to disconnect external communication devices in order to process classified data. It is usually cost prohibitive to purchase multiple equipment suites with overlapping capabilities to perform different missions. Realigning resources is more cost effective.

In order to realign components in response to mission changes, i.e., changes in facility usage, the activity may choose to unplug components and re-route the associated cables. Dozens of devices with dozens of input-output (I/O) channels each implies hundreds or potentially thousands of cables. These cables are frequently in crowded under-floor spaces or cable trays, and may need to be cut, spliced, and/or re-manufactured to fit new routes.

Switching is the most cost-effective method for realigning resources. A multiple-interface switch allows an activity to interconnect a wide variety of components while avoiding the need to manually re-route cables. In the discussion which follows, it should be assumed that the overall switching system design requirement specifies point-to-point switching unless the discussion states otherwise.

The most common type of a switch is a mechanical switch. Original point-to-point electrical signal switching equipment included simple multi-pole mechanical switches used for early telegraphy, and patch cables used by operators on early telephone systems. Fig. 5 illustrates a simple single-pole, dual-throw (SPDT) switch. Variants of mechanical signal switches still exist in many modern buildings. For example, although Fig. 5 shows a single communication line on the input side, multi-conductor (i.e., parallel) switches are common. Mechanical switches provide a rugged, relatively inexpensive point-to-point switch path. Mechanical switches are useful where rapid or frequent equipment realignments are not required, or for distributing analog (non-digital) signals such as radar and/or video signals. Because these switches involve mechanical moving parts and contacts, they require periodic maintenance, they are subject to wear and tear, and they are susceptible to eventual failure. Mechanical switches can be remotely controlled (opened and closed) using electrical remote control circuits. In general, mechanical switches are useful in small-scale applications with a limited number of destinations and where limited growth is expected.

It will be appreciated that additional destination poles can be added. Such switches are generally referred to as *1 x n* or *multi-pole* switches (where *n* represents the number of available destinations). They include T-Bar Corporation's T-Bar switches and Purvis Corporation's MultiPort switches. These are depicted schematically in Fig. 6. Notice that it is possible to gang these switches to achieve an increased value of *n*; Fig. 6 shows an effective 1 x 3 switch achieved by splitting one of the outputs of the first 1 x 2 switch. Multi-pole switches up to 1 x 8 are commonly available.

Another common switch type is a crosspoint switch. It should be mentioned that early crosspoint switches were implemented via a relay design by the Bell Telephone Company for their telephone switching centers. These switches have mostly been replaced by solid state crosspoint switches. Moreover, an electric path between multiple inputs and multiple outputs can be effected using solid-state technology known as *crosspoint* switching. At the highest level, these electronic switches appear as n x m switches, as shown in Fig. 7. These switches may also be commonly referred to as *matrix switches*. Examples include the Navy's High-Speed Digital Switch (HSDS)(AN/USQ-62(V)) and Low-Level Serial (LLS) Switch (AN/FSQ-157(V)). HSDS is implemented in several Navy sites in either 256 x 256 or 1024 x 1024 configurations. Integrated crosspoint switch circuit elements containing 32 x 32 switches on a single chip are common. Symmetry is not required; a 64 x 33 crosspoint switch provides 64 inputs and only 33 possible outputs.

Referring to Fig. 7, it should be noted that although the lines appear to lay across each other and therefore electrically connect, the connection is actually controlled by an AND gate which provides a method for external control. See Fig. 8. An AND Gate is a logical device whose output is 1 only when *both* inputs are 1. Lacking a 1 signal on the control line, the AND gate will not produce an output and the crosspoint is not connected. It will be appreciated that reconfigurable crosspoint switches require less switch allocation planning than mechanical switches and consume fewer resources per switched channel than mechanical switches, especially when mechanical switches must be ganged.

A variant of the conventional crosspoint switch is the minimized crosspoint switch. The principal problem with crosspoint switches is that the number of required crosspoints grows as the square of the number of input lines. In Fig. 7 above, the simple crosspoint switch for eight input channels and eight output channels requires 8 x 8, or 64 crosspoints. A simple 100-channel switch requires 10,000 crosspoints, and each crosspoint requires a separate control line. This number can be dramatically reduced by eliminating self-connections and assuming bi-directional (full duplex) communications. Fig. 9 illustrates the eliminated crosspoints within the shaded area achievable

using a minimized crosspoint switch. The general equation for the number of required crosspoints in a minimized crosspoint switch with n inputs is:

$$\text{Minimum number of crosspoints} = n\,(n - 1)/2 \qquad (1)$$

The number of physical switches needed to provide, for example, sixteen signal paths can also be minimized by the use of multi-stage switching. Stated another way, crossbar switch size and complexity can be reduced by using intermediate stages. Fig. 10 shows a multi-stage switch (also known as a space division switch). In the exemplary multi-stage switch illustrated in Fig. 10, a virtual N x N (16 x 16) switch has been created using four 4 x 2 input crossbars, two 4 x 4 intermediate stage crossbars, and four 2 x 4 output crossbars. Instead of having the 16 x 16 = 256 crosspoints of a simple crosspoint switch, or the $n(n\text{-}1)/2$ = 120 crosspoints of a minimized crosspoint switch, this switch uses only 96 crosspoints. The general equation for the number of crosspoints is:

$$\text{Number of crosspoints} = 2kN + k(N/n)^2 \qquad (2)$$

It should be mentioned here that although some reduction in complexity is achieved by staging, blocking is possible when there is contention for one of the intermediate stages. As mentioned above, blocking is a condition where a connection is refused because the switch assets are already being used to connect other devices. In Fig. 11, all eight available intermediate stage channels are used (shown by heavy lines with arrows), indicating that additional connections cannot be made, even though there are free input and output channels. It will be appreciated from equation (2) that adding additional intermediate stages will ease the bottleneck; when the number of intermediate stages (k) equals $2n$ - 1, the switch will not block, as noted by Clos in an article entitled "A Study of Non-Blocking Switching Networks," which article appeared in Bell System Technical Journal, Volume 32, pp. 406-424, March 1953. It will also be appreciated that the decision whether or not to add intermediate stages is usually based on total cost, complexity, physical space, and performance requirements.

Referring now to Figs. 12A and 12B, the concept behind a conventional trunk switch will now be discussed. Referring to Fig. 12A, the illustrated trunk cable provides a heavily loaded system a degree of flexibility by directly connecting ports on two different switches. It should be noted that trunk cables are used when the size of a switch becomes inadequate for user requirements or there are not enough switching assets close enough to the equipment channels which need to be switched. The use of trunk cables consumes available switching ports in static, unswitchable applications. Fig. 12B illustrates the use of a trunk switch. This type of switch is used to allow a path to equipment that is not directly accessible from another switch. Like trunk cables, the use of trunk switches is cost-prohibitive. Again, this type of switching arrangement usually is the result of expanding switching requirements beyond their intended maximum requirements.

Packet switching is a widely used alternative to point-to-point switching. Although communication via local and wide-area computer networks (LANs and WANs) has grown in popularity in the past several years, such networks do not offer a complete solution to the point-to-point switching problem. Most networks handle long-distance communications by using a process of packet switching in which larger messages are broken up into transmittable portions (packets), several layers of header data are added, and the message (data) proceeds through a series of intermediate destinations until its final destination is reached. Fig. 13 shows a typical packet switching network. Points A and M could represent opposite ends of an office (LAN) or offices in separate cities hundreds of miles apart (WAN).

It will be appreciated that data packets may be buffered (stored) until intermediate channels are available. Depending on the specific network technology selected, packets may follow different paths to the same destination, such as those shown by the heavier solid lines and the heavier dashed lines connecting A and M. This means that the packets may arrive out of order at the destination, or may simply be lost in transmission. The processor at the destination must collect and inventory packets, remove header data, and then re-assemble and verify the message. In addition, if the network is used by multiple participants, some form of contention arbitration scheme is required.

Arbitration implies some form of selection, momentary storage, and delayed transmission of a packet.

Current switching technology has several limitations and disadvantages including:

a. Limited Capacity. Mechanical switches are not adequate for the sheer volume of switched interfaces in modern facilities; the amount of time and labor required to manually re-set a large number of switches is usually prohibitive and error-prone. Mechanical switches also require regular maintenance and are prone to failure;

b. Limited Interface Types. Crosspoint switches usually handle only one interface type (e.g., parallel or serial);

c. Complexity. While modern integrated circuit technology can accommodate thousands of crosspoints, connecting thousands of data and control conductors to a single chip is unreasonably complex and expensive as the number of data and control channels increases. Multi-stage switches allow the use of smaller but more numerous crosspoint switches, but at the cost of possible blocking. Adding sufficient intermediate stages to forestall blocking re-introduces design complexity;

d. Performance Inconsistency. Packet switching over LANs and WANs, while very useful for many purposes, is fundamentally not deterministic in large applications where dynamic traffic loads cause variations in routing, timing, and (in some architectures) possible losses of packets. This method of communication is therefore not useful in data transfer applications where the signal route and elapsed time must be consistent and predictable (such as when the computer system itself is under test);

e. Unmanageable Physical Components. Most current switching designs are not distributable. The physical arrangement of devices is bounded by both the speed of

electrical signals and the ability to humanly manage the installation. Equipment layout considerations are further complicated by distance limitations imposed by line losses associated with any purely passive device. If the switch's physical resources are not distributable, they may require a large amount of contiguous space in already crowded and expensive facilities; and

f. Procurement Challenges. A single switch of a given capacity, even if available and technically suitable, would most likely be difficult to acquire since the total switching needs of any facility are difficult to predict. A scalable design allows users to purchase adequate resources for current needs while leaving the option open for future system expansion in response to future system needs.

Alternative designs which use combinations of the current technology are also presently available. Several alternative designs are described immediately below. These descriptions also note the problem(s) associated with each alternative design. Table 2 below summarizes the disadvantages of the alternative designs.

Table II - Disadvantages of Alternative Designs

Alternative Design	**Disadvantages**
#1: Large Matrix Switch	Separate converters required Cable congestion Cable length limitations Physical size
#2: Network Approach	Timing inconsistencies High latency Possible lost/out-of-order packets
#3: Mixed System	Very difficult logistics Inefficiencies in trunking Cable congestion

Alternative Design No. 1 is simply a large matrix switch. See Fig. 14A. If both electrical and fiber optic signals are to be passed through the same switch, then some form of converters are required. The disadvantages of this design include cable congestion in and around the matrix switch, cable length limitations, and the physical size of the switch. Required converters would introduce a relatively high latency in electrical parallel and fiber optic paths.

Alternative Design No. 2 is a network approach, as illustrated in Fig. 14B. Once again, numerous conversions must be performed in order to access the network. The specific disadvantages of this design include timing inconsistencies, high latency (due to packetization, channel arbitration, and other network management overhead), and possible lost or out-of-order packets. A leading high-speed network transfer protocol, ATM (Asynchronous Transfer Mode), for example, does not guarantee packet delivery.

Alternative Design No. 3 calls for a mixed system of different types of switching, i.e., a multi-layer switch fabric. This is frequently the "real world" system which has evolved in many facilities. As shown in Fig. 14C, this type of system uses several different switches, often of different types, to route signals between and among other serviced equipment and other switches. The switches shown may be matrix switches, mechanical switches, or fiber optic switches, each with its own conversion requirements. The major disadvantages of this system include very difficult logistics, making parts support and maintenance very costly and inefficient; inefficiencies in trunking (using up switch ports), and frequently the same cable congestion problems found in large matrix switches. In addition, converters would be required on all of the serial or parallel ports to make all signal interface formats the same upon entering the switch.

What is needed is a switching system capable of interconnecting a large number of electronic components in a manner which allows the components to function as if they were physically hard wired to one another. Preferably, the functional behavior of the switching system would be such that one device that uses virtually any type of data transfer protocol can be connected to any other device that uses that same data transfer protocol. Advantageously, the functional behavior of the switching

system would be such that the switching system would exhibit low latency (achieving a total data transfer delay close to the latency associated with a direct-wired configuration), timing consistency (achieving a latency which is deterministic and predictable), and high signal fidelity (not adding to, deleting from, or altering the signal in any way). What is also needed is a switching system capable of handling multiple signal types up to 10 kilometers (km) apart under the verified control of a single controller.

SUMMARY OF THE INVENTION

Based on the above and foregoing, it can be appreciated that there presently exists a need in the art for a switching system which overcomes the above-described deficiencies. The present invention was motivated by a desire to overcome the drawbacks and shortcomings of the presently available technology, and thereby fulfill this need in the art.

Advantageously, the Multi-Interface Point-to-Point Switching System (MIPPSS) according to the present invention provides the ability to interconnect a large number of electronic components in a manner which allows the components to function as if they were physically wired, i.e., hard wired, together. It should be noted that while each of these qualities may already exist separately in other switching components, MIPPSS is the first switching system which advantageously combines all of these features and attendant advantages within a single design.

An object according to the present invention is to provide a switching system which correctly recognizes a plurality of different signal shapes while disregarding system noise.

Another object according to the present invention is to provide a switching system which accommodates a plurality of different digital encoding techniques.

Still another object according to the present invention is to provide a switching system designed to handle multiple interface types while operating at a bit, and not a word or character,

level. Stated another way, the switching system according to the present invention makes no attempt to interpret a bit string; it simply passes the bit string along without modification. Thus, the switching system disregards different data formats or signal manipulations and simply transfers the signal to the appropriate destination as it is presented.

A still further object according to the present invention is to provide a switching system operating under an automated controller and using pre-established configuration definitions so as to permit re-alignment of the switching system in seconds rather than hours or days.

Yet another object according to the present invention is to a provide a switching system which avoids the problems of network or packet-switched systems including the processing delays, overhead, and timing inconsistencies associated with network protocols, while providing the high-fidelity, point-to-point data transfer required in many scientific and technical applications.

Another object according to the present invention is to provide a switching system which rapidly handles a large number of interface protocols, retains low latency which is deterministic and predictable, and maintains high signal fidelity, all within a manageable and budgetable envelope.

An object according to the present invention is to provide a switching system exhibiting multi-interface functional behavior. It should be noted that multi-interface functional behavior connotes that a device that uses virtually any type of data transfer protocol can be connected to any other device that uses that same data transfer protocol. Advantageously, MIPPSS is capable of simultaneously handling various parallel and serial signal formats, at different data rates and different voltage levels, and fiber optic signals. These signals can be of virtually any data type, i.e., communications, images, sensor data, accounting records, and can be used for any scientific, commercial, or military purpose. MIPPSS offers the advantage of using a single system operating under a single controller to provide all switching services for a given facility.

Another object according to the present invention is to provide a switching system exhibiting a data transfer speed approximating that of dedicated copper wire, i.e., a data transfer speed close to the speed which would have been achieved in a direct-wired configuration wherein the total point-to-point delays appear as a fixed length of cable. Stated another way, the switching system according to the present invention overcomes the disadvantages, i.e., inconsistent routing, inconsistent timing, and packet delays (or losses) associated with the overhead of operating a packet-switching network.

Still another object according to the present invention is to provide a switching system exhibiting timing consistency, i.e., a data transfer speed which is deterministic and predictable.

A further object according to the present invention is to provide a switching system exhibiting high signal fidelity, i.e., a switching system which does not add to, delete from, or alter the signal in any way, and/or transparency.

A still further object according to the present invention is to provide a switching system having a distributed design, i.e., each switching unit has the capability of servicing multiple locations and, thus, no single location houses the entire switch system.

A related object according to the present invention is to provide a switching system designed and implemented with standardized units or dimensions to thereby promote flexible use.

A still further object according to the present invention is to provide a switching system wherein the switch size can be increased or decreased in increments of two I/O pairs from a minimum size of two I/O pairs up to a maximum of N I/O pairs of any interface type, where N is a positive integer. Preferably, N is equal to 4096 in the exemplary embodiment discussed below, although N may be much greater than 4096.

Another object according to the present invention is to provide a switching system which automatically locates the quickest (lowest latency) available signaling path and establishes a point to point connection using that path.

An object according to the present invention is to provide a switching system exhibiting a high message throughput in addition to a high transfer speed of raw data. Preferably, the switching system achieves a high message throughput by taking advantage of local switching between adjacent components. A closely related object according to the present invention is to provide a switching system wherein once a transmission path has been established, that transmission path cannot be used to transmit any other signal for the duration of the connection. It should be mentioned that the switching system according to the present invention, by combining the characteristic of local switching and a dedicated path usage, i.e., a path once set stays set, permits messages to be transmitted efficiently without address interpretation required in other switching architectures.

A further object according to the present invention is to provide a switching system wherein each connection is verifiable. In particular, a given switch action advantageously can be validated by sending an electric pulse from the input port to the output port; if the signal is received at the intended output, the connection is valid.

Another object according to the present invention is to provide a switching system exhibiting path selectability, whereby any given path through the switch may be selected via software commands. Preferably, the switching system automatically chooses the switchable path that exhibits the lowest timing delay. As mentioned above, this path, once made, remains fixed until actively released. Advantageously, there are alternate paths that are software selectable.

Yet another object according to the present invention is to provide a switching system exhibiting a non-blocking characteristic, i.e., any signal input can be switched to any signal output. Stated another way, the architecture of the inventive switching system does not inhibit the switching action between the input and output ports.

Still another object according to the present invention is to provide a switching system exhibiting automated control and management functions, e.g, the inventive switching system will locate the quickest (lowest latency) available path and establish a point to point connection. When the first tested path is unavailable (in use or damaged), the system locates the next-lowest latency connection. Preferably, the switching system can also be remotely and rapidly configured/reconfigured under software control. Advantageously, the switching system can be programmed to perform initial, periodic, and on-demand Built-In Test(s) (BIT) to assess switching system function and localize failed components.

A still further object according to the present invention is to provide a switching system with the ability to replace ("hot swap") units, e.g., modules and/or cards, while the switching system is operating.

Moreover, an object according to the present invention is to provide a switching system employing Commercial Off The Shelf (COTS) hardware in redundant modular designs to the maximum extent possible.

These and other objects, features and advantages according to the present invention are provided by a switching system which delivers a plurality of different signal types including selected ones of parallel electrical signals, serial electrical signals, irrespective of voltage level and logic type, and optical signals, wherein the switching system provides content independent point-to-point connections.

These and other objects, features and advantages according to the present invention are provided by a switching system delivering a plurality of different signal types including selected ones of parallel electrical signals, serial electrical signals, irrespective of voltage level and logic type, and optical signals to thereby provide content independent point-to-point connections. Preferably, the switching system includes a plurality of port interface racks, each of which either receives or outputs at least one of the selected signal types, and a hub rack which selectively delivers at least one

of the selected signal types between any two of the port interface racks and which delivers all of the selected signal types responsive to an independent software command.

These and other objects, features and advantages according to the present invention are provided by a switching system delivering a plurality of different signal types including selected ones of parallel electrical signals, serial electrical signals, irrespective of voltage level and logic type, and optical signals to thereby provide content independent point-to-point connections. The switching system includes a plurality of port interface racks, each of which either receives or outputs at least one of the selected signal types, and a hub rack which selectively delivers at least one of the selected signal types between any two of the port interface racks and which delivers all of the selected signal types responsive to an independent software command. The switching system is further characterized in that at least one of the port interface racks delivers the selected signal types substantially unaltered, has relatively low latency, delays the selected signal types an amount substantially equal to an inherent delay associated with a direct-wired point-to-point connection, and provides a signal latency which is deterministic, predictable, and consistent. Advantageously, the switching system switches responsive to an independent software command received by the hub rack.

These and other objects, features and advantages according to the present invention are provided by a switching system delivering a plurality of different signal types including selected ones of parallel electrical signals, serial electrical signals, irrespective of voltage level and logic type, and optical signals, to thereby provide independent point-to-point connections. The switching system includes a plurality of port interface racks, each of which either receives or outputs at least one of the selected signal types, and a hub rack which selectively delivers at least one of the selected signal types between any two of the port interface racks and which delivers all of the selected signal types responsive to an independent software command. According to one aspect of the present invention, two of the port interface racks and the hub rack cooperatively deliver the selected signal types substantially unaltered, have relatively low latency, delay the selected signal types an amount substantially equal to a natural delay associated with that of a direct-wired point-to-point connection,

provide a signal latency which is deterministic, predictable, and consistent. According to another aspect of the present invention, the switching system switches responsive to an independent software command received by the hub rack.

BRIEF DESCRIPTION OF THE DRAWINGS

These and various other features and aspects of the present invention will be readily understood with reference to the following detailed description taken in conjunction with the accompanying drawings, in which like or similar numbers are used throughout, and in which:

Fig. 1 is a partially block, partially schematic diagram of a multi-interface point-to-point switching system (MIPPSS) according to the present invention;

Fig. 2 illustrates the concept of a signal representative of a single bit of digital data;

Fig. 3 illustrates a serial bit stream encoded in accordance with a variety of encoding techniques;

Fig. 4 compares and contrasts serial and parallel data transmission between exemplary devices;

Fig. 5 illustrates the operation of a single pole, double throw switch;

Fig. 6 schematically illustrates a plurality of 1 x 2 multi-pole switches ganged together to form a 1 x 3 multi-pole switch;

Fig. 7 schematically illustrates an m x n crosspoint switch;

Fig. 8 is a representational view of one of the crosspoints of the crosspoint switch depicted in Fig. 7;

Fig. 9 illustrates the "switch saving" for a minimized crosspoint switch over a conventional crosspoint switch;

Fig. 10 illustrates a conventional multi-stage (space division) switch;

Fig. 11 schematically illustrates the concept of blocking encountered when using a multi-stage switch of Fig. 10;

Fig. 12A is a block diagram which facilitates an understanding of the concept of a trunk cable, while Fig. 12B is a block diagram which is useful in understanding the operation of a trunk switch;

Fig. 13 is a high level block diagram of a conventional packet switching network;

Fig. 14A is a block diagram of a conventional, large matrix switch, Fig. 14B is a block diagram of a conventional network, while Fig. 14C is a block diagram of a switching system formed from a plurality of unrelated and unconnected components;

Fig. 15A is a high level block diagram of an exemplary configuration of the multi-interface, point-to-point switching system (MIPPSS) while Fig. 15B is a high level block diagram illustrating the connection between selected components of the MIPPSS to a unified control computer (UCC) according to the present invention;

Figs. 16A, 16B and 16C illustrate front and side views, respectively, of an exemplary one of the port interface racks (PI Racks) employed in the switching system of Fig. 15;

Fig. 17 is a sectional view of the exemplary PI Rack, which illustrates the available port connections of the PI Rack shown in Figs. 16A and 16B;

Fig. 18A is a more detailed illustration of a PI Cage, which fits within the PI Rack depicted in Figs. 16A and 16B and Fig. 18B is an exemplary illustration of features of the PI Racks which facilitate hot swapping of components for maintenance;

Fig. 19 illustrates one possible configuration of a cooling module which can be employed to reduce the ambient temperature in the PI Rack illustrated in Figs. 16A and 16B;

Fig. 20 illustrates one possible configuration of a DC power module which can be employed to provide DC power to various components in the PI Rack illustrated in Figs. 16A and 16B;

Figs. 21A and 21B collectively form a more detailed illustration of the Port Connector Panel illustrated in Fig. 17;

Fig. 22 illustrates an exemplary form of a PI Rack Diagnostic terminal which advantageously can be employed in connection with the PI Rack illustrated in Figs. 16A and 16B;

Fig. 23 illustrates an exemplary form of the PI Rack AC Power Module installed in the PI Rack of Figs. 16A and 16B;

Figs. 24A and 24B are front and side views, respectively, of a Hub Rack included in the MIPPSS assembly illustrated in Fig. 15;

Fig. 25 illustrates an exemplary configuration of a Hub Controller cage found in the Hub Rack illustrated in Figs. 24A and 24B;

Fig. 26 illustrates one exemplary arrangement of a Hub Controller Personal Computer (PC) which can be deployed in the Hub Rack depicted in Figs. 24A and 24B;

Fig. 27 illustrates a Time-Sampled Bridge Cage employed in the Hub Rack pictured in Figs. 24A and 24B;

Fig. 28 depicts Hub Rack AC Power Supply providing power to selected components in the Hub Rack illustrated in Figs. 24A and 24B;

Fig. 29 is a block diagram illustrating intra-quad PI Board routing of parallel signals according to the present invention;

Fig. 30 is a block diagram illustrating intra-quad PI Board routing of serial signals according to the present invention;

Fig. 31 is a block diagram illustrating Intra-PI Cage routing of parallel signals according to the present invention;

Fig. 32 is a block diagram illustrating Intra-PI Cage routing of serial signals according to the present invention;

Fig. 33 is a block diagram illustrating Intra-PI Rack routing of parallel signals according to the present invention;

Fig. 34 is a block diagram illustrating Intra-PI Rack routing of serial signals according to the present invention;

Fig. 35 is a block diagram illustrating, in general terms, parallel signal routing from an origin PI Rack to a Hub Rack according to the present invention;

Fig. 36 is a block diagram illustrating a first alternative signal routing option associated with the block diagram of Fig. 35;

Fig. 37 is a block diagram illustrating a second alternative signal routing option associated with the block diagram of Fig. 35;

Fig. 38 is a block diagram illustrating a third alternative signal routing option associated with the block diagram of Fig. 35;

Fig. 39 is a block diagram illustrating a fourth alternative signal routing option associated with the block diagram of Fig. 35;

Fig. 40 is a block diagram illustrating, in general terms, parallel signal routing from a Hub Rack to a destination PI Rack according to the present invention;

Fig. 41 is a block diagram illustrating a first alternative signal routing option associated with the block diagram of Fig. 40;

Fig. 42 is a block diagram illustrating a second alternative signal routing option associated with the block diagram of Fig. 40;

Fig. 43 is a block diagram illustrating a third alternative signal routing option associated with the block diagram of Fig. 40;

Fig. 44 is a block diagram illustrating a fourth alternative signal routing option associated with the block diagram of Fig. 40;

Fig. 45 is a block diagram illustrating, in general terms, serial signal routing from an origin PI Rack to a Hub Rack according to the present invention;

Fig. 46 is a block diagram illustrating, in general terms, serial signal routing from a Hub Rack to a destination PI Rack according to the present invention;

Fig. 47 is a block diagram illustrating Inter-Hub Rack signal routing according to the present invention.

DETAILED DESCRIPTION OF THE PREFERRED EMBODIMENTS

The Multi-Interface Point-to-Point Switching System (MIPPSS) according to the present invention is a switching system which provides the ability to interconnect a large number of electronic components in a manner which allows the components to function as if they were physically wired, i.e., hard wired, together. The term "Multi-Interface" signifies functional behavior wherein a device using virtually any type of data transfer protocol can be connected to any other device using that same data transfer protocol. The term "Point-to-Point" signifies functional behavior wherein the switching system exhibits: (a) low latency, i.e., a total data transfer delay approximating

the delay achievable via a direct-wired configuration; (b) timing consistency, i.e., a latency which is deterministic and predictable; and (c) high signal fidelity, i.e., neither adding to, deleting from, nor altering the data signal in any way. In short, MIPPSS preferably provides the ability to switch a large number of interface protocols, retaining a deterministic and predictable low latency characteristic while maintaining high signal fidelity, all within an easily managed distributed and scalable architecture. MIPPSS advantageously is capable of handling multiple signal types up to 10 kilometers (km) apart under the control of a single controller.

An exemplary configuration of MIPPSS according to the present invention is illustrated in Fig. 15A, wherein MIPPSS advantageously is formed from multiple units which can be categorized into two basic types: Port Interface Racks (PI Racks) **1** and Hub Racks **2**, which collectively constitute the switch fabric. Connections among the MIPPSS various racks advantageously are accomplished using either Fiber Optic MIPPSS Interconnections **3** or Electrical MIPPSS Interconnections **4**. Connections to User Equipment **5** or User Systems **6** are preferably accomplished either via Fiber Optic User Equipment/System Cables **7** or Electrical User Equipment/System Cables **8**, depending on the user equipment or system configuration. It should be mentioned that Hub-to-Hub communications are effected via a Hub-to-Hub Data/Control Communications Cable Assembly **91/92**.

Still referring to Fig. 15A, it should also be mentioned that while a Hub Rack 2 with a full complement of 8 PI Racks **1** comprises a non-blocking 512 x 512 switching system, a prototypical MIPPSS, which is shown within the shaded area as a pair of Hub Racks **2** and 4 PI Racks **1** and which is it is not fully populated, constitutes a 256 x 256 system. If the prototype MIPPSS were expanded to 1024 x 1024, it is a non-blocking switch for up to 512 x 512 via any one hub, but exhibits limited blocking above 512 x 512 or at any time signals go through both of the installed hubs. It should be noted that portions of MIPPSS are expandable, subject to system control capabilities. It should be mentioned that the MIPPSS need not establish only one-to-one connections. Preferable, MIPPSS includes the capability to transfer data from one input port to a predetermined number of output ports simultaneously, thus exhibiting a broadcast functionality,

particularly for NTDS Type A and Type B signals. This broadcast functionality advantageously permits the MIPPSS to communicate data, e.g., time of day and navigation data, which data can be used by many system recipients simultaneously.

It should be mentioned here that a fiber optic extender module **300** advantageously can be connected to a selected PI Rack 1 to permit input/output of multiple data signal types from components located remote, e.g., greater than one kilometer, from the bulk of the MIPPSS. Extender module **300** will be discussed in greater detail below.

Referring to Fig. 15B, the Hub Rack **2** interfaces with a unified control computer (UCC) **2a** via either RS-232 or Ethernet (TCP/IP) formats at a minimum of 19200 baud using X-ON/X-OFF protocol to control the serial data flow. More specifically, the Hub Rack **2** communicates with the UCC **2a** over two types of ports, i.e., four Ethernet ports and up to five RS232 ports, advantageously are included in the HUB Controller Cage **23**, which is discussed in greater detail below. It should be noted that for maintenance purposes, Local Maintenance Terminals (LMTs) or PI Rack Diagnostic Terminal **17** (See Fig. 22.) can be attached to any PI Cage **13**, as discussed in greater detail below. A maximum of ten PI Rack Diagnostic Terminals **17** may be active at any one time. The Ethernet and RS232 limits are the maximum number of physical ports of these devices that are available on the HUB Controller. The limitation on the PI Rack Diagnostic Terminal **17** is due to resource allocation in the operating software. Eight PI Rack Diagnostic Terminals **17** are provided for a fully populated HUB Rack **2**, one per PI Rack **1**.

The communication required for controlling and interfacing with the MIPPSS is defined by a series of software commands having a command syntax facilitating the exchange of messages among MIPPSS components, i.e., the PI Racks **1** and the associated Hub Rack **2**, and the UCC **2a**. The commands and responses advantageously are in the general form:

Command Format:	cc[,param]…[,param]<CR	
Where:	• cc is the two-character command, and • [,param]…[,param] are the parameters required for the command	
Response Format:	C[,msg. text]	Command completed successfully without further user attention.
	W,[nnnnn,]msg. text	Command completed with some explanation for possible user action. (Message text limited to 130 characters)
	F,[nnnnn,][xxxxx,…yyyyy]msg. Text	Command failed as indicated by the message text. (Message text limited to 130 characters)
Where:	• nnnnn is the 5-digit number of the first port identified in the command being responded to, and • xxxxx through yyyyy are all ports in error relative to the message	

It should also be mentioned that all commands must be terminated with a <CR>. As previously mentioned, the RS-232 port uses X-ON/X-OFF protocol to control the serial data flow. Communications between the MIPPSS components and the UCC **2a** are classified as Operational Mode or Diagnostic Mode. Error Mode messages are provided to facilitate operation of the MIPPSS.

Operational Mode of the MIPPSS is used to set, break, and display connections. More specifically, the operational mode Commands transmitted, in an exemplary case, from the UCC **2a** to the Hub Rack **2** are used to set, break, and display connections. The UCC **2a** sends a two-character command followed by required parameters to the Hub Rack **2**. The Operational Mode commands available for control of the Data Transfer System are listed in the following table.

Table III – Operational Mode Command List	
Command	**Function**
BP	Break Port
BR	Break Range
DF	Display Free
DL	Display Linked
DM	Diagnostic Mode
DP	Display Port
DT	Display Type
EM	Error Message
GM	Get Error Message
HE	Help
LM	Link Many
LP	Link Port
LS	Link Special Low Latency
OM	Operational Mode
PF	Print offF
PN	Print oN
RS	ReSet
SC	Set Communications
VF	Verify path offF
VN	Verify path oN
VP	Verify Path

From the table immediately above, it will be appreciated that the command set includes the ability to link individual ports, link one port to several ports, verify connections between ports, break individual connections between ports, break a specified range of connections between ports, display the interface type of a port, and reset communications between the MIPPSS components and the UCC **2a**. Also included is the ability to change to the Diagnostic Mode or Error Message Mode of

operation. It should also be mentioned that all linking commands include an automatic breaking of previously established connections.

In the Operational Mode, several different forms of self-diagnostic testing are performed. For example, each PI Rack 1 advantageously performs one or more built-in test(s) (BIT) that automatically and periodically check the status of the components within the PI Rack and report any faults to the UCC and system operator while the MIPPSS is online. In other words, the MIPPSS uses built-in test (BIT) routines and other diagnostic functions to automatically resolve and log failures down to the lowest replaceable unit (LRU) at the cabinet level.

Additionally, the MIPPSS advantageously includes Built-In Test Equipment (BITE) to facilitate accurate fault detection. Moreover, all of the PI Racks **1**, all of the Hubs **2**, and the UCC **2a** cooperate to automatically resolve and log failures down to the component level 99% of the time and, preferably, automatically log failures down to the LRU level 98% of the time. After fault detection, amplifying data such as error messages shall be provided to the UCC **2a**. These fault messages shall indicate the both the test(s) conducted and the failure(s) incurred. All failures shall be reported to the UCC **2a**.

The Diagnostic Mode is used to perform hardware maintenance functions. More specifically, Diagnostic Mode allows the users to access MIPPSS component resources at the hardware level to perform diagnostics on the MIPPSS. The diagnostic tests can interrupt any background test in progress by requesting a resource being used by the background test. It should be noted that a diagnostic test cannot interrupt a link made in Operational Mode by stealing its resources. However, it should also be noted that certain commands can effect the operation of individual operational links and even the entire system. Therefore, a password is required when entering the Diagnostic Mode if the diagnostic commands affecting linked resources are to be used. The Diagnostic Mode is invoked by any port of UCC **2a** from the Operational Mode using the DM command, as indicated above. Once in this mode, the UCC **2a** is enabled on that port to issue any of the diagnostic mode commands as well as any of the operational commands. It should be noted that when any port of the

UCC **2a** is in Diagnostic Mode, the HUB Controller keyboard **244** (Discussed below.), and any of the PI Rack Diagnostic Terminals **17** (See Fig. 22.) are enabled. Similarly, any port of the UCC **2a** having used the password with the DM command enables the HUB Controller keyboard **244** and any of the PI Rack Diagnostic Terminals **17** to use password protected commands. It should be mentioned that the structure of the commands and responses in the Diagnostic Mode are substantially identical to the Operational Mode.

It should be mentioned that in those cases where isolation down to the LRU cannot be made automatically from the UCC with the system operating, fault isolation shall be accomplished from the UCC using operator-initiated diagnostics with the MIPPSS operating or in stand-by. In the event of a UCC failure, fault isolation advantageously can be accomplished at the equipment rack via a local maintenance port with the MIPPSS operating or in stand-by.

Moreover, the Diagnostic Mode is terminated for an individual port when Hub Rack Cage **13** receives an OM command or Control Z (^Z) over that port from the UCC **2a**. On return to the Operational Mode, the Hub Rack Cage **13** will break all links created by this port during the diagnostic session, except those explicitly linked for extended diagnostic test. No other Hub Rack Cage **13** operating parameters will be changed, i.e., EM port designation, or RS232 communication port settings. When the last port of the UCC **2a** returns to Operational Mode, all of the PI Rack Diagnostic Terminals **17** and the HUB Controller Keyboard **244** will be disabled and all of their respective links will be broken.

The commands available to any port of the UCC **2a** in the Diagnostic Mode are all of the operational mode commands listed in the table above plus those listed in the following table.

Table IV – Diagnostic Mode Command List	
Command	**Function**
BD	Break Diagnostic
DH	Display patH
FR	display Failed Resources
IR	I2c Read
IW	I2c Write
LD	Link Diagnostic
OM	return to Operational Mode
RR	Register Read
RT	Reset local maintenance Terminal
RW	Register Write
SR	System function Read
ST	Self Test
SW	System function Write

It should be mentioned that Diagnostic Mode commands provide the MIPPSS with the ability to send (or cease sending) output to a connected printer, display ports in a selected range that are currently linked and what ports they are linked to, display free ports in a selected range (ports that are currently not linked), display port status (linked or not linked) in a selected range, set the MIPPSS to UCC communication settings for any of the five remote communication ports, check to determine whether an individual port is responding, display online help information, initiate self-testing, and Reset communications between the MIPPSS and the UCC. Also included is the ability to change to Operational Mode or Error Message Mode. It should be mentioned here that Error Message Mode is used to designate the port for reporting synchronous and asynchronous error messages from the MIPPSS to the UCC. This command is only available on the RS-232 ports.

Referring now to Figs. 16A and 16B, each Port Interface Rack (PI Rack) **1** includes a PI Rack Enclosure **11**, a PI Rack Equipment Mounting Rack **12**, a PI Rack Diagnostic Terminal **17** (which can be plugged into either PI Cage **13**), and a PI Rack AC Power Module **113**. Moreover, each PI Rack **1** can include up to two PI Cages **13**, up to two Cooling Modules **14**, up to two DC Power Modules **15**, and up to 32 Port Connector Panels (serial or parallel) **16**, as shown in Fig. 17. Additional details of these components are discussed below.

Preferably, the PI Rack Enclosure **11** also includes Removable Air Filters **111** on the door (not shown) to filter air drawn into the rack by the Cooling Modules **14**. AC Power is provided to the PI Rack via the PI Rack Main AC Power Cable **114**. The PI Rack Enclosure **11** also can be equipped with a PI Rack Exhaust Fan **112** to vent warm air through the top of the enclosure. The front rails of the PI Rack Equipment Mounting Rack **12** are recessed 4" back from the front of the PI Rack Enclosure **11** to allow room for cable routing and cable connections to each PI Cage **13**.

Advantageously, all of the interconnecting cables between the PI Rack **1** and the Hub Rack **2**, which will described in greater detail below, or between different PI Racks **1** enter into the PI Rack Enclosure **11** through the bottom and are connected to the fronts of the PI Cages **13**. All cables to and from serviced equipment beneficially can enter the PI Rack Enclosure **11** from the rear and be connected to the Port Connector Panels **16**. The Port Connector Panels **16** can be mounted on the rear of the PI Rack Enclosure **11** to allow access to the Port Connector Panel External Interface Connectors **161** for easy cable connection and disconnection. As mentioned above, each PI Rack **1** can contain up to 32 Port Connector Panels **16** with each Port Connector Panel **16** providing four connections for two complete (full duplex) I/O channels.

Each PI Cage **13** can connect to up to 16 of the (adjacent) Port Connector Panels **16** via 16 PI Cage to Port Connector Panel Cable Harnesses **18**. See Fig. 18A. Each PI Cage **13** can also be connected to the Hub Rack **2** via 32 PI Cage to Hub Rack Cable Assemblies **31**. In PI Racks **1** with two PI Cages **13**, there are three additional PI Cage to PI Cage Cable Assemblies **19** connecting together the two PI Cages **13**. In addition, the PI Cage **13** in each PI Rack **1** advantageously can be

connected to its corresponding Cooling Module **14**, DC Power Module **15**, and, when the PI Cage is the top PI Cage **13**, to the PI Rack Exhaust Fan **112** via the Monitor Cable Harness **138**.

Still referring to Figs. 16A and 16B, each Cooling Module **14**, DC Power Module **15**, and the PI Rack Exhaust Fan **112** preferably is connected to the PI Rack AC Power Module **113** via AC Power Cable Assemblies **1131**. Moreover, the PI Rack AC Power Module **113** can be connected to two other AC Power Modules **113** in the MIPPSS assembly using an AC Power Module Communications Cable Assembly **1132**.

As illustrated in Fig. 18A, each PI Cage **13** advantageously includes a PI Cage Enclosure **131**, an Extender Bridge **132**, a Fiber Optic Transmit (FOT) Router Board **1341**, a Fiber Optic Receive (FOR) Router Board **1342**, and a PI Cage Router Board **135**, and advantageously can include up to eight Quad PI Boards **133**. The PI Cage Enclosure **131** preferably is configured with flanges to facilitate the mounting of the enclosure to the PI Rack Equipment Mounting Rack **12**. Power to each of the modules and communications between modules is provided via the Multi-Layer Backplane **136**. Preferably, power to the Multi-Layer Backplane **136** is provided by the DC Power Module **15** (See Figs. 16A and 16B.) via the PI Cage Power Cable Assembly **137**. It should be mentioned that each board slides into the PI Cage **13** from the front such that the board's rear interface connectors advantageously can engage with a Backplane Mating Receptacle **1361** on the Multi-Layer Backplane **136**. Each Quad PI Board **133** is connected to two Port Connector Panels **16** via two of the PI Cage to Port Connector Panel Cable Harnesses **18**, i.e., ribbon cables, through the Multi-Layer Backplane **136**. The PI Cage to Port Connector Panel Cable Harness **18** advantageously connects to a PI Cage to Port Connector Panel Cable Assembly Backplane Connector Adapter **1362**, which is located on the rear of the Multi-Layer Backplane **136**.

It should also be mentioned that each FOT or FOR Router Board, **1341** or **1342**, is connected to a Hub Rack **2** via 16 of the PI Cage to Hub Rack Cable Assemblies **31** connected to the front of the boards. The PI Cage to Hub Rack Cable Assemblies **31** mate to a receptacle connector internal to the unit. Moreover, each FOT Router Board **1341** is connected to the FOT Router Board **1341**

contained within the other PI Cage **13** in the PI Rack **1** via one of the PI Cage to PI Cage Cable Assemblies **19**. Thus, each FOR Router Board **1342** is connected to the FOR Router Board **1342** contained within the other PI Cage **13** in the PI Rack **1** via one of the PI Cage to PI Cage Cable Assemblies **19**. The PI Cage Router Board **135** preferably is connected to the PI Cage Router Board **135** contained within the other PI Cage **13** in the PI Rack **1** via one of the PI Cage to PI Cage Cable Assemblies **19**. All three of the PI Cage to PI Cage Cable Assemblies **19** connect to PI Cage to PI Cage Cable Assembly Backplane Connector Adapters **1363** located on the rear of the Multi-Layer Backplanes **136**.

The front of the Extender Bridge **132** in the PI Cage **13** advantageously can include a PI Rack Diagnostic Terminal Cable Assembly Receptacle **1321**, which permits connection to the PI Rack Diagnostic Terminal **17** via the PI Rack Diagnostic Terminal Interface Cable Assembly **173**. In an exemplary case, the PI Rack Diagnostic Terminal Cable Assembly Receptacle **1321** can be a RJ-11 connector, although most other connector types advantageously can be used. In addition, the front of the Extender Bridge **132** has a second PI Rack Debugging Cable Receptacle **1322** for debugging via a standard RS-232 cable. The Extender Bridge **132** preferably is connected to the Hub Rack via a single PI Cage to Hub Rack Cable Assembly **31**, which advantageously mates to the Hub to Extender Bridge Connector Receptacle **1323** on the front of the Extender Bridge **132**.

It will be noted from Figs. 16A, 16B, and 18A that the Extender Bridge, in an exemplary case, can be connected to its associated Cooling Module **14**, DC Power Module **15**, and Rack Exhaust Fan **112** (in the case of the top PI Cage) via the Monitor Cable Harness **138** through the Multi-Layer Backplane **136**. It will also be noted that the Extender Bridge **132**, the Quad PI Boards **133**, the FOT/FOR Router Boards **1341/1342** and the Cage Router Board **135** all have front-mounted Light Emitting Diode (LED) Indicators **1300** that display the status of the respective unit. Advantageously, the Extender Bridge **132**, the Quad PI Boards **133**, the FOT/FOR Router Boards **1341/1342**, and the PI Cage Router Board **135** can all be disengaged from, and re-inserted into, the Multi-Layer Backplane **136** while power is applied to the PI Cage **13** and the PI Cage **13** is operating.

It should be noted that several board-level components of the MIPPSS have the ability to be removed and replaced while the remainder of the PI Rack **1** in which they are housed remains energized and operational. This feature is known as hot swap. The boards which preferably include this feature are the Extender Bridge **132**, Port Interface Boards **133**, the Fiber Optic Transmit and Receive (FOT/FOR) router boards **1341/1342**, and the Port Interface Cage Router Board **135**.

As illustrated in Fig. 18B, a maintenance technician initiates the sequence to replace a board by placing the hot swap switch in the remove position and depressing a button located on the front panel. This signals the Hub Controller Cage **13** to cease transmissions through this board and log it out of service in the database. When the board is ready for removal, a green LED located on the front panel of the board will illuminate, indicating that UCC **2a** has granted permission for its removal. At this point, the board may be safely removed and replaced. When replacing a board, the technician reinserts the board in the system, places the hot swap switch in the insert position and depresses a button located on the front panel. This signals the Hub Controller Cage **13** to test the board and log it in-service in the database.

Referring to Fig. 19, the Cooling Module **14** employed in the preferred embodiment is a packaged blower assembly manufactured by McLean Engineering (Model 4EB3500CDP). One Cooling Module **14** advantageously can be used to reduce the ambient temperature in each PI Cage **13** in the PI Rack **1**. As shown in Fig. 19, the Cooling Module **14** includes a Cooling Module Enclosure **141** and two Blowers **142** (not shown). The Cooling Module Enclosure **141** is configured with flanges to facilitate the mounting of the enclosure to the PI Rack Equipment Mounting Rack **12**. The Blowers **142** draw air through Intake Ducts **143** in the front of the module and exhaust it out the top of the module. The Cooling Module **14** preferably is connected to the Extender Bridge **132** of the PI Cage **13** cooled by the module via the Monitor Cable Harness **138**. The Monitor Cable Harness **138** connects to the rear of the Cooling Module **14**. Power to the Cooling Module **14** is provided by the PI Rack AC Power Module **113** (See Fig,. 16B.) via an AC Power Cable Assembly **1131**.

Referring now to Fig. 20, the necessary DC power for the PI Rack **13** advantageously can be provided by a DC Power Module **15,** which, in an exemplary case, is a commercially available power source manufactured by HC Power, Inc. The complete module includes two removable Power Supplies **152** (model HS1214-C1658) in a Power Module Enclosure **151** (model PS2-C1658). Each removable Power Supply **152** preferably contains an integrated Fan **1521** and removable Filter **1522** (not shown). One DC Power Module **15** is used for each PI Cage **13** in the PI Rack **1**. Together these components provide, in an exemplary case, a 1250 Watt multiple-output, redundant, hot-swap power system. It should be mentioned that each Power Supply **152** operates on AC voltage (supplied via the AC Power Cable Assembly **1131**) and can provide multiple DC outputs at different voltage levels. The input AC power is 90-264 VAC; each Power Supply **152** delivers four outputs rated at 5 VDC @ 180 Amps, 15 VDC @ 10 Amps, 12 VDC @ 4 Amps, and 12 VDC @ 4 Amps. The DC Power Module **15** provides power to the PI Cage **13** via the PI Cage Power Cable Assembly **137**. The outputs are floating and can be referenced as required.

It should also be mentioned that the front panel of each Power Supply **152** is equipped with LED Indicators **1520** indicating the status of the unit, potentiometer adjustments for adjustment of all output voltages, and Voltage Monitor Jacks **1525** which can be used to monitor various module voltages or obtain status information. Additional status information is provided at the rear of each Power Supply **152** via a Power Supply Monitor Receptacle **1526** (including remote sense, power fail, remote enable, and DC-OK are via a 25-pin D-sub connector (not shown)). The Power Module Enclosure **151** is configured to house two identical Power Supplies **152** and operate in parallel to provide redundant power, allowing one of the two power supplies to be removed or inserted while power is still supplied by the second unit. As illustrated in Fig. 20, the Power Module Enclosure **151** is configured with flanges to facilitate the mounting of the enclosure to the PI Rack Equipment Mounting Rack **12**. The DC Power Module **15** is connected to the Extender Bridge **132** of the PI Cage **13** powered by the module via the Monitor Cable Harness **138**, which mates to the Monitor Terminal Block **1527** (not shown) located on the rear of the DC Power Module **15**.

As illustrated in Figs. 21A and 21B, each of the Port Connector Panels **16** (Previously discussed in connection with Fig. 17.) includes External Interface Connectors **161**, a mounting plate **166**, and a Transceiver Board **167**. Advantageously, each Port Connector Panel **16** connects to a Quad PI Board **133** via a PI Cage to Port Connector Panel Cable Harness **18**. The Port Connector Panels **16** are preferably mounted on the rear of the PI Rack Enclosure **11** using the Mounting Plate **166**. It will be appreciated that a Port Connector Panel **16** connects to user devices or systems via Fiber Optic User Equipment/System Cables **7** or Electrical User Equipment/System Cables **8** and the External Interface Connectors **161**. Each Port Connector Panel **16** is capable of interfacing with at least one signal type. In some cases, a single Port Connector Panel **16** advantageously can be interfaced with more than one signal type, in which case LEDs are provided to indicate the Port Connector Panel **16** configuration.

Each Port Connector Panel **16** provides four External Interface Connectors **161** for two complete (full duplex) I/O channels. In an exemplary case, these channels can be NTDS Type A, B, D, or E. It should be mentioned that, due to hardware constraints, each Port Connector Panel **16** is generally configured to handle two channels of either Types A/B, Type D, or Type E. An LED on parallel versions of the Port Connector Panel **16** indicates whether the channel is Type A or Type B. Additionally, Serial Port Connector Panels **16** are labeled either Type D or Type E; they are not interchangeable. Preferably, the Input connectors on parallel Port Connector Panels **16** can be M81511/01EF-01P1 connectors while the output connectors can be M81511/01EF-01P2 connectors. Moreover, the input connectors on Type D Port Connector Panels **16** are preferably Amphenol P/N 34475-4003 where the center conductor and shield are isolated and the armor is tied to cabinet ground. In addition, the input connectors on Type E Port Connector Panels **16** advantageously can be Trompeter P/N CBBJ82, i.e., circuit board mounting equivalent of BJ80, where the center conductor and inner shield are isolated and the outer shield is tied to cabinet ground. It should be mentioned that alternative types of connectors advantageously can be employed in the MIPPSS assembly, and that all such alternative configurations are considered to be within the scope of the present invention.

Preferably, the Transceiver Board **167** illustrated in Fig. 21B can be used to establish a connection to the PI Cage **13** (See Figs. 16A and 16B.) via the PI Cage to Port Connector Panel Cable Harness **18** and the Port Connector Panel Internal Interface Connector **163**. Power to the Transceiver Board **167** is provided by the PI Cage **13** via a Port Connector Panel Power Cable Assembly **168**.

Referring to Fig. 22, the PI Rack Diagnostic Terminal **17** advantageously can be a commercially available hand-held terminal (QSI Model QTERM-II T826 in the exemplary embodiment). It has a 40-key Alpha-numeric Keypad **171**, four-line by 20-character supertwist Liquid Crystal Diode (LCD) screen **172**, and a PI Rack Interface Cable Assembly **173**. The PI Rack Diagnostic Terminal Interface Cable Assembly **173** mates to the PI Rack Diagnostic Terminal Cable Assembly Receptacle **1321** on the front of each Extender Bridge **132**. It will be appreciated that the PI Rack Interface Cable Assembly **173** has sufficient length to allow the terminal to be used from either the front or the rear of the PI Rack **1**.

As shown in Fig. 23, the PI Rack AC Power Module **113** preferably includes an AC Power Module Enclosure **1138**, which is configured with EIA-standard 19-inch flanges to facilitate the mounting of the enclosure to the PI Rack Equipment Mounting Rack **12**. The PI Rack AC Power Module **113** is a modified commercially available device available from Pulizzi Engineering (Model IPC 3302). One PI Rack AC Power Module **113** is used to supply power to each PI Rack **1**. It should be noted that the PI Rack AC Power Module **113** provides multiple AC outlets **1133** on the rear panel to supply power to other components in the PI Rack **1** via AC Power Cable Assemblies **1131**. These components include, but are obviously not limited to, both Cooling Modules **14**, both DC Power Modules **15**, and the PI Rack Exhaust Fan **112**. Advantageously, the PI Rack AC Power Module **113** contains a Main Circuit Breaker **1134** for total rack overload protection. Each outlet is protected by a Thermal Breaker **1135** with push-button reset on the front panel. Spike and surge protection is also included in each PI Rack AC Power Module **113**.

It should be mentioned that the PI Rack AC Power Module **113** advantageously can be remotely controllable via an AC Power Module Input Communications Port **1136** via two DB9 RS 232 ports, one for output and one for input, and can remotely control another AC Power Module **113** via an AC Power Module Output Communications Port **1137**. It should also be mentioned that each communications port is connected to a communications port in another AC Power Module **113/213** in a daisy chain fashion via an AC Power Module Communications Cable Assembly **1132**. Resident firmware is configured so that when power is lost, the firmware will disconnect power output so that when power comes back on, the power module will stay off. Preferably, power in the module remains off until actively re-started by either depressing the local reset button on the Thermal Breaker **1135** or receiving a remote command via the AC Power Module Input Communications Port **1136**.

It should be mentioned that the extender module **300** advantageously can be fabricated from components substantially similar to those used in building up the PI Rack 1. It will be appreciated that these components include an extender module enclosure, an ac power module, up to two extender module cages, up to two cooling modules, up to two dc power modules, and up to 32 port connector panels (serial or parallel). In light of the detailed description of corresponding components within the PI Racks, additional details of these components will not be provided.

Turning now to another portion of the MIPPSS, each Hub Rack **2** advantageously includes a Hub Rack Enclosure **21**, a Hub Equipment Mounting Rack **22**, a Hub Controller Cage **23**, a Hub Controller Personal Computer (PC) **24**, a Time-Sampled Bridge **25**, two Cooling Modules **14**, two DC Power Modules **15**, and a Hub Rack AC Power Module **213**, as shown in Figs. 24A and 24B.

Addressing the auxiliary components first, the Hub Rack Enclosure **21** includes Removable Air Filters **211** on the door (not shown) to filter air drawn into the rack by the Cooling Modules **14**. AC Power is provided to the Hub Rack via the Hub Rack Main AC Power Cable **214**. The Cooling Modules **14** and DC Power Modules **15** used in the Hub Rack **2** are identical to those used in the PI Rack **1** and their descriptions are not repeated below. The Hub Rack AC Power Module **213** is

slightly different from the PI Rack AC Power Module **113**. Additional details of the Hub Rack components are provided in the following sections.

From Figs. 24A and 24B, it will be appreciated that the front rails of the Hub Equipment Mounting Rack **22** are recessed approximately four inches back from the front of the Hub Rack Enclosure **21** to allow room for cable routing and cable connections to the Time-Sampled Bridge **25**. All of the interconnecting cables between the Hub Rack **2** and PI Racks **1** or between Hub Racks **2** enter into the Hub Rack Enclosure **21** through the bottom and are connected to the front of the Time-Sampled Bridge **25** or the Hub Controller Cage **23**. The Hub Controller Cage **23** is connected to the Extender Bridge **132** of each PI Cage **13** via a PI Cage to Hub Rack Cable Assembly **31**.

Preferably, the Time-Sampled Bridge **25** is connected to each FOT and FOR Router Board **1341/1342** of each PI Cage **13** via 16 PI Cage to Hub Rack Cable Assemblies **31**. The Hub Controller Cage **23** advantageously can be connected to the Time-Sampled Bridge **25** via the Hub Controller Cage to Time-Sampled Bridge Cable Assembly **26**. The Hub Controller Cage **23** is connected to the Hub Controller PC **24** via the Hub Controller Cage to Hub Controller PC Cable Assembly **27**. Moreover, the Hub Controller Cage **23** is preferably connected to both of the Cooling Modules **14**, both of the DC Power Modules **15**, and to the Hub Rack Exhaust Fan **212** via the Hub Rack Monitor Cable Harness **238**.

Each Cooling Module **14**, DC Power Module **15**, as well as the Hub Rack Exhaust Fan **212**, are connected to the Hub Rack AC Power Module **213** via AC Power Cable Assemblies **1131** (not individually labeled in Fig. 24B). The Hub Rack AC Power Module **213** can be connected to at least two other AC Power Modules **113/213** in the MIPPSS using an AC Power Module Communications Cable Assembly **1132**.

Referring to Fig. 25, each Hub Controller Cage **23** includes, but is not limited to, a Hub Controller Cage Enclosure **231**, up to 16 Hub to PI Cage Interface Units **232**, up to four Hub to Hub Interface Units **233**, and the Hub Controller PC Interface Unit **234**. The Hub Controller Cage

Enclosure **231** is configured with flanges to facilitate the mounting of the enclosure to the Hub Equipment Mounting Rack **22**. Power to each of the units and communications between units is provided via a Multi-Layer Backplane **235**. Each unit slides into the Hub Controller Cage **23** from the front such that the unit's rear interface connectors engage with a Backplane Mating Receptacle **2351** on the Multi-Layer Backplane **235**. Each Hub to PI Cage Interface Unit **232** is connected to one of the PI Cages **13** in the system via a PI Cage to Hub Rack Cable Assembly **31**. The PI Cage to Hub Rack Cable Assembly **31** mates to a receptacle connector located on the front panel of the Hub to PI Cage Interface Unit **232**. The Hub to PI Cage Interface Unit **232** located in the leftmost position of the Hub Controller Cage Enclosure **231** is connected to the Time-Sampled Bridge **25** via the Hub Controller Cage to Time-Sampled Bridge Cable Assembly **26** through the Multi-Layer Backplane **235**. The Hub Controller to Time-Sampled Bridge Cable Assembly **26** mates to a Hub Controller to Time-Sampled Bridge Cable Assembly Backplane Connector Adapter **2355** located on the rear of the Multi-Layer Backplane **235**. In addition, the Hub to PI Cage Interface Unit **232** located in the leftmost position of the Hub Controller Cage Enclosure **231** is connected to both Cooling Modules **14**, both DC Power Modules **15**, and the Hub Rack Exhaust Fan **212** via the Hub Rack Monitor Cable Harness **238** through the Multi-Layer Backplane **235**. The Hub Rack Monitor Cable Harness **238** mates to a Hub Rack Monitor Harness Cable Assembly Backplane Connector Adapter **2358** located on the rear of the Multi-Layer Backplane **235**.

It should be mentioned that each Hub to Hub Interface Unit **233** is connected to a Hub to Hub Interface Unit **233** in a different Hub Rack **2** via a Hub-to-Hub Data/Control Communications Cable Assembly **91/92**, which mates to a receptacle located on the front panel of the Hub to Hub Interface **233**. The Personal Computer Interface Unit **234** is connected to the Personal Computer (PC) **24** via the Hub Controller Cage to PC Cable Assembly **27** and a front-mounted PC Interface Receptacle **271** on the card. Preferably, the Hub to PI Cage Interface Units **232**, the Hub to Hub Interface Units **233**, and the Personal Computer Interface Unit **234** all have front mounted LED indicators **2300** that display the status of the unit. The Hub to PI Cage Interface Units **232** and the Hub to Hub Interface Units **233** can be disengaged from the Multi-Layer Backplane **235** while power is applied to the Hub Controller Cage **23** and the Hub Controller Cage **23** is operating. It should be mentioned that power

to the Multi-Layer Backplane **235** is provided by the DC Power Module **15** via the Hub Controller Cage Power Cable Assembly **239**.

Referring now to Fig. 26, the Hub Controller Personal Computer (PC) **24**, in an exemplary embodiment, is manufactured by Industrial Computer Source (Model 8630P-RV-10). The Hub Controller PC **24** includes, in an exemplary minimum configuration, a Hub Controller PC Enclosure **241**, an integrated 9-inch VGA color Video Monitor **242**, two 1-GB removable, hot-swappable Hard Drive Modules **243**, 5-slot ISA, 2-slot PCI backplane, a slide-out Keyboard **244**, a 166 MHz Pentium-based Central Processing Unit (CPU) **245**, and assorted electronics. The Hub Controller PC **24** is also outfitted with a 3Com EtherLink III network adapter (Model 3C509BC), a four-channel serial communications adapter, and Windows device driver (Model WINCOMM4).

As should be understood from the discussions above, the Hub Controller PC Enclosure **241** and the slide-out Keyboard Tray **2441** are configured with flanges to facilitate the mounting to the Hub Equipment Mounting Rack **22**. The Hub Controller PC **24** advantageously can be connected to the Hub Controller Cage via the Hub Controller Cage to Hub Controller PC Cable Assembly **27**. The Hub Controller Cage to Hub Controller PC Cable Assembly **27** mates to a connector receptacle located on the rear of the Hub Controller PC **24**. Preferably, two control cables provide communication with higher-level switching control hardware; the Ethernet Switching System Control Cable **247** and the RS-232 Switching System Control Cable **248**. The Hub Controller PC **24** draws AC power from the Hub Rack AC Power Module **213** via the AC Power Cord **2131**.

The Time-Sampled Bridge Cage **25** illustrated in Fig. 27 preferably includes a Time-Sampled Bridge Cage Enclosure **251** and up to 17 Time-Sampled Bridge Boards **252**. The Time-Sampled Bridge Enclosure **251** is configured with flanges to facilitate the mounting of the enclosure to the Hub Equipment Mounting Rack **22**. Power to each of the units and communications between units is provided via a Multi-Layer Backplane **253**. Each Time-Sampled Bridge Board **252** slides into the Time-Sampled Bridge Cage **25** from the front such that the unit's rear interface connectors engage with a Backplane Mating Receptacle **2531** on the Multi-Layer Backplane **253**. More importantly,

each Time-Sampled Bridge Board **252** is connected to the FOT Router Board **1341** and the FOR Router Board **1342** of up to 16 PI Cages **13** via PI Cage to Hub Rack Cable Assemblies **31**. The PI Cage to Hub Rack Cable Assemblies **31** enter the front of the Time-Sampled Bridge Board **252** and mate to receptacles located internal to the unit. In addition, the Time-Sampled Bridge Board **252** located in the leftmost position (slot 1) of the Time-Sampled Bridge Cage **25** is connected to the Hub Controller Cage via the Hub Controller to Time-Sampled Bridge Cable Assembly **26** through the Multi-Layer Backplane **253** via an adapter located on the rear of the Multi-Layer Backplane **253**. The Time-Sampled Bridge Boards **252**, in an exemplary embodiment, have front-mounted LED indicators **2500** that display the status of the unit. It should be noted that a Time-Sampled Bridge Board **252** can be disengaged from the Multi-Layer Backplane **253** while power is applied to the Time-Sampled Bridge Cage **25**, i.e., while the Time-Sampled Bridge **25** is operating. The Time-Sampled Bridge Cage **25** draws power from the DC Power Module **15**.

Referring to Fig. 28, the Hub Rack AC Power Module **213** preferably includes an AC Power Module Enclosure **2138** which is configured with EIA-standard 19-inch flanges to facilitate mounting of the enclosure to the Hub Equipment Mounting Rack **22**. The Hub Rack AC Power Module **213** is a modified commercially available from Pulizzi Engineering (model IPC 3302). One Hub Rack AC Power Module **213** can be used to supply power to each Hub Rack **2**. More specifically, the Hub Rack AC Power Module **213** provides multiple AC outlets **2133** on the rear panel which supply power to other components in the Hub Rack **2** via AC Power Module Cable Assemblies **2131**. These components include, but are not limited to, both Cooling Modules **14**, both DC Power Modules **15**, the Hub Controller PC **24**, and the Hub Rack Exhaust Fan **212**. The Hub Rack AC Power Module **213** advantageously contains a Main Circuit Breaker **2134** for total rack overload protection. Each outlet is protected by a Thermal Breaker **2135** with push-button reset on the front panel. Spike suppression and surge protection capabilities advantageously are included in each Hub Rack AC Power Module **213**.

It should be noted that the Hub Rack AC Power Module **213** is remotely controllable via an AC Power Module Input Communications Port **2136** via two DB9 RS 232 ports, one for output and

one for input, and can remotely control another AC Power Module **213** via an Output Communications Port **2137**. Each communications port is preferably connected to a communications port in another AC Power Module **113/213** in a daisy chain fashion via an AC Power Module Communications Cable Assembly **2132**. Advantageously, resident firmware can be configured so that when power is lost, the firmware will disconnect power output so that when power comes back on, the power module will stay off. Power in the module remains off until actively re-started by either depressing the local reset button on the Thermal Breakers **2135** or receiving remote command via the Input Communications Port **2136**.

Having discussed the most numerous components in the MIPPSS, a detailed discussion of the overall operation of the MIPPSS, particularly with respect to signal delivery, will now be presented.

In general, when a user requests a connection from one device or system to another device or system, it will be appreciated that there are multiple possible paths through which that connection can be established. The MIPPSS evaluates available system resources and establishes a connection using the system resources that minimize latencies introduced by the connection. Alternatively, the UCC **2a** can be programmed to implement a variety of other signal path selection algorithms, e.g., it can select the signal path having either the lowest latency or the lowest PBER, or an optimum combination of values of these two parameters (as prescribed by the algorithm). Once a path is selected, it is verified and, once verified, it is established and it remains established until released by a switch control signal, via software commands from UCC **2a**. The discussion presented immediately below will describe the propagation of a signal through each of the possible path options. It should be noted that all of Figs. 29 through 48 are functional, not physical, representations. For ease of presentation, intra-hub paths will be described before inter-hub paths are discussed.

First, it will be appreciated that intra-hub paths refer to serial and parallel signal paths available through the MIPPSS which utilize only one Hub Rack **2**, including cases where the signal

is handled entirely within the Quad PI Board **133**, within the PI Cage **13** and, thus, wholly within the PI Rack **1**. Signal paths which utilize a second Hub Rack **2** are described in greater detail thereafter.

It should first be mentioned that two users or systems that interface with the MIPPSS through the same Quad PI Board **133** can be connected within that Quad PI Board **133**. As illustrated in Fig. 29, parallel signals enter into the MIPPSS through the Port Connector Panel External Interface Connector **161** on the Port Connector Panel **16**. The signals are translated to TTL levels by a Parallel TTL Converter **162P** and transferred to the Quad PI Board **133** via the Port Connector Panel Internal Interface Connector **163** and the PI Cage to Port Connector Panel Cable Harness **18**. The parallel TTL signals enter the Quad PI Board **133** via the PI Cage to Port Connector Panel Cable Assembly Backplane Connector Adapter **1362** and are delivered to inputs of the Matrix Switch **1331P**, which advantageously can, but need not, be an 12x4xN matrix switch, where N is the number of parallel TTL signals. The parallel TTL signals are preferably delivered to the appropriate outputs of the Matrix Switch **1331P** and then back to the PI Cage to Port Connector Panel Cable Assembly Backplane Connector Adapter **1362**. The parallel TTL signals are then transferred to the output Port Connector Panel **16** via the PI Cage to Port Connector Panel Cable Harness **18**. The parallel TTL signals enter the Port Connector Panel **16** via the Port Connector Panel Internal Interface Connector **163** and are delivered to the external Parallel Interface Driver **164**, where they are conditioned for transmission. Finally, the conditioned parallel signals exit the MIPPSS through the Port Connector Panel External Interface Connector **161**. The above-described process takes approximately 50 nanoseconds (ns).

Serial signals are handled in a different manner. Referring to Fig. 30, the serial signal enters into the MIPPSS through the External Interface Connector **161** on the Port Connector Panel **16**. Preferably, the serial signal is translated to TTL levels by the Serial TTL Converter **162S** and transferred to the Quad PI Board **133** via the Port Connector Panel Internal Interface Connector **163** and the PI Cage to Port Connector Panel Cable Harness **18**. The serial TTL signal enters the Quad PI Board **133** via the PI Cage to Port Connector Panel Cable Assembly Backplane Connector

Adapter **1362** and is delivered to the Serial to Parallel Converter **1335** where the serial TTL signal is decoded into parallel TTL level signals. The parallel TTL signals are delivered to the appropriate output of the Matrix Switch **1331S** and then delivered to the Parallel to Serial Converter **1336** and the single serial TTL signal is delivered back to the PI Cage to Port Connector Panel Cable Assembly Backplane Connector Adapter **1362**. The serial TTL signal is then transferred to the destination Port Connector Panel **16** via the PI Cage to Port Connector Panel Cable Harness **18**. The serial TTL signal enters the Port Connector Panel **16** via the Port Connector Panel Internal Interface Connector **163** and is delivered to the external Serial Interface Driver **165** where it is conditioned for transmission. Finally the conditioned serial signal exits the MIPPSS through the Port Connector Panel External Interface Connector **161**. It should be mentioned that this entire process takes approximately 350 ns.

The next possibility, i.e., that two users or systems which interface with the MIPPSS through different Quad PI Boards **133** in the same PI Cage **13** and, thus, can be connected within the PI Cage **13** using the Cage Router Board **135**, will now be described. As in the discussion above, parallel and serial signal paths will each be discussed in turn.

Referring now to Fig. 31, parallel signals enter into the MIPPSS through the External Interface Connector **161** on the Port Connector Panel **16**. The parallel signals are translated to TTL levels by the Parallel TTL Converter **162P** and transferred to the sending/originating Quad PI Board **133** via the Port Connector Panel Internal Interface Connector **163** and the PI Cage to Port Connector Panel Cable Harness **18**. The parallel TTL signals enter the Quad PI Board **133** via the PI Cage to Port Connector Panel Cable Assembly Backplane Connector Adapter **1362** and are delivered to the Parallel to Serial Converter/Serial Line Driver **1332** where the parallel TTL signals advantageously are sampled and converted into a Positive Emitter-Coupled Logic (PECL) serial signal. The PECL serial signal is delivered to the Quad PI Board Backplane Mating Receptacle **1333** and then onto the PI Cage Multi-Layer Backplane **136**.

Preferably, the PECL serial signal enters the PI Cage Router Board **135** via the PI Cage Router Board Backplane Connector **1351** and is delivered to an input of, for example, a 64x32 Matrix Switch **1352**. The PECL serial signal is delivered to the appropriate output of the Matrix Switch **1352** and then onto the PI Cage Multi-Layer Backplane **136** through the PI Cage Router Board Backplane Connector **1351**. The PECL serial signal is delivered through the PI Cage Multi-Layer Backplane **136** and enters the destination Quad PI Board **133** through the Quad PI Board Backplane Mating Receptacle **1333** / Backplane Receptacle **1361**. The PECL serial signal is delivered to the Serial to Parallel Converter/TTL Parallel Line Driver **1334**, where the PECL serial signal is converted back to parallel TTL level signals, and then the parallel TTL signal is delivered back to the PI Cage to Port Connector Panel Cable Assembly Backplane Connector Adapter **1362**. The parallel TTL signals are then transferred to the destination Port Connector Panel **16** via the PI Cage to Port Connector Panel Cable Harness **18**. The parallel TTL signals enter the Port Connector Panel **16** via the Port Connector Panel Internal Interface Connector **163** and are delivered to the external Parallel Interface Driver **164** where they are conditioned for transmission. Finally the conditioned parallel signals exit the MIPPSS through the Port Connector Panel External Interface Connector **161**. It should be noted that this entire process takes approximately 200 ns.

Referring to Fig. 32, the serial signal enters into the MIPPSS through the External Interface Connector **161** on the Port Connector Panel **16**. The serial signal is translated to TTL levels by the Serial TTL Converter **162S** and transferred to the Quad PI Board **133** via the Port Connector Panel internal Interface Connector **163** and the PI Cage to Port Connector Panel Cable Harness **18**. The serial TTL signal enters the Quad PI Board **133** via the PI Cage to Port Connector Panel Cable Assembly Backplane Connector Adapter **1362** and is delivered to the Serial to Parallel Converter **1335** where the serial TTL signal is decoded into parallel TTL level signals. Advantageously, the parallel TTL signals are then delivered to the Parallel to Serial Converter/Serial Line Driver **1332** where they are sampled and converted into a PECL serial signal. The PECL serial signal is delivered to the Quad PI Board Backplane Mating Receptacle **1333** and then onto the PI Cage Backplane **136**. The PECL serial signal is delivered through the PI Cage Backplane **136** and enters the PI Cage Router Board **135** via the PI Cage Router Board Backplane Connector **1351** and is delivered to an

input of, for example, a 64x32, Matrix Switch **1352**. The PECL serial signal is delivered to the appropriate output of the Matrix Switch **1352** and then onto the PI Cage Backplane **136** through the PI Cage Router Board Backplane Connector **1351**. The PECL serial signal is routed through the PI Cage Backplane **136** and enters the destination Quad PI Board **133** through the Quad PI Board Backplane Mating Receptacle **1333**.

Furthermore, the PECL serial signal is delivered to the Serial to Parallel Converter/TTL Parallel Line Driver **1334**, where the PECL serial signal is converted back to parallel TTL level signals. The parallel TTL signals are delivered to the Parallel to Serial Converter **1336** and the single serial TTL signal is delivered back to the PI Cage to Port Connector Panel Cable Assembly Backplane Connector Adapter **1362**. The serial TTL signal is then transferred to the destination Port Connector Panel **16** via the PI Cage to Port Connector Panel Cable Harness **18**. The serial TTL signal enters the Port Connector Panel **16** via the Port Connector Panel Internal Interface Connector **163** and is delivered to the external Serial Interface Driver **165** where it is conditioned for transmission. Finally the conditioned serial signal exits the MIPPSS through the Port Connector Panel External Interface Connector **161**. This entire process takes approximately 350 ns.

The next connection possibility involves signals which are routed via intra-PI Rack paths, within one PI Rack **1** but between two different PI Cages **13**. In other words, two users or systems that interface with MIPPSS through Quad PI Boards **133** in different PI Cages **13** within a single PI Rack **1** can be connected within the PI Rack **1** using the Cage Router Boards **135**.

Referring to Fig. 34, parallel signals enter into the MIPPSS through the External Interface Connector **161** on the Port Connector Panel **16**. The parallel signals are translated to TTL levels by the Parallel TTL Converter **162P** and transferred to the Quad PI Board **133** via the Port Connector Panel Internal Interface Connector **163** and the PI Cage to Port Connector Panel Cable Harness **18**. The parallel TTL signals enter the Quad PI Board **133** via the PI Cage to Port Connector Panel Cable Assembly Backplane Connector Adapter **1362** and are delivered to the Parallel to Serial Converter/Serial Line Driver **1332** where the parallel TTL signals are sampled and converted into

a PECL serial signal. Preferably, the PECL serial signal is delivered to the Quad PI Board Backplane Mating Receptacle **1333** and then onto the PI Cage Backplane **136**. The PECL serial signal enters the PI Cage Router Board **135** via the PI Cage Router Board Backplane Connector **1351** and is delivered directly to the PI Cage to PI Cage Cable Assembly Backplane Connector Adapter **1363** and into to the PI Cage to PI Cage Cable Assembly **19**. The PECL serial signal enters the PI Cage Router Board **135** of the destination PI Cage **13** via the PI Cage to PI Cage Cable Assembly Backplane Adapter **1363** and is delivered to an input of a Matrix Switch **1352**, which in a preferred embodiment is a 64x32 matrix switch. The PECL serial signal is delivered to the appropriate output of the Matrix Switch **1352** and then onto the destination PI Cage Backplane **136** through the PI Cage Router Board Backplane Connector **1351**. The PECL serial signal is delivered through the PI Cage Backplane **136** and enters the destination Quad PI Board **133** through the Quad PI Board Backplane Mating Receptacle **1333**. The PECL serial signal is delivered to the Serial to Parallel Converter/TTL Parallel Line Driver **1334**, where the PECL serial signal is converted back to parallel TTL level signals, and then the parallel TTL signal is delivered back to the PI Cage to Port Connector Panel Cable Assembly Backplane Connector Adapter **1362**. The parallel TTL signals are then transferred to the output Port Connector Panel **16** via the PI Cage to Port Connector Panel Cable Harness **18**. The parallel TTL signals enter the Port Connector Panel **16** via the Port Connector Panel Internal Interface Connector **163** and are delivered to the external Parallel Interface Driver **164** where they are conditioned for transmission. Finally the conditioned parallel signals exit the MIPPSS through the Port Connector Panel External Interface Connector **161**. This entire process takes approximately 200 ns.

In contrast, the delivery of serial signals is performed as illustrated in Fig 35, wherein the serial signal enters into the MIPPSS through the External Interface Connector **161** on the Port Connector Panel **16**. The serial signal is then translated to TTL levels by the Serial TTL Converter **162S** and transferred to the Quad PI Board **133** via the Port Connector Panel Internal Interface Connector **163** and the PI Cage to Port Connector Panel Cable Harness **18**. The serial TTL signal subsequently enters the Quad PI Board **133** via the PI Cage to Port Connector Panel Cable Assembly Backplane Connector Adapter **1362** and is delivered to the Serial to Parallel Converter **1335** where

the serial TTL signal is decoded into parallel TTL level signals. The parallel TTL signals are then delivered to the Parallel to Serial Converter/Serial Line Driver **1332**, where they are sampled and converted into a PECL serial signal. The PECL serial signal is delivered to the Quad PI Board Backplane Mating Receptacle **1333** and then onto the PI Cage Backplane **136**.

Preferably, the PECL serial signal is delivered through the PI Cage Multi-Layer Backplane **136** and enters the PI Cage Router Board **135** via the PI Cage Router Board Backplane Connector **1351** and is delivered directly to the PI Cage to PI Cage Cable Assembly Backplane Connector Adapter **1363** and into the PI Cage to PI Cage Cable Assembly **19**. The PECL serial signal enters the PI Cage Router Card **135** of the destination PI Cage **13** via the PI Cage to PI Cage Cable Assembly Backplane Adapter **1363** and is delivered to an input of a Matrix Switch **1352,** which advantageously can be a 64x32 matrix switch. The PECL serial signal is delivered to the appropriate output of the Matrix Switch **1352** and then onto the destination PI Cage Multi-Layer Backplane **136** through the PI Cage Router Board Backplane Connector **1351**. The PECL serial signal is delivered through the PI Cage Multi-Layer Backplane **136** and enters the destination Quad PI Board **133** through the Quad PI Board Backplane Mating Receptacle **1333**. The PECL serial signal is delivered to the Serial to Parallel Converter/TTL Parallel Line Driver **1334**, where the PECL serial signal is converted back to parallel TTL level signals. The parallel TTL signals are delivered to the Parallel to Serial Converter **1336** and the single serial TTL signal delivered back to the PI Cage to Port Connector Panel Cable Assembly Backplane Connector Adapter **1362**. The serial TTL signal is then transferred to the output Port Connector Panel **16** via the PI Cage to Port Connector Panel Cable Harness **18**. The serial TTL signal enters the Port Connector Panel **16** via the Port Connector Panel Internal Interface Connector **163** and is delivered to the external Serial Interface Driver **165** where it is conditioned for transmission. Finally the conditioned serial signal exits the MIPPSS through the Port Connector Panel External Interface Connector **161**. This entire process takes approximately 350 ns.

The remaining interconnection possibilities involve inter-PI Rack paths. In such cases, two users or systems that interface with the MIPPSS through Quad PI Boards **133** in different PI Racks

1 connected to a single Hub Rack **2** can be connected using the Time-Sampled Bridge **25** within the Hub Rack **2**. The overall connection path is illustrated in Fig. 35. The parallel signal paths will be addressed first.

As illustrated in Fig. 35, parallel signals enter into the MIPPSS through the External Interface Connector **161** on the Port Connector Panel **16**. The parallel signals advantageously are translated to TTL levels by the Parallel TTL Converter **162P** and transferred to the Quad PI Board **133** via the Port Connector Panel Internal Interface Connector **163** and the PI Cage to Port Connector Panel Cable Harness **18**. The parallel TTL signals enter the Quad PI Board **133** via the PI Cage to Port Connector Panel Cable Assembly Backplane Connector Adapter **1362** and are delivered to the Parallel to Serial Converter/Serial Line Driver **1332** where the parallel TTL signals are sampled and converted into a PECL serial signal. The PECL serial signal is delivered to the Backplane Mating Receptacle **1333** and then onto the PI Cage Backplane **136**.

It should be noted that there are four possible paths between the origin PI Rack and the Hub Rack. As shown in the upper portion of Figure 35, the PECL serial signal is converted to a fiber optic serial signal and delivered to the Hub Rack **2** using one of the four following paths:

(1) The PECL serial signal enters the FOT Router Board **1341** via the FOT Router Board Backplane Connector **13411** and is delivered to an input of a Matrix Switch **13412,** which preferably is a 64x32 matrix switch in the exemplary embodiment. See Fig. 36. The PECL serial signal is then delivered to the appropriate output of the Matrix Switch **13412** and to a Fiber Optic Serial Transmitter (FOST) **13413** where it is converted to a fiber optic serial signal and transferred through one fiber of a PI Cage to Hub Rack Cable Assembly **31** to the Fiber Optic Serial Receiver (FOSR) **2522** of a Time-Sampled Bridge Board **252** in the Time-Sampled Bridge **25** of the Hub Rack **2**.

(2) The PECL serial signal enters the FOT Router Board **1341** via the FOT Router Board backplane connector **13411** and is delivered to an input of a Matrix Switch **13412**, which preferably is a 64x32 matrix switch in the exemplary embodiment. See Fig. 37. The PECL serial signal is then delivered to the appropriate output of the Matrix Switch **13412** and then onto the Multi-Layer Backplane **136** through the FOT Router Board Backplane Connector **13411**. The PECL serial signal is delivered through the Multi-Layer Backplane **136** and enters the FOR Router Board **1342** through the FOR Router Board Backplane Connector **13421**. The PECL serial signal is delivered to a Fiber Optic Serial Transmitter (FOST) **13423** where it is converted to a fiber optic serial signal and transferred through one fiber of a PI Cage to Hub Rack Cable Assembly **31** to the Fiber Optic Serial Receiver (FOSR) **2522** of a Time-Sampled Bridge Board **252** of the Time-Sampled Bridge **25** of the Hub Rack **2**.

(3) The PECL serial signal enters the FOT Router Board **1341** via the FOT Router Board backplane connector **13411** and is delivered to a PI Cage to PI Cage cable assembly backplane connector adapter **1365**. See Fig. 38. The PECL serial signal is transferred to a secondary FOT Router Board **1341** via the PI Cage to PI Cage Cable Assembly **19**. The PECL serial signal enters the secondary FOT Router Board **1341** through the PI Cage to PI Cage Cable Assembly Backplane Connector Adapter **1365** and is delivered to an input of a Matrix Switch **13412**, which advantageously can be a 64x32 matrix switch in the exemplary embodiment. The PECL serial signal is then delivered to the appropriate output of the Matrix Switch **13412** and to a Fiber Optic Serial Transmitter (FOST) **13413** where it is converted to a fiber optic serial signal and transferred through one fiber of a PI Cage to Hub Rack Cable Assembly **31** to the Fiber Optic Serial Receiver (FOSR) **2522** of a Time-Sampled Bridge Board **252** of the Time-Sampled Bridge **25** of the Hub Rack **2**.

(4) The PECL serial signal enters the primary FOT Router Board **1341** via the FOT Router Board Backplane Connector **13411** and is delivered directly to a PI Cage to

PI Cage Cable Assembly Backplane Connector Adapter **1365**. See Fig. 39. The PECL serial signal is transferred to a secondary FOT Router Board **1341** via the PI Cage to PI Cage Cable Assembly **19**. The PECL serial signal enters the secondary FOT Router Board **1341** through the PI Cage to PI Cage Cable Assembly Backplane Connector Adapter **1365** and is delivered to an input of a Matrix Switch **13412**, which advantageously can be a 64x32 matrix switch in the exemplary embodiment. The PECL serial signal is then delivered to the appropriate output of the Matrix Switch **13412** and to the FOT Router Board Backplane Connector **13411**. The PECL serial signal is transferred through the Backplane **136** to the FOR Router Board **1342** and enters the FOR Router Board **1342** through the FOR Router Board Backplane Connector **13421**. The PECL serial signal is delivered to a Fiber Optic Serial Transmitter (FOST) **13423** where it is converted to a fiber optic serial signal and transferred through one fiber of a PI Cage to Hub Rack cable assembly **31** to the Fiber Optic Serial Receiver (FOSR) **2522** of a Time-Sampled Bridge Board **252** of the Time-Sampled Bridge **25** of the Hub Rack **2**.

The switching that occurs within the Hub Rack **2** will now be described while referring to Fig. 40, wherein the fiber optic serial signal enters the Fiber Optic Serial Receiver (FOSR) **2522** of a Time-Sampled Bridge Board **252** of the Time-Sampled Bridge **25** of the Hub Rack **2** where it is converted back to a PECL serial signal. The PECL serial signal is delivered to a selected input of a Matrix Switch **2523**, and through the, for example, 32x32, Matrix Switch **2523** to the appropriate output, and then to a FOST **2524** where the signal is converted to a fiber optic serial signal and transferred through one fiber of a PI Cage to Hub Rack Cable Assembly **31**.

The input PI Rack **1** includes four possible signal paths to the Hub Rack **2**, and the output PI Rack **1** includes four complementary signal paths from the Hub Rack **2**. As shown in the lower portion of Fig. 40, the fiber optic serial signal advantageously can be converted to a PECL serial signal and delivered to the destination PI Cage backplane **136** using one of the four following paths:

(1) The fiber optic serial signal enters the destination PI Cage **13** via the FOSR **13424** of a FOR Router Board **1342** where it is converted back to a PECL serial signal and delivered to an input of a Matrix Switch **13422**, which advantageously can be a 64x32 matrix switch. See Fig. 41. The PECL serial signal is delivered to the appropriate output of the Matrix Switch **13422** and then onto the destination PI Cage backplane **136** through the FOR Router Board Backplane connector **13421**.

(2) The fiber optic serial signal enters the destination PI Cage **13** via the FOSR **13414** of an FOT Router Board **1341** where it is converted back to a PECL serial signal and delivered to the FOT Router Board Backplane Connector **13411**. See Fig. 42. The PECL serial signal is transferred to the FOR Router Board **1342** via the FOT Router Board Backplane Connector **13411** and enters the FOR Router Board **1342** through a FOR Router Board Backplane Connector **13421**. The PECL serial signal is delivered to an input of a Matrix Switch **13422**, which advantageously can be a 64x32 matrix switch in the exemplary embodiment, to the appropriate output of the Matrix Switch **13422** and then onto the destination PI Cage Backplane **136** through the FOR Router Board Backplane Connector **13421**.

(3) The fiber optic serial signal enters the secondary PI Cage **13** via the FOSR **13424** of a FOR Router Board **1342** where it is converted back to a PECL serial signal and delivered to the PI Cage to PI Cage Cable Assembly Backplane Connector Adapter **1365** and transferred to the destination FOR Router Board **1342** via the PI Cage to PI Cage Cable Assembly **19**. See Fig. 43. The PECL serial signal enters the destination FOR Router Board **1342** through the PI Cage to PI Cage Cable Assembly Backplane Connector Adapter **1365** and is delivered to an input of a Matrix Switch **13422**, which advantageously can be a 64x32 matrix switch. The PECL serial signal is delivered to the appropriate output of the Matrix Switch **13422** and then onto the destination PI Cage Backplane **136** through the Fiber Optic Receive Router Board Backplane Connector **13421**.

(4) The fiber optic serial signal enters the secondary PI Cage **13** via the FOSR **13414** of a FOT Router Board **1341** where it is converted back to a PECL serial signal and delivered to the FOT Router Board Backplane Connector **13411**. See Fig. 44. The PECL serial signal is transferred to a preliminary FOR Router Board **1342** via the Backplane **136** and enters the preliminary FOR Router Board **1342** through a FOR Router Board Backplane Connector **13421**. The PECL serial signal is delivered directly to the PI Cage to PI Cage Cable Assembly Backplane Connector Adapter **1365** and transferred to the destination FOR Router Board **1342** via the PI Cage to PI Cage Cable Assembly **19**. The PECL serial signal enters the destination FOR Router Board **1342** through the PI Cage to PI Cage Cable Assembly Backplane Connector Adapter **1365** and is delivered to an input of a Matrix Switch **13422**, which advantageously can be a 64x32 matrix switch. The PECL serial signal is delivered to the appropriate output of the Matrix Switch **13422** and then onto the destination PI Cage Backplane **136** through the FOR Router Board Backplane Connector **13421**.

Referring back to Fig. 40, the PECL serial signal is routed through the PI Cage Backplane **136** and enters the destination Quad PI Board **133** through the Quad PI Board Backplane Mating Receptacle **1333**. The PECL serial signal is delivered to the Serial to Parallel Converter/TTL Line Driver **1334**, where the PECL serial signal is converted back to parallel TTL level signals, and then the parallel TTL signals are delivered back to the PI Cage to Port Connector Panel Cable Assembly Backplane Connector Adapter **1362**. The parallel TTL signals are then transferred to the destination Port Connector Panel **16** via the PI Cage to Port Connector Panel Cable Harness **18**. The parallel TTL signals enter the Port Connector Panel **16** via the Port Connector Panel internal interface connector **163** and are delivered to the external Parallel Interface Driver **164** where they are conditioned for transmission. Finally the conditioned parallel signals exit the MIPPSS through the Port Connector Panel External Interface Connector **161**. This entire process takes approximately 220 ns excluding inter-rack cable delays.

Having discussed the various options for inter-PI Rack delivery of parallel signals, the various options for inter-PI Rack delivery of serial signals will now be described with reference to Fig. 45, wherein the serial signal enters into the MIPPSS through the external interface connector **161** on the Port Connector Panel **16**. The serial signal is then translated to TTL levels by the Serial TTL Converter **162S** and transferred to the Quad PI Board **133** via the Port Connector Panel Internal Interface Connector **163** and the PI Cage to Port Connector Panel Cable Harness **18**. The serial TTL signal subsequently enters the Quad PI Board **133** via the PI Cage to Port Connector Panel Cable Assembly Backplane Connector Adapter **1362** and is delivered to the Serial Decoder **1335**, where the serial TTL signal is then decoded into parallel TTL level signals. The parallel TTL signals are finally delivered to the Parallel to Serial Converter/Serial Line Driver **1332**, where they are sampled and converted into a PECL serial signal. The PECL serial signal advantageously can then be delivered to the Quad PI Board Backplane Mating Receptacle **1333** and then onto the PI Cage Backplane **136**.

It will be noted from Fig. 45 that the PECL serial signal can then be transferred to the Hub Rack via four possible paths as previously described above. Moreover, it will be noted that the switching performed in Hub Rack **2** was previously described above and, in the interest of brevity, will not be described again. In addition, the PECL serial signal can then be transferred from the Hub Rack **2** via four possible paths previously described above. The only portion of the signal path not yet discussed is the final signal conditioning, which is described immediately below.

The PECL serial signal is routed through the PI Cage backplane **136** and enters the destination Quad PI Board **133** through the Quad PI Board Backplane Mating Receptacle **1333**. See Fig. 46. The PECL serial signal is delivered to the Serial to Parallel Converter/TTL Line Driver **1334**, where the PECL serial signal is converted back to parallel TTL level signals. The parallel TTL signals are delivered to the Parallel to Serial Converter **1336** and the resultant single serial TTL signal delivered back to the PI Cage to Port Connector Panel cable assembly backplane connector adapter **1362**. The serial TTL signal is then transferred to the destination Port Connector Panel **16** via the PI Cage to Port Connector Panel cable harness **18**. The serial TTL signal enters the Port

Connector Panel **16** via the Port Connector Panel internal interface connector **163** and is delivered to the external Serial Interface Driver **165** where it is conditioned for transmission. Finally the conditioned serial signal exits the MIPPSS through the Port Connector Panel External Interface Connector **161**. This entire process takes approximately 370 ns, excluding inter-rack cable delays.

Although all of the basic signal paths for an exemplary MIPPSS have now been described in detail, it will be appreciated that Fig. 15 illustrates an expanded configuration wherein a pair of Hub Racks **2** are employed advantageously. Thus, it is necessary to describe one additional path, i.e., an Inter-Hub path, since two users or systems that interface with the MIPPSS through Quad PI Boards **133** in different PI Racks **1** connected to different Hub Racks **2** can be connected using the Time-Sampled Bridges **25** within the Hub Racks **2**, as shown in Fig. 47. Since both parallel and serial signals have been converted to fiber optic serial signals prior to hub-to-hub transfer, there is no need to cover the specifics of parallel and serial signal path processing. Signal switching between the Hub Racks is handled in the following manner:

(1) Switching at Origin Time-Sampled Bridge. As shown in Fig, 47, the fiber optic serial signal enters the Fiber Optic Serial Receiver (FOSR) **2522** of a Time-Sampled Bridge Board **252** of the Time-Sampled Bridge **25** of the Origin Hub Rack **2** where it is converted back to a PECL serial signal. The PECL serial signal is delivered to an input of a Matrix Switch **2523**, through the Matrix Switch **2523** to the appropriate output, and then to a FOST **2524** where the signal is converted to a fiber optic serial signal and transferred through one fiber of the Hub to Hub Data Communications Cable Assembly **91**.

(2) Switching at Destination Time-Sampled Bridge. Still referring to Fig. 47, the fiber optic serial signal enters the Fiber Optic Serial Receiver (FOSR) **2522** of a Time-Sampled Bridge Board **252** of the Time-Sampled Bridge **25** of the Destination Hub Rack **2** where it is converted back to a PECL serial signal. The PECL serial signal is delivered to an input of a Matrix Switch **2523**, through the, for example, 32x32,

Matrix Switch **2523** to the appropriate output, and then to a FOST **2524** where the signal is converted to a fiber optic serial signal and transferred through one fiber of the PI Cage to Hub Rack Cable Assembly **31**.

The switching actions of the MIPPSS are controlled from the Hub Controller Personal Computer (PC) **24** located in the Hub Rack **2** or the PI Rack Diagnostic Terminal **17**, which is ultimately under the control of the UCC **2a** (controller), e.g., via a prescribed set of software-generated commands. There are three possible points to initiate a switch action for the MIPPSS and three possible paths for a command to reach a PI Rack **1**. First, it is possible to initiate a switch action from (1) a central switching computer that is separate from the MIPPSS, (2) a Hub Controller PC **24** within a Hub Rack **2**, or (3) a PI Rack Diagnostic Terminal **17**. Second, any switch actions for the MIPPSS must be transmitted from one or more Hub Controller PCs **24** and/or the PI Rack Diagnostic Terminal **17**.

When a central switching computer, i.e., the UCC **2a**, is used to control the switching actions of the MIPPSS, it need only be connected to one Hub Rack **2**, designated the master Hub Rack. The Serial Port of the Hub Controller PC **24** in the master Hub Rack **2** connects to the UCC **2a** directly via two Ethernet or five RS-232 cables. The commands from the UCC **2a** and the responses from the master Hub Rack **2** comply with a common interface protocol that is adaptable in MIPPSS software. Once the master Hub Rack **2** has received a command, it passes that command to the pertinent PI Cage **13** or the slaved Hub Rack **2** for further action. This process will be discussed in greater detail below.

Additionally, switch actions advantageously can be initiated at the Hub Rack by entering the desired command into the keyboard **244** of the Hub Controller PC **24**. The command is also displayed on the integrated video monitor **242** of the Hub Controller PC. It will be appreciated that the entered command must conform with the available set of MIPPSS commands. It is also possible to enter a command via the PI Rack diagnostic terminal **17**. When a PI Rack **1** has been designated as available for maintenance, either by a UCC **2a** or a Hub Controller PC **24**, that PI Rack **1** can take

commands from either a Hub Controller PC **24** or directly from a PI Rack Diagnostic Terminal **17**. It should be mentioned here that when commands for that PI Rack **1** are received from a UCC **2a**, the PI Rack **1** will be declared as unavailable for use.

As previously mentioned, any switch actions for the MIPPSS are primarily transmitted from one or more Hub Controller PCs **24** and/or the PI Rack Diagnostic Terminal **17**. Once a command has reached the Hub Controller PC **24**, from the Hub Controller PC keyboard **244** or the UCC **2a**, it must be interpreted. The Hub Controller PC **24** determines which PI Cage(s) **13** the Port Connector Panels **16** required to establish a selected connection are in, which Hub Rack **2** the PI Cage **13** required to establish the selected connection is connected to, and what switch actions must take place.

When the affected PI Cage **13** is directly connected to that Hub Rack **2**, the command is sent to the PC Interface Unit **234** via the PC Cable Assembly **27**. The PC Interface Unit **234** forwards the command to the appropriate Hub to PI Cage Unit **232** via a Multi-Layer Backplane **235**. The Hub to PI Cage Unit **232** then sends the command to the matching Extender Bridge **132** in the appropriate PI Cage **13** via the fiber optic PI Cage to Hub Rack cable assembly **31**. The Extender Bridge **132** determines which Quad PI Board **133** is affected, i.e., required to complete the selected connection, and forwards the command via Multi-Layer Backplane **136**. The appropriate switch action is actually carried out by Quad PI board **133**. However, when the affected PI Cage **13** is connected to a different Hub Rack **2**, the command is sent from the Hub PC **24** to the PC Interface Unit **234** via the PC Cable Assembly **27**. The PC Interface Unit **234** forwards the command to the appropriate Hub to Hub Interface Unit **233** via Multi-Layer Backplane **235**. The Hub to Hub Interface Unit **233** sends the command to the matching Hub to Hub Interface Unit **233** in the appropriate Hub Rack **2** via Hub to Hub Cable Assembly **32**. The Hub to Hub Interface Unit **233** in the receiving Hub Rack **2** forwards the command to the PC Interface Unit **234** via Multi-Layer Backplane **235**. The PC Interface Unit **234** then forwards the command to Hub Controller PC **24** via PC cable assembly **27**. From there, the Hub Controller PC **24** sends the command to the

appropriate PI Cage **13** for action as explained in the Hub to PI Cage description immediately above.

As previously mentioned, when the PI Rack **1** is available for maintenance, a PI Cage **13** within it may receive commands from a PI Rack Diagnostic Terminal **17**. The PI Rack Diagnostic Terminal **17** sends a command to Extender Bridge **132** via EIA-232 PI Rack interface cable **173**. The Extender Bridge **132** determines which Quad PI Board **133** is affected and forwards the command via Multi-Layer Backplane **136**. The appropriate switch action is actually carried out by Quad PI board **133.**

From the foregoing discussion, it will be appreciated that the Multi-Interface Point-to-Point Switching System (MIPPSS) according to the present invention provides the ability to interconnect a large number of electronic components in a manner which allows the components to function as if they were physically wired together. Moreover, several aspects of the MIPPSS have been defined in terms of functional behavior.

Multi-Interface functional behavior refers to the ability of the MIPPSS to handle virtually any type of data transfer protocol, i.e., any device can be connected to any other device that uses that same data transfer protocol. The MIPPSS advantageously is capable of simultaneously handling various parallel and serial signal formats at different speeds and different voltage levels, including fiber optic signals. Moreover, these signals can be of virtually any data type, e.g., communications, images, sensor data, accounting records, and can be used for any scientific, commercial, or military purpose. Furthermore, the MIPPSS offers the advantage of using a single system operating under a single controller to provide all switching services for a given facility.

Point-to-Point functional behavior generally refers to (1) low latency, i.e., achieving a total data transfer delay close to the that which would have been achieved in a direct-wired configuration, (2) timing consistency, i.e., achieving a latency which is deterministic and predictable, and (3) high signal fidelity, i.e., not adding to, deleting from, or altering the signal in any way. Each of these aspects are discussed in greater detail below. It should be noted that one of the features of point-to-

point functional behavior which differentiates MIPPSS from conventional switching systems is the fact that the MIPPSS point-to-point connection is content independent. It should be noted that a content independent point-to-point switching system such as MIPPSS does not consider information in the message, e.g., data, in determining at least one of the duration, i.e., how long the connection lasts, or the direction, i.e., the destination, of the connection. In contrast, in a message dependent point-to-point switching system, a controller generally reads the message before establishing the needed connection and then drops the connection when the message transmission has been completed. The telephone system is a well known example of a message dependent point-to-point switching system; the MIPPSS is not, since, as discussed above, switching control signals are generated only by an independent computer, the Hub Controller PC **24**, or the PI Rack diagnostic terminal **17**, under the ultimate control of the UCC **2a**.

The MIPPSS advantageously achieves a data transfer speed close to the speed which would have been achieved in a direct-wired, i.e., a hard wired, configuration. The total point-to-point delays through the MIPPSS appear as a fixed length of cable. It will be appreciated from the discussion above that the MIPPSS offers the advantage of avoiding inconsistent routing, inconsistent timing, and delays associated with the overhead of operating a packet-switching network. This is of particular value to facilities which use switching to enable testing on equipment.

Moreover, the MIPPSS advantageously achieves a data transfer speed which is deterministic and predictable. This characteristic allows activities such as research and development (R&D) and test and evaluation (T&E) facilities to conduct research and testing without introducing additional possible sources of timing variabilities due to switching. Once again, this is of particular value to facilities which use switching to enable testing on equipment.

It will be appreciated that the MIPPSS does not add to, delete from, or alter the signal in any way, i.e., MIPPSS exhibits a data transfer protocol insensitivity. An interface-compliant input signal arriving at the MIPPSS is output as an interface-compliant signal. This characteristic is critical when the switch serves to connect objects which are themselves under test, allowing research and testing

without introducing additional possible sources of data or signal errors due to switching. High, i.e., virtually perfect, signal fidelity also allows multiple interface types to be transmitted across the switch, allowing efficient utilization of legacy systems. Moreover, MIPPSS exhibits transparent functional behavior, i.e., MIPPSS delivers a signal without interaction with the interface protocol corresponding to that signal. Thus, an interface-compliant input signal bit arriving at an input terminal is output as an interface-compliant signal bit, irrespective of whether the bit is a control bit or a data bit. This characteristic is critical when the switch serves to connect objects which are themselves under test, allowing research and testing without introducing additional possible sources of errors due to switching. It should be noted that, as discussed above, the MIPPSS provides transparent connections in the sense that the switching system merely distinguishes between data and noise, and in the sense that the signals are switched, exhibit substantially the same signal characteristics after passing through the MIPPSS as they do before entering the MIPPSS. Moreover, the data is delivered by the MIPPSS without any attempt to analyze the delivered data.

The MIPPSS advantageously provides a distributed design, wherein each switching unit has the capability of servicing multiple locations, and no single location must house the entire switch. It will be appreciated that this reduces need for costly modifications or additions to facilities to accommodate switching equipment.

In terms of operation, the MIPPSS facilitates easier and less costly reconfigurability. In particular, the MIPPSS advantageously can locate the quickest, i.e., lowest latency, path required to achieve a point-to-point connection. When the first path is unavailable either because it is in use or inoperable, the MIPPSS locates the next lowest latency connection. It will be appreciated that when combined with the hot- swapping capability, i.e., on-line replacement of line-replaceable units, the MIPPSS beneficially remains operable overall while discrete elements are inoperable. Thus, the MIPPSS remains operable even when individual components are either busy or inoperable.

It should also be mentioned that the MIPPSS is designed with standardized units and dimensions for flexible use. For example, all components are contained in an EIA-standard rack.

It will be appreciated that this permits several components of the design, e.g., AC and DC power supplies, cooling modules, control computer, to be commercially available, competitively priced modules. Moreover, this feature permits incorporation of additional modifications to the design since standard dimensions are used. Furthermore, the MIPPSS design incorporates common Commercial Off The Shelf (COTS) hardware in redundant modular designs with the ability to replace units while operating ("hot swap"). The MIPPSS advantageously runs initial, periodic, and on-demand Built-In Test (BIT) routines to assess system functions. It will be appreciated that by running continuous background tests, the MIPPSS achieves a significantly lower system-wide mean time between failures (MTBF). Additionally, by permitting component replacement during operation, the MIPPSS requires less manpower and less facility time to isolate switch problems and effect repairs or modifications.

Furthermore, the MIPPSS architecture advantageously can be increased or decreased in increments of two I/O ports, from a minimum size of two I/O ports up to a maximum of 4096 I/O ports of any interface type. The disclosed technology allows for a larger switch design by simply increasing resources. It will be noted that this scalable design allows users to purchase only what they need initially and add to the switching capability incrementally if the requirements change.

In addition to a high transfer speed of raw data, the MIPPSS advantageously achieves a high message throughput by taking advantage of local switching between adjacent components. Coupled with the characteristic that a path once set stays set until affirmatively released (See the discussion of point-to-point above.), messages can be transmitted efficiently without the redundant path verification or address interpretation required in other switching architectures. This permits improved performance which takes advantage of, but is not reliant upon, intelligent placement of switched components.

It should also be mentioned that a given switch action of any signal type is validated in the MIPPSS by sending an electric pulse to both the input and output connections of the switch. If the electric pulse does not return, the switched connection is labeled as not valid. It will be appreciated

that this feature allows the switch to serve objects which are themselves under test, allowing research and testing without introducing additional possible sources of path and channel alignment errors due to switching.

Moreover, the MIPPSS permits any given path through the switch to be selected via software commands issued by the unified cental controller of the MIPPSS, whereupon the switching system automatically chooses the optimum signal path for each connection. This path, once made, is fixed until released by a later software command. It should also be mentioned that there are alternate paths that are software selectable. This feature permits the MIPPSS to achieve a latency associated with a given path that is fixed, deterministic, and reproducible. Moreover, this feature allows the MIPPSS to serve objects which are themselves under test, allowing research and testing without introducing additional possible sources of path or signal errors due to switching.

In the MIPPSS, any signal input can be switched to any signal output, i.e., the architecture of the switching system does not inhibit the switching action between the input and output. Thus, virtually any equipment can be connected to any other equipment, regardless of total system load, up to the designed capacity of the system.

It will be appreciated that the MIPPSS system will determine the optimum, i.e., the lowest latency, signal path, and achieve a point-to-point connection in response to software commands, which permits the MIPPSS to be remotely and rapidly configured/reconfigured under software control. Therefore, the MIPPSS requires less manpower and less facility time to effect a switch reconfiguration.

In short, the primary utility of such a point-to-point switching system, i.e., MIPPSS, is in transparently switching signals between and among components which may not have been originally designed to be switched. The signals can be of virtually any data type (communications, images, sensor data, accounting records) and can be used for any scientific, commercial, or military purpose.

Although presently preferred embodiments of the present invention have been described in detail hereinabove, it should be clearly understood that many variations and/or modifications of the basic inventive concepts herein taught, which may appear to those skilled in the pertinent art, will still fall within the spirit and scope of the present invention.

ABSTRACT OF THE DISCLOSURE

A switching system, which delivers a plurality of different signal types including selected ones of parallel electrical signals, serial electrical signals, irrespective of voltage level and logic type, and optical signals, providing content independent point-to-point connections. The switching system is characterized as having the capability of delivering the selected signal types substantially unaltered. The elements of the switching system collectively have a relatively low latency, delay the selected signal types an amount substantially equal to the inherent delay associated with a direct-wired point-to-point connection, and provide a signal latency which is deterministic, predictable, and consistent. The switching system switches in response to a content independent software command.

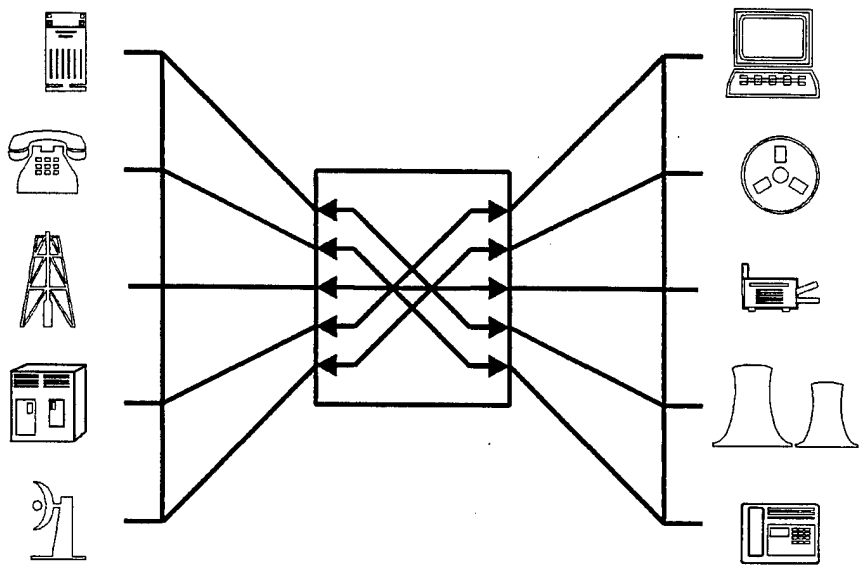

Fig. 1

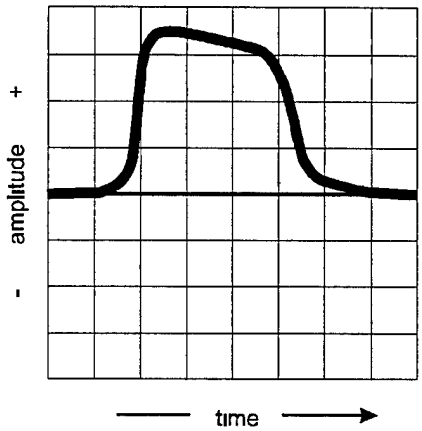

Fig. 2

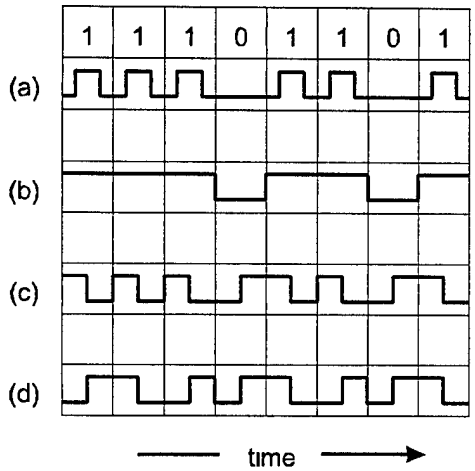

Fig. 3

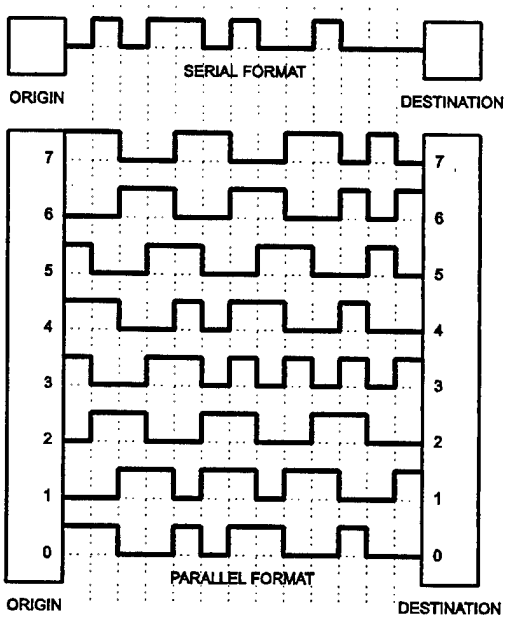

Fig. 4

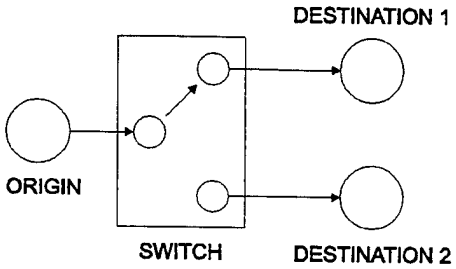

Fig. 5

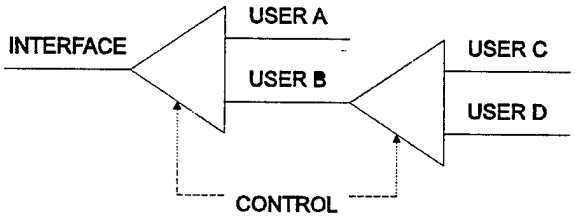

Fig. 6

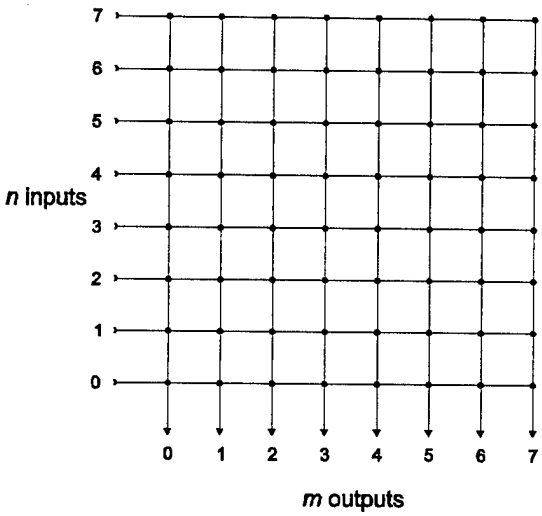

Fig. 7

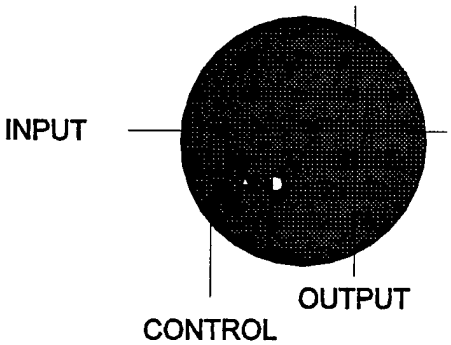

Fig. 8

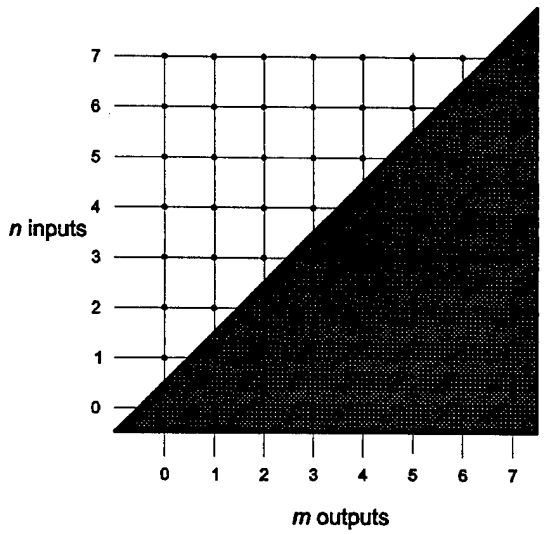
7
6
5
4
n inputs
3
2
1
0
0 1 2 3 4 5 6 7
m outputs

Fig. 9

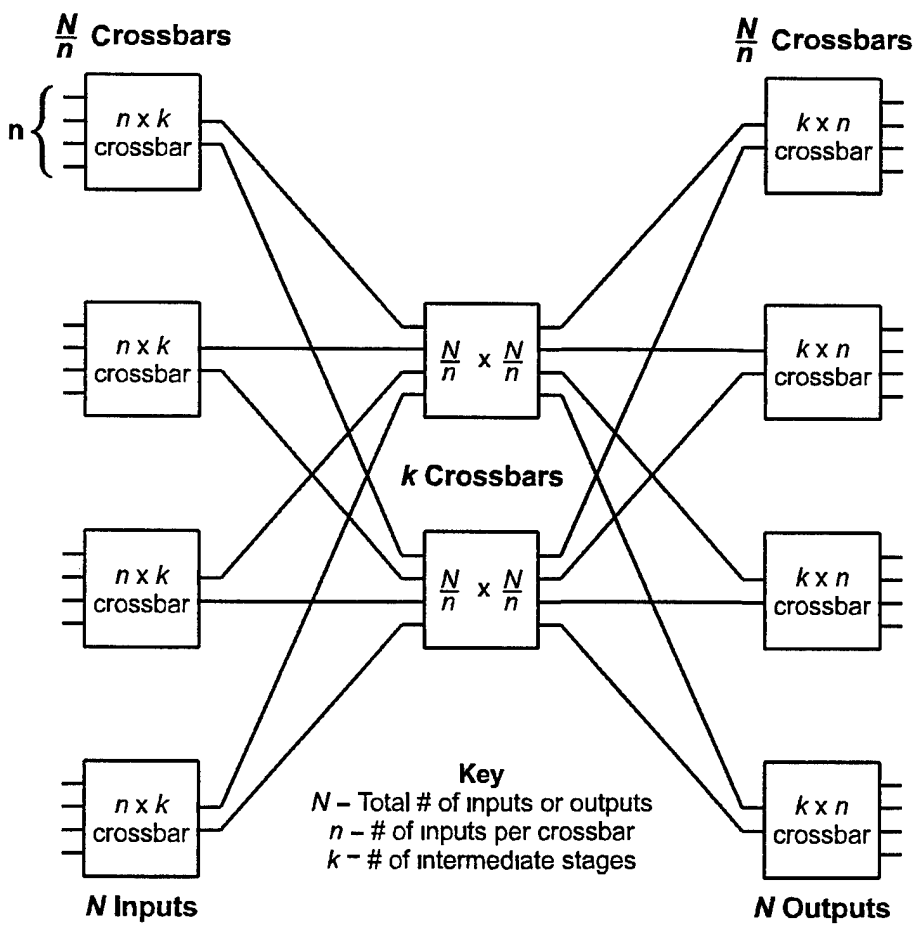
N/n Crossbars
N/n Crossbars
n
n x k crossbar
n x k crossbar
n x k crossbar
n x k crossbar
N/n x N/n
N/n x N/n
k Crossbars
k x n crossbar
k x n crossbar
k x n crossbar
k x n crossbar
Key
N – Total # of inputs or outputs
n – # of inputs per crossbar
k – # of intermediate stages
N Inputs
N Outputs

Fig. 10

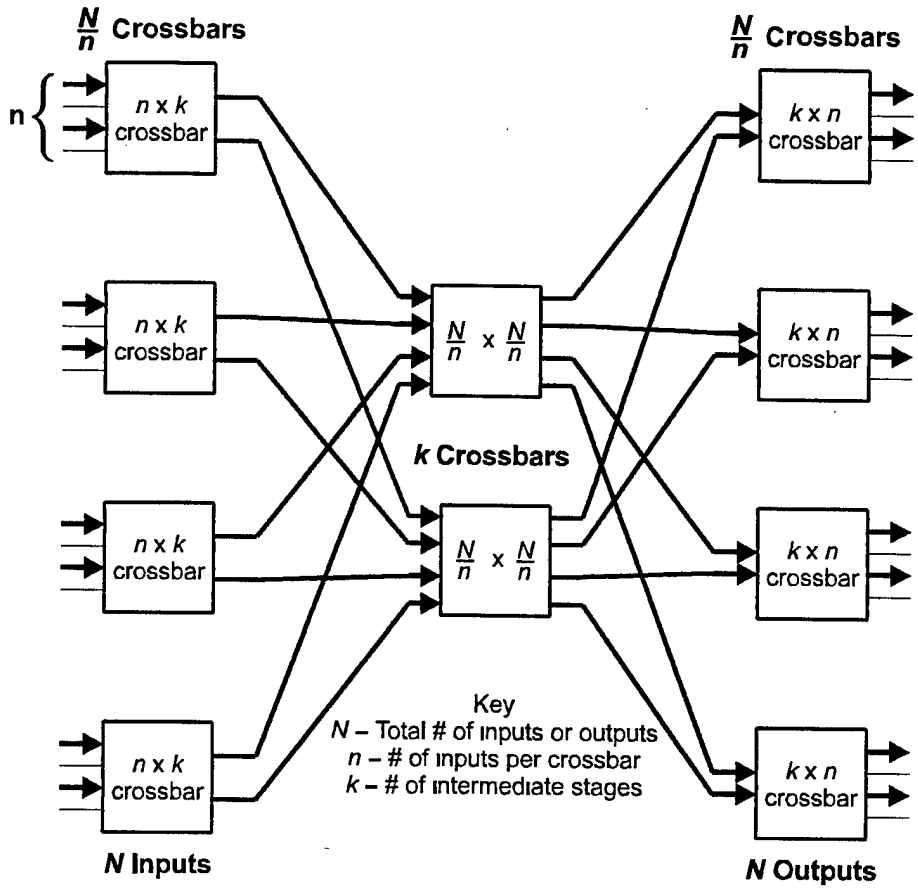

Fig. 11

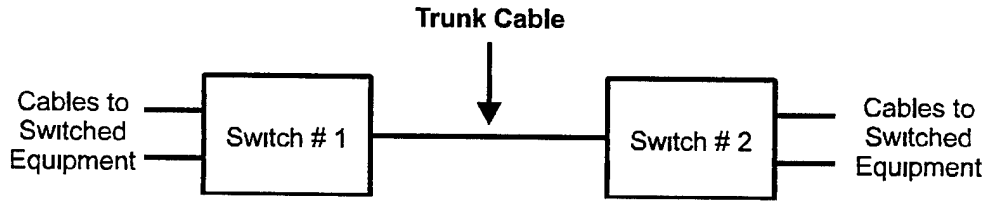

Fig. 12A

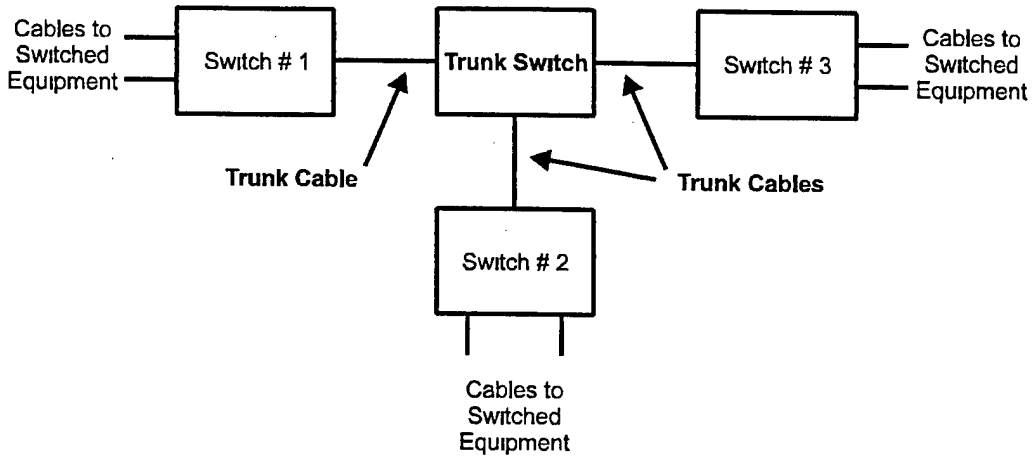

Fig. 12B

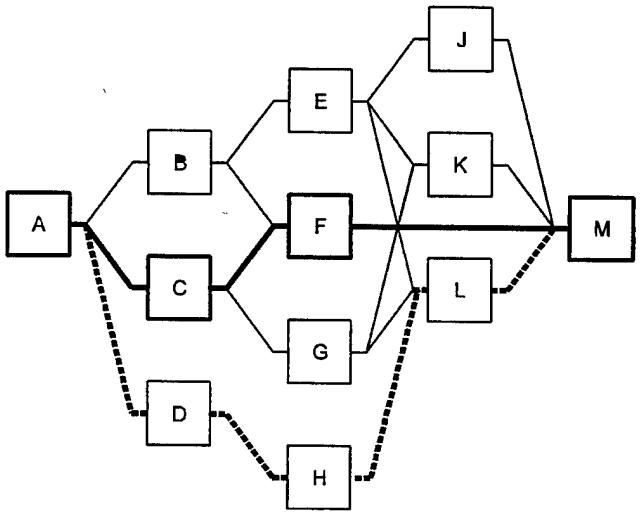

Fig. 13

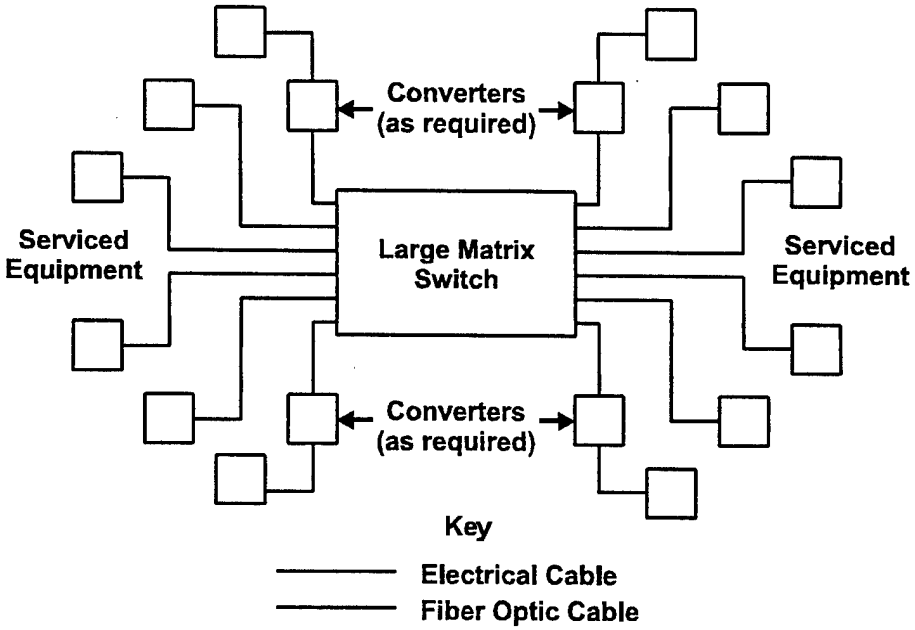

Fig. 14A

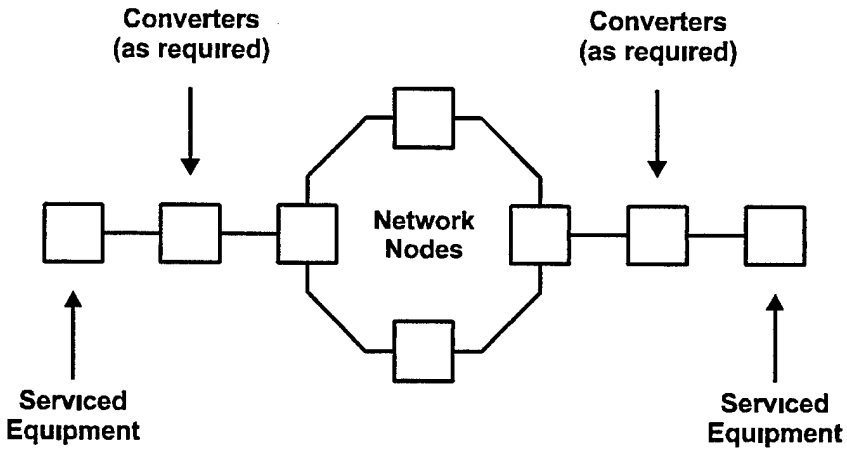

Fig. 14B

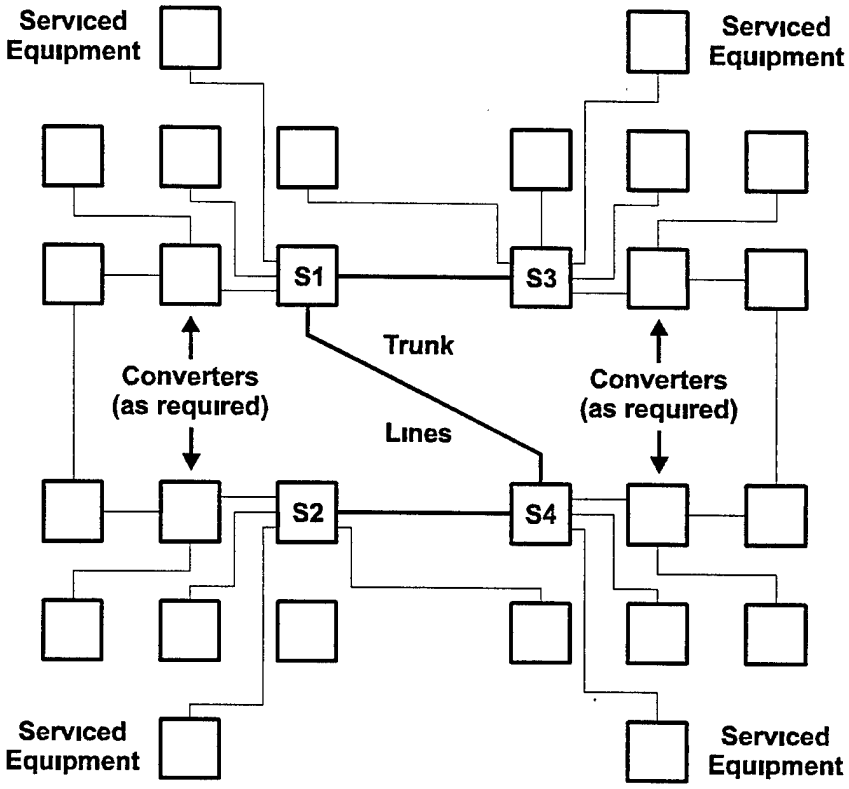
Serviced Equipment
Serviced Equipment
S1
S3
Trunk
Lines
Converters (as required)
Converters (as required)
S2
S4
Serviced Equipment
Serviced Equipment

Fig. 14C

Fig. 15A

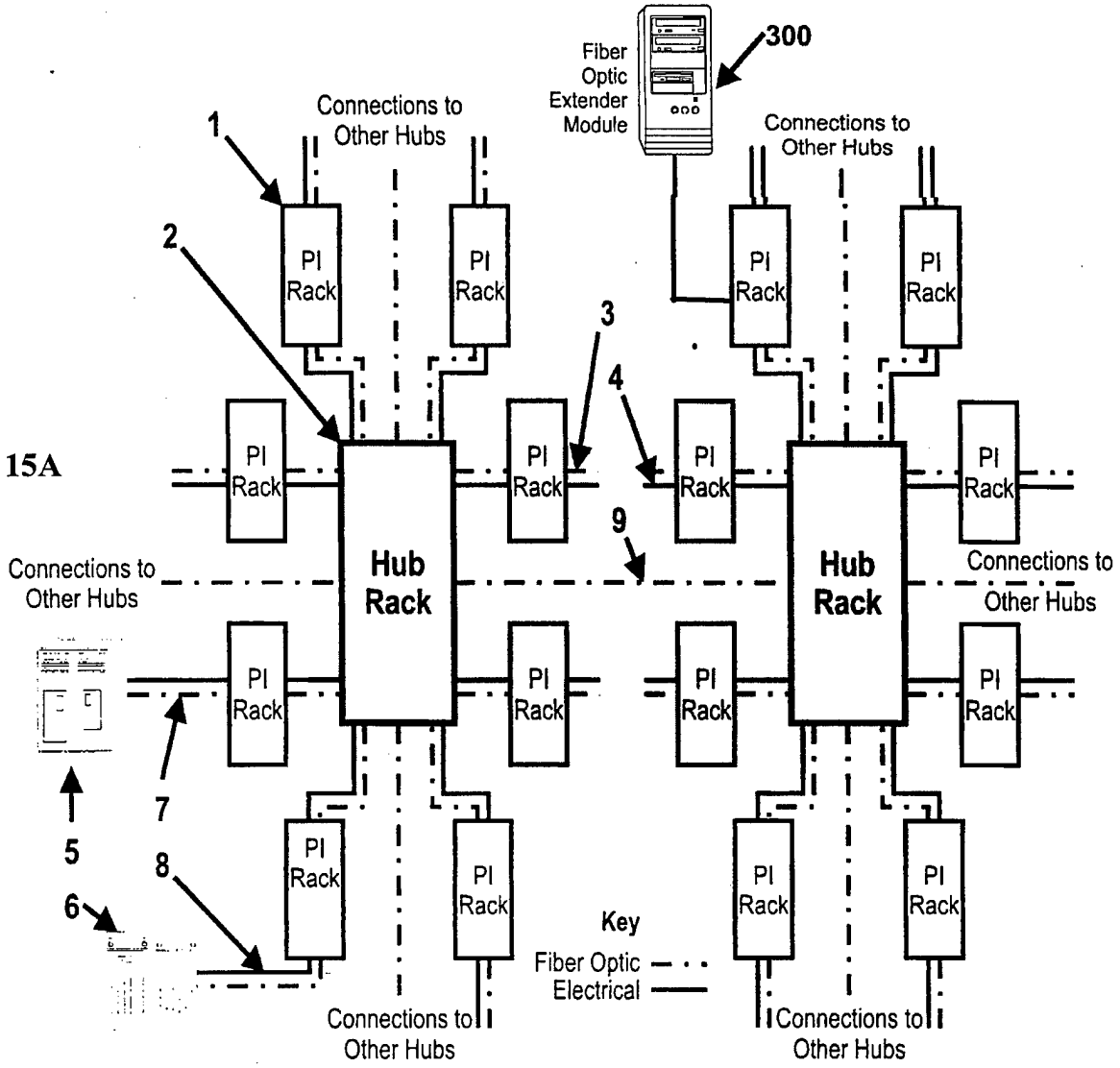

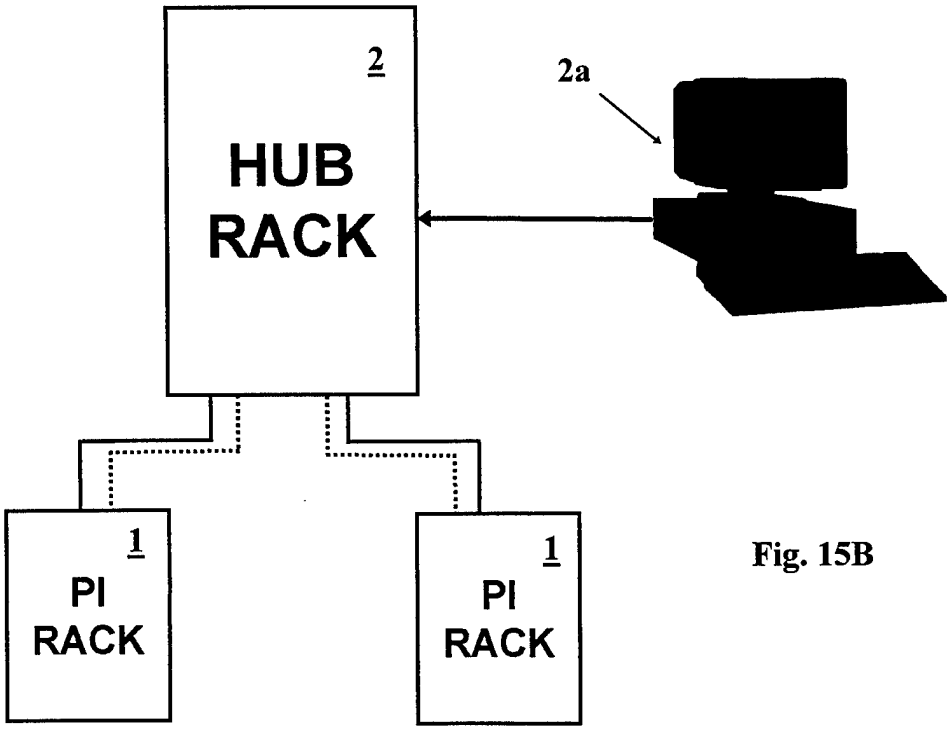

Fig. 15B

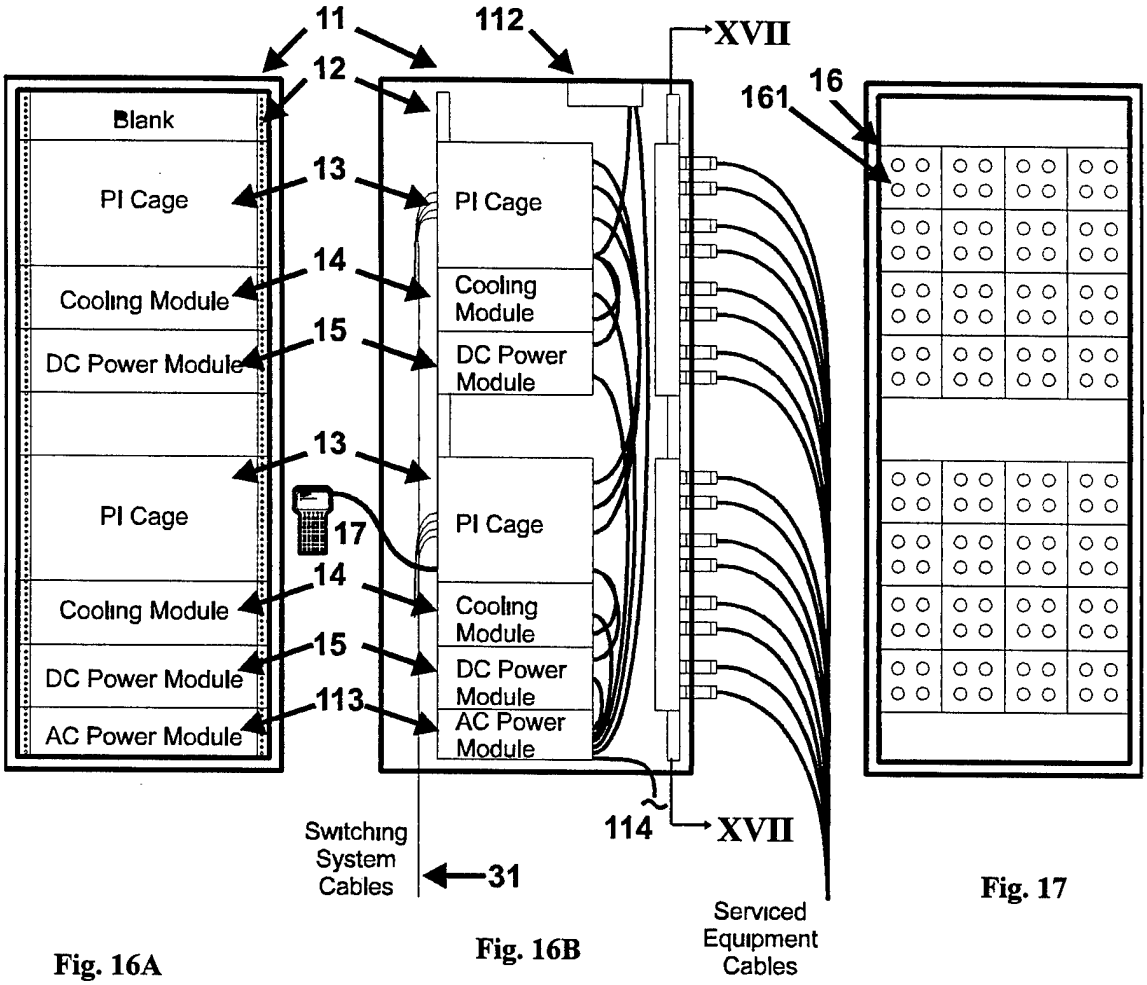

Fig. 16A

Fig. 16B

Fig. 17

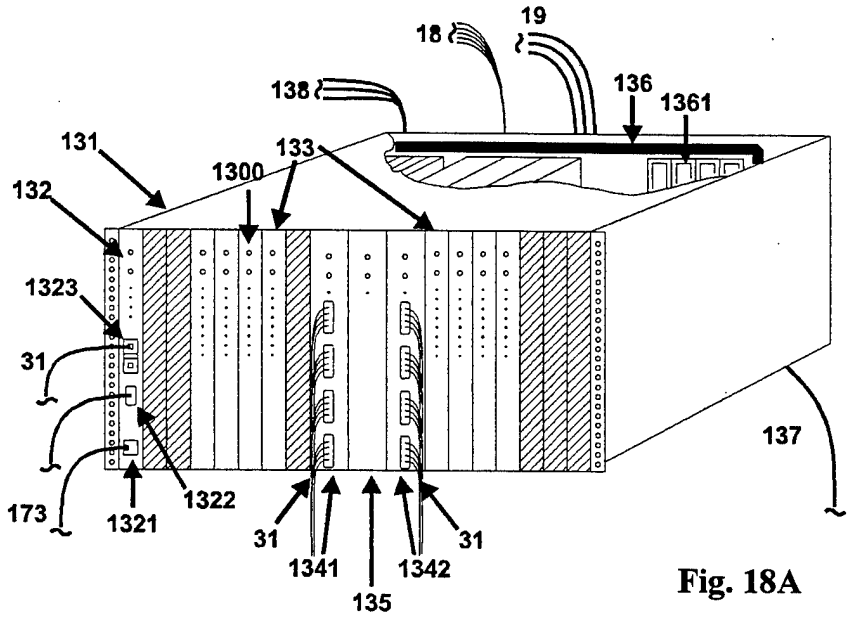

Fig. 18A

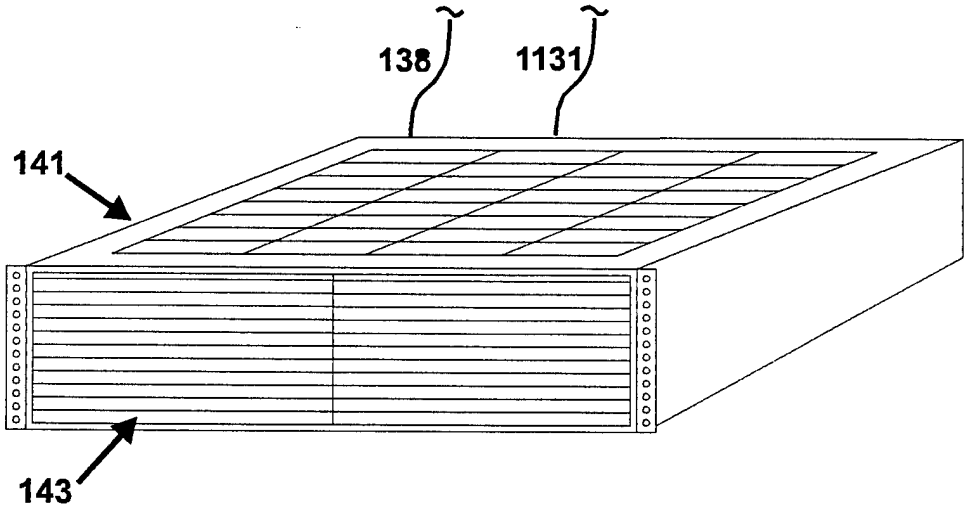

Fig. 19

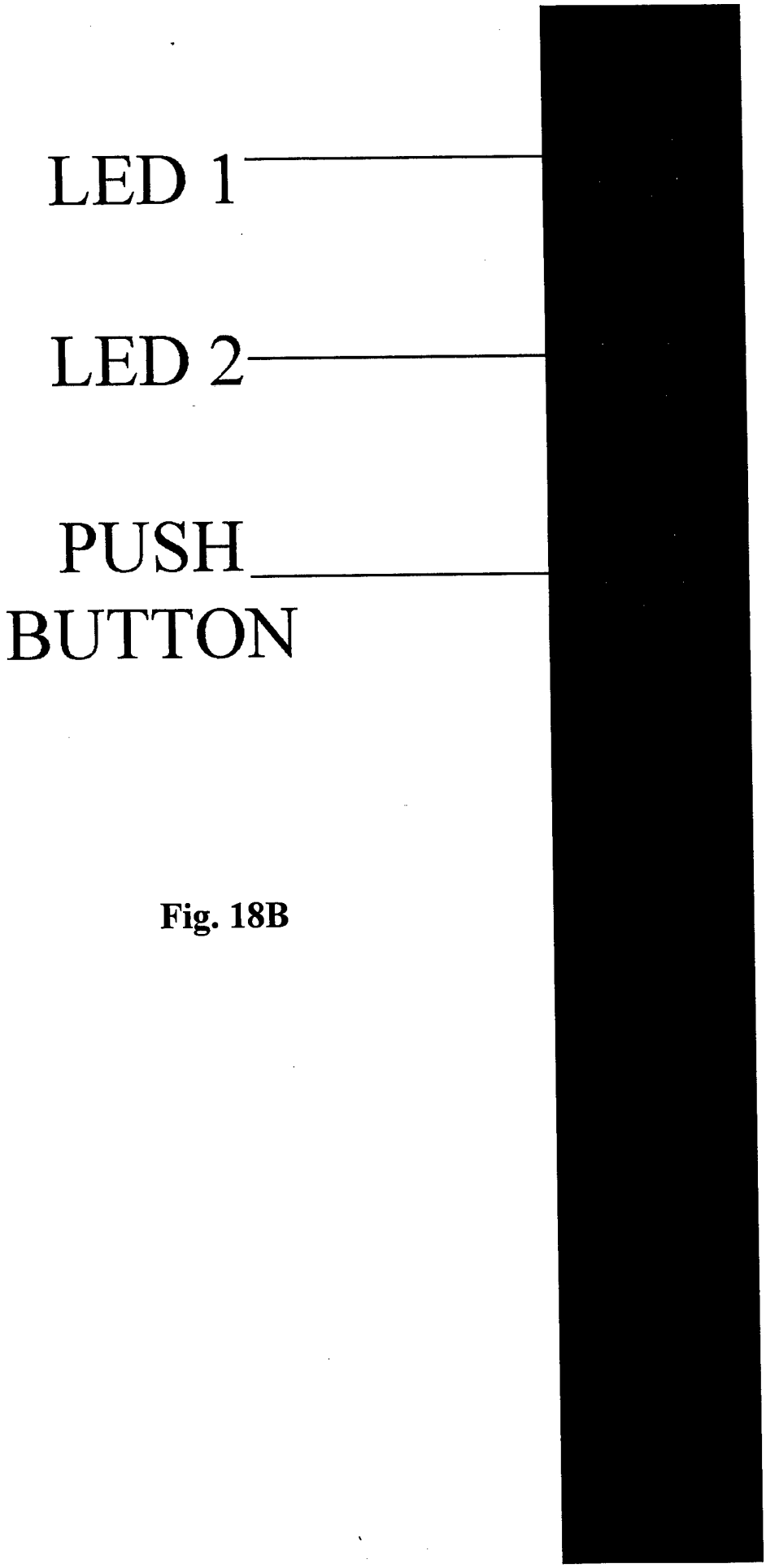

Fig. 18B

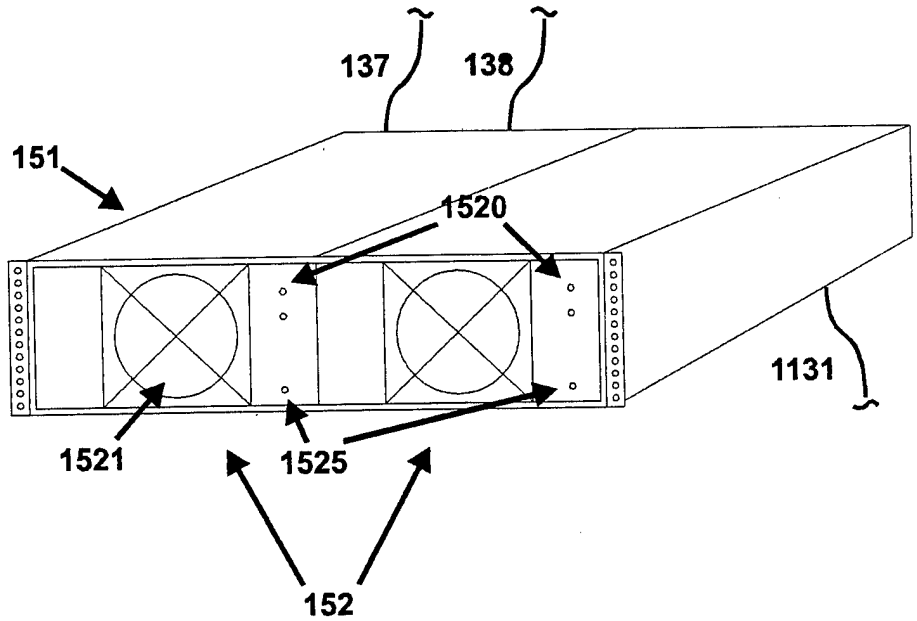

Fig. 20

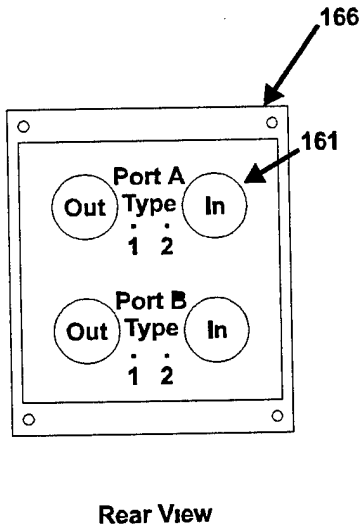

Fig. 21A

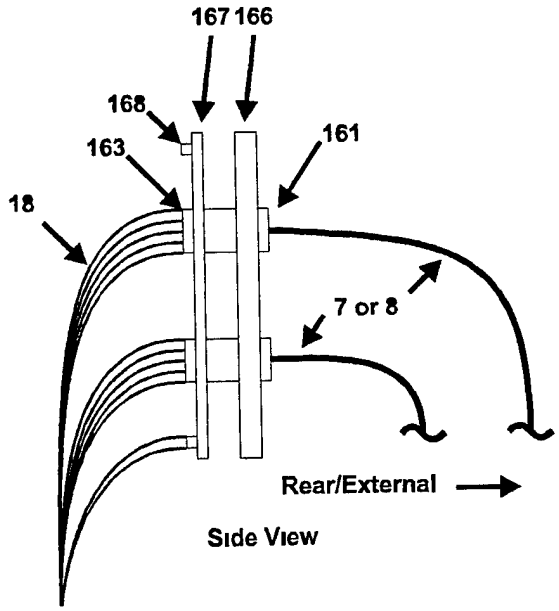

Fig. 21B

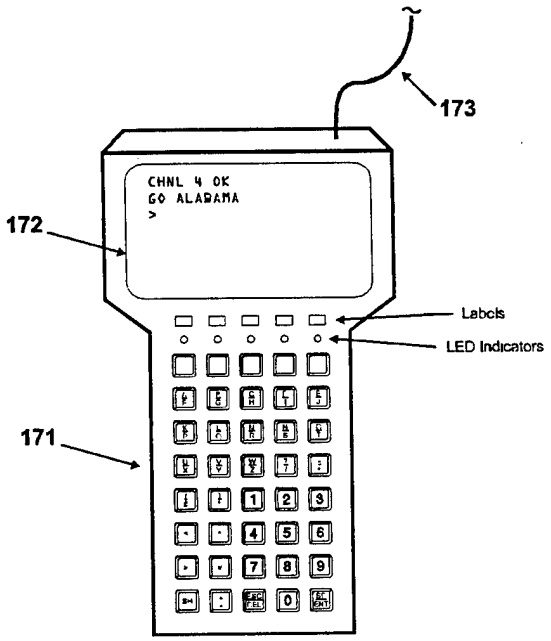
173
CHNL 4 OK
GO ALABAMA
>
172
Labels
LED Indicators
171

Fig. 22

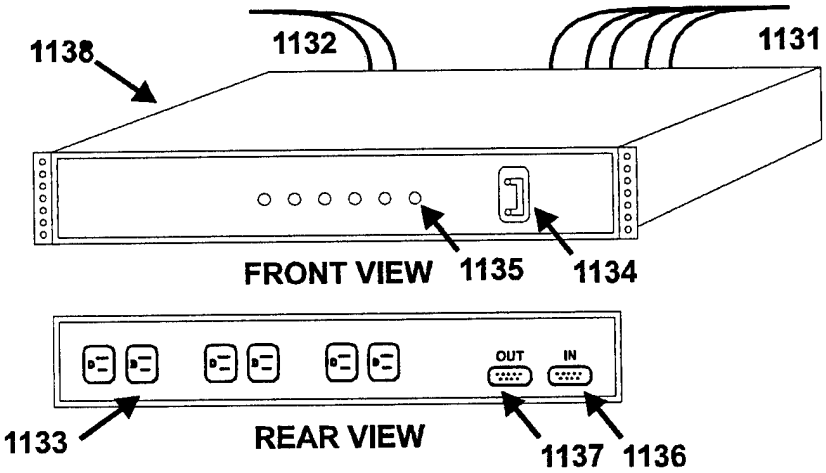
1138
1132
1131
FRONT VIEW
1135
1134
OUT
IN
1133
REAR VIEW
1137
1136

Fig. 23

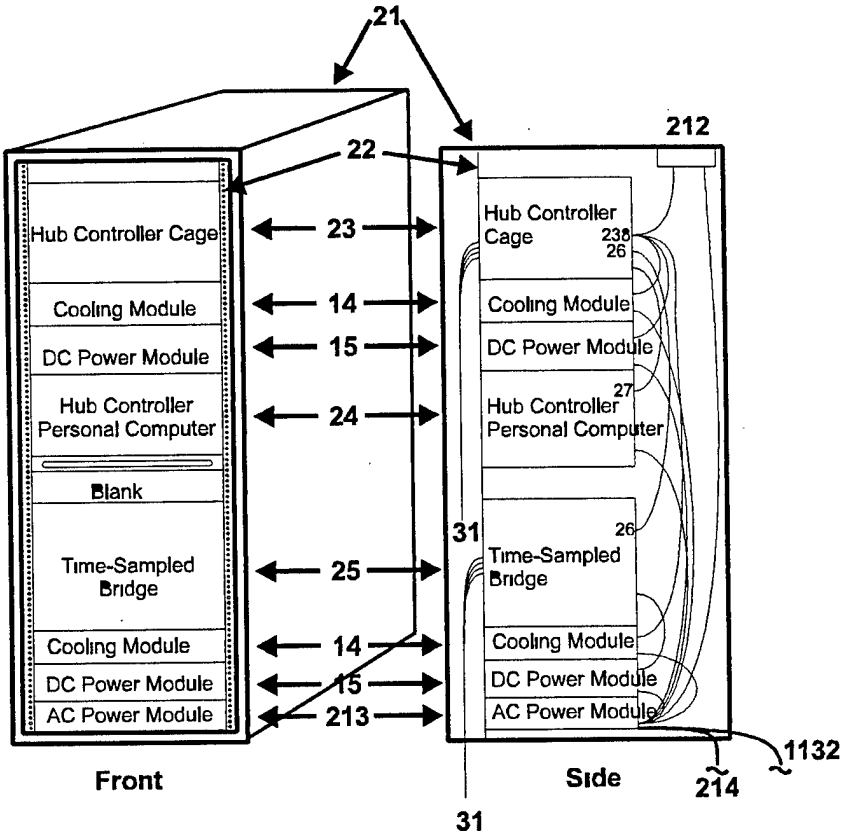

Fig. 24A

Fig. 24B

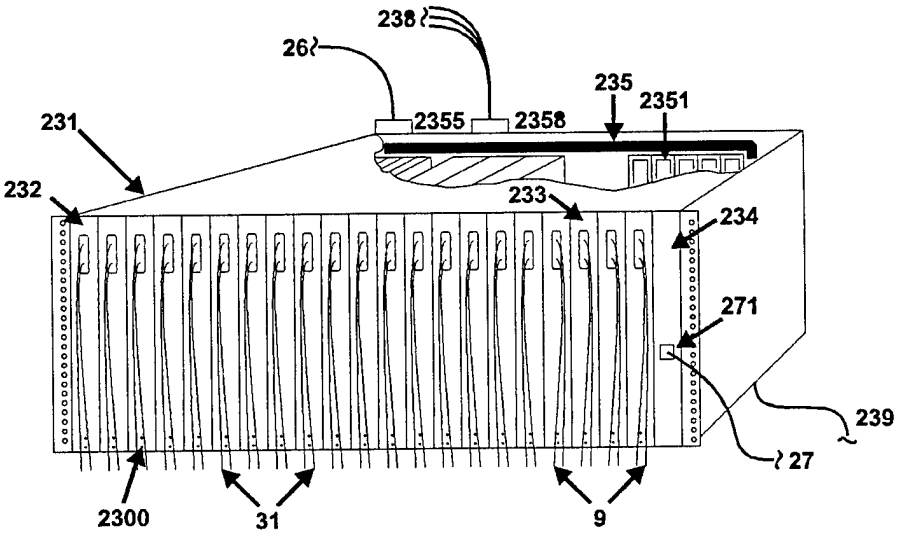

Fig. 25

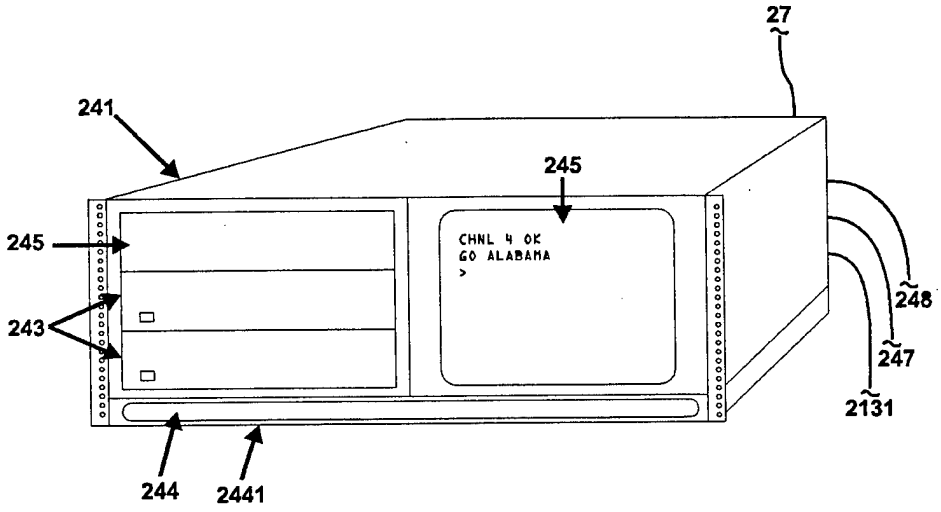

Fig. 26

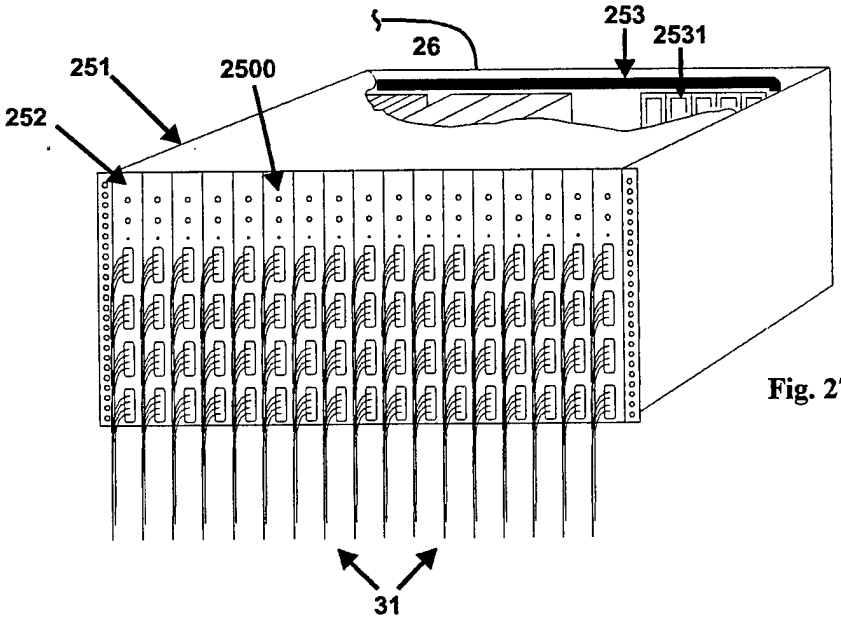

Fig. 27

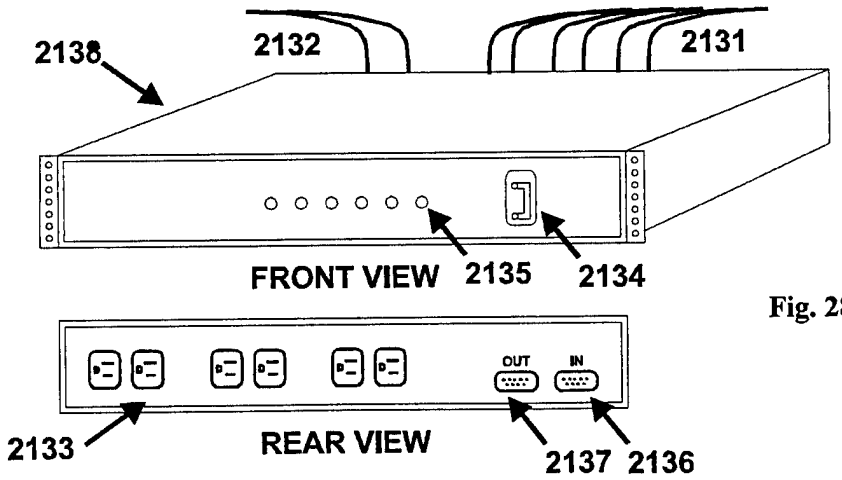

Fig. 28

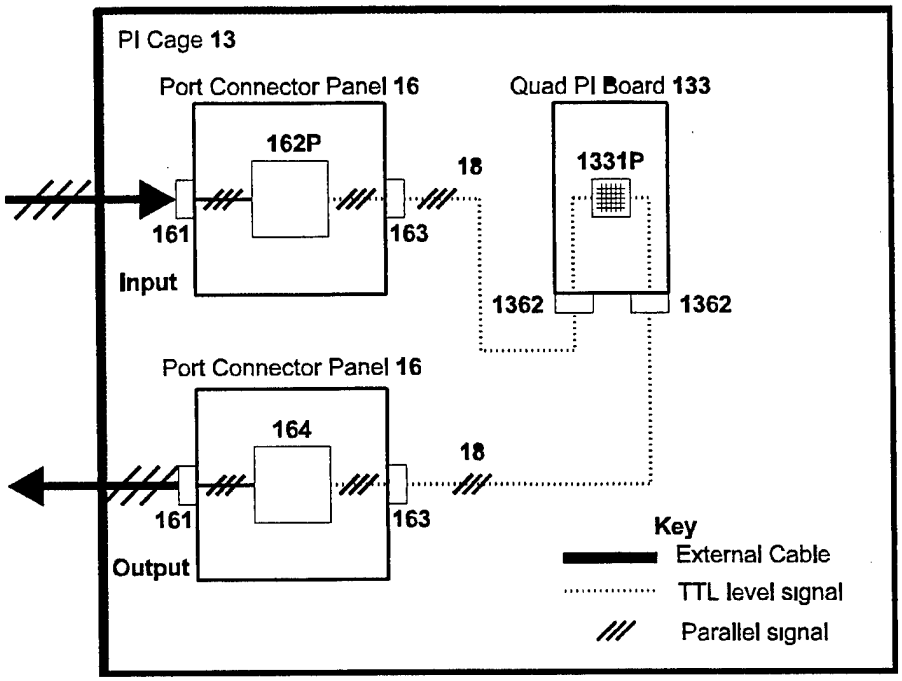
PI Cage 13
Port Connector Panel 16
162P
Quad PI Board 133
1331P
18
161
163
Input
1362
1362
Port Connector Panel 16
164
18
161
163
Output
Key
External Cable
TTL level signal
Parallel signal

Fig. 29

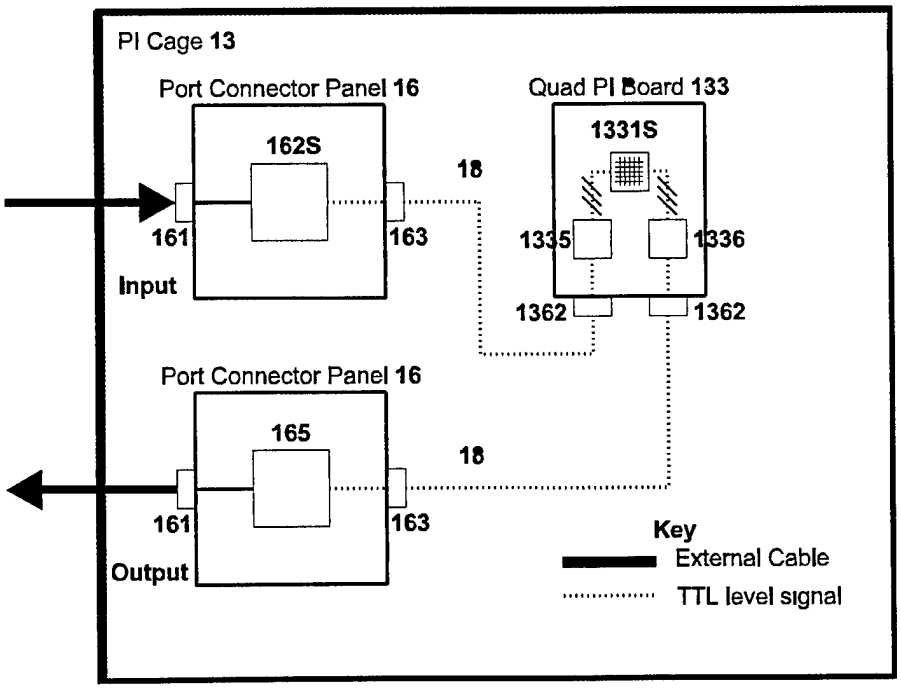
PI Cage 13
Port Connector Panel 16
162S
Quad PI Board 133
1331S
18
161
163
Input
1335
1336
1362
1362
Port Connector Panel 16
165
18
161
163
Output
Key
External Cable
TTL level signal

Fig. 30

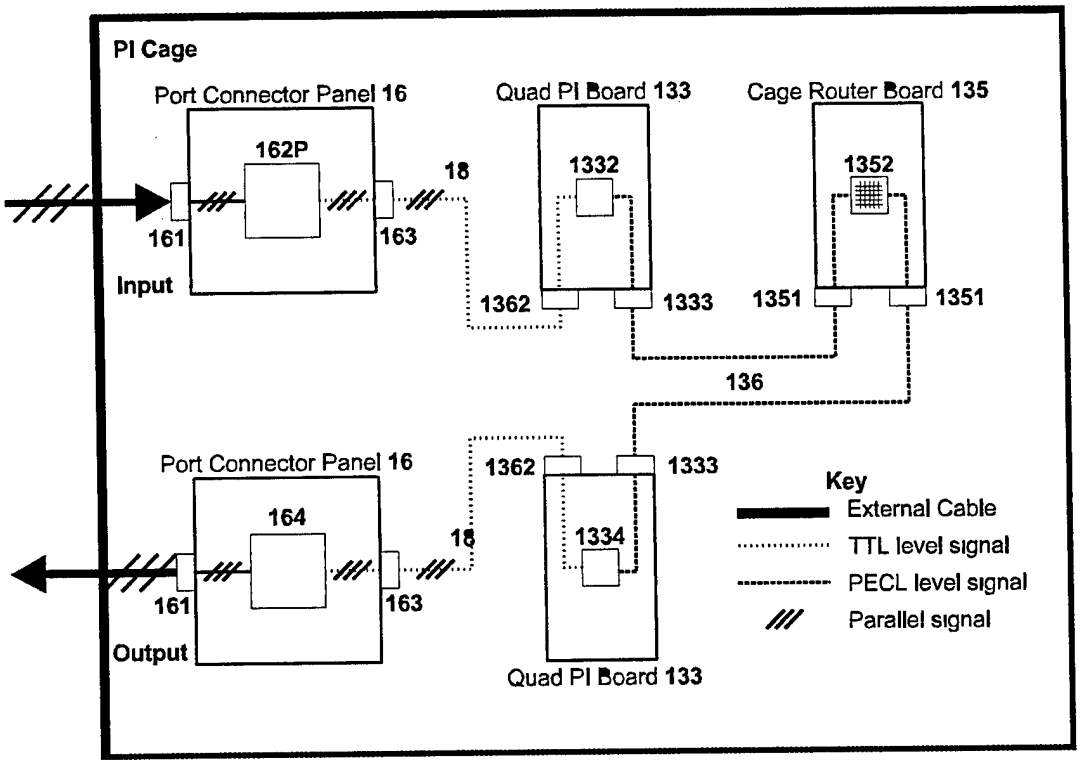
PI Cage
Port Connector Panel 16
162P
161
163
Input
18
Quad PI Board 133
1332
1362
1333
Cage Router Board 135
1352
1351
1351
136
Port Connector Panel 16
164
161
163
Output
18
1362
1333
1334
Quad PI Board 133
Key
External Cable
TTL level signal
PECL level signal
Parallel signal

Fig. 31

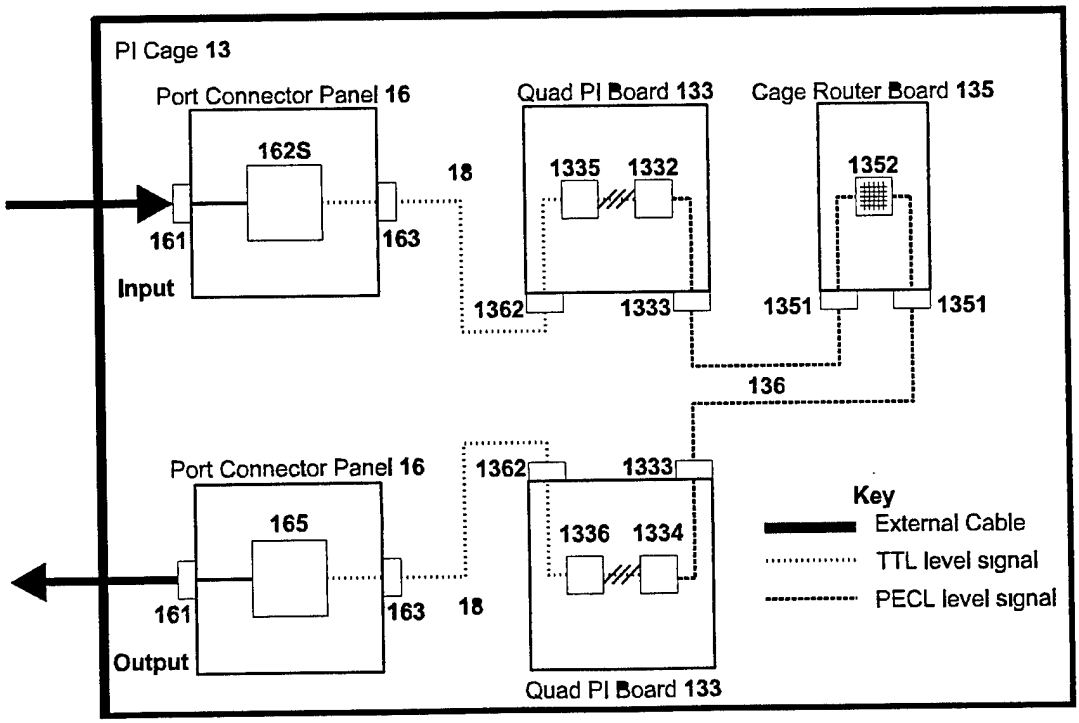
PI Cage 13
Port Connector Panel 16
162S
161
163
Input
18
Quad PI Board 133
1335
1332
1362
1333
Cage Router Board 135
1352
1351
1351
136
Port Connector Panel 16
165
161
163
Output
18
1362
1333
1336
1334
Quad PI Board 133
Key
External Cable
TTL level signal
PECL level signal

Fig. 32

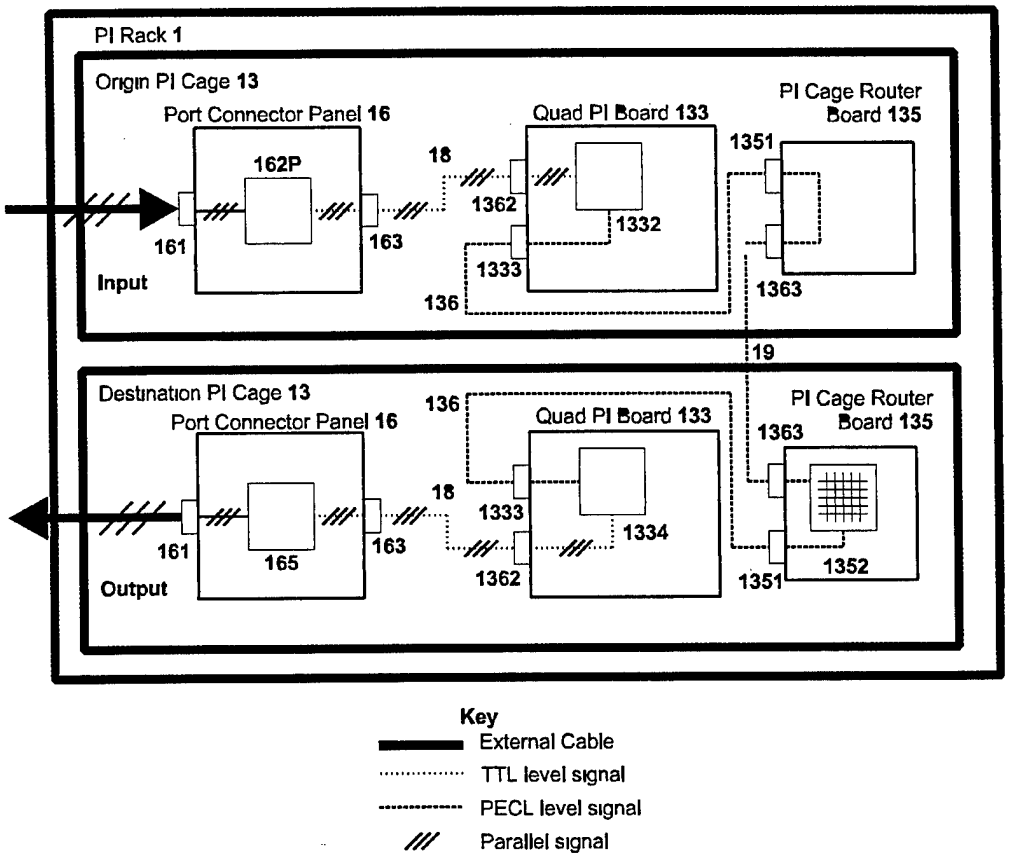
PI Rack 1
Origin PI Cage 13
Port Connector Panel 16
162P
161
163
Input
18
1362
1333
136
Quad PI Board 133
1332
1351
PI Cage Router Board 135
1363
19
Destination PI Cage 13
Port Connector Panel 16
165
161
163
Output
136
18
1333
1362
Quad PI Board 133
1334
1363
PI Cage Router Board 135
1351
1352
Key
External Cable
TTL level signal
PECL level signal
Parallel signal

Fig. 33

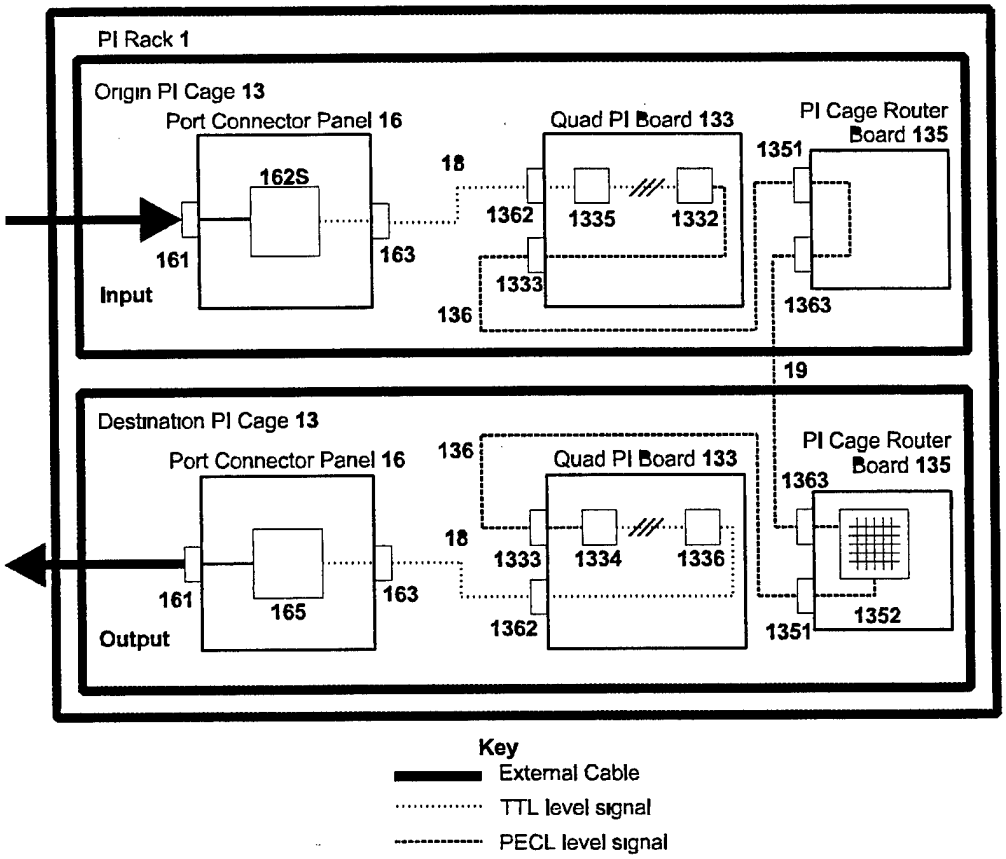
PI Rack 1
Origin PI Cage 13
Port Connector Panel 16
162S
161
163
Input
18
1362
1335
1332
1333
136
Quad PI Board 133
PI Cage Router Board 135
1351
1363
19
Destination PI Cage 13
Port Connector Panel 16
136
Quad PI Board 133
PI Cage Router Board 135
1363
18
1333
1334
1336
161
165
163
1362
1351
1352
Output
Key
External Cable
TTL level signal
PECL level signal

Fig. 34

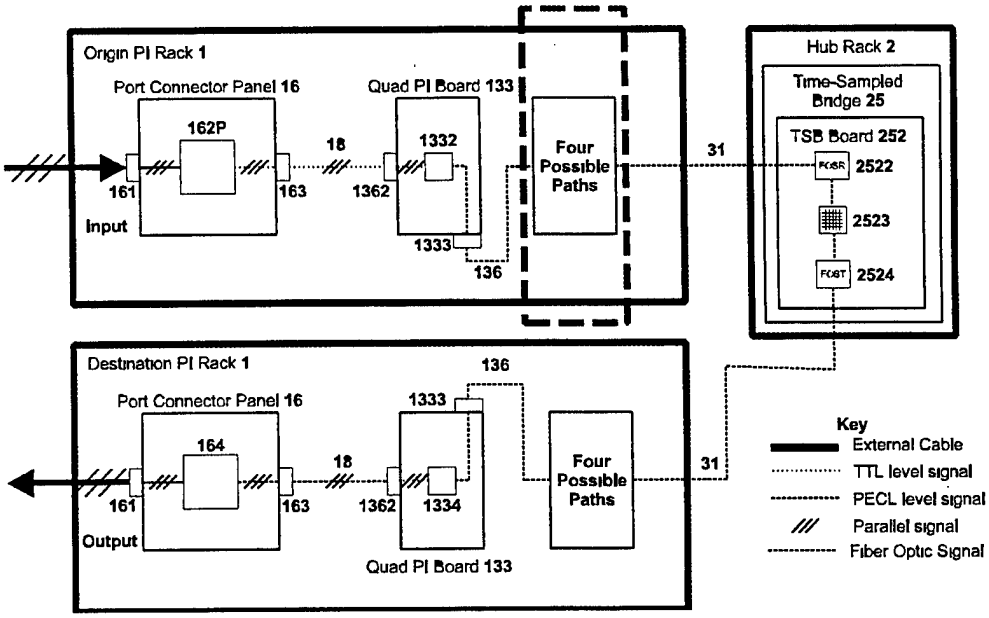
Origin PI Rack 1
Port Connector Panel 16
162P
161
Input
163
18
Quad PI Board 133
1332
1362
1333
136
Four Possible Paths
31
Hub Rack 2
Time-Sampled Bridge 25
TSB Board 252
FOSR
2522
2523
FOST
2524
Destination PI Rack 1
Port Connector Panel 16
164
161
Output
163
18
1333
1362
1334
Quad PI Board 133
136
Four Possible Paths
31
Key
External Cable
TTL level signal
PECL level signal
Parallel signal
Fiber Optic Signal

Fig. 35

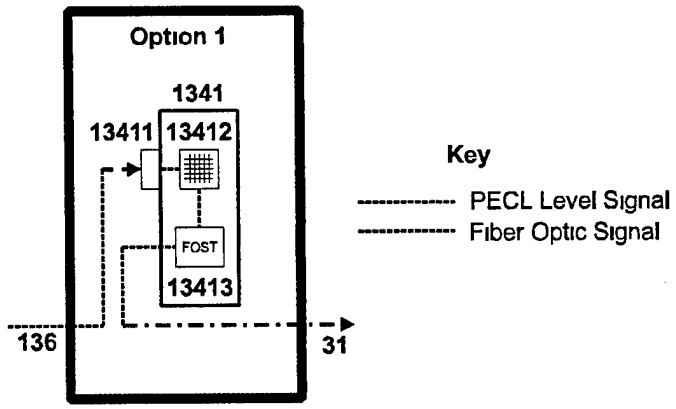
Option 1
1341
13411
13412
FOST
13413
136
31
Key
PECL Level Signal
Fiber Optic Signal

Fig. 36

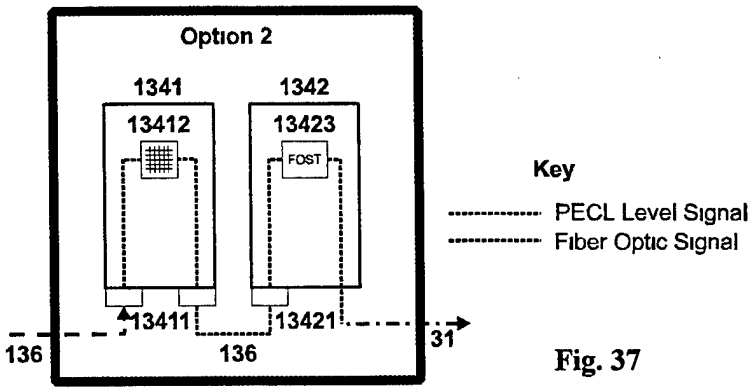

Fig. 37

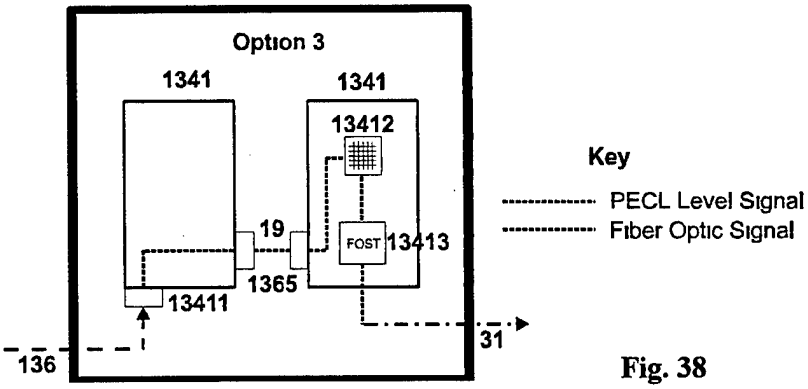

Fig. 38

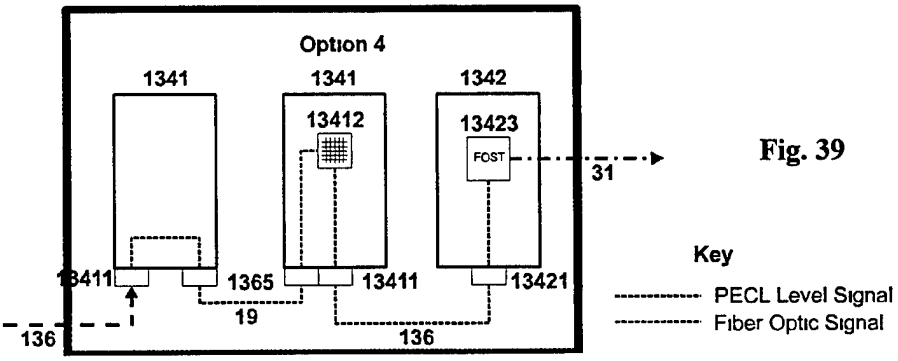

Fig. 39

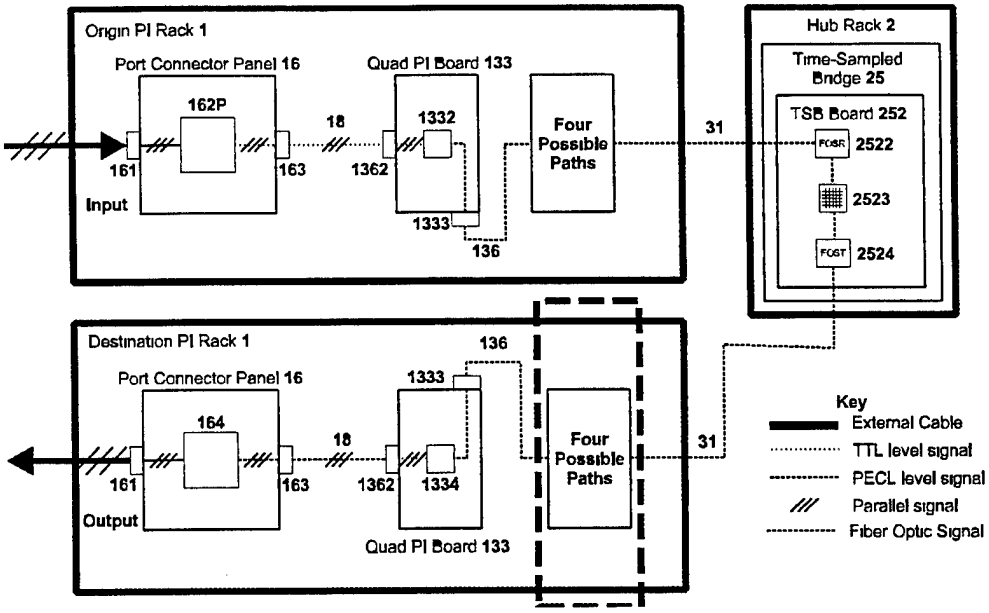
Origin PI Rack 1
Port Connector Panel 16
162P
Quad PI Board 133
1332
18
161
163
1362
Input
1333
136
Four Possible Paths
31
Hub Rack 2
Time-Sampled Bridge 25
TSB Board 252
FOSR
2522
2523
FOST
2524
Destination PI Rack 1
Port Connector Panel 16
164
1333
136
18
161
163
1362
1334
Output
Quad PI Board 133
Four Possible Paths
31
Key
External Cable
TTL level signal
PECL level signal
Parallel signal
Fiber Optic Signal

Fig. 40

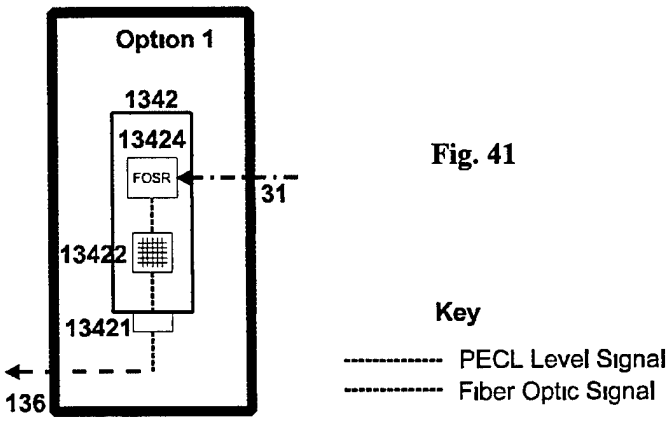
Option 1
1342
13424
FOSR
31
13422
13421
136
Key
PECL Level Signal
Fiber Optic Signal

Fig. 41

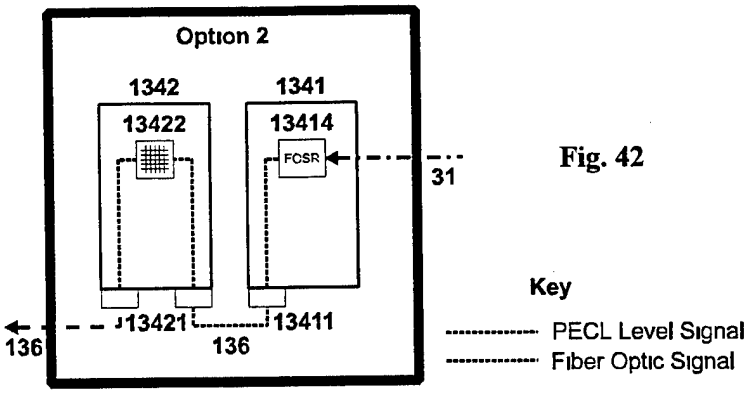

Fig. 42

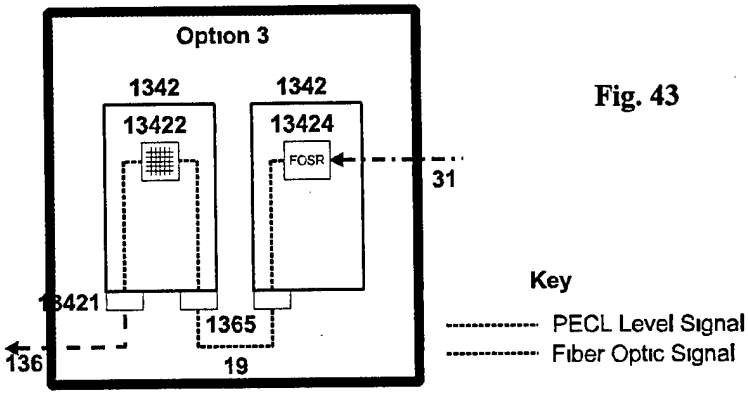

Fig. 43

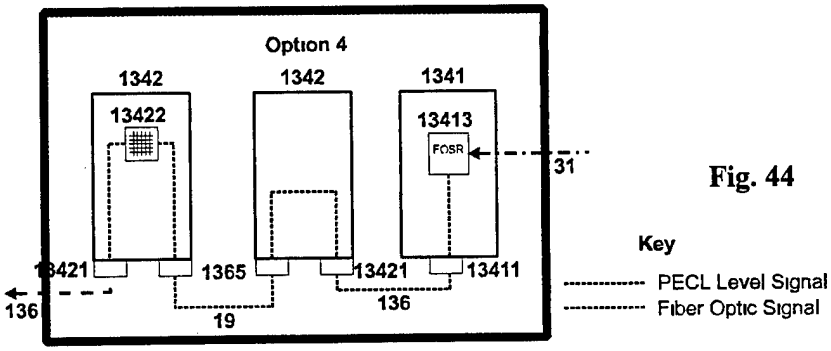

Fig. 44

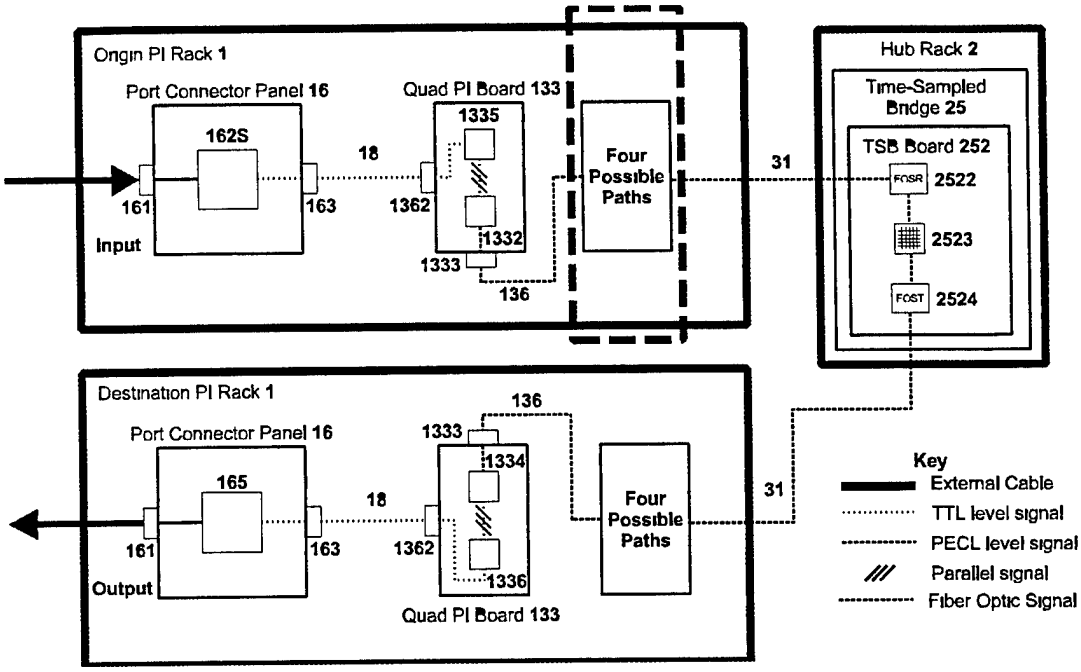
Origin PI Rack 1
Port Connector Panel 16
Quad PI Board 133
162S
18
1335
161
163
1362
1332
Input
1333
136
Four Possible Paths
31
Hub Rack 2
Time-Sampled Bridge 25
TSB Board 252
FOSR
2522
2523
FOST
2524
Destination PI Rack 1
136
Port Connector Panel 16
1333
1334
165
18
161
163
1362
1336
Output
Quad PI Board 133
Four Possible Paths
31
Key
External Cable
TTL level signal
PECL level signal
Parallel signal
Fiber Optic Signal

Fig. 45

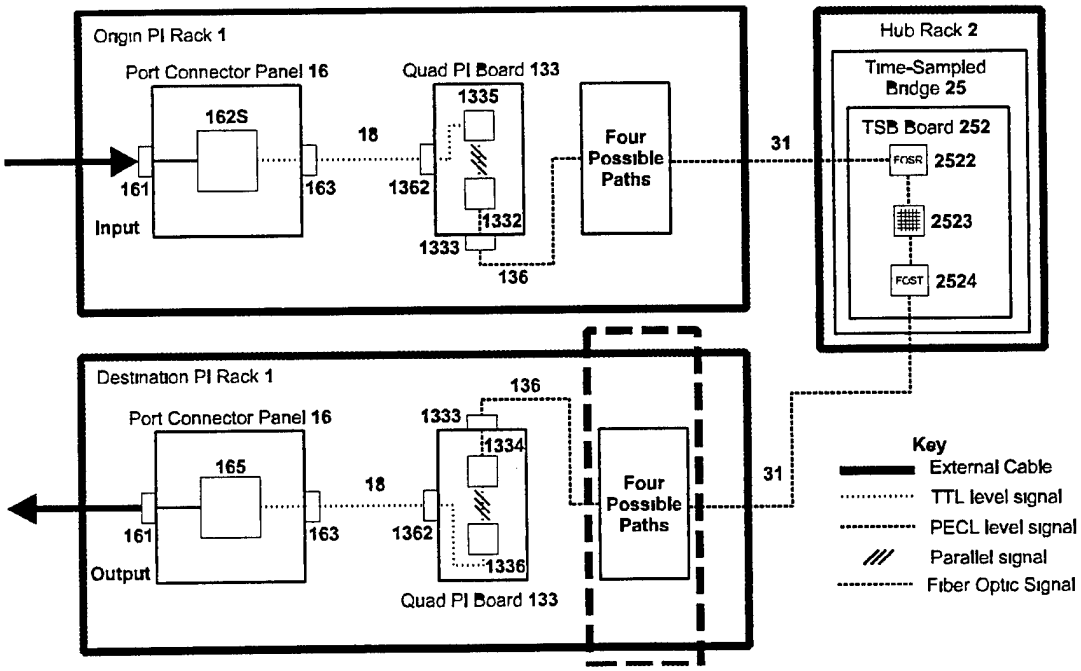
Origin PI Rack 1
Port Connector Panel 16
Quad PI Board 133
162S
18
1335
161
163
1362
1332
Input
1333
136
Four Possible Paths
31
Hub Rack 2
Time-Sampled Bridge 25
TSB Board 252
FOSR
2522
2523
FOST
2524
Destination PI Rack 1
136
Port Connector Panel 16
1333
1334
165
18
161
163
1362
1336
Output
Quad PI Board 133
Four Possible Paths
31
Key
External Cable
TTL level signal
PECL level signal
Parallel signal
Fiber Optic Signal

Fig. 46