Form NTIS-303
(8-76)

U.S. Department of Commerce
NATIONAL TECHNICAL INFORMATION SERVICE

INVENTION EVALUATION QUESTIONNAIRE

TO:

AD-D012 373

An evaluation of the invention identified below is requested as part of a Department of Commerce program aimed at promoting the use of Government inventions. Please complete the questionnaire and return it to:

Patent Program
National Technical Information Service
5285 Port Royal Road
Springfield, Virginia 22161

This questionnaire might also be sent by NTIS to others associated with the development of this invention. Please submit an independently prepared response; do not consult with others receiving a copy of this questionnaire.

Thank you for your cooperation.

INVENTION IDENTIFICATION

Title of invention

METAL THICKNESS MEASUREMENTS USING RADIOGRAPHY

Inventor(s) P. M. ACHREKAR	Agency Sponsor AF
Application Serial No. 852,683	Application Filing Date 16 April 1986
Agency Case No. AF Inv. No. 16,647	Patent No. (if any)

RESPONDENT IDENTIFICATION

Name WILLIAM STEPANISHEN	Address USAF (AFJACPB) 424 TRAPELO ROAD WALTHAM, MASS 02154
Title Chief, Electronics Section	
Organization AFJACPB	
Telephone 617-861-4073	

NTIS use only:

Date completed questionnaire received by NTIS _____

Source code: GP____ A D G B E H C F I

Evaluator _____

USCOMM-DC 8901 P76

DTIC FILE COPY

86 7 2 019

OK, SRG.

Accession For
NTIS CRA&I ☑
DTIC TAB ☐
Unannounced ☐
Justification

Distribution/
Availability Codes
Avail and/or
Dist Special
A

DTIC
ELECTE
JUL 0 8 1986
S D
F

DISTRIBUTION STATEMENT A
Approved for public release;
Distribution Unlimited

NTIS w/o chg

METAL THICKNESS MEASUREMENTS USING RADIOGRAPHY

STATEMENT OF GOVERNMENT INTEREST

The invention described herein may be manufactured and used by or for the Government for governmental purposes without the payment of any royalty thereon.

BACKGROUND OF THE INVENTION

The present invention relates broadly to a radiographic inspection technique, and in particular to a metal thickness measurement method using radiography.

The processes and techniques for measuring the thickness of metal parts and components which are used in critical electronic systems is well recognized. Exemplary in the field of radiographic methods and techniques are the following U.S. Patents, which are incorporated by reference herein:

U.S. Patent No. 2,349,429 issued to Hersog et al on 23 May 1944;

U.S. Patent No. 3,597,777 issued to Douglas on 10 August 1971;

U.S. Patent No. 3,796,874 issued to Roller et al on 12 March 1974;

86 7 2 019

U.S. Patent No. 4,104,519 issued to Oldendorf on 1 August 1978;

U.S. Patent No. 4,301,365 issued to Basin et al on 17 November 1981;

U.S. Patent No. 4,374,326 issued to Wykes et al on 15 February 1983; and

U.S. Patent No. 4,510,577 issued to Tsujii et al on 9 April 1985.

In general, the well known prior art processes for measuring the thickness of metal parts and objects require the use of a separate standard to which the test object was compared. The Basin et al reference, U.S. Patent No. 4,301,365, discloses an apparatus for contactless measurement of the thickness of a sheet material which includes a radiation detector to sense the radiation passed through the sheet material. The Herzog et al reference, U.S. Patent No. 2,349,429, discloses a method and the apparatus for measuring the thickness of a wall which includes the directing of a radiation beam through the wall and then determining the amount of radiation transmitted through the wall. The Tsujii et al reference, U.S. Patent No. 4,510,577, discloses a noncontact thickness gauge for measuring the thickness of a material which includes a radiation detector for measuring the amount of radiation received from a source. The Oldendorf reference, U.S. Patent No. 4,104,519, disclose a method and the apparatus for the retrieval of exposure information from film images.

The following U.S. Patent Nos. 3,597,777, 3,796,874 and 4,374,326 which are also cited for interest, each respectively discloses an apparatus for measuring the properties of a material by using X-rays.

The following references are to be noted as being pertinent and of interest in the field of radiographic material examination:

(a) Military Standard MIL-STD-453C (1974)

(b) Military Standard MIL-STD-271E (1973); Notice 1 (1980), Notice 2 (1984)

References (a) and (b) are provided because they provide excellent background information relative to the methods that are used to measure the thickness of a material. The sections of particular interest is in reference (b), subsections 3.2 and 3.3 which describe the requirements for radiographic testing in order to determine the presence of discontinuities in ferrous and nonferrous metals.

Any data or information relative to the actual metal thickness of an enclosure provides a useful design basis for electromagnetic interference (EMI), radio frequency interference (RFI) and other shielding purposes. Metal enclosures can be fabricated from thinner gages (weight savings) if localized damage by processes such as bending, stamping, forming, stretching, welding, etc. can be assessed. In the welding process, the internal weld quality (voids, blow holes, etc.) may mean that less material than the measureable

metal thickness is actually doing the shielding. This method is developed so that the effective metal thickness of localized metal regions can be inspected and assured.

A comparator microphotometer which is a means for comparing the optical densities of spectrum lines from spectrophotometers, is used. This machine compares the optical densities of an exposed spectrum plate and a standard spectrum plate. The data gathered is then converted to the % concentration of unknown elements.

SUMMARY OF THE INVENTION

The present invention describes a process which is used to assure the thicknesses in small regions of fabricated metal objects and components, thus facilitating the localized assessment of the effective metal thickness. The localized areas wherein the effective metal thickness is less than the minimum that is required for radiation shielding and which can render a shielding enclosure functionless, is readily determined.

It is one object of the present invention, therefore, to provide an improved method of thickness measurements.

It is another object of the invention to provide an improved method of metal thickness measurements wherein x-ray radiography is utilized to create optical densities on x-ray films.

It is another object of the invention to provide an improved method of metal thickness measurements which utilizes

a comparator microphotometer to compare the optical densities on the x-ray films.

It is another object of the invention to provide an improved method of metal thickness measurements in which the actual metal thicknesses in small regions can be verified by comparing the optical densities of section of x-ray film of test object with the known thickness of similar metal stepwedge.

It is another object of the invention to provide an improved method of metal thickness measurements in which both the test object and the stepwedge are exposed simultaneously on the same X-ray film.

These and other advantages, objects and features of the invention will become more apparent after considering the following description taken in conjunction with the illustrative embodiment in the accompanying drawings.

BRIEF DESCRIPTION OF THE DRAWINGS

Figure 1 is a perspective view of a test object and a stepwedge in their relative positions on an x-ray film according to the present method of metal thickness measurements, and,

Figure 2 is a graphical representation of an exposed x-ray film.

DESCRIPTION OF THE PREFERRED EMBODIMENT

Referring now to Figure 1, there is shown the relative positions of the components that are involved in process of metal thickness measurements using the radiographic technique.

A fabricated metallic structure 10 which for the purposes of this example, has formed on it's top surface a formed rib 12 and a welded joint 14. A stepwedge 16 which has a number of segments of predetermined thicknesses is provided as a comparison calibration guage or standard. In order to make actual metal thickness measurements of the structure 10 by radiographic exposure, the fabricated structure 10 and the stepwedge 16 are placed upon a sheet of x-ray film 18. The stepwedge 16 is constructed of material that is the same as or substantially similar to the material of the fabricated structure 10. The test piece and the comparison guage are simultaneously exposed to radiographic radiation, such as x-rays. Once the x-ray film is developed, the exposed x-ray film contains an accurate representation of the metal thickness or consistency for both the fabricated structure 10 and the stepwedge. A comparator microphotometer is utilized to determine the effective metal thickness of the fabricated structure 10.

Figure 2 is a graphical representation of the exposed x-ray film, 20. A comparator microphotometer which is not shown, may be utilized for determining the optical densities of the test object in various regions of interest. For example, a minimum thickness which may be required for the rib, 12, may be represented in the stepwedge for direct comparison therewith. In addition, minimum thickness requirements of the fabricated

structure 10 may be directly verified by comparison with the exposed profiles of the stepwedge on the x-ray film.

In Figure 1, specific example areas of interest have been designated t, t_1 and t_2. The stepwedge 16 has an area that is designated X which represents the minimum thickness that is required for the fabricated structure 10. Since the thickness, t represents a portion of the fabricated metal structure 10 in which a minimum thickness 'X' is required for EMI or RFI shielding, it is necessary that the thickness t be greater than the dimension X of the stepwedge 16. The two forming processes that are shown, produced thicknesses, t_1, at the apex of the rib 12 and the thickness, t_2, at the point in the welded joint 14 where there is a void in the material. This technique of radiographic inspection and measurement simultaneously exposes both the metal part and stepwedge to x-ray radiation which is applied perpendicularly to the objects and the x-ray film. The x ray film which is positioned beneath the test objects is simultaneously exposed with the test part and stepwedge. The optical densities of the two suspect regions are then compared against the optical densities of the stepwedge with a thickness X (and X $\pm$ s). The match with a respective section of the stepwedge indicates the thickness values of t_1 and t_2.

Although the invention has been described with reference to a particular embodiment, it will be understood to those skilled

in the art that the invention is capable of a variety of alternative embodiments within the spirit and scope of the appended claims.

What is claimed is:

Claims not included

ABSTRACT OF THE DISCLOSURE

Cont'd

The subject invention comprises a process for assuring metal thickness in small regions. The actual metal thickness of small regions can be verified by comparing the optical densities of sections of the metal under test with a known thickness of a similar metal i.e. stepwedge. A comparator microphotometer, which compares optical densities of spectrum lines from spectrophotometers, compares the optical density of spectrum lines on an exposed spectrum plate (metal under test) with a standard plate (stepwedge).

AF Inv. #16,647

P. M. Achrekar

FIGURE 1

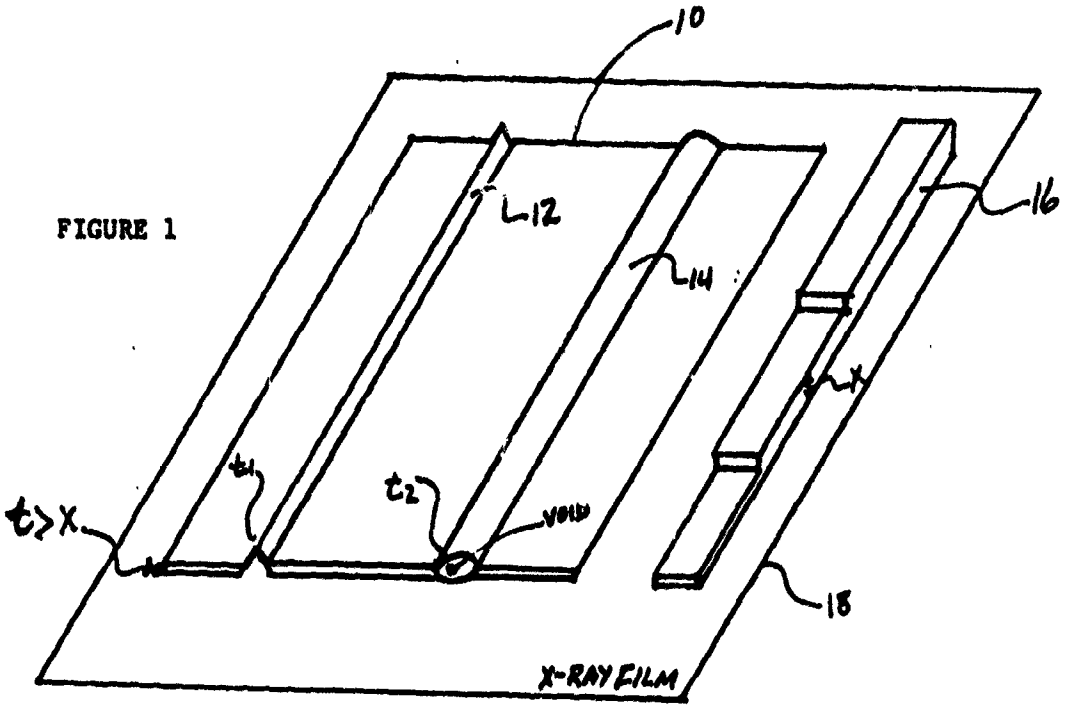
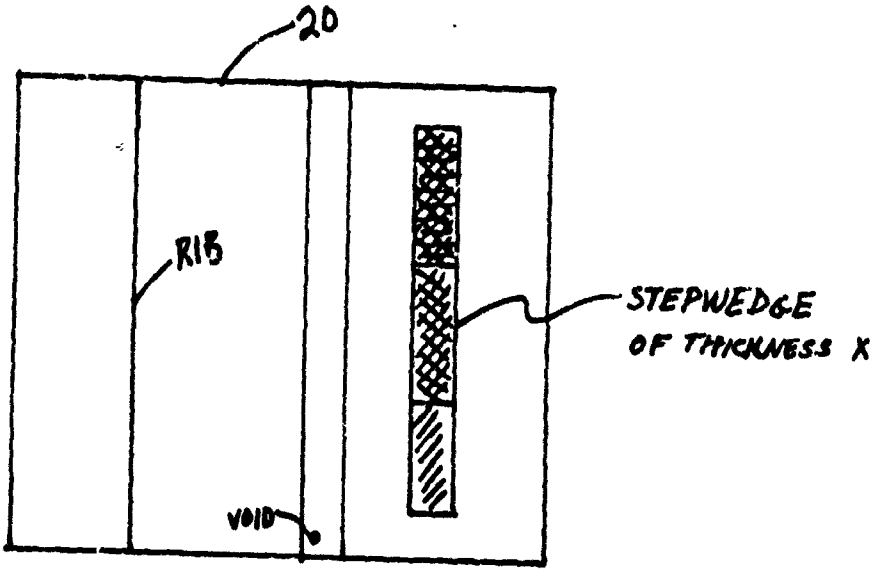
FIGURE 2