UNCLASSIFIED

AD NUMBER

ADC952624

CLASSIFICATION CHANGES

TO: unclassified

FROM: secret

LIMITATION CHANGES

TO:

Approved for public release, distribution unlimited

FROM:

Distribution authorized to U.S. Gov't. agencies and their contractors; Specific Authority;Apr 52. Other requests shall be referred to Naval Research Lab. Washington, DC.

AUTHORITY

NRL Memo. 11 Jun 1997; Same

THIS PAGE IS UNCLASSIFIED

UNANNOUNCED

SECRET
Security Information

NRL REPORT 3950
COPY NO. 30

C952624

A METHOD OF TARGET DATA PICK-OFF AND DISPLAY[S]

P. L. Wedding

Systems Utilization Branch
Radio Division II

AD-143999

FINISH FILE

LIBRARY OF CONGRESS
REFERENCE DEPARTMENT
TECHNICAL INFORMATION DIVISION
FORMERLY
(NAVY RESEARCH SECTION)

April 3, 1952

DTIC
ELECTE
APR 23 1984
S D
D

NOV 1 1952

Declassify on: OADR
Authority: DoD 5200.1-R, Para. 4-401.B2

NAVAL RESEARCH LABORATORY

WASHINGTON, D.C.

RECEIVED
OPNAV
CENTRAL MAIL SECTION
APR 4 1952

84 04 20 555

009442

SECRET

SECURITY

This document contains information affecting the national defense of the United States within the meaning of the Espionage Laws, Title 18, U.S.C., Sections 793 and 794. The transmission or the revelation of its contents in any manner to an unauthorized person is prohibited by law.

Reproduction of this document in any form by other than activities of the Department of Defense and the Atomic Energy Commission is not authorized unless specifically approved by the Secretary of the Navy or the Chief of Naval Operations as appropriate.

ABSTRACT

An interim intercept control system to aid in the rapid dissemination of pertinent radar data for interceptor control, proposed by NRL and now under development, together with other related redevelopments is presented. An overall examination of the system and its functions, and a breakdown into individual components with their function and operation are included. The information is handled two paths, a summary plotting-board path and an intercept-control path. The processes analyzed include: the pick-off of data, summary plotting, smoothing operations, servo operation, intercept-control plotting, and power generation. Tracking integrators for prediction and smoothing are presented in a separate NRL report, "An Electronic Method of Smoothing Target Data" by G. C. Winston. A cursory treatment of the functions of the tracking integrators is included here for purposes of continuity and clarity. The system presents a simple method of processing and displaying radar data by means of electrical potentials with a resultant speedup in interceptor control procedures.

PROBLEM STATUS

This is an interim report; work on the problem is continuing.

AUTHORIZATION

NRL Problems R07-25 and R07-44
RDB Projects NR 507-250 and NE 050-205

Manuscript submitted February 20, 1952

UNANNOUNCED

A METHOD OF TARGET DATA PICK-OFF AND DISPLAY [S]

CONTENTS

INTRODUCTION	1
SYSTEM OPERATION	2
Summary Board Path	4
Intercept Control Path	4
PICK-OFF UNIT	5
Selector Switch	9
Pick-Off Stylus	9
SERVO AMPLIFIER AND POWER SUPPLY	11
Position Supply	14
SUMMARY PLOTTING BOARD	14
INTERCEPT PLOTTING BOARDS	18
Tracking Integrators	19
Smoothing Operations	22
Time Sharing	24
INTERCEPT CONSOLE	24
CONCLUSIONS	25

Accession For
NTIS GRA&I ☐
DTIC TAB ☐
Unannounced ☒
Justification
By
Distribution/
Availability Codes
Dist | Avail and/or Special
9

DTIC COPY INSPECTED 2

DTIC ELECTE APR 23 1984 S D
D

A METHOD OF TARGET DATA PICK-OFF AND DISPLAY

INTRODUCTION

Offensive striking power is a most important factor in the composition of a naval task group. Impairment of this striking power, from any cause, greatly reduces the effectiveness of the force as an offensive weapon. Therefore, effective means for defense must be provided. One of the greatest threats to the safety of naval units is enemy aircraft. The rapid evolutionary development of high-speed, high-altitude aircraft has complicated the problem of defense primarily because of the reduced time available to institute defensive action. Aids must be devised to provide more efficient utilization of the available time to increase the security of the group. The Automatic Aircraft Intercept Control System (AAICS)[1] is a long-term project aimed at providing means for the automatic solution of the problems of intercept control. However, much more work needs to be done before it is ready for introduction into the fleet. During the intervening period it would appear desirable to develop an interim system[2] to aid the Navy in coping with the problem of air defense. The objective of such a system would be to improve, at the earliest possible date, the capability of the Navy in the control of intercept aircraft with the least disruption of existing facilities and established doctrine. Such equipment should contain design features that will permit the smooth evolutionary transition from such a system to the long-term AAICS, with full compatability being maintained during the process.

Any system which required major modifications or redesign of existing equipment would defeat the purpose of an interim system; therefore, considering the fact that a major change in CIC equipment installations aboard naval vessels would require considerable time and markedly curtail the operation of the ships during the conversion period, the design of the interim intercept control system should be based, so far as practicable, on existing radar and indicator equipments, and should involve only minor modifications of present equipment.

Results of studies indicate that most of the difficulties and limitations of the present manual intercept direction system stem from the manual processing of target data, oral transmission, subsequent manual replotting, and the necessary conversion to grid coordinates for transmission to other ships. In the method now used by the fleet, the data is derived in polar coordinates, the form presented by the radar indicator, and is transmitted

---

[1] Riccobono, S., "Automatic Aircraft Intercept Control System Study," NRL Report R-3342 (Secret), 30 August 1948

[2] Paine, H. G., "An Electronic Aid for Aircraft Tracking and Interception," NRL Report 3665 (Secret), 27 April 1950

and replotted in the same form.[3] With a task-force defense control net for coordination of target data between ships, a common rectangular coordinate overlay is superimposed on the polar display and conversion from polar to rectangular coordinates is obtained by reading target position on the grid. The system herein discussed has provisions for the elimination of most of these difficulties and limitations.

In the interim system, a data pick-off unit derives electrical position data in rectangular coordinates from a standard radar indicator, such as the VK. In its simplest form no modification to the indicator would be necessary other than the mounting of a bracket to hold the pick-off unit. Electrical transmission of the data to the points of usage replaces oral transmission, and automatic plotting boards display the target data at these points, thus eliminating manual plotting and reducing the time interval. The electrical coordinate data thus derived is in a form that will facilitate correlation with a task force grid system.

Such a system can be introduced with a minimum disruption of fleet service. It is sufficiently flexible so that the normal growth and evolution anticipated in the next few years, leading to a more refined intercept control system, can be easily effected.

The purpose of this report is to discuss the progress made and the present state of development of the interim intercept control system. Before describing the individual parts, a discussion of the functional operation of the system will be presented.

SYSTEM OPERATION

The system performs several functions in its operation. These are (1) data pick-off, (2) summary plotting of all discrete data points, (3) smoothing and prediction of target tracks, and (4) plotting of smoothed continuous target tracks for interceptor control.

Data pick-off, as used herein, means the electrical determination of a target position as displayed on a PPI. Target position is determined in rectangular coordinates with relation to the PPI origin, or, when desired, to an origin that is related to a task-force grid. Scaled dc voltages, used for the representation of all target positions, reduce the circuit complexity, and avoid the complications of involved phase-measuring devices. This type of data lends itself readily to a coded type of data transmission to other ships.

A functional diagram of the interim intercept-control system is shown in Figure 1. The point of injecting altitude and identity information into the system is indicated in the diagram. The equipment necessary to provide the data links for altitude and identity information shown in the diagram is under development, but in general this report will be confined to a discussion of progress made in the development of that part of the system which processes the horizontal position data. The source of horizontal position data is a PPI display on a standard radar indicator. The origin of the electrical position data is the pick-off unit which is mounted on the indicator.

Use of the discrete position target data derived from the pick-off unit may be divided into two categories. First, the data is used to feed an automatic summary plotting board where the discrete position of every target tracked by the pick-off operator is plotted on the board at the instant that its position is determined by the operator. Second, the data is used to feed a group of tracking integrators, whose special purpose is the generation of

[3] "Procedures for Shipboard Detection, Control and Interception of High Speed, High Altitude Airplanes," Fleet, OpDevFor, Third Partial Report on Project OP/V42/S67-5 (Revised) (Secret), 7 November 1949

continuous smoothed target data for each selected target. These continuous data, which contain useful position prediction between data points, are then fed in selected pairs to the automatic intercept plotting boards. A complete description of each of these units with the necessary supplies and auxiliaries will be given later.

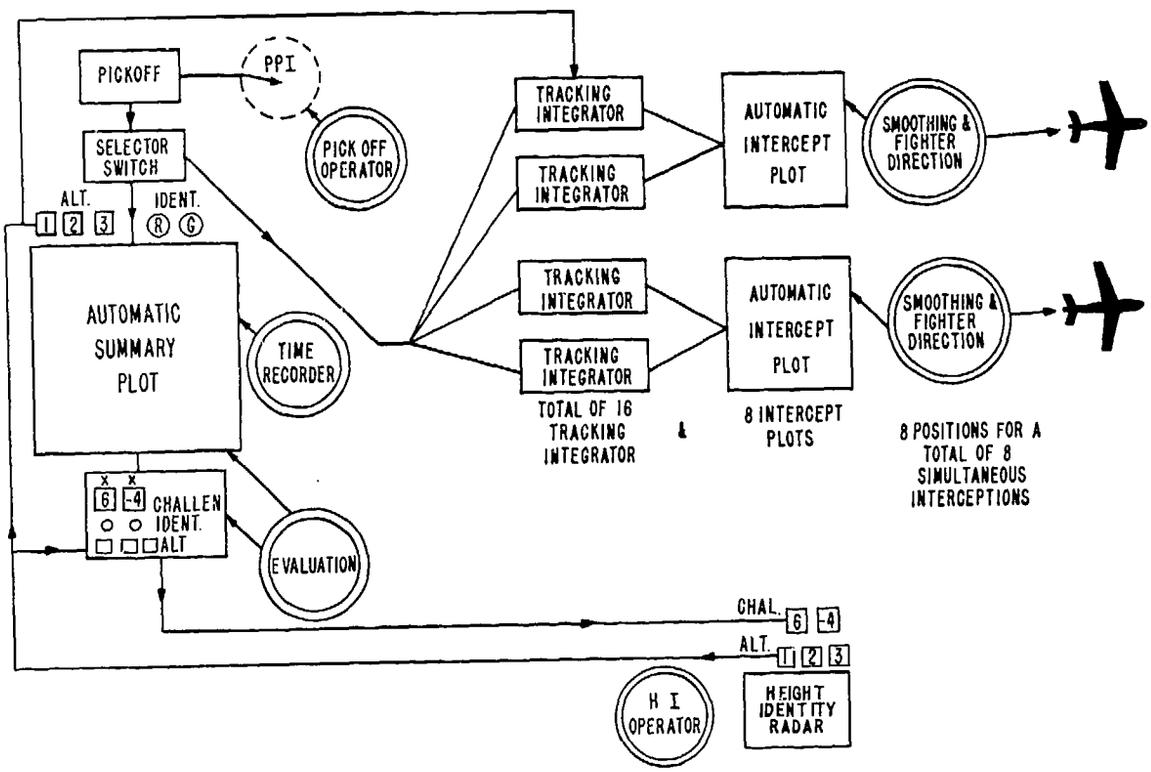

Figure 1 - Functional diagram of interim system

The flow of electrical data from the pick-off unit into the two paths indicated in Figure 1 is controlled by the pick-off operator by means of a selector switch. This switch contains sixteen channel-selector buttons corresponding to the sixteen tracking integrators. Briefly, its purpose is to channel discrete position data to the tracking integrator selected by the pick-off operator; and to cause that position to be marked simultaneously on the automatic summary plotting board. This simultaneous marking occurs regardless of which of the sixteen buttons is pressed.

The operation of the entire system will be made clearer by a step by step description of the sequence of events accompanying the data flow into the two paths just described.

Summary Board Path

The sequence of events accompanying the flow of data to the automatic summary board is as follows:

1. The presence of a new target is detected on a PPI indicator by the pick-off operator.

2. The pick-off operator moves the pick-off unit carriage to position the stylus over the target pip on the PPI. This moves the slider arms of the helipots to correspond to that position.

3. The voltage determined by the position of the helipot slider arms is continuously fed to the servo amplifiers of the summary board. The servo amplifiers drive the motors on the summary board so that they cause the carriage always to follow the pick-off unit.

4. When a final position of the pick-off unit stylus is obtained by the pick-off operator, the summary-board carriage positions on that point.

5. A selector button is pushed which corresponds to an assigned target number. Pressing the selector button also energizes the marking solenoid on the summary plotting board, thus making a mark at the position corresponding to the target's geographic location.

6. This procedure is repeated for all targets detected and tracked by the pick-off operator.

7. By this process each new position of the target is immediately plotted automatically and a complete up-to-date plot of the area covered by the summary board is maintained.

8. Provision is made in the system for the evaluator to request the height, and identity radar operator for target altitude and identity at any time and when a new target is plotted on the summary board.

The electrical path of data to the tracking integrators uses the pick-off unit and selector switch in common with the summary-board path. The process of picking off the data and actuating the selector switch is common to both paths. The intercept boards do not follow the pick-off unit as it moves over the scope face since they obtain their control voltages from the output of the tracking integrators.

Intercept Control Path

The sequence of events associated with the flow of data to the intercept controller's display part of the system is as follows:

1. When the stylus of the pick-off unit has been positioned on a target, a selector button on the selector switch corresponding to that target's number is pushed.

2. The selector switch channels the position voltages to the tracking integrator corresponding to that target's number.

3. The integrator uses the discrete positions from the pick-off unit as initial conditions and integrates a course and speed derived from the smoothing mechanism, controlled by the smoothing operator, to obtain a track between pick-off points.

4. The output of the tracking integrators is fed to a time-sharing network. This network divides the duty cycle of the plotting head on the intercept board between the tracks of the intercept aircraft and the bogey. The output of the time-sharing network is fed to the servo amplifier for the intercept board, which drives the motors for a plot of the target track. The track on the intercept board is viewed by the smoothing operator and the intercept controller (which may be the same person).

5. Using the information being plotted on the intercept board, the smoothing operator makes corrections in the course and speed being fed into the tracking integrator to obtain a smooth track of the targets.

6. The intercept controller, using the information being plotted on the intercept board and that available on the smoothing panel carries out his interception.

A possible physical arrangement of the system in a CIC (Combat Information Center) is shown in Figure 2. In the center background, mounted on the wall, is the summary plotting board. Along each wall of the room are placed four intercept consoles. Each of these consoles contains an intercept board, two smoothing-operator panels, two tracking integrators, two servo amplifiers, and all the associated power supplies. At the left is a radar console for determination of height and identity information. Mounted on the console is the challenge indicator for height and identity data. On the right are two PPI indicators with pick-off units and selector switches mounted on them. In the center foreground is the evaluator's console containing the altitude-identity challenge controls and circuits.

PICK-OFF UNIT

The pick-off unit of the system provides the means for converting the target position, as presented on the radar indicator, into electrical data suitable for processing by the system. Electrical data is derived in the form of dc potentials proportional to the physical displacement of the target pip on the radar indicator in relation to the indicator origin. In order to permit easy correlation to a task force grid, the target position potentials are derived in rectangular coordinates. The coordinates have a magnitude and sense directly related to the radar indicator position of the target.

There are several means of deriving the target position in rectangular coordinates with a pick-off device. The pick-off unit originally used in the interim system derived the target potentials from a linear potentiometer and a sine-cosine potentiometer. In that method the position of the linear potentiometer's slider was a measure of the range of the target. The range voltage was multiplied by the sine and cosine of the azimuth angle to determine the X and Y coordinates of the target. Multiplication was accomplished by feeding the range voltage from the linear potentiometer into a sine-cosine potentiometer and obtaining the X and Y components of the voltage at the output terminals of the sine-cosine potentiometer. This type of pick-off device was used originally in the system, because it was thought that the ease of motion of the stylus would have psychological advantages from the operator's point of view. Electrically, however, the sine-cosine potentiometer presented some difficulties because of inherent errors in construction, which caused an unbalanced output. Compensation for this drawback was obtained by using a differential amplifier to subtract the two components of the sine and two components of the cosine to reduce the error to a minimum.

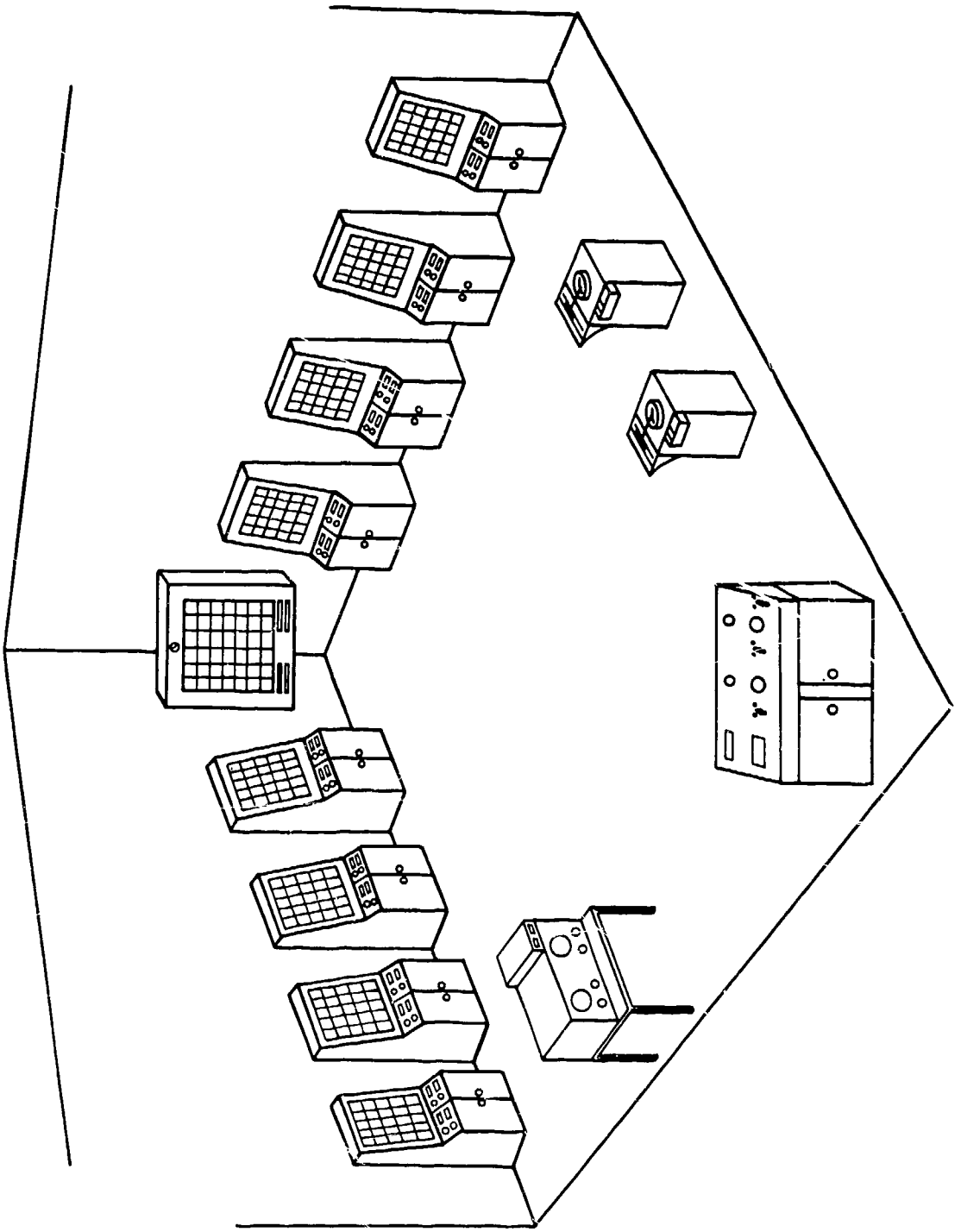

Figure 2 - Possible physical layout of the system

A second means of deriving the target position in rectangular coordinates is by the use of two linear potentiometers with their axis of rotation at right angles to each other. The rotation of one potentiometer produces an X component and the rotation of the other, a Y component of the target position. The electrical circuitry of this type of pick-off is shown in Figure 3. By placing a scaled dc voltage, balanced to ground across the potentiometers, A and B, the sliders of the potentiometers have a voltage on them, positive or negative in relation to ground, proportional to the positive or negative displacement of the potentiometers from their midpoint. The position of the sliders on the potentiometers, A and B, is controlled by a mechanical pick-off unit. As either slider arm, A or B, moves across its potentiometer, the voltage on the slider is proportional to the displacement of the stylus in either the positive or negative direction along its axis. The combination of the voltage readings on slider arms A and B define a point in X and Y coordinates in relation to a PPI origin. This point is the derived electrical location of a target on the PPI. In order to maintain a true proportionality between the voltages and the target position, the scaled dc voltages used on the potentiometers are a function of the maximum range of the PPI indicator on a specific range setting. Since these voltages are scaled to correspond to the maximum range, the voltage on the slider of the potentiometer has a direct relation to the target's radar position.

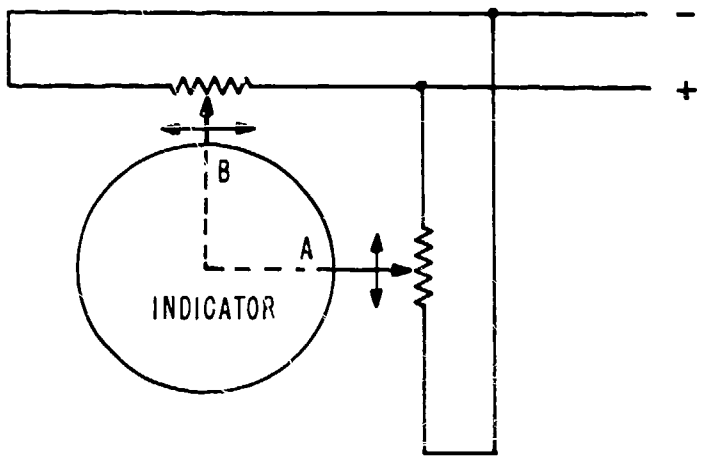

Figure 3 - Schematic of pick-off unit

The mechanical construction of an experimental model of a rectangular pick-off unit using linear potentiometers is shown in Figure 4 and the mounting in Figure 5. The pick-off unit is essentially a rack-and-gear-driven voltage divider system which is normally mounted on a radar indicator, such as the VK, with reflection plotter head[4] and is oriented to correspond to the indicator radar presentation. The voltage divider action is obtained from two, three-turn helipots, gear-driven from a rack. One helipot derives the north-south (Y) component of position and the other derives the east-west (X) component. This particular construction has many advantages over the sine-cosine type. It eliminates the extra circuit complexity by the use of linear potentiometers; the motion of the stylus is relatively easy and smooth, and it is also more rugged and reliable, depending only on the motion of the slider arm of a helipot for determination of position voltages.

[4] Paine, H. G., "Marking on Reflection Plotters," NRL Letter Report C-3950-132A/51 (Confidential), 23 May 1951

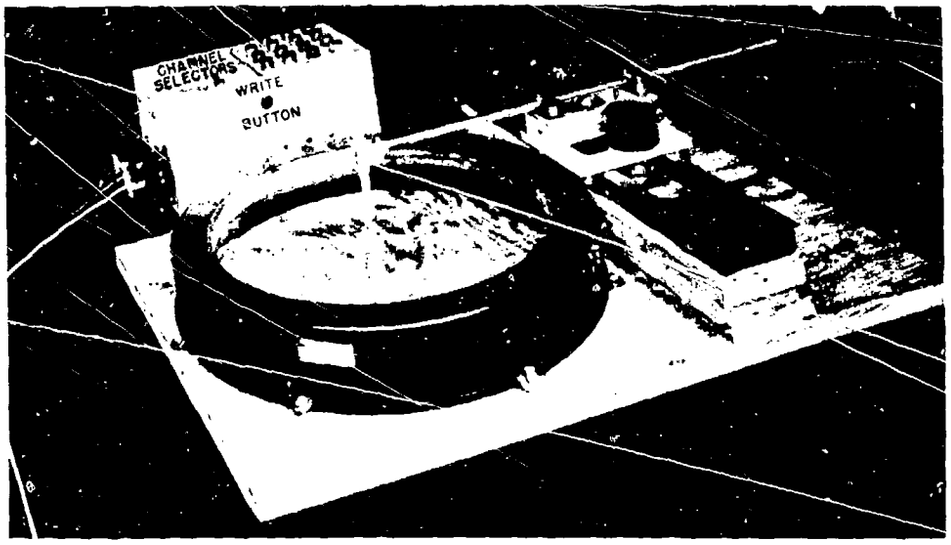

Figure 4 - Experimental model of pick-off unit (side view)

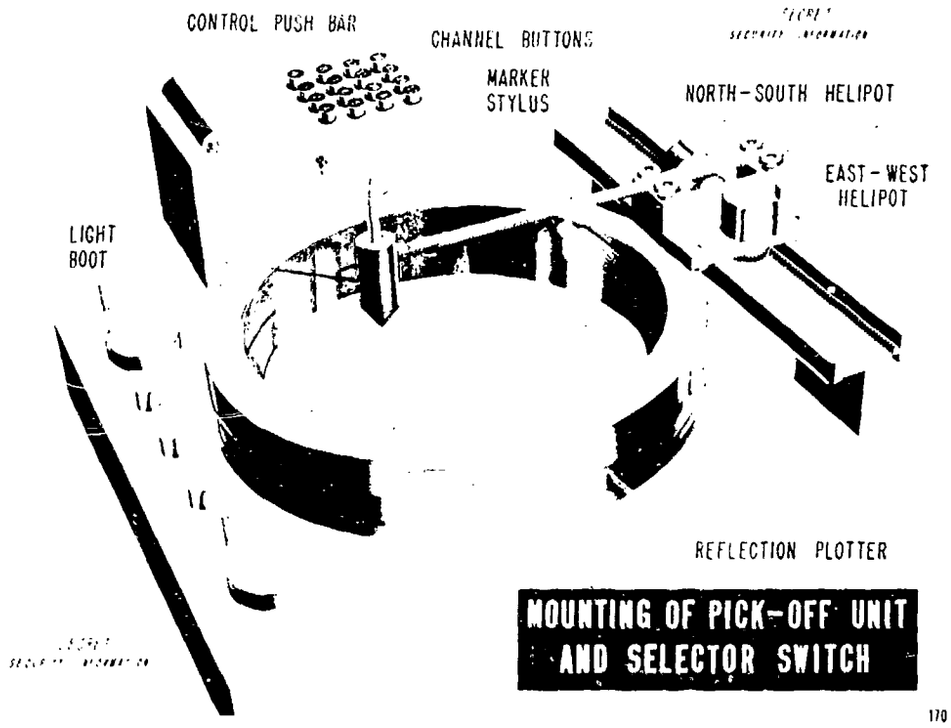

Figure 5 - Mounting of pick-off unit and selector switch

The motion of the marker stylus over the scope face in the north-south (Y) direction moves a slider arm which slides between ball-bearing pulleys. A rack gear, mounted in this slider arm meshes with a gear mounted on the shaft of the N-S helipot; so that, as the arm is moved, the slider of the helipot is rotated to a position proportional to the linear displacement of the stylus on the PPI face.

The motion of the stylus in the east-west (X) direction moves a carriage along a set of rails. A rack gear, mounted in one of these rails, meshes with a gear on the shaft of the E-W helipot producing the same result as on the N-S helipot.

Selector Switch

The information derived on the sliders of the helipots is channelled to the points of usage by a selector switch. The switch is pictured in Figures 4 and 5 and a schematic of the switch is shown in Figure 6. The switch performs two functions: (a) it energizes the marking circuit to make a mark on the summary plotting board for target position; and (b) it channels, for further processing, discrete position information to a tracking integrator corresponding to the target number. Provision is also included in the latest switch for the use of two pick-off units with a single summary plotting board.

The switch consists of sixteen channel-selector buttons, one write button and the summary-board control switch. Each of the channel-selector button switches is a two break-make push-button plunger switch which operates on a roller making its motion almost frictionless and effortless. One "make" leaf of all the channel-selector switches is in parallel and connected to the summary board solenoid. Therefore, whenever any channel-selector switch is pushed, the position of the pick-off stylus is marked on the board. The other "make" circuits on the switches are connected to relays mounted on the tracking integrators so that when any of these buttons are pushed, the relay on the corresponding tracking integrator is energized, thus putting the position voltages for a target into that tracking integrator.

The "write" button energizes a vibrator whose contacts are in parallel with the marking circuit for the summary board. When the write button is depressed, the summary board solenoid is energized intermittently so that the marker does not rub while writing.

The summary-board control switch makes provision for the use of two pick-off units with a single summary plotting board. This is accomplished by switching the input voltages to the servo amplifier from one pick-off unit to the other. The control is performed with the aid of a switch on each selector switch box which energizes a solenoid for switching the position voltages of that pick-off unit into the inputs of the servo amplifier. As long as the switch is kept depressed the other pick-off operator cannot get control of the summary board. This provision is included so that two pick-off operators can feed target information to the summary board without conflict at the servo amplifier. A light is used to indicate to the pick-off operator that he has control of the summary board.

Pick-Off Stylus

The pick-off operator, for most efficient use of the pick-off unit, should have the past history of a target plotted on his reflection plotter overlay on the radar indicator to aid him in determining the proper channel to feed the target data.

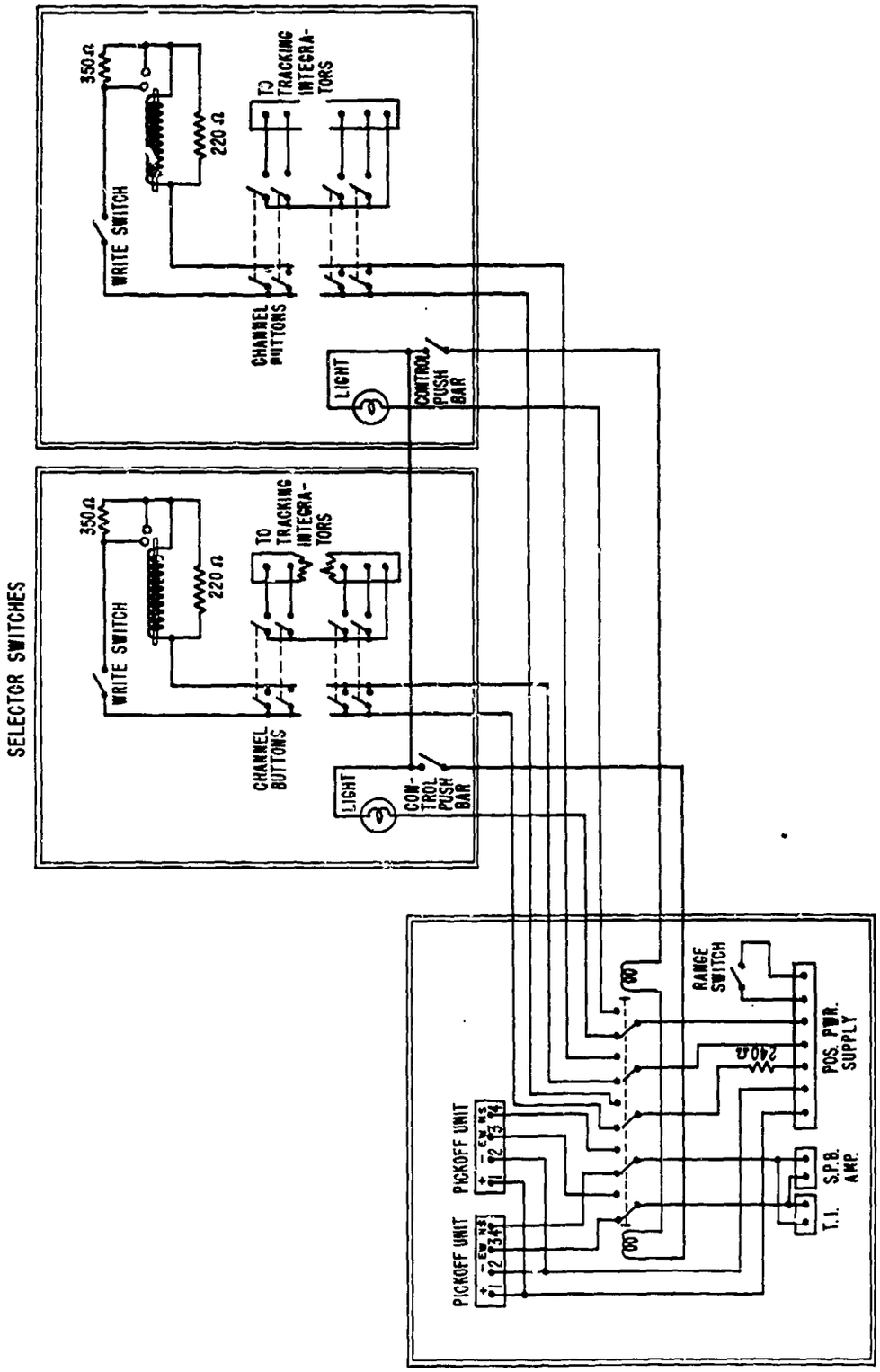

Figure 6 - Selector switch schematic

The present method using a china-marking or "grease" pencil was found to be unsatisfactory for use with a pick-off unit of the type used in the interim intercept system. The china-marking pencil was too blunt for good accuracy of marking and it did not consistently dot well since it required a wiping motion to make a mark. For these reasons another means of marking target position on the glass surface of the reflection plotter was needed. A rigid pointer which dotted well and used a quick-drying fluid seemed to be the answer. A unit which seemed to satisfy these requirements was a pen similar to the Leroy lettering pen or the Inkograph fountain pen. A unit of this type was built for tests.[5]

The marking fluid posed the next problem. The fluid would have to have properties to satisfy the requirements of the system. It would have to dot well on glass and leave a visible mark. It would have to be reflected on the lower surface of the reflection plotter and it would have to be quick drying to prevent smearing as the pick-off operator's hand moved over the reflection plotter surface. The Chemistry Division of the Laboratory has developed several fluids which seem adequate for the purpose. However, work is continuing on the development of a better fluid.

Provision has been made for placing a light-boot on the pick-off stylus. This light-boot forms a ring of light around the pointer of the stylus to aid in positioning the stylus before it comes in contact with the glass surface of the reflection plotter. This feature is included to speed up the pick-off operation by making it easier for the pick-off operator to position his stylus over a target. The pick-off stylus is shown in Figures 4 and 5 mounted on the movable arm of the pick-off unit.

SERVO AMPLIFIER AND POWER SUPPLY

The servo amplifiers and their associated power supply are shown in Figure 7. The schematic of the servo amplifier is given in Figure 8, and the power supply in Figure 9.

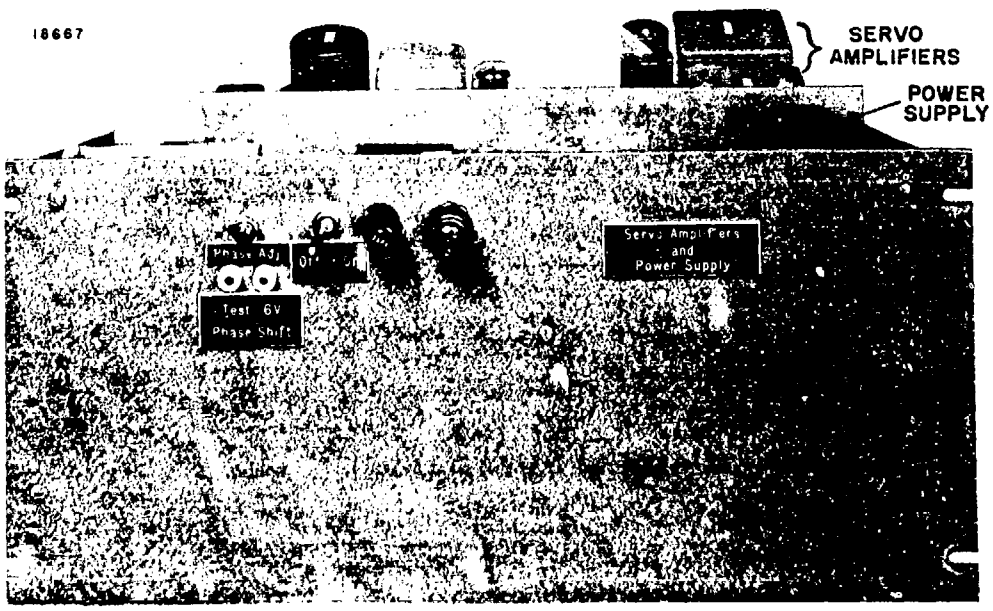

Figure 7 - Servo amplifier and power supply

[5] Ibid.

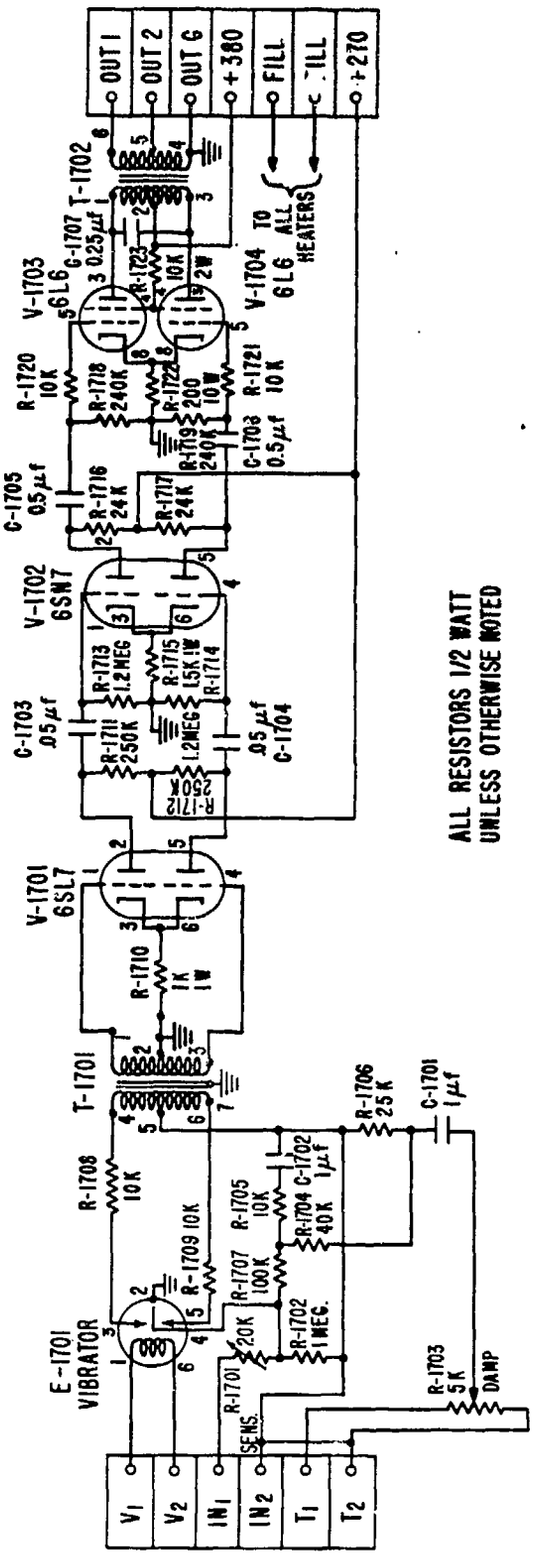

Figure 8 - Servo amplifier schematic

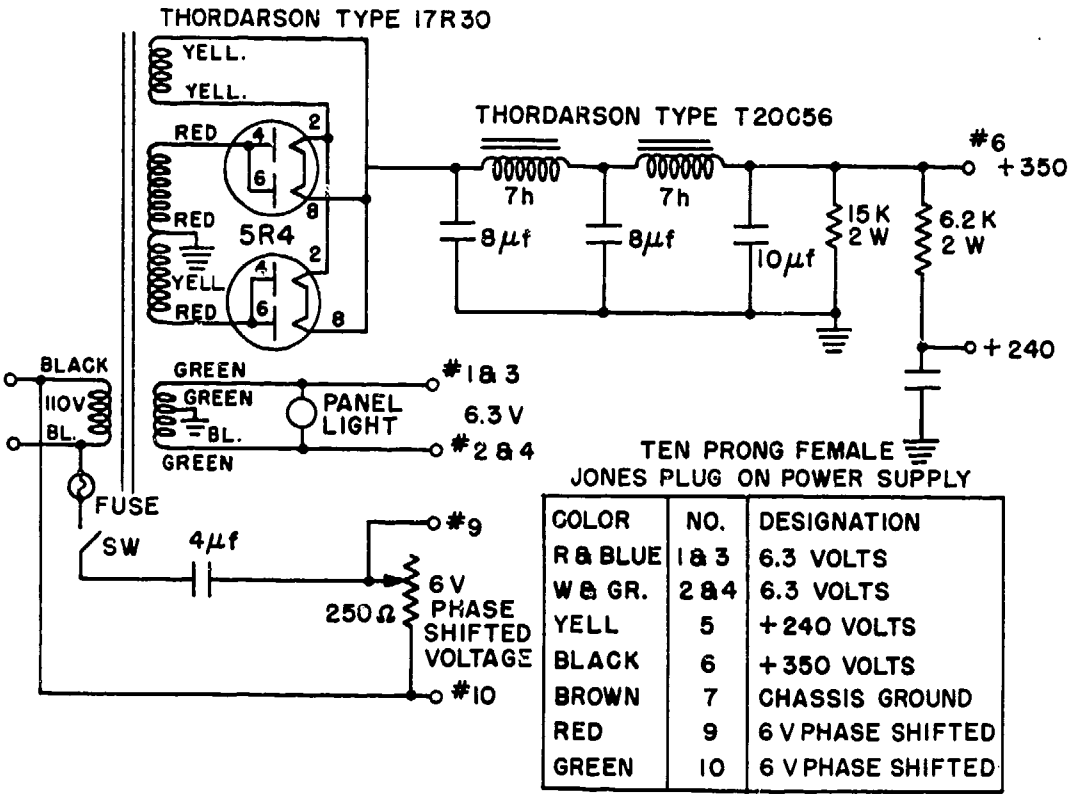

TEN PRONG FEMALE JONES PLUG ON POWER SUPPLY

COLOR	NO.	DESIGNATION
R & BLUE	1 & 3	6.3 VOLTS
W & GR.	2 & 4	6.3 VOLTS
YELL	5	+240 VOLTS
BLACK	6	+350 VOLTS
BROWN	7	CHASSIS GROUND
RED	9	6 V PHASE SHIFTED
GREEN	10	6 V PHASE SHIFTED

Figure 9 - Servo amplifier power supply

The power supply is a simple straightforward dc power supply which gives 350 volts and 270 volts dc. The servo amplifier is a commercial unit built by Reeves Instrument Corporation. It consists of a dc input circuit with a chopper to change the input to ac for amplification, and a series of push-pull stages for amplification of the difference volta The output of the servo amplifier is fed to the control phase of a two-phase ac servo m which drives the carriage to obtain a null.

Since a two-phase ac servo motor is used in the system, it is desirable to convert the dc voltages obtained from the position potentiometer to ac. A "Brown Converter" (chopper) performs this function. The converter is placed in the input stage of the servo amplifier before any dc amplification. This is done to avoid the difficulties inherent in dc amplification. The chopper converts the dc signal to an ac signal that has a 90-degree phase relation to the reference phase on the servo motor. The "Brown Converter" employs an electromagnetically driven vibrating reed which carries a circuit-closing contact and normally shorts both contacts until driven by the applied 60-cycle polarizing voltage. The polarizing voltage used is 6 volts, 60 cycle, phase-shifted approximately 90 degrees in relation to the reference phase by a phase-shifting network in the servo-amplifier power supply. With the polarizing voltage applied, the reed action is such that one contact is closed during the positive half of the cycle and the other during the negative half of the cycle. The output of the chopper is fed to a transformer and then to a series of push-pull stages for amplification. The output stage of the amplifier feeds the control phase of the servo motor.

Position Supply

The position supply is a well-regulated dc power supply used for producing the voltages for the helipots on the pick-off unit and plotting boards. The supply has two voltage ranges, ±100 volts and ±40 volts. Since the system is arbitrarily set up to a scale of two miles to the volt, these voltages correspond to ranges of 200 and 80 miles in the system. Several other features are incorporated in this supply. A safety factor is provided by a relay network which prevents changing the scale on the pick-off unit from the 80- to the 200-mile scale while the plotting board is on the 80-mile scale. If it were possible to make such a scale change, the plotting board would tend to be driven past its limits. A picture of the supply is given in Figure 10 and a schematic in Figure 11.

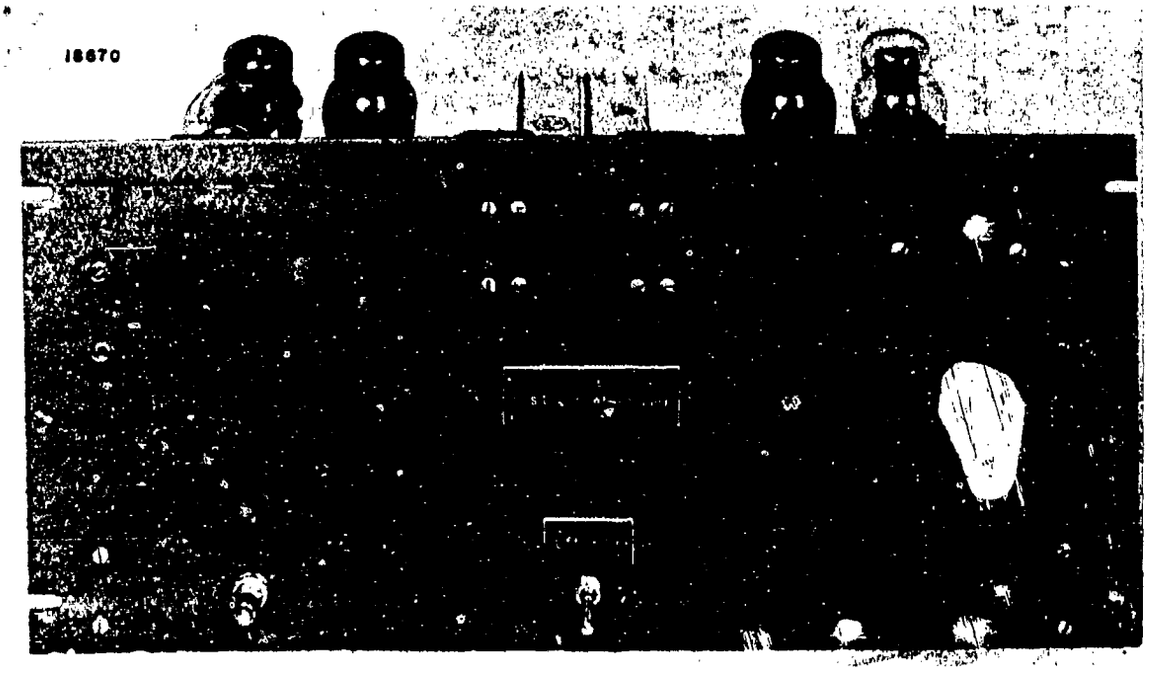

Figure 10 - Position power supply

SUMMARY PLOTTING BOARD

The summary plotting board is shown in Figures 12, 13, and 14. It consists of a square frame of aluminum stock upon which is mounted the mechanism of the summary plot, an engraved plastic overlay, and a roll of plotting paper. The mechanism for each direction consists of a set of four pulleys, each pair of which are connected to a rod passing through the frame. The pulleys on the same side of the frame are engaged by a thin metal tape so that a parallel relation between the center points of the tapes is always maintained. It has been found in tests that this thin metal tape grips the pulleys very well so that there is no slippage of the tape in operation even under extra-heavy loads. Between the center points of the tape is mounted a piece of 3/16 drill rod. The pulleys are driven by a gear train meshing with the servo motor. As the pulley turns, the tape moves back or forth, corresponding to the position of the stylus of the pick-off unit. The position on the summary board is obtained from a ten-turn helipot which meshes with the drive gear train. At the intersection of the two cross arms is mounted a carriage which moves along the drill rods

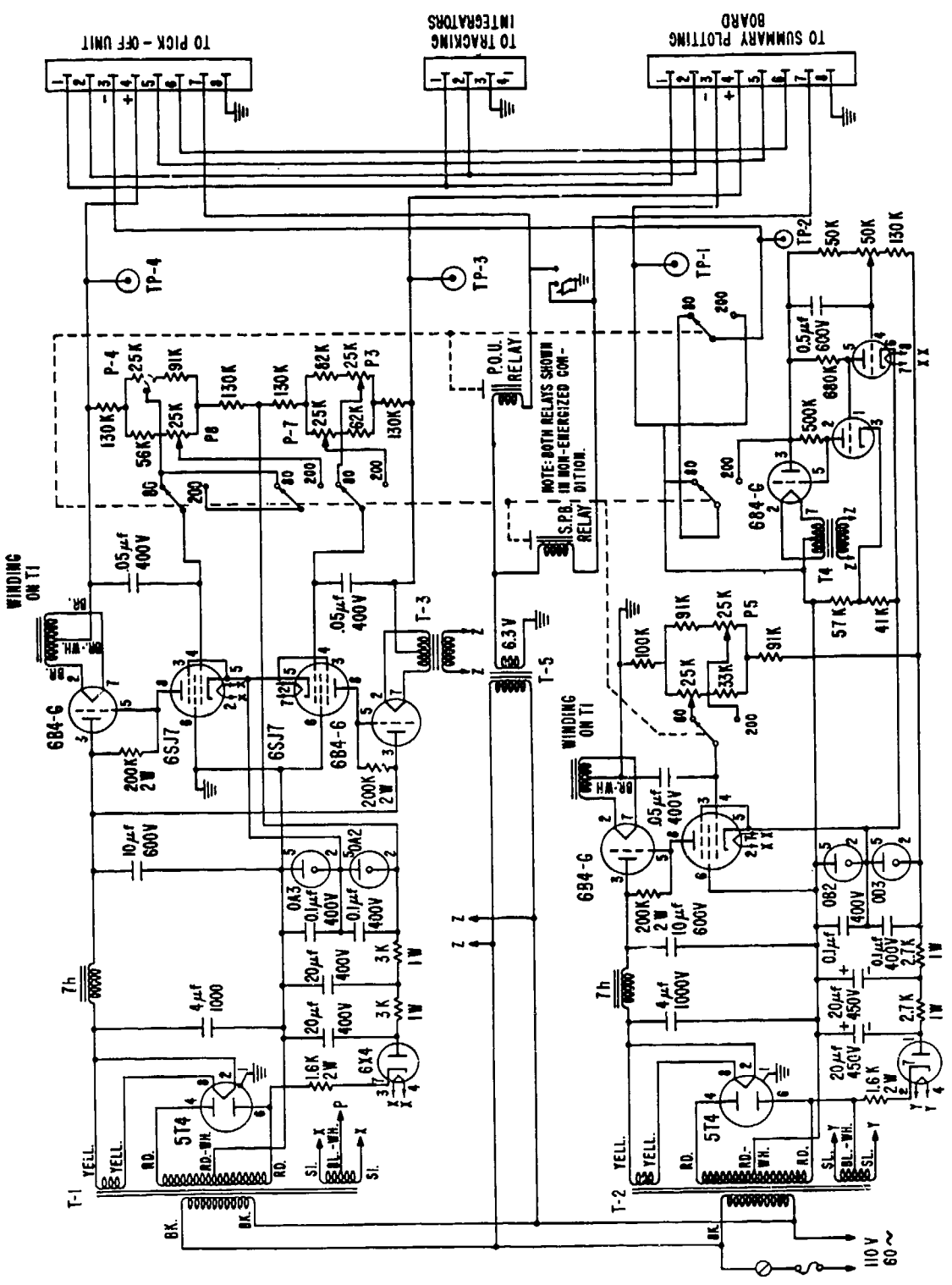

Figure 11 - Position power supply schematic

to correspond to the position taken by its drive tapes. On this carriage is the marker, which consists of a small solenoid with a soft iron slug in which is mounted a brass tube. On the end of the tube is a small stamp. When a switch is pressed at the pick-off unit, the solenoid is energized, driving the stamp up against the plotting paper on the board and making a mark. The board is covered with a plastic overlay upon which is engraved a grid system and a polar plot. The paper is held against the underside of this overlay and acts as the plotting surface. The overlay is both edge and background lighted.

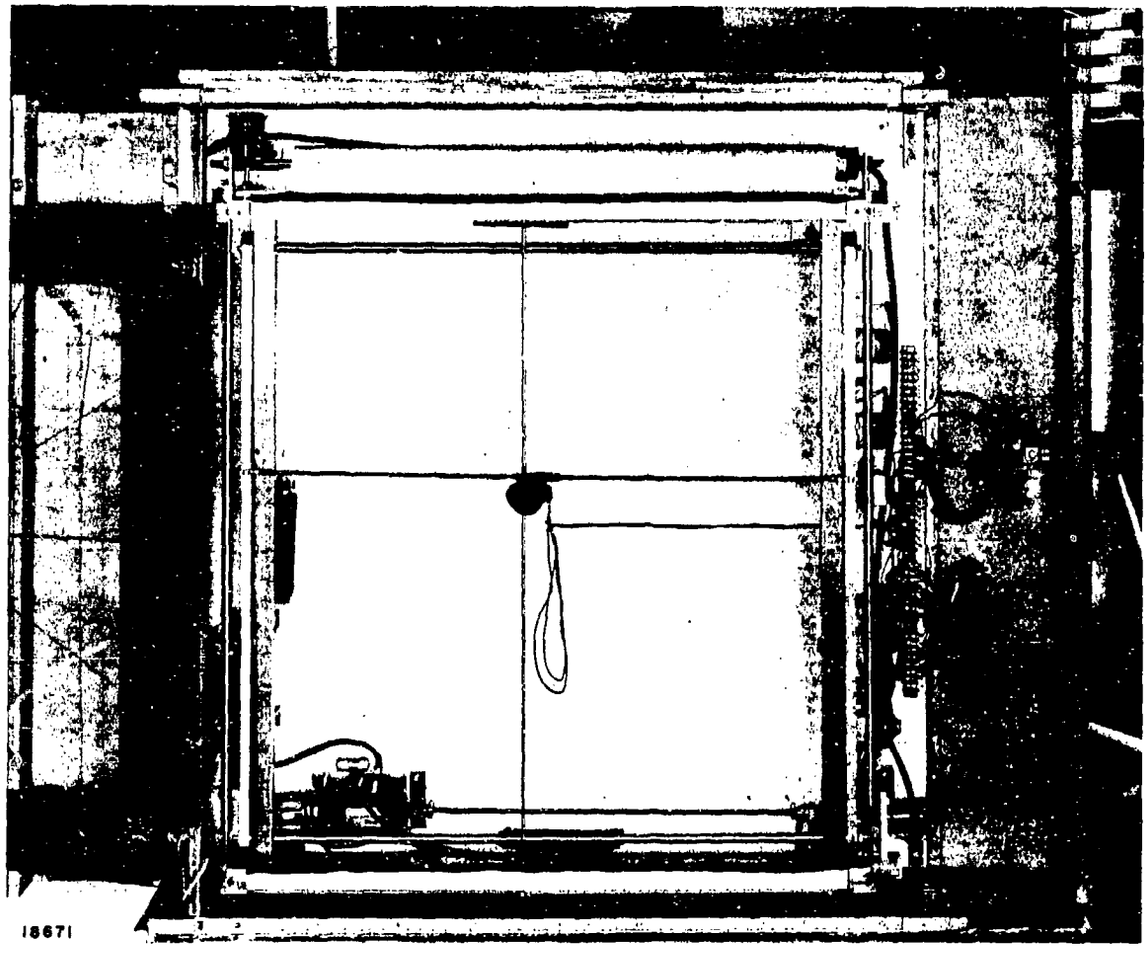

Figure 12 - Summary plotting board open (front view)

The motors used on the board are Diehl, 10-watt, 2-phase, servo motors with integral dc tachometers. The tachometer is placed electrically in the feedback loop in opposition to the driving signal to provide damping for the system.

The over-all gear ratio used in the system between motors and plotting surface is 3 to 1. Broken down, this is 1.5 to 1 between the motor and potentiometer and 2 to 1 between the potentiometer and the plotting board, which provides a 26.5-inch plotting surface with the present gear relationships. This is an arbitrary figure. Tests indicated that the best gear ratio for maximum torque and response of the system was approximately 3 to 1, so that

figure was used. The size of the board in its present form is arbitrary; it can be of any size after minor design modifications for strength, gear ratios, response, and power requirements. This part of the system has been subjected to evaluation tests.[6]

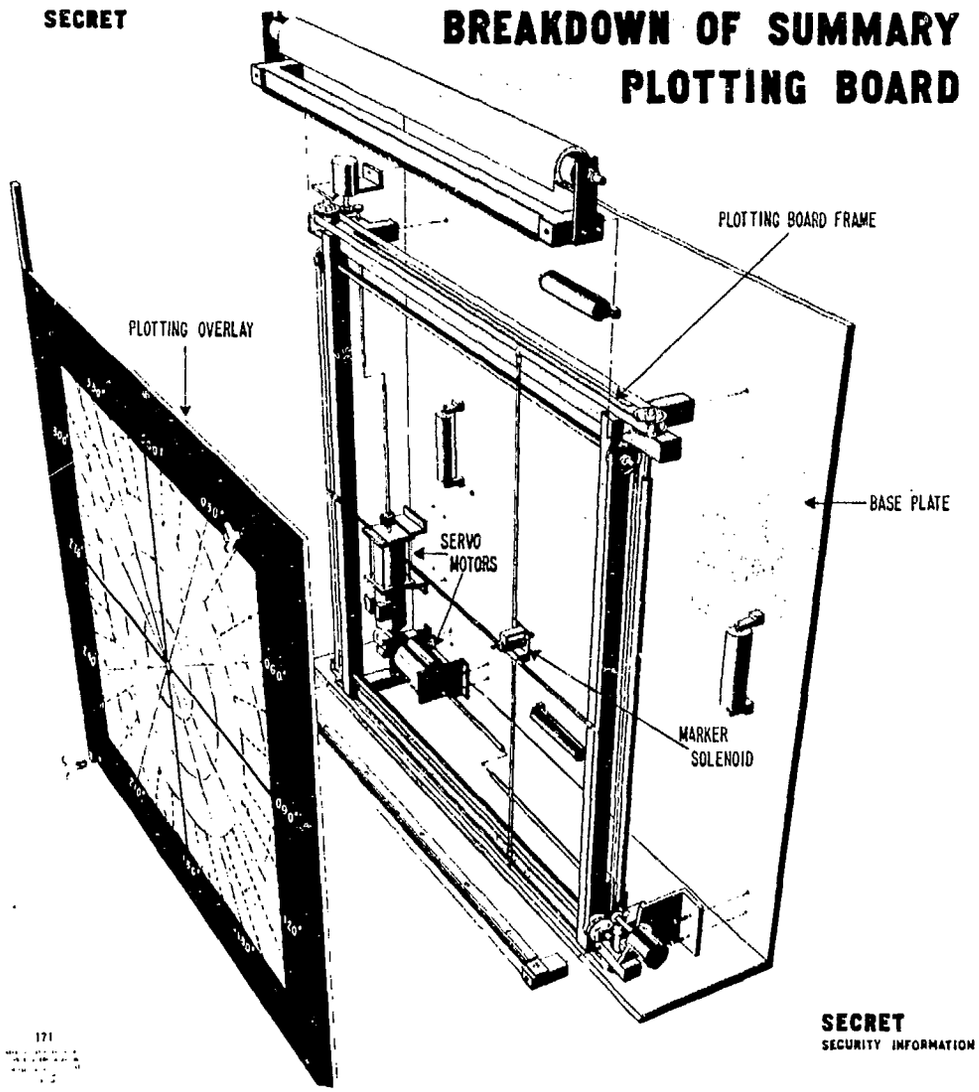

Figure 13 - Breakdown of summary plotting board

That covers briefly the summary-board part of the system. The intercept control part of the system begins at the output of the selector switch. When a channel button is pressed, the information, besides going to the summary board is also channeled to the intercept control system. This part of the system consists of the selector switch, tracking integrators, intercept board, time-sharing mechanism, and the smoothing positions.

6 "Evaluation of NRL Experimental Components for Use in Control and Direction of Aircraft," Fleet, OpDevFor First Partial Report on Project Op/S214/S65, Task Two, 6 September 1951

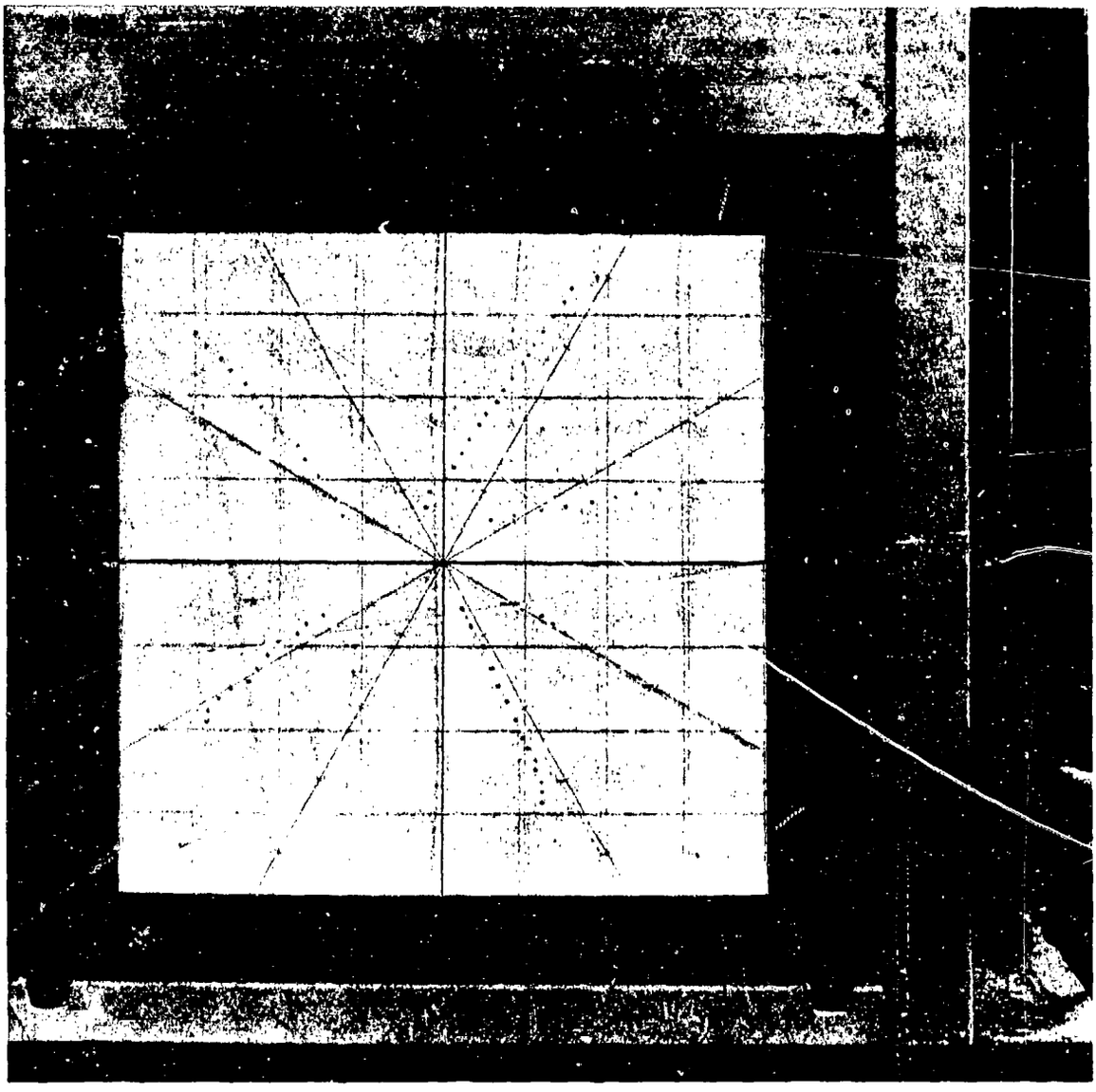

Figure 14 - Summary plotting board closed with target tracks

INTERCEPT PLOTTING BOARDS

The intercept boards and their servo systems are similar to the summary plotting board system. The positioning mechanism of the board is shown in Figure 15. The major difference is in the size of the plotting surfaces and the function of the board. The intercept boards are smaller than the summary plotting board. The function of the intercept board is to present to an intercept officer and a smoothing operator a smoothed track on two targets for the purpose of conducting an interception.

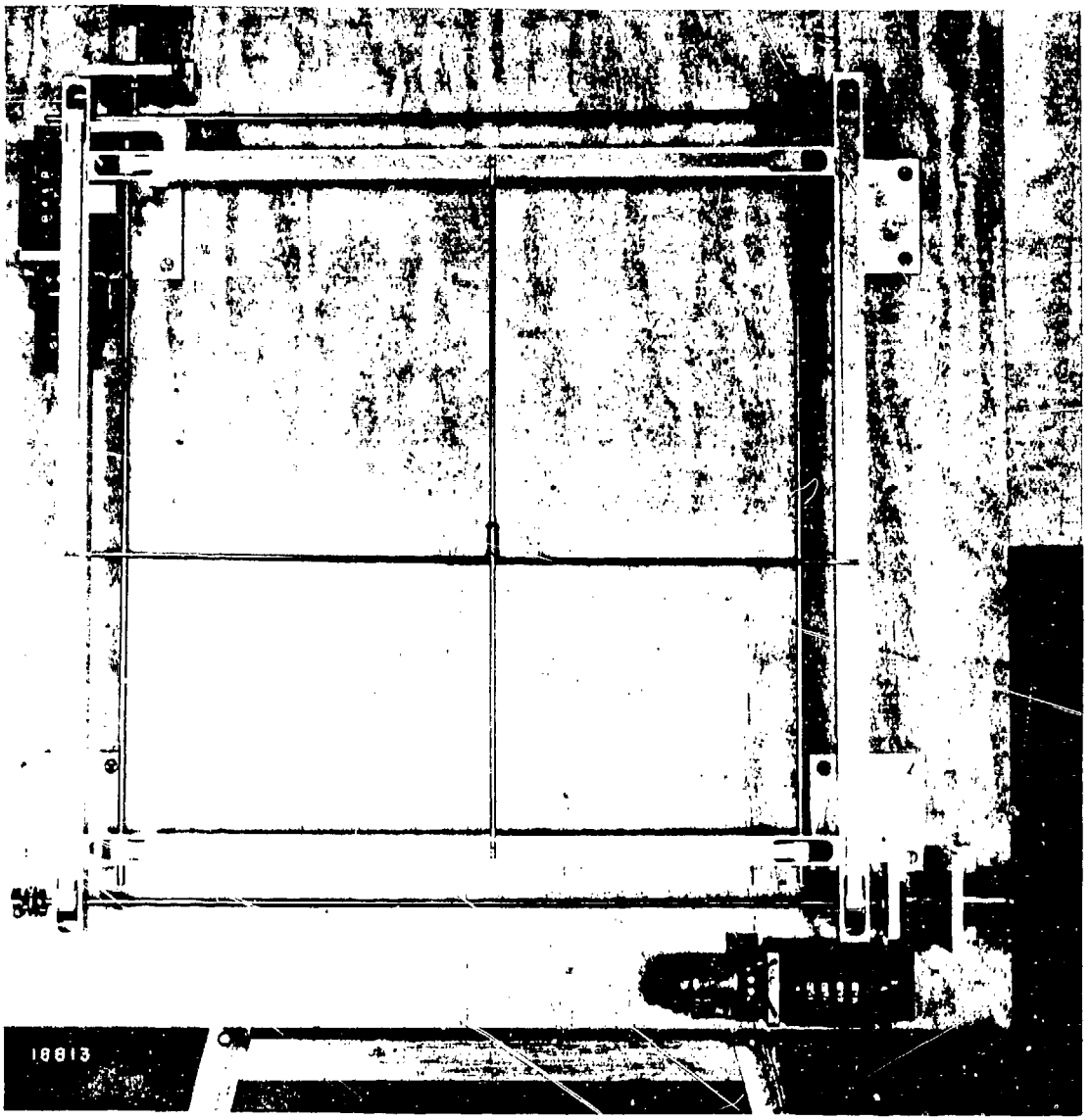

Figure 15 - Intercept plotting board

Tracking Integrators

An experimental model of the tracking integrator is shown in Figure 16 and the Computing Amplifier in Figure 17 with a schematic, for reference purposes, in Figure 18. Only a brief discussion of the tracking integrators will be given here for clarity of the complete system. A more complete treatment of the tracking integrators and smoothing operations will be given in a later NRL report, "A Method of Electronic Smoothing of Target Data," by G. C. Winston.

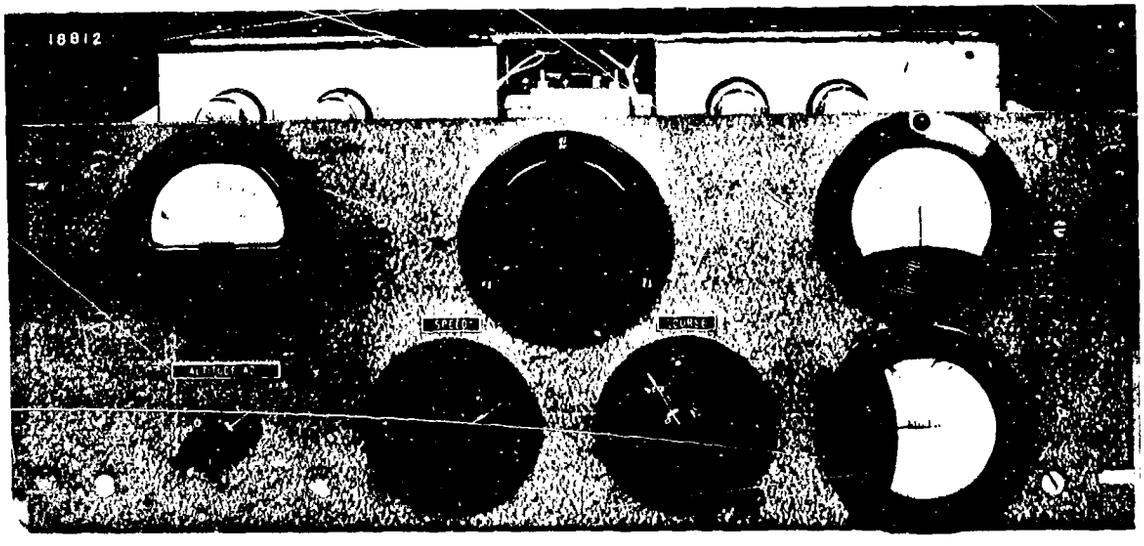

Figure 16 - Experimental tracking integrator

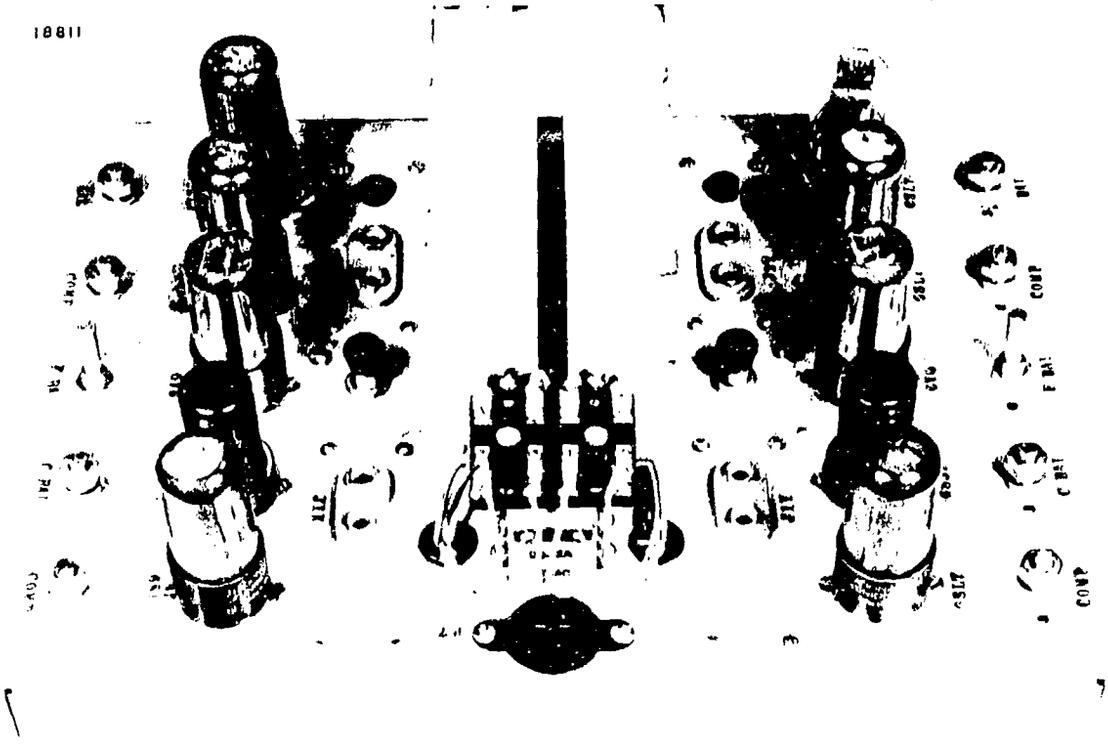

Figure 17 - Computing amplifier

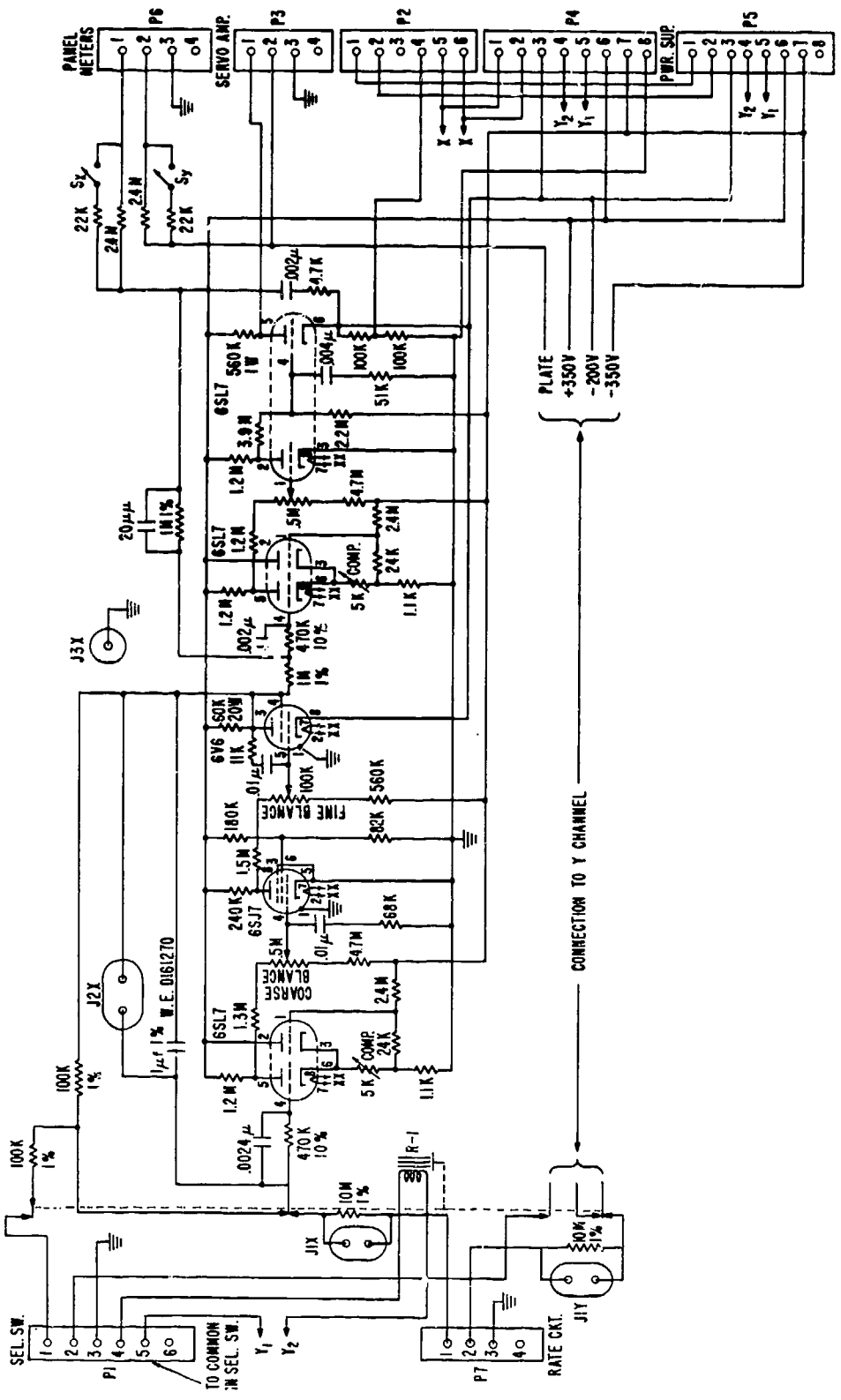

Figure 18 - Computing amplifier schematic

The tracking integrators perform several important functions in the complete intercept control system. First they generate a smoothed continuous track of the target between data points, thus giving position prediction. The tracking integrators have provisions for velocity smoothing which is accomplished by a smoothing operator. A continuous track is registered in the event of fades or blackout of radar information. The tracking integrators also permit the insertion of any offset of own ship on the grid system, thus making all reporting of targets have a true relationship to the grid. The computing amplifiers together with the smoothing controls give a direct reading of target course and speed for local use or for transmission to other ships.

The computing amplifiers used in this system consist of a pair of dc amplifiers for each coordinate of the target. The first dc amplifier is connected as an integrator and the second as a sign-changing amplifier. The integrating amplifier is used to integrate the course and speed of the target between the pick-off points. When the relay on the tracking integrator is energized it places the voltage of the picked-off point across the feedback condenser of the integrator. This puts a set of initial conditions into the amplifier. A step function produced by the smoothing operation is fed into the input of the amplifier. The method by which this function is produced will be discussed in the next section. The step function has a relation to the course and speed of the target. The integrator will integrate the function between pick-off points to give a smoothed track of the target. Each time the selector switch corresponding to a particular integrator is pushed, a new set of initial conditions is placed on the amplifier and the integrator will integrate the step function from that point. Each complete tracking integrator has an integrating amplifier and sign-changing amplifier for the X and Y coordinates of a target.

The sign-changing amplifier performs several functions. It is first of all a sign-changing amplifier to produce a signal of the proper polarity for use on the intercept board. It can also be used as a scaling amplifier to adjust the scale relationship between input and output signals. Another rather important function is that of offset insertion. Any offset of own ship or other ships may be inserted into the system at this point. The output of the tracking integrators is fed to the servo system for the intercept boards through a time-sharing mechanism.

Smoothing Operations

The smoothing operator's panel for one target is shown in Figure 19, and the wiring diagram in Figure 20. Mounted on the panel are a course dial, a speed dial, an altitude dial, and coordinate-indicating meters. The purpose of the panel is to provide the smoothing operator a centralized position to perform his smoothing operations. Electrically, the circuit of the panel is shown in Figure 21. A balanced voltage is placed across a dual potentiometer corresponding to the maximum speed desired in the tracking integrators. The outputs of the sliders on these potentiometers are fed to a sine-cosine potentiometer. This produces an X and Y component of the speed which is fed to the tracking integrators. The speed of the target is set on the speed potentiometer and the course on the sine-cosine potentiometer, and an X and a Y component of the target's velocity is generated. The smoothing operator, by watching the intercept board and comparing the prediced position with the picked-off position, can make corrections in both course and speed on his panel until a true course of the target is obtained. He can then read his course and speed dials to give the true course and speed of the target.

The intercept officer, by watching the intercept board, can compute, from the tracks produced, a course for the interceptor to fly to complete an interception.

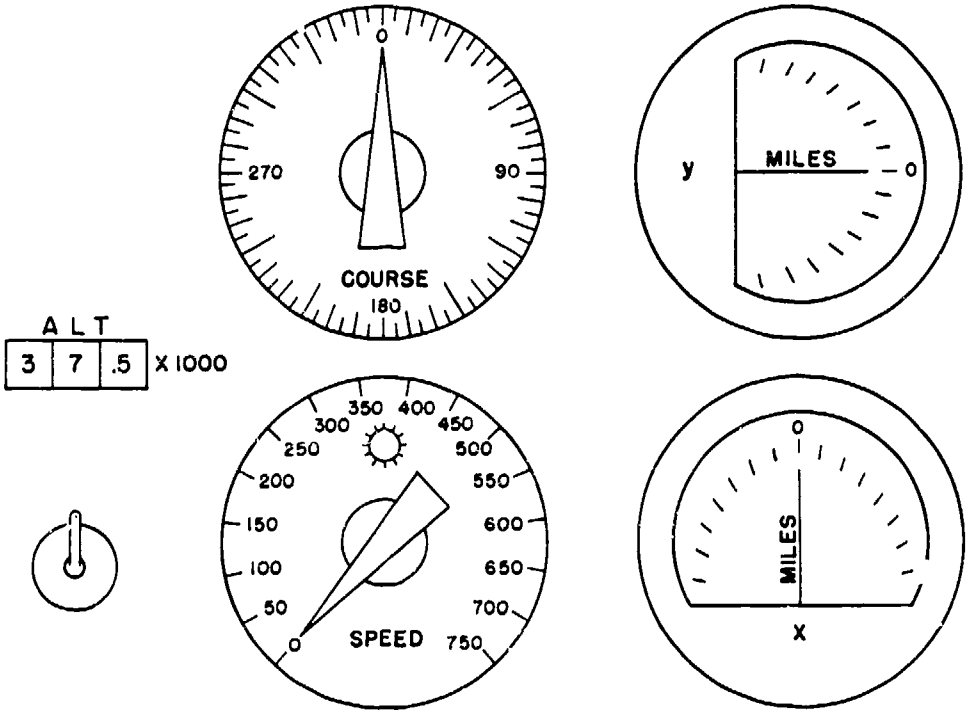

Figure 19 - Smoothing panel

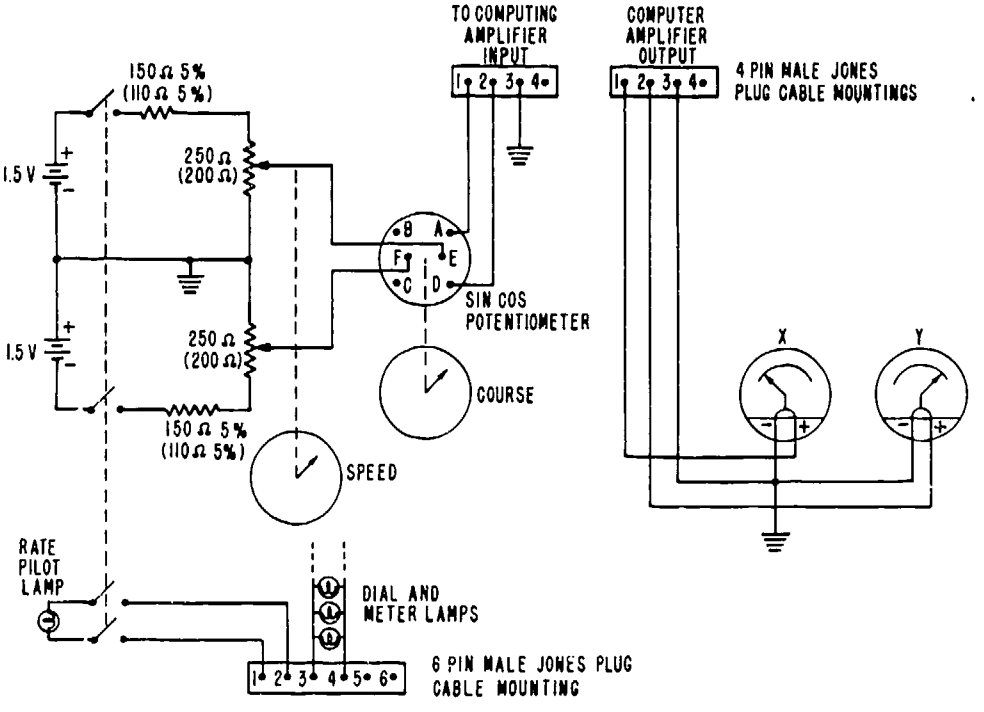

Figure 20 - Tracking integrator block diagram

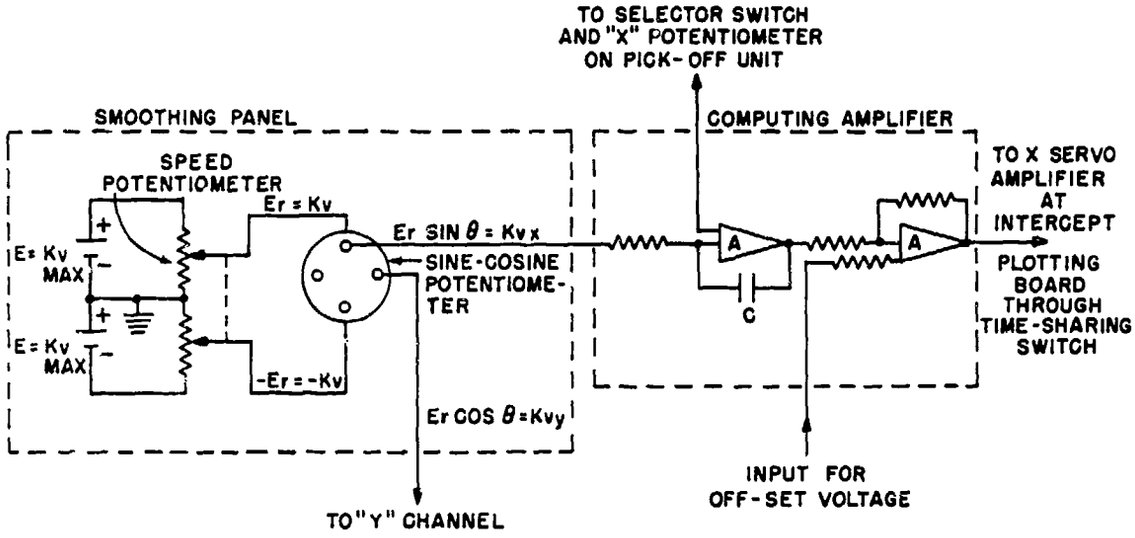

Figure 21 - Smoothing panel schematic

Time Sharing

Since the intercept board has only one carriage, some means must be provided to plot the information on both targets. This is being done by a time-sharing mechanism which programs the duty cycle of the motors on the intercept board between the two tracking integrators corresponding to the two targets. The program for each tracking integrator allows the motor to drive the carriage to the target position, mark, and then switch to the second tracking integrator. This cycle is on a specific time schedule set into the time-sharing mechanism. The schedule is such that substantially continuous tracks are maintained on both targets.

INTERCEPT CONSOLE

A sketch of a proposed type of intercept console is shown in Figure 22. Each of these consoles contain all the necessary equipment for the plotting and smoothing of two target tracks: an intercept plotting board with its servo system, two smoothing panels, two tracking integrators, and all the necessary power supplies. Each console will present to the intercept officer all the information necessary for him to complete an interception. Target tracks will be plotted on the paper behind the board face; and course, speed, and altitude can be read from the dials on the smoothing panel. As shown in the sketch, the plotting board face has grid lines and polar graduations engraved to aid the intercept officer in determining the best flying course for the interceptor.

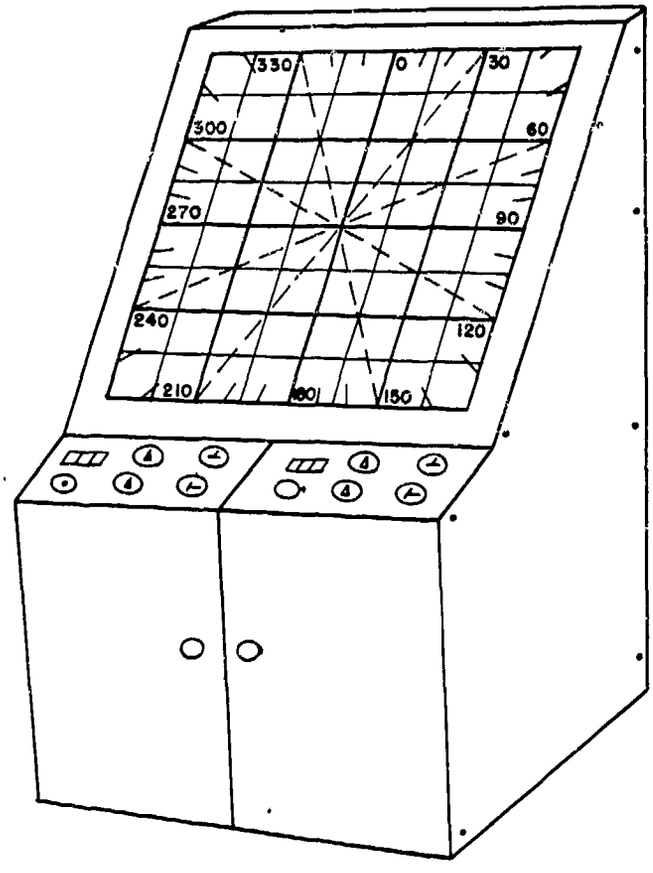

Figure 22 - Intercept console

CONCLUSIONS

The system[7] as discussed in this report conveys one approach to the problem of aircraft interception from detection through the commands to the interceptor. The system is an interim one pending the development of an AAICS. Most of the components are in a very simple form and are readily adaptable to easy maintenance. It is as a whole an electronically aided tracking and interception method, which is readily adaptable to the addition of the parts of the AAICS as they become available, thus fulfilling one of the major requirements of an interim system.

Since all the data are handled in the form of dc potentials, it is readily available for transmission to other ships of a task force. Provision is also made in the system for any off-set on a grid system making the equipment usable for task-force operation by allowing common grid reporting of all targets. The results of experiments and operational tests indicate that the system offers many advantages over the present system of tracking and interception in accuracy, capacity, and correlation to task-force grid. Its use as an interim system will result in increased effectiveness of the Fleet.

* * *

[7] Riccobono, S., "Proposed New CIC Facilities for the CLC-2," NRL Memorandum S-3950-328/51 (Secret), 27 November 1951

NAVY DPPO PRNC WASH D.C.

SECRET
Security Information

Naval Research Laboratory. Report 3959.
A METHOD OF TARGET DATA PICK-OFF AND DISPLAY, by P. L. Wedding. 25 pp. & figs., April 3, 1952.

An interim intercept control system to aid in the rapid dissemination of pertinent radar data for interceptor control, proposed by NRL and now under development, together with other related redevelopments is presented. An over-all examination of the system and its functions, and a breakdown into individual components with their function and operation are included. Th. information is handled in two paths, a summary plotting-board path and an intercept-control path. The processes analyzed include: the pick-off of data, summary plotting,

(Over)
SECRET

1. Radar interception
2. Intercept control systems
3. Radar tracking

I. Wedding, P. L.

SECRET
Security Information

Naval Research Laboratory. Report 3959.
A METHOD OF TARGET DATA PICK-OFF AND DISPLAY, by P. L. Wedding. 25 pp. & figs., April 3, 1952.

An interim intercept control system to aid in the rapid dissemination of pertinent radar data for interceptor control, proposed by NRL and now under development, together with other related redevelopments is presented. An over-all examination of the system and its functions, and a breakdown into individual components with their function and operation are included. The information is handled in two paths, a summary plotting-board path and an intercept-control path. The processes analyzed include: the pick-off of data, summary plotting,

(Over)
SECRET

1. Radar interception
2. Intercept control systems
3. Radar tracking

I. Wedding, P. L.

SECRET
Security Information

Naval Research Laboratory. Report 3959.
A METHOD OF TARGET DATA PICK-OFF AND DISPLAY, by P. L. Wedding. 25 pp. & figs., April 3, 1952.

An interim intercept control system to aid in the rapid dissemination of pertinent radar data for interceptor control, proposed by NRL and now under development, together with other related redevelopments is presented. An over-all examination of the system and its functions, and a breakdown into individual components with their function and operation are included. The information is handled in two paths, a summary plotting-board path and an intercept-control path. The processes analyzed include: the pick-off of data, summary plotting,

(Over)
SECRET

1. Radar interception
2. Intercept control systems
3. Radar tracking

I. Wedding, P. L.

SECRET
Security Information

Naval Research Laboratory. Report 3959.
A METHOD OF TARGET DATA PICK-OFF AND DISPLAY, by P. L. Wedding. 25 pp. & figs., April 3, 1952.

An interim intercept control system to aid in the rapid dissemination of pertinent radar data for interceptor control, proposed by NRL and now under development, together with other related redevelopments is presented. An over-all examination of the system and its functions, and a breakdown into individual components with their function and operation are included. The information is handled in two paths, a summary plotting-board path and an intercept-control path. The processes analyzed include: the pick-off of data, summary plotting,

(Over)
SECRET

1. Radar interception
2. Intercept control systems
3. Radar tracking

I. Wedding, P. L.

SECRET

smoothing operations, servo operation, intercept-control plotting, and power generation. Tracking integrators for prediction and smoothing are presented in a separate NRL report, "An Electronic Method of Smoothing Target Data" by G. C. Winston. A cursory treatment of the functions of the tracking integrators is included here for purposes of continuity and clarity. The system presents a simple method of processing and displaying radar data by means of electrical potentials with a resultant speedup in interceptor control procedures.

SECRET

SECRET

smoothing operations, servo operation, intercept-control plotting, and power generation. Tracking integrators for prediction and smoothing are presented in a separate NRL report, "An Electronic Method of Smoothing Target Data" by G. C. Winston. A cursory treatment of the functions of the tracking integrators is included here for purposes of continuity and clarity. The system presents a simple method of processing and displaying radar data by means of electrical potentials with a resultant speedup in interceptor control procedures.

SECRET

SECRET

smoothing operations, servo operation, intercept-control plotting, and power generation. Tracking integrators for prediction and smoothing are presented in a separate NRL report, "An Electronic Method of Smoothing Target Data" by G. C. Winston. A cursory treatment of the functions of the tracking integrators is included here for purposes of continuity and clarity. The system presents a simple method of processing and displaying radar data by means of electrical potentials with a resultant speedup in interceptor control procedures.

SECRET

SECRET

smoothing operations, servo operation, intercept-control plotting, and power generation. Tracking integrators for prediction and smoothing are presented in a separate NRL report, "An Electronic Method of Smoothing Target Data" by G. C. Winston. A cursory treatment of the functions of the tracking integrators is included here for purposes of continuity and clarity. The system presents a simple method of processing and displaying radar data by means of electrical potentials with a resultant speedup in interceptor control procedures.

SECRET