OCT 25 1946

1148

NATIONAL ADVISORY COMMITTEE FOR AERONAUTICS

TECHNICAL NOTE

No. 1148

FLOW TESTS OF AN NACA-DESIGNED SUPERCHARGER INLET ELBOW AND THE EFFECTS OF VARIOUS COMPONENTS ON THE FLOW CHARACTERISTICS AT THE ELBOW OUTLET

By D. C. Guentert, D. J. Todd, and W. P. Simmons, Jr.

Aircraft Engine Research Laboratory
Cleveland, Ohio

Washington
October 1946

N A C A LIBRARY
LANGLEY MEMORIAL AERONAUTICAL
LABORATORY

NASA Technical Library
3 1176 01425 7746

NATIONAL ADVISORY COMMITTEE FOR AERONAUTICS

TECHNICAL NOTE NO. 1148

FLOW TESTS OF AN NACA-DESIGNED SUPERCHARGER INLET ELBOW AND THE EFFECTS OF VARIOUS COMPONENTS ON THE FLOW CHARACTERISTICS AT THE ELBOW OUTLET

By D. C. Guentert, D. J. Todd, and W. P. Simmons, Jr.

SUMMARY

An investigation was conducted on a supercharger inlet elbow designed by the NACA to have a uniform velocity distribution at the outlet with a minimum pressure loss through the bend. The effects of a vane, installed normal to the plane of the bend, an impeller-shaft housing, and the combination of the two on the outlet-velocity distribution and the total pressure drop through the elbow were determined. In addition, the effect of streamlining the impeller-shaft housing and the effect of carburetor-throttle position on the flow characteristics at the elbow outlet were investigated.

The results showed that the outlet-velocity profile was uniform and the total-pressure-drop factor of the elbow was approximately 0.05 at a Mach number of 0.28 as compared with 0.5 for the best conventional elbow previously tested. The addition of the vane in the elbow without the housing and carburetor improved the outlet-velocity distribution and lowered the total-pressure-drop factor of the elbow from approximately 0.05 to 0.03 at a Mach number of 0.28. The installation of the impeller-shaft housing in the elbow without the vane and carburetor slightly distorted the outlet-velocity profile and caused an increase in the total-pressure-drop factor from approximately 0.05 to 0.08 at a Mach number of 0.28. Streamlining the shaft housing somewhat reduced this flow disturbance. The addition of the vane to the elbow with the streamlined housing and without the carburetor improved the outlet-velocity profile but increased the total-pressure-drop factor of the elbow from approximately 0.08 to 0.1 at a Mach number of 0.28. The distortion caused by the throttle continuously increased as the throttle was closed from the full-open position. The addition of the vane in the carburetor-elbow assembly had a detrimental effect upon the outlet-velocity profile.

INTRODUCTION

As a result of the demand for increasing the power and economy of aircraft engines, an intensive study to improve the over-all supercharger performance and the distribution of the fuel and charge air to the cylinders is being conducted by the NACA Cleveland laboratory. An important phase of this study is concerned with the effect of the supercharger inlet elbow on the over-all performance of the engine. A poorly designed inlet elbow will produce a distorted velocity profile at the impeller inlet and will have a high pressure loss. A distorted velocity profile at the impeller will not only lower the supercharger efficiency but, because the impeller blades and diffuser vanes tend to prevent mixing and a resultant equalization of flow, the distorted velocity profile may result in poor distribution of the fuel and charge air among the cylinders of radial aircraft engines. The pressure loss through the elbow is important in considering engine power because it will, in effect, lower the manifold pressure by an amount equal to the product of the inlet-elbow pressure loss and the supercharger pressure ratio.

In an effort to obtain an inlet elbow with a uniform velocity distribution at the outlet and with a minimum pressure loss through the bend, a set of design principles was assembled by the Compressor and Turbine Research Division. By the use of these principles, a supercharger inlet elbow was designed within the limitations on the shape of the inlet and outlet, the size, and the axial length imposed on an elbow for a conventional radial aircraft engine. Provisions were made for a streamlined impeller-shaft housing and a removable vane that followed the center line of the passage and was perpendicular to the plane of the bend.

Flow tests were conducted on this elbow to determine the effectiveness of the design principles in producing an elbow with good flow distribution at the outlet and a low pressure loss. Tests were also made to determine the effect of carburetor throttle setting on the outlet velocity distribution. A final series of surveys was made to determine the effect of streamlining the housing on the velocity profile at the elbow outlet.

NACA-DESIGNED SUPERCHARGER INLET ELBOW

Principles of NACA Design

A static-pressure gradient across the flow path is necessary to provide the force normal to the air stream required to turn the flow around a bend. This pressure gradient does not equalize for an appreciable distance downstream of the elbow because the turning

of the air stream is not completed at the elbow outlet. A distorted velocity distribution will therefore exist at the elbow outlet with high velocity flow at the inside of the bend and low velocity flow at the outside. In order to minimize the pressure gradient with its resultant velocity distortion, a large radius of curvature of the flow path is desirable. Installation limits on axial length, however, severely restrict the permissible radius.

Another effect of the formation of the pressure gradient across the flow path is the formation of adverse pressure gradients along the flow path. In order to form the pressure gradient across the flow path that is required to turn the flow, the static pressure along the outside surface of the bend, in an elbow of constant cross section, must increase from the initial value upstream of the bend to a maximum at the point where the curvature of the air stream is greatest and then decrease to the downstream value. Conversely, the static pressure along the inside surface must first decrease from the upstream value to a minimum at the point where the curvature of the air stream is greatest and then increase to the downstream value. Thus, it can be seen that pressure gradients in opposition to the flow are set up in two regions along the elbow boundaries. If these adverse pressure gradients are sufficient to overcome the momentum of the air stream in the boundary layer, flow separation and possible backflow will result with their consequent losses and detrimental effect on the outlet velocity profile. It is possible, by using a passage of high aspect ratio (ratio of width to thickness), to reduce these pressure gradients because the decreased distance between the inside and outside walls results in a smaller pressure differential across the flow passage. In addition, in a high-aspect-ratio elbow the secondary flow losses are reduced by the natural restriction of this flow to the relatively small regions along the sides of the passage (reference 1, pp. 84-87). In supercharger inlet elbows a high aspect ratio is generally possible at the elbow inlet because of the shape of the carburetor flange. As the shape of the elbow outlet is determined by the geometry of the supercharger, the use of a high aspect ratio through the entire bend is prohibited. Therefore, in order to take advantage of the benefits that can be derived from the use of a high-aspect-ratio passage, it is desirable that a maximum part of the bending take place near the carburetor outlet.

The adverse pressure gradient along the outside surface of the bend near the inlet is not critical because the increased radius of curvature and increased path length result in a reduced velocity gradient along the outside surface. The action of secondary flow is of benefit in preventing the thickening of the boundary layer at the outside surface. The adverse pressure gradient existing at the inside surface near the outlet of the bend, however, is very critical

because of the action of the secondary flow in thickening the boundary layer in this region. A sufficient reduction in flow area from the inlet to the outlet of the elbow makes it possible, by properly proportioning the area change through the elbow, to decrease the average static pressure enough to compensate for this increase in pressure occurring along the inside surface of the bend.

Provisions were made for several modifications of the elbow which would enable it to be used for either an in-line or a conventional radial aircraft engine. These modifications consisted of a vane and two designs of impeller drive-shaft housings.

Application of the NACA-Design Principles

A fairly large area reduction was available through the elbow, which had an inlet with an aspect ratio of approximately 3.2 and an area of 0.377 square foot and a round outlet with an area of 0.235 square foot. A perspective cutaway illustration showing the carburetor-elbow assembly with the vane and streamlined housing installed is presented in figure 1.

The profile of the inside wall of the bend, being the most critical, was the first element of the elbow design to be laid out. This surface was so shaped that the radius of curvature rapidly decreased from the straight section at the inlet and then gradually increased to the straight section at the outlet. Thus, most of the bending took place in the high-aspect-ratio region near the inlet and no sharp change in curvature occurred in the critical region near the outlet of the bend. The profile of the outside wall was obtained by fairing a smooth curve between the inlet and outlet of the elbow. The area variation between the elbow inlet and outlet of sections normal to the center line of the bend was assumed. From the assumed area variation and a plot of the potential flow streamlines through the passage (reference 1, p. 22), the velocity and the static-pressure gradients along the inside and outside surfaces were obtained. On the basis of this information, the area variation through the passage was modified in order to eliminate the regions along the inside of the bend where a velocity decrease or a pressure increase occurred, while insuring that no sharp change in curvature occurred in the plane normal to the plane of the bend. It was found that all of the regions where a velocity decrease occurred could be eliminated from the critical inside surface except for a short distance at the outlet where the rate of change of area must be zero to avoid any critical change of section at the impeller inlet. Details of the final elbow passage are shown in figure 2. The areas given in the table are for the elbow passage without the vane or housing installed.

The external dimensions of the elbow are such that it may be used in either an in-line or a radial engine. In a conventional radial aircraft engine, the impeller-shaft housing extends across the passage to the face of the impeller; therefore a streamlined housing (fig. 1) was made for the elbow to simulate this condition. A round housing was also made to determine the effect of the streamlining on the velocity profile at the elbow outlet. A sharp change in section at the end of this housing, which would not exist in an actual engine installation, was eliminated by continuing the housing to a point approximately 14 inches downstream of the elbow outlet.

The effect of a single splitter-type vane on the flow through the elbow was determined by installing a vane (fig. 1) that followed the center line of the passage perpendicular to the plane of the bend. This vane extends from $1\frac{1}{2}$ inches upstream of the initial point of bending to the elbow outlet and was so designed that it could be removed without altering the interior surface of the elbow.

TEST APPARATUS

A schematic diagram of the duct-component test rig used for the flow investigations of the elbow and the carburetor-elbow assembly is shown in figure 3. The air was supplied to the test section of the rig through a $12\frac{1}{8}$-inch inside-diameter duct and transition section. A straight section of duct was placed between the transition section and the unit being tested to allow any velocity distortions produced by the transition section to be dissipated before entering the test unit. The air was exhausted to the atmosphere through a straight duct of the same cross section and area as the outlet of the elbow.

Air was supplied at 40 inches of water above atmospheric pressure. The weight flow of air was controlled by a butterfly valve located approximately 40 diameters upstream of the test section and was measured with a calibrated pitot-static tube at the reference station immediately upstream of the test section. The method of calibrating the pitot-static tube and a complete description of the instrumentation are given in reference 2.

Velocity surveys were taken, one at a time, at the three survey stations shown in figure 3. Surveys A, B, and C at station 2 were made to determine the velocity profile of the flow entering the unit being tested. Surveys A, B, C, and D were taken at the elbow outlet (station 3) and 6 inches downstream of the elbow outlet (station 4).

At these two stations surveys A and D were 2 inches from the elbow center line and surveys B and C were 1/2-inch from the center line in planes parallel to the plane of the bend. The survey tube in surveys B and C were accommodated by cutting slots in the housing extending downstream of the plane of survey.

TESTS AND CALCULATIONS

A complete series of tests at a constant mass flow of air was conducted on the elbow alone, on the elbow with the vane, on the elbow with the housing, and on the elbow with both the vane and housing. Two series of tests were also run to determine the effect of carburetor throttle setting on the outlet velocity profile. In the first series, the housing alone was installed in the elbow and in the second series both the housing and the vane were used. A final series of four surveys was taken at the full-open carburetor throttle position with a round housing in place of the streamlined one and without the vane to determine the effect of streamlining the housing on the velocity distribution at the elbow outlet. Velocity surveys for the elbow without the carburetor were taken at stations 2, 3, and 4 (fig. 3). Other surveys were taken to determine the effect of volume flow on the total pressure drop through the elbow.

The tests to determine the effect of the carburetor throttle position on the velocity profile were run with the static pressure at station 1 maintained at 30 inches of water above atmospheric pressure. The surveys at station 3 were taken with the carburetor throttles set at full open and at 15°, 30°, 45°, and 55° closed. No surveys were taken for any throttle angles beyond 55° closed because the flow became so small that reliable data could not be obtained.

The benefits in the flow distribution at the elbow outlet produced by streamlining the shaft housing were measured by replacing the streamlined housing with the round one and determining the resulting velocity profile. Four surveys at station 3 were taken with the carburetor throttle full open and with the static pressure at station 1 maintained at 30 inches of water above atmospheric pressure.

The results of the velocity-distribution surveys are presented as nondimensional plots of V/V_{av} against l/L where V/V_{av} is the ratio of the velocity at a given point to the average velocity computed from the weight flow, the area, and the average density ρ_{av}

at the survey station and l/L is the ratio of the distance of that point from the inside wall of the duct to the total length of the traverse of that survey.

The pressure-drop data for the elbow without the carburetor are presented as a nondimensional ratio of the total pressure drop between stations 2 and 4 to the average dynamic pressure at station 4. A definite static pressure and velocity gradient existed at station 3 and the pressure loss due to the equalization of these gradients should be charged to the elbow. As this static-pressure gradient was very nearly equalized ahead of station 4 and as the pressure loss due to wall friction was considered negligible in the 6 inches between stations 3 and 4, the total pressure loss through the elbow was taken as the total pressure drop between stations 2 and 4. The total pressure at each station was determined from the sum of the static pressure and the average dynamic pressure q_{av} where

$$q_{av} = \frac{1}{2} \rho_{av} (V_{av})^2$$

The velocities encountered during the tests were low enough to assume incompressible flow. The difference between the total pressures at stations 2 and 4 (ΔP_{T2-4}) divided by the average dynamic pressure at station 4 (q_4) resulted in the total pressure-drop factor $\Delta P_{T2-4}/q_4$ for the elbow.

EFFECT OF VANE AND STREAMLINED IMPELLER-SHAFT HOUSING ON FLOW THROUGH NACA ELBOW WITHOUT CARBURETOR

The velocity profile obtained at station 2 is shown in figure 4 and is representative of the flow entering the elbow for all the tests without the carburetor. The flow was uniform and had a typical turbulent-velocity profile.

Elbow alone. - Surveys A, B, C, and D taken at station 3 are presented in figure 5(a) and show that a fairly uniform velocity profile with no separation exists at this station. The higher values of V/V_{av} in the velocity profile obtained near the inside of the bend are due to the pressure gradient built up in turning the air stream. The velocity profile at station 4 is presented in figure 5(b). Although a small velocity distortion exists along the inside wall of the bend due to the adverse pressure gradient existing along the wall, the velocity profile is very flat and regular and no separation was observed.

Elbow with vane. - The surveys at station 3 (fig. 6(a)) show that, with the exception of the wake behind the vane, a very uniform velocity profile with no separation exists at this station. The effect of the vane was to divide the elbow into two passages, each of high aspect ratio and each turning approximately one-half the air stream. The characteristic peak in the velocity profile near the inside of the bend was present in both halves of the elbow. The maximum spread between the high-velocity point at the inside of the bend and the low-velocity point at the outside of the bend was reduced from approximately 29 percent for the elbow alone to approximately 19 percent for the elbow with the vane. At station 4 most of the wake of the vane has been dissipated and, except for a slight distortion at the inside of the bend at surveys B and C, a very uniform velocity distribution was obtained (fig. 6(b)).

Elbow with streamlined impeller-shaft housing. - The effect of the housing on the velocity profile at station 3 is shown by surveys A, B, C, and D (fig. 7(a)). Surveys A and D are similar to those obtained with the elbow alone (fig. 5(a)) except that the velocities are slightly higher at the inside of the bend and slightly lower at the outside. The relative velocity of the flow between the housing and the outside wall of the bend at surveys B and C rapidly drops off and is lower than that obtained from the elbow without the housing. At station 4, the velocity distortions found at station 3 have been nearly eliminated (fig. 7(b)). Considerable distortion, however, occurs in the flow between the inside wall and the housing.

Elbow with vane and streamlined impeller-shaft housing. - The velocity profile at station 3 with the vane and housing installed is shown in figure 8(a). Surveys A and D are similar to those obtained with the elbow and vane (fig. 6(a)) except that survey D is slightly higher. In addition, the wake caused by the vane has been greatly reduced. This reduction is due to the decreased boundary-layer thickness of the higher velocity air caused by the presence of the housing in the passage. The velocity profile is fairly flat across the duct 6 inches downstream of the elbow outlet at surveys A and D and between the housing and outside wall at surveys B and C (fig. 8(b)). Between the housing and the inside of the bend, however, there is a large distortion similar to that obtained in the test of the elbow with the housing alone (fig. 7(b)).

Outlet velocity distribution of conventional elbow used to determine limiting dimensions of NACA supercharger inlet elbow. - As a basis for comparison, the outlet-velocity profile obtained from the conventional elbow, the limiting dimensions of which were taken as a basis for the design of the NACA elbow, is presented in figure 9. The profile is very distorted, with a large wake behind each

of the three vanes and considerable distortion between the impeller-shaft housing and both the inside and outside walls.

Total-pressure-drop factor. - In figure 10 the variation in total-pressure-drop factor of the air stream $\Delta P_{T2-4}/q_4$ with volume flow, expressed in terms of Mach number at station 4 M_4, is presented for the four conditions at which the NACA elbow was tested without a carburetor. For comparison, the pressure-drop factor for the conventional elbow having the lowest pressure loss of several conventional elbows which had been previously tested is also given in figure 10. The pressure-drop factor of this elbow is approximately 5 times greater than that of the NACA elbow. Insufficient data were available to obtain a curve of the pressure-drop factor for the conventional elbow, the dimensions of which were used to determine the limitations on the shape of inlet and outlet, the size, and the axial length of the NACA elbow. The limited data available, however, indicated that the pressure-drop curve for this elbow would be considerably higher than the curve for the best conventional elbow previously tested.

The lowest total pressure drop was obtained with the vane and without the housing mounted in the elbow. Although the skin friction increased due to the addition of the vane in the elbow, the improvement in the velocity profile with the consequent decrease in mixing losses is great enough to result in a lower pressure drop through the elbow when the vane is used. The addition of the housing causes a considerable decrease in the area at the elbow outlet with resultant higher velocities and a higher total pressure loss. In addition, the presence of the housing greatly increases the turbulence and mixing losses through the elbow. The highest total-pressure-drop factor was obtained with both the vane and the housing in the elbow. In this case, the vane forces a greater amount of the air stream around the base of the housing. The consequent increase in the turbulence and mixing losses therefore results in a greater pressure drop than is encountered with the housing alone.

EFFECT OF CARBURETOR-THROTTLE POSITION ON FLOW CHARACTERISTICS AT ELBOW OUTLET

During the investigation to determine the effect of the carburetor-throttle position on the flow through the bend, the NACA elbow was tested with the streamlined housing and with both the streamlined housing and the vane. The velocity profile obtained at the entrance to the carburetor at full-open throttle is shown in figure 11. The flow entering the carburetor-elbow assembly was fairly uniform except that the velocity was slightly greater at the outside of the bend than at the inside.

Elbow with streamlined impeller-shaft housing. - At full-open throttle, the velocity distribution at the outlet of the carburetor-elbow assembly with the housing installed was uniform, although the velocity ratio V/V_{av} at the inside of the bend was slightly higher than at the outside (fig. 12). Comparison of figure 12 with figure 7(a) shows that the outlet profile obtained at full-open throttle was very similar to that obtained with no carburetor. The principal effect of closing the throttle from full open to the 30° position was to increase the velocity ratio at the inside of the bend and to decrease the velocity ratio at the outside. The increase in the velocity ratio near the inside of the bend as the throttle was closed was entirely due to the effect of the carburetor throttle on the flow. As the throttle closes, the trailing edge moves toward the inside of the bend and produces a convergent passage, causing a high velocity jet along the inside of the bend. Conversely, the flow along the outside surface passes through a divergent section beneath the throttle, with a consequent decrease in velocity. Thus, the net effect of closing the throttle is to increase the relative velocity at the inside of the bend and decrease it at the outside. As the throttle is closed beyond the 30° position, the velocity profile at the inside of the bend becomes very distorted. In addition, the average velocity ratio near the inside of the bend decreases and at the outside of the bend it increases. This reversal in trend is similar to that found in the flow tests of the supercharger inlet elbow reported in reference 2. It is apparent from these tests and the tests reported in reference 2 that the use of a carburetor with single butterfly-type throttles immediately upstream of an elbow will have a detrimental effect on the velocity profile at the elbow outlet.

Elbow with streamlined impeller-shaft housing and vane. - In the tests to determine the effect of the carburetor throttle setting on the velocity profile at the outlet of the elbow with the vane and housing (fig. 13), the relative velocity near the inside of the bend increased as the throttle was moved from the full-open to the 30° position. Closing the throttle further produced the same reversal of trend that was found in the tests of the elbow with the housing alone (fig. 12). At the higher throttle angles, the velocity profile at the inside of the bend became very distorted and the average velocity decreased, whereas at the outside of the bend the average velocity increased.

The velocity distortion at the outlet of the elbow with the housing is much less for all throttle angles tested (except full open) than at the outlet of the elbow with both the housing and the vane. The vane not only produces a wake at the impeller inlet but also tends to retain through the elbow any velocity distortion created by the carburetor throttle. Thus, it is apparent that the

vane has a detrimental effect if a carburetor with single butterfly-type throttles is located directly upstream of the elbow.

A comparison of the effect of round and streamlined impeller-shaft housing. - The velocity profile at the outlet of the elbow without the vane and with the round impeller-shaft housing installed in place of the streamlined housing is presented in figure 14(a). From these curves it can be seen that a region of low-velocity flow exists immediately behind the housing. A comparison of these curves with those obtained with the streamlined housing installed (fig. 14(b)) shows that streamlining the housing eliminates this region of low-velocity flow and produces a more uniform profile at the impeller inlet.

SUMMARY OF RESULTS

The results of flow tests to determine the effect of a vane and two different shapes of impeller-shaft housings on the outlet-velocity distribution and the total pressure drop of an NACA-designed supercharger inlet elbow, and the effect of the carburetor on the outlet-velocity profile of the elbow were as follows:

1. A fairly uniform velocity profile existed at the outlet of the NACA elbow without the vane, the housing, or the carburetor; the pressure-drop factor for the elbow was approximately 0.05 at a Mach number of 0.28, as compared with 0.5 for the best of several conventional elbows previously tested.

2. The addition of the vane to the elbow without the housing and the carburetor improved the outlet-velocity distribution and lowered the total-pressure-drop factor of the elbow from approximately 0.05 to 0.03 at a Mach number of 0.28.

3. The addition of a streamlined impeller-shaft housing to the elbow without the vane and the carburetor slightly distorted the outlet-velocity profile and caused a small increase in the total-pressure-drop factor of the elbow from approximately 0.05 to 0.08 at a Mach number of 0.28.

4. The addition of the vane to the elbow with the housing and without the carburetor improved the outlet-velocity distribution but increased the total-pressure-drop factor of the elbow from approximately 0.08 to 0.1 at a Mach number of 0.28.

5. The distortion of the velocity profile at the outlet of the elbow continuously increased as the carburetor throttle was closed from the full-open position.

6. The addition of the vane to the carburetor-elbow assembly resulted in a more distorted outlet-velocity profile because the vane tended to retain through the elbow the distorted flow at the carburetor outlet.

7. Streamlining the impeller-drive-shaft housing eliminated the region of low velocity flow found between the round housing and the outside wall.

CONCLUSION

If a relatively uniform flow exists at the inlet, a supercharger inlet elbow having a very low pressure loss and a relatively uniform outlet-velocity profile can be designed by applying the NACA design principles and by taking advantage of the relatively high aspect ratio at the inlet and the area decrease through the elbow, which are available in most conventional installations.

Aircraft Engine Research Laboratory,
National Advisory Committee for Aeronautics,
Cleveland, Ohio, April 5, 1946.

REFERENCES

1. Goldstein, S.: Modern Developments in Fluid Dynamics. Vol. 1. The Clarendon Press (Oxford), 1938.

2. Moses, Jason J.: Effect of Various Carburetor Throttle Settings on the Flow Characteristics at the Outlet of a Supercharger Inlet Elbow. NACA ARR No. E5E19a, 1945.

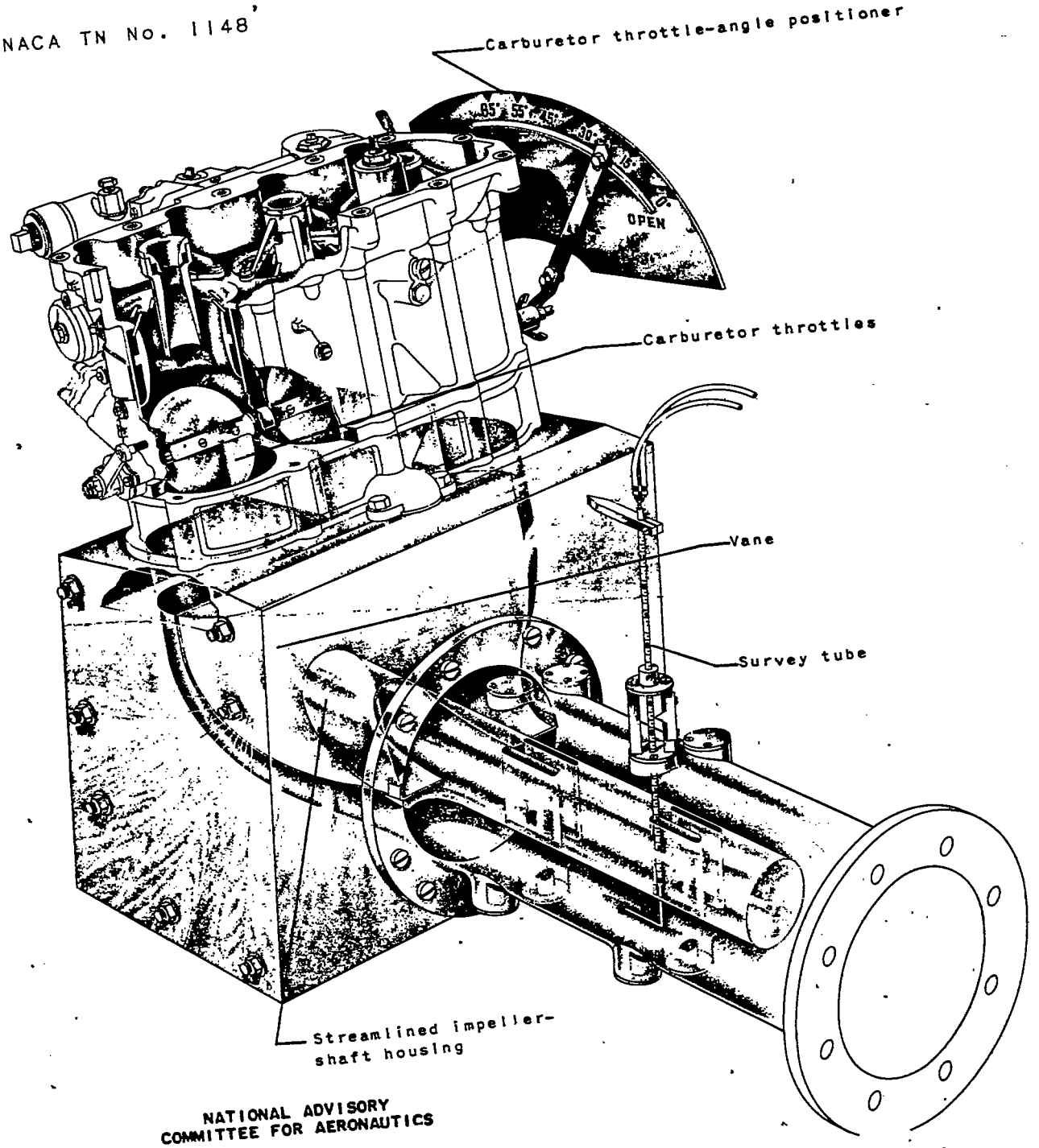

NATIONAL ADVISORY
COMMITTEE FOR AERONAUTICS

Figure 1. - Perspective cutaway illustration of air-flow passage through carburetor-elbow assembly with vane and streamlined housing installed.

2419+571

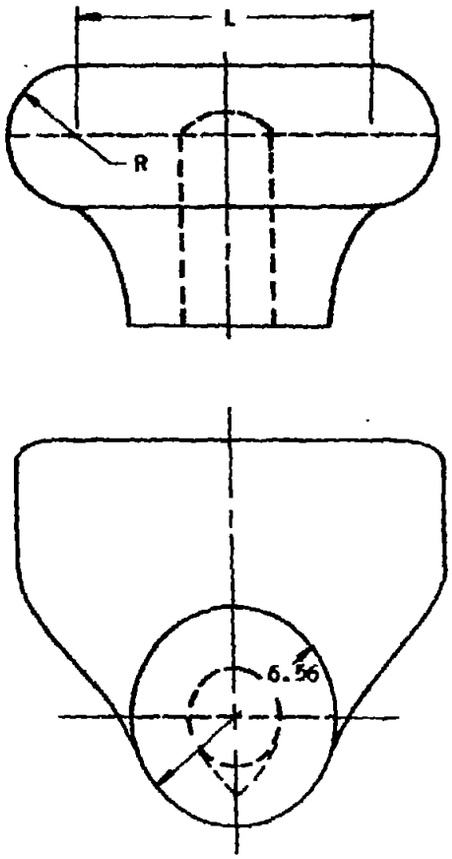

Section	Angle	A (in.)	W (in.)	B (in.)	L (in.)	R (in.)	Area (sq ft)
0	10°	2.48	4.25	4.60	9.43	2.12	0.377
1	17°40'	2.47	4.32	4.61	9.06	2.16	.375
2	25°30'	2.43	4.55	4.66	8.27	2.27	.370
3	33°10'	2.37	4.93	4.75	7.04	2.46	.358
4	40°30'	2.30	5.32	4.85	5.71	2.66	.344
5	47°40'	2.21	5.70	4.98	4.42	2.85	.326
6	54°55'	2.13	6.01	5.10	3.28	3.00	.307
7	62°0'	2.06	6.26	5.18	2.33	3.13	.287
8	69°0'	2.00	6.43	5.24	1.57	3.21	.269
9	75°50'	1.96	6.51	5.25	0.90	3.25	.254
10	82°55'	1.94	6.54	5.23	0.38	3.27	.242
11	90°	1.93	6.56	5.21	0.03	3.28	.235

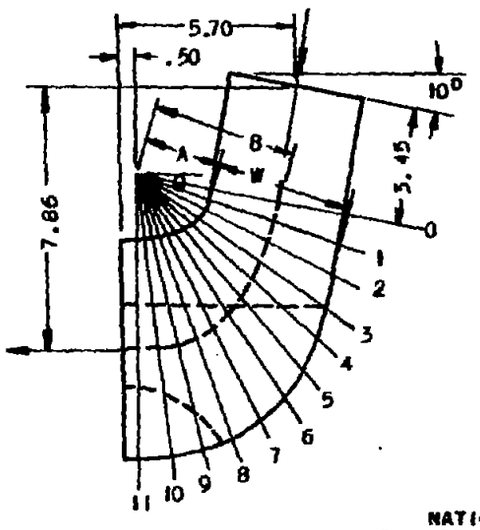

NATIONAL ADVISORY
COMMITTEE FOR AERONAUTICS

Figure 2. - Mechanical drawing of supercharger inlet elbow designed by NACA. All dimensions in inches.

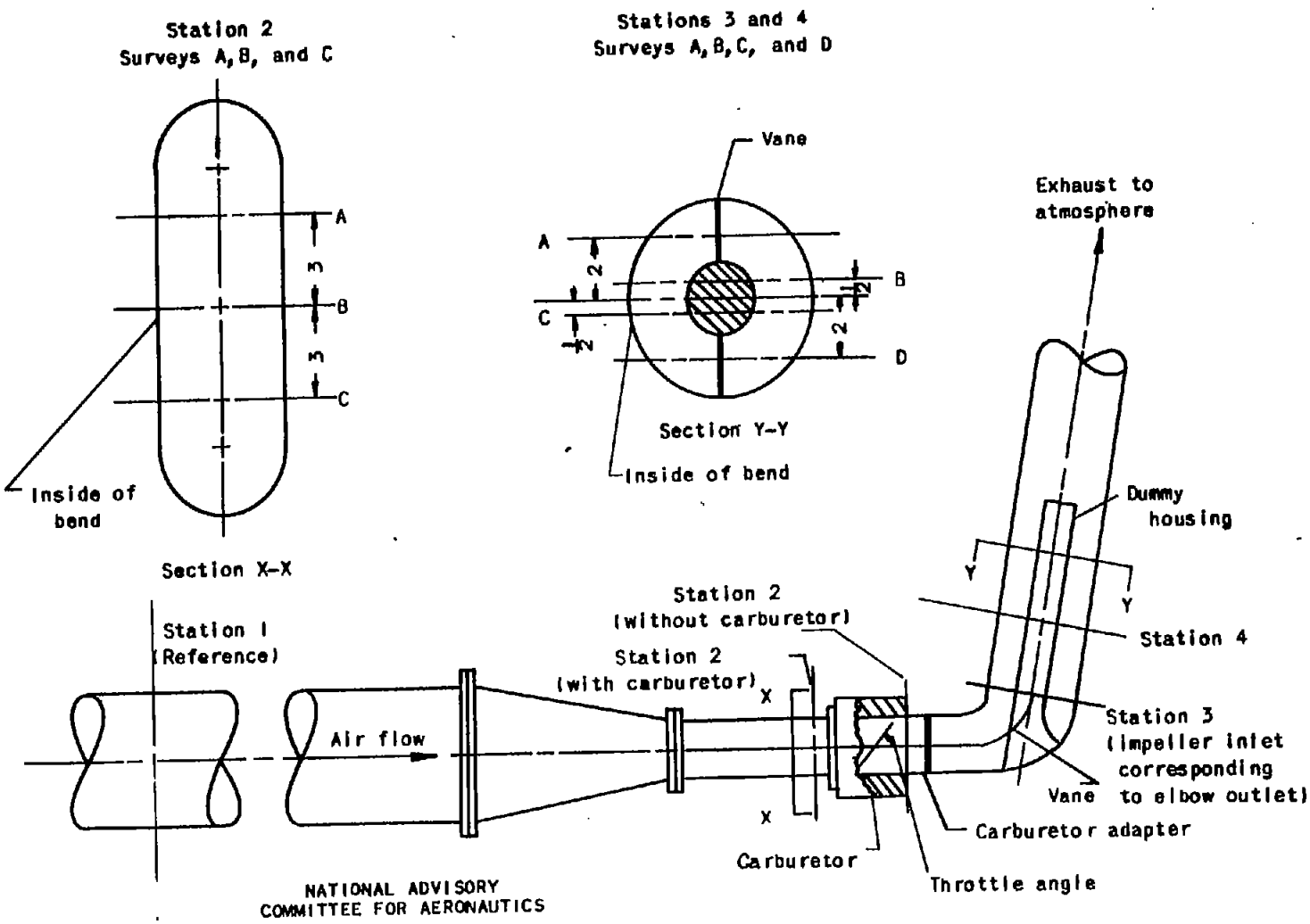

Figure 3 - Schematic diagram of carburetor and inlet elbow installed in duct-component test rig. All dimensions in inches.

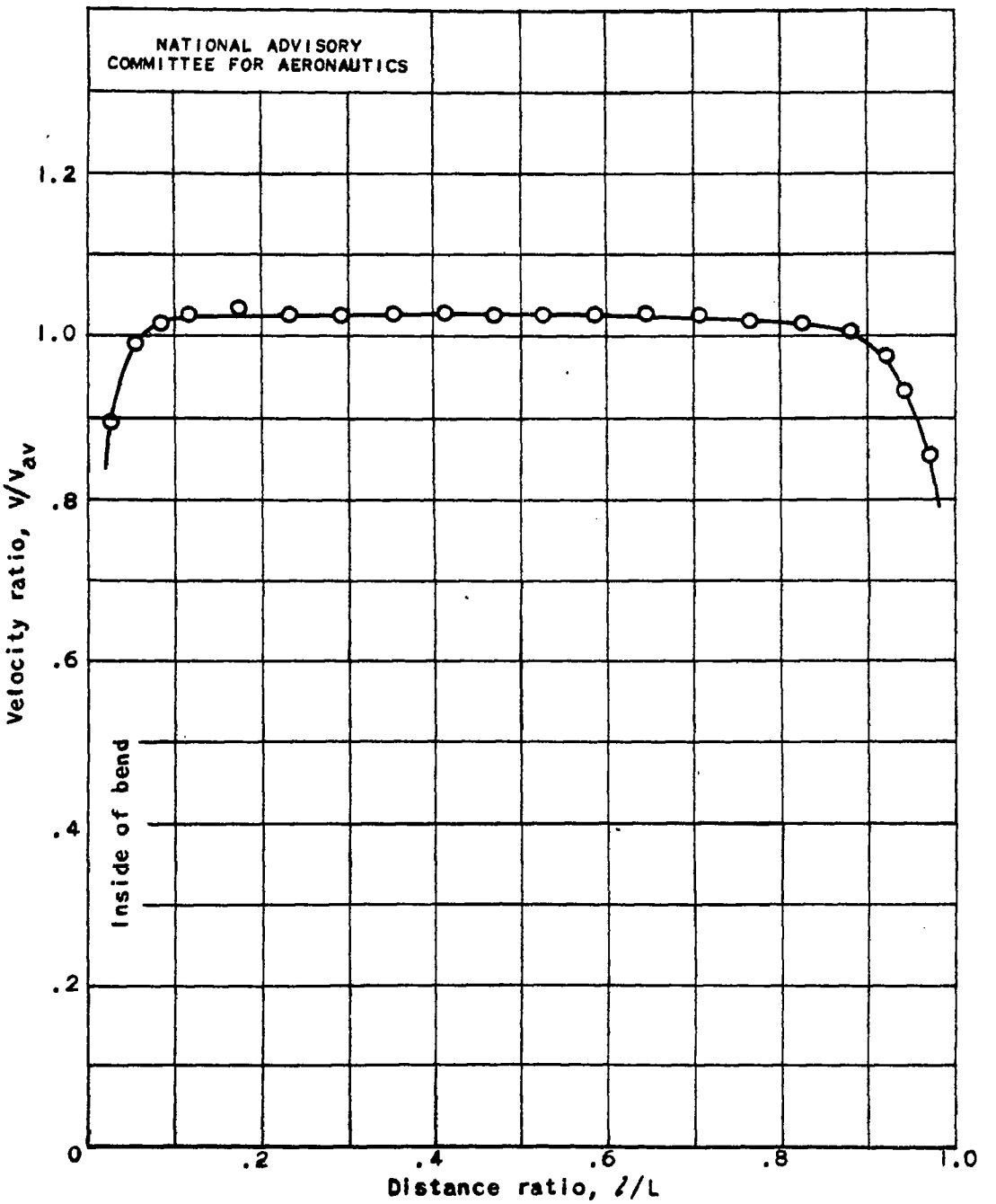

Figure 4. - Velocity profile at elbow inlet, station 2. Survey B; no carburetor.

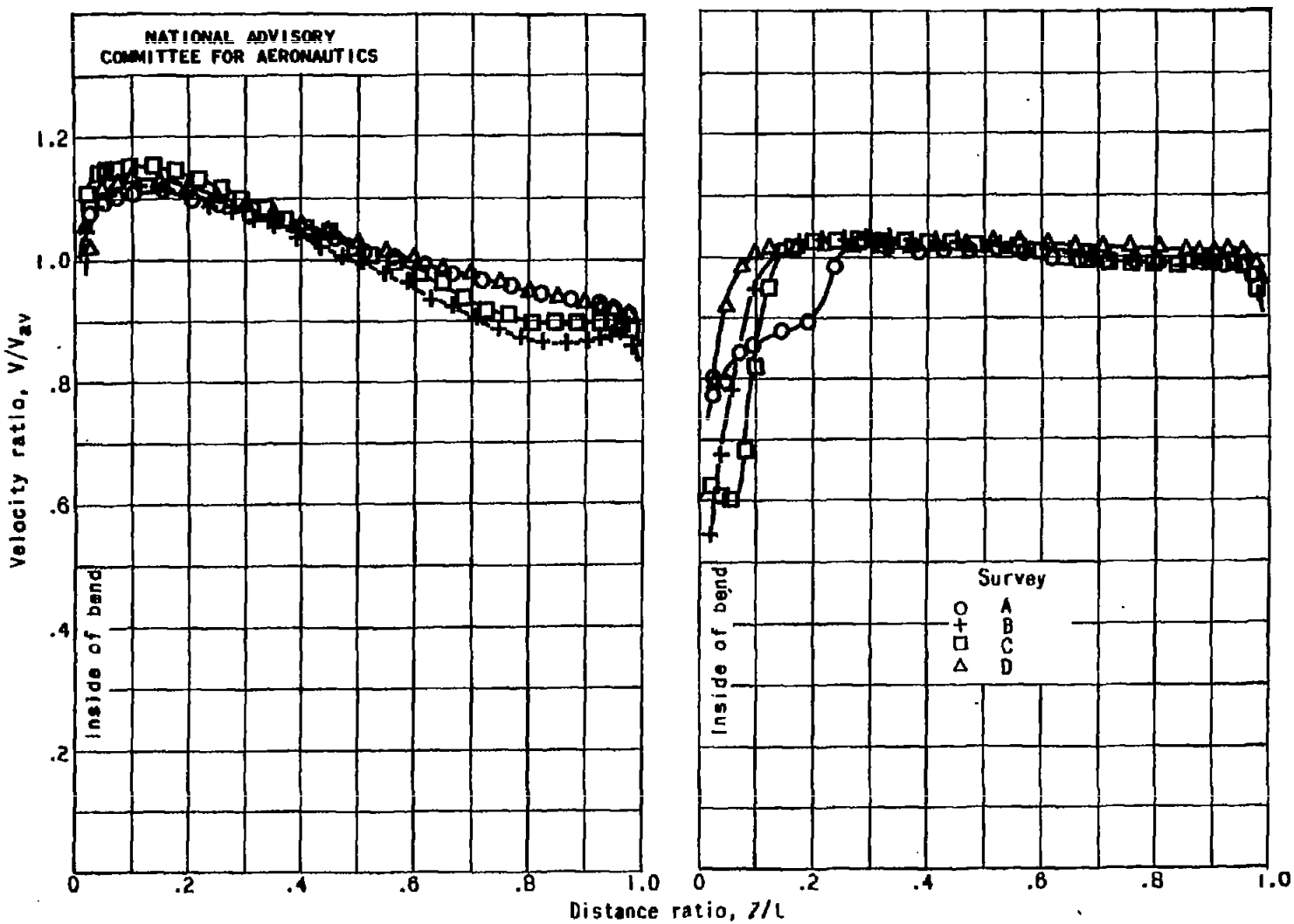

(a) Elbow outlet, station 3.

(b) 6 inches downstream of elbow outlet, station 4.

Figure 5. - Velocity profile at outlet and 6 inches downstream of outlet of elbow alone. No carburetor.

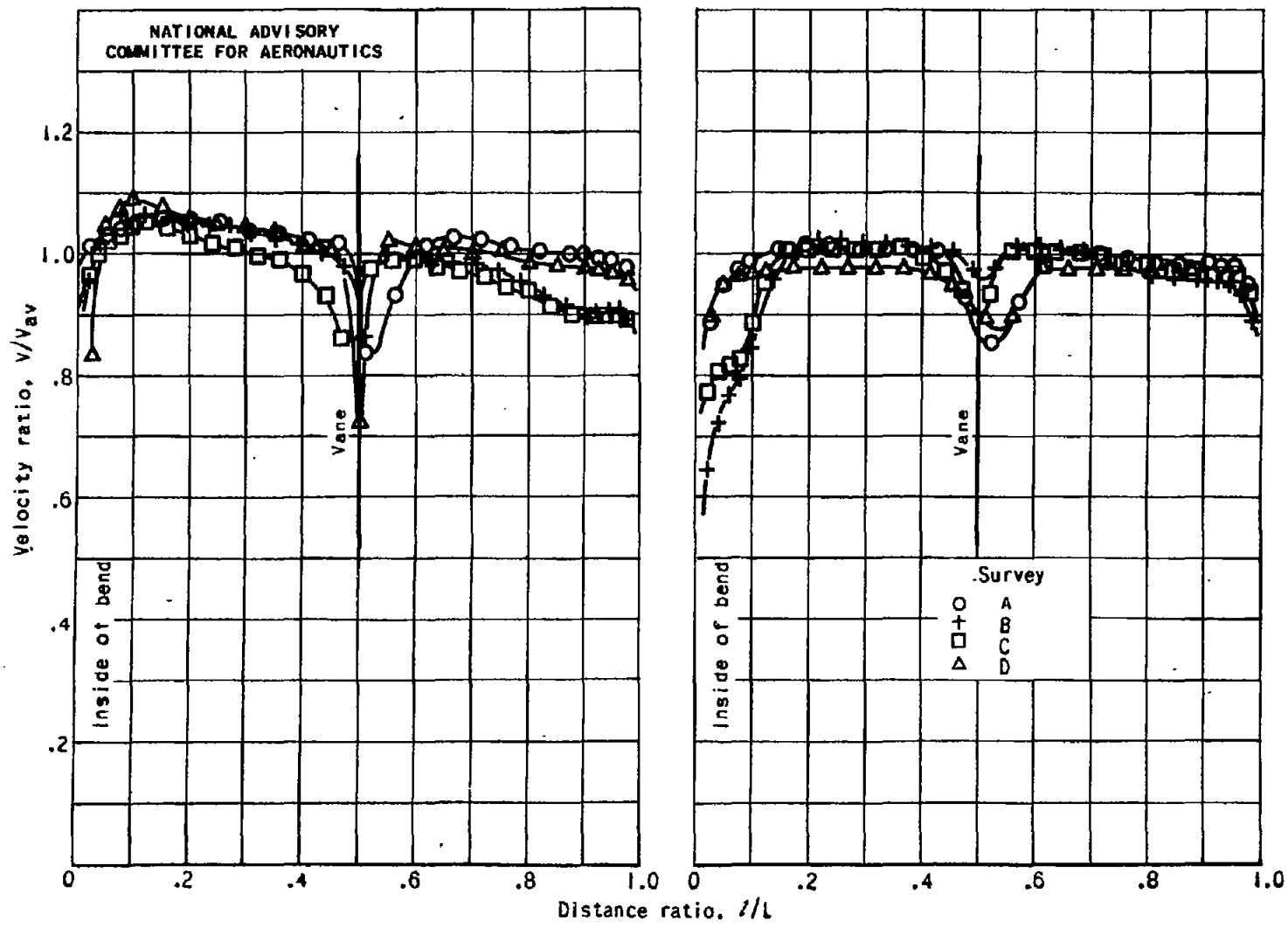

(a) Elbow outlet, station 3.

(b) 6 inches downstream of outlet, station 4.

Figure 6. - Velocity profile at outlet and 6 inches downstream of elbow outlet with vane. No carburetor.

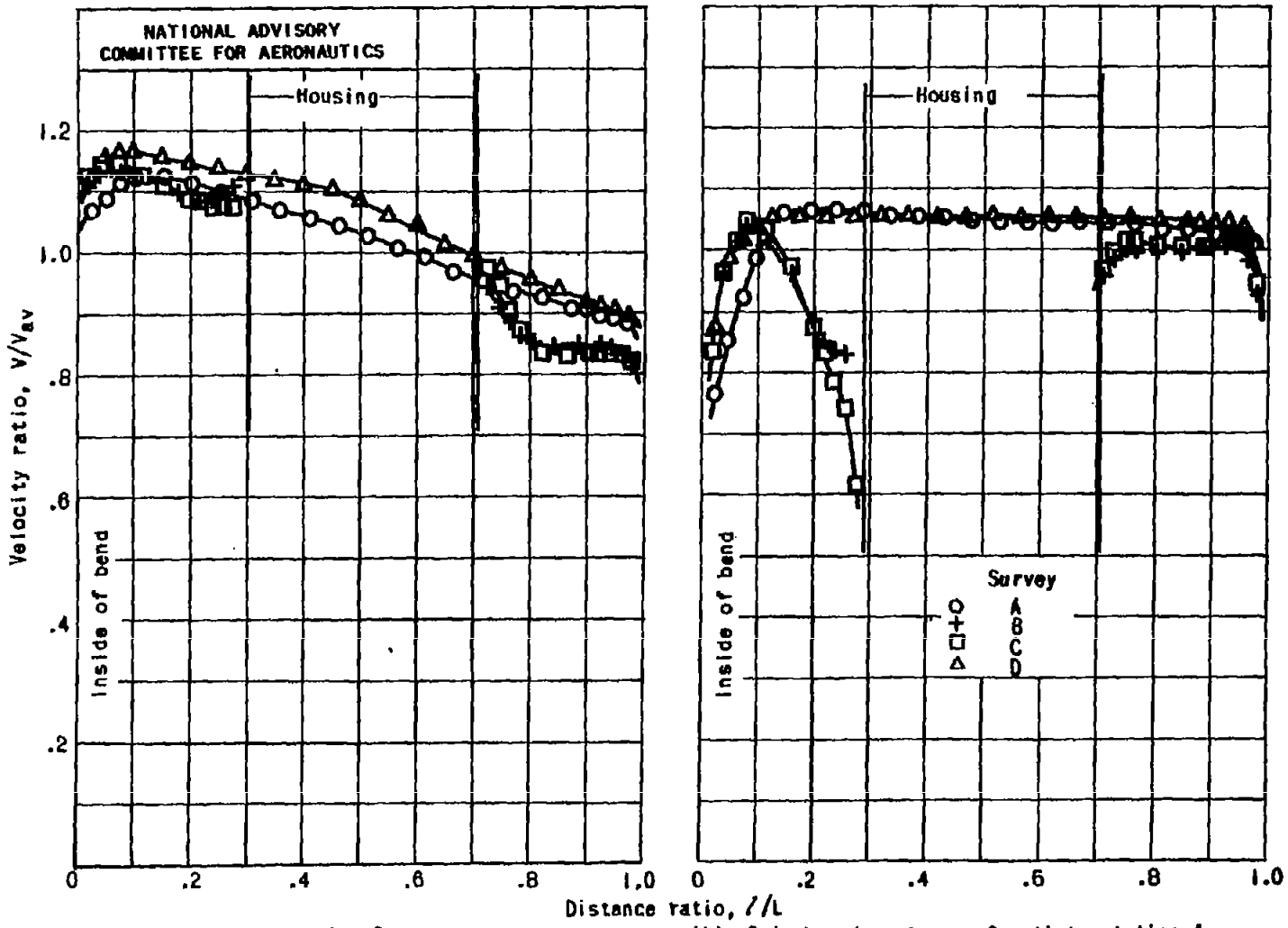

(a) Elbow outlet, station 3.

(b) 6 inches downstream of outlet, station 4.

Figure 7. - Velocity profile at outlet and 6 inches downstream of elbow outlet with streamlined impeller-shaft housing. No carburetor.

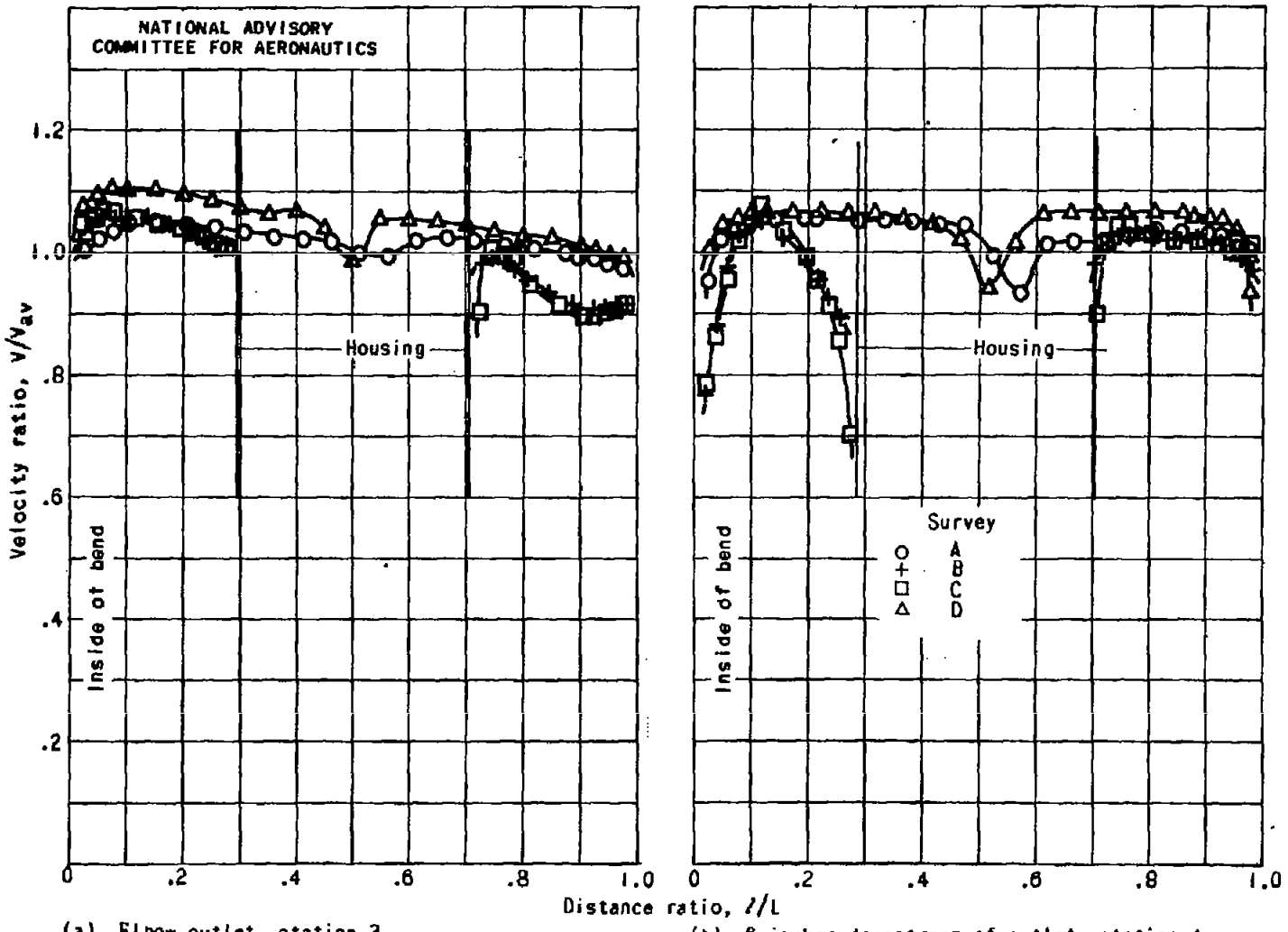

(a) Elbow outlet, station 3.

(b) 6 inches downstream of outlet, station 4.

Figure 8. - Velocity profile at outlet and 6 inches downstream of elbow outlet with vane and streamlined impeller-shaft housing. No carburetor.

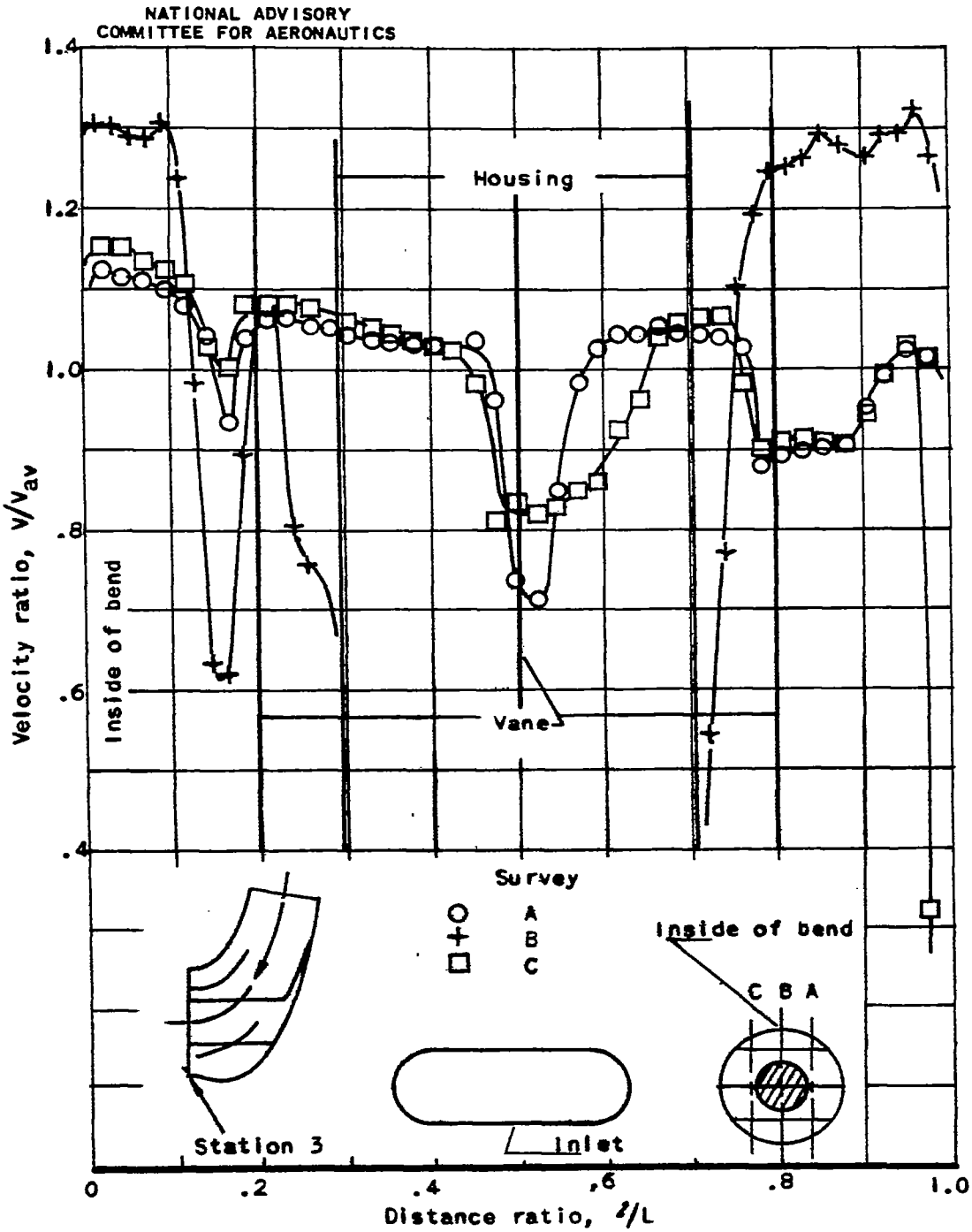

Figure 9. - Velocity profile at outlet of conventional elbow used to determine limiting dimensions of NACA elbow. No carburetor.

NATIONAL ADVISORY
COMMITTEE FOR AERONAUTICS

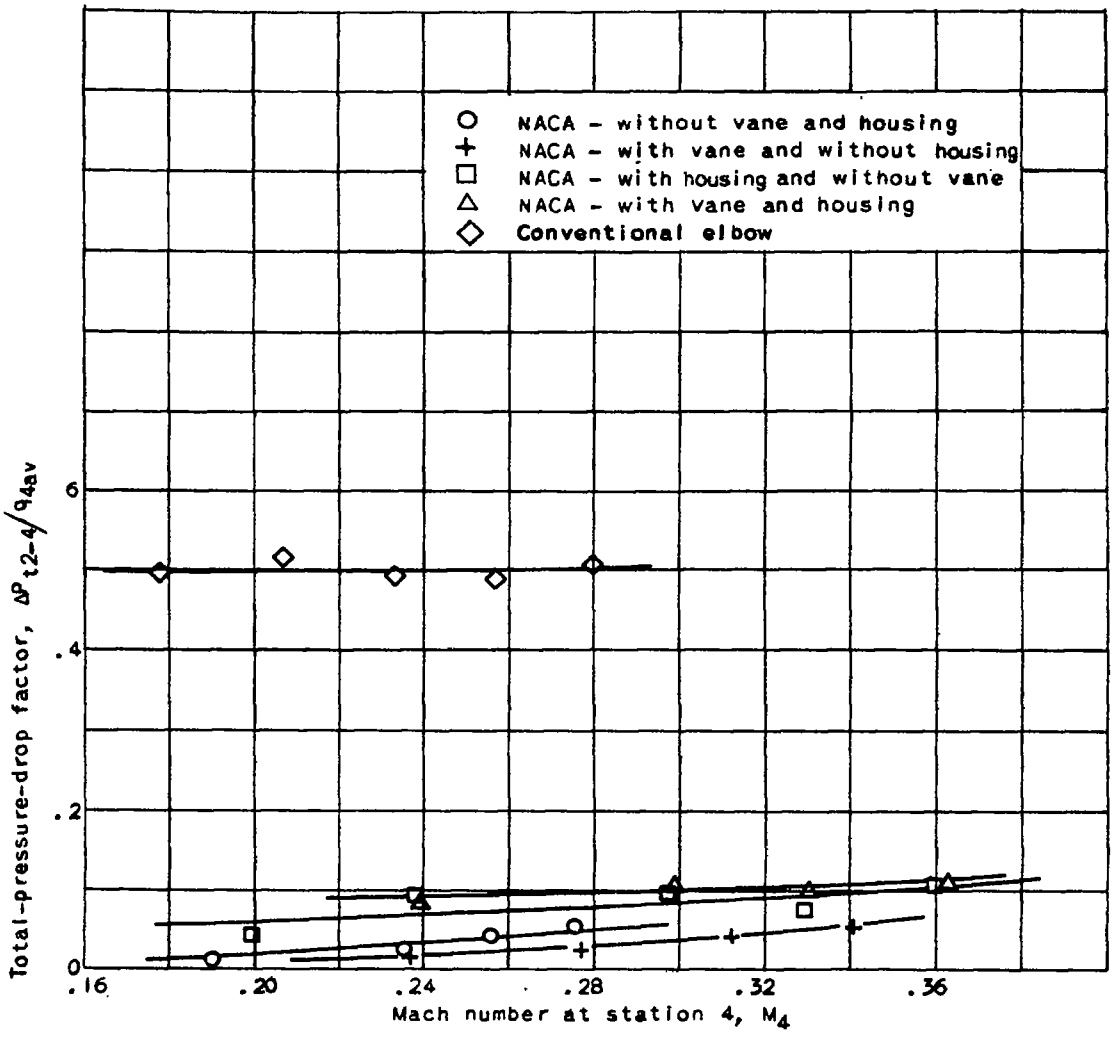

Figure 10. - Variation of total-pressure-drop factor with Mach number for conventional elbow and NACA-designed elbow.

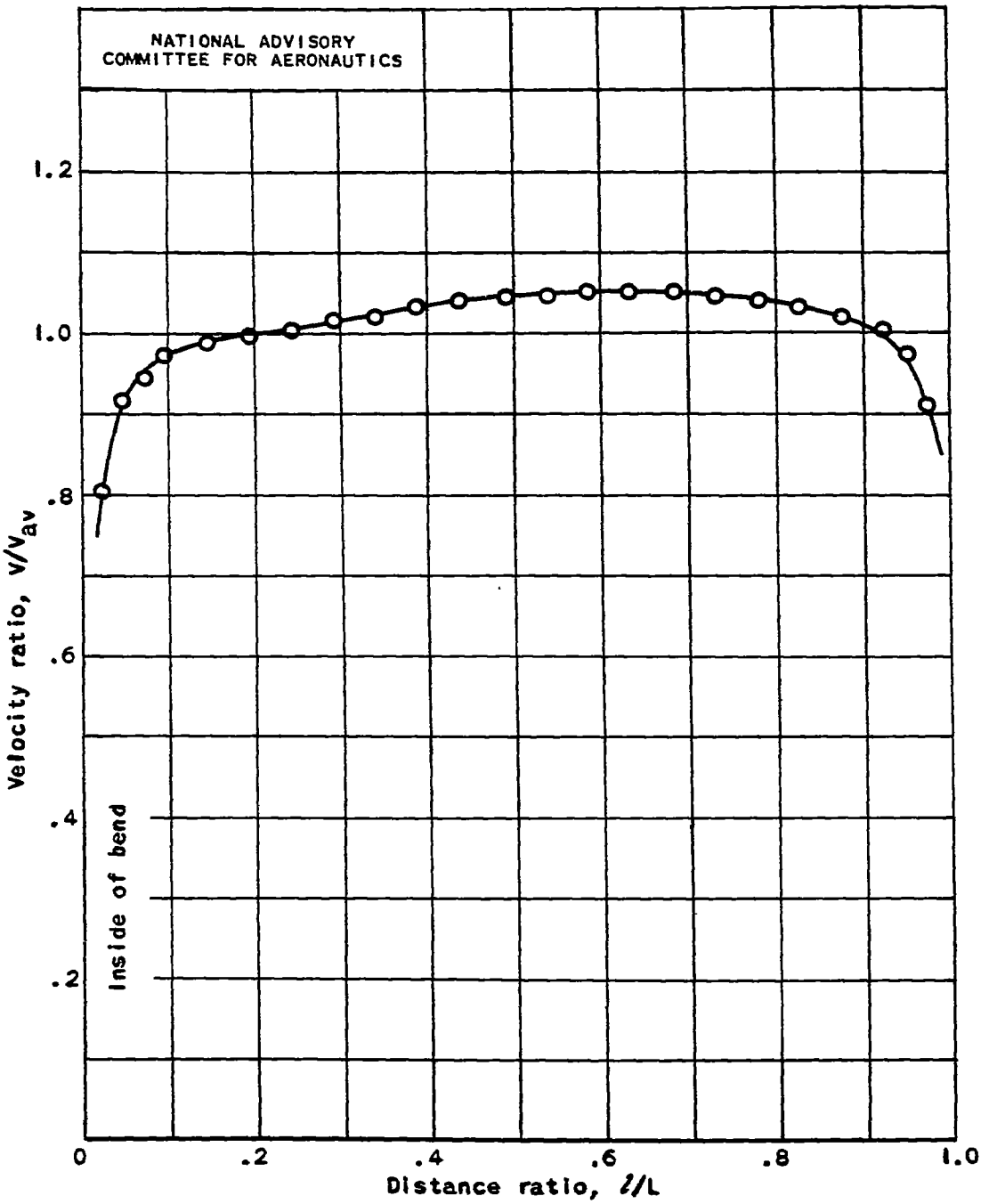

Figure 11. - Velocity profile at carburetor inlet. Station 2; throttle, full-open; survey B.

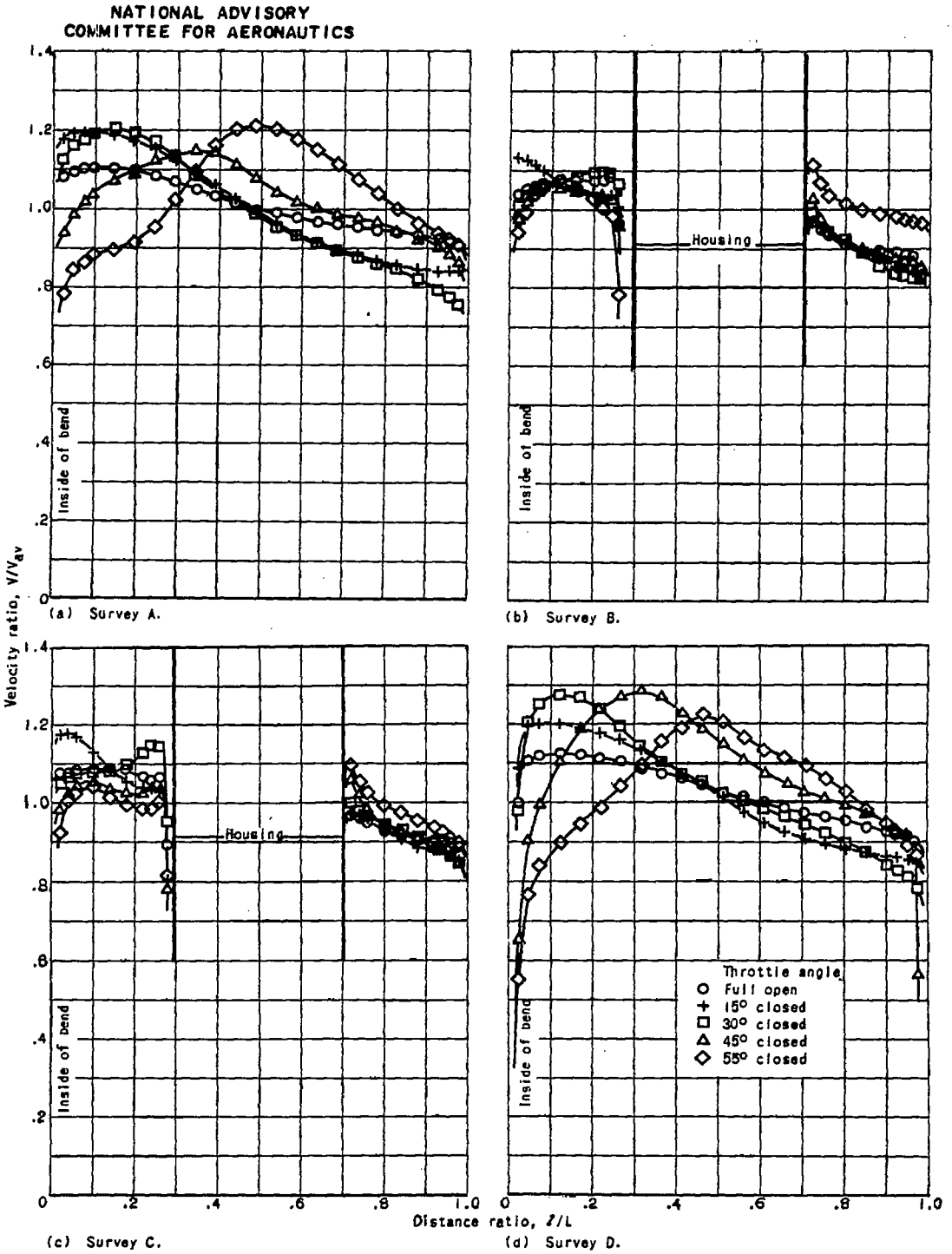

Figure 12. - Effect of carburetor-throttle angle on velocity profile at outlet of elbow with streamlined impeller-shaft housing. Station 3.

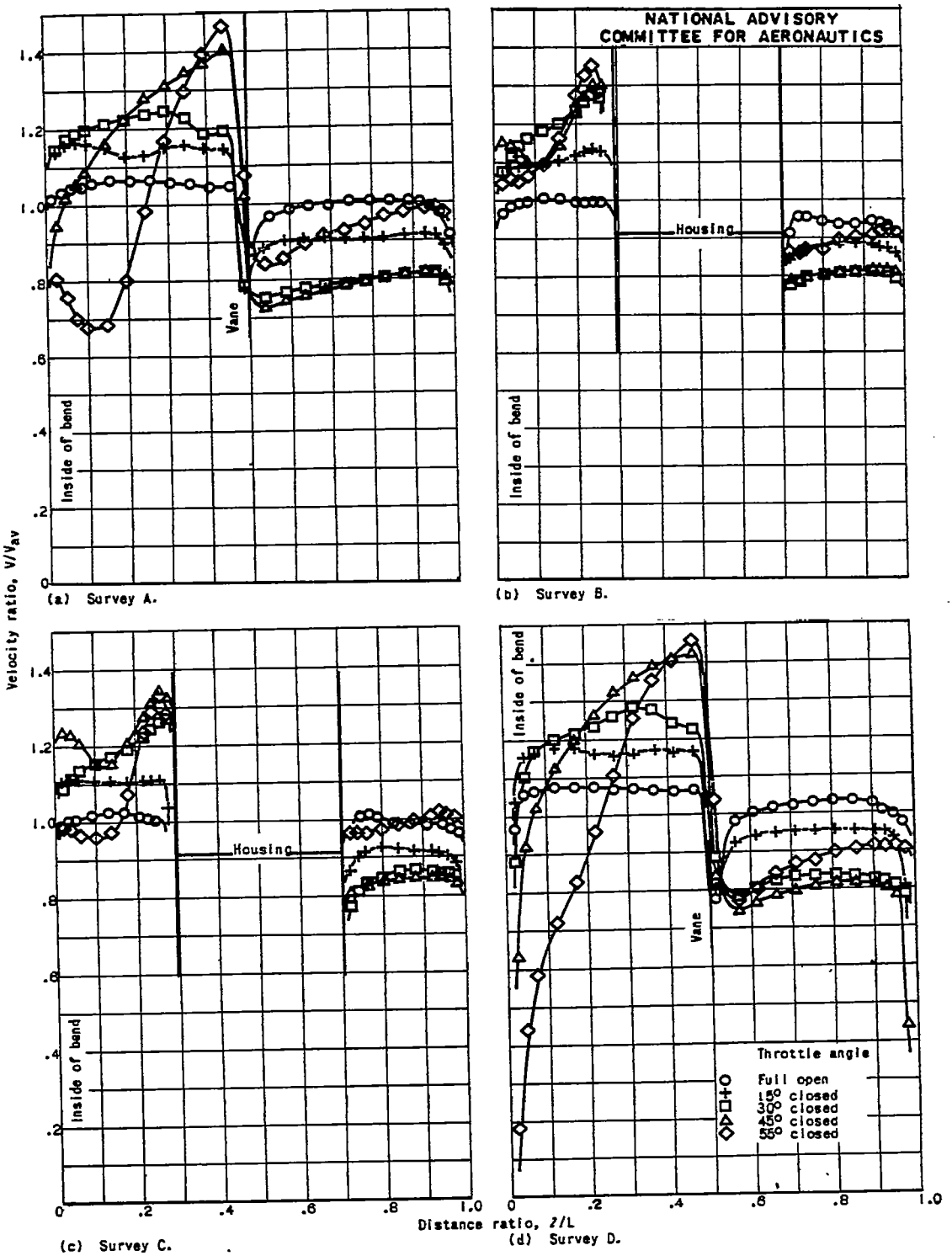

Figure 13. - Effect of carburetor-throttle angle on velocity profile at outlet of elbow with streamlined impeller-shaft housing and vane. Station 3.

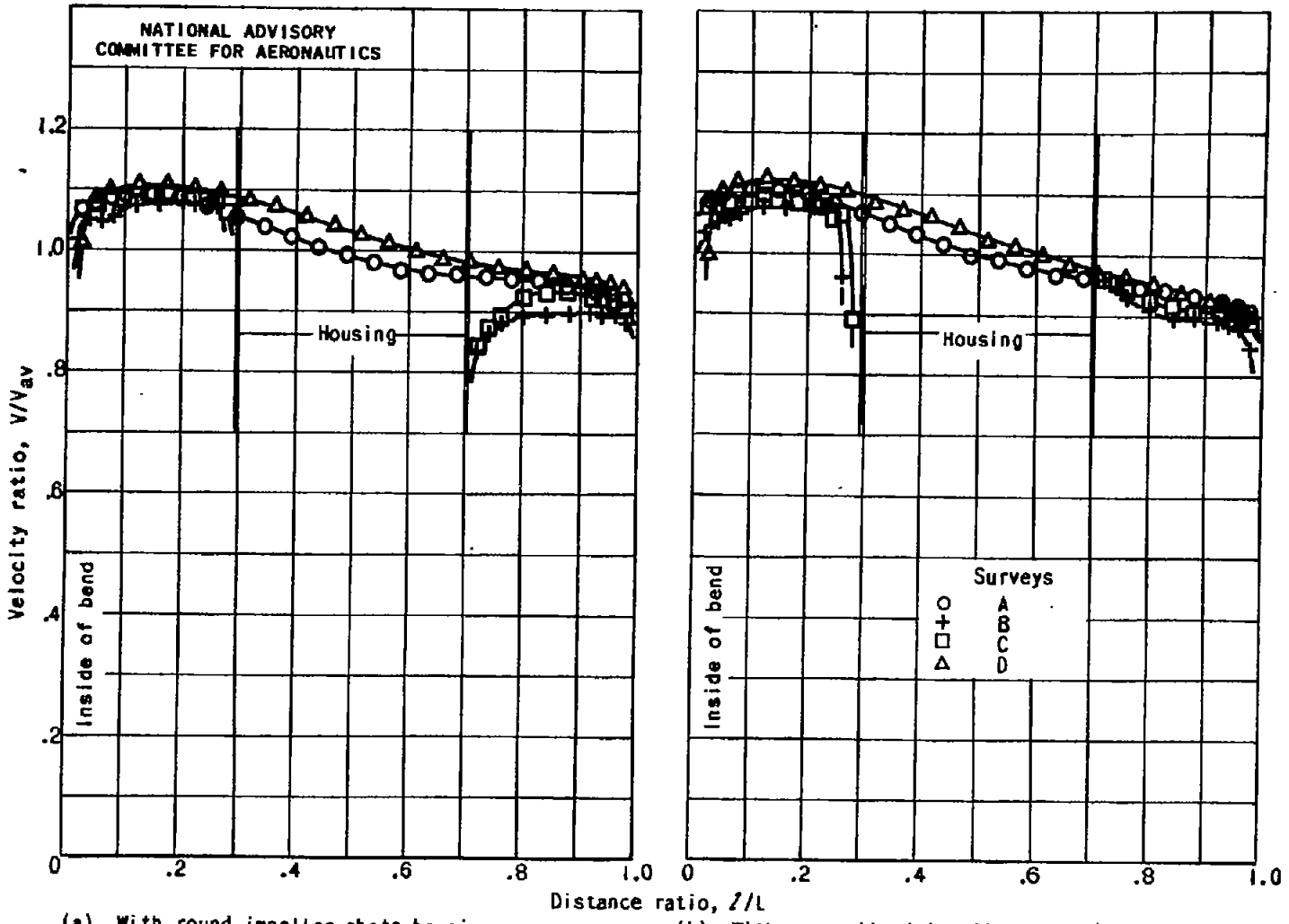

(a) With round impeller-shaft housing.

(b) With streamlined impeller-shaft housing.

Figure 14. - Effect of streamlining the impeller-shaft housing on velocity profile at elbow outlet. Full-open carburetor throttle. Station 3.

FOR FORM (10 Feb 47)

Gentert, D. C.
Todd, D. J. and
others

AUTHOR(S)

DIVISION: Power Plants, Reciprocating (6)
SECTION: Induction and Supercharging (2)
CROSS REFERENCES: Manifolds, Intake (59655); Induction systems - Superchargers (51886)

ATI- 8460

ORIG. AGENCY NUMBER
TN-1148

REVISION

AMER. TITLE: Flow tests of an NACA-designed supercharger inlet elbow and the effects of various components on the flow characteristics at the elbow outlet

FORIGN. TITLE:

ORIGINATING AGENCY: National Advisory Committee for Aeronautics, Washington, D. C.

TRANSLATION:

COUNTRY	LANGUAGE	FORIGN CLASS	U. S. CLASS.	DATE	PAGES	ILLUS.	FEATURES
U.S.	Eng.		Unclass.	Oct '46	26	14	diagrs, graphs, drwgs

ABSTRACT

An investigation was conducted on a supercharger inlet elbow to determine effects of a vane installed normal to the plane of bend, an impeller-shaft housing, and a combination of the two on outlet-velocity distribution and total pressure drop through elbow. Outlet-velocity profile was uniform and total-pressure drop factor of elbow was approximately [illegible] vane in the elbow without housing and car- [illegible]ion but lowered total pressure drop factor. [illegible]t must be addressed to: N.A.C.A.,

AD-B806 076

[illegible] INDEX

WRIGHT FIELD, OHIO, USAAF

TSDIN FORM 69 (13 NOV 47)

Guentert, D. C.
Todd, D. J. and others

AUTHOR(S)

DIVISION: Power Plants, Reciprocating (6)
SECTION: Induction and Supercharging (2)
CROSS REFERENCES: Manifolds, Intake (59655); Induction systems - Superchargers (51886)

ATI- 8406

ORIG. AGENCY NO. 3EB TN-1148

REVISION

AMER. TITLE: Flow tests of an NACA-designed supercharger inlet elbow and t effects of various components on the flow characteristics at the elbow c .tlet

FORG'N. TITLE:

ORIGINATING AGENCY: National Advisory Committee for Aeronautics, Washington, D. C.

TRANSLATION:

COUNTRY	LANGUAGE	FORG'N.CLASS	U. S.CLASS.	DATE	PAGES	ILLUS.	FEATURES
U.S.	Eng.		Unclass.	Oct'46	26	14	diagrs, graphs,drwgs

ABSTRACT

An invastigation was conducted on a supercharger inlet elbow to determine effects of a vane installed normal to the plane of bend, an impeller-shaft housing, and a combination of the two on outlet-velocity distribution and total pressure drop through elbow. Outlet-velocity profile was uniform and total-pressure drop factor of elbow was approximately 0.05 at Mach number 0.28. Addition of the vane in the elbow without housing and carburetor improved outlet-velocity distribution but lowered total pressure drop factor.

NOTE: Requests for copies of this report must be addressed to: N.A.C.A., Washington, D. C.