UNCLASSIFIED

AD NUMBER
ADB805896
LIMITATION CHANGES
TO: **Approved for public release; distribution is unlimited.**
FROM: **Distribution authorized to DoD only; Administrative/Operational Use; APR 1947. Other requests shall be referred to National Aeronautics and Space Administration, Washington, DC. Pre-dates formal DoD distribution statements. Treat as DoD only.**
AUTHORITY
NASA TR Server website

THIS PAGE IS UNCLASSIFIED

W 110
1500 .t.2

NATIONAL ADVISORY COMMITTEE FOR AERONAUTICS

TECHNICAL NOTE

APR 17 1947

No. 1171

ON SUBSONIC COMPRESSIBLE FLOWS BY A METHOD OF CORRESPONDENCE

II - APPLICATION OF METHODS TO STUDIES OF FLOW WITH CIRCULATION ABOUT A CIRCULAR CYLINDER

By Shepard Bartnoff and Abe Gelbart
Syracuse University

Aircraft Engine Research Laboratory
Cleveland, Ohio

FOR REFERENCE

NOT TO BE TAKEN FROM THIS ROOM

Washington
April 1947

N A C A LIBRARY
LANGLEY MEMORIAL AERONAUTICAL
LABORATORY
Langley Field, Va.

NASA Technical Library
3 1176 01425 7571

NATIONAL ADVISORY COMMITTEE FOR AERONAUTICS

TECHNICAL NOTE NO. 1171

ON SUBSONIC COMPRESSIBLE FLOWS BY A METHOD OF CORRESPONDENCE

II – APPLICATION OF METHODS TO STUDIES OF FLOW WITH CIRCULATION ABOUT A CIRCULAR CYLINDER

By Shepard Bartnoff and Abe Gelbart

SUMMARY

A general method for studying the flow of a compressible fluid around a closed body has been discussed previously in part I of this report. In the present paper application is made to the specific case in which the linearized equation of state is used. For a given incompressible flow around a specific profile, a corresponding compressible flow is found. The flow at infinity remains unchanged. Detailed studies are made of the flow with circulation around a unit circle, and velocity distributions are found for a wide range of Mach number and angle of attack. Comparisons are made with other methods.

INTRODUCTION

The present report is the continuation of a previous report by Gelbart (reference 1) in which a general method for studying the flow of a compressible fluid around a closed body is discussed. The method is based on finding compressible flows that correspond to given incompressible flows.

Since the compressible complex potential in the general case is not an analytic function, the ordinary theory of analytic functions of a complex variable is not applicable. However, in the hodograph plane (where the variables are the velocity magnitude and the direction of the flow) the complex potential is a function of the type studied by Bers and Gelbart (references 2 and 3) and termed by them "sigma-monogenic."

In the present report, the condition under which the differential equations of a compressible flow in the hodograph plane become Cauchy-Riemann equations is used. This occurs when the linearized equation of

state is used ($\gamma = -1$). The complex potential in the hodograph variables is then an analytic function and the theory of functions of a complex variable is applicable. The linearized equation of state is used throughout in this report.

Emphasis is placed on the compressible flow with circulation around a unit circle. The correspondence function is chosen so as to yield this flow to a very close approximation even for fairly high free-stream Mach numbers. The distortion of the body is very slight, but, as is to be expected, increases for very high free-stream Mach numbers. The resulting body shapes are studied for the entire range of possible free-stream Mach number, which for subsonic flows is from 0 to 1. Resulting body shapes are also studied for different angles of attack. Finally, velocity distributions are computed around the slightly distorted unit circle for different free-stream Mach numbers and for different angles of attack.

Some comparisons are made with the results of Tsien and Bers. Bers' and Tsien's formulas turn out to be special cases of the main formula derived in this report. One advantage of the present method is that it yields flows with circulation about nonsymmetric closed profiles.

This work was sponsored by and conducted with the financial assistance of the National Advisory Committee for Aeronautics. This report was submitted in July 1945.

GENERAL FLOW THEORY

Several of the more commonly used equations governing the behavior of fluids will be mentioned here without proof. These are relations involving the quantities: velocity q, pressure p, density ρ, ratio of the specific heat at constant pressure to the specific heat at constant volume γ, and the velocity of sound a. Subscripts of zero (i.e., p_o, ρ_o, a_o) refer to values of the respective quantities at a stagnation point $(q = 0)$.

The first fundamental relation is Bernoulli's equation, which may be written in differential form

$$q\,dq + \frac{1}{\rho}\,dp = 0 \tag{1}$$

Another fundamental relation is the isentropic relation (adiabatic equation of state)

$$p = p_o \left(\frac{\rho}{\rho_o}\right)^{\gamma} \tag{2}$$

The velocity of sound is given by

$$a^2 = \frac{dp}{d\rho} = \frac{\gamma p}{\rho} \tag{3}$$

Hence

$$a_o{}^2 = \gamma \frac{p_o}{\rho_o} \tag{4}$$

The units of density and velocity will be so chosen that

$$\left.\begin{aligned} \rho_o &= 1 \\ a_o &= 1 \end{aligned}\right\} \tag{5}$$

The quantities ρ and q will then be dimensionless.

The following relations are easily derived.

$$a^2 = 1 - \frac{1}{2}(\gamma - 1)\, q^2 \tag{6}$$

$$\rho = \left[1 - \frac{1}{2}(\gamma - 1)\, q^2\right]^{\frac{1}{\gamma-1}} \tag{7}$$

$$p = p_o \left[1 - \frac{1}{2}(\gamma - 1)\, q^2\right]^{\frac{\gamma}{\gamma-1}} \tag{8}$$

The Mach number M is defined by

$$M = \frac{q}{a} \tag{9}$$

The symbols M_∞ and q_∞ refer to the values of these respective quantities in the free stream.

The velocity potential ϕ and the stream function ψ for an incompressible flow satisfy the differential equations,

$$\left.\begin{aligned} \phi_x &= \psi_y \\ \phi_y &= -\psi_x \end{aligned}\right\} \tag{10}$$

the subscripts x and y denoting partial differentiation with respect to these variables. These equations are the Cauchy-Riemann equations, so that

$$\Omega = \phi + i\psi \tag{11}$$

is an analytic function of the complex variable $z = x + iy$.

If instead of using the independent variables x and y in the physical plane, the independent variables q and θ in the hodograph plane are used, where q is the magnitude of the velocity and θ is its direction angle, the differential equations become

$$\left.\begin{aligned} \phi_\theta &= q\,\psi_q \\ \phi_q &= -\frac{1}{q}\psi_\theta \end{aligned}\right\} \tag{12}$$

By making the change of variable

$$\tilde{q} = \int_{q_\infty}^{q} \frac{dq}{q} \tag{13}$$

the system (12) becomes

$$\left.\begin{aligned} \phi_\theta &= \psi_{\tilde{q}} \\ \phi_{\tilde{q}} &= -\psi_\theta \end{aligned}\right\} \tag{14}$$

which are again the Cauchy-Riemann equations. Thus, in the hodograph plane the incompressible complex potential is an analytic function of the complex variable $w = \theta + i\tilde{q}$.

The physical and hodograph variables for an incompressible flow are connected by the relation,

$$dz = e^{-iw}\, d\Omega \tag{15}$$

The analogous differential equations for a compressible flow in the physical plane are

$$\left.\begin{aligned} \phi_x &= \frac{1}{\rho}\psi_y \\ \phi_y &= -\frac{1}{\rho}\psi_x \end{aligned}\right\} \tag{16}$$

and in the hodograph plane are

$$\left.\begin{aligned} \phi_\theta &= \frac{q}{\rho}\psi_q \\ \phi_q &= -\frac{1 - M^2}{\rho q}\psi_\theta \end{aligned}\right\}, \tag{17}$$

System (16) is nonlinear, and no systematic mathematical treatment for such equations exists. However, methods for a systematic treatment of the solutions of equations (17) have been developed in reference 1.

The equation analogous to equation (15) for a compressible flow is

$$dz = \frac{e^{i\theta}}{q}\left(d\phi + \frac{1}{\rho}\, d\psi\right) \tag{18}$$

Equations (17) may be symmetrized by the change of variable

$$\tilde{q} = \int_{q_\infty}^{q} \frac{\sqrt{1 - M^2}}{q}\, dq \tag{19}$$

Note that $\tilde{q}_\infty = 0$.

Equations (17) then become

$$\left.\begin{aligned} \phi_e &= \frac{\sqrt{1 - M^2}}{\rho}\psi_{\tilde{q}} \\ \phi_{\tilde{q}} &= -\frac{\sqrt{1 - M^2}}{\rho}\psi_e \end{aligned}\right\} \tag{20}$$

If $\frac{\sqrt{1 - M^2}}{\rho}$ = constant, equations (20) reduce to the Cauchy-Riemann equations. When $\frac{\sqrt{1 - M^2}}{\rho}$ = constant, the constant can be evaluated by choosing $q = 0$. Here $M_o = \left[M(q)\right]_{q=o} = 0$ and

$$\left.\frac{\sqrt{1 - M^2}}{\rho}\right|_{q=o} = \frac{1}{\rho_o} = 1 \tag{21}$$

This implies that $\gamma = -1$. For when M is replaced by q/a, it follows from equation (21) that

$$a^2 - q^2 - a^2\rho^2 = 0 \tag{22}$$

Then, by differentiation,

$$2a\frac{da}{dq}(1 - \rho^2) - 2q - 2a^2\rho\frac{d\rho}{dq} = 0 \tag{23}$$

From relation (6),

$$2a\frac{da}{dq} = -(\gamma - 1)q$$

and from relations (7) and (6),

$$\begin{aligned} \frac{d\rho}{dq} &= -q\left(1 - \frac{\gamma - 1}{2}q^2\right)^{\frac{1}{\gamma-1} - 1} \\ &= \frac{-q\left(1 - \frac{\gamma - 1}{2}q^2\right)^{\frac{1}{\gamma-1}}}{1 - \frac{\gamma - 1}{2}q^2} \\ &= -\frac{q\rho}{a^2} \end{aligned}$$

Substitution of these values into equation (23) gives

$$[-(\gamma - 1) - 2][(1 - \rho^2)q = 0$$

$$[-1(\gamma - 1) - 2] = 0$$

$$\therefore \gamma = -1 \tag{24}$$

With this value of γ, the equation of state (2) becomes

$$p = p_o \rho^{-1} \tag{25}$$

and since the density is proportional to the inverse of the volume, the volume becomes a linear function of the pressure. This linearized equation of state will be used throughout the remainder of this paper.

It should be emphasized that no actual gas satisfies the pressure-density relationship described by equation (25). For actual gases, γ lies between 1 and 1.6, having a value of 1.4 for air. The simplification resulting when $\gamma = -1$, and the fact that the theory of analytic functions of a complex variable then becomes applicable, led Chaplygin and later von Kármán, Tsien, and others to study the properties of such a fictitious gas (references 4 to 11).

Von Kármán (reference 7), however, showed that using the value $\gamma = -1$ is equivalent to replacing the curve of pressure against reciprocal density in the adiabatic case by a tangent line to that curve. At and near the point of tangency, the fictitious gas approximates the behavior of the actual gas. The study of the behavior of the fictitious gas is justified by the insight such a study gives into the solution of the actual problem for subsonic flows.

When $\gamma = -1$, equations (6) to (8) become

$$a^2 = 1 + q^2 \tag{26}$$

$$\rho = \frac{1}{\sqrt{1 + q^2}} \tag{27}$$

$$p = p_o\sqrt{1 + q^2} \tag{28}$$

and it follows directly that

$$q = \frac{M}{\sqrt{1 - M^2}} \tag{29}$$

Equations (20) reduce to the Cauchy-Riemann equations,

$$\begin{aligned} \phi_\theta &= \psi_{\tilde{q}} \\ \phi_{\tilde{q}} &= -\psi_\theta \end{aligned} \tag{30}$$

Thus, $\Omega = \phi + i\psi$ is an analytic function of $w = \theta + i\tilde{q}$.

From equations (19), (21), and (27) it follows that

$$\begin{aligned} \tilde{q} &= \int_{q_\infty}^{q} \frac{\sqrt{1 - M^2}}{q}\, dq = \int_{q_\infty}^{q} \frac{dq}{q\sqrt{1 + q^2}} \\ &= -\log\left(\frac{1 + \sqrt{1 + q^2}}{q}\right)\Bigg|_{q_\infty}^{q} \\ &= \log\left(\frac{Kq}{1 + \sqrt{1 + q^2}}\right) \end{aligned} \tag{31}$$

where

$$K = \frac{1 + \sqrt{1 + q_\infty^2}}{q_\infty} \tag{32}$$

Hence,

$$e^{\tilde{q}} = \frac{Kq}{1 + \sqrt{1 + q^2}} \tag{33}$$

From this equation,

$$\frac{1}{q} = \frac{K}{2e^{\tilde{q}}} - \frac{e^{\tilde{q}}}{2K} \tag{34}$$

Also, from equations (33) and (27),

$$\frac{\sqrt{1 + q^2}}{q} = \frac{1}{\rho q}$$

$$= \frac{K}{e^{\tilde{q}}} - \frac{1}{q}$$

and by use of equation (34),

$$\frac{1}{\rho q} = \frac{K}{2e^{\tilde{q}}} + \frac{e^{\tilde{q}}}{2K} \tag{35}$$

Upon substituting the values of $\frac{1}{q}$ and $\frac{1}{\rho q}$ from equations (34) and (35) into equation (18), it follows that

$$dz = \frac{e^{ie}}{2}\left[\left(\frac{K}{e^{\tilde{q}}} - \frac{e^{\tilde{q}}}{K}\right) d\phi + i\left(\frac{K}{e^{\tilde{q}}} + \frac{e^{\tilde{q}}}{K}\right) d\psi\right]$$

$$= \frac{e^{ie}}{2}\left[\frac{K}{e^{\tilde{q}}}(d\phi + i d\psi) - \frac{e^{\tilde{q}}}{K}(d\phi - i d\psi)\right]$$

$$= \frac{K}{2} e^{i}(e + i\tilde{q})(d\phi + i d\psi) - \frac{1}{2K} e^{i}(e - i\tilde{q})(d\phi - i d\psi)$$

$$= \frac{K}{2} e^{iw} d\Omega - \frac{1}{2K} \overline{e^{-iw} d\Omega}$$

and

$$z = \frac{K}{2}\int e^{iw} d\Omega - \frac{1}{2K}\int \overline{e^{-iw} d\Omega} \tag{36}$$

Since $\Omega = \phi + i\psi$ is an analytic function of the complex variable $w = \theta + i\tilde{q}$, the mapping

$$w = -i \log \frac{2 \frac{d}{d\zeta} f(\zeta)}{K \frac{d}{d\zeta} G(\zeta)} \tag{37}$$

defines a complex potential $G(\zeta)$ of a compressible flow in the ζ-plane, where $f(\zeta)$ and $G(\zeta)$ are analytic functions of the complex variable ζ. The region of regularity of $f(\zeta)$ and $G(\zeta)$ will be

dealt with later. The function $f(\zeta)$ will be called the correspondence function.

From equation (37), with primes denoting differentiation with respect to ζ,

$$e^{iw} = \frac{2}{K}\frac{f'(\zeta)}{G'(\zeta)} \tag{38}$$

and

$$e^{-iw} = \frac{K}{2}\frac{G'(\zeta)}{f'(\zeta)} \tag{39}$$

After substitution of equations (38) and (39) into equation (36), it follows that

$$z = \frac{K}{2}\int e^{iw}\, G'(\zeta)\, d\zeta - \frac{1}{2K}\int \overline{e^{-iw}\, G'(\zeta)\, d\zeta}$$

$$= \frac{K}{2}\int \frac{2}{K} f'(\zeta)\, d\zeta - \frac{1}{2K}\int \overline{\frac{K}{2}\frac{[G'(\zeta)]^2}{f'(\zeta)}\, d\zeta}$$

so that

$$z = f(\zeta) - \frac{1}{4}\int \overline{\frac{[G'(\zeta)]^2}{f'(\zeta)}\, d\zeta} \tag{40}$$

If $G(\zeta)$ represents the flow around a given closed body in the ζ-plane, equation (40) will map that flow into the z-plane. The correspondence function $f(\zeta)$ will be chosen in such a way that the flow in the z-plane will be essentially around the same profile as in the ζ-plane.

The compressible-flow velocity in the z-plane may be determined from equation (39). For,

$$e^{-iw} = e^{-i(\theta+i\tilde{q})} = \frac{K}{2}\frac{G'(\zeta)}{f'(\zeta)}$$

$$e^{-i\theta}\, e^{\tilde{q}} = \frac{K}{2}\frac{G'(\zeta)}{f'(\zeta)} \tag{41}$$

By taking absolute values,

$$e^{\tilde{q}} = \frac{K}{2}\left|\frac{G'(\zeta)}{f'(\zeta)}\right|$$

and making use of equation (33),

$$\frac{Kq}{1+\sqrt{1+q^2}} = \frac{K}{2}\left|\frac{G'(\zeta)}{f'(\zeta)}\right|$$

it follows that

$$q = \frac{4\left|\frac{G'(\zeta)}{f'(\zeta)}\right|}{4-\left|\frac{G'(\zeta)}{f'(\zeta)}\right|^2} \tag{42}$$

Stagnation points occur when $q = 0$. Thus, the stagnation points are located where

$$G'(\zeta) = 0 \tag{43}$$

It is desirable that the correspondence should not alter the flow at infinity. At infinity, $\theta = 0$ and $e^{\tilde{q}} = 1$. An examination of equation (41) shows that the condition for the flow to remain unchanged at infinity is

$$\lim_{\zeta \to \infty} \frac{K}{2}\frac{G'(\zeta)}{f'(\zeta)} = 1 \tag{44}$$

Since $G'(\zeta)$ is regular and different from zero at infinity and if $\lim_{\zeta \to \infty} \frac{G'(\zeta)}{f'(\zeta)}$ is to exist and be different from zero, the most general form that $f'(\zeta)$ can have is

$$f'(\zeta) = \sum_{n=0}^{\infty} b_n \frac{1}{\zeta^n}, \quad b_0 \neq 0 \tag{45}$$

where

$$\zeta = re^{i\lambda} \tag{46}$$

Then

$$f(\zeta) = b_{-1} + b_0 \zeta + b_1 \log \zeta - \sum_{n=1}^{\infty} \frac{b_{b+1}}{n} \frac{1}{\zeta^n} \tag{47}$$

Also

$$\lim_{\zeta \longrightarrow \infty} f'(\zeta) = b_0$$

and from equation (44)

$$b_0 = \lim_{\zeta \longrightarrow \infty} \frac{K}{2} G''(\zeta) \tag{48}$$

Thus, the condition of the flow at infinity in general predetermines the value of b_0.

It is desirable to obtain the integrand in the right-hand side of equation (40) as a power series in $\frac{1}{\zeta^n}$.

Set

$$\frac{1}{f'(\zeta)} = \frac{1}{\sum_{n=0}^{\infty} b_n \frac{1}{\zeta^n}}$$

$$= \sum_{n=0}^{\infty} B_n \frac{1}{\zeta^n} \tag{49}$$

Then

$$1 = \left(\sum_{n=0}^{\infty} bn \frac{1}{\zeta^n} \right) \left(\sum_{n=0}^{\infty} B_n \frac{1}{\zeta^n} \right)$$

$$= \sum_{n=0}^{\infty} \sum_{r=0}^{\infty} A_{n-r} B_r \frac{1}{\zeta^n}$$

Equating coefficients of like powers of $\left(\frac{1}{\zeta}\right)^n$,

$$\left.\begin{aligned}
1 &= b_o B_o \\
0 &= b_1 B_o + b_o B_1 \\
0 &= b_2 B_o + b_1 B_1 + b_o B_2 \\
&\cdots\cdots\cdots \\
0 &= b_n B_o + b_{n-1} B_1 + \ldots + b_1 B_{n-1} + b_o B_n \\
&\cdots\cdots\cdots\cdots\cdots
\end{aligned}\right\} \tag{50}$$

These equations yield the iteration formulas

$$\left.\begin{aligned}
B_o &= \frac{1}{b_o} \\
B_n &= -\frac{1}{b_o}(b_n B_o + b_{n-1} B_1 + \ldots + b_2 B_{n-2} + b_1 B_{n-1})
\end{aligned}\right\} \tag{51}$$

where $n > 0$, or

$$B_n = \frac{1}{b_o^{n+1}} \begin{vmatrix}
b_o & 0 & 0 & 0 & \ldots & 0 & 0 & 0 & 0 & 1 \\
b_1 & b_o & 0 & 0 & \ldots & 0 & 0 & 0 & 0 & 0 \\
b_2 & b_1 & b_o & 0 & \ldots & 0 & 0 & 0 & 0 & 0 \\
b_3 & b_2 & b_1 & b_o & \ldots & 0 & 0 & 0 & 0 & 0 \\
\cdots & \cdots & \cdots & \cdots & \cdots & \cdots & \cdots & \cdots & \cdots & \cdots \\
\cdots & \cdots & \cdots & \cdots & \cdots & \cdots & \cdots & \cdots & \cdots & \cdots \\
b_{n-3} & b_{n-4} & b_{n-5} & b_{n-6} & \ldots & b_1 & b_o & 0 & 0 & 0 \\
b_{n-2} & b_{n-3} & b_{n-4} & b_{n-5} & \ldots & b_2 & b_1 & b_o & 0 & 0 \\
b_{n-1} & b_{n-2} & b_{n-3} & b_{n-4} & \ldots & b_3 & b_2 & b_1 & b_o & 0 \\
b_n & b_{n-1} & b_{n-2} & b_{n-3} & \ldots & b_4 & b_3 & b_2 & b_1 & 0
\end{vmatrix} \tag{52}$$

Then set

$$-\frac{1}{4}\int\frac{[G'(\zeta)]^2}{f'(\zeta)}\,d\zeta = -\frac{1}{4}\int[G'(\zeta)]^2\left(\sum_{n=0}^{\infty} B_n\frac{1}{\zeta^n}\right)d\zeta$$

$$= C_1\,\bar{\zeta} + C_0\log\bar{\zeta} + \sum_{n=1}^{\infty} C_n\frac{1}{\bar{\zeta}^n} \tag{53}$$

Equation (40) then becomes

$$z = b_{-1} + b_0\,\zeta + b_1\log\zeta - \left(\sum_{n=1}^{\infty}\frac{b_{n+1}}{n}\frac{1}{\zeta^n}\right)$$

$$+ C_{-1}\,\bar{\zeta} + C_0\log\bar{\zeta} + \sum_{n=1}^{\infty} C_n\frac{1}{\bar{\zeta}^n} \tag{54}$$

When ζ is replaced by $re^{i\lambda}$ and $\bar{\zeta}$ by $re^{-i\lambda}$, equation (54) becomes

$$z = b_{-1} + b_0\,re^{i\lambda} + b_1\log r + b_1(i\lambda)$$

$$-\left(\sum_{n=1}^{\infty}\frac{b_{n+1}}{n}\frac{1}{r^n}e^{-in\lambda}\right) + C_{-1}\,re^{-i\lambda} + C_0\log r$$

$$+ C_0(-i\lambda) + \sum_{n=1}^{\infty} C_n\frac{1}{r^n}e^{in\lambda} \tag{55}$$

If a closed contour in the ζ-plane is to be mapped by equation (55) into a closed contour in the z-plane,

$$b_1 - C_0 = 0 \tag{56}$$

This predetermines the value of b_1.

Set

$$N = b_{-1} + b_1 \log r + C_0 \log r \tag{57}$$

Under the condition of equation (56)

$$z = N + b_0 re^{i\lambda} - \left(\sum_{n=1}^{\infty} \frac{b_{n+1}}{n} \frac{1}{r^n} e^{-in\lambda}\right)$$

$$+ C_{-1} re^{-i\lambda} + \sum_{n=1}^{\infty} C_n \frac{1}{r^n} e^{in\lambda} \tag{58}$$

THE FLOW AROUND A CIRCLE

The example of a compressible flow that will be treated here in detail is the flow with circulation around a circle. This example has been chosen because of its fundamental importance.

In determining the correspondence that will give the compressible flow around a unit circle, the complex potential function chosen is that of an incompressible flow with circulation around a circle of radius R in the ζ-plane, namely,

$$G(\zeta) = q_\infty\left(\zeta + \frac{R^2}{\zeta}\right) - \frac{i\Gamma}{2\pi} \log \frac{\zeta}{R} \tag{59}$$

where Γ is the circulation. Stagnation points occur where $G'(\zeta) = 0$ (equation (43)).

$$G'(\zeta) = q_\infty - \frac{i\Gamma}{2\pi} \frac{1}{\zeta} - \frac{q_\infty R^2}{\zeta^2} \tag{60}$$

If $\zeta = Re^{i\lambda}$,

$$G' = q_\infty - \frac{i\Gamma}{2\pi}\frac{1}{R}e^{-i\lambda} - q_\infty e^{-i2\lambda}$$

$$= q_\infty - \frac{i\Gamma}{2\pi}\frac{1}{R}\cos\lambda - \frac{\Gamma}{2\pi}\frac{1}{R}\sin\lambda - q_\infty\cos 2\lambda + iq_\infty\sin 2\lambda$$

$$= q_\infty(1 - \cos 2\lambda) - \frac{\Gamma}{2\pi}\frac{1}{R}\sin\lambda + i\left(q_\infty\sin 2\lambda - \frac{\Gamma}{2\pi}\frac{1}{R}\cos\lambda\right)$$

$$= \sin\lambda\left(2q_\infty\sin\lambda - \frac{\Gamma}{2\pi}\frac{1}{R}\right) + i\cos\lambda\left(2q_\infty\sin\lambda - \frac{\Gamma}{2\pi}\frac{1}{R}\right)$$

$$= e^{i\lambda}\left(2q_\infty\sin\lambda - \frac{\Gamma}{2\pi}\frac{1}{R}\right)$$

Hence

$$|G'| = 2q_\infty\sin\lambda - \frac{\Gamma}{2\pi}\frac{1}{R}$$

Let there be stagnation points at $\lambda = \alpha$, $\lambda = 180^\circ - \alpha$. Then,

$$2q_\infty\sin\alpha - \frac{\Gamma}{2\pi}\frac{1}{R} = 0$$

$$\frac{\Gamma}{2\pi} = 2q_\infty R\sin\alpha \tag{61}$$

Thus, fixing the circulation fixes the stagnation points and hence the angle of attack.

Equation (48) is used to fix the velocity at infinity. Since

$$\lim_{\zeta \to \infty} G'(\zeta) = q_\infty \tag{62}$$

$$b_0 = \frac{Kq_\infty}{2}$$

$$= \frac{1}{2}\left(\sqrt{1 + q_\infty^2} + 1\right) \tag{63}$$

The equation of a unit circle is $\zeta = e^{i\lambda}$. If equation (58) is to approximate such a circle, the sum of the coefficients of the $e^{i\lambda}$-terms should equal 1 and the coefficients of the other terms should approximate zero. The first step in achieving this end is to set the coefficients of all the $e^{-in\lambda}$-terms, $n > 2$, equal to zero; that is,

$$b_n = 0, \quad n > 2 \tag{64}$$

The correspondence function $f(\zeta)$ then reduces to

$$f(\zeta) = b_{-1} + b_0\,\zeta + b_1 \log \zeta - b_2 \frac{1}{\zeta} \tag{65}$$

and

$$f'(\zeta) = b_0 + b_1 \frac{1}{\zeta} + b_2 \frac{1}{\zeta^2} \tag{66}$$

Also, equation (58) becomes

$$z = N + b_0\,Re^{i\lambda} - \frac{b_2}{R} e^{-i\lambda}$$

$$+ C_{-1}\,Re^{-i\lambda} + C_1 \frac{1}{R} e^{i\lambda} + \sum_{n=2}^{\infty} C_n \frac{1}{R^n} e^{in\lambda} \tag{67}$$

The sum of the coefficients of the $e^{i\lambda}$-terms may be made equal to 1 by fixing R so that

$$b_0\,R + C_1 \frac{1}{R} = 1 \tag{68}$$

Also the $e^{-i\lambda}$-term may be eliminated entirely by fixing b_2 so that

$$-\frac{b_2}{R} + C_{-1}\,R = 0 \tag{69}$$

Then equation (67) becomes

$$z = N + e^{i\lambda} + \sum_{n=2}^{\infty} C_n \frac{1}{R^n} e^{in\lambda} \tag{70}$$

In this equation N is a translation constant that does not affect the shape of the body. The C_n coefficients are shown to be small and therefore the resulting body shape is essentially a circle.

It will be shown later that all the odd C_n coefficients are real and the even C_n coefficients are pure imaginary. Therefore

$$
\begin{aligned}
z &= x + iy \\
&= \cos\lambda - \frac{C_2}{i}\sin 2\lambda + C_3\cos 3\lambda - \frac{C_4}{i}\sin 4\lambda + C_5\cos 5\lambda + \ldots \\
&\quad + i\left\{\sin\lambda + \frac{C_2}{i}\cos 2\lambda + C_3\sin 3\lambda + \frac{C_4}{i}\cos 4\lambda + C_5\sin 5\lambda \right. \\
&\quad \left. + \ldots\right\} + N
\end{aligned}
\tag{71}
$$

where the constant N is chosen to make the absolute value of z when $\lambda = 90^\circ$ equal to the absolute value of z when $\lambda = 270^\circ$,

$$N = C_2 - C_4 + C_6 - C_8 + \ldots \tag{72}$$

and N is pure imaginary. The resulting body is symmetric with respect to the y-axis.

After the circulation is fixed to give a desired angle of attack by equation (61), expression (59) for the complex potential $G(\zeta)$ reduces to

$$G(\zeta) = q_\infty\left(\zeta - i\,2R\sin\alpha\log\frac{\zeta}{R} + \frac{R^2}{\zeta}\right) \tag{73}$$

and

$$G'(\zeta) = q_\infty\left(1 - i\,2\sin\alpha - \frac{R}{\zeta}\frac{R^2}{\zeta^2}\right) \tag{74}$$

Then

$$[G'(z)]^2 = A_1 - iA_2\frac{R}{\zeta} - A_3\frac{R^2}{\zeta^2} + iA_2\frac{R^3}{\zeta^3} + A_1\frac{R^4}{\zeta^4} \tag{75}$$

where

$$
\begin{aligned}
A_1 &= q_\infty^2 \\
A_2 &= 4q_\infty^2 \sin\alpha \\
A_3 &= q_\infty^2 (4 \sin^2\alpha + 2)
\end{aligned}
\tag{76}
$$

and

$$
\begin{aligned}
C_{-1} &= -\frac{1}{4} A_1\bar{B}_0 \\
C_0 &= -\frac{1}{4} (A_1\bar{B}_1 - iA_2\bar{B}_0R) \\
C_1 &= \frac{1}{4R} (A_1\bar{B}_2 - iA_2\bar{B}_1R - A_3\bar{B}_0R^2) \\
C_2 &= \frac{1}{4.2R^2} (A_1\bar{B}_3 - iA_2\bar{B}_2R - A_3\bar{B}_1R^2 + iA_2\bar{B}_0R^3) \\
C_3 &= \frac{1}{4.3R^3} (A_1\bar{B}_4 - iA_2\bar{B}_3R - A_3\bar{B}_2R^2 + iA_2\bar{B}_1R^3 + A_1\bar{B}_0R^4) \\
C_4 &= \frac{1}{4.4R^4} (A_1\bar{B}_5 - iA_2\bar{B}_4R - A_3\bar{B}_3R^2 + iA_2\bar{B}_2R^3 + A_1\bar{B}_1R^4) \\
&\vdots \\
C_n &= \frac{1}{4.nR^n} (A_1\bar{B}_{n+1} - iA_2\bar{B}_nR - A_3\bar{B}_{n-1}R^2 + iA_2\bar{B}_{n-2}R^3 + A_1\bar{B}_{n-3}R^4)
\end{aligned}
\tag{77}
$$

Also, since $b_n = 0$, $n > 2$, the relations for B_n as given in equations (51) to (53) become

$$
\begin{aligned}
B_0 &= \frac{1}{b_0} \\
B_1 &= -\frac{1}{b_0} (b_1B_0) \\
B_2 &= -\frac{1}{b_0} (b_2B_0 + b_1B_1) \\
B_3 &= -\frac{1}{b_0} (b_2B_1 + b_1B_2) \\
&\vdots \\
B_n &= -\frac{1}{b_0} (b_2B_{n-2} + b_1B_{n-1}), \quad n > 1
\end{aligned}
\tag{78}
$$

In determinant form,

$$B_n = \frac{1}{b_o^{n+1}} \begin{vmatrix} b_o & 0 & 0 & . & 0 & 0 & 0 & 0 & 0 & 0 & 1 \\ b_1 & b & 0 & . & 0 & 0 & 0 & 0 & 0 & 0 & 0 \\ b_2 & b_1 & b_o & . & 0 & 0 & 0 & 0 & 0 & 0 & 0 \\ 0 & b_2 & b_1 & . & 0 & 0 & 0 & 0 & 0 & 0 & 0 \\ 0 & 0 & b_2 & . & 0 & 0 & 0 & 0 & 0 & 0 & 0 \\ . & . & . & + & . & . & . & . & . & . & . \\ 0 & 0 & 0 & . & 0 & b_2 & b_1 & b_o & 0 & 0 & 0 \\ 0 & 0 & 0 & . & 0 & 0 & b_2 & b_1 & b_o & 0 & 0 \\ 0 & 0 & 0 & . & 0 & 0 & 0 & b_2 & b_1 & b_o & 0 \\ 0 & 0 & 0 & . & 0 & 0 & 0 & 0 & b_2 & b_1 & 0 \end{vmatrix} \tag{79}$$

Also B_n is given by the summation

$$B_n = \sum_{r=0}^{\left[\frac{n}{2}\right]} \frac{(-1)^{n+r}\,(n-r)!}{r!\,(n-2r)!} \frac{b_1^{\,n-2r}\,b_2^{\,r}}{b_o^{\,n-r+1}} \tag{80}$$

Thus, the first few B_n-terms are

$$\left.\begin{aligned} B_o &= \frac{1}{b_o} \\ B_1 &= -\frac{b_1}{b_o^{\,2}} \\ B_2 &= \frac{b_1^{\,2}}{b_o^{\,3}} - \frac{b_2}{b_o^{\,2}} \end{aligned}\right\} \tag{81}$$

The first two C_n-terms as given by equations (76) and (77) are

$$\left.\begin{aligned} C_{-1} &= -\frac{1}{4} A_1 \frac{1}{b_o} \\ C_o &= \frac{A_1\bar{b}_1}{4b_o^2} + i\frac{A_2R}{4b_o} \end{aligned}\right\} \tag{82}$$

Equation (69) is now used to determine b_2:

$$-\frac{b_2}{R} + C_{-1}R = 0$$

$$-\frac{b_2}{R} - \frac{1}{4} A_1 \frac{1}{b_o} = 0$$

$$b_2 = -\frac{A_1R^2}{4b_o} \tag{83}$$

Equation (56) is used to determine b_1:

$$b_1 - C_o = 0$$

$$b_1 - \frac{A_1\bar{b}_1}{4b_o^2} - i\frac{A_2R}{4b_o} = 0$$

$$4b_o^2b_1 - A_1\bar{b}_1 = iA_2b_oR$$

The quantity b_1 must be pure imaginary. Therefore,

$$\bar{b}_1 = -b_1$$

$$4b_o^2b_1 + A_1b_1 = iA_2b_oR$$

$$b_1 = i\frac{A_2b_oR}{4b_o^2 + A_1} \tag{84}$$

If in like manner equation (68) is used to evaluate R, the resulting complicated expression may be reduced to

$$R = \frac{b_0}{1 - M^2 \sin^2 \alpha} \tag{85}$$

It is interesting to note that all odd B_n-terms and all even C_n-terms are pure imaginary, whereas all even B_n-terms and all odd C_n-terms are real; also, that when $\alpha = 0^\circ$, corresponding to a zero angle of attack, $R = b_0$, $b_1 = 0$, and $b_0 + \frac{b_2}{R^2} = 1$.

Equation (42) is used to determine the velocity on the body corresponding to any value of λ. The velocity is limited by the restriction

$$\left|\frac{G'(\zeta)}{f'(\zeta)}\right|^2 < 4 \tag{86}$$

When equation (61) is substituted into equation (60),

$$\begin{aligned} G'(\zeta) &= q_\infty\left(1 - 2i\, R \sin\alpha \frac{1}{\zeta} - \frac{R^2}{\zeta^2}\right) \\ &= q_\infty\left(1 - 2i \sin\alpha\, e^{-i\lambda} - e^{-2i\lambda}\right) \\ &= q_\infty\Big[1 - 2 \sin\alpha \sin\lambda - \cos 2\lambda \\ &\quad + i(-2 \sin\alpha \cos\lambda + \sin 2\lambda)\Big] \end{aligned} \tag{87}$$

Equation (66) can also be rewritten

$$\begin{aligned} f'(\zeta) &= b_0 + \frac{b_1}{R} e^{-i\lambda} + \frac{b_2}{R^2} e^{-2i\lambda} \\ &= b_0 + \frac{b_1}{iR} \sin\lambda + \frac{b_2}{R^2} \cos 2\lambda \\ &\quad + i\left(\frac{b_1}{iR} \cos\lambda - \frac{b_2}{R^2} \sin 2\lambda\right) \end{aligned} \tag{88}$$

The maximum value of $\left|\frac{G'(\zeta)}{f'(\zeta)}\right|$ occurs when $\lambda = 90^\circ$. For this value of λ, $G'(\zeta) = 2q_\infty(1 - \sin\alpha)$ and $f'(\zeta) = b_0 + \frac{b_1}{iR} - \frac{b_2}{R^2}$. Hence, by restriction (86),

$$\frac{2q_\infty(1 - \sin\alpha)}{b_0 + \frac{b_1}{iR} - \frac{b_2}{R^2}} < 2 \tag{89}$$

By substituting from equations (83) and (84)

$$q_\infty(1 - \sin\alpha) < b_0 + \frac{A_2 b_0}{4b_0^2 + A_1} + \frac{A_1}{4b_0} \tag{90}$$

By substituting from equations (63) and (76)

$$\begin{aligned} q_\infty(1 - \sin\alpha) &< \frac{1}{2}\left(\sqrt{1 + q_\infty^2} + 1\right) \\ &+ \frac{2q_\infty^2 \sin\alpha\left(\sqrt{1 + q_\infty^2} + 1\right)}{4\left(\sqrt{1 + q_\infty^2} + 1\right)^2 + q_\infty^2} + \frac{q^2}{2\left(\sqrt{1 + q_\infty^2} + 1\right)} \end{aligned} \tag{91}$$

$$1 - \sin\alpha < \frac{1 + q_\infty^2}{q_\infty} + \frac{q_\infty}{1 + q_\infty^2}\sin\alpha$$

and using equation (29),

$$M_\infty < 1 + M_\infty(1 + M_\infty)\sin\alpha \tag{92}$$

Hence, for a zero angle of attack, M_∞ may vary between 0 and 1. For a given M_∞, however, equation (92) limits the permissible angle of attack.

COMPARISON WITH TSIEN METHOD

The equation derived by Tsien, reference 5, in the notation of the present paper, is

$$z = \zeta - \frac{1}{4}\int \sqrt{[G'(\zeta)]^2 \, d\zeta} \tag{93}$$

Thus it is seen that Tsien's equation is a special case of that used in the present report where

$$f(\zeta) = \zeta$$

Tsien's equation alters the velocity of the flow at infinity, or the free-stream velocity, but this is relatively unimportant since the amount of the change is readily determined. However, since Tsien's equation has no b_1 term, it cannot be used to study flows with circulation. In Tsien's equation Γ is therefore zero and G is

$$G(\zeta) = q_\infty\left(\zeta + \frac{R^2}{\zeta}\right) \tag{94}$$

Then,

$$G'(\zeta) = q_\infty\left(1 - \frac{R^2}{\zeta^2}\right)$$

$$[G'(\zeta)]^2 = q_\infty^2\left(1 - \frac{2R^2}{\zeta^2} + \frac{R^4}{\zeta^4}\right)$$

and

$$z = \zeta - \frac{1}{4}q_\infty^2\,\bar{\zeta} - \frac{q_\infty^2 R^2}{2\bar{\zeta}} + \frac{q_\infty^2 R^4}{12\bar{\zeta}^3}$$

$$= Re^{i\lambda} - \frac{1}{4}q_\infty^2 Re^{-i\lambda} - \frac{1}{2}q_\infty^2\, Re^{i\lambda} + \frac{1}{12}q_\infty^2 Re^{i3\lambda}$$

In order to have Tsien's equation give as nearly circular a body as possible, let

$$R - \frac{1}{2}q_\infty^2 R = 1 \tag{95}$$

Then,

$$z = e^{i\lambda} - \frac{1}{4} q_\infty^2 R e^{-i\lambda} + \frac{1}{12} q_\infty^2 R e^{i3\lambda}$$

$$= \left(1 - \frac{1}{4} q_\infty^2 R\right) \cos \lambda + \frac{1}{12} q_\infty^2 R \cos 3\lambda$$

$$+ i \left[\left(1 + \frac{1}{4} q_\infty^2 R\right) \sin \lambda + \frac{1}{12} q^2 R \sin 3\lambda\right] \qquad (96)$$

Syracuse University,
Syracuse, New York, July 1, 1945.

REFERENCES

1. Gelbart, Abe: On Subsonic Compressible Flows by a Method of Correspondence. I – Methods for Obtaining Subsonic Circulatory Compressible Flows about Two-Dimensional Bodies. NACA TN No. 1170, 1947.

2. Bers, Lipman, and Gelbart, Abe: On a Class of Differential Equations in Mechanics of Continua. Quarterly of Appl. Math., vol. 1, July 1943, pp. 168-188.

3. Bers, Lipman, and Gelbart, Abe: On a Class of Functions Defined by Partial Differential Equations. Trans. Am. Math. Soc., vol. 56, no. 1, July 1944, pp. 67-93.

4. Chaplygin, S. A.: On Gas Jets. Scientific Memoirs, Moscow Univ., Math. Phys. Sec., vol. 21, 1902, pp. 1-121. (Eng. trans., pub. by Brown Univ., 1944.)(Also NACA TM No. 1063, 1944)

5. Tsien, Hsue-Shen: Two-Dimensional Subsonic Flow of Compressible Fluids. Jour. Aero. Sci., vol. 6, no. 10, Aug. 1939, pp. 399-407.

6. Tamada, Ko: Application of the Hodograph Method to the Flow of a Compressible Fluid past a Circular Cylinder. Proc. Physico-Math. Soc. of Japan, vol. 22, ser. 3, 1940, pp. 208-219.

7. von Kármán, Th.: Compressibility Effects in Aerodynamics. Jour. Aero. Sci., vol. 8, no. 9, July 1941, pp. 337-356.

8. Gelbart, Abe: On a Function-Theory Method for Obtaining Potential-Flow Patterns of a Compressible Fluid. NACA ARR No. 3G27, 1943.

9. Kaplan, C.: The Flow of a Compressible Fluid past a Curved Surface. NACA ARR No. 3K02, 1943.

10. Bers, Lipman: On a Method of Constructing Two-Dimensional Subsonic Compressible Flows around Closed Profiles. NACA TN No. 969, 1945.

11. Bers, Lipman: On the Circulatory Subsonic Flow of a Compressible Fluid past a Circular Cylinder. NACA TN No. 970, 1945.

TABLE I.– CONSTANTS OF THE TRANSFORMATION FUNCTION FOR VARIOUS MACH NUMBERS [$\alpha = -20^\circ$]

M_∞	0.1	0.2	0.3	0.4	0.5	0.6
q_∞	0.100504	0.204124	0.314486	0.436436	0.577351	0.750000
b_0	1.002521	1.010309	1.024144	1.045546	1.077352	1.125000
b_1	-i(0.003450)	-i(0.014173)	-i(0.033399)	-i(0.063618)	-i(0.109575)	-i(0.180760)
b_2	-0.002538	- .010623	.025864	.051706	.095270	.172420
R	1.003695	1.015059	1.035041	1.065488	1.109807	1.174459
C_2	-i(0.0017)	-i(0.0069)	-i(0.0157)	-i(0.0283)	-i(0.0458)	-i(0.0722)
C_3	0.0008	0.0037	0.0078	0.0137	0.0212	0.0308
C_4		i(0.0003)	i(0.0002)	i(0.0005)	-i(0.0031)	-i(0.0067)
C_5				-0.0001	0.0007	0.0016
C_6					-i(0.0002)	i(0.0006)
C_7						-0.0007
N	-i(0.0017)	-i(0.0072)	-i(0.0159)	-i(0.0288)	-i(0.0429)	-i(0.0655)

TABLE II.– CONSTANTS OF THE TRANSFORMATION FUNCTION FOR VARIOUS ANGLES OF ATTACK [$M_\infty = 0.3$]

α	0°	-10°	-20°
q_∞	0.314486	0.314486	0.314486
b_0	1.024144	1.024144	1.024144
b_1	0.0000	i(0.016824)	-i(0.033399)
b_2	-0.025322	-0.025460	-0.025864
R	1.024144	1.026931	1.035041
C_2	0.0000	i(0.0080)	-i(0.0157)
C_3	0.0069	0.0078	0.0078
C_4	0.0000	i(0.0002)	i(0.0002)
C_5	0.0001	0.0001	
N	0.0000	i(0.0078)	-i(0.0159)

TABLE III.– CONSTANTS OF THE TRANSFORMATION FUNCTION FOR VARIOUS ANGLES OF ATTACK $[M_\infty = 0.7]$

α	0°	-5°	-10°
a_{0*}	0.980196	0.980196	0.980196
b_0	1.200140	1.200140	1.200140
b_1	0.0000	-i(0.072041)	-i(0.145138)
b_2	-0.288269	-0.290427	-0.296980
R	1.200140	1.204624	1.218138
c_2	0.0000	-i(0.0249)	-i(0.0496)
c_3	0.0556	0.0548	0.0523
c_4	0.0000	-i(0.0041)	-i(0.0080)
c_5	0.0056	0.0053	0.0046
c_6	0.0000	-i(0.0007)	-i(0.0013)
c_7	0.0007	0.0006	0.0004
c_8	0.0000	-i(0.0001)	-i(0.0002)
c_9	0.0001		
I	0.0000	-i(0.0214)	-i(0.00427)

TABLE IV.– DISTORTION OF PROFILE FROM CIRCLE $[M_\infty = 0.1;\ \alpha = -20^\circ]$

λ	x	y	$\lvert z \rvert$	arg z
-90°	0.0000	-0.9992	0.9992	-90.0°
-75°	0.2574	-0.9656	0.9993	-75.1°
-60°	0.4977	-0.8668	0.9995	-60.1°
-45°	0.7048	-0.7080	0.9990	-45.1°
-30°	0.8645	-0.5017	0.9995	-30.1°
-15°	0.9656	-0.2610	1.0002	-15.1°
0°	1.0008	-0.0034	1.0008	-0.2°
15°	0.9674	0.2562	1.0007	14.8°
30°	0.8675	0.4982	1.0004	29.9°
45°	0.7082	0.7060	1.0000	45.0°
60°	0.5007	0.8652	0.9996	59.9°
75°	0.2591	0.9651	0.9993	75.0°
90°	0.0000	0.9992	0.9992	90.0°

TABLE V.– DISTORTION OF PROFILE FROM CIRCLE
$[M_\infty = 0.2;\ \alpha = -20^\circ]$

λ	x	y	$\lvert z \rvert$	arg z
-90°	0.0000	-0.9963	0.9963	-90.0°
-75°	0.2524	-0.9643	0.9968	-75.3°
-60°	0.4900	-0.8699	0.9984	-60.6°
-45°	0.6976	-0.7172	1.0005	-45.8°
-30°	0.8603	-0.5146	1.0024	-30.9°
-15°	0.9653	-0.2744	1.0035	-15.9°
0°	1.0037	-0.0138	1.0038	- 0.8°
15°	0.9717	0.2484	1.0029	14.3°
30°	0.8717	0.4928	1.0013	29.5°
45°	0.7114	0.7022	0.9996	44.6°
60°	0.5026	0.8621	0.9979	59.8°
75°	0.2600	0.9623	0.9968	74.9°
90°	0.0000	0.9963	0.9963	90.0°

TABLE VI.– VELOCITY DISTRIBUTION ON PROFILE $[M_\infty = 0.3;\ \alpha = 0^\circ]$

λ	x	y	$\lvert z \rvert$	arg z	q	M
-90°	0.0000	-0.9932	0.9932	-90.0°	0.6595	0.5505
-75°	0.2540	-0.9610	0.9940	-75.2°	0.6241	0.5494
-60°	0.4932	-0.8659	0.9965	-60.3°	0.5646	0.4916
-45°	0.7021	-0.7119	0.9998	-45.4°	0.4557	0.4146
-30°	0.8659	-0.5070	1.0034	-30.3°	0.3183	0.3033
-15°	0.9708	-0.2638	1.0060	-15.8°	0.1633	0.1612
0°	1.0070	-0.0000	1.0070	0.0°	0.0000	0.0000
15°	0.9708	0.2638	1.0060	15.8°	0.1633	0.1612
30°	0.8659	0.5070	1.0034	30.3°	0.3183	0.3033
45°	0.7021	0.7119	0.9998	45.4°	0.4557	0.4146
60°	0.4932	0.8659	0.9965	60.3°	0.5646	0.4916
75°	0.2540	0.9610	0.9940	75.2°	0.6241	0.5294
90°	0.0000	0.9932	0.9932	90.0°	0.6595	0.5505

TABLE VII.– VELOCITY DISTRIBUTION ON PROFILE $[M_\infty = 0.3;\ \alpha = -10^\circ]$

λ	x	y	$\lvert z \rvert$	arg z	q	M
-90°	0.0000	-0.9923	0.9923	-90.0°	0.5192	0.4606
-75°	0.2467	-0.9614	0.9925	-75.6°	0.4972	0.4452
-60°	0.4856	-0.8696	0.9960	-60.8°	0.4331	0.3974
-45°	0.6935	-0.7282	0.9998	-46.1°	0.3326	0.3156
-30°	0.8588	-0.5196	1.0037	-31.2°	0.2031	0.1990
-15°	0.9672	-0.2792	1.0067	-16.1°	0.0539	0.0538
0°	1.0079	-0.0160	1.0080	-0.9°	0.1094	0.1087
15°	0.9756	0.2496	1.0070	14.3°	0.2773	0.2672
30°	0.8730	0.4962	1.0041	29.6°	0.4417	0.4040
45°	0.7095	0.7049	1.0001	44.8°	0.5913	0.5090
60°	0.4990	0.8622	0.9962	59.9°	0.7072	0.5774
75°	0.2572	0.9594	0.9933	75.0°	0.7926	0.6212
90°	0.0000	0.9923	0.9923	90.0°	0.8204	0.6342

TABLE VIII.– VELOCITY DISTRIBUTION ON PROFILE $[M_\infty = 0.3;\ \alpha = -20^\circ]$

λ	x	y	$\lvert z \rvert$	arg z	q	M
-90°	0.0000	-0.9922	0.9922	-90.0°	0.3976	0.3694
-75°	0.2452	-0.9626	0.9933	-75.7°	0.3771	0.3529
-60°	0.4784	-0.8741	0.9964	-61.3°	0.3173	0.3024
-45°	0.6859	-0.7287	1.0007	-46.7°	0.2218	0.2165
-30°	0.8526	-0.5317	1.0048	-31.9°	0.0966	0.0962
-15°	0.9637	-0.2937	1.0075	-17.0°	0.0510	0.0509
0°	1.0078	-0.0314	1.0083	-1.8°	0.2179	0.2129
15°	0.9791	0.2349	1.0069	13.5°	0.4045	0.3750
30°	0.8794	0.4839	1.0037	28.8°	0.5724	0.4968
45°	0.7173	0.6965	0.9998	44.2°	0.7393	0.5945
60°	0.5060	0.8579	0.9960	59.5°	0.8785	0.6600
75°	0.2614	0.9582	0.9932	74.7°	0.9714	0.6968
90°	0.0000	0.9922	0.9922	90.0°	1.0041	0.7086

TABLE IX.– DISTORTION OF PROFILE FROM CIRCLE
$[M_\infty = 0.4;\ \alpha = -20^\circ]$

λ	x	y	$\lvert z \rvert$	arg z
-90°	0.0000	-0.9862	0.9862	-90.0°
-75°	0.2344	-0.9602	0.9884	-76.3°
-60°	0.4613	-0.8810	0.9945	-62.4°
-45°	0.6692	-0.7462	1.0023	-48.1°
-30°	0.8420	-0.5569	1.0095	-33.5°
-15°	0.9618	-0.3214	1.0141	-18.5°
0°	1.0136	-0.0566	1.0152	- 3.2°
15°	0.9894	0.2154	1.0126	12.3°
30°	0.8902	0.4703	1.0068	27.8°
45°	0.7258	0.6876	0.9998	43.5°
60°	0.5111	0.8512	0.9929	59.0°
75°	0.2636	0.9522	0.9880	74.5°
90°	0.0000	0.9862	0.9862	90.0°

TABLE X.– VELOCITY DISTRIBUTION ON PROFILE $[M_\infty = 0.5;\ \alpha = -20^\circ]$

λ	x	y	$\lvert z \rvert$	arg z	q	$\mathcal{M}$
-90°	0.0000	-0.9795	0.9795	-90.0°	0.7670	0.6086
-75°	0.2241	-0.9559	0.9818	-76.8°	0.6578	0.5495
-60°	0.4368	-0.8840	0.9861	-63.7°	0.5361	0.4725
-45°	0.6459	-0.7614	0.9984	-49.7°	0.3771	0.3529
-30°	0.8229	-0.5856	1.0100	-35.4°	0.1673	0.1650
-15°	0.9553	-0.3587	1.0204	-20.6°	0.0919	0.0915
0°	1.0219	-0.0920	1.0260	- 5.1°	0.4089	0.3785
15°	1.0069	0.1903	1.0247	10.7°	0.8025	0.6259
30°	0.9077	0.4576	1.0165	26.8°	1.2953	0.7916
45°	0.7372	0.6819	1.0042	42.8°	1.8824	0.8831
60°	0.5162	0.8468	0.9917	58.6°	2.5278	0.9299
75°	0.2649	0.9463	0.9827	74.4°	3.0256	0.9495
90°	0.0000	0.9795	0.9795	90.0°	3.2503	0.9558

TABLE XI.- DISTORTION OF PROFILE FROM CIRCLE
$[M_\infty = 0.6;\ \alpha = -20^\circ]$

λ	x	y	$\lvert z \rvert$	arg z
-90°	0.0000	-0.9715	0.9715	-90.0°
-75°	0.2095	-0.9501	0.9729	-77.6°
-60°	0.4129	-0.8888	0.9801	-65.1°
-45°	0.6109	-0.7865	0.9959	-52.2°
-30°	0.7997	-0.6302	1.0182	-38.2°
-15°	0.9470	-0.4122	1.0328	-23.5°
0°	1.0317	-0.1432	1.0416	- 7.9°
15°	1.0296	0.1506	1.0406	8.3°
30°	0.9335	0.4338	1.0294	24.9°
45°	0.7565	0.6701	1.0106	41.5°
60°	0.5263	0.8392	0.9906	57.9°
75°	0.2689	0.9385	0.9763	74.0°
90°	0.0000	0.9715	0.9715	90.0°

TABLE XII.- VELOCITY DISTRIBUTION ON PROFILE $[M_\infty = 0.7;\ \alpha = 0^\circ]$

λ	x	y	$\lvert z \rvert$	arg z	q	M
-90°	0.0000	-0.9494	0.9494	-90.0°	2.7456	0.9429
-75°	0.2243	-0.9281	0.9584	-76.4°	2.6081	0.9337
-60°	0.4475	-0.8618	0.9711	-62.6°	2.2270	0.9121
-45°	0.6644	-0.7420	0.9960	-48.2°	1.6867	0.8602
-30°	0.8606	-0.5579	1.0256	-33.0°	1.0916	0.7374
-15°	1.0063	-0.3043	1.0513	-16.8°	0.5127	0.4562
0°	1.0620	0.0000	1.0620	0.0°	0.0000	0.0000
15°	1.0063	0.3043	1.0513	16.8°	0.5127	0.4562
30°	0.8606	0.5579	1.0256	33.0°	1.0916	0.7374
45°	0.6644	0.7420	0.9960	48.2°	1.6867	0.8602
60°	0.4475	0.8618	0.9711	62.6°	2.2270	0.9121
75°	0.2243	0.9281	0.9584	76.4°	2.6081	0.9337
90°	0.0000	0.9494	9.9494	90.0°	2.7456	0.9429

TABLE XIII.– DISTORTION OF PROFILE FROM CIRCLE
[$M_\infty = 0.7$; $\alpha = -5^\circ$]

λ	x	y	$\lvert z \rvert$	arg z
-90°	0.0000	-0.9499	0.9499	-90.0°
-75°	0.2151	-0.9306	0.9551	-77.0°
-60°	0.4301	-0.8693	0.9699	-63.7°
-45°	0.6409	-0.7591	0.9935	-49.8°
-30°	0.8358	-0.5882	1.0220	-35.1°
-15°	0.9897	-0.3482	1.0491	-19.4°
0°	1.0607	-0.0512	1.0619	- 2.8°
15°	1.0227	0.2582	1.0586	14.2°
30°	0.8860	0.5262	1.0300	30.7°
45°	0.6893	0.7243	0.9998	46.4°
60°	0.4663	0.8545	0.9732	61.4°
75°	0.2341	0.9270	0.9561	75.8°
90°	0.0000	0.9499	0.9499	90.0°

TABLE XIV.– VELOCITY DISTRIBUTION ON PROFILE [$M_\infty = 0.7$; $\alpha = -10^\circ$]

λ	x	y	$\lvert z \rvert$	arg z	q	M
-90°	0.0000	-0.9519	0.9519	-90.0°	1.4897	0.8286
-75°	0.2069	-0.9338	0.9565	-77.5°	1.4243	0.8184
-60°	0.4140	-0.8774	0.9702	-64.7°	1.2356	0.7773
-45°	0.6188	-0.7754	0.9921	-51.4°	0.9444	0.6866
-30°	0.8119	-0.6165	1.0195	-37.2°	0.5784	0.5007
-15°	0.9708	-0.3902	1.0463	-21.9°	0.1558	0.1539
0°	1.0573	-0.1018	1.0622	- 5.5°	0.3480	0.3287
15°	1.0373	0.2110	1.0585	11.5°	1.0393	0.7206
30°	0.9115	0.4923	1.0360	28.4°	2.1140	0.9040
45°	0.7154	0.7056	1.0048	44.6°	3.7732	0.9666
60°	0.4864	0.8472	0.9769	60.1°	6.0137	0.9865
75°	0.2447	0.9266	0.9584	75.2°	8.2639	0.9928
90°	0.0000	0.9519	0.9519	90.0°	9.7921	0.9948

TABLE XV.– DISTORTION OF PROFILE FROM CIRCLE BY TSIEN'S METHOD $[M_\infty = 0.7]$

λ	x	y	$\lvert z \rvert$	arg z
-90°	0.0000	-1.1541	1.1541	-90.0°
-75°	0.1445	-1.1347	1.1439	-82.7°
-60°	0.3075	-1.0661	1.1097	-73.9°
-45°	0.4892	-0.9250	1.0464	-62.1°
-30°	0.6659	-0.6926	0.9608	-46.1°
-15°	0.7971	-0.3731	0.8801	-25.1°
0°	0.8459	0.0000	0.8459	0.0°
15°	0.7971	0.3731	0.8801	25.1°
30°	0.6659	0.6926	0.9608	46.1°
45°	0.4892	0.9250	1.0464	62.1°
60°	0.3075	1.0661	1.1097	73.9°
75°	0.1445	1.1347	1.1439	82.7°
90°	0.0000	1.1541	1.1541	90.0°

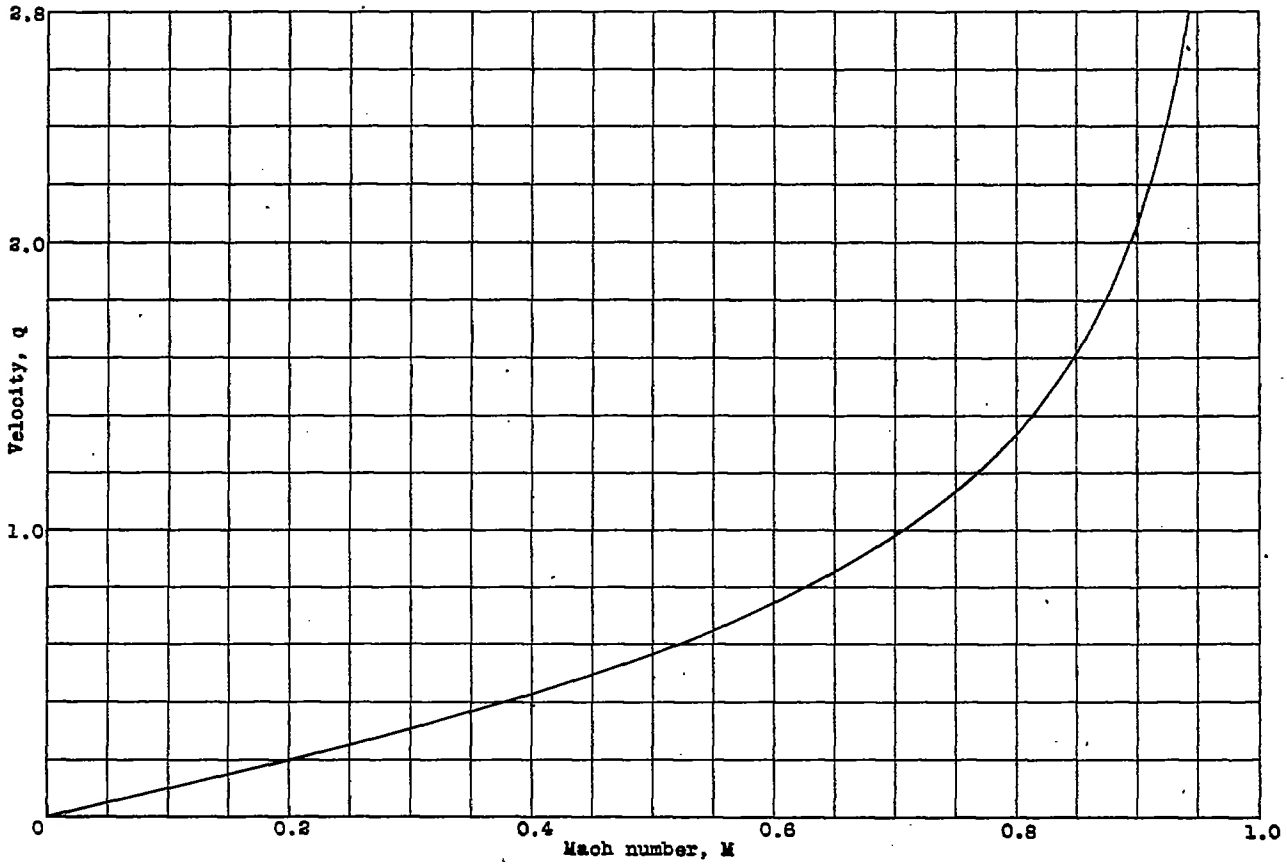

Figure 1.- Variation of velocity with Mach number.

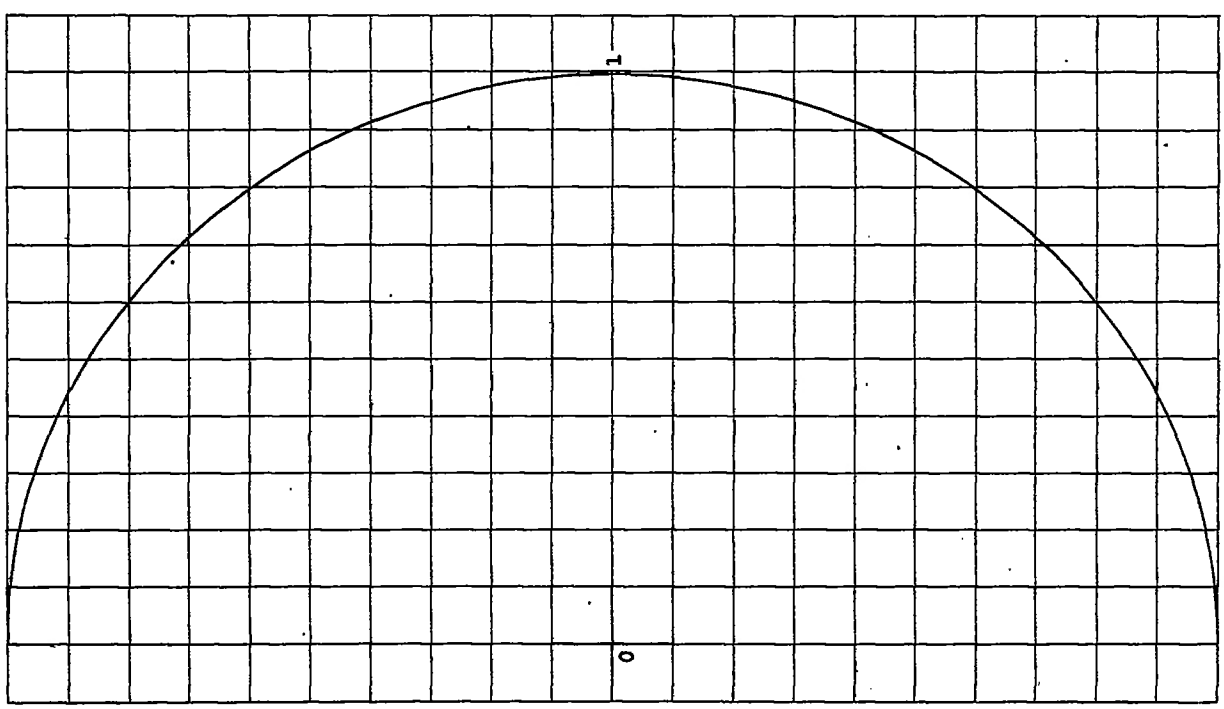

Figure 2.- Shape of profile. $M_\infty = 0.1$; $\alpha = -30°$.

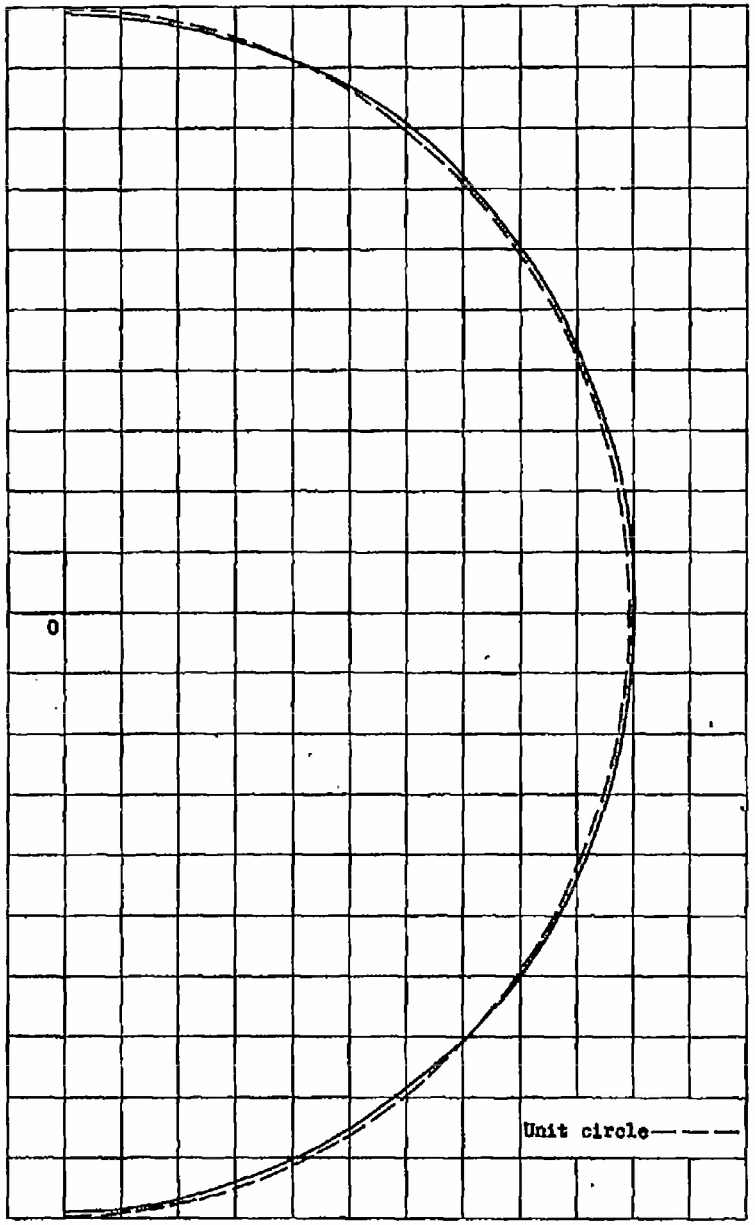

Figure 3.- Shape of profile. $M_\infty = 0.3$; $\alpha = -20°$.

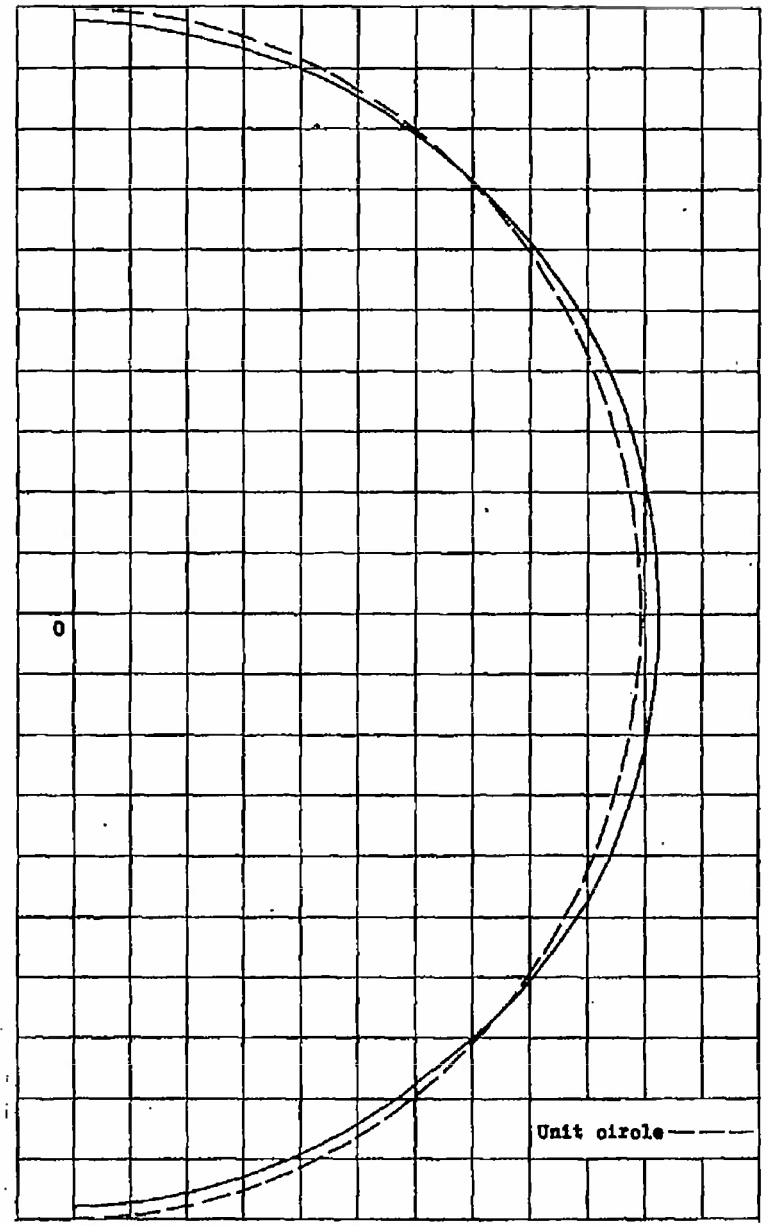

Figure 4.- Shape of profile. $M_\infty = 0.5$; $\alpha = -20°$.

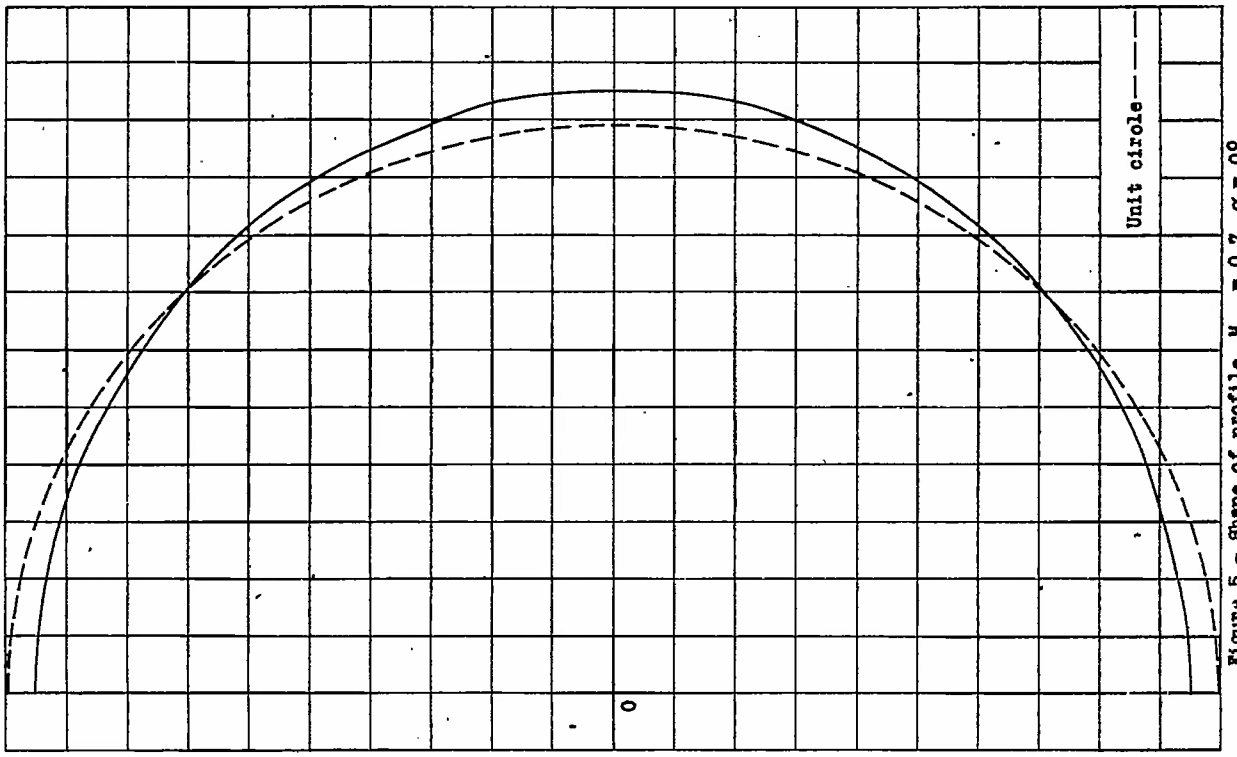

Figure 5.- Shape of profile. $M_\infty = 0.7$, $\alpha = 0^\circ$.

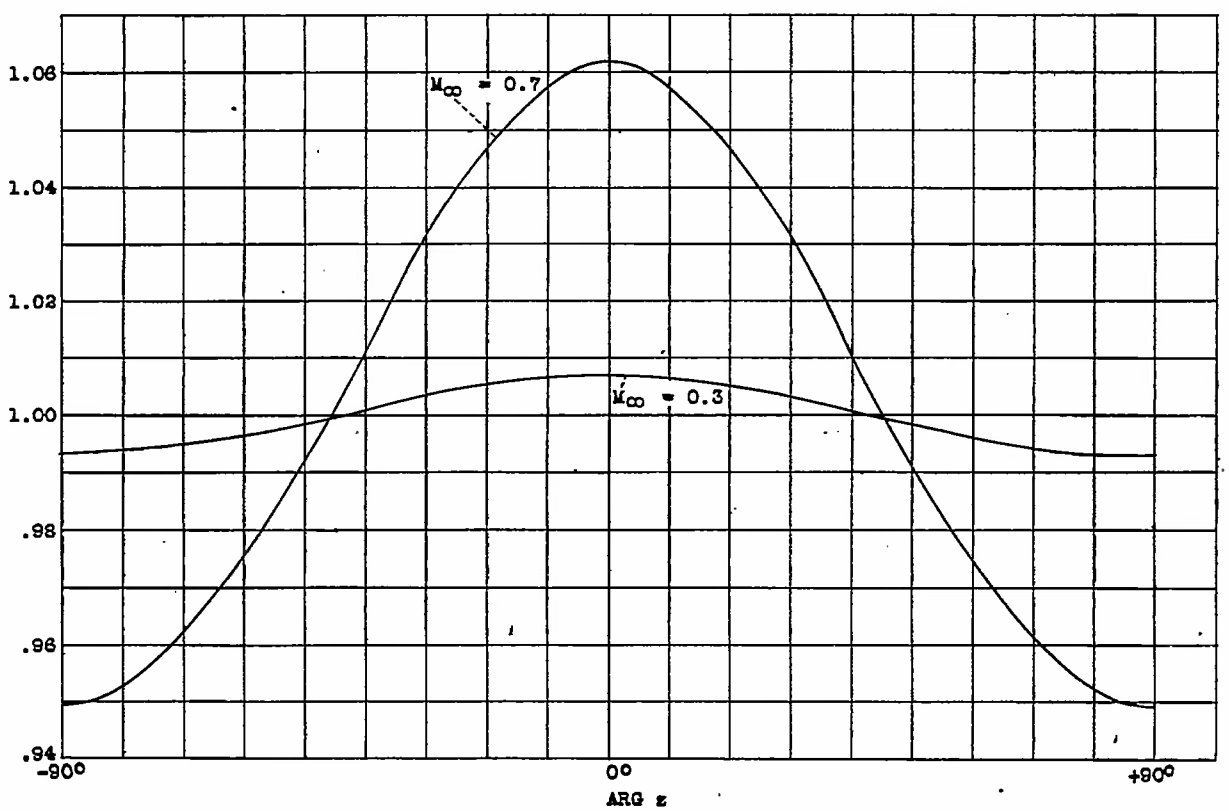

Figure 6.- Absolute value of z as a function of the argument of z. $\alpha = 0^\circ$.

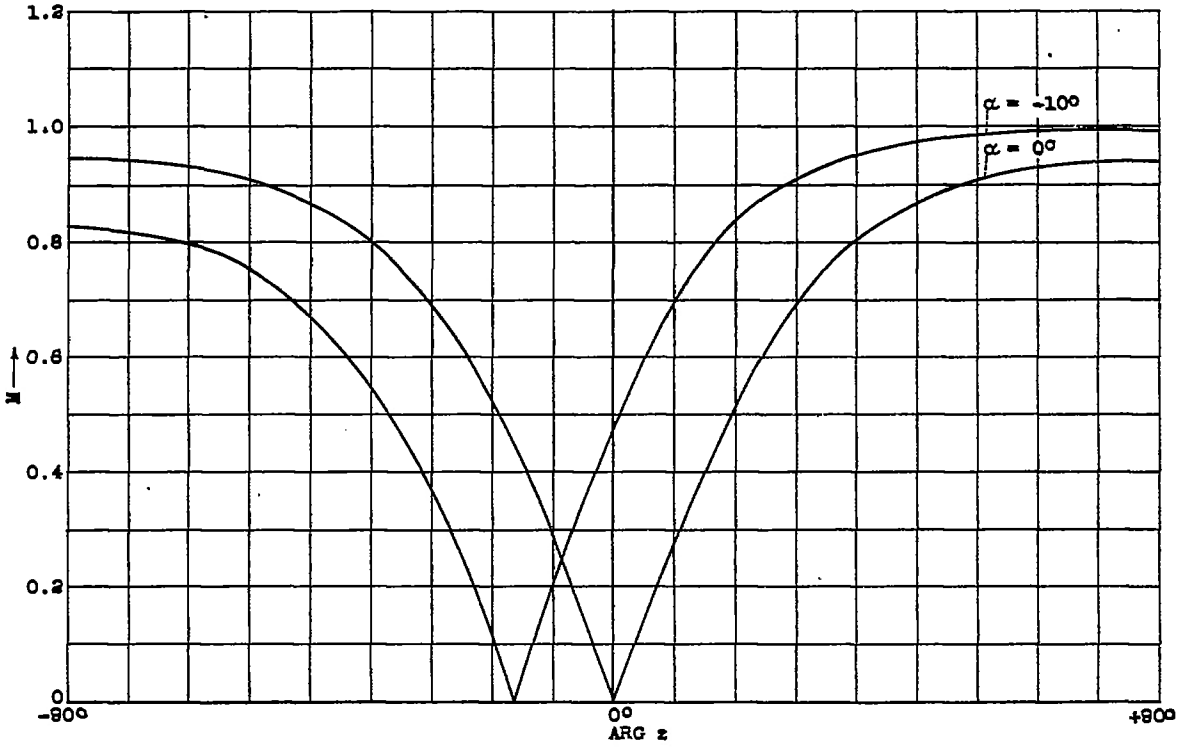

Figure 7.- Mach number as a function of the argument z. $M_\infty = 0.7$.

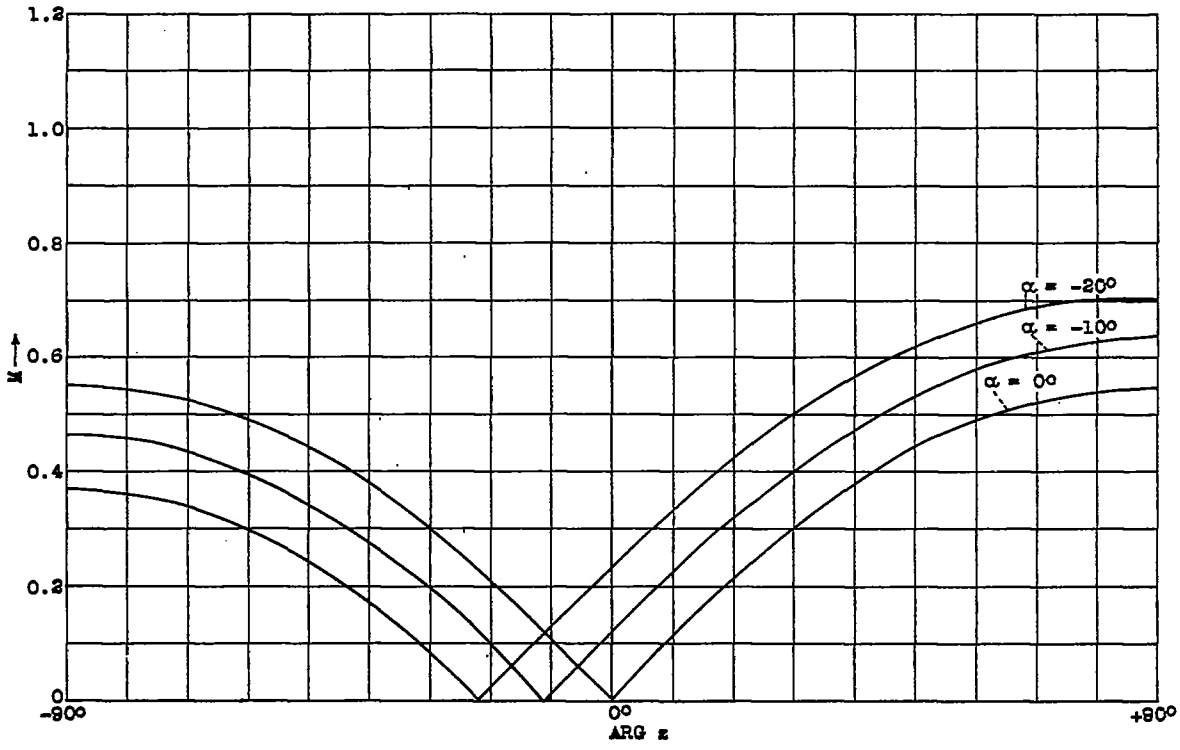

Figure 8 .- Mach number as a function of the argument z. $M_\infty = 0.3$.

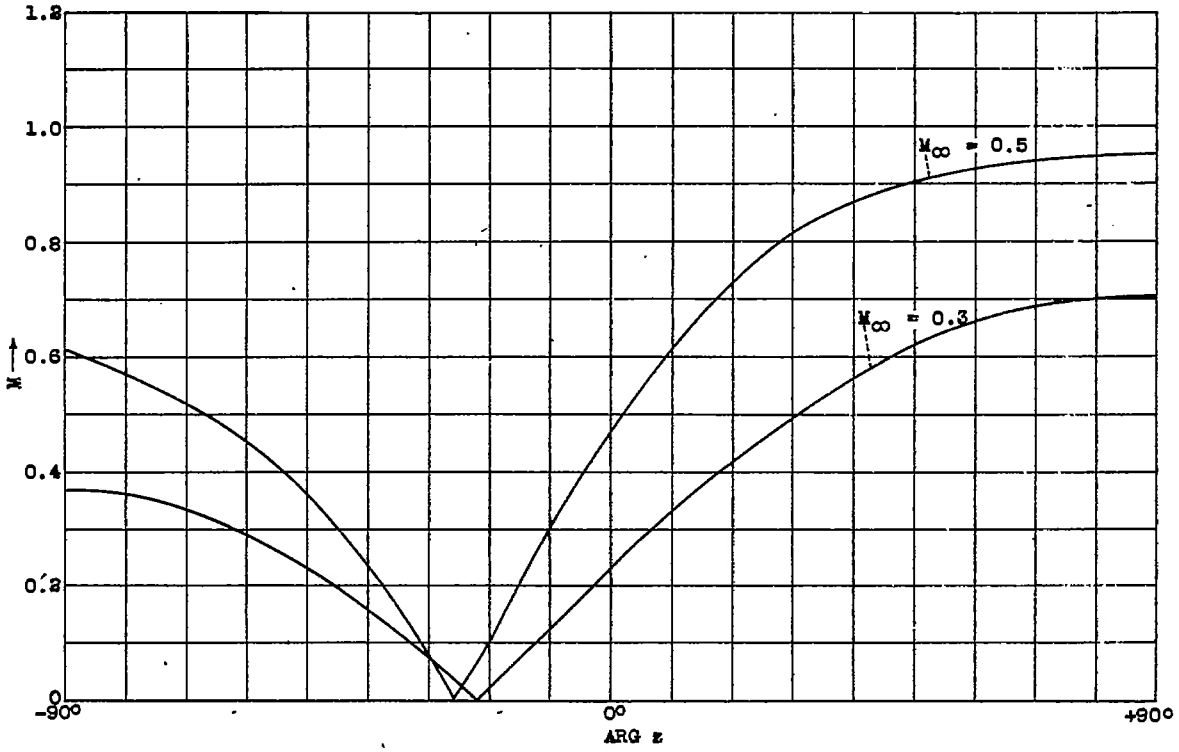

Figure 9.- Mach number as a function of the argument z. $\alpha = -20°$.

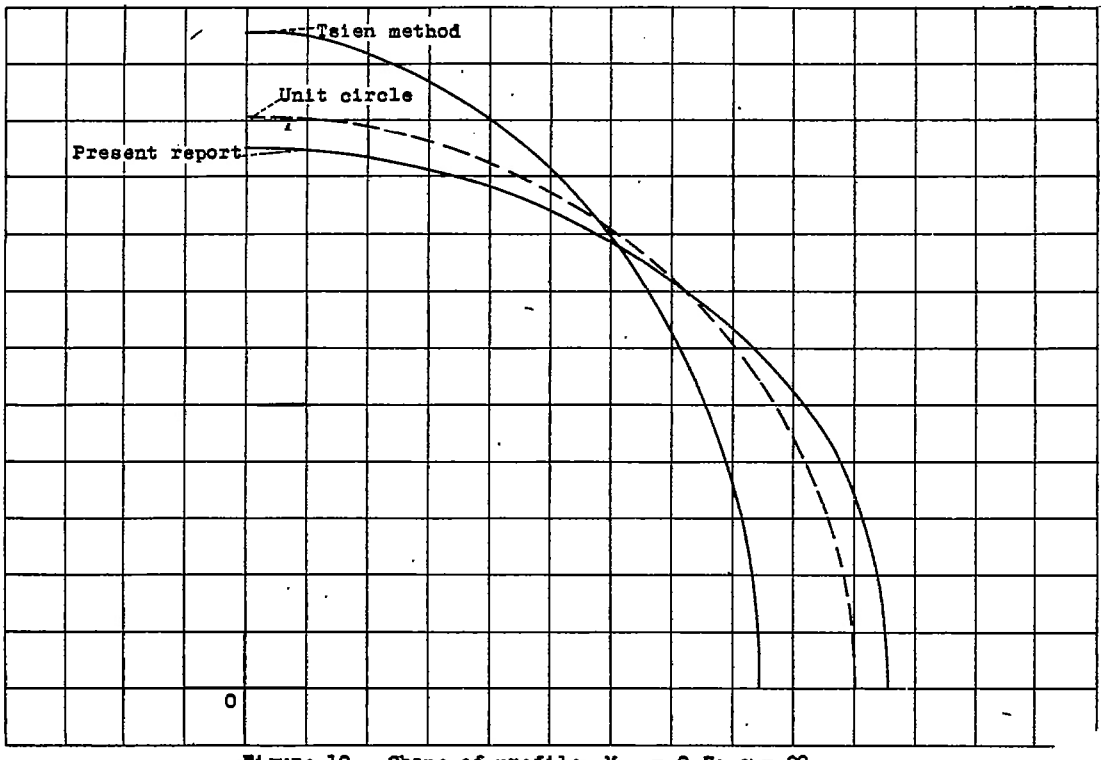

Figure 10.- Shape of profile. $M_\infty = 0.7$; $\alpha = 0°$.

TSDIC FORM 60 (19 MAR 47)

Bartnoff, S.
Gelbart, Abe

AUTHOR(S)

DIVISION: Aerodynamics (2)
SECTION: Fluid Mechanics and Aerodynamic Theory (9)
CROSS REFERENCES: Flow, Air - Theory (39200); Flow around bodies (40450)

ATI- 8637

ORIG. AGENCY NUMBER
TN-1171

REVISION

AMER. TITLE: On subsonic compressible flows by a method of correspondence - II - Application of methods to studies of flow with circulation about a circular cylinder

FORG'N. TITLE:

U

ORIGINATING AGENCY: National Advisory Committee for Aeronautics, Washington, D. C.

TRANSLATION:

COUNTRY	LANGUAGE	FORG'N.CLASS	U. S.CLASS.	DATE	PAGES	ILLUS.	FEATURES
U.S.	Eng.		Unclass.	Apr'47	39	25	tables, graphs

ABSTRACT

General method for studying flow of compressible fluid around closed body is discussed. Application is made to a specific case in which linearized equation of state is used. For a given incompressible flow around specific profile, a corresponding compressible flow is found. Flow at infinity remains the same. Detailed studies are made of flow with circulation around unit circle, and velocity distributions are found for wide range of Mach number and angle of attack. Comparisons are made with other methods.

NOTE: Requests for copies of this report must be addressed to: N.A.C.A., Washington, D. C.

240400

T-2, HQ., AIR MATERIEL COMMAND

AD-B805 896

P 1/1, P 20/4

FL 23

* Subsonic flow
Compressible flow
Aerodynamics