UNCLASSIFIED

AD NUMBER	
ADB805715	
CLASSIFICATION CHANGES	
TO:	**unclassified**
FROM:	**restricted**
LIMITATION CHANGES	
TO: **Approved for public release; distribution is unlimited.**	
FROM: **Distribution authorized to DoD only; Administrative/Operational Use; 03 FEB 1947. Other requests shall be referred to National Aeronautics and Space Administration, Washington, DC. Pre-dates formal DoD distribution statements. Treat as DoD only.**	
AUTHORITY	
NACA technical publications index dtd 31 Dec 1947; NASA TR Server website	

THIS PAGE IS UNCLASSIFIED

RESTRICTED

COPY NO. 4
RM No. E7B03

NACA
CLASSIFICATION CHANGED
MAR 17 1947

RESEARCH MEMORANDUM

COMPUTED PERFORMANCE OF A COMPOSITE ENGINE BASED ON EXPERIMENTAL DATA FOR A SINGLE-CYLINDER CONVENTIONAL AIRCRAFT ENGINE CONVERTED TO COMPRESSION-IGNITION OPERATION

By J. Arnold McCoy and Frank Szel

Aircraft Engine Research Laboratory
Cleveland, Ohio

CLASSIFIED DOCUMENT

This document contains classified information affecting the National Defense of the United States within the meaning of the Espionage Act, USC 50:31 and 32. Its transmission or the revelation of its contents in any manner to an unauthorized person is prohibited by law. Information so classified may be imparted only to persons in the military and naval Services of the United States, appropriate civilian officers and employees of the Federal Government who have a legitimate interest therein, and to United States citizens of known loyalty and discretion who of necessity must be informed thereof.

NATIONAL ADVISORY COMMITTEE FOR AERONAUTICS

WASHINGTON

February 3, 1947

NACA LIBRARY
LANGLEY MEMORIAL AERONAUTICAL LABORATORY
Langley Field, Va.

RESTRICTED

NASA Technical Library
3 1176 01435 0475

NATIONAL ADVISORY COMMITTEE FOR AERONAUTICS

RESEARCH MEMORANDUM

COMPUTED PERFORMANCE OF A COMPOSITE ENGINE BASED ON EXPERIMENTAL DATA FOR A SINGLE-CYLINDER CONVENTIONAL AIRCRAFT ENGINE CONVERTED TO COMPRESSION-IGNITION OPERATION

By J. Arnold McCoy and Frank Szel

SUMMARY

The performance of a single-cylinder spark-ignition engine modified to operate on a compression-ignition cycle with a compression ratio of 8.0 was determined. Experimental data were obtained at an inlet-manifold pressure of 100 inches of mercury absolute, fuel-air ratios of 0.040 and 0.025, and engine exhaust pressures of 30 to 100 inches of mercury absolute. These data were then used to compute the sea-level performance of an engine having nine cylinders with a compressor and a turbine mounted on a common shaft and geared to the engine crankshaft. An engine speed of 1600 rpm was used throughout this investigation because a preliminary investigation showed that the power output and combustion-air flow increased very slowly with engine speeds above 1600 rpm.

The calculations for the full-scale composite engine at a fuel-air ratio of 0.040 and compressor and turbine efficiencies of 85 percent indicated that maximum power occurred at an engine exhaust pressure of 75 inches of mercury absolute. At this condition, the net brake horsepower was 1060 and the net brake mean effective pressure and the net brake specific fuel consumption were 288 pounds per square inch an 0.405 pound per net brake horsepower-hour, respectively. The minimum net brake specific fuel consumption occurred at an engine exhaust pressure of 100 inches of mercury absolute. At this condition, the net brake specific fuel consumption was 0.385 pound per net brake horsepower-hour for a net brake horsepower and net brake mean effective pressure of 1010 and 274 pounds per square inch, respectively.

A reduction of the fuel-air ratio from 0.040 to 0.025 caused a 26-percent reduction in maximum net brake horsepower with a 9-percent decrease in the net brake specific fuel consumption.

[redacted]

INTRODUCTION

Considerable research has been conducted on the combination of a spark-ignition engine with a turbine and a compressor geared to the crankshaft to increase the power and efficiency of the power plant. Computations based on engine tests (reference 1) show that the maximum performance was obtained by operating at high inlet-manifold and exhaust pressures. A spark-ignition engine must be operated with rich mixtures at high inlet-manifold pressures in order to avoid detonation; therefore, relatively high specific fuel consumptions are obtained. A compression-ignition engine, however, may be operated with leaner mixtures.

Computations based on experimental data from a high-speed single-cylinder compression-ignition engine (reference 2) showed that at a fuel-air ratio of 0.067 the exhaust energy available at sea level with the exhaust pressure equal to the inlet-manifold pressure (for the pressure range of 30 to 90 in. Hg absolute) exceeded that required for supercharger work.

Reference 3 is based on the experimental data of reference 2. The engine performance was extrapolated to engine exhaust pressures that were twice the inlet-manifold pressure and computations were made which showed that the net brake horsepower of the composite system increased with decreasing compression ratio and increasing fuel-air ratio and engine speed. The net brake specific fuel consumption was found to be near its minimum value at a compression ratio of 17 and a fuel-air ratio of 0.035.

Another theoretical analysis (reference 4) indicated that high net brake horsepowers at low net brake specific fuel consumptions might be obtained on a composite engine comprising a compression-ignition engine at a compression ratio of 8.5 and a compressor and a turbine geared to the engine crankshaft.

The present investigation was made at the NACA Cleveland laboratory on a single-cylinder engine using a cylinder from a radial air-cooled aircraft engine to determine experimentally whether a modified spark-ignition engine could be operated efficiently on a compression-ignition cycle at conditions approximating those indicated in reference 4. The experimental data were used to compute the sea-level performance of a full-scale composite engine.

APPARATUS

A cylinder from an R-1820-G100 engine with a piston from an R-2600 engine was used; this combination had a compression ratio of 8.0.

Chromium-plated compression rings were used in the three compression-ring grooves to give long ring life for the high inlet-manifold pressures used. Two fuel-injection nozzles were inserted in the cylinder in place of the spark plugs, as shown in figure 1. The cylinder was mounted on an R-1820-G crankcase having 40° valve-overlap cams. A 300-horsepower dynamometer equipped with the necessary accessories and instrumentation was used to start the engine and to absorb the engine power. (See figs. 2 and 3.) Fuel was delivered to the nozzles by means of a gear-type primary pump and a cam-operated injection pump connected in series. The fuel had a cetane number of 50, a specific gravity of 0.835 at 60° F, and a hydrogen-carbon ratio of 0.156. Fuel flow was measured by a rotameter.

Multiple-orifice and pintle-type fuel-injection nozzles were tried singly and in pairs to determine their effects on engine performance. The single multiple-orifice nozzles had five or six orifices. When two multiple-orifice nozzles were used, each nozzle had three orifices. The total orifice areas ranged from 0.000660 to 0.001400 square inch. The pintle-type nozzles all produced a cone, coaxial with the nozzle center line. Nozzles with cones of 30°, 60°, and 90° each were tried. Preliminary investigations showed that the best combination was two multiple-orifice injection nozzles with flat, fan-shaped sprays with offset tips directed parallel to the top of the piston. The total orifice area was 0.000947 square inch for six orifices, three in each nozzle. (See fig. 1.)

High-pressure combustion air was obtained from the laboratory air system. The weight flow was controlled by suitable valves and was measured by a thin-plate orifice installed according to A.S.M.E. specifications. Surge tanks located before and after the engine were equipped with pressure taps to measure the inlet-manifold and exhaust pressures.

A formed sheet-metal cowling directed the cooling air from front to rear across the cylinder.

PROCEDURE

Runs were made at various exhaust pressures (30 to 100 in. Hg absolute) while the other engine conditions were held constant. The following table summarizes the constant conditions used in this investigation, as well as those suggested by the analysis of reference 4:

	Experiment	Analysis (reference 4)
Compression ratio	8.0	8.5
Engine speed, rpm	1600 ±10	2400
Inlet-manifold pressure, in. Hg absolute	100 ±0.15	120
Inlet-manifold air temperature, °F	160 ±5	200
Fuel-air ratio	0.040, 0.025 ±0.001	0.037
Maximum cylinder pressure, lb/sq in.	1200-1400	1200

A compression ratio of 8.0 instead of 8.5 (reference 4) was used because it was the highest that could be obtained with the available interchangeable pistons and cylinders.

An engine speed of 1600 rpm was chosen because a preliminary investigation showed that the power output and combustion-air flow increased very slowly with engine speeds above 1600 rpm. Several means were tried to improve the turbulence and combustion within the cylinder at engine speeds above 1600 rpm. In addition to various types of injection spray and various inlet-manifold air temperatures, spiral vanes in the entrance to the intake port, water injection into the inlet manifold, and a cylinder with enlarged intake and exhaust ports were tried. As none of these modifications gave the desired effect, the investigation was completed with the engine in its original configuration.

The inlet-manifold pressure was held constant at 100 inches of mercury absolute because a pressure of 120 inches of mercury absolute was unobtainable with the laboratory combustion-air control system. The inlet-manifold air temperature of 160° F was used because it was found to give better engine performance than the temperature of 200° F computed from the analysis of reference 4. The maximum cylinder pressure was held between 1200 and 1400 pounds per square inch by adjusting the injection advance angle.

The oil-in temperature was held at 150° F for all runs. The cooling-air pressure drop $\sigma\Delta p$ (where σ is the density ratio used to correct to NACA standard air conditions) was held between 23 and 25 inches of water for a fuel-air ratio of 0.040 and between 13.5 and 15.5 inches of water for a fuel-air ratio of 0.025. The temperature of the cooling air upstream of the cylinder was 93° F.

An approximation of the mechanical-friction power was obtained by motoring the engine with sea-level exhaust and inlet-manifold pressures.

METHOD OF COMPUTATION

The full-scale composite engine for which the performance was computed was assumed to consist of an engine (nine cylinders with a displacement volume of 1820 cu in.), a compressor, and a turbine. The performance was computed for sea-level conditions from single-cylinder experimental data as follows:

(a) The full-scale indicated mean effective pressure was assumed to be the sum of the brake and mechanical-friction mean effective pressures obtained from the single-cylinder data. The indicated mean effective pressure thus obtained includes the contribution of all four strokes of the cycle.

(b) From this indicated mean effective pressure, the full-scale indicated horsepower was computed and the corresponding gross brake horsepower was obtained by subtracting a full-scale mechanical-friction horsepower. The mechanical-friction horsepower was computed from the equation

$$fhp = K(N)^2$$

where

fhp mechanical-friction horsepower

K constant, 0.00002394

N engine speed, rpm

The value of K corresponding to the bore, the stroke, and the number of cylinders of the engine was determined from an empirical equation based on a large amount of experimental data on various types of reciprocating engine. From this equation the mechanical-friction horsepower at 1600 rpm is 61.3 for the full-scale engine.

(c) The full-scale combustion-air flow was taken as nine times the single-cylinder air flow. The compressor horsepower was considered that required to compress the combustion air from NACA sea-level pressure and temperature to inlet-manifold pressure with an adiabatic efficiency of either 70 or 85 percent. The combustion air was assumed to be cooled from compressor-outlet temperature to 160° F with an aftercooler having an effectiveness of either 66 or 60 percent depending on the compressor efficiency.

(d) The turbine horsepower was taken as that available from expansion of the exhaust gas from exhaust pressure and temperature to

sea-level pressure with an adiabatic efficiency of either 70 or 85 percent. Reference 5 was used in the computation of the turbine horsepower.

The exhaust-gas temperatures were assumed to be 1800° and 1200° R for fuel-air ratios of 0.040 and 0.025, respectively. These values were checked by later runs and found to be approximately correct.

(e) The turbine and the compressor were assumed to be mounted on a common shaft and the difference in their powers was transmitted to or from the engine through gears having an efficiency of 90 percent. The horsepower difference was divided or multiplied by the gear efficiency depending on whether the turbine horsepower was less or greater than that of the compressor, and the result was subtracted or added, respectively, to the engine gross brake power (item (b)) to obtain the net brake horsepower of the system.

The assumption of constant turbine and compressor efficiencies for these computations implies that a different turbine and a different compressor are used at each exhaust pressure in order to meet the required operating characteristics for that condition.

RESULTS AND DISCUSSION

Single-Cylinder-Engine Experimental Data

The best single-cylinder engine performance was obtained at an engine speed of 1600 rpm. The indicated horsepower and combustion-air flow increased very slowly for engine speeds above 1600 rpm. Because none of the modifications that were tried to improve the turbulence and combustion gave the desired effect, the investigation was completed with the engine in its original configuration.

The effect of exhaust pressure on combustion-air flow, indicated specific air consumption, volumetric efficiency, indicated mean effective pressure, indicated specific fuel consumption, and maximum cylinder pressure of the single-cylinder engine at an inlet-manifold pressure of 100 inches of mercury absolute, an inlet-manifold air temperature of 160° F, and an engine speed of 1600 rpm for fuel-air ratios of 0.040 and 0.025 is shown in figure 4. For a fuel-air ratio of 0.040 and sea-level exhaust pressure, the indicated mean effective pressure based on all four strokes of the cycle was 313 pounds per square inch (fig. 4(b)). As the exhaust pressure was increased to 100 inches of mercury absolute, the indicated mean effective pressure decreased to 240 pounds per square inch, a loss of 23 percent. Similarly, the combustion-air flow fell off about 25 percent with an increase of the engine exhaust pressure from

30 to 100 inches of mercury absolute (fig. 4(a)). At a fuel-air ratio of 0.025 the corresponding decreases in indicated horsepower and combustion-air flow were 31 and 25 percent, respectively.

The cylinder-head temperatures were below normal operating temperatures for a spark-ignition engine (fig. 5). The temperatures at the rear of the barrel were on the order of 315° to 355° F for a fuel-air ratio of 0.040 (fig. 5(a)) and 270° to 310° F for a fuel-air ratio of 0.025 (fig. 5(b)).

The engine started readily with an inlet-manifold pressure as low as 40 to 45 inches of mercury absolute, an inlet-manifold air temperature of 160° F, and an injection advance angle of 10° to 15°. The engine ran evenly but was noisy, as is characteristic of the compression-ignition cycle. No pitting of the surfaces of the valves or the piston was observed and the carbon deposits on the cylinder head and the piston were moderate. The piston rings were replaced after 50 hours of operation because of wear caused by high barrel temperatures and high inlet-manifold pressures.

Full-Scale-Engine Calculations

Although the engine power decreases with an increase in exhaust pressure, the power developed by the turbine increases. In addition, the power absorbed by the compressor decreases with an increase in exhaust pressure because of the reduction in combustion-air flow due to the increase in residual gases in the engine. As a result of the relative rate of these variations, there is some engine exhaust pressure where the net power of the engine with the compressor and turbine attached is a maximum.

The computed sea-level performance of a full-scale composite compression-ignition engine is shown in figure 6. At a fuel-air ratio of 0.040 and an exhaust-gas temperature of 1800° R (fig. 6(a)), the composite engine with a compressor and a turbine each having an efficiency of 70 percent develops a maximum of 952 net brake horsepower at an exhaust pressure of 75 inches of mercury absolute. The corresponding net brake mean effective pressure and specific fuel consumption are 258 pounds per square inch and 0.450 pound per net brake horsepower-hour, respectively. For these conditions the turbine and compressor powers are almost equal. Any further increase in the exhaust pressure causes a decrease in the net brake horsepower. The minimum net brake specific fuel consumption occurs at an exhaust pressure of 100 inches of mercury absolute at which condition the net brake specific fuel consumption is 0.435 pound per net brake horsepower-hour and the net brake horsepower and the net brake mean effective pressure are 900 and 244 pounds per square inch, respectively.

For efficiencies of 85 percent the turbine and compressor powers are equal at an exhaust pressure of 55 inches of mercury absolute. The maximum net brake horsepower, however, again occurs at an exhaust pressure of 75 inches of mercury absolute. The maximum net power and corresponding net brake specific fuel consumption are 1060 horsepower and 0.405 pound per net brake horsepower-hour, respectively. These values represent a 5-percent increase in net power and a 12-percent decrease in the net brake specific fuel consumption over the values for which the turbine and compressor powers are equal. The minimum net brake specific fuel consumption is 0.385 pound per net brake horsepower-hour and again occurs at an exhaust pressure of 100 inches of mercury absolute.

The performance of the composite engine is shown in figure 6(b) for a fuel-air ratio of 0.025 and an exhaust-gas temperature of 1200° R. The maximum net brake horsepower for turbine and compressor efficiencies of 85 percent is 26 percent less than that for a fuel-air ratio of 0.040 and the corresponding net brake specific fuel consumption is 9 percent less.

The exhaust pressure for maximum net brake horsepower is 65 inches of mercury absolute for both the 70- and 85-percent efficiencies, and for minimum net brake specific fuel consumption it is approximately 85 inches of mercury absolute; however, the net brake specific fuel consumption changes very little for exhaust pressures from 65 to 100 inches of mercury absolute.

Inspection of figure 6(b) shows that at a fuel-air ratio of 0.025, when the turbine and compressor efficiencies are 70 percent each, the turbine horsepower is always less than the compressor horsepower for the range of exhaust pressures covered (30 to 100 in. Hg absolute). For efficiencies of 85 percent the turbine and compressor horsepowers are equal at an exhaust pressure of approximately 75 inches of mercury absolute at which point the net brake horsepower is close to its maximum value.

The maximum net brake horsepowers and minimum net brake specific fuel consumptions of the hypothetical full-scale composite compression-ignition engine are summarized in the following table for an inlet-manifold pressure of 100 inches of mercury absolute at an engine speed of 1600 rpm:

Exhaust pressure (in. Hg absolute)	Fuel-air ratio	Turbine and compressor efficiencies					
		0.70			0.85		
		Net brake mean effective pressure (lb/sq in.)	Net brake horsepower	Net brake specific fuel consumption (lb/nbhp-hr)	Net brake mean effective pressure (lb/sq in.)	Net brake horsepower	Net brake specific fuel consumption (lb/nbhp-hr)
Maximum net brake horsepower							
75	0.040	258	952	0.450	288	1060	0.405
65	.025	185	680	.426	213	785	.370
Minimum net brake specific fuel consumption							
100	0.040	244	900	0.435	274	1010	0.385
85	.025	175	645	.420	203	746	.360

Satisfactory combustion could not be obtained at engine speeds above 1600 rpm; therefore, a direct comparison could not be made with the analysis of reference 4, which was based on an engine speed of 2400 rpm. The results obtained herein can be extrapolated, however, to the conditions of engine speed, inlet-manifold pressure, fuel-air ratio, and compression ratio of the analysis of reference 4; that is, 2400 rpm, 120 inches of mercury absolute, 0.037, and 8.5, respectively. The extrapolated value of the maximum net brake horsepower for compressor and turbine efficiencies of 70 percent is 1550 net brake horsepower, which is approximately 75 percent of that shown in reference 4. Because of the assumptions necessarily made in reference 4, this agreement is considered to be a satisfactory check of the predicted performance. Satisfactory performance at speeds of 2400 rpm might be obtained by use of a cylinder designed specifically for compression-ignition operation.

SUMMARY OF RESULTS

The performance of a single-cylinder spark-ignition engine modified to operate on a compression-ignition cycle with a compression ratio of 8.0 was determined. From these data, the performance was computed for a full-scale composite engine, which was assumed to consist of an engine with nine cylinders having a displacement volume

of 1820 cubic inches, with a compressor and a turbine mounted on a common shaft and geared to the engine crankshaft. The composite engine was assumed to operate at an inlet-manifold pressure of 100 inches of mercury absolute and a speed of 1600 rpm. The following results were obtained:

1. The best single-cylinder engine performance was obtained at an engine speed of 1600 rpm. The indicated horsepower and combustion-air flow increased very slowly for engine speeds above 1600 rpm.

2. At an engine speed of 1600 rpm and an inlet-manifold pressure of 100 inches of mercury absolute, the combustion-air flow of the single-cylinder engine decreased 25 percent as the exhaust pressure was increased from 30 to 100 inches of mercury absolute. For fuel-air ratios of 0.040 and 0.025, the corresponding decrease in indicated mean effective pressure was 23 and 31 percent, respectively.

3. The maximum net brake horsepowers of the composite engine were 952 and 1060 (net brake mean effective pressures of 258 and 288 lb/sq in.) at net brake specific fuel consumptions of 0.450 and 0.405 pound per net brake horsepower-hour for turbine and compressor efficiencies of 70 and 85 percent, respectively, at a fuel-air ratio of 0.040, an exhaust-gas temperature of 1800° R, and an exhaust pressure of 75 inches of mercury absolute.

4. The minimum net brake specific fuel consumptions of the composite engine for a fuel-air ratio of 0.040 (exhaust-gas temperature, 1800° R) are 0.435 and 0.385 pound per net brake horsepower-hour with net brake horsepowers of 900 and 1010 (net brake mean effective pressures of 244 and 274 lb/sq in.) for turbine and compressor efficiencies of 70 and 85 percent, respectively, at an exhaust pressure of 100 inches of mercury absolute.

5. Reduction of the fuel-air ratio from 0.040 to 0.025 causes a 26-percent decrease in maximum net brake horsepower of the composite engine with a 9-percent decrease in net brake specific fuel consumption at turbine and compressor efficiencies of 85 percent.

Aircraft Engine Research Laboratory,
National Advisory Committee for Aeronautics,
Cleveland, Ohio.

REFERENCES

1. Hannum, Richard W., and Zimmerman, Richard H.: Calculations of the Economy of an 18-Cylinder Radial Aircraft Engine with an Exhaust-Gas Turbine Geared to the Crankshaft at Cruising Speed. NACA ARR No. E5K28, 1945.

2. Sanders, J. C., and Mendelson, Alexander: Calculations of the Performance of a Compression-Ignition Engine-Compressor Turbine Combination. I - Performance of a Highly-Supercharged Compression-Ignition Engine. NACA ARR No. E5K06, 1945.

3. Mendelson, Alexander: Calculations of the Performance of a Compression-Ignition Engine-Compressor Turbine Combination. II - Performance of Complete Combination. NACA RM No. E7B03a, 1947.

4. Hall, Eldon W.: A Theoretical Analysis of the Performance of a Diesel Engine-Compressor-Turbine Combination for Aircraft. NACA ACR No. E5D10, 1945.

5. Pinkel, Benjamin, and Turner, L. Richard: Thermodynamic Data for the Computation of the Performance of Exhaust-Gas Turbines. NACA ARR No. 4B25, 1944.

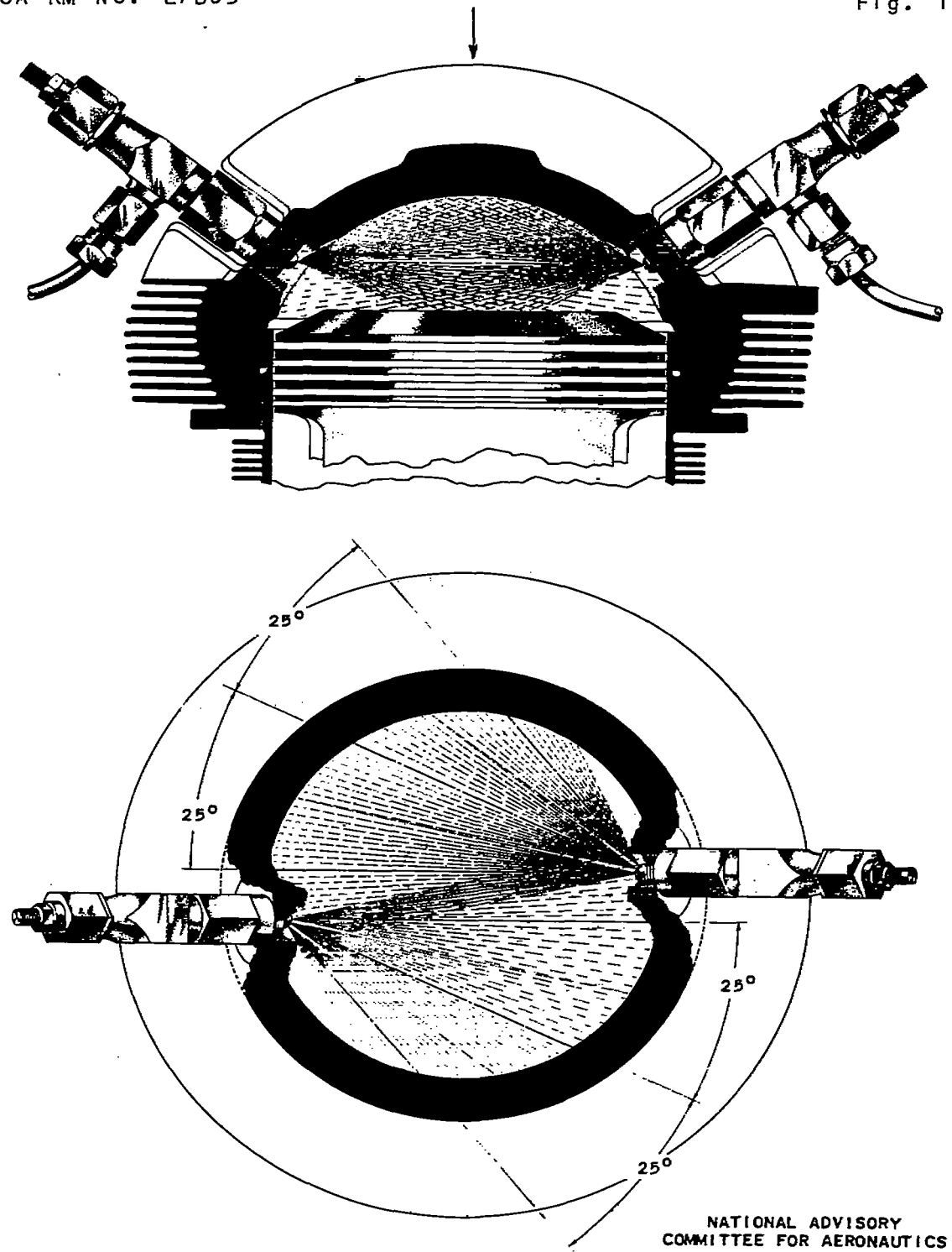

Figure 1. - Cutaway sketch of air-cooled cylinder showing location of fuel-injection nozzles in spark-plug openings and pattern of fuel-spray in cylinder.

667

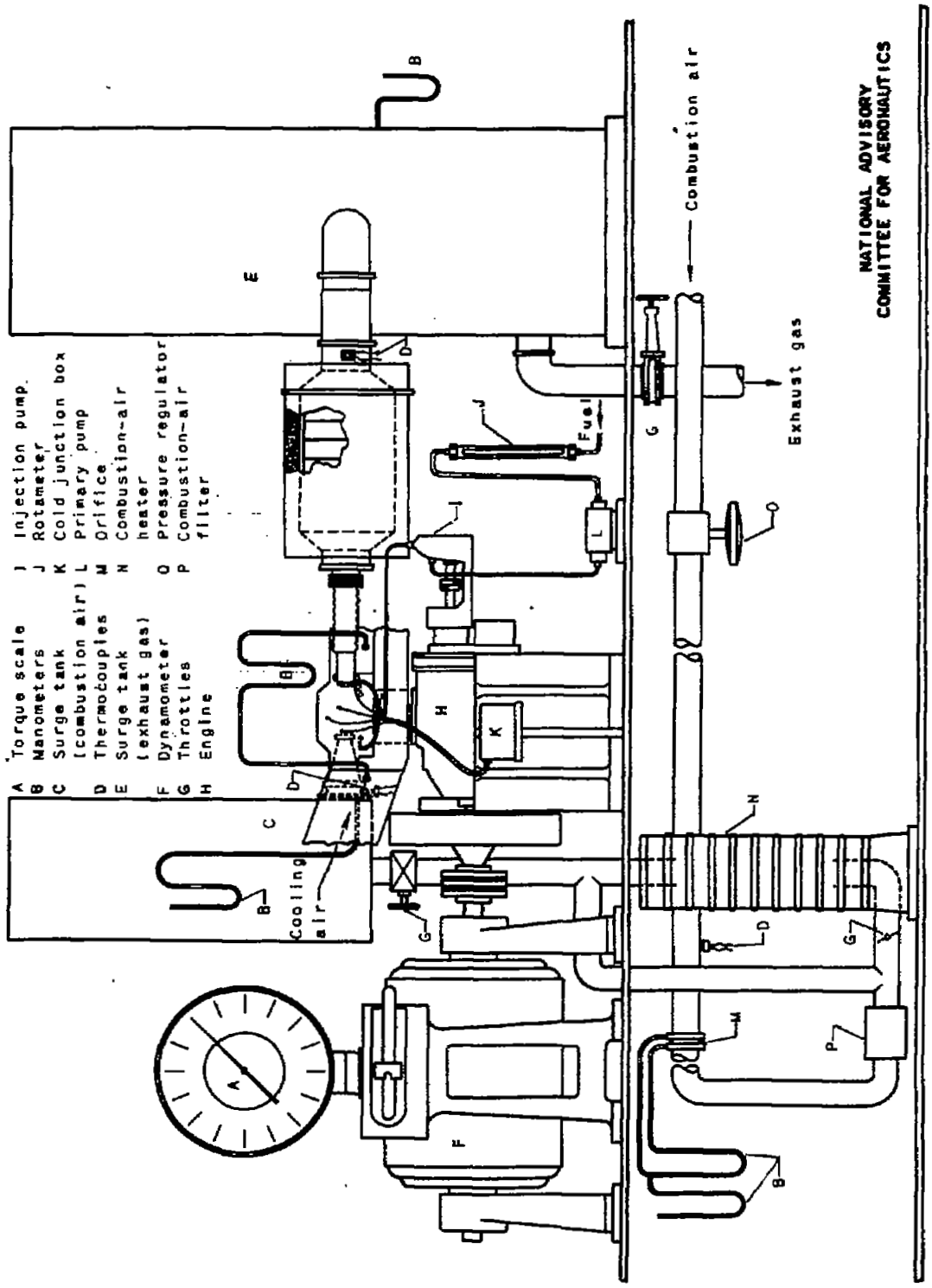

Figure 2. - Diagrammatic sketch of engine and instrumentation.

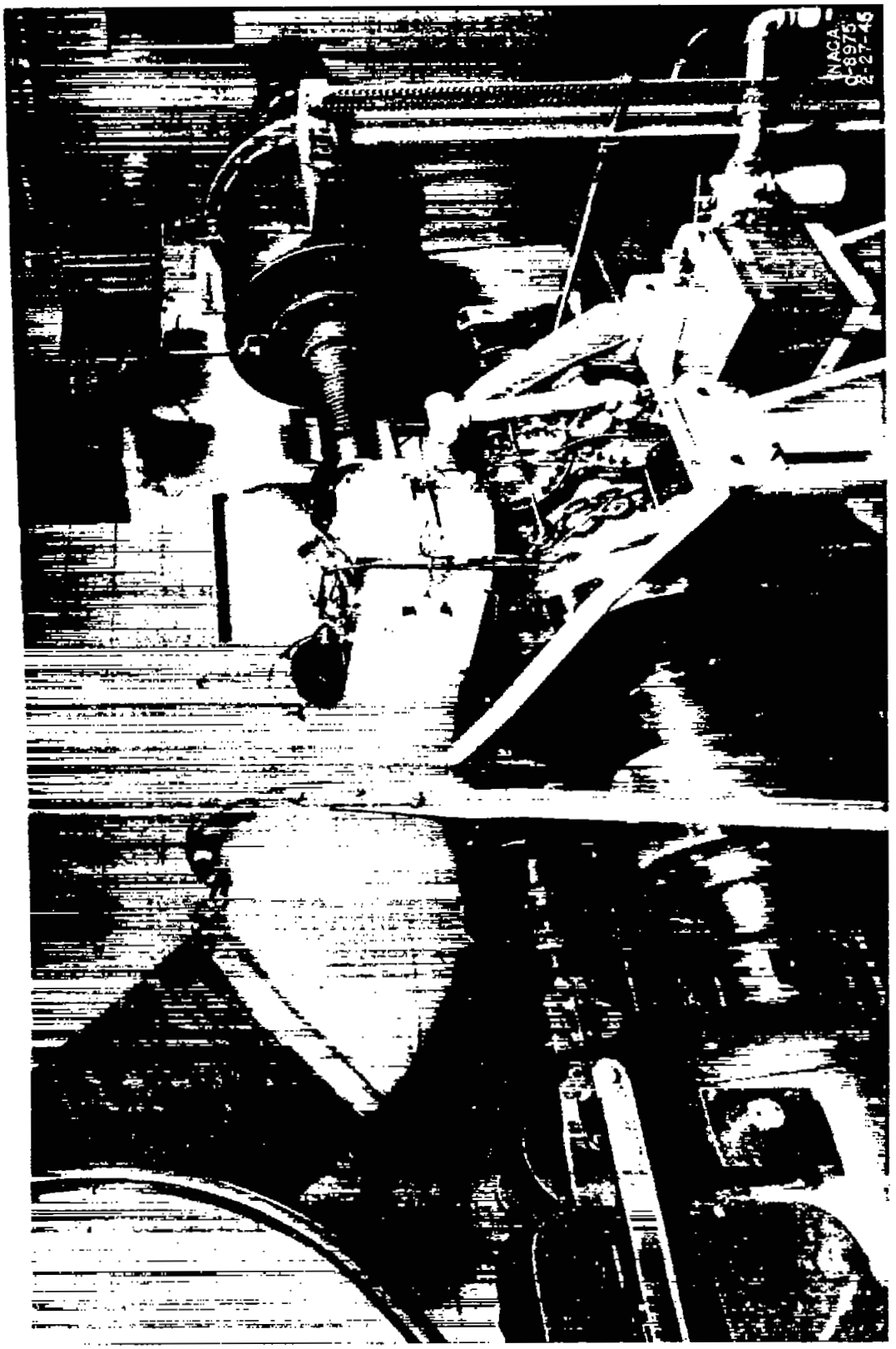

Figure 3. - General view of setup.

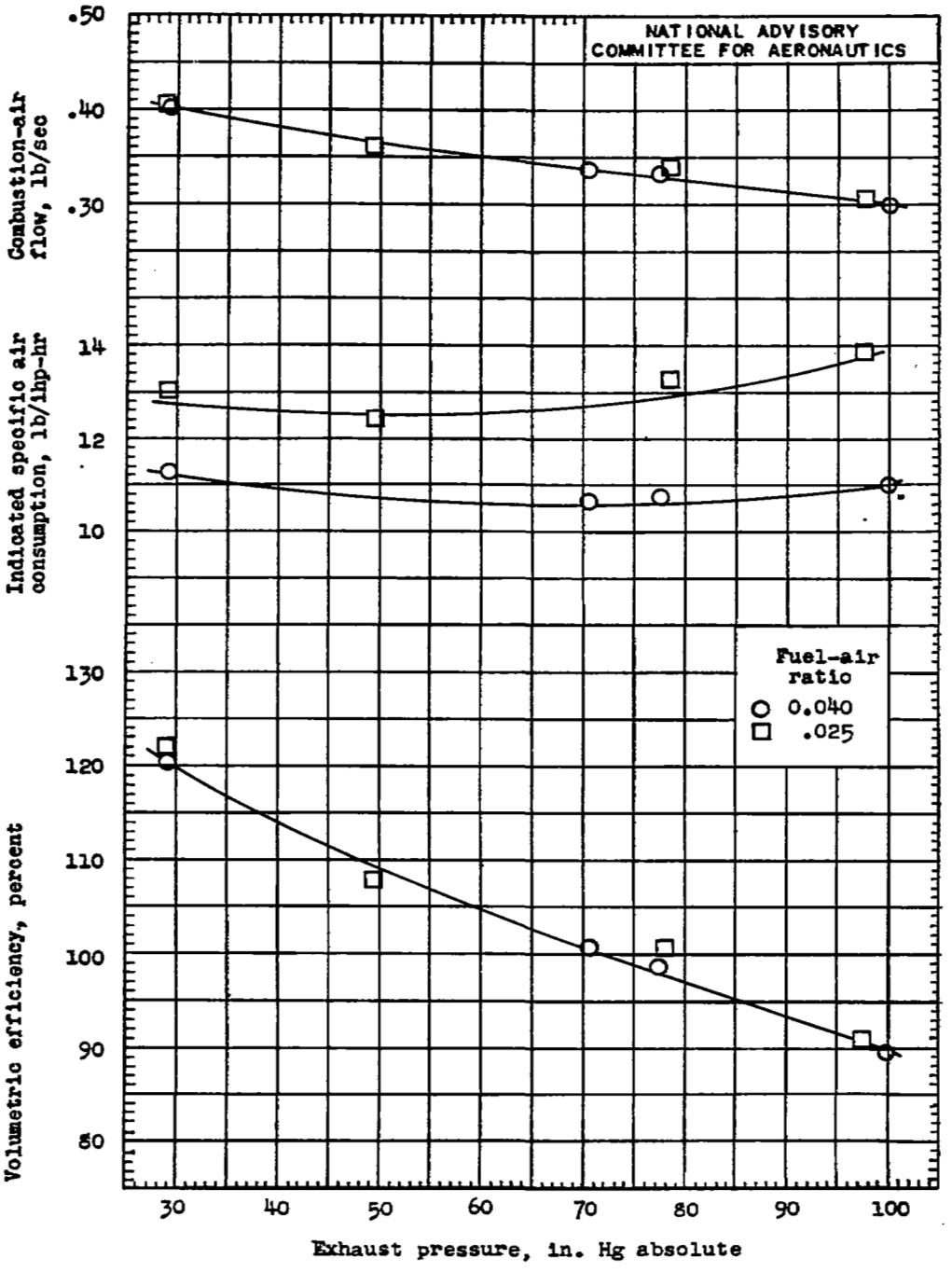

(a) Air-flow characteristics.

Figure 4. - Performance of a single-cylinder engine converted to compression-ignition operation for various engine exhaust pressures. Inlet-manifold pressure, 100 inches of mercury absolute; inlet-manifold air temperature, 160° F; engine speed, 1600 rpm; compression ratio, 8.0; cooling-air temperature, 93° F.

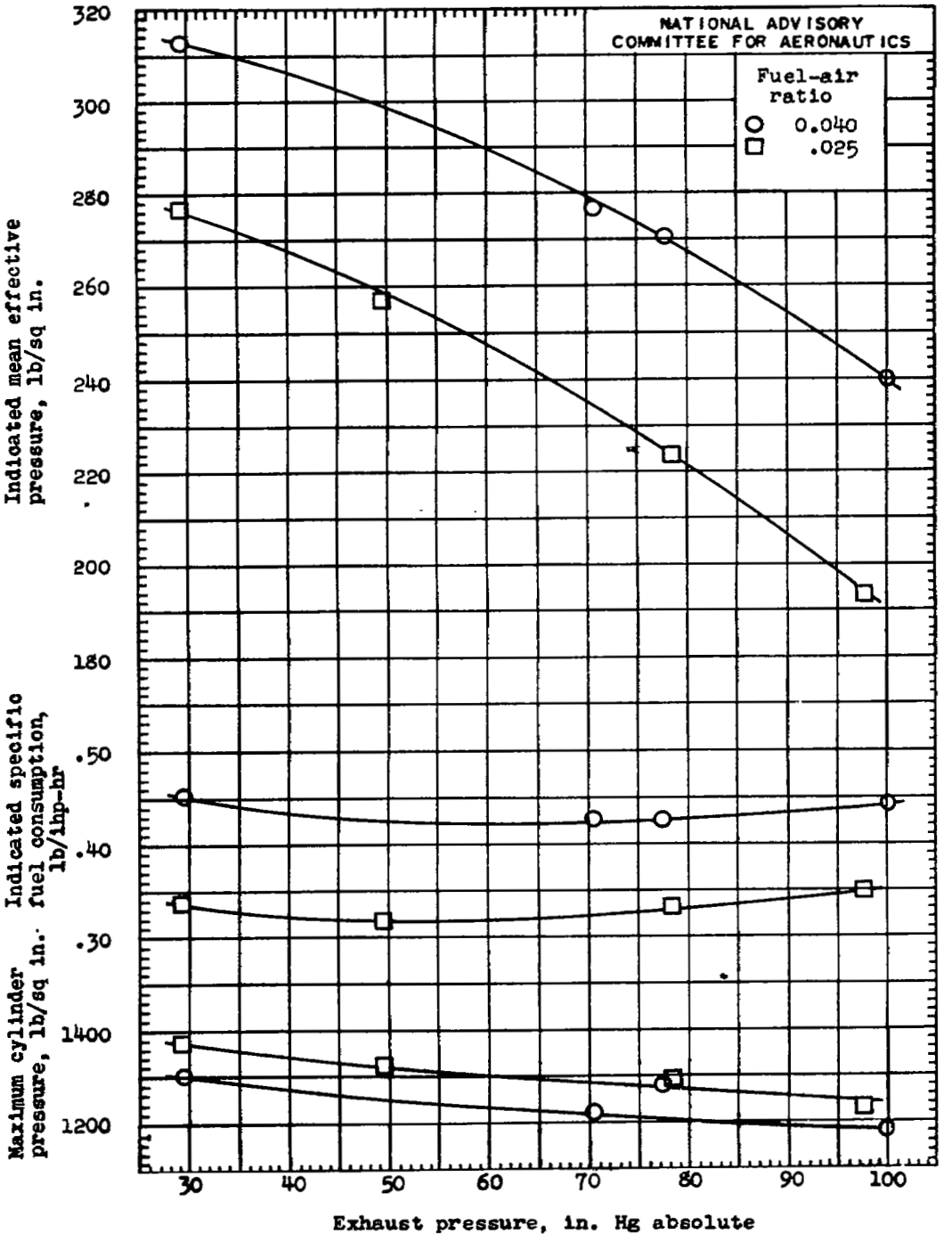

(b) Indicated mean effective pressure, indicated specific fuel consumption, and maximum cylinder pressure.

Figure 4. - Concluded. Performance of a single-cylinder engine converted to compression-ignition operation for various engine exhaust pressures. Inlet-manifold pressure, 100 inches of mercury absolute; inlet-manifold air temperature, 160° F; engine speed, 1600 rpm; compression ratio, 8.0; cooling-air temperature, 93° F.

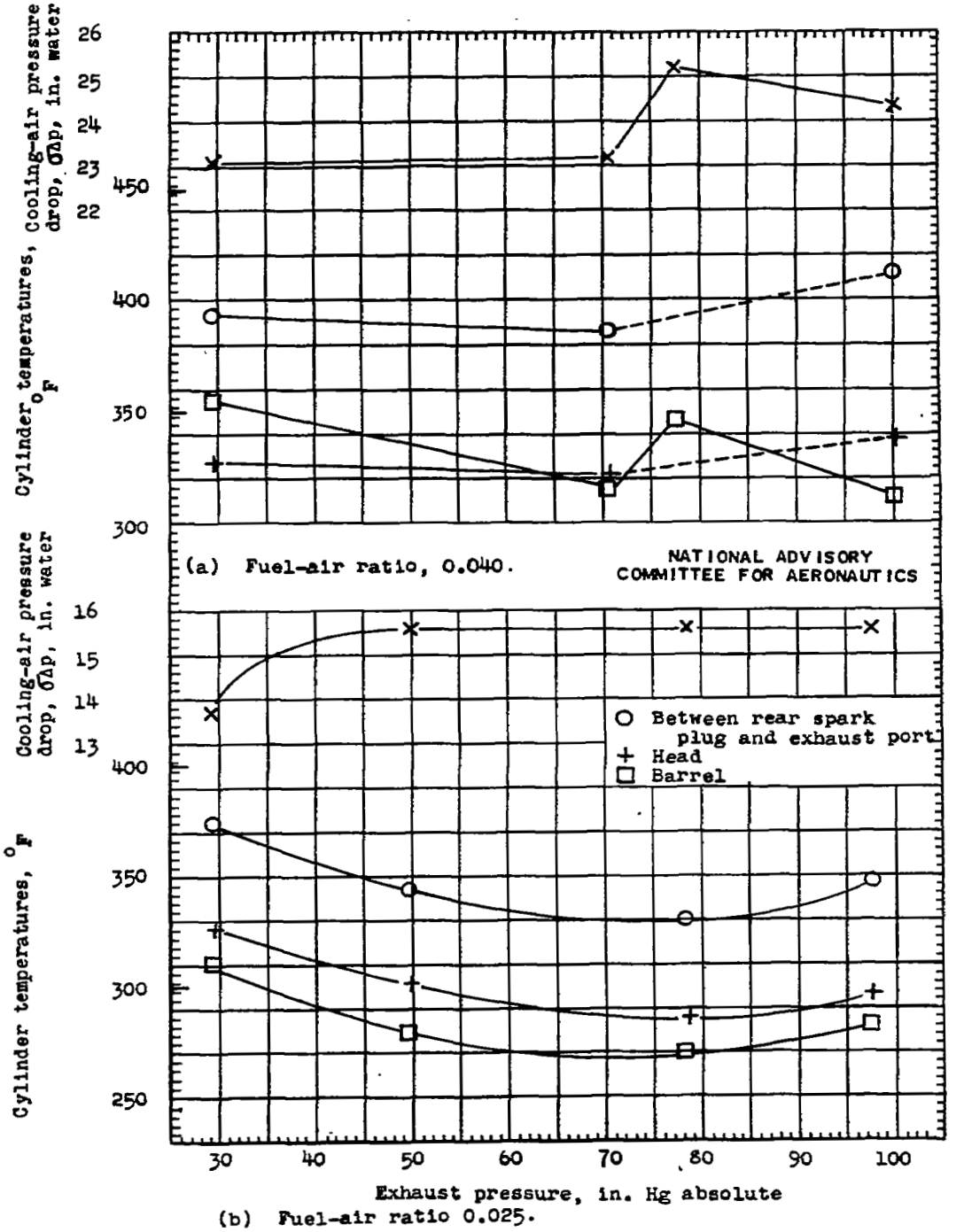

(b) Fuel-air ratio 0.025.

Figure 5. - Variation of cooling-air pressure drop and barrel and head temperatures of a single-cylinder engine converted to compression-ignition operation for various engine exhaust pressures. Inlet-manifold pressure, 100 inches of mercury absolute; inlet-manifold air temperature, 160° F; engine speed, 1600 rpm; cooling-air temperature, 93° F. (The broken lines indicate that temperature readings were not taken at an exhaust pressure of 77.5 in. of Hg absolute for a fuel-air ratio of 0.040.)

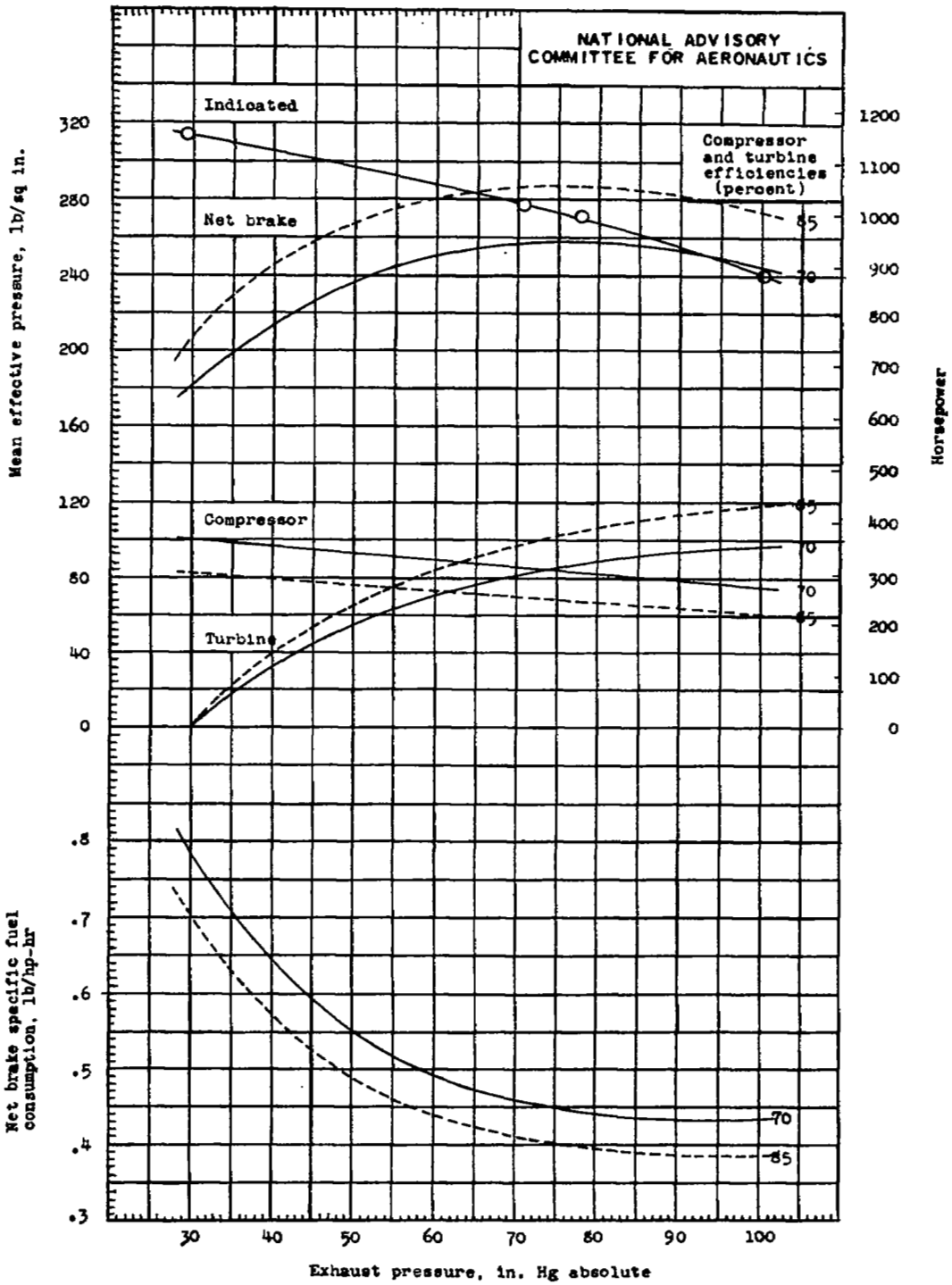

(a) Fuel-air ratio, 0.040; exhaust-gas temperature, 1500° R.

Figure 6. - Computed sea-level performance of a composite engine comprising engine converted to compression-ignition operation, compressor, and turbine at various engine exhaust pressures. Inlet-manifold pressure, 100 inches of mercury absolute; inlet-manifold air temperature, 160° F; engine speed, 1600 rpm; compression ratio, 8.0; cooling-air temperature, 93° F; gear efficiency, 90 percent.

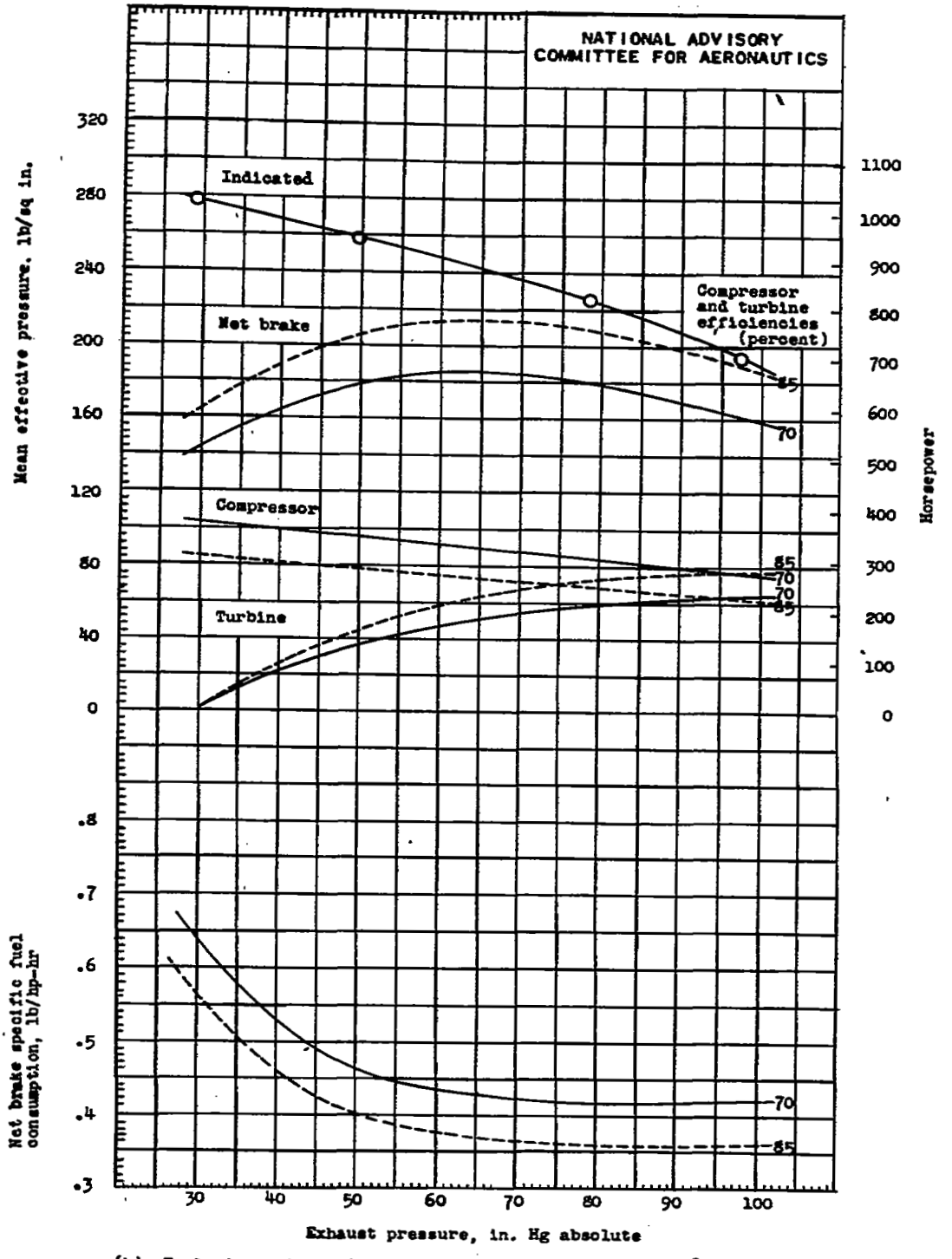

(b) Fuel-air ratio, 0.025; exhaust-gas temperature, 1200° R.

Figure 6. - Concluded. Computed sea-level performance of a composite engine comprising engine converted to compression-ignition operation, compressor, and turbine at various engine exhaust pressures. Inlet-manifold pressure, 100 inches of mercury absolute; inlet-manifold air temperature, 160° F; engine speed, 1600 rpm; compression ratio, 8.0; cooling-air temperature, 93° F; gear efficiency, 90 percent.

TSDIN FORM 69 A (13 MCH 47)

RESTRICTED

19-6-13-18

ATI- 9643

ORIG. AGENCY NUMBER

RM-E7B03

REVISION

McCoy, J. A.
Szel, Frank

AUTHOR(S)

DIVISION: Power Plants, Reciprocating (6)

SECTION: Performance (13)

CROSS REFERENCES: Engines, Compound - Performance (32884.7); Ignition, Compression (50708); Fuel consumption (42280)

AMER. TITLE: Computed performance of a composite engine based on experimental data for a single-cylinder conventional aircraft engine converted to compression-ignition operation

FORG'N. TITLE:

ORIGINATING AGENCY: National Advisory Committee for Aeronautics, Washington, D. C.

TRANSLATION:

COUNTRY	LANGUAGE	FORG'N.CLASS	U. S.CLASS.	DATE	PAGES	ILLUS.	FEATURES
U.S.	Eng.		Restr.	Feb '47	19	10	photos, tables, diagrs, graphs

ABSTRACT

A cylinder from R-1820-G100 engine with piston from R-2600 engine operating at compression ratio of 8.0 was tested. Runs were made at various exhaust pressure from 30 to 100 in. hg absolute while other engine conditions were held constant. Best single-cylinder engine performance was obtained at 1600 rpm. Reduction of fuel/air ratio from 0.040 to 0.025 caused 25% decrease in maximum net bhp of composite engine. Nine percent decrease in net brake specific fuel consumption was noted.

NOTE: Requests for copies of this report must be addressed to: N.A.C.A., Washington, D. C.

T-2, HQ., AIR MATERIEL COMMAND

AIR TECHNICAL INTELLIGENCE

RESTRICTED

AD-B805 715

UNCLASSIFIED PER AUTHORITY: INDEX
OF NACA TECHNICAL PUBLICATIONS
DATED 31 DECEMBER 1947.

AUG 7 1950

P 21/7

(23) * Compression Ignition
Engines

Fuel Consumption