PHOTOGRAPH THIS SHEET

AD-A995 419

DTIC ACCESSION NUMBER

LEVEL

INVENTORY

1

OPERATION RANGER

DECONTAMINATION OF AIRCRAFT

DOCUMENT IDENTIFICATION

DISTRIBUTION STATEMENT A
Approved for public release;
Distribution Unlimited

DISTRIBUTION STATEMENT

ACCESSION FOR		
NTIS	GRA&I	☑
DTIC	TAB	☐
UNANNOUNCED		☐
JUSTIFICATION		
BY		
DISTRIBUTION /		
AVAILABILITY CODES		
DIST	AVAIL AND/OR SPECIAL	
A-1	24	

DISTRIBUTION STAMP

QUALITY INSPECTED 3

UNANNOUNCED

DTIC ELECTE MAR 0 4 1986 S D

D

DATE ACCESSIONED

DATE RETURNED

86 3 4 002

DATE RECEIVED IN DTIC

REGISTERED OR CERTIFIED NO.

PHOTOGRAPH THIS SHEET AND RETURN TO DTIC-DDAC

DTIC FORM DEC 83 70A

DOCUMENT PROCESSING SHEET

PREVIOUS EDITION MAY BE USED UNT STOCK IS EXHAUSTED.

Best
Available
Copy

UNCLASSIFIED [redacted]

JC.11B
DEFENSE NUCLEAR AGENCY
TECHNICAL LIBRARY
DIVISION
14 JAN 1983

OPERATION RANGER, DECONTAMINATION OF AIRCRAFT

Air Force

Major Carl E. Trexler

DTL-83,00 44

AD-A995 419

Classified to UNCLASSIFIED
Jnd DOE/DOD Review
By DOE/DNA Date 21 Nov 85
By DOE/DNA Date 5 Sep 85

Statement A
Approved for public release;
Distribution Unlimited
21 Nov 85

This [redacted] the Atomic Energy [redacted]

UNCLASSIFIED [redacted]

CLASSIFICATION [redacted]
DOWNGRADED [redacted] ON
DECLASSIFICATION [redacted]

(This document consists of 91 pages,
Copy No. 11 of 22 Copies, Series 6

UNCLASSIFIED

DECONT TION

AIR T
OPERATI NGER (U)

CARL E. THEIMER
Major, USAF
OIC Aircraft Decontamination
Operation RANGER

Statement A
Approved for public release;
Distribution Unlimited

[redacted]

X-800-5/11B

JRB/HC 8/1-92

UNCLASSIFIED

11 B

DNA-82-07143

[redacted] UNCLASSIFIED

TABLE OF CONTENTS

1. Overall Summary

2. Appendix

a.	List of Equipment	Tab "A"
b.	Detailed Procedure	Tab "B"
c.	Detailed Summary of Results	Tab "C"
d.	Graphs of Effectiveness of Decontamination	Tab "D"
e.	Detailed Calculations	Tab "E"
f.	Area Contamination	Tab "F"
g.	Detailed Survey Results	Tab "G"
h.	Final Survey of Aircraft	Tab "H"
i.	Detailed Conclusions and Recommendations	Tab "I"

UNCLASSIFIED

DECONTAMINATION OF AIRCRAFT

OPERATION RANGER

1. INTRODUCTION.

Successful decontamination of aircraft was a vital necessity during OPERATION RANGER in order that the Air Force might accomplish its mission and still meet the criteria established by the Atomic Energy Commission. The Air Force had to meet the detonation schedule without over-exposure of its personnel (maximum permissible dosage per mission being 200 milliroentgens). This had to be accomplished with a limited number of aircraft available for the entire operation.

Even though the tests were conducted in the continental United States, every effort was made to duplicate actual field conditions. No equipment, materials or other supplies were used that are not readily available at air bases outside the U. S. (For a detailed list of equipment see Tab A.)

The number of personnel actually participating in the decontamination work was held to a minimum in order to establish a reasonable time factor for decontaminating aircraft of the B-29 type.

Decontamination was effected by a purely hydraulic process. At no time was an airplane touched with mechanical devices such as brushes or scrapers. (See detailed procedure Tab B). This method of decontamination has many advantages such as less personnel required, decrease in radiation hazard, saving in time, and saving in equipment.

During OPERATION SANDSTONE Air Force personnel successfully decontaminated aircraft but not to the degree attained at Las Vegas. This unusual success was attributed to change in procedure, technique, and experience of personnel performing the decontamination work.

2. PROCEDURE

Decontamination was accomplished in the following manner:

(1) Aircraft were surveyed as they arrived from their missions.

(2) They were washed first with a water containing detergent (trisodium phosphate) in the ratio of one pound of detergent per 100 gallons of water.

(3) Aircraft were then surveyed a second time.

(4) They were washed then with a "GUNK" (compound cleaning, aircraft, Spec. #20015) solution containing one part "GUNK" to three

[redacted]

parts cleaning solvent (compound cleaning, Formula "C" Part No 7300-204500, class 07). The "GUNK" was rinsed off with water containing detergent.

(5) Aircraft were given a final survey after the washings were completed.

The only deviations from the standard procedure were as follows:

(1) On Shot No. 2 engines of one airplane were washed a third time.

(2) On Shots No. 3, 4, and 5 the last surveys were taken after the planes had been removed from the decontamination area.

Washing of the aircraft was effected by using the Chemical Warfare Service 400 gallon Power Driven Decontamination Apparatus (PDDA)(M3A2). This apparatus emits a spray or stream of solution under approximately 400 pounds pressure. Washing efforts were concentrated on the hottest parts of the aircraft as indicated by the first survey. (For detailed survey results see Tab G.)

3. RESULTS

The overall results obtained far surpassed expectations, exceeding by 20% any previous decontamination results obtained on aircraft. For a summary of the results obtained see table, entitled "Summary of Results."

The tables show that of the contamination present at 1st survey, only 7% remained upon completion of decontamination procedures. After making suitable allowances for normal decay, the overall effective decontamination was calculated to be 81.6%. Of the contamination present at the start of the first washing, 65.3% was removed; of that present at the start of the second washing, 43.2% was removed. All aircraft were released at the end of the operation without any restriction on their use. The results of the decontamination are shown graphically in Tab D.

To accomplish these results, the average time required per aircraft was 127 minutes for decontamination and 61 minutes for surveying, adding up to a total of 188 minutes. The average decontamination materials used per aircraft were 1200 - 1600 gallons of water, 12 - 16 lbs. of trisodium phosphate, 150-200 lbs. of "GUNK" and 75 - 80 gallons of cleaning solvent.

Contamination of the decontamination area due to washing of the aircraft is shown in Tab F. The highest intensity of this area was 20 MR/hr. Prior to leaving the entire decontamination area was properly posted.

[redacted]

SUMMARY OF RESULTS

ITEM		SHOT NO 1		SHOT NO 2	SHOT NO 3		SHOT NO 4	SHOT NO 5	
		QUEBALL NO 1	QUEBALL NO 2	QUEBALL NO 1	QUEBALL NO 1	QUEBALL NO 2	QUEBALL NO 1	QUEBALL NO 1	QUEBALL NO 2
ensity 1st Survey (Mr/Hr)	MAX.	2500.0	[illegible]	[illegible]	680.0	[illegible]	[illegible]	120.0	290.0
	AVE	[illegible]	[illegible]	[illegible]	[illegible]	[illegible]	[illegible]	170.0	[illegible]
	MIN.	[illegible]	[illegible]	20.0	[illegible]	40.0	[illegible]	44.0	18.0
ensity 2nd Survey (Mr/Hr)	MAX.	145.0	50.0	[illegible]	[illegible]	100.0	100.0	110.0	40.0
	AVE.	[illegible]	[illegible]	[illegible]	33.0	[illegible]	33.8	27.3	14.8
	MIN.	0	[illegible]	[illegible]	[illegible]	12.0	[illegible]	B.G.	10.0
ensity 3rd Survey (Mr/Hr)	MAX.	60	[illegible]	[illegible]	50.0	40.0	30.0	[illegible]	25.0
	AVE.	17.0	[illegible]	[illegible]	15.8	[illegible]	10.2	11.3	[illegible]
	MIN.	[illegible]	0.5	8.0	[illegible]	3.0	2.0	B.G.	B.G.
ensity 4th Survey (Mr/Hr)	MAX.			25.0					
	AVE.			11.5	11.8*				
	MIN.			1.0					
ercentage Removal 1st Decontamination		[illegible]	[illegible]	[illegible]	60.7	58.0	60.9	66.5	59.0
ercentage Removal 2nd Decontamination		[illegible]	[illegible]	33.1	45.4	41.3	46.0	39.9	43.2
ercentage Removal 3rd Decontamination				44.7					
ercentage Removal 1st, 2nd & 3rd Decontamination		89.9	[illegible]	80.5	78.7	75.3	[illegible]	[illegible]	[illegible]
me Required For Decontamination (Min.)		120	120	125	135	125	150	135	75
me Required For Survey (Min.)		60	5	[illegible]	55	55	80	55	60
tal Time For Decontamination & Survey (Min.)		180	[illegible]	190	190	180	250	200	135
ercentage Of Original Contamination Removed By Decontamination Decay After Decontamination Completed.		[illegible]	[illegible]	[illegible]	[illegible]	[illegible]	[illegible]	[illegible]	86.7

erall Average Effective Decontamination 1st Washing	65.3%
erall Average Effective Decontamination 2nd Washing	13.2%
erall Average Effective Decontamination 1st & 2nd Washings	81.6%
erall Percentage Of Original Contamination Removed By ontamination & Decay After Decontamination Completed	93.0%

Average Time For Decontamination	127 (Min.)
Average Time For Survey	61 (Min.)
Average Time For Decontamination & Survey	187.5(Min.)

* See Detailed Results (Appendix)

[redacted]

[redacted]

SUMMARY OF RESULTS

(Continued)

AIRCRAFT TYPE	AIRCRAFT NUMBER	*INTENSITY OF AIRCRAFT PRIOR TO RELEASE (MR/HR)			REMARKS
		MAXIMUM	AVERAGE	MINIMUM	
B-29	521872	BG	BG	BG	
B-29	263459	20	6.4	BG	OIL CHANGED
B-29	521833	6	2.0	BG	OIL CHANGED
B-29	44-86399	BG	BG	BG	
B-29	521831	1.5	BG	BG	
B-17	338635	BG	BG	BG	
C-47	477263	1.5	BG	BG	

*All intensities are in milliroentgens per hour and for gamma only.

[redacted]

[redacted]

4. CONCLUSIONS AND RECOMMENDATIONS

From the results obtained it is obvious that decontamination of aircraft is well worthwhile when the presence of radioactivity interferes with successful completion of a mission. This decontamination can be accomplished with a minimum of time, personnel and expense and without harm to the aircraft or personnel.

Even though the results were better than expected, it is believed that the overall effectiveness can be increased by employing techniques tried during the tests such as increasing the rate of flow of water over the contaminated area and by the removal of certain parts of the cowling to make more readily accessible, contaminated parts of the engine.

It is further believed that the procedure used for decontamination during OPERATION RANGER is the best method yet utilized and it is strongly recommended that it be established as SOP for the Air Force until additional competency is established.

[redacted]

APPENDIX

[redacted]

LIST OF EQUIPMENT

[redacted]

[redacted]

LIST OF EQUIPMENT

1. 2 400 gallon power driven decontamination apparatus (PDDA, M3A2) (This piece of equipment is the old water wagon of World War II)

2. 1 weapon carrier

3. 2 1400 gallon pontoon water tanks

4. 1 4 foot length of 3/4" galvanized pipe and fittings to connect to a 2 inch female connection.

5. 3 55 gallon drums

6. 2 engine maintenance crew stands

7. Class X clothings

8. Radiological instruments

9. Gunk

10. Trisodium phosphate (Detergent used with regular GI mechanical dishwasher)

11. Water

12. Aircraft towing equipment

[redacted]

[redacted]

DETAILED PROCEDURE

[redacted]

[redacted]

DETAILED PROCEDURE

After the aircraft landed and taxied to its designated location, the aircraft was monitored with Ion Chamber Type radiation detection instruments at the points shown in the detailed survey results, Tab G.

Upon completion of the monitoring, the aircraft was either considered to be contaminated or released for taxi back to its normal parking area. If contaminated the aircraft was towed to the decontamination area. The next step in the actual decontamination process was to wash the aircraft with water containing detergent.

Two Power Driven Decontamination Apparatus (PDDA, M3A2) units were filled with 400 gallons of water from pontoon tanks by utilizing the filling equipment of the PDDA. The tank agitator was started and four pounds of trisodium phosphate were added to the water, making a solution of approximately 1200 parts per million. (It is recommended that a detergent such as trisodium phosphate or sodium hexametaphosphate be used instead of a compounded detergent which often contains chemicals leaving a residue on the skin of the aircraft.)

After complete mixing of water and detergent, approximately five minutes, the PDDA's were spotted on each forward side of the aircraft and washing started utilizing maximum pressure produced by the PDDA's. Maximum effort was concentrated on the hottest parts of the aircraft although the entire craft was thoroughly washed, using 600 - 800 gallons of water plus detergent.

When the first washing was completed the aircraft was remonitored and the results recorded. Next the aircraft engines and other hot spot were washed with a gunk solution and rinsed with water containing detergent prepared as described above.

The gunk solution was prepared by mixing one part of "GUNK" (Compound, Cleaning, Aircraft, Spec #20015) with three parts of cleaning solvent (Compound, Cleaning, Formula "C", Part No 7300-204500, Class 07) in a 55 gallon drum. One quarter of a drum of "GUNK", approximately 110 pounds, was poured into an empty drum manually. The durm was placed in a weapons carrier and approximately 40 gallons of cleaning solvent added by the use of the pump on the PDDA. This mixture was thoroughly mixed until all the gunk was in solution. Another drum of gunk was prepared in a like manner. The normal requirement for proper decontamination was one half drum of gunk solution per engine.

[redacted]

[redacted]

By making the proper adjustments and rearrangements to the piping system of the PDDA, it is possible to utilize the pump of the PDDA to apply the gunk solution to the aircraft.

The gunk solution was allowed to remain on the engines and other hot spots only about two minutes after application had stopped. It was then washed thoroughly with water containing detergent or with a solution accidently discovered (see below) followed by a light rinse with water containing detergent. Between 600 - 800 gallons of water plus detergent or 300 - 400 gallons of special solution and 300 - 400 gallons of water and detergent.

The solution accidently discovered came about when the PDDA was used for pumping the gunk and the water tank on the PDDA contained water plus detergent. Some of the gunk solution seeped into the tank creating a white emulsion of water, detergent, gunk and cleaning solvent. It was found that this solution was excellent for removal of the gunk. However, it required a light rinse with water and detergent, otherwise a spotted residue was noted on the aircraft in limited areas.

The final survey of the aircraft was then taken either in the decontamination area or at a distance from it depending on the increase in background of the decontamination area.

The hottest spots of Queball #1 of Shot #2 were washed three times for experimental purposes. The only variation from standard procedure was the increase in volume of water at one time. In the place of the normal two streams, four streams of water plus detergent were used. An additional 600 - 800 gallons of water plus detergent were used in the third wash.

In two cases the lower cowling was removed to afford better drainage and better accessibility to the honey-combed section of the B-29 engine cooling system.

Upon completion of the decontamination, the aircraft was towed to its normal parking area.

Prior to release, all aircraft participating in OPERATION RANGER were completely monitored and the results obtained were made a permanent part of the aircrafts' record.

[redacted]

[redacted]

DETAILED SUMMARY

OF

RESULTS

[redacted]

[redacted]

DETAILED DISCUSSION OF RESULTS

The over-all results obtained exceeded expected results to a large degree and are better than indicated. This is explained by the high percentage of decontamination achieved on Shots #1 and #2 where personnel performing the decontamination were highly interested in their work. However, with Shots #3, #4, and #5 where the novelty had worn off and the personnel were physically tired, the decontamination was lower than on Shots #1 and #2. The over-all results which represent an average decontamination for the five shots are lower than they should be if monotony and fatigue had not entered the picture.

Also, the degree of original contamination plays an important part in the final determination of over-all effectiveness. It is well known that the law of diminishing returns applies and that efforts are wasted in trying to decontaminate when the intensity of the plane is 10 mr or lower. Therefore, if the original average intensity of the plane is 50 mr and the plane is decontaminated to 10 mr, then the average effective decontamination is 80%; whereas, if the original contamination was 100 mr and again decontaminated to 10 mr, then the over-all effective decontamination is 90%. The end result is the same and one would be just as useful to the Air Force as the other though the percentage of effectiveness is lower; therefore, the figures have essentially misrepresented the true facts. A counterpart of this example actually occurred in the tabulated results of Shot #1 and Shot #5.

The highest contamination of any plane was Queball #1 of Shot #1. It had a high of 2500 mr/hr and an average of 727 mr/hr for the entire aircraft. This plane actually penetrated the visible cloud a short time after detonation. In comparison the least contaminated aircraft was Queball #2 of Shot #5 which had a high of 290 mr/hr and an average of only 53.5 mr/hr. On all the other shots, the sampling aircraft had an average contamination of 154 mr/hr to 179 mr/hr.

The first washing of the aircraft removed an over-all average of 65.3% of the contamination present at the start of decontamination with a maximum efficiency of 87.1% and a minimum of 55.7%. The over-all results were also effected (being lower than they should have been) by the factors previously mentioned. The average time required for first washing was approximately one hour.

The second washing removed an over-all average of 43.2% of the contamination present at the start of decontamination with a maximum removal of 55.3% and a minimum of 33.1%. Again the average time for decontamination was approximately one hour.

[redacted]

[redacted]

The engines only of Queball #1 of Shot #2 were washed a third time for experimental data. Twice the normal volume of water was applied in the same time as required for a normal volume. This reduced the average aircraft intensity from 22.0 mr/hr to 11.5 mr/hr which was a significant reduction.

The average over-all effectiveness of decontamination by the first and second washing was 81.6% with the best result being the 92.2% obtained on Queball #2, Shot #1. The lowest result was 75.3% on Queball #2, Shot #3. The original intensities and the human factor again apply to the results obtained. All of the above calculations are based on the radioactivity actually removed by decontamination, thereby eliminating the effect of normal decay on the calculated efficiency of the procedure.

The over-all percentage of original contamination removed by decontamination and decay ranged from 86.7% to 97.7%, with an average of 93.0%.

The average time required to complete one survey of the aircraft was from 15 to 20 minutes. Normally three surveys were made on an aircraft that had undergone decontamination and the total time required for these was approximately one hour. The over-all average time required for decontamination was approximately three hours.

It was necessary to perform a fourth survey on Queball #1, Shot #3, because it was discovered that the background in the decontamination area was increasing the over-all readings of the aircraft. The survey was made after the aircraft had been towed out of the decontamination area. For succeeding shots, the final survey was taken outside the decontamination area.

Prior to the release of the aircraft for return to their home base, all were completely monitored. With the exception of two aircraft (B-29 No 263459 and B-29 No 521833) all aircraft could be considered to be approximately background. On the B-29 No 263459 the average intensity was 6.4 mr/hr, with a range of 20 mr/hr to background. On aircraft B-29 No 521833 the average intensity was 2.0 mr/hr, with a range of 6.0 mr/hr to background.

On 7 February 1951 a detailed area survey was made (see Tab F),and the entire area with the exception of the actual decontamination area was background. The decontamination area varied from 2.0 mr/hr to 20.0 mr/hr. This indicated that decay played an important part in keeping the intensity of the area down and that with a relative short time, the area would be only slightly above normal background.

[redacted]

[redacted]

GRAPHS OF EFFECTIVENESS OF DECONTAMINATION

[redacted]

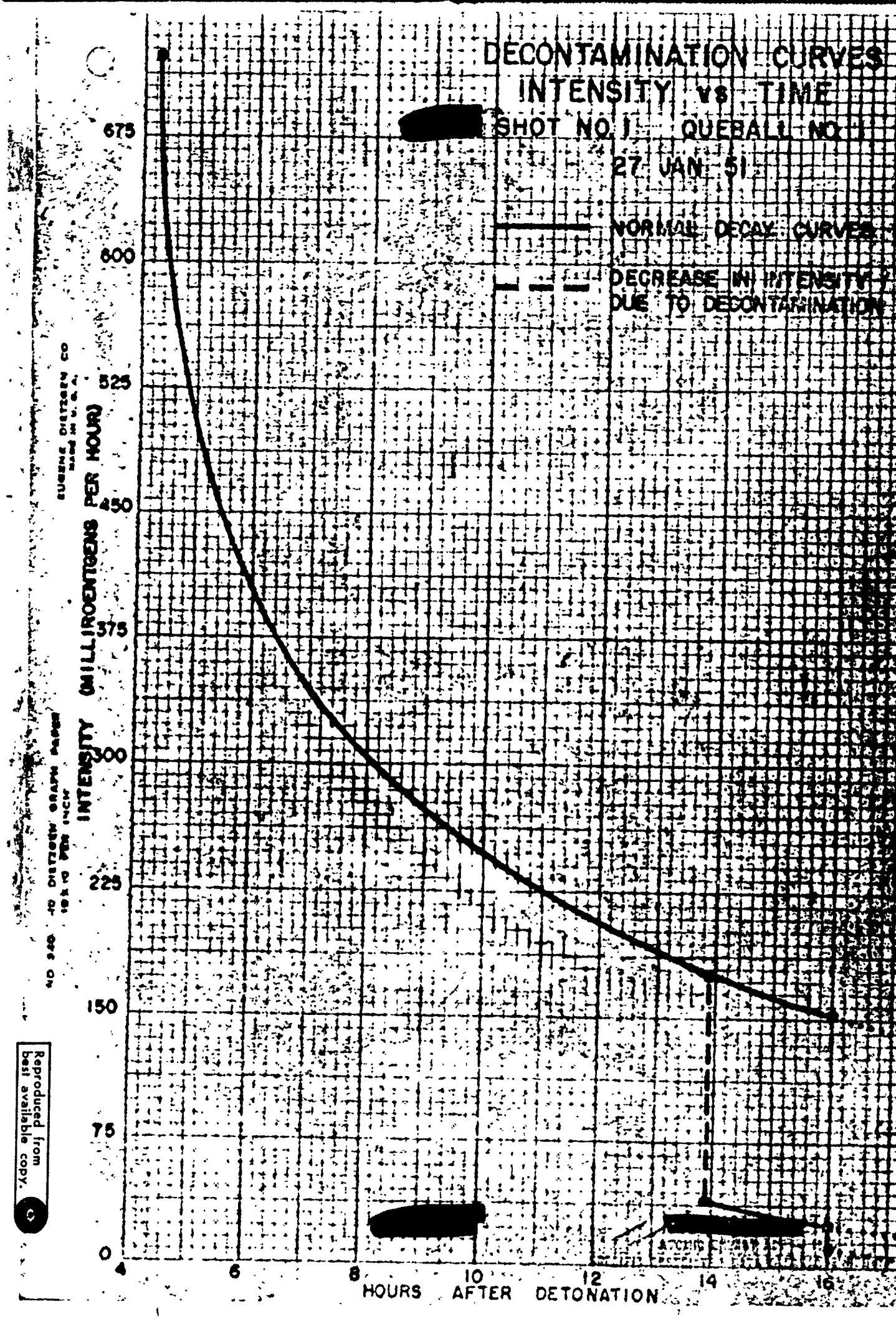

Reproduced from best available copy.

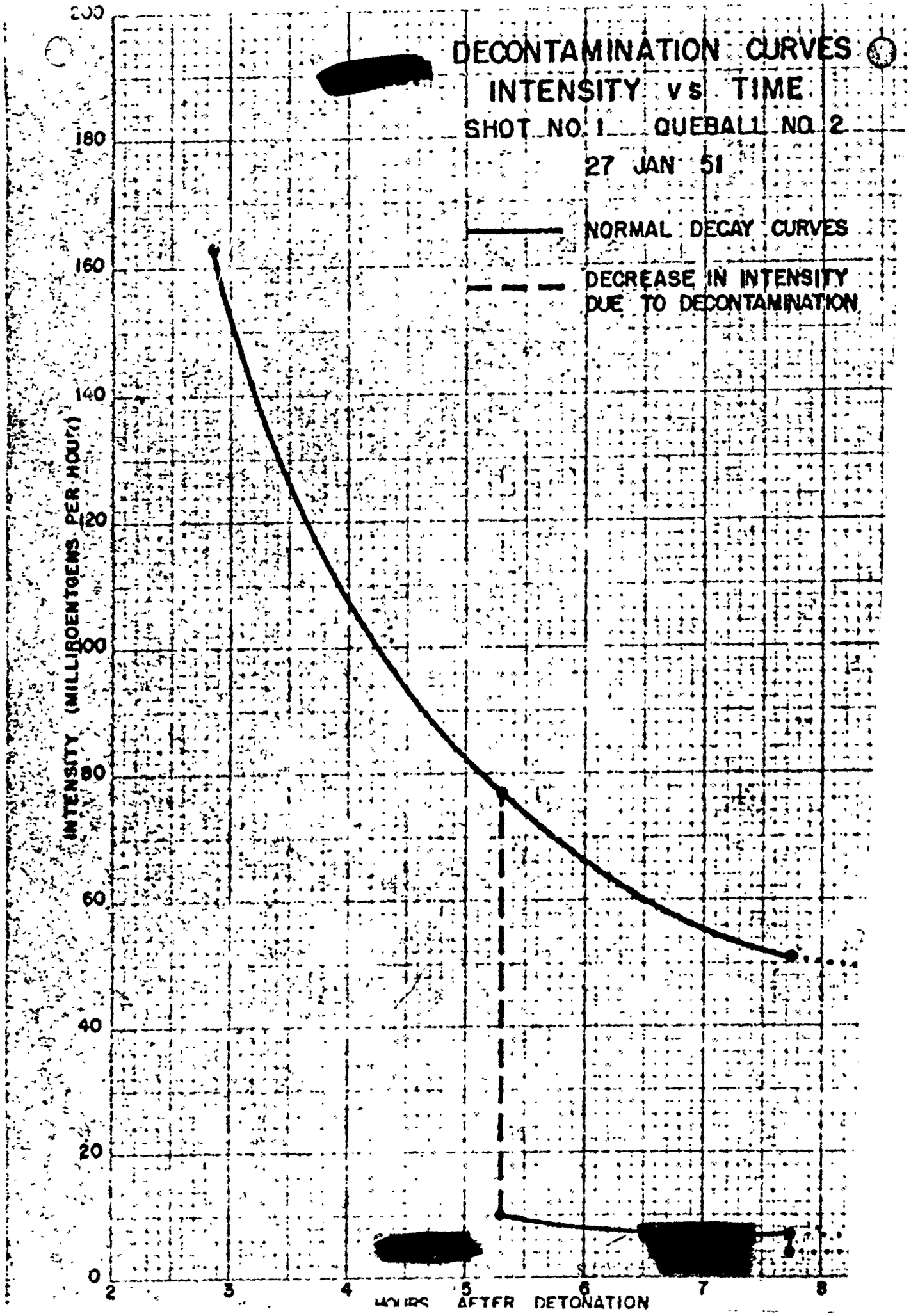
DECONTAMINATION CURVES
INTENSITY vs TIME
SHOT NO. 1 QUEBALL NO. 2
27 JAN 51
NORMAL DECAY CURVES
DECREASE IN INTENSITY DUE TO DECONTAMINATION
INTENSITY (MILLIROENTGENS PER HOUR)
200
180
160
140
120
100
80
60
40
20
0
2
3
4
5
6
7
8
HOURS AFTER DETONATION

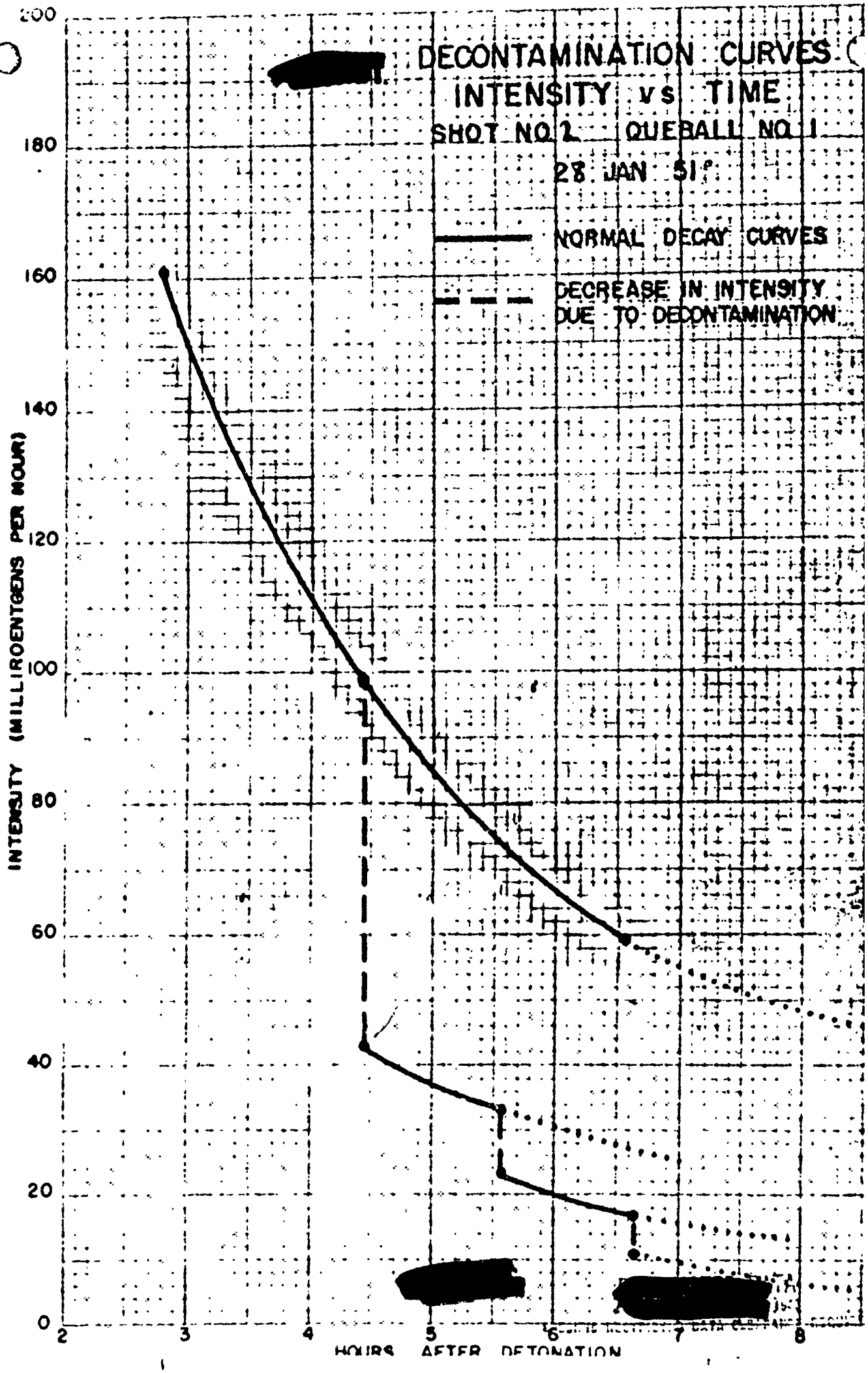
DECONTAMINATION CURVES
INTENSITY vs TIME
SHOT NO 2 QUEBALL NO 1
28 JAN 51
NORMAL DECAY CURVES
DECREASE IN INTENSITY DUE TO DECONTAMINATION
INTENSITY (MILLIROENTGENS PER HOUR)
HOURS AFTER DETONATION
200
180
160
140
120
100
80
60
40
20
0
2
3
4
5
6
7
8

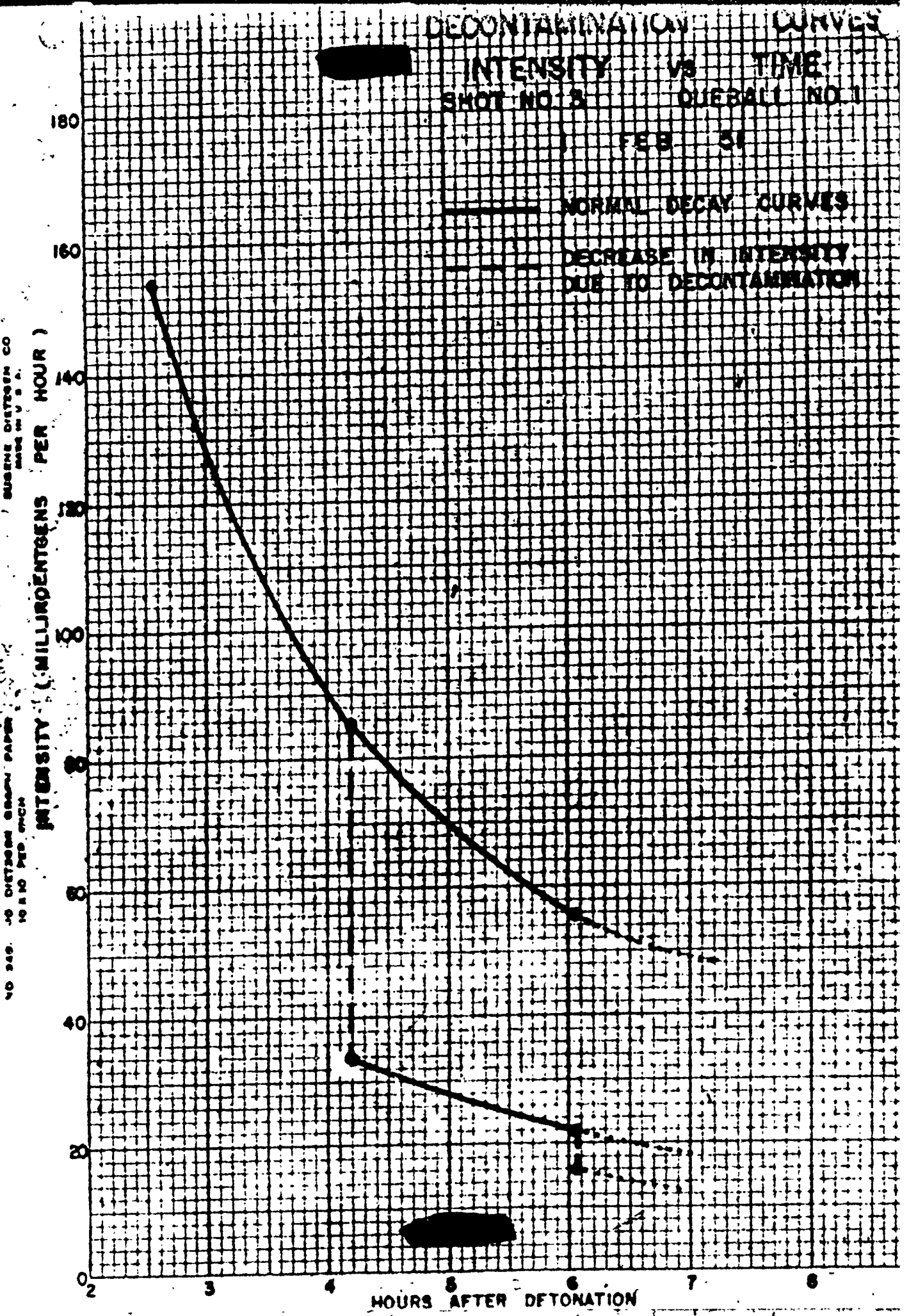
DECONTAMINATION CURVES
[redacted]
INTENSITY VS TIME
SHOT NO. 3
QUEBALL NO. 1
FEB 51
NORMAL DECAY CURVES
DECREASE IN INTENSITY DUE TO DECONTAMINATION
INTENSITY (MILLIRÖENTGENS PER HOUR)
180
160
140
120
100
80
60
40
20
0
2
3
4
5
6
7
8
HOURS AFTER DETONATION
[redacted]

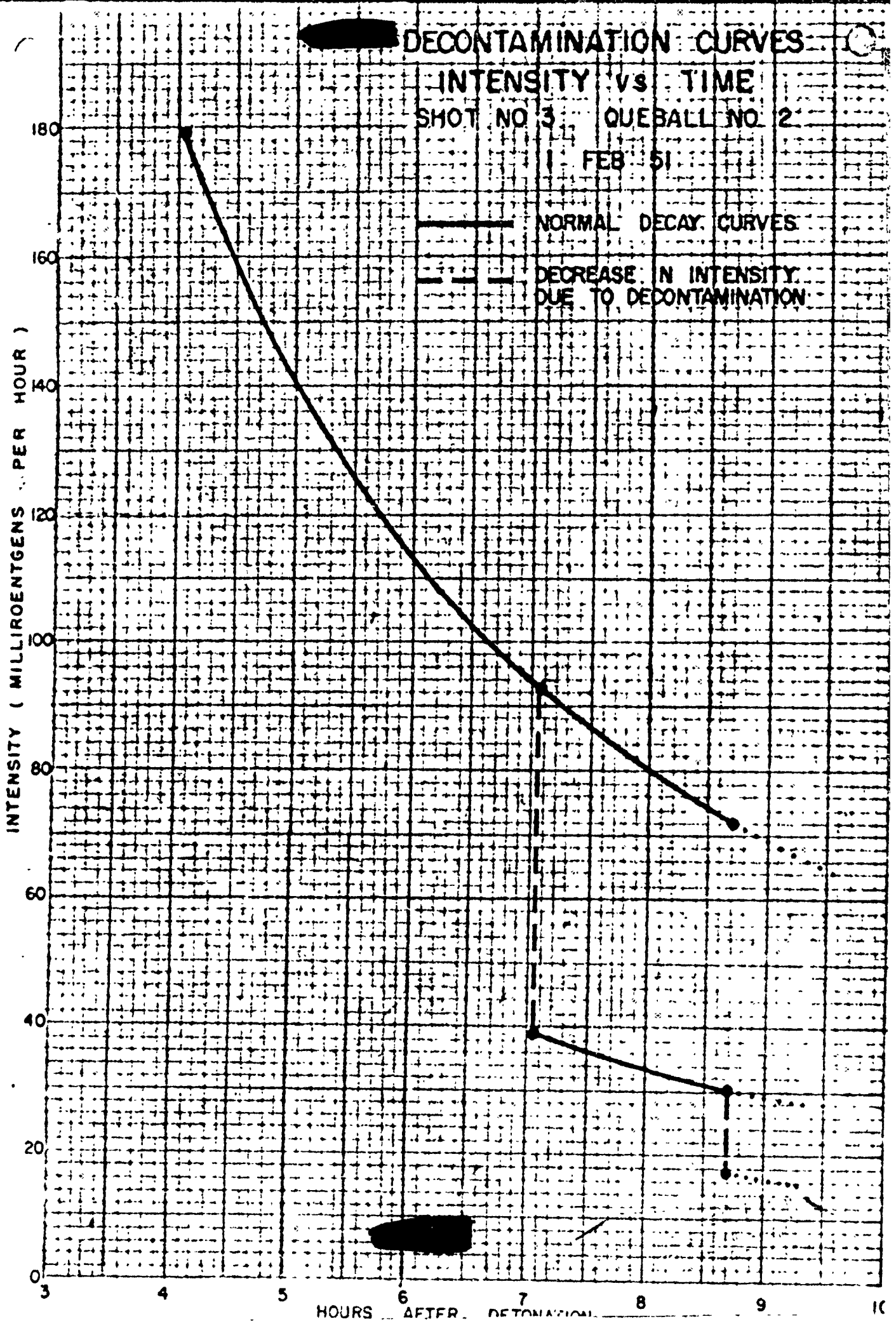
[redacted] DECONTAMINATION CURVES
INTENSITY vs TIME
SHOT NO 3 QUEBALL NO 2
1 FEB 51
NORMAL DECAY CURVES
DECREASE IN INTENSITY DUE TO DECONTAMINATION
INTENSITY (MILLIROENTGENS PER HOUR)
0
20
40
60
80
100
120
140
160
180
3
4
5
6
7
8
9
10
HOURS AFTER DETONATION
[redacted]

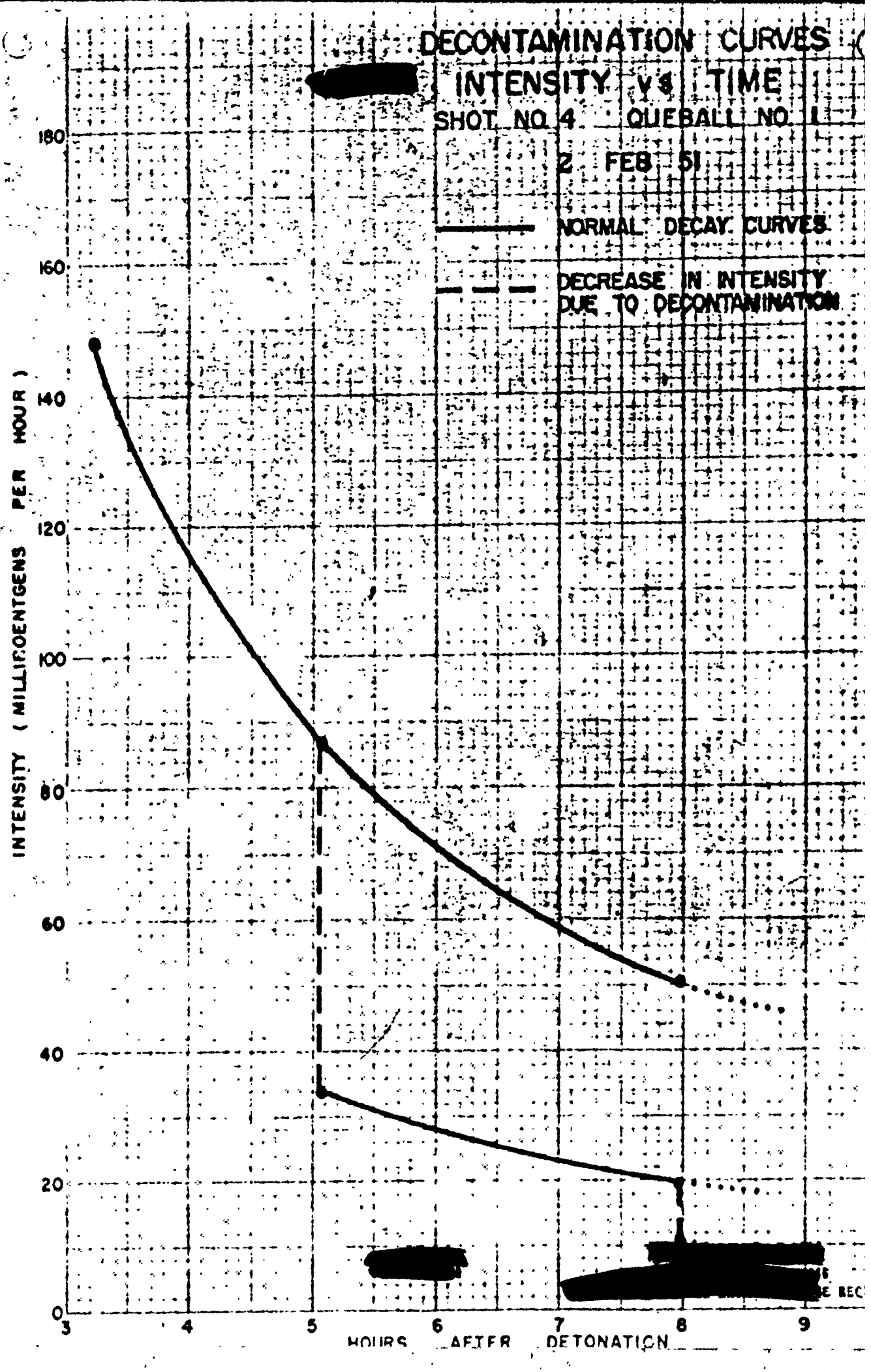

Reproduced from best available copy.

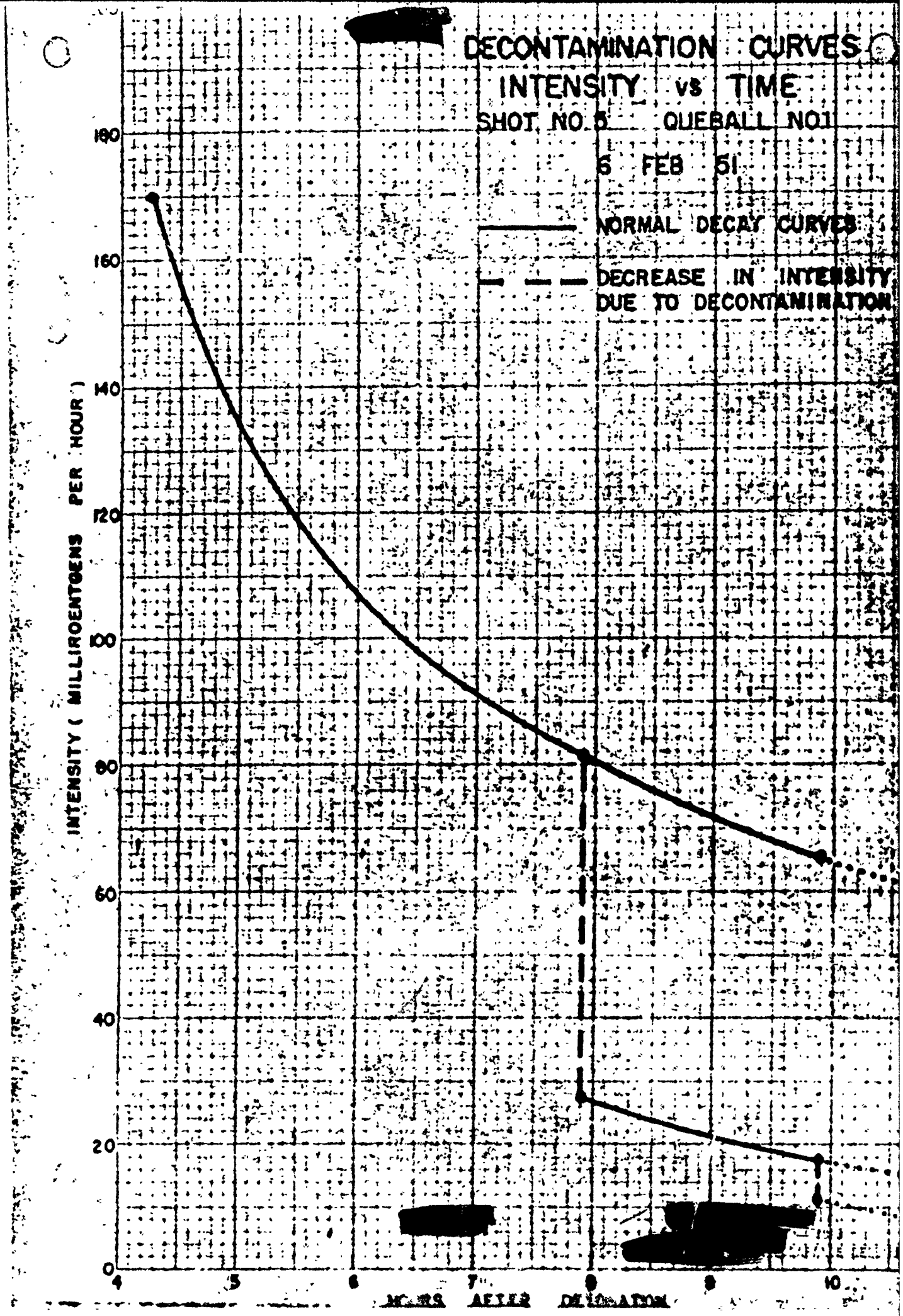
DECONTAMINATION CURVES
INTENSITY vs TIME
SHOT NO 5 QUEBALL NO1
6 FEB 51
NORMAL DECAY CURVES
DECREASE IN INTENSITY DUE TO DECONTAMINATION
INTENSITY (MILLIROENTGENS PER HOUR)
180
160
140
120
100
80
60
40
20
0
4
5
6
7
8
9
10
HOURS AFTER DETONATION

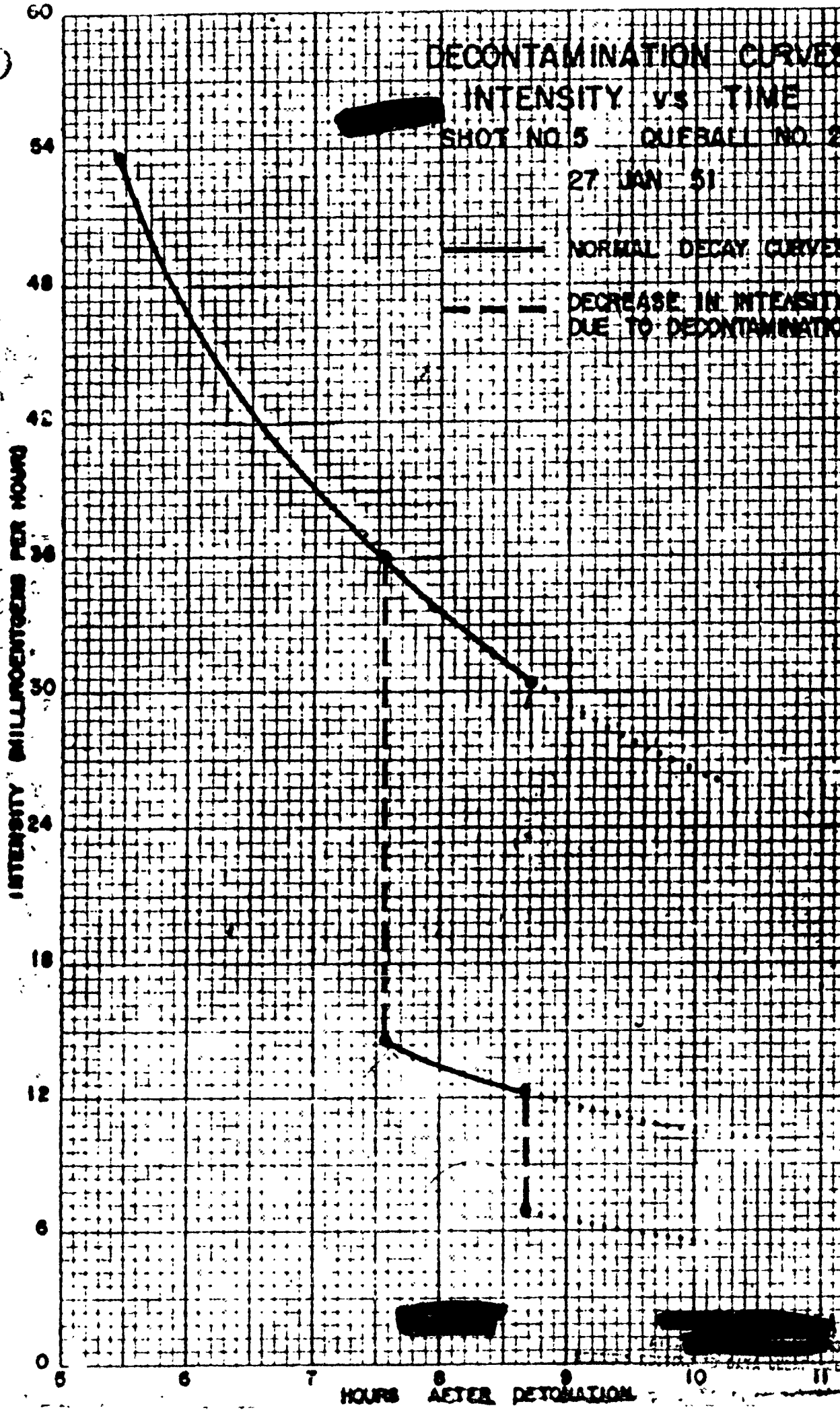
DECONTAMINATION CURVE
INTENSITY VS TIME
SHOT NO 5 QUEBALL NO 2
27 JAN 51
NORMAL DECAY CURVE
DECREASE IN INTENSITY
DUE TO DECONTAMINATION
INTENSITY MILLIROENTGENS PER HOUR
60
54
48
42
36
30
24
18
12
6
0
5
6
7
8
9
10
11
HOURS AFTER DETONATION

[redacted]

DETAILED CALCULATIONS

[redacted]

[redacted]

DATA SHEET

Shot #1
Queball #1

Date 27 Jan 51
Aircraft No. 521833

Average intensity 1st survey = 726.9 or 727 mr/hr
Average intensity 2nd survey = 45.4 or 45 mr/hr
Average intensity 3rd survey = 17.0 or 17 mr/hr

Average time of 1st survey	1000 hrs
Average time of 2nd survey	1940 hrs
Average time of 3rd survey	2155 hrs

Time for 1st wash	55 min	
Time for 2nd wash	65 min	
Total washing time		120 min

Time for 1st survey	20 min	
Time for 2nd survey	20 min	
Time for 3rd survey	20 min	
Total survey time		60 min

Total time for decontamination	180 min

Highest intensity 1st survey	2500 mr/hr
Lowest intensity 1st survey	170 mr/hr
Highest intensity 2nd survey	145 mr/hr
Lowest intensity 2nd survey	5 mr/hr
Highest intensity 3rd survey	60 mr/hr
Lowest intensity 3rd survey	2.5 mr/hr

[redacted]

[redacted]

CALCULATIONS

All the calculations made were based on the average time of the surveys of the aircraft in order to calculate the decay as accurately as possible. For example, if the first survey was started at 0900 and finished at 0920, the time for calculation purpose was 0910.

The time of detonation for all shots was considered to be either 0545 or 0546.

The drop in intensity of the radiation due to decay was calculated either from the average time of the second or third survey. For example, if the average time of the first survey was 0910 and the average time of the second survey was 1110, then utilizing the decay equation

$$I_y = I_x \left(\frac{t_x}{t_y}\right)^{1.2}$$

t_x would be 0910 and t_y would be 1110 both times actually being expressed in hours expired since detonation. I_x was the average intensity obtained during the first survey and I_y being that intensity which would have been present at second survey had no decontamination taken place.

Effectiveness calculations were based on the following relationship:

$$\% \text{ Removed} = 100 - \left(\frac{I_y \text{ actual}}{I_y \text{ calculated}} \times 100\right)$$

To calculate the over-all effectiveness due to decay and decontamination, the average intensity of the first survey was compared to the average intensity of the third survey.

The graphs found in Tab D show graphically the results of all effectiveness calculations.

[redacted]

[redacted]

CALCULATIONS (continued)

$\frac{17.0 \text{ mr/hr}}{152 \text{ mr/hr}} \times 100 = 11.1\%$

100.0% - 11.1% = 88.9% of contamination present at start of decontamination removed by 1st and 2nd washing.

$I_y = I_x \left(\frac{t_x}{t_y}\right)^{1.2}$

$= 45 \left(\frac{13.92}{16.00}\right)^{1.2} = 45 \times (0.87)^{1.2} = 45 \times 0.845$

= 38 mr/hr Intensity of aircraft due to decay between 2nd and 3rd survey

$\frac{17 \text{ mr/hr}}{38 \text{ mr/hr}} \times 100 = 44.7\%$ of contamination present during 2nd washing remaining after decontamination completed.

100.0% - 44.7% = 55.3% of contamination present during 2nd washing removed by 2nd washing.

$\frac{17.0 \text{ mr/hr}}{727 \text{ mr/hr}} \times 100 = 2.3\%$ of original contamination remaining after decontamination.

100.0% - 2.3% = 97.7% of original contamination removed by decontamination and decay. (By "original cont" is meant contamination observed at 1st survey, at 4.25 hrs)

[redacted]

[redacted]

DATA SHEET

Shot #1
Queball #2

Date 27 Jan 51
Aircraft No. 521831

Average intensity 1st survey = 162.9 or 163 mr/hr
Average intensity 2nd survey = 9.9 or 10.0 mr/hr
Average intensity 3rd survey = 3.96 or 4.0 mr/hr

Average time of 1st survey		0838 hrs
Average time of 2nd survey		1105 hrs
Average time of 3rd survey		1320 hrs
Time for 1st wash	65 min	
Time for 2nd wash	55 min	
Total washing time		120 min
Time for 1st survey	15 min	
Time for 2nd survey	20 min	
Time for 3rd survey	20 min	
Total survey time		55 min
Total time for decontamination		175 min
Highest intensity 1st survey		500 mr/hr
Lowest intensity 1st survey		28 mr/hr
Highest intensity 2nd survey		50 mr/hr
Lowest intensity 2nd survey		1 mr/hr
Highest intensity 3rd survey		14 mr/hr
Lowest intensity 3rd survey		0.5 mr/hr

[redacted]

[redacted]

CALCULATIONS

Queball No. 2

Average time 1st survey
Stop 0845 hrs
Start 0830 hrs
Diff. 15 min

Average 0838 hrs

Average time 2nd survey
Stop 1115 hrs
Start 1055 hrs
Diff. 20 min

Average 1105 hrs

Average time 3rd survey
Stop 1330 hrs
Start 1310 hrs
Diff. 20 min

Average 1320 hrs

Shot No. 1

Average time 1st survey 0838 hrs
Time of detonation 0546 hrs
Total time difference 2 hrs 52 min
or 2.87 hrs

Average time 2nd survey 1105 hrs
Time of detonation 0546 hrs
Total time difference 5 hrs 19 min
or 5.32 hrs

Average time 3rd survey 1320 hrs
Time of detonation 0546 hrs
Total time difference 7 hrs 34 min
or 7.57 hrs

$$I_y = I_x \left(\frac{t_r}{t_y}\right)^{1.2}$$

$$= 163 \left(\frac{2.87}{5.32}\right)^{1.2} = 163 \times (.539)^{1.2} = 0.476$$

= 77.6 mr/hr (Intensity of aircraft at 1105 hrs due to normal decay without decontamination)

$$\frac{10 \text{ mr/hr}}{77.6 \text{ mr/hr}} \times 100 = 12.9\%$$

100.0% - 12.9% = 87.1% of contamination present at start of decontamination removed by first wash

$$I_y = I_x \left(\frac{t_x}{t_y}\right)^{1.2}$$

$$= 163 \left(\frac{2.87}{7.57}\right)^{1.2} = 163 \times (.379)^{1.2} = 163 \times .313$$

≈ 51 mr/hr (Intensity of aircraft at 1320 hrs due to normal decay without decontamination)

[redacted]

[redacted]

CALCULATIONS (continued)

$\frac{4.0 \text{ mr/hr}}{51 \text{ mr/hr}} = 7.8\%$

100 - 7.8% = 92.2% of contamination present at start of decontamination removed by 1st and 2nd washing.

$Iy = Ix \left(\frac{tx}{ty}\right)^{1.2}$

$Iy = 10 \left(\frac{5.32}{7.57}\right)^{1.2} = 10 \times (0.703)^{1.2} = 10 \times 0.657$

Iy = 6.6 mr/hr Intensity of aircraft due to decay between 2nd and 3rd survey.

$\frac{40 \text{ mr/hr}}{6.6 \text{ mr/hr}} \times 100 = 60.6\%$ of contamination present during 2nd washing remaining after decontamination completed.

100.0% - 60.6% = 39.4% of contamination present during 2nd washing removed by 2nd washing.

$\frac{4.0 \text{ mr/hr}}{163 \text{ mr/hr}} \times 100 = 2.5\%$ of original contamination remaining after decontamination completed

100.0% - 2.5% = 97.5% of original contamination removed by decontamination and decay.

[redacted]

[redacted]

DATA SHEET

Shot #2
Queball #1

Date 28 Jan 51
Aircraft No. 521831

Average intensity	1st	survey	161.59 or	162 mr/hr
"	"	2nd "	43.83 or	44 mr/hr
"	"	3rd "	21.76 or	22 mr/hr
* "	"	4th "	11.53 or	11.5 mr/hr

Average time 1st survey	0840 hrs
" " 2nd "	1008 hrs
" " 3rd "	1120 hrs
* " " 4th "	1230 hrs

Time for 1st wash	45 min.	
" " 2nd wash	50 min.	
" " 3rd wash	30 min.	
Total washing time		125 min.

Time for 1st survey	20 min.	
" " 2nd "	15 min.	
" " 3rd "	20 min.	
" " 4th "	10 min.	
Total survey time		65 min.
Total time for decontamination		190 min.

Highest intensity 1st survey	850 mr/hr
Lowest " " "	20 mr/hr
Highest intensity 2nd survey	110 mr/hr
Lowest " " "	10 mr/hr
Highest intensity 3rd survey	55 mr/hr
Lowest " " "	8 mr/hr
Highest intensity 4th survey	25 mr/hr
Lowest " " "	1 mr/hr

*The engines (only) were washed with approximately 700 gallons of water plus detergent for thirty minutes. The engines then remonitored and recorded. To obtain the average intensity of other monitoring points the decay equation was utilized and points calculated.

[redacted]

[redacted]

CALCULATIONS

Queball No. 1

Average time 1st survey
Stop 0850 hrs
Start 0830 hrs
Diff. 20 min

Average 0840 hrs

Average time 2nd survey
Stop 1015 hrs
Start 1000 hrs
Diff. 15 min

Average 1008 hrs

Average time 3rd survey
Stop 1130 hrs
Start 1110 hrs
Diff. 20 min

Average 1120 hrs

Average time 4th survey
Stop 1235 hrs
Start 1225 hrs
Diff. 10 min

Average 1230 hrs

Shot No. 2

Average time 1st survey 0840 hrs
Time of detonation 0546 hrs
Total time difference 2 hrs 52 min
or 2.87 hrs

Average time 2nd survey 1008 hrs
Time of detonation 0546 hrs
Total time difference 4 hrs 22 min
or 4.37 hrs

Average time 3rd survey 1120 hrs
Time of detonation 0546 hrs
Total time difference 5 hrs 34 min
or 5.57 hrs

Average time 4th survey 1230 hrs
Time of detonation 0546 hrs
Total time difference 6 hrs 44 min
or 6.73 hrs

$$I_y = I_x \left(\frac{t_x}{t_y}\right)^{1.2}$$

$$= 162 \left(\frac{2.90}{4.37}\right)^{1.2} = 162\,(0.664)^{1.2} = 162 \times 0.612$$

= 99.2 mr/hr (Intensity of aircraft at 1008 hrs due to normal decay without decontamination)

$$\frac{44 \text{ mr/hr}}{99.2 \text{ mr/hr}} \times 100 = 44.3\%$$

100.0% - 44.3% = 55.7% of contamination present at start of decontamination removed by 1st wash

[redacted]

[redacted]

$$I_y = I_x \left(\frac{t_x}{t_y}\right)^{1.2}$$

$$= 162 \left(\frac{2.90}{5.57}\right) = 162 \times (0.521)^{1.2} = 162 \times 0.46$$

= 74.5 mr/hr (Intensity of aircraft at 1120 hrs. due to normal decay - without decontamination)

$$\frac{22 \text{ mr/hr}}{74.5 \text{ mr/hr}} \times 100 = 29.5\%$$

100.0% - 29.5 = 70.5% of contamination present at start of decontamination removed by 1st and 2nd washings.

$$I_y = I_x \left(\frac{t_x}{t_y}\right)^{1.2}$$

$$= 44 \left(\frac{4.37}{5.57}\right)^{1.2} = 44 \times (0.785)^{1.2} = 44. \times 0.748$$

= 32.9 mr/hr Intensity of aircraft due to decay between 2nd and 3rd survey

$$\frac{22 \text{ mr/hr}}{32.9 \text{ mr/hr}} \times 100 = 66.9\%$$ of contamination present during 2nd washing remaining after 2nd washing

100.0% - 66.9% = 33.1% of contamination present during 2nd washing removed by 2nd washing.

$$I_y = I_x \left(\frac{t_x}{t_y}\right)^{1.2}$$

$$= 162. \left(\frac{2.90}{6.73}\right) = 162 \times (0.431)^{1.2} = 162 \times .0365$$

= 59.1 mr/hr (Intensity of aircraft at 1230 hours due to normal decay without decontamination)

$$\frac{11.5 \text{ mr/hr}}{59.1 \text{ mr/hr}} \times 100 = 19.5\%$$

100.0% - 19.5 = 80.5% of contamination present at start of decontamination removed by 1st, 2nd and 3rd washings.

$$I_y = I_x \left(\frac{t_x}{t_y}\right)^{1.2}$$

$$= 22 \times \left(\frac{5.57}{6.73}\right) = 22 \times (0.828)^{1.2} = 22 \times 0.797$$

= 17.6 mr/hr Intensity of aircraft due to decay between 3rd and 4th survey

[redacted]

[redacted]

$\frac{11.5 \text{ mr/hr}}{17.6 \text{ mr/hr}} \times 100$ = 65.3% of contamination present during 3rd washing remaining after 3rd washing.

100.0 - 65.3% = 34.7% of contamination present during 3rd washing removed by 3rd washing

$\frac{11.5 \text{ mr/hr}}{162. \text{ mr/hr}} \times 100$ = 7.1% of original contamination remaining after decontamination completed

100.0% - 7.1% = 92.9% of original contamination removed by decontamination and decay.

[redacted]

[redacted]

Data Sheet

Shot #3
Queball #1

Date 1 February 1951
Aircraft No. 521831

Average intensity 1st survey 153.5 or 154 mr/hr
Average intensity 2nd survey 33.6 or 33.6 mr/hr
Average intensity 3rd survey 15.8 or 15.8 mr/hr
Average intensity 4th survey
considering increase in background 11.8 or 11.8 mr/hr

Average time 1st survey		0820 hrs
" " 2nd survey		0958 "
" " 3rd survey		1150 "
Time for 1st washing	65 min.	
" " 2nd washing	70 min.	
Total washing time		135 min.
Time for 1st survey	20 min.	
" " 2nd survey	15 min.	
" " 3rd survey	20 min.	
Total survey time		55 min.
Total time for decontamination		190 min.
Highest intensity 1st survey		680 mr/hr
Lowest intensity 1st survey		36 mr/hr
Highest intensity 2nd survey		110 mr/hr
Lowest intensity 2nd survey		9 mr/hr
Highest intensity 3rd survey		30 mr/hr
Lowest intensity 3rd survey		4 mr/hr

[redacted]

[redacted]

CALCULATIONS

Queball #1

Average time 1st survey
Stop 0830 hrs
Start 0810 hrs
Diff. 20 min.

Average 0820 hrs

Average time 2nd survey
Stop 1005 hrs
Start 0950 hrs
Diff. 15 min.

Average 0958 hrs

Average time 3rd survey
Stop 1200 hrs
Start 1140 hrs
Diff. 20 min

Average 1150 hrs.

Shot No. 3

Average time 1st survey 0820 hrs
Time of detonation 0546 hrs
Total time difference 2 hrs34 min
or 2.57 hrs

Average time 2nd survey 0958 hrs
Time of detonation 0546 hrs
Total time difference 4 hrs12 min
or 4.20 hrs

Average time 3rd survey 1150 hrs
Time of detonation 0546 hrs
Total time difference 6 hrs 4 min.
or 6.07 hrs

$$I_y = I_x \left(\frac{t_x}{t_y}\right)^{1.2}$$

$$= 154 \left(\frac{2.57}{4.20}\right)^{1.2} = 154 \times (0.612)^{1.2} = 154 \times 0.556$$

= 85.6 mr/hr (Intensity of aircraft at 0958 hrs due to normal decay - without decontamination)

$$\frac{33.6 \text{ mr/hr}}{85.6 \text{ mr/hr}} \times 100 = 39.3\%$$

100 - 39.3% = 60.7% of contamination present at start of decontamination removed by 1st wash

$$I_y = I_x \left(\frac{t_x}{t_y}\right)^{1.2}$$

$$= 154 \left(\frac{2.57}{6.07}\right)^{1.2} = 154 \times (0.423)^{1.2} = 154 \times 0.359$$

= 55.3 mr/hr (Intensity of aircraft at 1150 hrs due to normal decay - without decontamination)

$$\frac{15.8 \text{ mr/hr}}{55.3 \text{ mr/hr}} \times 100 = 28.6\%$$

100.0% - 28.6% = 71.4% of contamination present at start of decontamination removed by 1st and 2nd washings

[redacted]

[redacted]

Taking into consideration the 4 mr/hr increase in background of the decontamination area and calculating the overall effectiveness of decontamination then.

15.8 mr/hr - 4 mr/hr = 11.8 mr/hr and the overall efficiency would be

$$\frac{11.8 \text{ mr/hr}}{55.3 \text{ mr/hr}} \times 100 = 21.3\%$$

100.0 - 21.3% = 78.7% decontamination by 1st and 2nd washings

$$I_y = I_x \left(\frac{t_x}{t_y}\right)^{1.2}$$

$$= 33.6 \left(\frac{4.20}{6.07}\right)^{1.2} = 33.6 \times (0.692)^{1.2} = 33.6 \times 0.641$$

$$= 21.6 \text{ mr/hr}$$

$$\frac{15.8 \text{ mr/hr}}{21.6 \text{ mr/hr}} \times 100 = 73.1\%$$ of contamination present during 2nd washing remaining after 2nd washing

100.0 - 73.1 = 26.9% of contamination present during 2nd washing removed by 2nd washing.

If background is considered then

$$\frac{11.8 \text{ mr/hr}}{21.6 \text{ mr/hr}} \times 100 = 54.6 \text{ of}$$

100.0% - 54.6% = 45.4% of contamination removed.

$$\frac{11.8 \text{ mr/hr}}{154 \text{ mr/hr}} \times 100 = 7.7\%$$ of original contamination remaining after decontamination completed

100.0% - 7.7% = 92.3% of original contamination removed by decontamination and decay

[redacted]

[redacted]

CALCULATIONS

Queball No. 1

Average time 1st survey
Stop 1010 hrs
Start 0950 hrs
Diff. 20 min

Average 1000 hrs

Average time 2nd survey
Stop 1950 hrs
Start 1930 hrs
Diff. 20 min

Average 1940 hrs

Average time 3rd survey
Stop 2155 hrs
Start 2135 hrs
Diff. 20 min

Average 2145 hrs

Shot No. 1

Average time 1st survey 1000 hrs
Time of detonation 0545 hrs
Table time difference 4 hrs. 15 min
or 4.25 hrs

Average time 2nd survey 1940 hrs
Time of detonation 0545 hrs
Total time difference 13 hrs 55 min
or 13.92 hrs

Average time 3rd survey 2145 hrs
Time of detonation 0545 hrs
Table time difference 16 hrs 0 min
or 16.0 hrs

$$I_y = I_x \left(\frac{t_x}{t_y}\right)^{1.2}$$

$$= 727 \left(\frac{4.25}{13.92}\right)^{1.2} = 727 \times (.305)^{1.2} = 727 \times 0.242$$

= 176 mr/hr (Intensity of aircraft at 1940 hrs due to normal decay without decontamination)

$$\frac{45 \text{ mr/hr}}{176 \text{ mr/hr}} \times 100 = 25.6\%$$

100.0% - 25.6% = 74.4% of contamination present at start of decontamination removed by 1st wash

$$I_y = I_x \left(\frac{t_x}{t_y}\right)^{1.2}$$

$$= 727 \left(\frac{4.25}{16.0}\right)^{1.2} = 727 \times (.266)^{1.2} = 727 \times (.209)$$

= 152 mr/hr (Intensity of aircraft at 2145 hrs due to normal decay without decontamination)

[redacted]

[redacted]

DATA SHEET

Shot #3
Queball #2

Date 1 February 1951
Aircraft No. 521833

Average intensity 1st survey	178.9 or 179 mr/hr
Average intensity 2nd survey	39.4 or 39 mr/hr
Average intensity 3rd survey	17.8 or 17.8 mr/hr
Average time 1st survey	0950 hrs
Average time 2nd survey	1250 hrs
Average time 3rd survey	1428 hrs
Time for 1st washing	80 mins
Time for 2nd washing	45 mins
Total washing time	125 mins
Time for 1st survey	20 mins
Time for 2nd survey	20 mins
Time for 3rd survey	15 mins
Total survey time	55 min.
Total time for decontamination	180 min.
Highest intensity 1st survey	600 mr/hr
Lowest intensity 1st survey	40 mr/hr
Highest intensity 2nd survey	100 mr/hr
Lowest intensity 2nd survey	12 mr/hr
Highest intensity 3rd survey	40 mr/hr
Lowest intensity 3rd survey	4 mr/hr

[redacted]

[redacted]

CALCULATIONS

Queball No. 2

Average time 1st survey
Stop 1000 hrs
Start 0940 hrs
Diff. 20 min
Average 0950

Average time 2nd survey
Stop 1300 hrs
Start 1240 hrs
Diff. 20 min
Average 1250 hrs

Average time 3rd survey
Stop 1435 hrs
Start 1420 hrs
Diff. 15 min
Average 1428

Shot No. 3

Average time 1st survey 0950 hrs
Time of detonation 0546 hrs
Total time difference 4 hrs 4 min
or 4.07 hrs

Average time 2nd survey 1250 hrs
Time of detonation 0546 hrs
Total time difference 7 hrs 4 mins
or 7.07 hrs

Average time 3rd survey 1428
Time of detonation 0546
Total time difference 8 hrs42 min
or 8.70 hrs

$$I_y = I_x \frac{(t_x)}{(t_y)}^{1.2}$$

$$= 179 \frac{(4.07)}{(7.07)}^{1.2} = 179 \times (.576)^{1.2} = 179 \times .519$$

= 92.9 mr/hr (Intensity of aircraft at 1250 hrs due to normal decay without decontamination)

$$\frac{39 \text{ mr/hr}}{92.9 \text{ mr/hr}} \times 100 = 42.\%$$

100.0% - 42.% = 58% of contamination present at start of decontamination removed by 1st wash

$$I_y = I_x \frac{(t_x)}{(t_y)}^{1.2}$$

$$= 179 \frac{(4.07)}{(8.70)}^{1.2} = 179 \times (0.468)^{1.2} = 179 \times 0.402$$

= 72.0 mr/hr (Intensity of aircraft at 1428 hrs due to normal decay without decontamination)

$$\frac{17.8 \text{ mr/hr}}{72.0 \text{ mr/hr}} \times 100 = 24.7\%$$

100.0% - 24.7% = 75.3% of contamination present at start of decontamination removed by 1st and 2nd washings

[redacted]

[redacted]

$$I_y = I_x \left(\frac{t_x}{t_y}\right)^{1.2}$$

$$= 39 \left(\frac{7.07}{8.70}\right)^{1.2} = 39 \times (0.813)^{1.2} = 39 \times 0.778$$

$$= 30.3 \text{ mr/hr}$$

$\frac{17.8 \text{ mr/hr}}{30.3} \times 100 = 58.7\%$ of contamination present during 2nd washing remaining after 2nd washing

$100.\% - 58.7\% = 41.3\%$ of contamination present during 2nd washing removed by 2nd washing.

$\frac{17.8 \text{ mr/hr}}{178.9 \text{ mr/hr}} \times 100 = 9.9\%$ of original contamination remaining after decontamination completed

$100.0\% - 9.9 = 90.1\%$ of original contamination removed by decontamination and decay.

[redacted]

[redacted]

DATA SHEET

Shot #4
Queball #1

Date 2 Feb 1951
Aircraft No. 44-27344A

Average intensity 1st survey		147.6 or 148 mr/hr
Average intensity 2nd survey		33.8 or 33.8 mr/hr
Average intensity 3rd survey		10.2 or 10.2 mr/hr
Average time 1st survey		0900 hrs
Average time 2nd survey		1050 hrs
Average time 3rd survey		1345 hrs
Time for 1st washing	25 min	
Time for 2nd washing	*145 min	
Total washing time		170 min
Time for 1st survey	30 min	
Time for 2nd survey	20 min	
Time for 3rd survey	30 min	
Total survey time		80 min
Total decontamination time		250 min
Highest intensity 1st survey		480 mr/hr
Lowest intensity 1st survey		22 mr/hr
Highest intensity 2nd survey		100 mr/hr
Lowest intensity 2nd survey		6 mr/hr
Highest intensity 3rd survey		30 mr/hr
Lowest intensity 3rd survey		2 mr/hr

*Time last filling and repairing decontamination apparatus.

[redacted]

[redacted]

CALCULATIONS

Queball #1

Average time 1st survey
Stop 0915 hrs
Start 0845 hrs
Diff. 30 min

Average 0900 hrs

Average time 2nd survey
Stop 1100 hrs
Start 1040 hrs
Diff. 20 min

Average 1050 hrs

Average time 3rd survey
Stop 1400 hrs
Start 1330 hrs
Diff. 30 min

Average 1345 hrs

Shot No. 4

Average time 1st survey 0900 hrs
Time of detonation 0546 hrs
Total time difference 3 hrs 14 min
or 3.23 hrs

Average time 2nd survey 1050 hrs
Time of detonation 0546 hrs
Total time difference 5 hrs 4 min
or 5.07 hrs

Average time 3rd survey 1345 hrs
Time of detonation 0546 hrs
Total time difference 7 hrs 59 min
or 7.98 hrs

$$I_y = I_x \left(\frac{t_x}{t_y}\right)^{1.2}$$

$$= 148 \times \left(\frac{3.23}{5.07}\right)^{1.2} = 148 \times (0.637)^{1.2} = 148 \times 0.534$$

= 86.4 mr/hr (Intensity of aircraft at 1050 hrs due to normal decay without decontamination)

$$\frac{33.8 \text{ mr/hr}}{86.4 \text{ mr/hr}} \times 100 = 39.1\%$$

100.0% - 39.1% = 60.9% of contamination present at start of decontamination removed by 1st washing.

$$I_y = I_x \left(\frac{t_x}{t_y}\right)^{1.2}$$

$$= 148 \left(\frac{3.23}{7.98}\right)^{1.2} = 148 \times 0.339$$

= 50.2 mr/hr (Intensity of aircraft at 1345 hrs due to normal decay without decontamination)

$$\frac{10.2 \text{ mr/hr}}{50.2 \text{ mr/hr}} \times 100 = 20.3\%$$

100.0% - 20.3% = 79.7% of contamination present at start of decontamination removed by 1st and 2nd washings.

[redacted]

[redacted]

$$I_y = I_x \left(\frac{t_x}{t_y}\right)^{1.2}$$

$$= 33.8 \left(\frac{5.07}{7.98}\right)^{1.2} = 33.8 \times (0.635)^{1.2} = 33.8 \times 0.580$$

$$= 19.6 \text{ mr/hr}$$

$\frac{10.2}{19.6} \times 100 =$ 52.0% of contamination present during 2nd washing remaining after 2nd washing.

100.0% - 52.0% = 48.0% of contamination present during 2nd washing removed by second washing.

$\frac{10.2 \text{ mr/hr}}{148 \text{ mr/hr}} \times 100 =$ 6.9% of original contamination remaining after decontamination complete

100.0% - 6.9% = 93.1% of original contamination removed by decontamination and decay.

[redacted]

[redacted]

DATA SHEET

Shot No. 5
Queball No. 1

Date 6 Feb 1951
Aircraft No. 263459

Average intensity 1st survey		170 mr/hr
Average intensity 2nd survey		27.3 mr/hr
Average intensity 3rd survey		11.3 mr/hr
Average time of 1st survey		1002 hrs
Average time of 2nd survey		1340 hrs
Average time of 3rd survey		1640 hrs
Time for 1st wash	105 min	
Time for 2nd wash	40 min	
Total washing time		145 min
Time for 1st survey	15 min	
Time for 2nd survey	20 min	
Time for 3rd survey	20 min	
Total survey time		55 min
Total time for decontamination		200 min
Highest intensity 1st survey		420 mr/hr
Lowest intensity 1st survey		34 mr/hr
Highest intensity 2nd survey		110 mr/hr
Lowest intensity 2nd survey		Background
Highest intensity 3rd survey		37 mr/hr
Lowest intensity 3rd survey		Background

[redacted]

[redacted]

CALCULATIONS

Queball #1 — Shot No. 5

Average time 1st survey		Average time 1st survey	1002 hrs
Stop	1010 hrs	Time of detonation	0546 hrs
Start	0955 hrs	Total time difference	4 hrs 16 min.
Diff.	15 min	or	4.27
Average	1002 hrs		
Average time 2nd survey		Average time 2nd survey	1340 hrs
Stop	1350 hrs	Time of detonation	0546 hrs
Start	1330 hrs	Total time difference	7 hrs 54 min
Diff.	20 min	or	7.90 hrs
Average	1340 hrs		
Average time 3rd survey		Average time 3rd survey	1640 hrs
Stop	1650 hrs	Time of detonation	0546 hrs
Start	1630 hrs	Total time difference	10 hrs 54 min
Diff.	20 min	or	10.90 hrs
Average	1640 hrs		

$$I_y = I_x \left(\frac{t_x}{t_y}\right)^{1.2}$$

$$= 170 \left(\frac{4.27}{7.90}\right)^{1.2} = 170 \times (0.541)^{1.2} = 170 \times 0.480$$

= 81.6 mr/hr (Intensity of aircraft at 1340 hrs due to normal decay without contamination)

$$\frac{27.3 \text{ mr/hr}}{81.6 \text{ mr/hr}} \times 100 = 33.5\%$$

100.0% - 33.5% = 66.5% of contamination present at start of decontamination removed by 1st washing.

$$I_y = I_x \left(\frac{t_x}{t_y}\right)^{1.2}$$

$$= 170 \left(\frac{4.27}{10.90}\right)^{1.2} = 170 \times (0.392)^{1.2} = 170 \times 0.326$$

= 55.4 mr/hr (Intensity of aircraft at 1640 hrs due to normal decay without decontamination)

$$\frac{11.3 \text{ mr/hr}}{55.4 \text{ mr/hr}} \times 100 = 20.4\%$$

100.0% - 20.4% = 79.6% of contamination present at start of decontamination removed by 1st and 2nd washings.

[redacted]

[redacted]

CALCULATIONS (Continued)

$$I_y = I_x \left(\frac{t_x}{t_y}\right)^{1.2}$$

$$= 27.3 \left(\frac{7.90}{10.90}\right)^{1.2} = 27.3 \times (0.725)^{1.2} = 27.6 \times 0.681$$

$$= 18.8 \text{ mr/hr}$$

$\frac{11.3 \text{ mr/hr}}{18.7 \text{ mr/hr}} \times 100 =$ 60.1% of contamination present during 2nd washing remaining after 2nd washing

100.0% - 60.1% = 39.9% of contamination present during 2nd washing removed by 2nd washing.

$\frac{11.3 \text{ mr/hr}}{170.0 \text{ mr/hr}} \times 100 =$ 6.6% of original contamination remaing after decontamination complete.

100.0% - 6.6% = 93.4% of original contamination removed by decontamination and decay.

[redacted]

[redacted]

DATA SHEET

Shot #5
Queball #2

Date 6 Feb 51
Aircraft No. 521833

Average intensity 1st survey = 53.5 mr/hr
Average intensity 2nd survey = 14.8 mr/hr
Average intensity 3rd survey = 7.1 mr/hr

Average time of 1st survey	1113 hrs
Average time of 2nd survey	1320 hrs
Average time of 3rd survey	1428 hrs

Time for 1st wash	30 min	
Time for 2nd wash	45 min	
Total washing time		75 min

Time for 1st survey	25 min	
Time for 2nd survey	20 min	
Time for 3rd survey	15 min	
Total survey time		60 min

Total time for decontamination 135 min

Highest intensity 1st survey	290 mr/hr
Lowest intensity 1st survey	18 mr/hr
Highest intensity 2nd survey	40 mr/hr
Lowest intensity 2nd survey	10 mr/hr
Highest intensity 3rd survey	25 mr/hr
Lowest intensity 3rd survey	Background

[redacted]

[redacted]

CALCULATIONS

Queball No. 2

Average time 1st survey
Stop 1125 hrs
Start 1100 hrs
Diff. 25 min

Average 1113 hrs

Average time 2nd survey
Stop 1330 hrs
Start 1310 hrs
Diff. 20 min

Average 1320 hrs

Average time 3rd survey
Stop 1435 hrs
Start 1420 hrs
Diff. 15 min

Average 1428 hrs

Shot No. 5

Average time 1st survey 1113 hrs
Time of detonation 0546 hrs
Total time difference 5 hrs 27 min
or 5.45 hrs

Average time 2nd survey 1320 hrs
Time of detonation 0546 hrs
Total time difference 7 hrs 34 min
or 7.57 hrs

Average time 3rd survey 1428 hrs
Time of detonation 0546 hrs
Total time difference 8 hrs 42 min
or 8.70 hrs

$$I_y = I_x \left(\frac{t_x}{t_y}\right)^{1.2}$$

$$= 53.5 \times \left(\frac{5.45}{7.57}\right)^{1.2} = 53.5 \times (0.720)^{1.2} = 53.5 \times 0.675$$

= 36.1 mr/hr (Intensity of aircraft at 1320 hrs due to normal decay without decontamination)

$$\frac{14.8 \text{ mr/hr}}{36.1 \text{ mr/hr}} \times 100 = 41.0\%$$

100.0% - 41.0% = 59.0% of contamination present at start of decontamination removed by 1st washing.

$$I_y = I_x \left(\frac{t_x}{t_y}\right)^{1.2}$$

$$= 53.5 \left(\frac{5.45}{8.70}\right)^{1.2} = 53.5 \times (0.626)^{1.2} = 53.5 \times 0.570$$

= 30.5 mr/hr (Intensity of aircraft at 1428 hrs due to normal decay without decontamination)

$$\frac{7.1 \text{ mr/hr}}{30.5 \text{ mr/hr}} \times 100 = 23.3\%$$

100.0% - 23.3% = 76.7% of contamination present at start of decontamination removed by 1st and 2nd washings.

[redacted]

[redacted]

CALCULATIONS (continued)

$$I_y = I_x \left(\frac{t_x}{t_y}\right)^{1.2}$$

$$= 14.8 \left(\frac{7.57}{8.70}\right)^{1.2} = 14.8 \times (0.870)^{1.2} = 14.8 \times 846$$

$$= 12.5 \text{ mr/hr}$$

$\frac{7.1 \text{ mr/hr}}{12.5 \text{ mr/hr}} \times 100 =$ 56.8% of contamination present during 2nd washing remaining after 2nd washing.

100.0% - 56.8% = 43.2% of contamination present during 2nd washing removed by 2nd washing.

$\frac{7.1 \text{ mr/hr}}{53.5 \text{ mr/hr}} \times 100 =$ 13.3% of original contamination remaining after decontamination complete.

100.0% - 13.3% = 86.7% of original contamination removed by decontamination and decay.

[redacted]

[redacted]

AREA CONTAMINATION

[redacted]

DETAIL AREA [redacted] SURVEY
AT
COMPLETION OF PROJECT RANGER

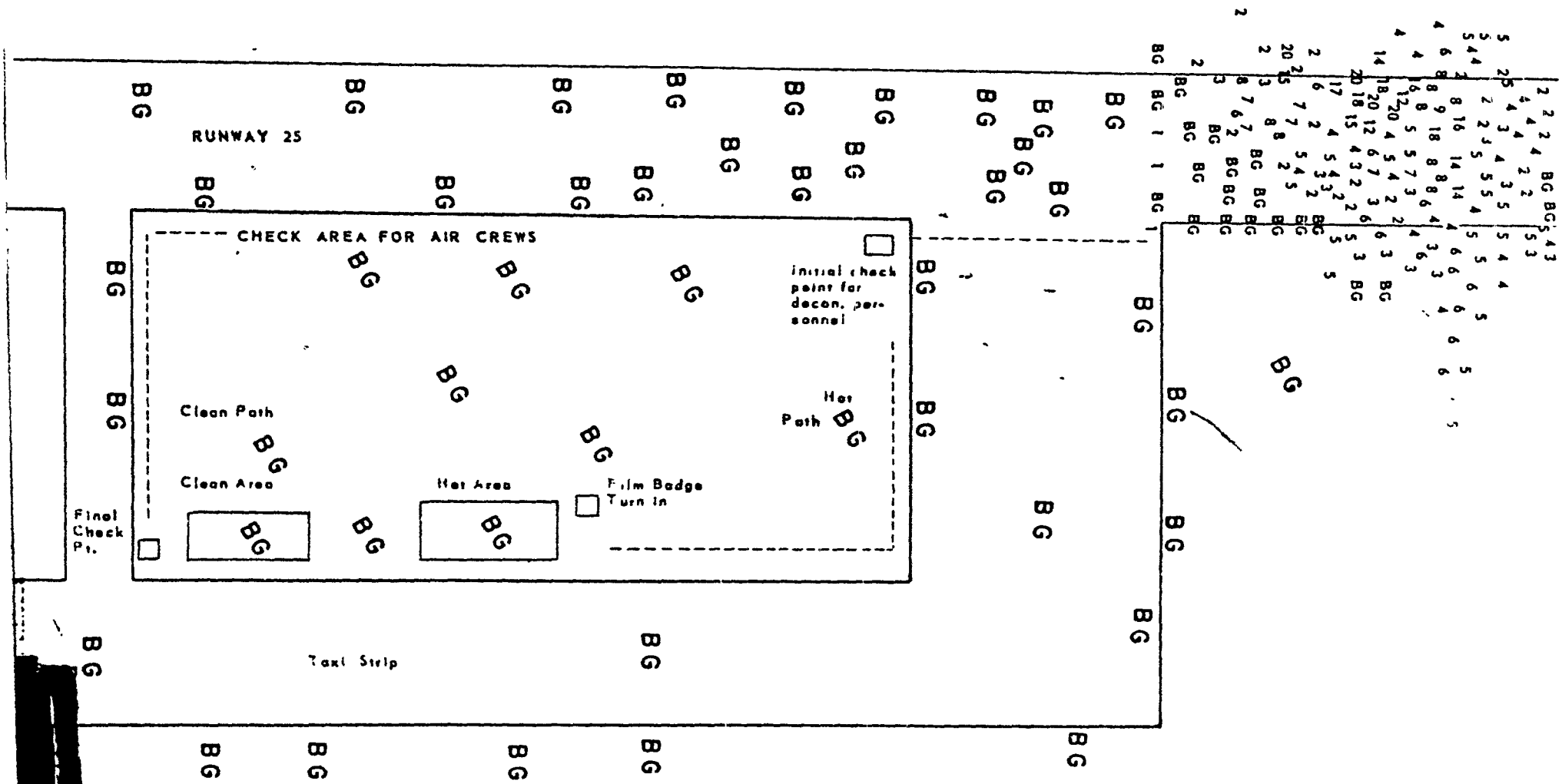

BACKGROUND ON 7 FEB 51

[redacted] readings are Beta plus Gamma in milliroentgens per hour taken approximately [redacted] (2½) feet above ground.

DETAILED SURVEY RESULTS

DECONTAMINATION DATA SHEET

(B-29 Aircraft)

Test #1 . Date 27 Jan 1951 - A/C No. 521-833 Monitor Trexler / Furgerson

Queball #1

TIME	Initial Survey	1st Wash Agent	Survey	2nd Wash Agent	Total
Begin	0950	1830	1930	2030	
Complete	1010	1925	1950	2135	
Elapsed	20	55	20	65	

Final survey completed at 2155

POSITION	Initial Survey R/hr	Survey R/hr	Final Survey R/hr	REMARKS
1. Wing tip	130	15	10	
2. Leading edge wing	275	35	19	
3. Turbo and exhaust	1100	120	30	
4. Prop tips	296	25	10	
5. Prop hubs	500	31	8	
6. Air intake	2300	13[illegible]	40	
7. Turbo and exhaust	1000	85	33	
8. Wheel well	600	80	20	
9. Prop tip	350	36	8	
10. Prop hub	600	30	6	
11. Air intake	2500	145	50	
12. Air duct	1900	100	25	
13. Pitot tube (2)	200	30	3	
14. Nose	375	25	5	
15. Nose wheel	200	37	7	
16. Pitot tube (1)	190	30	5	
17. Air duct	2150	95	34	
18. Air intake	2450	130	55	
19. Prop hub	400	28	7	
20. Prop tip	346	25	4	
21. Wheel wells	600	75	10	
22. Turbo and exhaust	1000	65	10	
23. Air intake	2100	115	45	
24. Prop hubs	440	30	6	
25. Prop tip	248	19	60	
26. Turbo and exhaust	1000	75	40	

[redacted]

[redacted]

27. Leading edge wing	360	27	12	
28. Aft tip	170	19	9	
29. Door (rear entrance)	340	20	15	
30. Tail skid	320	15	8	
31. Pilot seat	175	10	5	
32. Co-pilot seat	195	9	6	
33. Engineers seat	210	12	6	
34. Radar Obs	185	9	4	
35. Navigators	195	6	3	
36. Rt Scanner	240	5	3	
37. Lt Scanner	249	5	[illegible]	
38. Weather	210	11	3	
39. Radio Operator	200	10	5	
40. Lower Filter	1600	30	16	
Upper Filter	1900	60	27	

Remarks Contd

[redacted]

[redacted]

Test #1 Date 27 Jan 51 A/C No. 1831 Monitor Furgerson

Queball #2 [redacted]

TIME	Initial Survey	1st Wash Agent	Survey	2nd Wash Agent	Total Survey
Begin	0830	0945	1055	1205	1310
Complete	0845	1050	1115	1300	1330
Elapsed	15	65	20	55	20

Final Survey completed at 1330

POSITION	Initial Survey MR/hr	Survey MR/hr	Final Survey MR/hr	REMARKS
1. Wing tip	30	2	1.5	
2. Leading edge wing	40	2	1.5	
3. Turbo and exhaust	250	12	5	
4. Prop tips	80	7	2	
5. Prop hubs	70	10	2.5	
6. Air intake	420	23	8	
7. Turbo and exhaust	240	12	7	
8. Wheel well	140	6	5	
9. Prop tip	100	7	3	
10. Prop hub	170	10	5	
11. Air intake	495	28	10.5	
12. Air duct	200	9	5	
13. Pitot tube (2)	38	4	2	
14. Nose	39	2	BG*	
15. Nose wheel	28	BG*	BG*	
16. Pitot tube (1)	35	5	BG*	
17. Air duct	435	12	7	
18. Air intake	400	24	12	
19. Prop hub	90	8	2.5	
20. Prop tip	85	7	2.5	
21. Wheel wells	160	10	6	
22. Turbo and exhaust	240	14	7.5	
23. Air intake	490	36	15	
24. Prop hubs	160	12	2	
25. Prop tip	145	8	3	
26. Turbo and exhaust	240	14	7.5	

[redacted]

[redacted]

[redacted] COPY
from
THE NATIONAL ARCHIVES
Record Group No. .....

RG 334, Records of Interservice Agencies

400.112 Operation Ranger.
(Decontamination of Aircraft.)

[redacted]

[redacted]

FINAL SURVEY
OF
AIRCRAFT

[redacted]

[redacted]

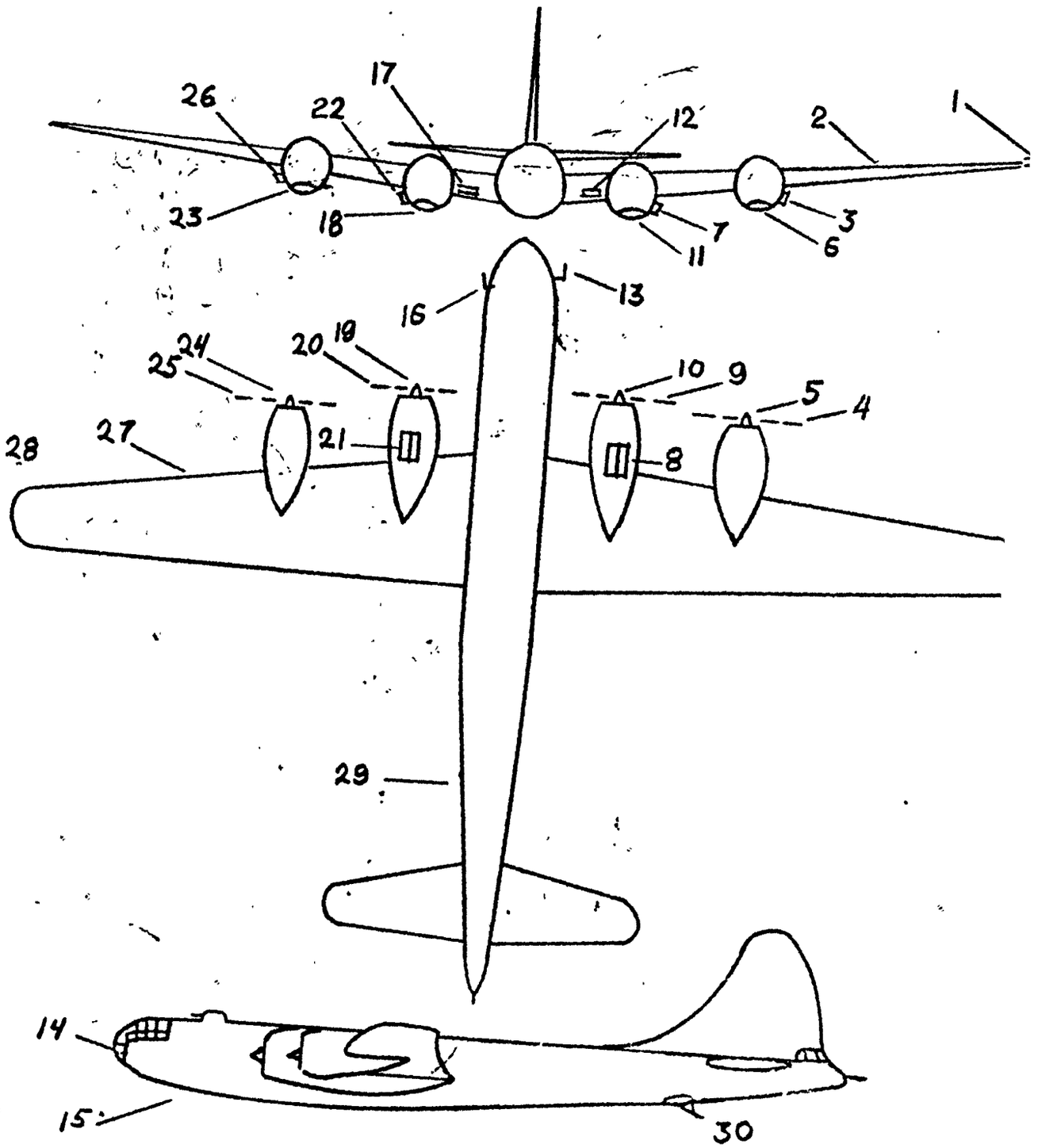
1
2
3
4
5
6
7
8
9
10
11
12
13
14
15
16
17
18
19
20
21
22
23
24
25
26
27
28
29
30

[redacted]

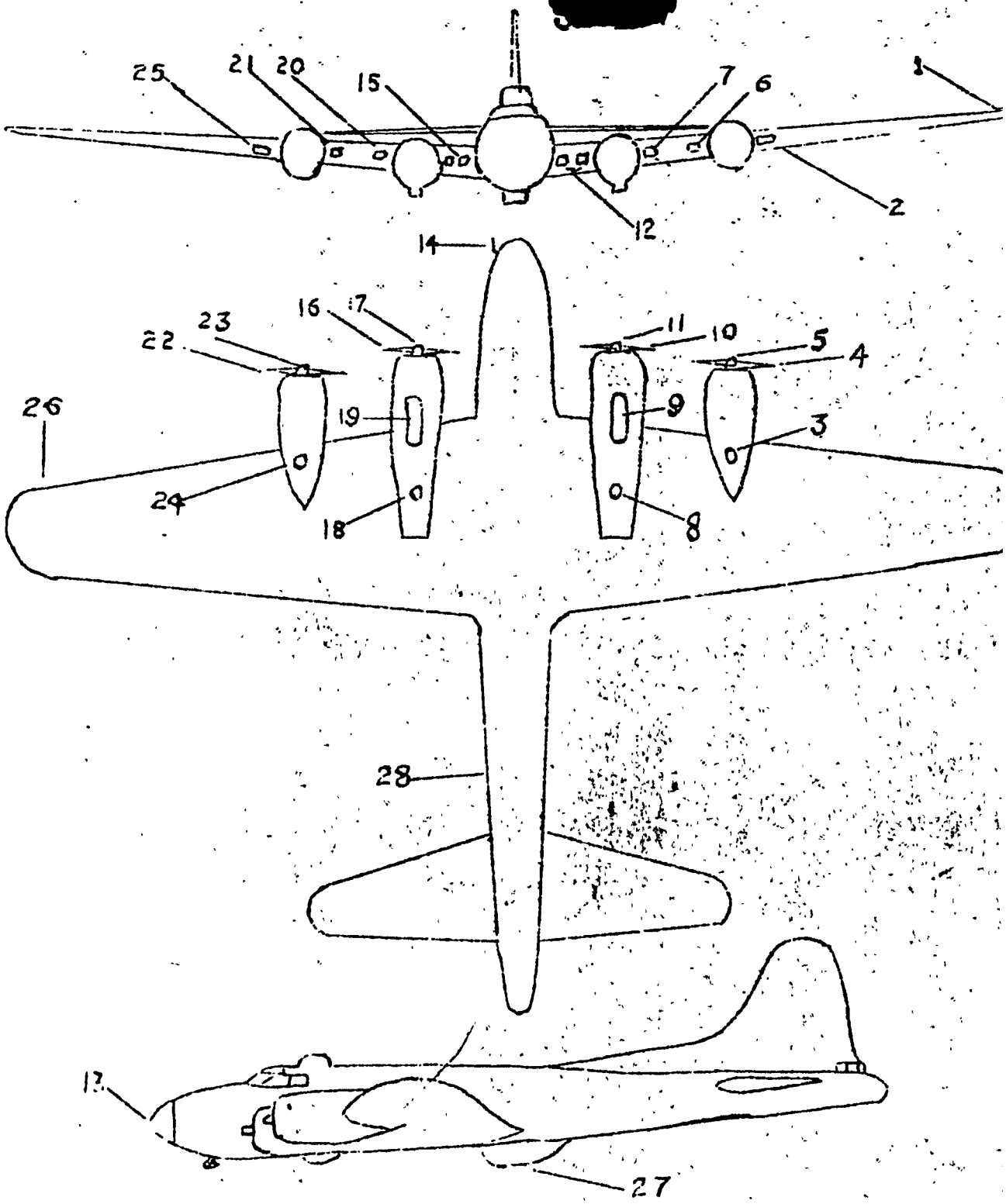

[redacted]

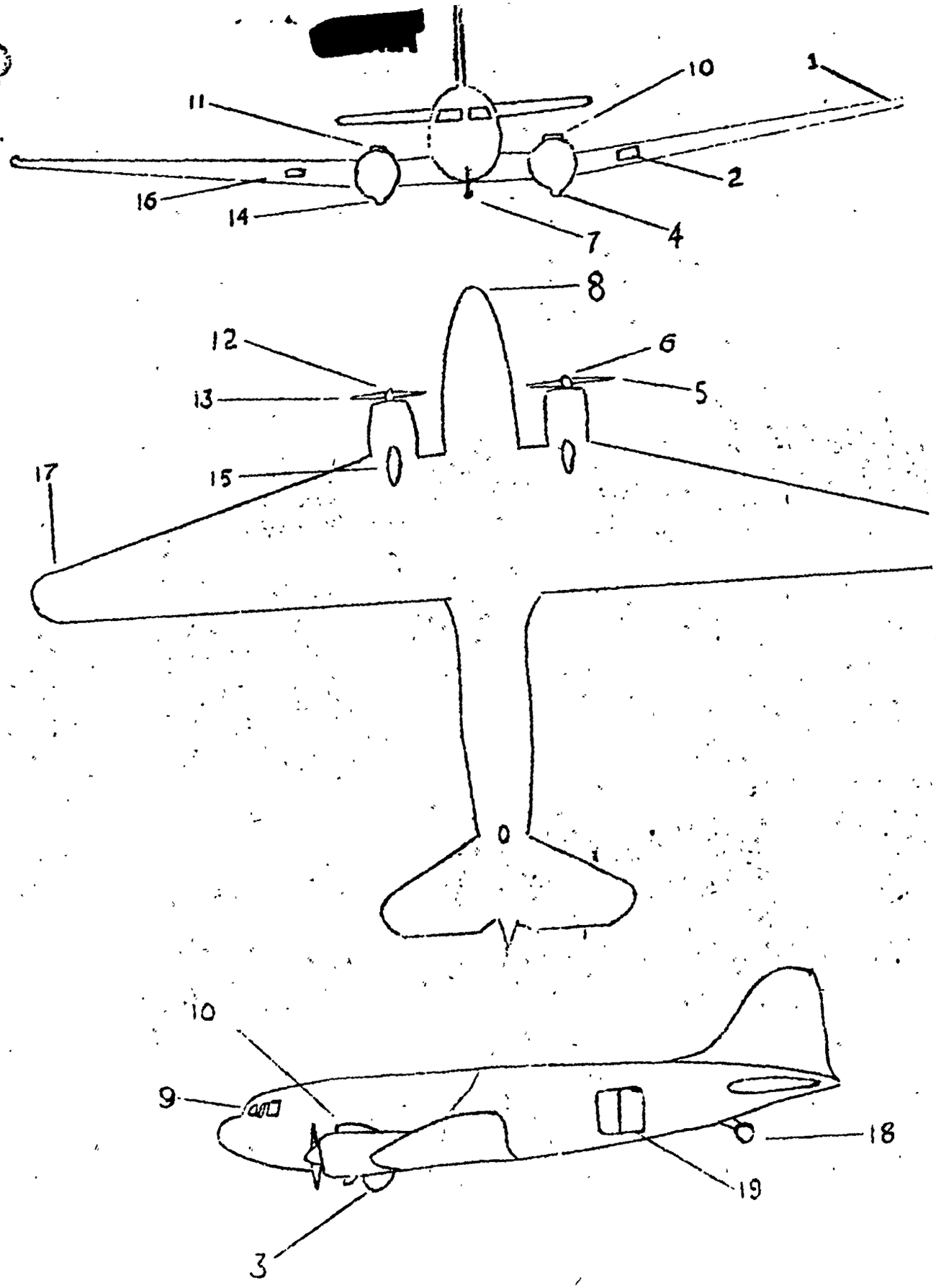

DECONTAMINATION DATA SHEET

(P-29 Aircraft)

Test [redacted] Date 28 Jan 51 A/C No. 52 1831 Monitor _____

Queball #1

[redacted]

TIME	Initial Survey	1st Wash Agent	Survey	2nd Wash Agent	3rd survey
Begin	0830	0900	1000	1020	1110
Complete	0850	0945	1015	1110	1130
Elapsed	20	45	15	50	20

Final survey completed at 1235 (see note)

POSITION	Initial Survey MR/hr	2nd Survey MR/hr	3rd Survey MR/hr	4th Survey MR/hr
1. Wing tip	80	20	14	12
2. Leading edge wing	80	35	14	12
3. Turbo and exhaust	220	100	50	12*
4. Prop tips	80	10	20	17
5. Prop hubs	70	50	20	17
6. Air intake	450	110	50	20*
7. Turbo and exhaust	220	110	20	17
8. Wheel well	150	50	20	17
9. Prop tip	80	50	15	13
10. Prop hub	100	20	20	17
11. Air intake	400	110	55	20*
12. Air duct	160	110	40	8*
13. Pitot tube (2)	60	15	10	8
14. Nose	30	10	10	8
15. Nose wheel	20	15	10	8
16. Pitot tube (1)	60	20	20	17
17. Air duct	175	90	40	6*
18. Air intake	400	100	45	24*
19. Prop hub	100	40	20	17
20. Prop tip	100	50	20	17
21. Wheel wells	175	50	20	17
22. Turbo and exhaust	205	105	45	4*
23. Air intake	450	100	40	12*
24. Prop hubs	150	40	18	15
25. Prop tip	105	40	20	17
26. Turbo and exhaust	220	60	40	33

[redacted]

27. Left [illegible] edge wing	75	26	14	12
[illegible]	50	16	10	8
29. Door (rear entrance)	80	35	18	15
[illegible]	60	30	30	25
31. Pilot seat	40	16	12	1*(2.0)
32. Co-pilot seat	38	13	10	1*
33. Engineers seat	48	18	11	1*
34. Navigator seat	50	13	12	1*
35. Radar Op.	58	18	12	1*
36. Rt Scanner	55	17	11	1*
37. Lt Scanner	58	16	9	1*
38. Weather	55	18	8	1*
39. Radio Operator	60	16	9	1*
40. Lower Pilar	700	20	10	8
41. Upper Pilar	850	35	20	17

Remarks Contd

NOTE:

Engines washed only with water plus detergent from 1155 to 1225. Between 600 - 700 gallons of water used. Two streams of H_2O & det @ approx 400 lbs. pressure were used simultaneously on each engine. Every effort was made to concentrate on the known hot spots to determine if increase in volume of water might be effective.

Readings marked * in 4th Survey Column indicate degree of effectiveness of decontamination where monitored. All other readings calculated using decay equation.

BACTERIAL AIRCRAFT DATA SHEET

(B-29 Aircraft)

Test #3 Detail #1 . Date 1 Feb [redacted] A/C No. 521831 NB-29 Monitor

TIME	Initial Survey	1st Wash Agent	Survey	2nd Wash Agent	Total
Begin	08:10	0845	0950	1020	
Complete	08:30	0950	1005	1130	
Elapsed	00:20	65	15	70	

Final survey completed @ 1200

POSITION	Initial Survey CP/hr	Survey CP/hr	Final Survey CP/hr	REMARKS
1. Wing tip	80	20	8	
2. Leading edge wing	80	25	8	
3. Turbo and exhaust	100	55	30	
4. Prop tips	60	38	20	
5. Prop hubs	80	30	14	
6. Air intake	400	85	30	See 20 NOTE
7. Turbo and exhaust	260	40	20	
8. Wheel well	100	40	20	
9. Prop tip	80	30	20	
10. Prop hub	90	35	14	
11. Air intake	400	100	30	20
12. Air duct	260	60	25	
13. Pitot tube (2)	70	10	5	
14. Nose	120	18	10	
15. Nose wheel	150	25	8	
16. Pitot tube (1)	70	10	4	
17. Air duct	270	40	25	
18. Air intake	430	110	30	20
19. Prop hub	110	38	15	
20. Prop tip	90	20	28	
21. Wheel wells	100	40	20	
22. Turbo and exhaust	190	40	26	
23. Air intake	440	100	25	15
24. Prop hubs	120	50	16	
25. Prop tip	90	25	20	
26. Turbo and exhaust	210	45	22	

[redacted]

[redacted]

27. Leading edge wing	80	25	8	
28. Wing tip	80	20	8	
29. Door (rear entrance)	50	10	5	
30. Tail skid	60	9	5	
31. Pilot seat	42	15	10	5
32. Co-pilot seat	36	12	8	5
33. Engineers seat	40	14	10	6
34. Weather	36	12	8	5
35. Nav.	40	12	9	4
36. Radar	40	12	9	4
37. R. Scanner	50	16	10	5
38. L. Scanner	50	16	12	5
39. Radio	50	12	12	4
40. Lower Filter Box	510	30	18	10
41. Upper Filter Box	680	45	25	19

Remarks Contd

NOTE reading in remarks column were taken after aircraft had been removed from decon. area. The above normal background in the decontamination area where the final survey was taken cuts down on the efficiency of the decontamination. Actually the final survey should be approximately/averaged 4 mr/hr less than that shown in final survey column.

(B-29 Aircraft)

Test #3 . Date 1 Feb 51 A/C No. 521833 Monitor

Queball #2 [redacted] WB-29

TIME	Initial Survey	1st Wash Agent	Survey	2nd Wash Agent	Total
Begin	09:40	11:00	12:40	13:30	
Complete	10:00	12:20	13:00	14:15	
Elapsed	:20	1:20	0:20	:45	

Final survey completed @ 14:35

POSITION	Initial Survey MR/hr	Survey MR/hr	Final Survey MR/hr	REMARKS
1. Wing tip	90	20	10	—
2. Leading edge wing	90	20	15	
3. Turbo and exhaust	190	40	30	
4. Prop tips	100	28	12	
5. Prop hubs	105	40	20	
6. Air intake	600	100	30	
7. Turbo and exhaust	200	60	30	
8. Wheel well	100	44	20	
9. Prop tip	100	42	10	
10. Prop hub	100	40	10	
11. Air intake	450	100	40	
12. Air duct	350	100	28	
13. Pitot tube (2)	100	40	20	
14. Nose	80	20	12	
15. Nose wheel	40	12	6	
16. Pitot tube (1)	109	35	18	
17. Air duct	200	50	35	
18. Air intake	500	100	40	
19. Prop hub	150	40	18	
20. Prop tip	110	40	20	
21. Wheel wells	100	40	20	
22. Turbo and exhaust	210	40	25	
23. Air intake	600	80	35	
24. Prop hubs	130	44	20	
25. Prop tip	100	30	17	
26. Turbo and exhaust	200	60	25	

[redacted]

27. Leading edge wing	90	20	10	
28. Wing tip	90	20	10	
29. Door (rear entrance)	110	32	4	
30. Tail skid	160	14	4	
31. Pilot seat	50	18	12	
32. Co-pilot seat	50	18	11	
33. Engineers seat	50	22	10	
34. Weather	40	15	10	
35. Navigator	50	22	10	
36. Radar	50	22	10	
37. Radio	70	20	12	
38. L. Scanner	70	20	10	
39. R. Scanner	70	25	13	
40. Lower Filter Box	560	40	16	
Upper Filter	600	45	20	

Remarks Contd

DECONTAMINATION DATA SHEET

(B-29 Aircraft)

Test #4 . Date 2 Feb 1951 A/C No. 44-27344A Monitor Johnson

Queball #1 [redacted]

TIME	Initial Survey	1st Wash Agent	Survey	2nd Wash Agent	Total
Begin	0845	1010	1040	1145	
Complete	0915	1035	1100	1330	
Elapsed	30	:25	:20	1.45	

Final survey @ 1400

POSITION	Initial Survey MR/hr	Survey MR/hr	Final Survey MR/hr	REMARKS
1. Wing tip	27	8	5	
2. Leading edge wing	43	10	5	
3. Turbo and exhaust	250	65	20	
4. Prop tips	110	20	8	
5. Prop hubs	95	12	4	
6. Air intake	360	100	20	
7. Turbo and exhaust	280	70	28	
8. Wheel well	110	50	11	
9. Prop tip	100	10	4	
10. Prop hub	100	18	7	
11. Air intake	400	90	22	
12. Air duct	200	40	16	
13. Pitot tube (2)	70	22	4	
14. Nose	22	9	2	
15. Nose wheel	24	10	3	
16. Pitot tube (1)	60	30	5	
17. Air duct	210	50	20	
18. Air intake	400	95	30	
19. Prop hub	100	20	8	
20. Prop tip	110	20	11	
21. Wheel wells	110	40	12	
22. Turbo and exhaust	300	100	28	
23. Air intake	400	100	25	
24. Prop hubs	105	14	6	
25. Prop tip	140	20	11	
26. Turbo and exhaust	300	40	19	

[redacted]

27.	Leading edge wing	60	8	4
28.	Wing tip	34	6	4
29.	Door (rear entrance)	90	26	10
30.	Tail skid	160	30	4
31.	Pilot seat	32	10	3
32.	Co-pilot seat	34	10	3
33.	Engineers seat	42	14	4
34.	Radio	50	12	4
35.	Scanner right	60	15	4
36.	Scanner left	50	12	4
37.	Weather	30	9	3
38.	Radar	42	9	3
39.	Navigator	50	14	4
40.	Filter box lower	420	40	12
	Filter box upper	460	60	18

Remarks Contd

*Note - Time lost filling and repair decontamination apparatus.

DECONTAMINATION DATA SHEET

(B-29 Aircraft)

Test #5 . Date 6 Feb 1951 A/C No. 263459 Monitor Johnson

Cueball #1 [redacted]

TIME	Initial Survey	1st Wash Agent	Survey	2nd Wash Agent	Total
Begin	0955	1015	1330	1550	
Complete	1010	1200	1350	1630	
Elapsed	0:15	1:45	:20	:40	

Final completed at 1650

POSITION	Initial Survey MR/hr	Survey MR/hr	Final Survey MR/hr	REMARKS
1. Wing tip	135	20	10	
2. Leading edge wing	135	35	14	
3. Turbo and exhaust	100	40	19	
4. Prop tips	180	7	6	
5. Prop hubs	110	15	11	
6. Air intake	400	110	38	
7. Turbo and exhaust	300	40	14	
8. Wheel well	100	11	8	
9. Prop tip	100	6	5	
10. Prop hub	110	14	7	
11. Air intake	400	44	16	
12. Air duct	300	15	10	
13. Pitot tube (2)	100	50	15	
14. Nose	140	22	8	
15. Nose wheel	160	20	7	
16. Pitot tube (1)	100	34	11	
17. Air duct	200	25	17	
18. Air intake	420	100	32	
19. Prop hub	150	15	11	
20. Prop tip	110	20	8	
21. Wheel wells	100	25	12	
22. Turbo and exhaust	300	85	29	
23. Air intake	320	110	37	
24. Prop hubs	150	15	8	
25. Prop tip	100	20	10	
26. Turbo and exhaust	250	80	16	

[redacted]

27. Leading edge wing	250	20	14	
28. Wing tip	300	17	13	
29. Door (rear entrance)	100	5	2	
30. Tail skid	150	27	14	
31. Pilot seat	40	Background*	Background*	
32. Co-pilot seat	40	2	Background	
33. Engineers seat	45	Background	Background	
34. Radar Obs.	45	Background	Background	
35. Navigator	45	Background	Background	
36. R. Scanner	60	4	Background	
37. L. Scanner	60	4	Background	
38. Weather	34	2	Background	
39. Radio Operator	50	4	Background	
40. Lower Filter	400	20	15	
Upper Filter	420	35	25	

Remarks Contd

*Note all Background reading considered to be 1 mr/hr but are not considered in the calculation of the average intensity of the aircraft.

[redacted]

(B-29 Aircraft)

Test 15 . Date 6 Feb 1951 A/C No. 521833 Monitor

Quebell #2 [redacted]

TIME	Initial Survey	1st Wash Agent	Survey	2nd Wash Agent	Total
Begin	1100	1230	1310	1330	
Complete	1125	1300	1330	1415	
Elapsed	25	30	20	45	

Final survey completed 1435

POSITION	Initial Survey MR/hr	Survey MR/hr	Final Survey MR/hr	REMARKS
1. Wing tip	18	12	6	
2. Leading edge wing	20	11	2	
3. Turbo and exhaust	70	20	16	
4. Prop tips	45	10	5	
5. Prop hubs	47	14	4	
6. Air intake	110	30	18	
7. Turbo and exhaust	70	18	10	
8. Wheel well	40	12	8	
9. Prop tip	45	10	6	
10. Prop hub	48	14	4	
11. Air intake	100	30	16	
12. Air duct	40	13	10	
13. Pitot tube (2)	29	10	4	
14. Nose	20	10	Background	
15. Nose wheel	20	10	3	
16. Pitot tube (1)	22	12	5	
17. Air duct	40	18	7	
18. Air intake	90	20	15	
19. Prop hub	48	11	2	
20. Prop tip	50	13	4	
21. Wheel wells	40	17	7	
22. Turbo and exhaust	60	22	10	
23. Air intake	95	25	14	
24. Prop hubs	50	12	4	
25. Prop tip	48	13	5	
26. Turbo and exhaust	50	20	16	

[redacted] [redacted]

[redacted]

27. Leading edge wing	22	11	2	
28. Wing tip	24	11	4	
29. Door (rear entrance)	15	15	6	
30. Tail skid	20	11	7	
31. Pilot seat	26	11	3	
32. Co-pilot seat	27	10	3	
33. Engineers seat	27	10	4	
34. Radar Obs.	28	10	4	
35. Nav.	28	10	4	
36. R. Scanner	28	11	4	
37. L. Scanner	28	11	4	
38. Weather	27	10	2	
39. Radio Operator	28	10	4	
40. Lower Filter	260	20	15	
Upper Filter	290	40	25	

Remarks Contd

[redacted]

DECONTAMINATION DATA SHEET

(C-47 Aircraft)

Test #5 & Final Date 6 Feb 5[redacted] A/C No. 477263 Monitor Doy

Queball #3

TIME	Initial Survey	1st Wash Agent	Survey	2nd Wash Agent	Total
Begin	1400	1430*			
Complete	1415	1500			
Elapsed	15	30			

POSITION	Initial Survey MR/hr	Survey MR/hr	Final Survey MR/hr	REMARKS
1. Wing tip	BG		BG	
2. Landing light	2xBG		BG	
3. Wheel well	BG		BG	
4. Oil cooler	30		1.5	
5. Prop tips	BG		BG	
6. Prop hub	3xBG		BG	
7. Pitot tube	BG		BG	
8. Nose	BG		BG	
9. Cabin front	BG		BG	
10. Air intake	BG		BG	
11. Air intake	BG		BG	
12. Prop hub	3xBG		BG	
13. Prop tip	BG		BG	
14. Oil cooler	30		1.5	
15. Wheel well	BG		BG	
16. Landing light	3xBG		BG	
17. Wing tip	BG		BG	
18. Tail wheel	1.5		1.5	
19. Entrance door	BG		BG	
20. Pilot seat	BG		BG	
21. Co-pilot	BG		BG	
22. Engineer	BG		BG	

(B-17 Aircraft)

Test #5 & Final Cuoball #4 Date 6 Feb 51 A/C No. 338635 Monitor Garvl

[redacted]

TIME	Initial Survey	1st Wash Agent	Survey	2nd Wash Agent	Total
Begin	1350	1415*	1435		
Complete	1410	1435	1445		
Elapsed					

POSITION	Initial Survey MR/hr	Survey MR/hr	Final Survey MR/hr	REMARKS
1. Wing tip L. edge	2		BG	
2. Ducts, Wing	3		BG	
3. Turbo	3		BG	
4. Prop tips	BG		BG	
5. Prop hub	BG		BG	
6. Oil cooler	BG		BG	
7. Oil cooler	BG		BG	
8. Turbo	BG		BG	
9. Wheel well	BG		BG	
10. Prop tips	BG		BG	
11. Prop hub	BG		BG	
12. Ducts, wing	BG		BG	
13. Nose	BG		BG	
14. Pitot tube	BG		BG	
15. Ducts, wing	BG		BG	
16. Prop tips	BG		BG	
17. Prop hub	BG		BG	
18. Turbo	BG		BG	
19. Wheel well	BG		BG	
20. Oil cooler	BG		BG	
21. Oil cooler	BG		BG	
22. Prop tips	BG		BG	

[redacted]

27. Leading edge wind	BG	BG	BG	
28. Wing tip	"	"	"	
29. Door (rear entrance)	"	"	"	
30. Tail skid	"	"	"	
31. Pilot seat	"	"	"	
32. Co-pilot seat	"	"	"	
33. Engineers seat	"	"	"	
34. R. Scanner	"	"	"	
35. L. Scanner	"	"	"	
36. Radio Operator	"	"	"	
37. Weather	"	"	"	
38.				
39.				
40.				

Remarks Contd

DECONTAMINATION DATA SHEET
(B-29 Aircraft)

Test 5th & Final Shortimer Able Date 6 Feb 51 A/C No. 521872 Monitor Fox & Ferguson

TIME	Initial Survey	1st Wash Agent	Survey	Final Survey 7 Feb 51	Total
Begin	1500	1530	1600	0930	
Complete	1515	1600	1615	0950	
Elapsed	15				

POSITION	Initial Survey MR/hr	Survey MR/hr	Final Survey MR/hr	REMARKS
1. Wing tip	BG	BG	BG	
2. Leading edge wing	"	"	"	
3. Turbo and exhaust	"	"	"	
4. Prop tips	"	"	"	
5. Prop hubs	"	"	"	
6. Air intake	"	"	"	
7. Turbo and exhaust	"	"	"	
8. Wheel well	"	"	"	
9. Prop tip	"	"	"	
10. Prop hub	"	"	"	
11. Air intake	"	"	"	
12. Air duct	"	"	"	
13. Pitot tube (2)	"	"	"	
14. Nose	"	"	"	
15. Nose wheel	"	"	"	
16. Pitot tube (1)	"	"	"	
17. Air duct	"	"	"	
18. Air intake	"	"	"	
19. Prop hub	"	"	"	
20. Prop tip	"	"	"	
21. Wheel wells	"	"	"	

[redacted]

27. Radar dome			BO	
28. Entrance door			BO	
29. Pilot seat			BO	
30. Co-pilot			BO	
31. Engineer			BO	
32.			BO	
33.			BO	
33.			BO	
34.			BO	
35.				
36.				
37.				
38.				
39.				
40.				

Remarks Contd.

(B-29 Aircraft)

Test FINAL Date 7 Feb 1951 A/C No. 521833 Monitor

TIME	Initial Survey	1stWash Agent	Survey	2nd Wash Agent	Total
Begin					
Complete					
Elapsed					

POSITION	Initial Survey MR/hr	Survey MR/hr	Final Survey MR/hr	REMARKS
1. Wing Tip			1	
2. Leading edge wing			BG	
3. Turbo and exhaust			5	
4. Prop tips			2	
5. Prop hubs			1	
6. Air intake			1	
7. Turbo and exhaust			4	
8. Wheel well			2	
9. Prop tip			2	
10. Prop hub			1	
11. Air intake			BG	
12. Air duct			1	
13. Pitot tube (2)			BG	
14. Nose			BG	
15. Nose wheel			1	
16. Pitot tube (1)			1	
17. Air duct			2	
18. Air intake			4	
19. Prop hub			2	
20. Prop tip			1	
21. Wheel wells			2	
22. Turbo and exhaust			5	
23. Air intake			4	
24. Prop hubs			2	
25. Prop tip			1	
26. Turbo and exhaust			6	

[redacted]

[redacted]

27. Leading edge wing			1	
28. Wing tip			1	
29. Door (rear entrance)			BG	
30. Tail skid			2	
31. Pilot seat			BG	
32. Co-pilot seat			BG	
33. Engineers seat			1	
34. Radar Obs.			1	
35. Navigator			1	
36. R. Scanner			BG	
37. L. Scanner			BG	
38. Weather			BG	
39. Radio Opr.			1	
40. Lower Filter			6	
Upper Filter			6	

Remarks Contd

 [redacted]

[redacted]

[redacted]

DECONTAMINATION DATA SHEET
(B-29 Aircraft)

Test FINAL Date 7 Feb 1951 A/C No. 263459 Monitor Johnson

TIME	Initial Survey	1st Wash Agent	Survey	2nd Wash Agent	Total
Begin					
Complete					
Elapsed					

POSITION	Initial Survey MR/hr	Survey MR/hr	Final Survey MR/hr	REMARKS
1. Wing tip			5	
2. Leading edge wing			2	
3. Turbo and exhaust			12	
4. Prop tips			3	
5. Prop hubs			6	
6. Air intake			20	
7. Turbo and exhaust			15	
8. Wheel well			6	
9. Prop tip			4	
10. Prop hub			4	
11. Air intake			15	
12. Air duct			8	
13. Pitot tube (2)			5	
14. Nose			2	
15. Nose wheel			BG	
16. Pitot tube (1)			6	
17. Air duct			8	
18. Air intake			20	
19. Prop hub			8	
20. Prop tip			4	
21. Wheel wells			8	
22. Turbo and exhaust			12	
23. Air intake			20	
24. Prop hubs			4	
25. Prop tip			4	
26. Turbo and exhaust			14	

[redacted]

27. Leading edge wing			4	
28. Wing tip			4	
29. Door (rear entrance)			4	
30. Tail skid			6	
31. Pilot seat			BG	
32. Co-pilot seat			BG	
33. Engineers seat			BG	
34. Radar Obs.			BG	
35. Navigator			BG	
36. R. Scanner			BG	
37. L. Scanner			BG	
38. Weather			BG	
39. Radio Opr.			BG	
40. Lower filter			10	
Upper filter			11	

Remarks Contd

DECONTAMINATION DATA SHEET
(B-29 Aircraft)

Test FINAL Date 7 Feb 51 A/C No. 521831 Monitor Furguson

TIME	Initial Survey	1st Wash Agent	Survey	2nd Wash Agent	Total
Begin	1030				
Complete	1040				
Elapsed	10				

POSITION	Initial Survey MR/hr	Survey MR/hr	Final Survey MR/hr	REMARKS
1. Wing tip			BG	
2. Leading edge wing			BG	
3. Turbo and exhaust			1	
4. Prop tips			BG	
5. Prop hubs			BG	
6. Air intake			1	
7. Turbo and exhaust			1	
8. Wheel well			BG	
9. Prop tip			BG	
10. Prop hub			BG	
11. Air intake			1.5	
12. Air duct			BG	
13. Pitot tube (2)			BG	
14. Nose			BG	
15. Nose wheel			BG	
16. Pitot tube (1)			BG	
17. Air duct			0.5	
18. Air intake			1.5	
19. Prop hub			BG	
20. Prop tip			BG	
21. Wheel wells			0.5	
22. Turbo and exhaust			1.0	
23. Air intake			1.5	
24. Prop hubs			BG	
25. Prop tip			BG	
26. Turbo and exhaust			1.0	

[redacted]

[redacted]

27. Leading edge wing			BG	
28. Wing tip			BG	
29. Door (rear entrance)			BG	
30. Tail skid			BG	
31. Pilot seat			BG	
32. Co-pilot seat			BG	
33. Engineers seat			BG	
34. Lower Filter			1.0	
35. L. Scanner			BG	
36. R. Scanner			BG	
37. Radio			BG	
38.				
39.				
40.				

Remarks Contd

[redacted]

DECONTAMINATION DATA SHEET
(B-29 Aircraft)

Test FINAL Date 7 Feb 51 A/C No. 44-86399 Monitor Furguson

TIME	Initial Survey	1st Wash Agent	Survey	2nd Wash Agent	Total
Begin	1045				
Complete	1055				
Elapsed	10				

POSITION	Initial Survey MR/hr	Survey MR/hr	Final Survey MR/hr	REMARKS
1. Wing tip			BG	
2. Leading edge wing			BG	
3. Turbo and exhaust			BG	
4. Prop tips			BG	
5. Prop hubs			BG	
6. Air intake			BG	
7. Turbo and exhaust			BG	
8. Wheel well			BG	
9. Prop tip			BG	
10. Prop nub			BG	
11. Air intake			BG	
12. Air duct			BG	
13. Pitot tube (2)			BG	
14. Nose			BG	
15. Nose wheel			BG	
16. Pitot tube (1)			BG	
17. Air duct			BG	
18. Air intake			BG	
19. Prop hub			BG	
20. Prop tip			BG	
21. Wheel wells			BG	
22. Turbo and exhaust			BG	
23. Air intake			BG	
24. Prop hubs			BG	
25. Prop tip			BG	
26. Turbo and exhaust			BG	

[redacted]

[redacted]

27. Leading edge wing				
28. Wing tip			BG	
29. Door (rear entrance)			BG	
30. Tail skid			BG	
31. Pilot seat			BG	
32. Co-pilot seat			BG	
33. Engineers seat			BG	
34. Lower Filter			BG	
35. L. Scanner			BG	
36. R. Scanner			BG	
37. Radio			BG	
38.				
39.				
40.				

Remarks Contd

[redacted]

[redacted]

[redacted]

UNCLASSIFIED

DISTRIBUTION STATEMENT A
Approved for public release
Distribution Unlimited

DETAILED CONCLUSIONS AND RECOMMENDATIONS

UNCLASSIFIED

[redacted]

DISTRIBUTION STATEMENT A
Approved for public release
Distribution Unlimited

[redacted]

From the results obtained, it is obvious that decontamination is well worthwhile if a contaminated aircraft interferes with the successful completion of a mission or operation. Decontamination will also lessen to a large degree the amount of exposure to maintenance personnel as well as having a good psychological effect on all personnel connected with the aircraft.

The results clearly indicate that the process employed in decontamination is definitely a major step in the right direction for ultimate success. It is believed that the basic process has been established and that improvement will result from changes in technique.

The present process requires no scrubbing or scraping devices for removal of the contamination and does not require physical contact with the aircraft by decontamination personnel, thus decreasing the radiation hazard to them. It allows decontamination to be accomplished under field conditions without any specialized equipment, only using that equipment and supplies normally on hand; therefore, no additional logistic problem is presented.

A permanent decontamination station could easily be designed and constructed which would decrease the over-all time involved in decontamination and in all probability increase the effectiveness of decontamination.

It is definitely known that the over-all time spent on decontamination could be reduced, even under field conditions, if a more suitable decontamination apparatus was developed. The presently used apparatus is somewhat a "Rube Goldberg" piece or equipment, being fragile and temperamental. The present apparatus has many faults such as:

1. Volume of tank too small. Should be at least 1000 gallons.

2. Slow filling when necessary to fill by utilizing the suction created by the pump in connection with a venture. The action should be direct and the tank filled directly from the discharge side of the pump.

3. The pump is driven through a clutch which has a tendency to slip when under load. The pump should be a direct drive.

4. Valves hard to operate and handles very easily broken.

5. Piping arrangement too complicated for simple operation.

[redacted]

6. Improvement in the nozzles on the discharge end of the base.

7. Very difficult to drain in case of cold weather to prevent freezing.

8. Difficult to perform maintenance on the pump due to its inaccessibility.

The results show that the largest amount of contamination is removed by the first washing and that an average of approximately 20% less was removed by the second washing. This reduction in efficiency is to be expected and establishes the conclusion that additional washing would eventually be useless.

In view of the results obtained and a study of the conclusions, the following recommendations are made:

1. It is recommended that the procedure used for decontamination during Operation RANGER be established as Standard Operating Procedure for the Air Force until additional competency is established.

2. That development work be started on a decontamination apparatus that will meet all requirements established by qualified personnel.

[redacted]

[redacted]

SUBJECT NAME	Sensor SUSPENSE DATE	Cat 3 NUMBER
FROM	DATE	TYPE
	FILE DESIGNATION	
SUMMARY	1 cy # 11B	

TO	TO	TO	TO	TO
DATE 12/1/83	DATE 12/13/83	DATE	DATE	DATE
REPLIED OR INDORSED TO	FILED (Place)	OTHER ACTION Retain		

[redacted]