(2)

POR-2013(EX)
(WT-2013)(EX)
EXTRACTED VERSION

OPERATION DOMINIC, FISH BOWL SERIES

Project Officers Report—Project 2.2

Gamma Radiation Measurements

J. W. Kinch, Project Officer
R. W. Jenkins
U. S. Army Nuclear Defense Laboratory
Edgewood Arsenal, MD

AD-A995 395

No Date Available

NOTICE:

This is an extract of POR-2013 (WT-2013), Operation DOMINIC, Fish Bowl Series, Project Officers Report, Project 2.2.

Approved for public release;
distribution is unlimited.

DTIC FILE COPY

Extracted version prepared for
Director
DEFENSE NUCLEAR AGENCY
Washington, DC 20305-1000

DTIC
ELECTE
MAR 1 1986
E

1 September 1985

86 3 1 032

Destroy this report when it is no longer needed. Do not return to sender.

PLEASE NOTIFY THE DEFENSE NUCLEAR AGENCY, ATTN: STTI, WASHINGTON, DC 20305-1000, IF YOUR ADDRESS IS INCORRECT, IF YOU WISH IT DELETED FROM THE DISTRIBUTION LIST, OR IF THE ADDRESSEE IS NO LONGER EMPLOYED BY YOUR ORGANIZATION.

DNA PRINTING PLANT

DISCLAIMER NOTICE

THIS DOCUMENT IS BEST QUALITY PRACTICABLE. THE COPY FURNISHED TO DTIC CONTAINED A SIGNIFICANT NUMBER OF PAGES WHICH DO NOT REPRODUCE LEGIBLY.

UNCLASSIFIED
SECURITY CLASSIFICATION OF THIS PAGE

AD-A185 375

REPORT DOCUMENTATION PAGE

1a REPORT SECURITY CLASSIFICATION UNCLASSIFIED	1b RESTRICTIVE MARKINGS
2a SECURITY CLASSIFICATION AUTHORITY N/A since Unclassified	3 DISTRIBUTION/AVAILABILITY OF REPORT Approved for public release; distribution is unlimited.
2b DECLASSIFICATION/DOWNGRADING SCHEDULE N/A since Unclassified	
4 PERFORMING ORGANIZATION REPORT NUMBER(S)	5 MONITORING ORGANIZATION REPORT NUMBER(S) POR-2013 (EX) (WT-2013) (EX)
6a NAME OF PERFORMING ORGANIZATION U.S. Army Nuclear Defense Lab. — 6b OFFICE SYMBOL (If applicable)	7a NAME OF MONITORING ORGANIZATION Defense Atomic Support Agency
6c. ADDRESS (City, State, and ZIP Code) Edgewood Arsenal, MD	7b ADDRESS (City, State, and ZIP Code) Washington, DC
8a NAME OF FUNDING/SPONSORING ORGANIZATION — 8b OFFICE SYMBOL (If applicable)	9 PROCUREMENT INSTRUMENT IDENTIFICATION NUMBER
8c. ADDRESS (City, State, and ZIP Code)	10 SOURCE OF FUNDING NUMBERS PROGRAM ELEMENT NO / PROJECT NO / TASK NO / WORK UNIT ACCESSION NO

11 TITLE (Include Security Classification)
OPERATION DOMINIC, FISH BOWL SERIES
Project Officers Report—Project 2.2; Gamma Radiation Measurements, Extracted Version

12 PERSONAL AUTHOR(S)
Kinch, J.W., Project Officer and Jenkins, R.W.

13a TYPE OF REPORT	13b TIME COVERED FROM ____ TO ____	14 DATE OF REPORT (Year, Month, Day)	15 PAGE COUNT
		No Date Available	49

16 SUPPLEMENTARY NOTATION This report has had sensitive military information removed in order to provide an unclassified version for unlimited distribution. The work was performed by the Defense Nuclear Agency in support of the DoD Nuclear Test Personnel Review Program.

17 COSATI CODES			18 SUBJECT TERMS (Continue on reverse if necessary and identify by block number)	
FIELD	GROUP	SUB-GROUP	DOMINIC, Project 2.2	Blue Gill Triple Prime
18	3		Fishbowl	King Fish
6	18		Star Fish Prime	Gamma Radiation Dosimeters

19 ABSTRACT (Continue on reverse if necessary and identify by block number)

This project was conducted to measure the initial gamma dose as a function of distance for Shots Star Fish Prime, Blue Gill Triple Prime and King Fish. To accomplish these objectives, the gamma dose was measured by film badges, glass microdosimeters, cobalt-activated borosilicate glass, calcium fluoride thermoluminescent dosimeters, and formic acid chemical dosimeters. The gamma dose versus distance was successfully measured from all three shots; and the gamma doses from all events were within designed experimental error and precision. By the use of cobalt-activated borosilicate glass plates at two different locations in the instrument pods, Project 2.2 was able to measure the differential thermal neutron flux created by the thermalization of fast neutrons by the pod mass. The formic acid chemical dosimeter failed to provide reliable gamma doses due to its high dose-rate dependence. The CaF_2 thermoluminescent dosimeter provided readings that were considerably higher than those measured by the other detectors. Further rate dependence studies are necessary to explain this discrepancy.

20 DISTRIBUTION/AVAILABILITY OF ABSTRACT ☒ UNCLASSIFIED/UNLIMITED ☐ SAME AS RPT ☐ DTIC USERS	21 ABSTRACT SECURITY CLASSIFICATION UNCLASSIFIED
22a NAME OF RESPONSIBLE INDIVIDUAL Mark D. Flohr	22b TELEPHONE (Include Area Code) (202) 325-7559 — 22c OFFICE SYMBOL DNA/ISCM

DD FORM 1473, 84 MAR — 83 APR edition may be used until exhausted. All other editions are obsolete.

SECURITY CLASSIFICATION OF THIS PAGE
UNCLASSIFIED

FOREWORD

Classified material has been removed in order to make the information available on an unclassified, open publication basis, to any interested parties. The effort to declassify this report has been accomplished specifically to support the Department of Defense Nuclear Test Personnel Review (NTPR) Program. The objective is to facilitate studies of the low levels of radiation received by some individuals during the atmospheric nuclear test program by making as much information as possible available to all interested parties.

The material which has been deleted is either currently classified as Restricted Data or Formerly Restricted Data under the provisions of the Atomic Energy Act of 1954 (as amended), or is National Security Information, or has been determined to be critical military information which could reveal system or equipment vulnerabilities and is, therefore, not appropriate for open publication.

The Defense Nuclear Agency (DNA) believes that though all classified material has been deleted, the report accurately portrays the contents of the original. DNA also believes that the deleted material is of little or no significance to studies into the amounts, or types, of radiation received by any individuals during the atmospheric nuclear test program.

Accession For
NTIS GRA&I X
DTIC TAB
Unannounced
Justification
Distribution/
Availability Codes
Avail and/or
Dist Special
A-1

DNA [illegible]

ABSTRACT

This project was conducted to measure the initial gamma dose as a function of distance for Shots Star Fish Prime, Blue Gill Triple Prime, and King Fish.

To accomplish these objectives, the gamma dose was measured by film badges, glass microdosimeters, cobalt-activated borosilicate glass, calcium fluoride thermoluminescent dosimeters, and formic acid chemical dosimeters.

Project 2.2 successfully measured the gamma dose versus distance from Shots Star Fish Prime, Blue Gill Triple Prime, and King Fish.

The gamma doses from all events were within designed experimental error and precision.

The measured gamma doses from the three events scaled well as dose per kiloton versus distance. The theoretically predicted doses were [illegible] than the measured doses.

The incident thermal neutron flux on the pod backplate for Shot Blue Gill Triple Prime as estimated by this project agreed in order of magnitude with that reported by Project 2.1.

By the use of cobalt-activated borosilicate glass plates at two different locations in the instrument pods, Project 2.2 was able to measure the differential thermal neutron flux created by the thermalization of fast neutrons by the pod mass.

The formic acid chemical dosimeter failed to provide reliable gamma doses due to its high dose-rate dependence.

The CaF_2 thermoluminescent dosimeter provided readings

that were considerably higher than those measured by the other detectors. Further rate dependence studies are necessary to explain this discrepancy.

CONTENTS

ABSTRACT ---------- 5

CHAPTER 1 INTRODUCTION ---------- 9

1.1 Objective ---------- 9
1.2 Background ---------- 9
1.3 Theory ---------- 11

CHAPTER 2 PROCEDURE ---------- 13

2.1 Operations ---------- 13
2.2 Instrumentation ---------- 15
2.2.1 Film Dosimetry ---------- 16
2.2.2 Glass Microdosimeters ---------- 17
2.2.3 Formic Acid Dosimeter ---------- 18
2.2.4 Cobalt-Activated Borosilicate Dosimeter ---------- 20
2.2.5 Manganese-Activated Calcium Fluoride Thermoluminescent Dosimeter ---------- 21

CHAPTER 3 RESULTS ---------- 29

3.1 Gamma Doses for Shot Star Fish Prime ---------- 29
3.2 Gamma Doses for Shot Blue Gill Triple Prime ---------- 30
3.3 Gamma Doses for Shot King Fish ---------- 31
3.4 Estimated Differential Thermal Neutron Flux ---------- 31

CHAPTER 4 DISCUSSION ---------- 46

4.1 Gamma Dose as a Function of Distance ---------- 46
4.2 Correlation with Previous Test Data ---------- 47
4.3 Estimated Differential Thermal Neutron Flux ---------- 48
4.4 Gamma Dose per Kiloton versus Distance ---------- 50
4.5 Effect of Pod Mass on Shielding of the Gamma Dose ---------- 50
4.6 Data Reliability ---------- 51
4.7 Individual Gamma Detector Performance ---------- 51

CHAPTER 5 CONCLUSIONS AND RECOMMENDATIONS ---------- 58

5.1 Conclusions ---------- 58
5.2 Recommendations ---------- 59

REFERENCES ---------- 60

TABLES

2.1 Pertinent Parameters for Shots Star Fish Prime, Blue Gill Triple Prime, and King Fish ---------- 22
2.2 Pod Information for Shots Star Fish Prime, Blue Gill Triple Prime, and King Fish ---------- 23
2.3 Pod Orientation Angles ---------- 24
2.4 Sensitivity Ranges of Dosimetry Film ---------- 24
3.1 Uncorrected Gamma Dose Results, Shot Star Fish Prime ---------- 32
3.2 Corrected Gamma Dose Results, Shot Star Fish Prime ---------- 33
3.3 Uncorrected Gamma Dose Results, Shot Blue Gill Triple Prime ---------- 34
3.4 Corrected Gamma Dose Results, Shot Blue Gill Triple Prime ---------- 35
3.5 Uncorrected Gamma Dose Results, Shot King Fish ---------- 36
3.6 Corrected Gamma Dose Results, Shot King Fish ---------- 37
3.7 Estimated Differential Thermal Neutron Flux ---------- 38
4.1 Predicted and Measured Gamma Doses for Shots Star Fish Prime, Blue Gill Triple Prime, and King Fish ---------- 54

FIGURES

2.1 Disposition of gamma containers in instrument pods ---------- 25
2.2 Pod orientation angles ---------- 26
2.3 Gamma dosimeter container ---------- 27
2.4 Dosimeters used to measure gamma dose ---------- 28
3.1 Gamma dose versus distance for Shot Star Fish Prime (test conditions) ---------- 39
3.2 Gamma dose times distance squared versus distance for Shot Star Fish Prime (test conditions) ---------- 40
3.3 Gamma dose versus distance for Shot Blue Gill Triple Prime (test conditions) ---------- 41
3.4 Gamma dose times distance squared versus distance for Shot Blue Gill Triple Prime (test conditions) ---------- 42
3.5 Location of gamma dosimeters in Project 2.1 neutron detector containers ---------- 43
3.6 Gamma doses versus distance for Shot King Fish (test conditions) ---------- 44
3.7 Gamma dose times distance squared versus distance for Shot King Fish (test condition) ---------- 45
4.1 Gamma dose per kiloton of yield versus distance for Shots Star Fish Prime, Blue Gill Triple Prime, and King Fish (test conditions) ---------- 55
4.2 Gamma dose per kiloton of yield times distance squared versus distance for Shots Star Fish Prime, Blue Gill Triple Prime, and King Fish (test conditions) ---------- 56
4.3 Photographic dosimetry film from Shots Blue Gill Triple Prime and King Fish ---------- 57

CHAPTER 1

INTRODUCTION

1.1 OBJECTIVE

The objective of this project was to [illegible] gamma radiation dose as a function of distance from high-altitude nuclear detonations.

1.2 BACKGROUND

Detailed discussions have been presented (References 1 through 4) describing gamma-dose measurements that have been conducted since Operation Sandstone. Early predictions of the effects of nuclear weapons detonated at high altitudes (Reference 5) lead to the participation of projects measuring the gamma dose during Shot HA of Operation Teapot, and also in Shots Yucca, Teak, and Orange, of Operation Hardtack (References 1 through 6). The high-altitude shots, Yucca, Orange, and Teak, were conducted to study the military effectiveness of nuclear detonations in the altitude region of high-performance aircraft and missiles. Since that time, considerable interest has been generated concerning the effects of nuclear radiation upon the guidance systems and nuclear components of missile weapons systems. The primary considerations have been in the area of kill mechanisms and in the study of the electromagnetic pulse.

Although many techniques have been used to measure gamma radiation, the film badge has been used at every event where gamma measurements were conducted. In conjunction with film badge measurements, a number of different film holders have been used to provide energy independence and electronic equilibrium. The more common National Bureau of Standards (NBS), the Los Alamos aluminum-wood, and the Edgerton, Germeshausen, and Grier (EG&G) holders have all been used with varying degrees of success. In the past, information as to the film's neutron sensitivity has been lacking. The Nuclear Defense Laboratory (NDL) has recently obtained and reported the direct neutron interaction correction factors for most dosimeter films (Reference 7).

Various glass dosimeter systems have also been employed to measure gamma radiation. The DT-60/PD (Personnel Dosimeter) was used at various times until Operation Plumbbob (References 8 through 10); the silver phosphate glass microdosimeters have been used with moderate success at Operation Plumbbob and Hardtack (References 11 through 13). The results obtained with these various detector systems were questioned because of the lack of information regarding their neutron response. Recently, the neutron interaction correction factors for silver phosphate glass microdosimeters have been evaluated and reported (References 14 and 15). Additionally, a number of chemical dosimeters, including chloroform (References 9, and 16 through 18), tetrachloroethylene, single and double phase, (References 9, 11, 12, 16, 17, and 19), and trichloroethylene (Reference 19), have been used with varying degrees of success.

[illegible] THERE

Although only a small part of the energy of a megaton-range [illegible] appears as gamma radiation, the fact that the device [illegible] in a near vacuum at high altitude permits the gamma radiation to penetrate to a considerably greater distance [illegible] burst than from a corresponding detonation at a lower [illegible]. The calculations and predictions of the effects of [illegible] at high altitude (References 1, [illegible], and 6) have [illegible] that the effective range of gamma radiation considerably [illegible] that for blast damage.

The gamma dose at various distances depends on the relative magnitude of contributions from several processes. The major contributors to the initial dose are generally:

1. The prompt radiation accompanying the fission process. This prompt radiation appears to be heavily absorbed in the weapon components, and due to this absorption, it has been estimated (Reference 20) that only a small percentage of the total dose at distances of a few thousand yards is contributed by prompt radiation. Although this observation was made at a low altitude where there is considerable attenuation of the gamma radiation by the air, it is felt that at high altitudes, this contribution would still be in the order of only a few percent.

2. The gamma radiation produced by the (n, γ) reaction between the thermal and fast neutrons with the N^{14} in the atmosphere. At high altitudes, the reduced air density eliminates, as a significant contributor, gamma production from the atmospheric N^{14}.

3. The gamma production from neutron interactions with the high-explosive components is a definite contributor to the initial dose. The gamma rays are produced within a few nanoseconds to about 0.25 second after detonation and have an average energy

range from 4.5 to 10.8 Mev. The fast-neutron interaction is of particular importance in the case of boosted devices.

4. The fission-product gamma rays. These are a major contributor to the initial dose from about 0.25 second until 10.0 seconds (References 20 and 21) and have an average energy of about 1 Mev.

5. The gamma dose arising from neutron interactions with the environment of the dosimeter package. At high altitudes, instrument packages are placed in appropriate space vehicles. The neutron interactions, (n,γ), with the vehicle structural materials and other instrumentation present contribute an unknown, but small, magnitude to the total gamma dose.

CHAPTER 2

PROCEDURE

2.1 OPERATIONS

During Operation Fish Bowl, Project 2.2 participated in all events for which the Thor was used as a launch vehicle. The events designated as Tiger Fish, Blue Gill, Blue Gill Prime, Star Fish, and Blue Gill Double Prime produced no nuclear environment. However, in most instances, project instrumentation was recovered and reused. The events Blue Gill Triple Prime, King Fish, and Star Fish Prime were detonated as expected, and the results of measurements made during these events are described in this report. Table 2.1 lists parameters pertinent to these nuclear events.

All project instrumentation was contained in three recoverable scientific instrument pods. These pods were attached to the launch vehicle and released at the proper time during the early part of the trajectory to place them at various distances from the point of detonation. A complete description of the pods can be found in Reference 22. Figure 2.1 shows the location and orientation of the Project 2.2 instrumentation in the pods. Table 2.2 lists information pertinent to the pods for the three nuclear events.

All pods from Shot Star Fish Prime were recovered and returned to Johnston Island between H+8 and H+10 hours. All gamma dosimeters were removed on D+1 and returned to NDL on D+4 for analysis.

All pods from Blue Gill Triple Prime were recovered and

returned to Johnston Island by H+8 hours. All gamma dosimeters were removed on D+1 and were returned to NDL for analysis on the D+4 flyaway.

Pods 1 and 2 from Shot King Fish were returned to Johnston Island at approximately H+6 hours. The gamma instrumentation was removed from Pod 2 immediately, as the rear bulkhead was missing from this pod. The instrumentation from Pod 1 was removed on D+1. All dosimeters were returned to NDL for analysis. Only the nose of Pod 3 from this event was found.

Complete gamma detection packages were fabricated for placement into the instrument pods. Three packages (per pod) were located on a support plate 19 inches from the rear bulkhead and were at equidistant intervals around the pod. Package placement and orientation were originally designed to minimize attenuation of the gamma rays when the pods were positioned with the predetermined attitude from the source (±7-1/2 degrees from vertical).

The gamma dosimeters were so positioned that at the presumed attitude of the pod they would look at the burst through only the back-plate and protective coatings (3/16-inch refrasil for Shots Blue Gill Triple Prime and King Fish, and 3/16-inch carbon for Star Fish Prime). Because of last-minute modifications of other pod instrumentation, this unobstructed view of the source by the dosimeters could not be maintained.

The orientation of the pods during Shots Blue Gill Triple Prime and King Fish were apparently as planned. During Shot Star Fish Prime, pod orientation was estimated by Project 8B (Reference 23) by the measurement of the X-ray shadows cast by various pod fittings. Two angles were determined to give

pod orientation. The first, θ, was the angle between the longitudinal axis of the pod and the burst in the plane formed by this line and point. The second angle, φ, measured the roll attitude as the angle between the burst point and the YY-axis of the pod in the plane of the rear bulkhead. Figure 2.2 is a diagrammatic representation of these angles. The angles θ and φ for Star Fish Prime are listed in Table 2.3.

2.2 INSTRUMENTATION

Gamma dose measurements were conducted using the following dosimetric techniques: (1) the darkening of photographic film, (2) the photoluminescence phenomenon of silver phosphate glass, (3) the production of hydrogen and carbon dioxide in oxygen-saturated aqueous formic acid solutions, (4) the radiation-induced optical density change in cobalt-activated borosilicate glass, and (5) the manganese-activated calcium fluoride thermoluminescent dosimeters.

Each dosimeter package was comprised of dosimeter films in NBS film packs; several glass microdosimeter rods in their appropriate shields, several cobalt glass plates, two quartz ampules containing formic acid solution, and several thermoluminescent dosimeters (Figures 2.3 and 2.4). The film was maintained at a temperature of 40° to 55°F prior to being placed in the pods. After mating to the Thor, this temperature range could not be maintained, but no sensitivity was believed lost as the film was not exposed to prolonged or excessive heat during the preshot time.

Many events did not produce a nuclear environment. However, it was not considered feasible to reuse the CaF_2 thermoluminescent dosimeters that had been flown on these events, because their condition could not be deter-

mined in the field. As a result, there were only enough CaF_2 dosimeters available to instrument Shot Star Fish Prime. None were used for Shots Blue Gill Triple Prime and King Fish.

2.2.1 Film Dosimetry. The gamma film dosimeters employed were similar to those used at past weapon tests (References 24 and 25). These dosimeters were composed of NBS film holders loaded with two dental-size dosimeter film packets that were sealed in polyethylene bags to prevent damage from moisture. The NBS film holder (Reference 25) consisted of bakelite-tin-and-lead shields. The bakelite shield, 8.25 mm thick was covered with 0.3 mm of lead. A lead strip of 1-mm thickness covered the seam. The low-energy radiation was more strongly suppressed by the lead shield than the high-energy radiation, and this kept the response linear above 115 kev. Below 115 kev, the gamma radiation was seriously attenuated. The bakelite was used as a media which produced electronic equilibrium at the surface of the film. The employment of the NBS holders essentially eliminated energy dependence from the measurements. In order to cover the region of interest, DuPont film packets SX231, containing emulsions 508, 510, and 1290, and Eastman Kodak packet 649-0, covering the general range from 0.1 rad to approximately 7×10^4 rads, were used. Table 2.4 gives the sensitivity ranges of the various dosimeter films exposed.

Since film sensitivity is affected by environment and manufacture, each batch was calibrated at the same time that the experimental gamma exposures were made. This was accomplished by calibration of the film at the Nevada Test Site just prior to shot time at Johnston Island. The control, calibration, and experimental films were developed at the same time and

their densities measured. The films were processed for 5 minutes at 20.80 ±0.20°C with Kodak liquid X-ray developer. The density of the experimental film was then converted to dose by comparing it with the film that had been exposed to calibrated amounts of Co^{60} gamma radiation.

Neutrons will directly interact with the film, and thus yield readings that are higher than the true gamma response. Correction factors for the effect of neutrons were determined (Reference 7) and were applied to the film data utilizing the neutron spectrum and integrated flux measured by Project 2.1.

2.2.2 Glass Microdosimeters. The glass microdosimeters used were precision cylinders of silver metaphosphate glass, 1 by 6 mm, manufactured by the Bausch and Lomb Company. The composition of the base material was carefully controlled in production to the following weight percent: $Al(PO_3)_3$, 50 percent; $Ba(PO_3)_2$, 25 percent; KPO_3, 25 percent. To this base was added an additional 8 percent, by weight, of $Ag\ PO_3$. Gamma radiation formed stable luminescence centers in this glass which, when excited by ultra-violet radiation, emitted photons with a wavelength of approximately 6400 Å. The intensity of this luminescence which was measured in a fluorometer, was directly proportional to the gamma dose. It has been reported, (Reference 26) that the range of the microdosimeter is from 1×10^1 to 1×10^4 rads, but by use of the appropriate heating and readout techniques (Reference 27), the upper range was extended to approximately 1×10^5 rads.

Two readout instruments were used: the Turner Model 110 Flurometer and the Bausch and Lomb Microdosimeter Reader, which was modified by personnel at NDL in accordance with

specifications determined by Oak Ridge National Laboratory (ORNL). Although the response of the glass rods was energy-dependent for energies below 100 kev, energy independence above 100 kev was obtained by the use of lead shields with the electron equilibrium established by a Teflon insert. The shields were composed of a tight-fitting 2-mm-thick Teflon tube into which two glass rods were inserted end to end; a 0.75-mm lead strip was then wrapped once around the Teflon, and the edges of the lead were crimped shut. The lead suppresses the lower energy radiation sufficiently to keep the response linear above 115 kev. Below 115 kev the gamma radiation is severely attenuated. The glass rods were calibrated at NDL by exposing them to known doses of Co^{60}. A calibration curve was constructed, plotting the difference in observed luminescence from exposed and nonexposed rods versus dose. Dose during calibration was measured with standard Victoreen ion chambers that had been cross-checked with dosimeters calibrated at NBS.

Corrections for fast and thermal neutron interactions with the glass rods were made utilizing information in References 14 and 15.

2.2.3 Formic Acid Dosimeter. The dosimeter was composed of an oxygen-saturated solution of 0.01 M formic acid and 0.001N sulfuric acid. The radiolysis products have been accounted for the following mechanism (Reference 28):

$$H_2O \rightarrow H + OH \qquad (2.1)$$

$$H_2O \rightarrow 1/2\ H_2 + 1/2\ H_2O_2 \qquad (2.2)$$

$$OH + HCOOH \rightarrow H_2O + HCOO \qquad (2.3)$$

$$H + HCOOH \rightarrow H_2 + HCOO \qquad (2.4)$$

$$HCOO + O_2 \rightarrow CO_2 + HO_2 \qquad (2.5)$$

$$H + O_2 \rightarrow HO_2 \qquad (2.6)$$

$$HO_2 + HO_2 \rightarrow H_2O_2 + O_2 \qquad (2.7)$$

As seen from the equations, hydrogen, carbon dioxide, and hydrogen peroxide were produced. For interpretation of the dosimeter, the molecular products were determined. Hydrogen was separated by the use of a Van Slyke gas extraction apparatus, and after separation, the hydrogen was quantitatively determined by standard gas chromatographic techniques using a molecular sieve column employing air as the carrier gas. Hydrogen peroxide was determined by measuring the triodide-ion by a spectrophotometric method (Reference 29). A Perkin-Elmer 4000 Å Spectrophotometer was used to measure the optical density at 350mμ. The formic acid solution was exposed in transparent quartz ampules that were sealed via a vacuum O-ring standard taper joint. The rates of production of the products formed for gamma and neutron radiations were known (References 28, 30, 31, 32), and these were combined with the molecular yields to write simultaneous equations. As an illustration, assume that A and B are the two products measured, then

$$A_T = \gamma A_\gamma + nA_n \qquad (2.8)$$

$$B_T = \gamma B_\gamma + nB_n \qquad (2.9)$$

where

A_T = quantity of A observed in moles/liter

B_T = quantity of B observed in moles/liter

γ = total integrated gamma dose in rads

A_γ = gamma yield of A in moles liter^{-1} rad^{-1}

n = total neutron dose in rads

A_n = neutron yield of A in moles liter^{-1} rad^{-1}

B_γ = gamma yield of B in moles liter^{-1} rad^{-1}

B_n = neutron yield of B in moles liter^{-1} rad^{-1}

Since A_T, B_T, A_γ, B_γ, A_n, and B_n, were known, solution of equations resulted in a value for γ.

Dose was also calculated by substituting the neutron dose (n), supplied by Project 2.1 to solve either of the equations. The yields of hydrogen gas and hydrogen peroxide in the formic acid dosimeter were well established for both total gamma and neutron radiation (References 29 through 32). Since the interpretation of the gamma dose has been shown to be based upon these yields of hydrogen and hydrogen peroxide (Equations 2.8 and 2.9), the dosimeters were interpreted directly without the need for calibration. The formic acid analyses were conducted at NDL.

2.2.4 Cobalt-Activated Borosilicate Dosimeter. The cobalt-activated borosilicate glass dosimeter utilized the fact that, upon exposure to ionizing radiation, a pronounced darkening effect occurred (Reference 26). The measurement of this change in absorption at 390mμ gave direct readings when compared to plates previously calibrated with a Co^{60} source. The composition of these plates in mole percent was: SiO_2, 62.5 percent; Na_2O, 10.6 percent; B_2O_3, 20.8 percent; Al_2O_3, 6.0 percent; and Co_3O_4, 0.1 percent; these plates had an effective range of 10^4 to 10^8 rads (Reference 26), and dimensions of 15 by 6 by 2 mm.

Calibration of the glass plates with a 10-curie Co^{60} source was done on the day of the shot to eliminate corrections for fading. A Perkin-Elmer Spectracord Model 4000Å was used to measure the optical density of the exposed plates.

The neutron sensitivity of these dosimeter plates is not fully known at the present time. Preliminary work at the

Sandia Pulse Reactor Facility (SPRF) has been done on the fast-neutron response (Reference 33), but more experimentation must be accomplished to obtain the neutron sensitivity corrections over a wide spectrum of energies.

2.2.5 Manganese-Activated Calcium Fluoride Thermoluminescent Dosimeter. Upon exposure of the manganese-activated calcium fluoride thermoluminescent dosimeter to radiation, the electrons released in the ionization process were trapped at lattice imperfections throughout the crystalline solid. When the dosimeter was heated, the electrons were released and recombined with the opposite charges; light was emitted in the process. This light was measured by the employment of a photo-multiplier tube. By plotting the luminescence of the exposed phosphors versus temperature at a constant heating rate, and then by comparing the area under the curve to that of similar plots of calibrated dosimeters, dose was determined. The rate dependence has been determined only to 7×10^3 rads/min (Reference 34), but work is currently being done at EG&G to determine their rate dependence at higher fluxes. The dosimeters are energy dependent, but appropriate shields make them independent in the range of 40 kev to 1.2 Mev. Work is presently being conducted at EG&G on the energy dependence for energies greater than 1.2 Mev. The neutron response has been investigated by NDL at SPRF, and the data is reported in Reference 33. Additional experimentation must be conducted to determine the neutron sensitivity over a wide spectrum of energies. Earlier dosimeters were approximately the size of a pocket watch; the present dosimeter is a hollow cylinder 1 mm in diameter and 12 mm long filled with active phosphor. The cylinder is flame sealed under an inert

atmosphere. These dosimeters were exposed in groups of five; the groups were incased in an aluminum container, and the container was wrapped with tinfoil to achieve energy independence. The entire package was covered with black electrical tape for strength and moisture-proofing.

Since there is some fading of these dosimeters with time, they were flown from Johnston Island to the Naval Research Laboratory (NRL) as soon as possible after detonation. The dosimeters were prepared, calibrated, and read at NRL.

TABLE 2.1 PERTINENT PARAMETERS FOR SHOTS STAR FISH PRIME, BLUE GILL TRIPLE PRIME, AND KING FISH

TABLE 2.2 POD INFORMATION FOR SHOTS STAR FISH PRIME, BLUE GILL TRIPLE PRIME, AND KING FISH

[illegible]	Pod	Distance From Point Detonation	
		Planned	Actual
		km	km
[illegible] Fish	S-1	7.5	8.7
	S-2	10.0	12.3
	S-3	14.0	23.4
		ft	
Blue Gill Triple Prime	B-1	2,500	1.0
	B-2	4,000	1.4
	B-3	6,000	2.1
		km	
King Fish	K-1	1.9	2.5
	K-2	2.4	3.8
	K-3	3.3	2.9

TABLE 2.3 POD ORIENTATION ANGLES

Pod Number	θ	ϕ
S-1	> 135°	61°
S-2	43°	0°
S-3	41°	35°

TABLE 2.4 SENSITIVITY RANGES OF DOSIMETRY FILM

Packet Type	Emulsion Number	Recommended Range
		r
Dupont SX-231	508	0.1 to 10
Dupont SX-231	510	10 to 35
Dupont SX-231	1290	35 to 2,500
Eastman Kodak	649-0	2,500 to 70,000

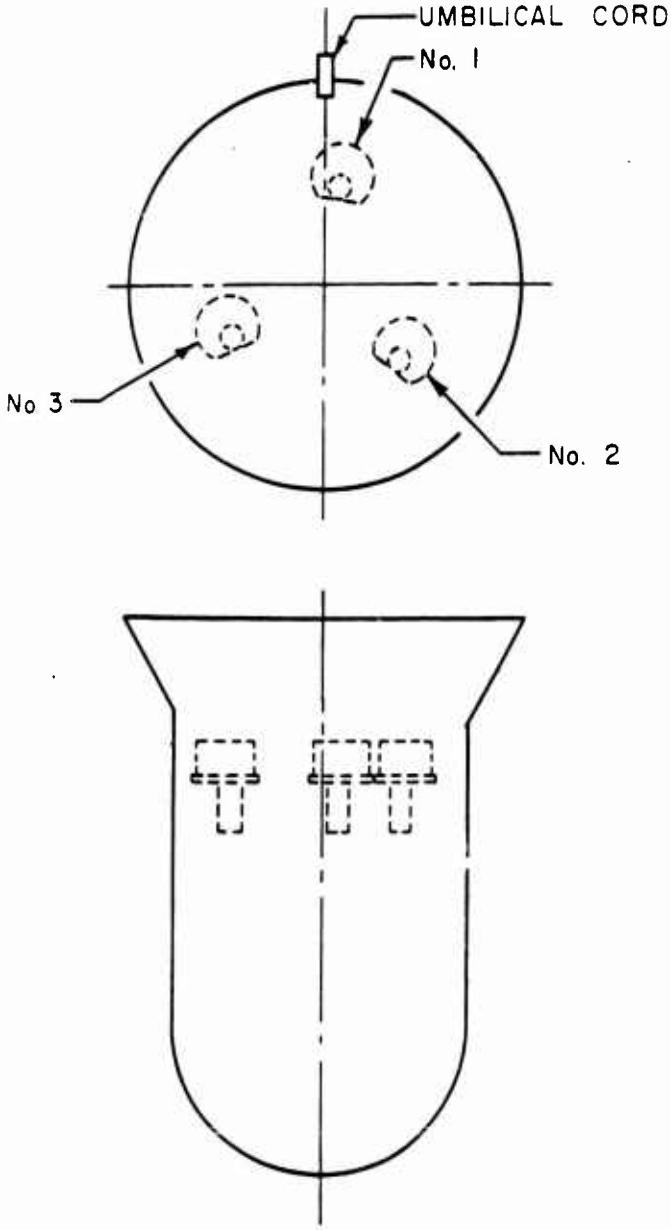

Figure 2.1 Disposition of gamma containers in instrument pods. (Not drawn to scale.)

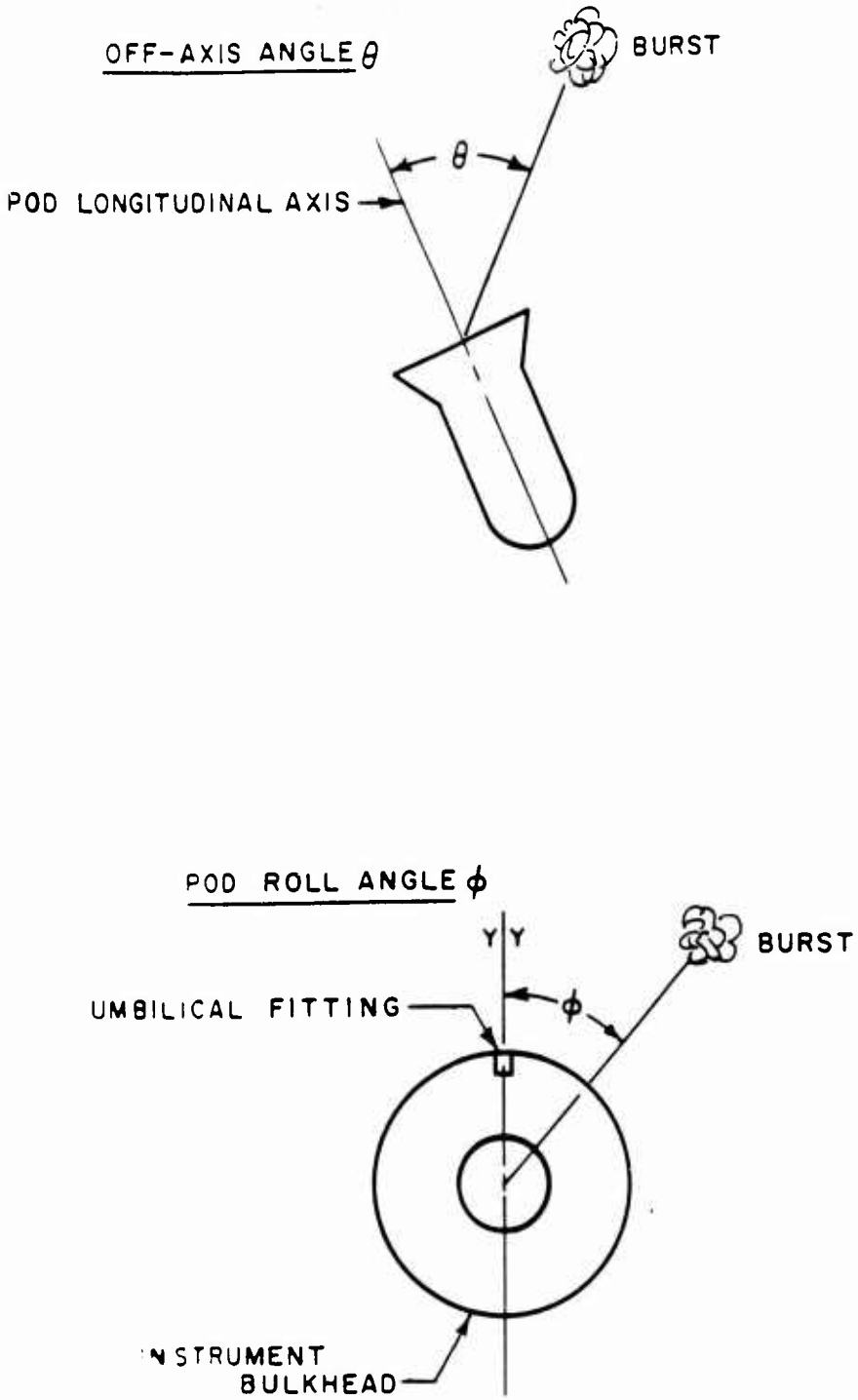

Figure 2.2 Pod orientation angles.

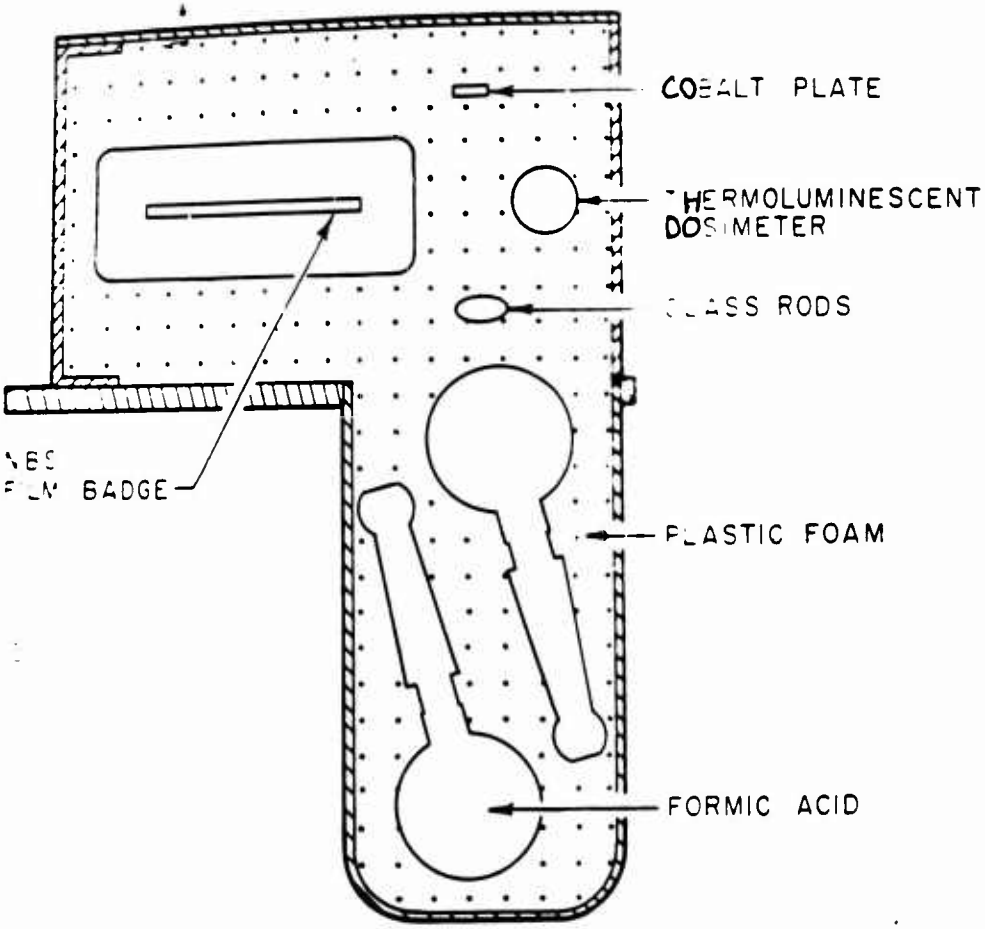

Figure 2.3 Gamma dosimeter container.

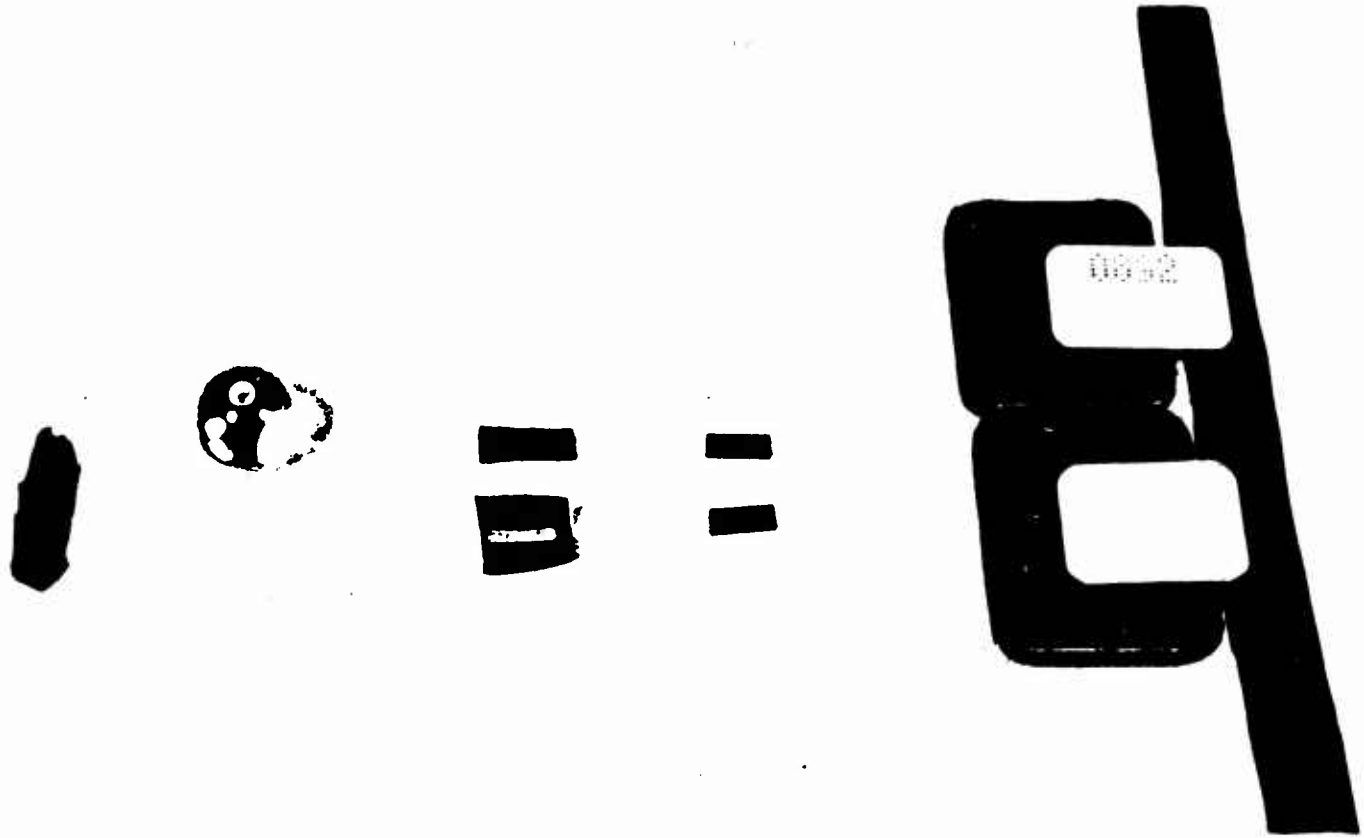

Figure 2.4 Dosimeters used to measure gamma dose. From left to right, thermoluminescent dosimeter, formic acid in quartz ampule, $AgPO_3$ glass rods in lead and Teflon-shield, cobalt glass plates, and film in NBS holder. (NDL photo 23-458-5/A1-62)

CHAPTER 3

RESULTS

3.1 GAMMA DOSES FOR SHOT STAR FISH PRIME

The gamma doses for Shot Star Fish Prime are presented in Tables 3.1 and 3.2. The uncorrected gamma dose results are listed in Table 3.1. All values in Table 3.2 have been corrected for neutron interactions with the dosimeters and all data in both tables are reported in rads.

All gamma detectors were recovered, but no useable data were obtained from the cobalt glass plates, because of their under-exposure, or from formic acid, because of its rate dependence (Reference 35). The thermoluminescent dosimeters read high, and this difference can not be fully explained at present.

Gamma dose versus distance and gamma dose times distance squared versus distance are plotted in Figures 3.1 and 3.2, respectively. The doses for these figures are the corrected averages of film and $AgPO_3$ glass rods. Although data were obtained from the dosimeters in all three Pod S-1 containers, only data obtained from the container 1 dosimeters were used in construction of these curves. This is based on the fact that the data obtained from the detectors in containers 2 and 3 appear quite low when compared to that obtained from container 1 and apparently do not fit the curve defined by the data from Pods S-2 and S-3. This discrepancy can be explained by the misorientation of Pod S-1 and the variation in shielding and thermalization of neutrons that would occur for containers 2 and 3. The

relationship of each gamma container to the pods' umbilical connection is shown in Figure 2.1. This relationship of container number to the umbilical connection holds for all the pods on all the Fish Bowl Series.

3.2 GAMMA DOSES FOR SHOT BLUE GILL TRIPLE PRIME

Table 3.3 lists the uncorrected gamma data, and Table 3.4 lists the neutron corrected data for Shot Blue Gill Triple Prime.

All gamma detectors were recovered and processed. No useable data were obtained from the formic acid dosimeters, and the film readings for Pod B-1 were all above the effective dose range. In Pods B-2 and B-3, only the 649-0 film was within range. The fast neutron correction factor for the 649-0 film (Reference 33) is based on the fission-neutron spectrum of a pulsed reactor and may not be directly applicable to weapon-test data. Therefore, until further work is performed, the 649-0 film data will not be corrected for fast-neutron effects. The 649-0 film data is not included on the dose versus distance plot (Figure 3.3) or the dose times distance squared versus distance plot shown in Figure 3.4. These plots were constructed by using the corrected data for $AgPO_3$ glass rods and two types of cobalt plates; cobalt plates that were in the neutron containers of Project 2.1 (Figure 3.5) (Reference 36) and plates that were located in the gamma containers. Because the thermal neutron response of the cobalt plates was very large, and the fact that those located in the neutron containers were exposed to a very low thermal neutron flux, the data thus obtained are considered more valid.

3.3 GAMMA DOSES FOR SHOT KING FISH

The uncorrected and corrected gamma doses are reported in Table 3.5 and 3.6, respectively. All dosimeters in Pod K-1 were recovered. Only the film packet was recovered from container 3 in Pod K-2. All other dosimeters in Packages 1 and 2 of Pod K-2 were recovered. Since the rear backplate of K-2 was missing, no neutron detector containers were obtained, and therefore, the film data from this pod could not be corrected. Pod K-3 was not recovered.

Figure 3.6 shows the data from Shot King Fish plotted as gamma dose versus distance, and Figure 3.7 gives dose times distance squared versus distance.

3.4 ESTIMATED DIFFERENTIAL THERMAL NEUTRON FLUX

The difference in the thermal neutron flux between the pod backplate and the central support plate is estimated for Shots Blue Gill Triple Prime and King Fish in Table 3.7. These flux values were derived from the difference in apparent gamma readings between the cobalt plates located in the neutron containers and those in the gamma containers, and the knowledge of the thermal neutron response of the cobalt plates. This procedure is described in more detail in Section 4.3.

Apparent thermal neutron flux in n/cm^2

= (back plate dose-central support plate dose) $\times 1.37 \times 10^8$ $n/cm^2/rad$ (Reference 37).

No thermal neutron flux could be estimated for Shot Star Fish Prime, as the doses were all below the range of the cobalt glass plates.

pages 32-42 deleted

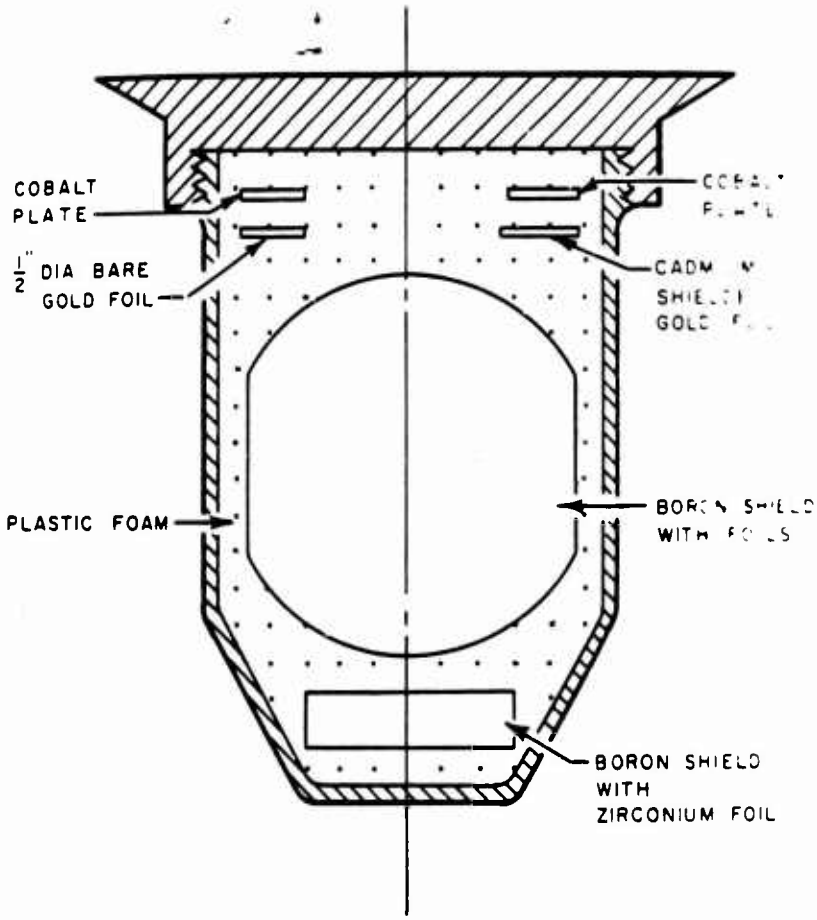

Figure 3.5 Location of gamma dosimeters in Project 2.1 neutron detector containers.

Pages 44-45 deleted.

CHAPTER 4

DISCUSSION

4.1 GAMMA DOSE AS A FUNCTION OF DISTANCE

Analysis of the data shows that generally good agreement was obtained for gamma dose versus distance for all the shots in which this project participated.

For the three shots, the individual dose times distance squared versus distance plots yielded essentially straight lines. Shots Star Fish Prime and King Fish had a slope of a slightly positive nature. Theoretically, in a vacuum, RD^2 versus D plots yield a straight, horizontal line. A negative slope has generally been interpreted to be caused by air attenuation and scattering of the gamma radiation. A positive slope, as obtained for Shots Star Fish Prime and King Fish, can be attributed to a softening of the neutron spectrum as distance increases. A softer neutron spectrum would produce a larger apparent gamma dose due to the inaccuracy of the neutron correction factors and would substantiate the justification of a slightly positive slope.

Shot Blue Gill Triple Prime exhibits essentially a horizontal line. It is not possible to say at present whether this good agreement with the RD^2 versus D law is real or if, within experimental error, the line does exhibit a slight positive slope similar to the other events.

In the construction of the RD^2 versus D plot for Shot Star Fish Prime, only the dosimeters from gamma container

number 1 of Pod S-1 were used. Because of the misorientation of the S-1 Pod, (see Chapter 2), only the number 1 container was directly exposed to the radiation. Containers 2 and 3 were shielded by much of the pod mass including the steel ballast and the flywheel of the stabilization system.

The corrected cobalt plate data obtained from the neutron containers immediately adjacent to the backplate exhibit greater agreement with the $AgPO_3$ glass rods and the photographic film. Due to the thermalization of neutrons by the pod mass, the cobalt plates in the gamma containers show consistently higher values and are not used in the construction of the respective curves (Figures 4.1 and 4.2).

4.2 CORRELATION WITH PREVIOUS TEST DATA

All weapon -test data in the past has been correlated by scaling to a reference yield and a standard air density. The measurement of gamma dose at extremely high altitudes is a new area, and the comparison of data from the shots in this series with the data obtained from past series is extremely difficult.

In order to predict gamma doses, the following expression has been used (Reference 38):

$$\frac{D_\gamma R^2}{W h_{eff}} = (1.93 \times 10^9) \exp \left(\frac{\bar{\rho} R}{324} \right) \qquad (4.1)$$

Where

D_γ = total initial gamma dose, r

R = distance from detonation, yards

W = weapon yield, kt

h_{eff} = effective hydrodynamic scaling factor

$\bar{\rho}$ = relative air density

Assuming h_{eff} is equal to unity and the relative air density approaches zero, Equation 4.1 can be reduced as follows:

$$\frac{D_\gamma R^2}{W} = (1.93 \times 10^9) \qquad (4.2)$$

Utilizing Equation 4.2, doses were predicted for each pod on all three events, and the predicted doses are shown compared to those actually measured in Table 4.1.

Figure 4.1 shows the gamma doses measured by each type of detector in all recovered pods on Shots Star Fish Prime, Blue Gill Triple Prime, and King Fish plotted as dose per kiloton of yield versus distance.

Figure 4.2 demonstrates an RD^2 versus D plot utilizing the gamma pod doses per kiloton yield. Also included is the theoretical dose curve predicted from Equation 4.2.

It is readily apparent from Table 4.1 and Figure 4.2, that the predicted gamma dose was higher than the measured dose. This discrepancy can not be fully explained at this time.

4.3 ESTIMATED DIFFERENTIAL THERMAL NEUTRON FLUX

Project 2.1 (Reference 36) reports that the thermal neutron flux on Shot Blue Gill Triple Prime is of questionable validity due to the small difference between the unshielded gold foils and cadmium-shielded foils. This difference is primarily in the second decimal place, and Project 2.1 reports that the flux interpretation is left to the discretion of the reader.

Cobalt glass plates were exposed in the neutron detector packages of Project 2.1 and also in this Project's gamma detector packages. It has been reported that these cobalt plates have a thermal neutron response of [ ] per 1 rad of gamma radiation. If there were a large incident thermal neutron

flux on the pod backplate, the cobalt glass plates in the neutron containers would register an apparently larger gamma dose than actually present. The $AgPO_3$ rods in the gamma containers exhibit a very small thermal neutron response, and due to this low response, a large thermal flux would result in essentially no increase in the apparent gamma dose. The cobalt glass plates located on the backplate for Shot Blue Gill Triple Prime read a gamma dose that was within experimental error of the dose as measured by the $AgPO_3$ rods. This is a good indication that the incident thermal flux to the backplate was smaller than as a flux of would give an increase in apparent gamma dose of which does not appear in the data shown in Table 3.4.

The discussion presented above substantiates the fact that the incident thermal neutron flux to the pod backplate for Shot Blue Gill Triple Prime, as estimated by this project, agrees in the order of magnitude with that obtained by Project 2.1.

Since there were cobalt plates very near the pod backplate and also located deep inside the pod on the central support plate, any difference in readings of the two dosimeters could be attributed to the thermalization of fast neutrons by the pod mass. The cobalt plates are relatively insensitive to fast neutrons, and therefore, any change in the fast neutron flux would not be seen. As shown in Table 3.7, there is an appreciable difference in the readings; those in the gamma packages being higher due to a higher thermal flux. Utilizing this difference, the differential thermal neutron flux between the pod backplate and central support plate was calculated for Shots Blue Gill Triple Prime and King Fish and reported in Table 3.7.

4.4 GAMMA DOSE PER KILOTON VERSUS DISTANCE

Figure 4.1 gives the average gamma doses per kiloton versus distance, measured for Shots Star Fish Prime, Blue Gill Triple Prime, and King Fish. As can be observed, all the data lies on a smooth curve and scales from the megaton range into the kiloton region very well. Figure 4.2, dose per kiloton times distance squared versus distance, gives a straight line and can be used as a system for the prediction of gamma doses for future detonations at a relative air density approaching zero (extremely high altitude).

4.5 EFFECT OF POD MASS ON SHIELDING OF THE GAMMA DOSE

The shielding effects of the pod mass is an unknown factor at present. As demonstrated by the S-1 Pod of Shot Star Fish Prime, shielding was a prime reason for the discrepancy in gamma dose values reported for the three dosimeter containers. The pod mass also was extremely important in thermalizing a large number of neutrons as shown by Table 3.7 and described in detail in Section 4.3.

The gamma contribution from the (n,γ) reaction of neutrons with the pod construction materials or pod components was negligible. In order to be a contributor for Shots King Fish and Blue Gill Triple Prime, the secondary gamma production would have had to exceed 10^5 rads. This value is not theoretically feasible from the observed neutron fluxes. If secondary gamma production had been a contributor for Shot Star Fish Prime, deviations would have been observed in the gamma dose versus distance plots when compared to the other shots of this series. All data from the three events scale nicely, discounting any significant secondary gamma production.

4.6 DATA RELIABILITY

When evaluating the total error in this experiment there are many factors which must be considered; (1) inherent uncertainties in the individual dosimeters, (2) uncertainties in the neutron data utilized for corrections, (3) uncertainties of the empirical neutron correction factors, (4) the unknown effects of the pod mass, instrumentation, and environmental changes, (5) pod orientations to the detonation, and (6) errors in the slant distance measurements (pod positions relative to burst). These factors are of unknown magnitudes, and experimental error can only be estimated until more information about these uncertainties is known. It is estimated that the gamma dose measurements for the three shots may have a ±50 percent error. The data in Table 4.1 are average values for all the pods from the three shots and as such are considered to be representative, within experimental error, of the true gamma doses. The precision of the measurements for the various detectors, based on the average values, was calculated to be within 30 percent for film, 10 percent for $AgPO_3$, and 10 percent for the cobalt activated borosilicate glass.

4.7 INDIVIDUAL GAMMA DETECTOR PERFORMANCE

The photographic film dosimetry gave acceptable values for all film types except 649-0. It is felt that more study is needed to establish the fast neutron correction values for this film, and therefore, all 649-0 film data is uncorrected. Figure 4.3 shows negative prints of selected pieces of exposed dosimetry film. It is readily apparent that the film underwent varying amounts of shielding from the pod mass or from other project instrumentation. The light areas of the film (absorbed

radiation) were used in interpreting the dose from each individual film. Due to the relatively large size of the film compared to the glass rods or cobalt plates, shielding would show its greatest differential effects on the film. Therefore, the $AgPO_3$ and cobalt data are considered to be slightly more accurate. Figure 4.3 also gives support to the fact that only an estimate of percent error can be given at this time.

The $AgPO_3$ glass rods performed well and gave results within designed experimental error.

Due to a lower thermal neutron flux, the data from the cobalt plates located in the neutron containers of Project 2.1 are considered more characteristic of the true gamma dose. The thermalization data provided by the cobalt plates were an important additional benefit obtained from these dosimeters. Their high range was a disadvantage in Shot Star Fish Prime, and further study is needed to develop techniques for extending their lower detection limits.

The formic acid dosimeters yielded no useable gamma data. Work that has been performed (Reference 35) since the events has demonstrated unquestionably that the formic acid system, as used in this experiment, is highly rate dependent at dose rates several orders of magnitude less than those encountered in high-altitude weapon tests.

In event Star Fish Prime, manganese-activated CaF_2 thermoluminescent dosimeters were exposed, and the measured dose was generally high compared to the corresponding readings of the other systems. This difference can not be explained fully, but the rate dependence of these dosimeters has been studied only to 120 rads/sec which is considerably lower than that

expected at these events. Experimental work on the dose-rate dependence of the thermoluminescent system must be accomplished before a more definitive statement can be made for the observed discrepancies.

pages 54-56 deleted

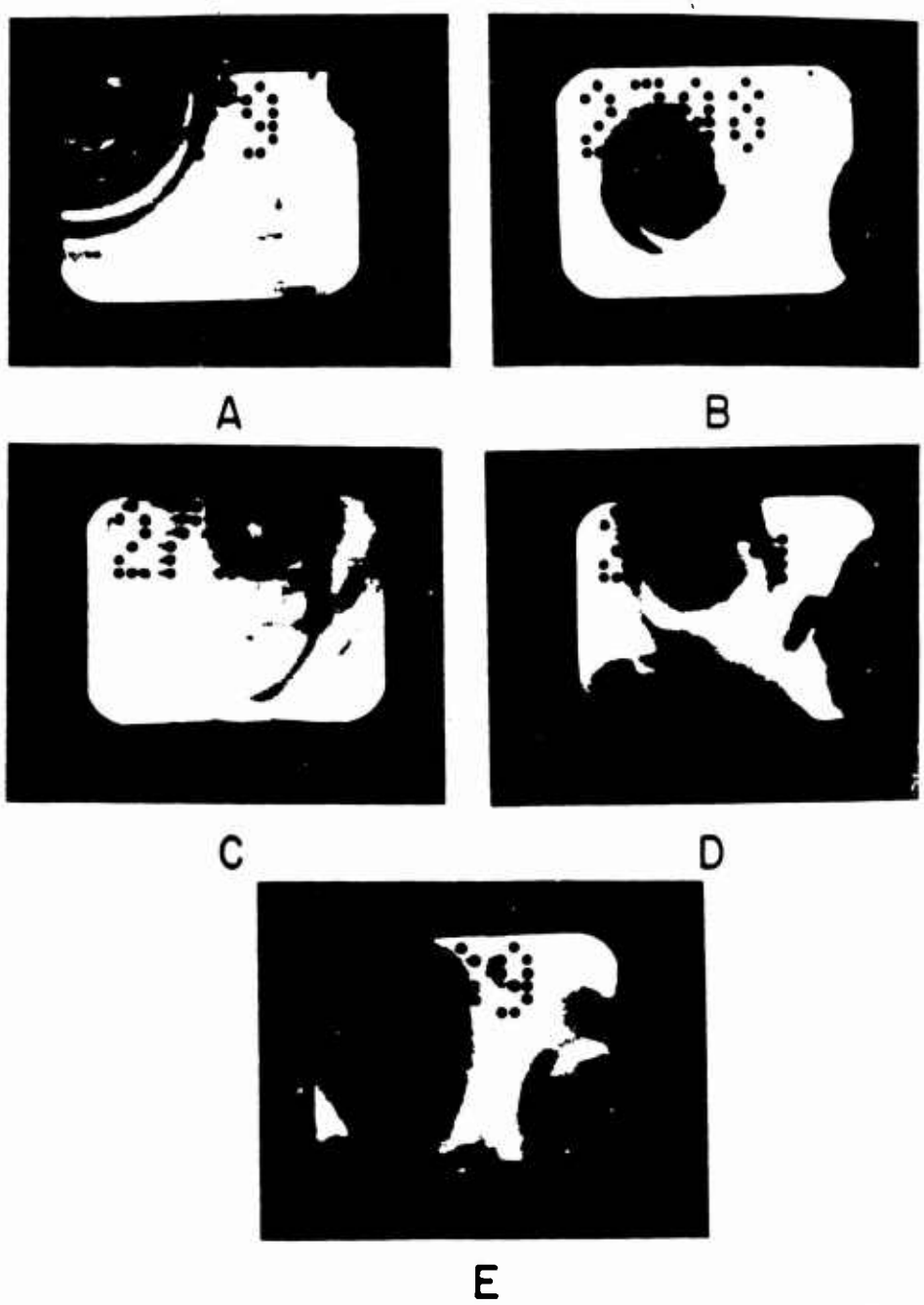

Figure 4.3 Photographic dosimetry film from Shots Blue Gill Triple Prime and King Fish (negative contact prints).

Identification Code:

Symbol	Film Number	Shot	Pod	Gamma Container Number
A	2779	Blue Gill Triple Prime	3	1
B	2738	Blue Gill Triple Prime	3	2
C	2792	King Fish	1	1
D	2794	King Fish	1	2
E	2789	King Fish	1	3

CHAPTER 5

CONCLUSIONS AND RECOMMENDATIONS

5.1 CONCLUSIONS

Project 2.2 successfully measured the gamma dose versus distance from Shots Star Fish Prime, Blue Gill Triple Prime, and King Fish.

The gamma doses from all events were within designed experimental error and precision.

The measured gamma doses from the three events scaled well as dose per kiloton versus distance. The theoretically predicted doses were [ ] than the measured doses.

The incident thermal neutron flux on the pod backplate for Shot Blue Gill Triple Prime as estimated by this project agreed in order of magnitude with that reported by Project 2.1.

By the use of cobalt-activated borosilicate glass plates at two different locations in the instrument pods, Project 2.2 was able to measure the differential thermal neutron flux created by the thermalization of fast neutrons by the pod mass.

The formic acid chemical dosimeter proved to be unreliable due to its high dose-rate dependence.

The CaF_2 thermoluminescent dosimeter provided readings that were considerably higher than those measured by the other detectors. Further rate dependence studies are necessary to explain this discrepancy.

5.2 RECOMMENDATIONS

In future tests, it is recommended that the gamma dosimeters be placed close to the exterior of the vehicle in order to minimize shielding by the pod or by instrument masses.

Experimental work should be continued on new gamma detection systems, and study should continue on the neutron interactions and the corresponding correction values. The dose-rate dependence of all the gamma detectors should be studied to better evaluate data taken at future tests.

REFERENCES

1. P. W. Ifland; "The Relative Importance of Nuclear Radiation from Atomic Weapons Detonated at High Altitudes"; AFSWP-500; Armed Forces Special Weapons Project, Washington, D. C. SECRET-RESTRICTED DATA.

2. J. B. Graham and others; "Gamma Exposure Versus Distance"; Project 2.1, Operation Teapot, WT-1115, October 1959; U. S. Army Signal Research and Development Laboratory, Fort Monmouth, New Jersey; SECRET-RESTRICTED DATA.

3. H. C. Henry; "Shot Yucca, A Very High Altitude Nuclear Detonation"' Project 9.2, Operation Hardtack, ITR-1654, July 1958; Armed Forces Special Weapons Project, Washington, D. C., SECRET-FORMERLY RESTRICTED DATA.

4. T. D. Hanscome and others; "Neutron Flux from Very High Altitude Bursts"; Project 2.6, Operation Hardtack, WT-1623, May 1961; U. S. Naval Research Laboratory, Washington, D. C., SECRET-RESTRICTED DATA.

5. R. D. O'Rourke; "Growth of the Fireball"; AFSWP-857; Armed Forces Special Weapons Project, Washington, D. C.; SECRET-RESTRICTED DATA.

6. A. Latter and R. Latter; "Sunlamp Calculations"; Rand Corporation Report 1956; Santa Monica, California; Unclassified.

7. R. J. Smith; "Thermal and Fast Neutron Effects on Dosimeter Films"; NDL-TR-13, October 1961; U. S. Army Nuclear Defense Laboratory, Army Chemical Center, Maryland; Unclassified.

8. J. Cryden and F. P. Gibson; "Evaluation of Dosimetric

Materials"; Project 6.1b, Operation Buster, WT-317; Signal Corps Engineering Laboratories and U.S. Navy Bureau of Ships; March 1952; CONFIDENTIAL-FORMERLY RESTRICTED DATA.

9. P. Brown and others; "Gamma Exposure Versus Distance"; Project 2.1, Operation Redwing, WT-1310, February 1960; U. S. Army Signal Engineering Laboratories, Ft. Monmouth, New Jersey; SECRET-RESTRICTED DATA.

10. G. V. LeRoy, "Miscellaneous Studies of Dosimeters"; Annex 2.10, Scientific Director's Report of Atomic Weapons Tests at Eniwetok, 1951; Operation Greenhouse; University of Chicago, Chicago, Illinois; November 1951; Unclassified.

11. E. N. York, R. E. Boyd, and J. A. Blaylock; "Initial Neutron and Gamma Air-Earth Interface Measurements"; Project 2.10, Operation Plumbbob, WT-1419, February 1960; Air Force Special Weapons Center, Kirtland Air Force Base, New Mexico; CONFIDENTIAL-RESTRICTED DATA.

12. G. W. Imirie and others; "Depth-Dose Studies in Phantoms with Initial Bomb Gamma and Neutron Radiation"; Project 39 8, Operation Plumbbob, WT-1508, July 1959; Naval Medical Research Institute, Bethesda, Maryland, and Brookhaven National Laboratory, Upton, New York; SECRET-RESTRICTED DATA.

13. D. R. Griesmer and others; "Gamma Radiation and Induced Activity from Very-Low-Yield Bursts"; Project 2.13, Operation Hardtack, WT-1681, October 1960; Air Force Special Weapons Center, Kirtland Air Force Base, New Mexico, SECRET-RESTRICTED DATA.

14. S. Kondo; "Neutron Response of Silver-Activated Phosphate Glass"; Health Physics, Vol. 4, No. 1, Page 21-24; October 1961.

15. C. H. Bernard, W. T. Thornton, and J. A. Auxier; "Silver Metaphosphate Glass for X-Ray Measurements in Coexistant Neutron and γ Radiation Fields"; Health Physics, Vol. 4, Pages 236-243: 1961.

16. G. V. Taplin, and others; "Comparison and Evaluation of Dosimetry Methods Applicable to Gamma Radiation"; Project 29.1, Operation Upshot-Knothole, WT-802, School of Medicine, University of California at Los Angeles, California, September 1953; CONFIDENTIAL-RESTRICTED DATA.

17. R. H. Dempsey, and others; "Gamma Radiation Exposure"; Project 2.1, Operation Castle, WT-912, Signal Corps Engineering Laboratories, Ft. Monmouth, New Jersey, March 1959; SECRET-FORMERLY RESTRICTED DATA.

18. P. S. Harris and others; "Physical Measurement of Neutron and Gamma Radiation Dose from High Neutron Yield Weapons and Correlation of Dose With Biological Effect"; Project 39.7, Operation Teapot, ITR-1167, April 1955; SECRET-RESTRICTED DATA.

19. S. C. Sigoloff and others; "Radiation Measuremeents Utilizing the USAF Chemical Dosimeters"; Project 39.1, Operation Plumbbob, WT-1500, USAF School of Aviation Medicine, Randolph Air Force Base, Texas, February 1960; SECRET-RESTRICTED DATA.

20. J. S. Malik; "The Measurement of Gamma-Ray Intensity vs Time"; Project 10.6, Operation Buster-Jangle, WT-356, June 1952; Los Alamos Scientific Laboratory, Los Alamos, New Mexico; UNCLASSIFIED.

21. D. C. Berg and C. Eisenhauer; "Spectrum and Attenuation of Initial Gamma Radiation from Nuclear Weapons"; AFSWP-502B; Armed Forces Special Weapons Project, Washington, D. C.; SECRET-RESTRICTED DATA.

22 Arthur J. Starnes et al; "Pod and Recovery Unit Fabrication"; Fish Bowl, Project 9.4b, Operation Dominic, POR-2041; Air Force Special Weapons Center, Kirtland Air Force Base, New Mexico; SECRET-RESTRICTED DATA.

23. C. M. Gillespie et al; "Nuclear Weapon X-Ray Effects as Measured by Passive Instruments"; Fish Bowl, Project 8B, Operation Dominic, POR-2038; Air Force Special Weapons Center, Kirtland Air Force Base, New Mexico; SECRET-RESTRICTED DATA.

24. R. G. Larrick, O. E. Johnson, and R. G. Marmiroli; "Initial Gamma Exposure Versus Distance"; Project 6.8a, Operation Upshot-Knothole, WT-756, April 1955; Signal Corps Engineering Laboratories, Ft. Monmouth, New Jersey; SECRET-RESTRICTED DATA.

25. M. Ehrlich; "Photographic Dosimetry of X and Gamma Rays"; NBS Handbook 57, August 1954; U. S. Department of Commerce, National Bureau of Standards, Washington, D. C.; Unclassified.

26. G. E. Blair; "Applications of Radiation Effects in Glasses in Low and High-Level Dosimetry"; Journal of the American Ceramic Society, 43, 87, Pages 426-429; 1960; Unclassified.

27. P. K. Lee, E. R. Ballinger, and W. H. Schweitzer; "A Heat Treatment Which Extends the Usable Range of $AgPO_3$ Glass Dosimeters"; LA-2575, September 1961; Los Alamos Scientific Laboratory, Los Alamos, New Mexico; Unclassified.

28. A. O. Allen and others; "Decomposition of Water and Aqueous Solutions Under Pile Radiation"; ORNL-130, Oak Ridge National Laboratory, Oak Ridge, Tennessee, October 1949; Unclassified.

29. E. J. Hart and P. D. Walsh; "Dosimetry of Gamma Ray and Neutron Fluxes in CP-5"; 2nd U. N. Conference on Peaceful Uses of Atomic Energy; Vol. 29, Page 38-42, September 1959; Unclassified.

30. E. J. Hart; "The Radical Pair Yield of Ionizing Radiation in Aqueous Solutions of Formic Acid"; Journal of Physical Chemistry, Vol. 56, Pages 594-599, May 1952; Unclassified.

31. E. J. Hart; "Gamma-Ray Induced Oxidation of Aqueous Formic Acid-Oxygen Solutions; Effect of pH"; Journal of American Chemical Society, Vol. 76, Pages 4198-4201, August 1954; Unclassified.

32. R. A. Anderson and E. J. Hart; "Molecular Products and Free Radical Yields in the Decomposition of Water by Protons, Deuterons and Helium Ions"; Radiation Research, Vol. 14, No. 6, Pages 689-691, June 1961; Unclassified.

33. R. J. Smith, and R. F. Benck, "Fission Neutron Effects on a Variety of Gamma Dosimeters"; NDL-TR-37; August 1962; Unclassified.

34. J. H. Schulman and others; "New Thermoluminescent Dosimeter"; Review of Scientific Instruments, Vol. 31, No. 12, Pages 1263-1269, December 1960; Unclassified.

35. J. K. Thomas and E. J. Hart; "The Radiolysis of Aqueous Solutions at High Intensities"; Radiation Research, Vol. 17, No. 3, Pages 408-418; 3 September 1962; Unclassified.

36. J. W. Kinch; "External Neutron Flux Measurements"; Operation Dominic, Fish Bowl Project 2.1, POR-2012; U.S. Army Nuclear Defense Laboratory, Edgewood Arsenal, Maryland; Secret Restricted Data.

37. D. L. Rigotti and others; "Integrated Gamma Dose Measurements"; Project 2.4, Operation Sun Beam, POR-2265, May 1963; U. S. Army Nuclear Defense Laboratory, Edgewood Arsenal, Maryland; SECRET-RESTRICTED DATA.

38. "The Nuclear Radiation Handbook"; AFSWP-1100, Nuclear Development Corporation of America, White Plains, New York, 25 March 1957; SECRET-RESTRICTED DATA.