(2)

WT-17 (REF. REPORT) (EX)
EXTRACTED VERSION

OPERATION GREENHOUSE

AD-A995 276

SCIENTIFIC DIRECTOR'S REPORT

ANNEX 1.1 PROMPT-GAMMA-RAY MEASUREMENTS

PART IV INSTALLATION DRAWINGS

NUCLEAR EXPLOSIONS

1951

Naval Research Laboratory
Washington, D. C.

October 1951

DTIC FILE COPY

NOTICE

This is an extract of WT-17, which remains classified SECRET/RESTRICTED DATA as of this date.

DTIC
ELECTE
MAY 8 1985
S D
D

Extract version prepared for:

Director

DEFENSE NUCLEAR AGENCY

Washington, D. C. 20305

Approved for public release;
distribution unlimited.

31 October 1984

85 5 07 091

Best
Available
Copy

UNCLASSIFIED

SECURITY CLASSIFICATION OF THIS PAGE (When Data Entered)

REPORT DOCUMENTATION PAGE		READ INSTRUCTIONS BEFORE COMPLETING FORM
1. REPORT NUMBER WT-17 (EX)	2. GOVT ACCESSION NO.	3. RECIPIENT'S CATALOG NUMBER
4. TITLE (and Subtitle) SCIENTIFIC DIRECTOR'S REPORT ANNEX 1.1 PROMPT-GAMMA-RAY MEASUREMENTS PART IV INSTALLATION DRAWINGS		5. TYPE OF REPORT & PERIOD COVERED 6. PERFORMING ORG. REPORT NUMBER WT-17 (EX)
7. AUTHOR(s) Wayne C. Hall Naval Research Laboratory Staff		8. CONTRACT OR GRANT NUMBER(s)
9. PERFORMING ORGANIZATION NAME AND ADDRESS Naval Research Laboratory Washington, DC		10. PROGRAM ELEMENT, PROJECT, TASK AREA & WORK UNIT NUMBERS
11. CONTROLLING OFFICE NAME AND ADDRESS		12. REPORT DATE October 1951 13. NUMBER OF PAGES
14. MONITORING AGENCY NAME & ADDRESS (if different from Controlling Office)		15. SECURITY CLASS. (of this report) UNCLASSIFIED 15a. DECLASSIFICATION/DOWNGRADING SCHEDULE

16. DISTRIBUTION STATEMENT (of this Report)

Approved for public release; unlimited distribution.

17. DISTRIBUTION STATEMENT (of the abstract entered in Block 20, if different from Report)

18. SUPPLEMENTARY NOTES

This report has had the classified information removed and has been republished in unclassified form for public release. This work was performed by Kaman Tempo under contract DNA001-83-C-0286 with the close cooperation of the Classification Management Division of the Defense Nuclear Agency.

19. KEY WORDS (Continue on reverse side if necessary and identify by block number)

Operation GREENHOUSE
Prompt-Gamma-Ray Measurements
Installation Drawings

20. ABSTRACT (Continue on reverse side if necessary and identify by block number)

This report consists of drawings and tabular data pertinent to the various measurements performed ~~by the NRLH group~~ in Operation Greenhouse. The drawings represent the plans for the cable installations, recorder stations, power and signal lines, and other equipment used in the measurement of prompt gamma rays, alpha, transit time, neutron intensity (Tenex), and thermal radiation. Keywords

Symbols used in the drawings are: A+, transit time; B+, prompt gamma; C+, Tenex.

include: Nuclear explosion testing, and NTPR (Nuclear Test Personnel Report

DD FORM 1 JAN 73 1473 EDITION OF 1 NOV 65 IS OBSOLETE

UNCLASSIFIED

SECURITY CLASSIFICATION OF THIS PAGE (When Data Entered)

FOREWORD

This report has had classified material removed in order to make the information available on an unclassified, open publication basis, to any interested parties. This effort to declassify this report has been accomplished specifically to support the Department of Defense Nuclear Test Personnel Review (NTPR) Program. The objective is to facilitate studies of the low levels of radiation received by some individuals during the atmospheric nuclear test program by making as much information as possible available to all interested parties.

The material which has been deleted is all currently classified as Restricted Data or Formerly Restricted Data under the provision of the Atomic Energy Act of 1954, (as amended) or is National Security Information.

This report has been reproduced directly from available copies of the original material. The locations from which material has been deleted is generally obvious by the spacings and "holes" in the text. Thus the context of the material deleted is identified to assist the reader in the determination of whether the deleted information is germane to his study.

It is the belief of the individuals who have participated in preparing this report by deleting the classified material and of the Defense Nuclear Agency that the report accurately portrays the contents of the original and that the deleted material is of little or no significance to studies into the amounts or types of radiation received by any individuals during the atmospheric nuclear test program.

DTIC COPY INSPECTED

Accession For
NTIS GRA&I ☒
DTIC TAB ☐
Unannounced ☐
Justification

By
Distribution/
Availability Codes
Dist | Avail and/or Special
A-1

ILLUSTRATIONS

		Page
1	General Cable Arrangement at Site C	12
2	Recording Equipment in Station 6a at Site C: Front View	13
3	Cable Arrangement for Ionization-chamber Recording Equipment at Site C	14
4	Cable Arrangement for Scintillation-detector Recording Equipment at Site C	15
5	Arrangement of Equipment in Station 6a at Site C	16
6	Cable Arrangement for Transit-time and Prompt-gamma Equipment at Site C	17
7	Arrangement of Equipment in Station 6b at Site C	18
8	Layout of Cables and External Equipment at Site C: Part 1	19
9	Layout of Cables and External Equipment at Site C: Part 2	20
10	General Cable Arrangement at Site E	26
11	Recording Equipment in Station 6a at Site E	27
12	Cable Arrangement for Alpha-recording Equipment at Site E	28
13	Arrangement of Equipment in Station 6a at Site E	29
14	Cable Arrangement for Transit-time, Prompt-gamma, and Tenex Equipment at Sites E, V, and E+	30
15	Arrangement of Equipment in Station 6b at Sites E, V, and E+	31
16	Layout of Cables and External Equipment at Site E: Part 1	32
17	Layout of Cables and External Equipment at Site E: Part 2	33
18	General Cable Arrangement at Site V	38
19	Recording Equipment in Station 6a at Site V: Front View	39
20	Cable Arrangement for Alpha-recording Equipment at Site V	40
21	Arrangement of Equipment in Station 6a at Site V	41
22	Layout of Cables and External Equipment at Site V: Part 1	42
23	Layout of Cables and External Equipment at Site V: Part 2	43
24	Layout of Cables and External Equipment at Site V: Part 3	44
25	General Cable Arrangement at Site E+	49
26	Recording Equipment in Station 6a at Site E+: Front View	50
27	Cable Arrangement for Alpha-recording Equipment at Site E+	51
28	Arrangement of Equipment in Station 6a at Site E+	52
29	Layout of Cables and External Equipment at Site E+: Part 1	53
30	Layout of Cables and External Equipment at Site E+: Part 2	54
31	Scintillation-detector Installation on Tower at Site E+	55
32	Connection Detail for Signal Cable	61
33	Power Distribution Panel: Schematic Diagram	62
34	Twenty-four-volt Distribution Panel	63
35	Housing and Connection Details for High-voltage Power Supply	64
36	First Method of Gas-filling and Pressurizing Coaxial Cables	65
37	Preferred Method of Gas-filling and Pressurizing Coaxial Cables	66
38	Method of Supporting Coaxial Cable at Top of Catenary	67
39	Typical Catenary Installation	68
40	Method of Supporting Scintillation-detector and Condenser Assemblies	69
41	Location of Detectors for Transit-time, Prompt-gamma, and Tenex Equipment	70
42	Special Flange for $3\frac{1}{8}$- to $\frac{7}{8}$-in. Reducer	71

Page

43 Relay Box 72
44 Relay-box Wiring Diagram 73
45 Power and Control for Bolometer Equipment at Sites C and M: Wiring Diagram 74
46 Power and Control for Bolometer Equipment at Sites E, V, E+, N, and P: Wiring Diagram 75
47 Motor-generator Connection 76
48 Signal Box 77
49 Signal-box Wiring Diagram 78
50 Camera Delay Circuit 79
51 Alternating-current Distribution Panel 80
52 High-speed Spectrograph Film Drive 81
53 Condenser-Detector Bullets 82
54 Electric Oven: Assembly 83
55 Electric Oven: Details, Part 1 84
56 Electric Oven: Details, Part 2 85
57 Electric Oven: Details, Part 3 86
58 Ionization Chamber: Assembly 87
59 Ionization Chamber: Details, Part 1 88
60 Ionization Chamber: Details, Part 2 89
61 Ionization Chamber: Details, Part 3 90
62 Seven-ohm Ionization Chamber: Assembly 91
63 Seven-ohm Ionization Chamber: Details, Part 1 92
64 Seven-ohm Ionization Chamber: Details, Part 2 93
65 Cable Clamp and Support for 7/8-in. Line 94
66 Lead Shield 95
67 Scintillation Detector and Condenser: Mounting Assembly 96
68 Scintillation Detector and Condenser: Mounting Details 97
69 Ionization Chamber and Condenser: Mounting Assembly 98
70 Detector Connector: Assembly and Details 99
71 Gas-barrier Assembly 100
72 Standard 20-ft Section of 3 1/8-in. Coaxial Assembly 101
73 Standard 20-ft Section of 1 5/8-in. Coaxial Assembly 102
74 Coaxial Reducer from 3 1/8 to 7/8 In. 103
75 Gas-barrier Bypass 104
76 Electrical-test Assembly in Detector-Condenser Housing 105

TABLES

1 Cables at Site C 21
2 Cables at Site E 34
3 Cables at Site V 45
4 Cables at Site E+ 56

ABSTRACT

This report consists of drawings and tabular data pertinent to the various measurements performed by the NRLH group in Operation Greenhouse. The drawings represent the plans for the cable installations, recorder stations, power and signal lines, and other equipment used in the measurement of prompt gamma rays, alpha, transit time, neutron intensity (Tenex), and thermal radiation.

Symbols used on the drawings are: A+, transit time; B+, prompt gamma; C+, Tenex.

ACKNOWLEDGMENTS

The drawings shown in this report were the joint work of the Naval Research Laboratory-Hall (NRLH) staff but were the direct responsibility of S. D. Summers and Capt. D. W. McElwee (U. S. Army Signal Corps).

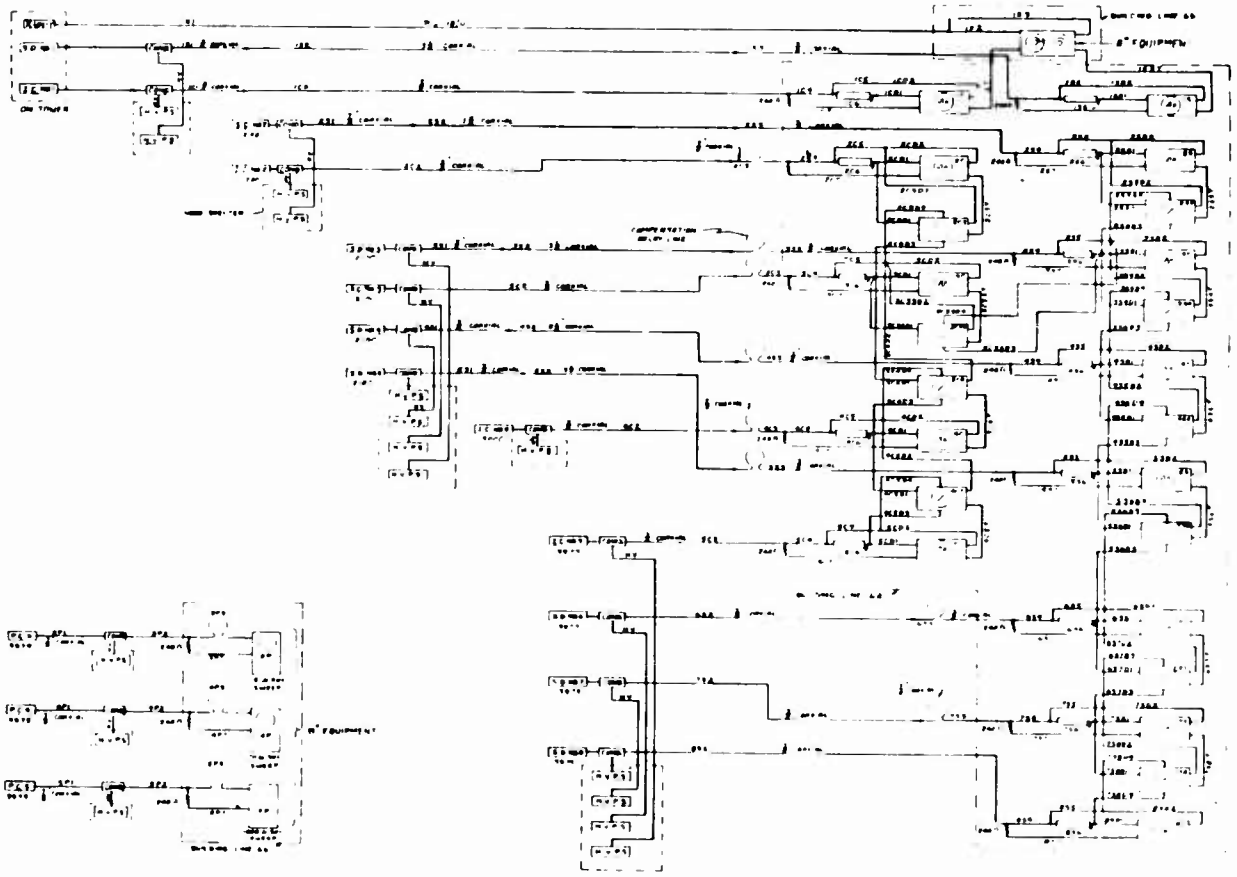

Fig. 1—General cable arrangement at Site C.

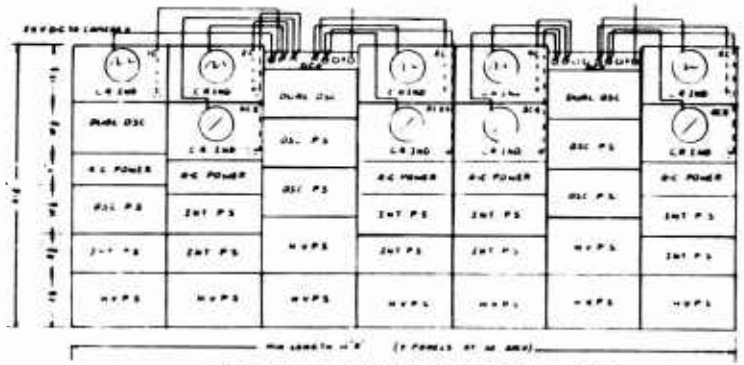

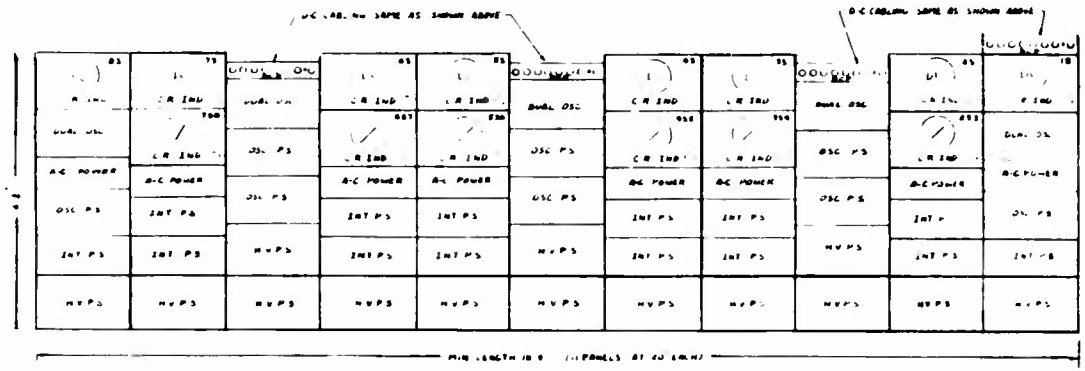

Fig. 2—Recording equipment in station 6a at Site C: Front view.

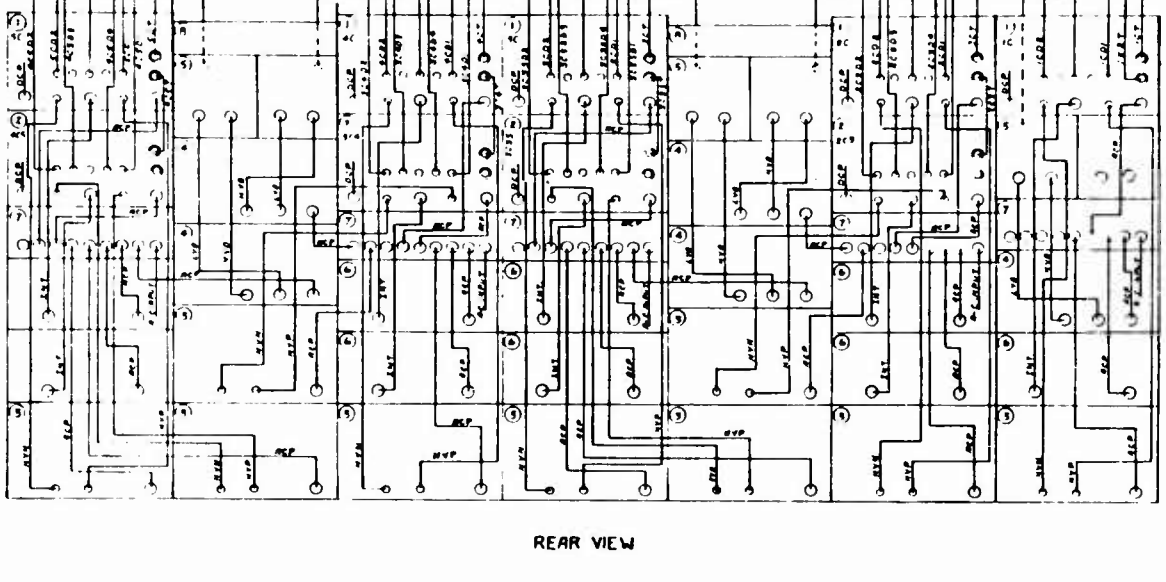

REAR VIEW

LEGEND

1. CATHODE-RAY INDICATOR (G. PAR)
2. CATHODE-RAY INDICATOR (X Y TIMER)
3. HIGH-VOLTAGE POWER SUPPLY
4. OSCILLATOR POWER SUPPLY
5. DUAL OSCILLATOR
6. INTENSIFIER POWER SUPPLY
7. A C DISTRIBUTION PANEL
8. D C DISTRIBUTION PANEL

Fig. 3—Cable arrangement for ionization-chamber recording equipment at Site C.

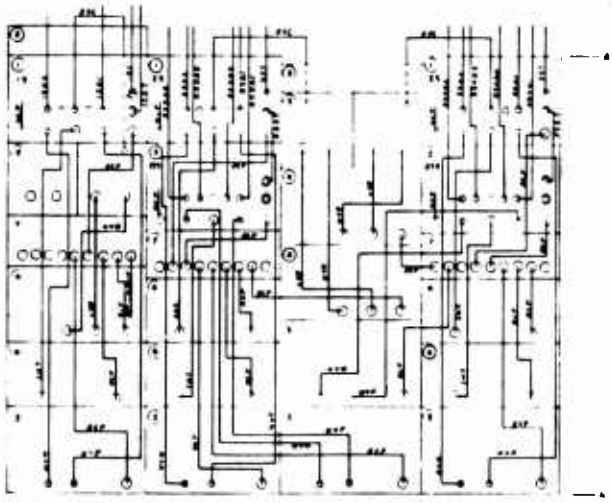

REAR VIEW

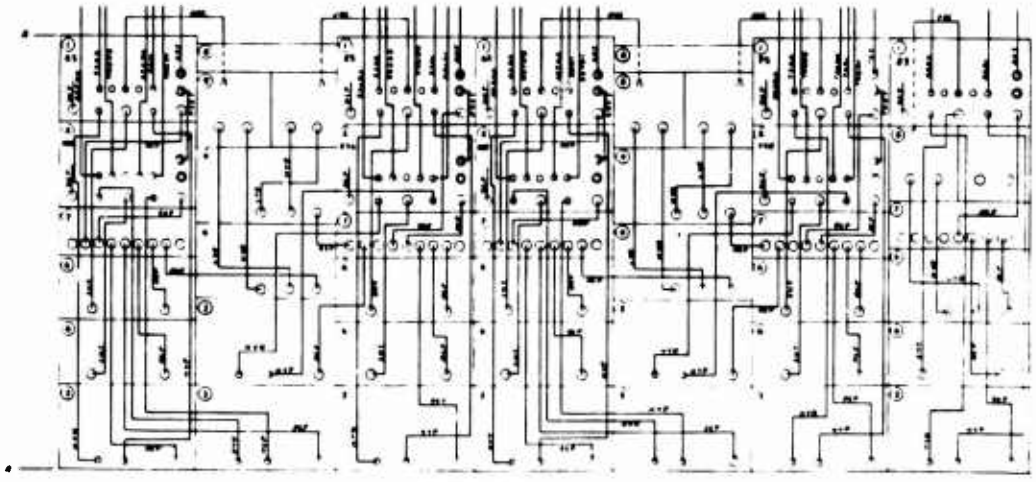

REAR VIEW

LEGEND

1. CATHODE RAY INDICATOR (ALPHA)
2. CATHODE RAY INDICATOR (X Y TRACE)
3. HIGH VOLTAGE POWER SUPPLY
4. OSCILLATOR POWER SUPPLY
5. DUAL OSCILLATOR
6. AMPLIFIER POWER SUPPLY
7. A.C. POWER DISTRIBUTION PANEL
8. D.C. POWER DISTRIBUTION PANEL

Fig. 4—Cable arrangement for scintillation-detector recording equipment at Site C.

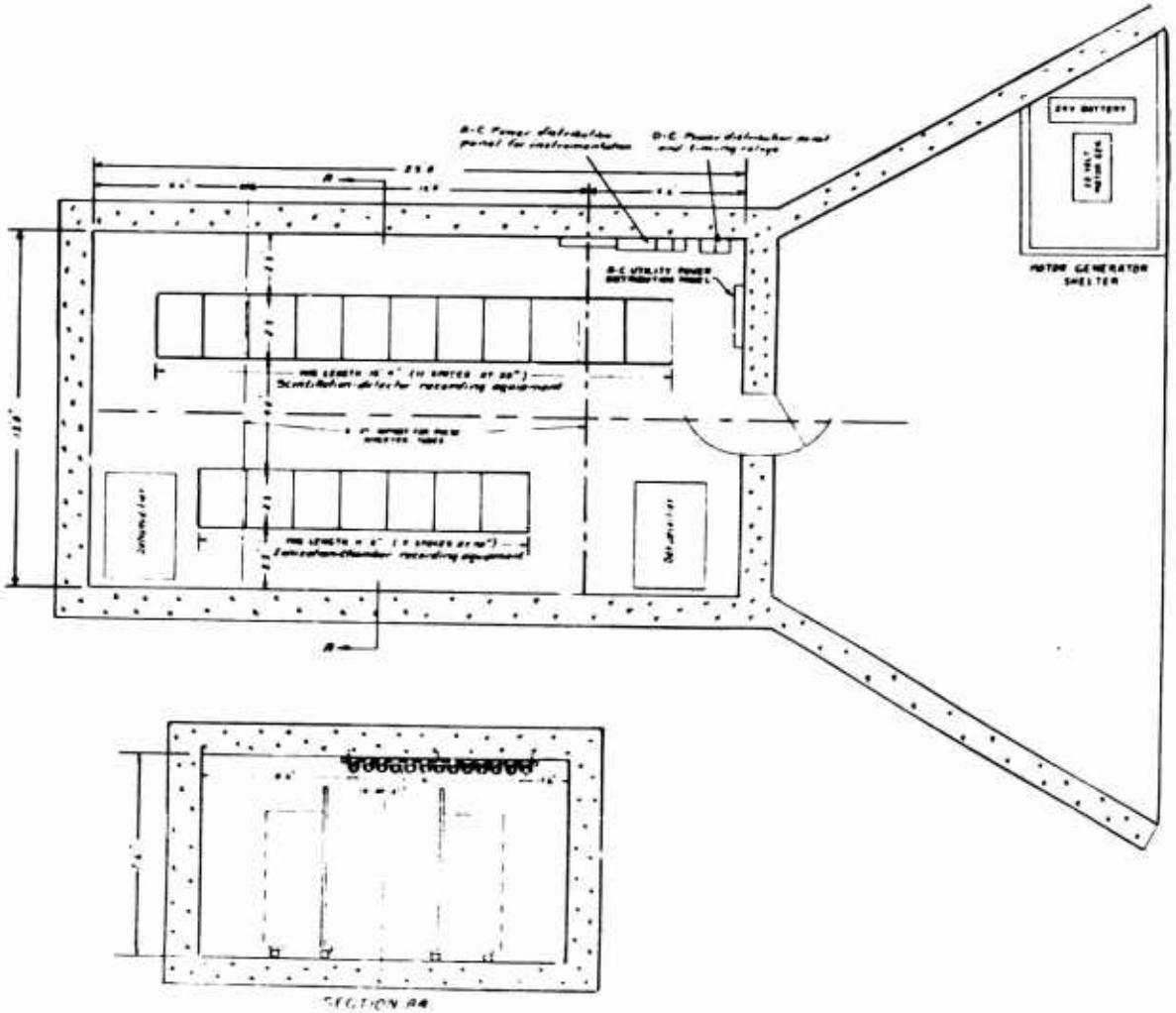

Fig. 5—Arrangement of equipment in station 6a at Site C.

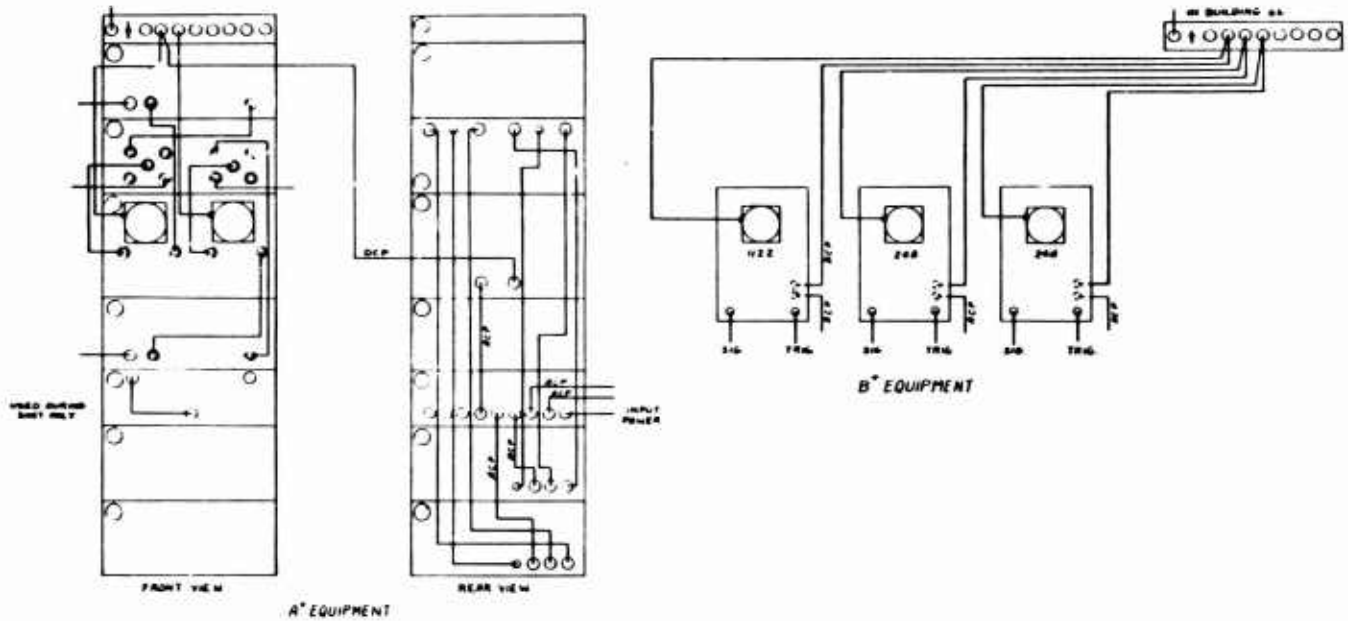

Fig. 6—Cable arrangement for transit-time and prompt-gamma equipment at Site C.

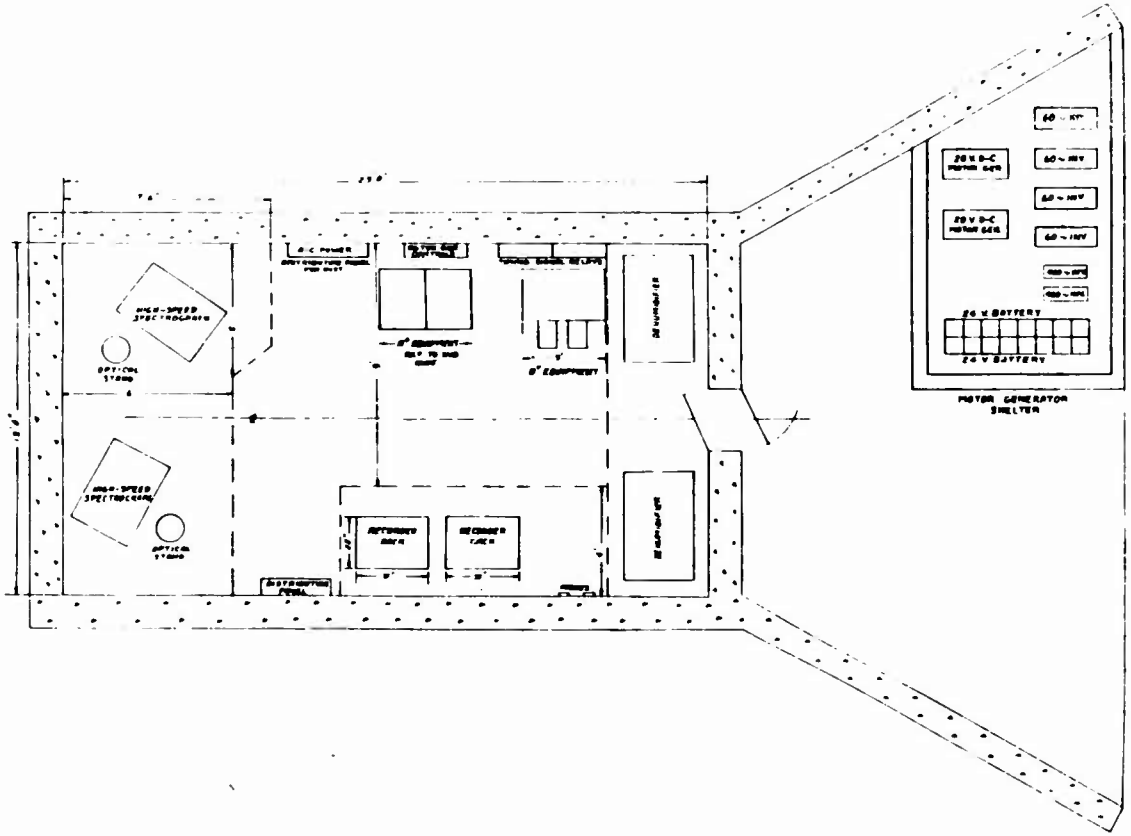

Fig. 7—Arrangement of equipment in station 6b at Site C.

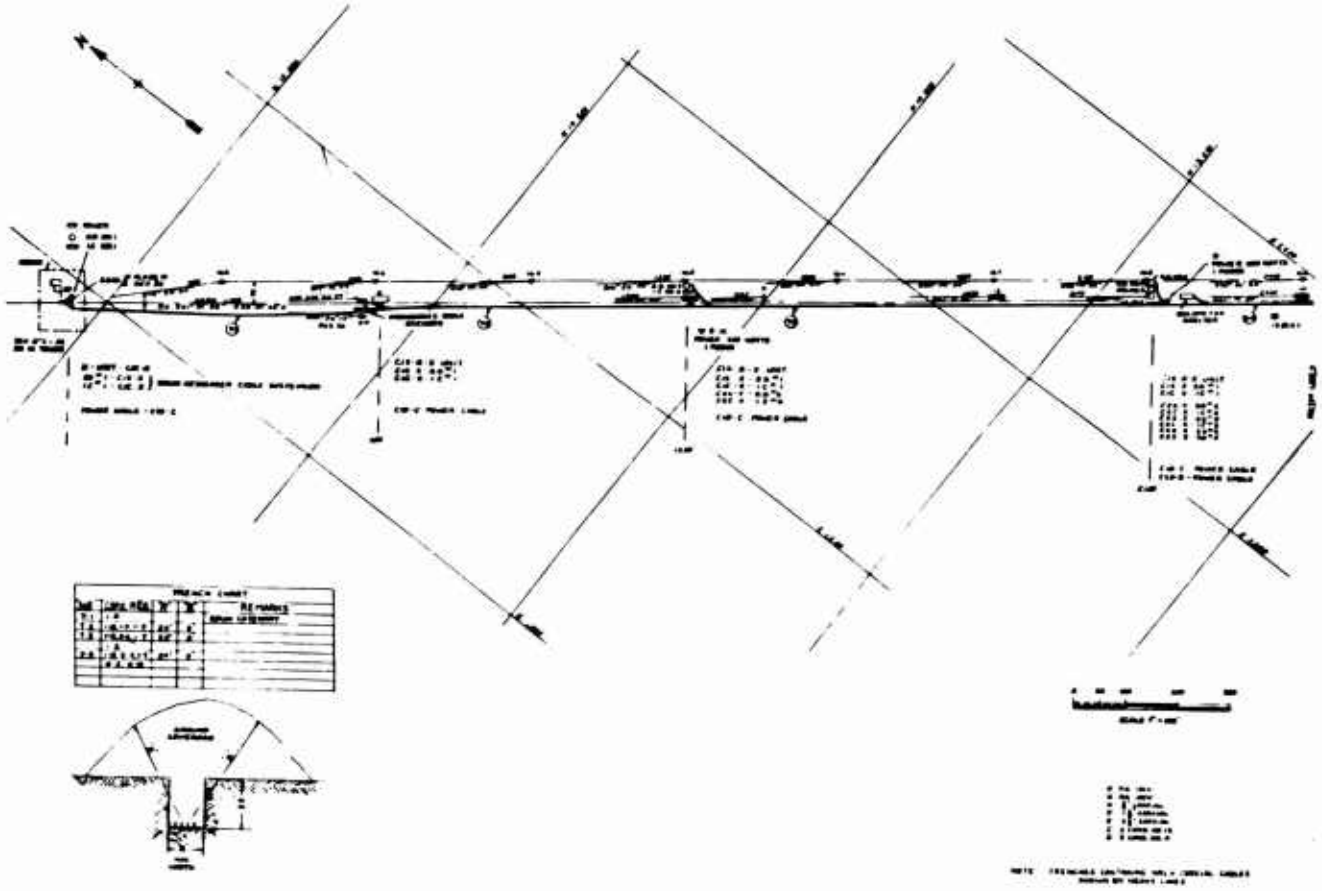

Fig. 8—Layout of cables and external equipment at Site C: Part 1.

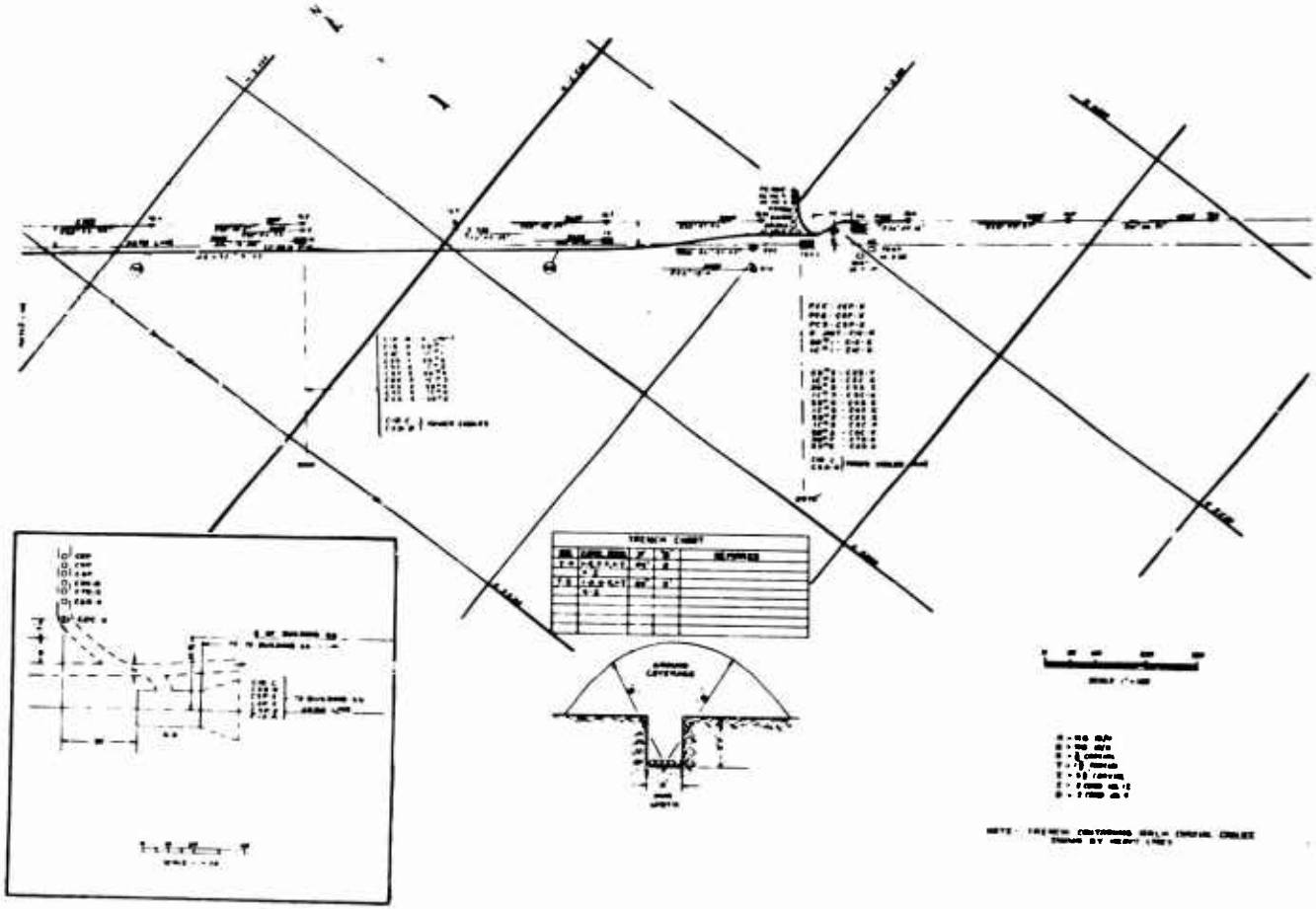

Fig. 9—Layout of cables and external equipment at Site C: Part 2.

TABLE 1

Cables at Site C

Cable No.	Type	Length[a] (ft)	Terminal Connectors	Equipment
1X1	RG-18/U	4,200	UG-154/U	Transit time
1X2	RG-63/U	35	UG-59A/U	Transit time
1X3	RG-63/U	35	UG-59A/U	Transit time
1X2T	RG-63/U	175	UG-59A/U	Transit time
1X3T	RG-63/U	175	UG-59A/U	Transit time
1S1	7/8-in. coaxial	625	Flange	Scintillation detector 1S
1S2	3 1/8-in. coaxial	3,287	Flange	Scintillation detector 1S
1S3	7/8-in. coaxial	175	Flange	Scintillation detector 1S
1S4	RG-17/U	50	UG-154/U	Scintillation detector 1S
1S5	RG-8/U	20	UG-59A/U	Scintillation detector 1S
1S6	RG-8/U	20	UG-59A/U	Scintillation detector 1S
1SD1	RG-63/U	35	UG-59A/U	Scintillation detector 1S
1SD2	RG-63/U	35	UG-59A/U	Scintillation detector 1S
1ST	RG-63/U	35	UG-59A/U	Scintillation detector 1S
2S1	7/8-in. coaxial	30	Flange	Scintillation detector 2S
2S2	1 5/8-in. coaxial	2,647	Flange	Scintillation detector 2S
2S3	7/8-in. coaxial	96	Flange	Scintillation detector 2S
2S4	RG-17/U	50	UG-154/U	Scintillation detector 2S
2S5	RG-8/U	20	UG-59A/U	Scintillation detector 2S
2S6	RG-8/U	20	UG-59A/U	Scintillation detector 2S
2SD1	RG-63/U	35	UG-59A/U	Scintillation detector 2S
2SD2	RG-63/U	35	UG-59A/U	Scintillation detector 2S
2ST	RG-63/U	35	UG-59A/U	Scintillation detector 2S
2S3D1	RG-63/U	35	UG-59A/U	XY timer 2S3
2S3D2	RG-63/U	35	UG-59A/U	XY timer 2S3
2S3D3	RG-63/U	35	UG-59A/U	XY timer 2S3
2S3D4	RG-63/U	35	UG-59A/U	XY timer 2S3
2S3T	RG-63/U	5	UG-59A/U	XY timer 2S3
3S1	7/8-in. coaxial	30	Flange	Scintillation detector 3S
3S2	3 1/8-in. coaxial	1,750	Flange	Scintillation detector 3S
3S3	7/8-in. coaxial	113	Flange	Scintillation detector 3S
3S4	RG-17/U	50	UG-154/U	Scintillation detector 3S
3S5	RG-8/U	20	UG-59A/U	Scintillation detector 3S
3S6	RG-8/U	20	UG-59A/U	Scintillation detector 3S

[a] Nominal only; actual physical lengths depended on field contingencies.

TABLE 1 (Continued)

Cable No.	Type	Length[a] (ft)	Terminal Connectors	Equipment
3SD1	RG-63/U	35	UG-59A/U	Scintillation detector 3S
3SD2	RG-63/U	35	UG-59A/U	Scintillation detector 3S
3ST	RG-63/U	35	UG-59A/U	Scintillation detector 3S
3S4D1	RG-63/U	35	UG-59A/U	XY timer 3S4
3S4D2	RG-63/U	35	UG-59A/U	XY timer 3S4
3S4D3	RG-63/U	35	UG-59A/U	XY timer 3S4
3S4D4	RG-63/U	35	UG-59A/U	XY timer 3S4
3S4T	RG-63/U	5	UG-59A/U	XY timer 3S4
4S1	7/8-in. coaxial	30	Flange	Scintillation detector 4S
4S2	3 1/8-in. coaxial	1,765	Flange	Scintillation detector 4S
4S3	7/8-in. coaxial	108	Flange	Scintillation detector 4S
4S4	RG-17/U	50	UG-154/U	Scintillation detector 4S
4S5	RG-8/U	20	UG-59A/U	Scintillation detector 4S
4S6	RG-8/U	20	UG-59A/U	Scintillation detector 4S
4SD1	RG-63/U	35	UG-59A/U	Scintillation detector 4S
4SD2	RG-63/U	35	UG-59A/U	Scintillation detector 4S
4ST	RG-63/U	35	UG-59A/U	Scintillation detector 4S
4S5D1	RG-63/U	35	UG-59A/U	XY timer 4S5
4S5D2	RG-63/U	35	UG-59A/U	XY timer 4S5
4S5D3	RG-63/U	35	UG-59A/U	XY timer 4S5
4S5D4	RG-63/U	35	UG-59A/U	XY timer 4S5
4S5T	RG-63/U	5	UG-59A/U	XY timer 4S5
5S1	7/8-in. coaxial	30	Flange	Scintillation detector 5S
5S2	3 1/8-in. coaxial	1,775	Flange	Scintillation detector 5S
5S3	7/8-in. coaxial	105	Flange	Scintillation detector 5S
5S4	RG-17/U	50	UG-154/U	Scintillation detector 5S
5S5	RG-8/U	20	UG-59A/U	Scintillation detector 5S
5S6	RG-8/U	20	UG-59A/U	Scintillation detector 5S
5SD1	RG-63/U	35	UG-59A/U	Scintillation detector 5S
5SD2	RG-63/U	35	UG-59A/U	Scintillation detector 5S
5ST	RG-63/U	35	UG-59A/U	Scintillation detector 5S
5S6D1	RG-63/U	35	UG-59A/U	XY timer 5S6
5S6D2	RG-63/U	35	UG-59A/U	XY timer 5S6
5S6D3	RG-63/U	35	UG-59A/U	XY timer 5S6
5S6D4	RG-63/U	35	UG-59A/U	XY timer 5S6
5S6T	RG-63/U	5	UG-59A/U	XY timer 5S6

TABLE 1 (Continued)

Cable No.	Type	Length[a] (ft)	Terminal Connectors	Equipment
6S2	7/8-in. coaxial	72	Flange	Scintillation detector 6S
6S3	7/8-in. coaxial	22	Flange	Scintillation detector 6S
6S4	RG-17/U	50	UG-154/U	Scintillation detector 6S
6S5	RG-8/U	20	UG-59A/U	Scintillation detector 6S
6S6	RG-8/U	20	UG-59A/U	Scintillation detector 6S
6SD1	RG-63/U	35	UG-59A/U	Scintillation detector 6S
6SD2	RG-63/U	35	UG-59A/U	Scintillation detector 6S
6ST	RG-63/U	35	UG-59A/U	Scintillation detector 6S
6S7D1	RG-63/U	35	UG-59A/U	XY timer 6S7
6S7D2	RG-63/U	35	UG-59A/U	XY timer 6S7
6S7D3	RG-63/U	35	UG-59A/U	XY timer 6S7
6S7D4	RG-63/U	35	UG-59A/U	XY timer 6S7
6S7T	RG-63/U	5	UG-59A/U	XY timer 6S7
7S2	7/8-in. coaxial	72	Flange	Scintillation detector 7S
7S3	7/8-in. coaxial	27	Flange	Scintillation detector 7S
7S4	RG-17/U	50	UG-154/U	Scintillation detector 7S
7S5	RG-8/U	20	UG-59A/U	Scintillation detector 7S
7S6	RG-8/U	20	UG-59A/U	Scintillation detector 7S
7SD1	RG-63/U	35	UG-59A/U	Scintillation detector 7S
7SD2	RG-63/U	35	UG-59A/U	Scintillation detector 7S
7ST	RG-63/U	35	UG-59A/U	Scintillation detector 7S
7S8D1	RG-63/U	35	UG-59A/U	XY timer 7S8
7S8D2	RG-63/U	35	UG-59A/U	XY timer 7S8
7S8D3	RG-63/U	35	UG-59A/U	XY timer 7S8
7S8D4	RG-63/U	35	UG-59A/U	XY timer 7S8
7S8T	RG-63/U	5	UG-59A/U	XY timer 7S8
8S2	7/8-in. coaxial	103	Flange	Scintillation detector 8S
8S4	RG-17/U	50	UG-154/U	Scintillation detector 8S
8S5	RG-8/U	20	UG-59A/U	Scintillation detector 8S
8S6	RG-8/U	20	UG-59A/U	Scintillation detector 8S
8SD1	RG-63/U	35	UG-59A/U	Scintillation detector 8S
8SD2	RG-63/U	35	UG-59A/U	Scintillation detector 8S
8ST	RG-63/U	35	UG-59A/U	Scintillation detector 8S
1C1	7/8-in. coaxial	625	Flange	Ion chamber 1C
1C2	7/8-in. coaxial	3,500	Flange	Ion chamber 1C
1C4	RG-17/U	50	UG-154/U	Ion chamber 1C
1C5	RG-8/U	20	UG-59A/U	Ion chamber 1C
1C6	RG-8/U	20	UG-59A/U	Ion chamber 1C
1CD1	RG-63/U	35	UG-59A/U	Ion chamber 1C
1CD2	RG-63/U	35	UG-59A/U	Ion chamber 1C
1CT	RG-63/U	35	UG-59A/U	Ion chamber 1C

TABLE 1 (Continued)

Cable No.	Type	Length[a] (ft)	Terminal Connectors	Equipment
2C2	7/8-in. coaxial	2,800	Flange	Ion chamber 2C
2C3	7/8-in. coaxial	30	Flange	Ion chamber 2C
2C4	RG-17/U	50	UG-154/U	Ion chamber 2C
2C5	RG-8/U	20	UG-59A/U	Ion chamber 2C
2C6	RG-8/U	20	UG-59A/U	Ion chamber 2C
2CD1	RG-63/U	35	UG-59A/U	Ion chamber 2C
2CD2	RG-63/U	35	UG-59A/U	Ion chamber 2C
2CT	RG-63/U	35	UG-59A/U	Ion chamber 2C
2C3D1	RG-63/U	35	UG-59A/U	XY timer 2C3
2C3D2	RG-63/U	35	UG-59A/U	XY timer 2C3
2C3D3	RG-63/U	35	UG-59A/U	XY timer 2C3
2C3D4	RG-63/U	35	UG-59A/U	XY timer 2C3
2C3T	RG-63/U	5	UG-59A/U	XY timer 2C3
3C2	7/8-in. coaxial	1,900	Flange	Ion chamber 3C
3C3	7/8-in. coaxial	25	Flange	Ion chamber 3C
3C4	RG-17/U	50	UG-154/U	Ion chamber 3C
3C5	RG-8/U	20	UG-59A/U	Ion chamber 3C
3C6	RG-8/U	20	UG-59A/U	Ion chamber 3C
3CD1	RG-63/U	35	UG-59A/U	Ion chamber 3C
3CD2	RG-63/U	35	UG-59A/U	Ion chamber 3C
3CT	RG-63/U	35	UG-59A/U	Ion chamber 3C
3C4D1	RG-63/U	35	UG-59A/U	XY timer 3C4
3C4D2	RG-63/U	35	UG-59A/U	XY timer 3C4
3C4D3	RG-63/U	35	UG-59A/U	XY timer 3C4
3C4D4	RG-63/U	35	UG-59A/U	XY timer 3C4
3C4T	RG-63/U	5	UG-59A/U	XY timer 3C4
3C3SD1	RG-63/U	35	UG-59A/U	XY timer 3C3S
3C3SD2	RG-63/U	35	UG-59A/U	XY timer 3C3S
3C3SD3	RG-63/U	35	UG-59A/U	XY timer 3C3S
3C3SD4	RG-63/U	35	UG-59A/U	XY timer 3C3S
3C3ST	RG-63/U	5	UG-59A/U	XY timer 3C3S
4C2	7/8-in. coaxial	980	Flange	Ion chamber 4C
4C3	7/8-in. coaxial	24	Flange	Ion chamber 4C
4C4	RG-17/U	50	UG-154/U	Ion chamber 4C
4C5	RG-8/U	20	UG-59A/U	Ion chamber 4C
4C6	RG-8/U	20	UG-59A/U	Ion chamber 4C
4CD1	RG-63/U	35	UG-59A/U	Ion chamber 4C
4CD2	RG-63/U	35	UG-59A/U	Ion chamber 4C
4CT	RG-63/U	35	UG-59A/U	Ion chamber 4C

TABLE 1 (Continued)

Cable No.	Type	Length[a] (ft)	Terminal Connectors	Equipment
4C5D1	RG-63/U	35	UG-59A/U	XY timer 4C5
4C5D2	RG-63/U	35	UG-59A/U	XY timer 4C5
4C5D3	RG-63/U	35	UG-59A/U	XY timer 4C5
4C5D4	RG-63/U	35	UG-59A/U	XY timer 4C5
4C5T	RG-63/U	5	UG-59A/U	XY timer 4C5
5C2	7/8-in. coaxial	72	Flange	Ion chamber 5C
5C4	RG-17/U	50	UG-154/U	Ion chamber 5C
5C5	RG-8/U	20	UG-59A/U	Ion chamber 5C
5C6	RG-8/U	20	UG-59A/U	Ion chamber 5C
5CD1	RG-63/U	35	UG-59A/U	Ion chamber 5C
5CD2	RG-63/U	35	UG-59A/U	Ion chamber 5C
5CT	RG-63/U	35	UG-59A/U	Ion chamber 5C
3P1	7/8-in. coaxial	15	Flange	Prompt gamma 3P
3P2	7/8-in. coaxial	185	Flange	Prompt gamma 3P
3P3	RG-8/U	700	UG-59A/U	Prompt gamma 3P
3PT	RG-8/U	10	UG-59A/U	Prompt gamma 3P
4P1	7/8-in. coaxial	15	Flange	Prompt gamma 4P
4P2	7/8-in. coaxial	189	Flange	Prompt gamma 4P
4P3	RG-8/U	1,400	UG-59A/U	Prompt gamma 4P
4PT	RG-8/U	10	UG-59A/U	Prompt gamma 4P
5P1	7/8-in. coaxial	15	Flange	Prompt gamma 5P
5P2	7/8-in. coaxial	196	Flange	Prompt gamma 5P
5P3	RG-8/U	1,400	UG-59A/U	Prompt gamma 5P
5PT	RG-8/U	10	UG-59A/U	Prompt gamma 5P

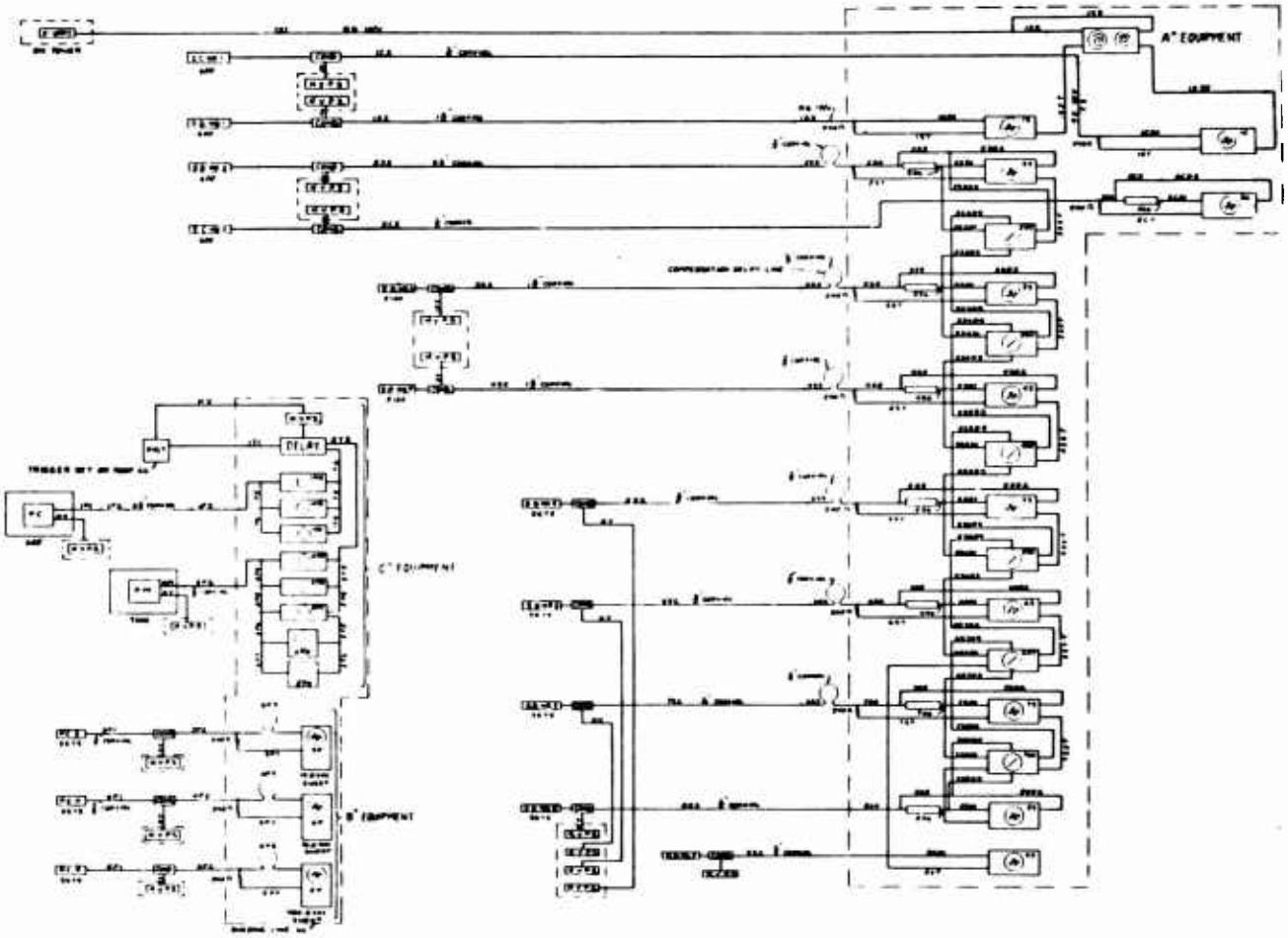

Fig. 10—General cable arrangement at Site E.

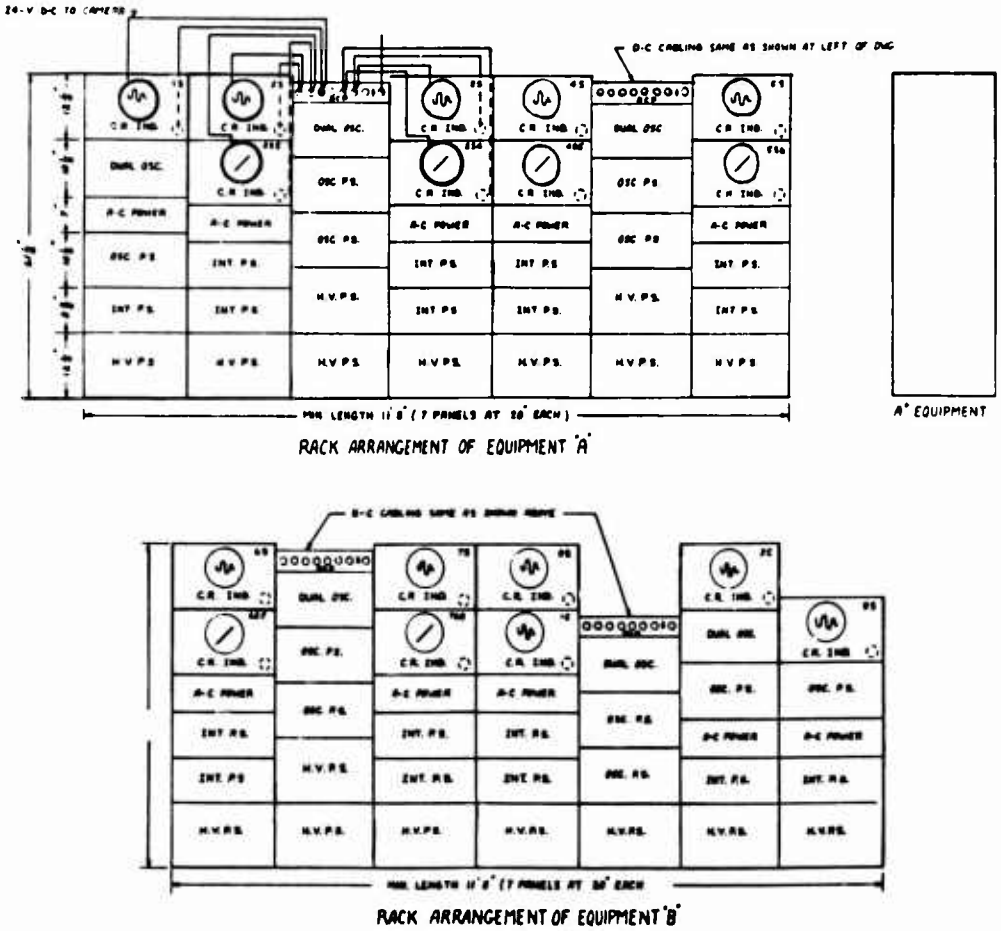

Fig. 11—Recording equipment in station 6a at Site E.

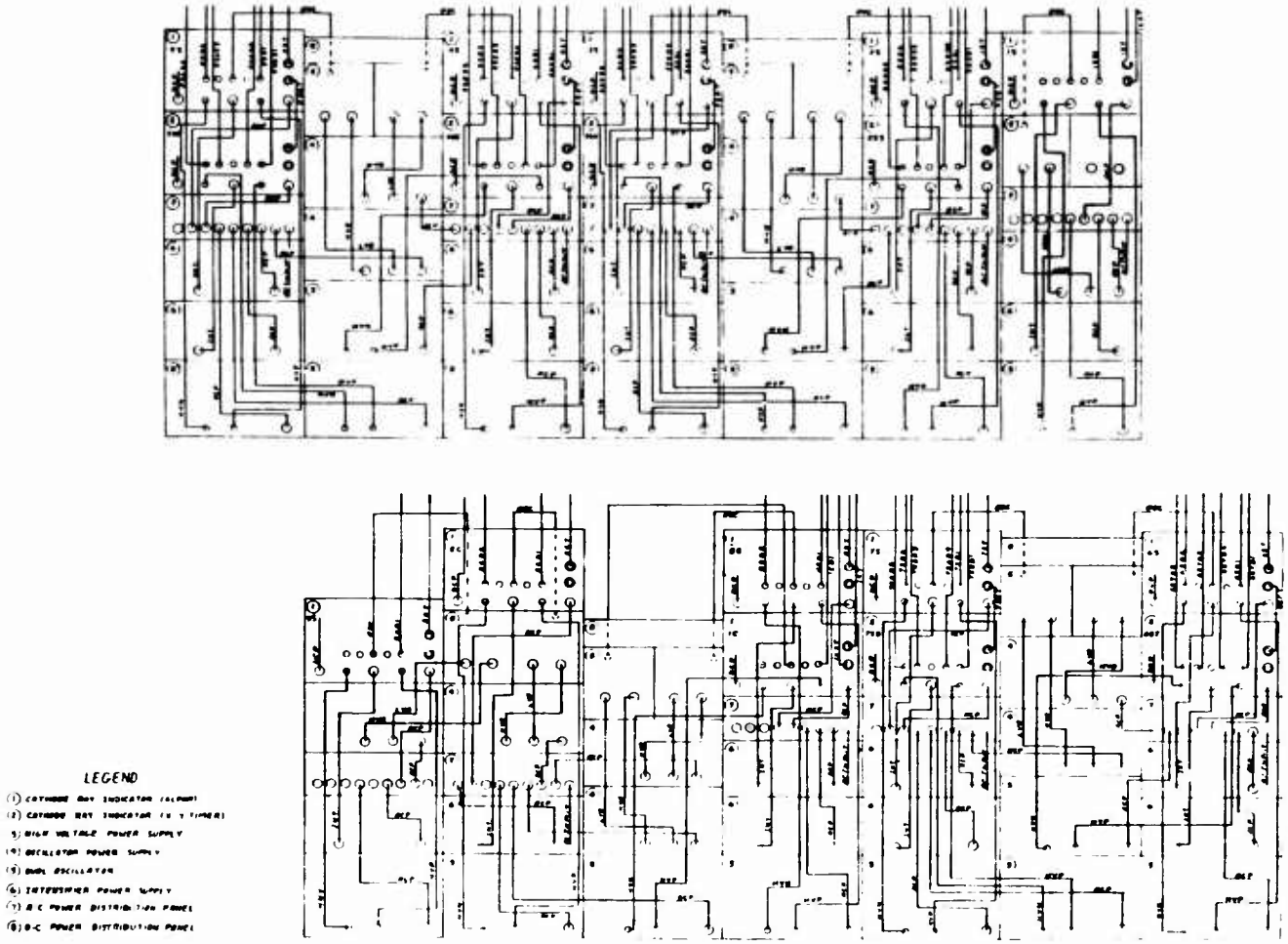

Fig. 12—Cable arrangement for alpha-recording equipment at Site E.

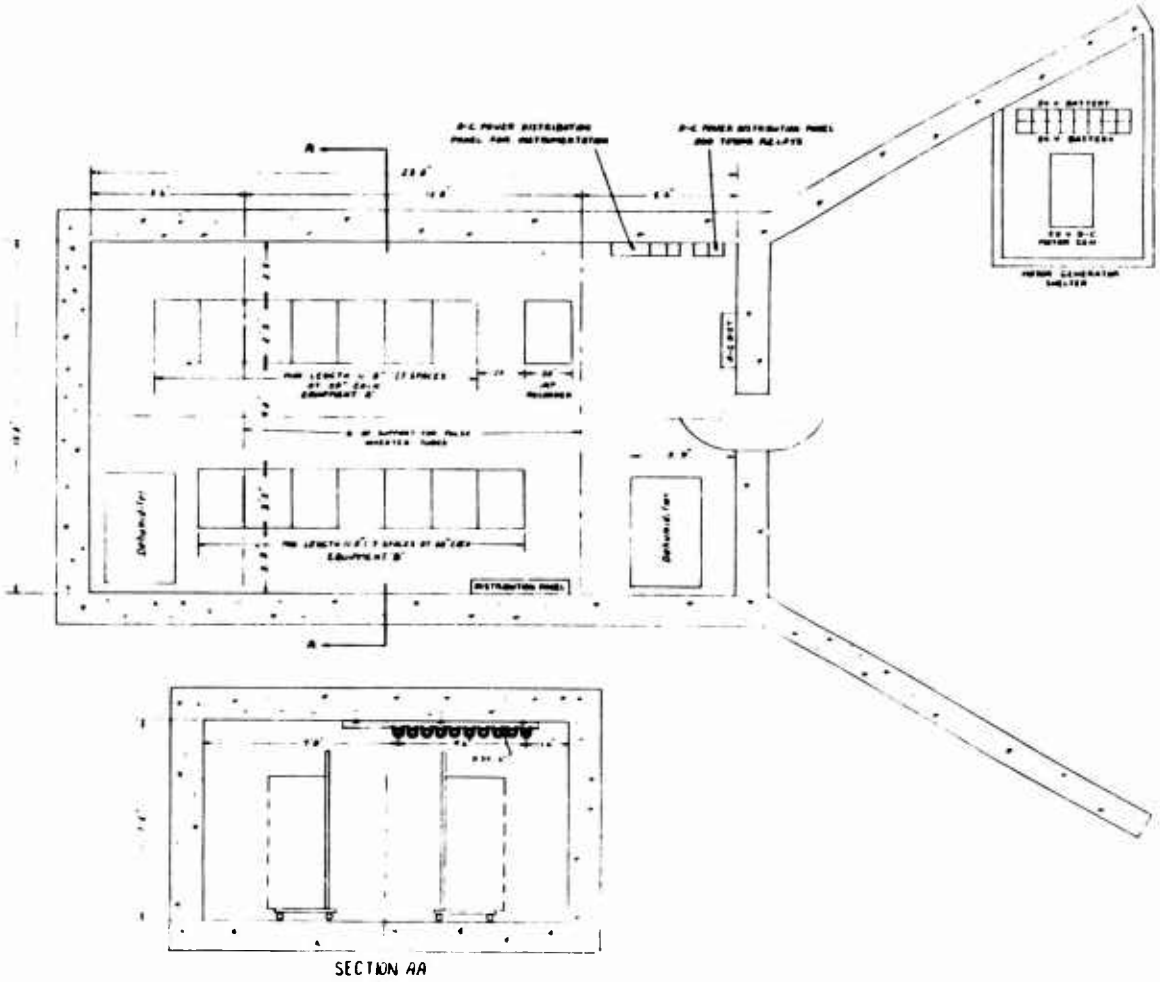

Fig. 13—Arrangement of equipment in station 6a at Site E.

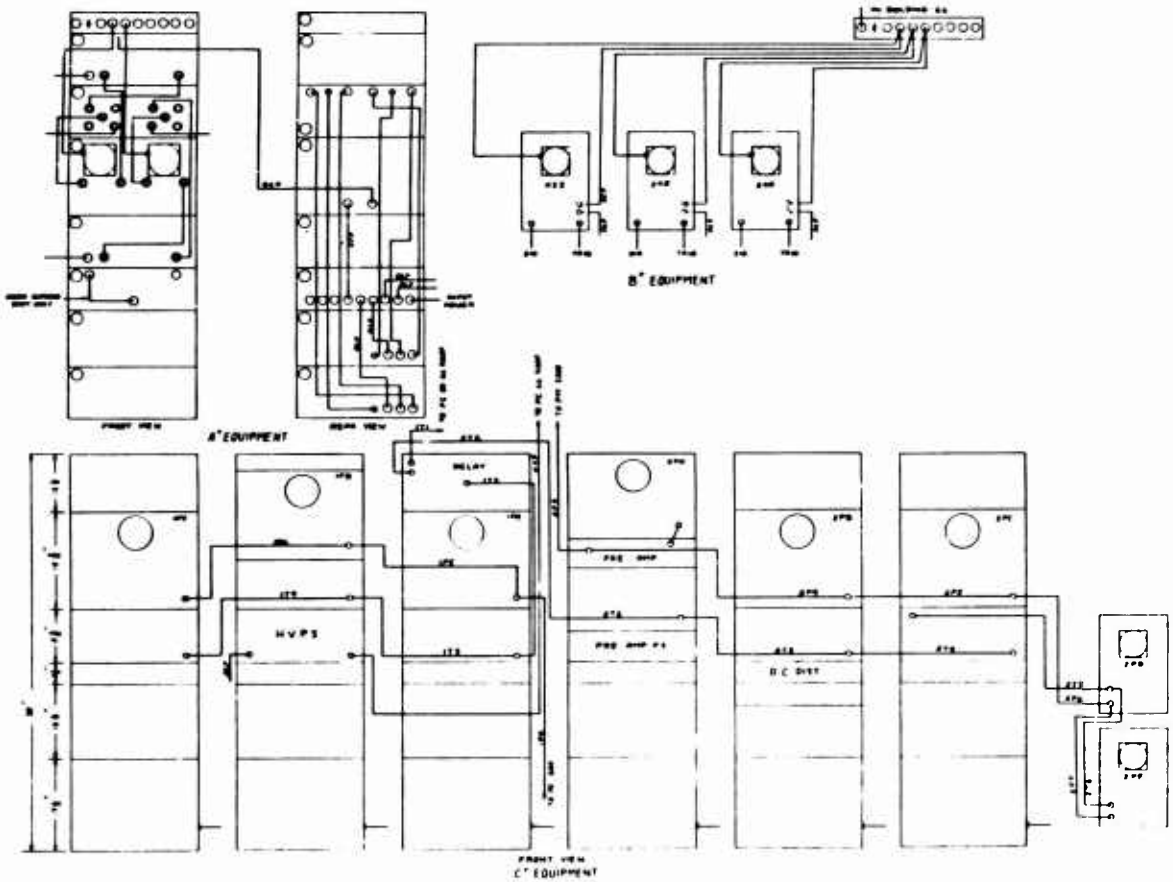

Fig. 14—Cable arrangement for transit-time, prompt-gamma, and tenex equipment at Sites E, V, and E+.

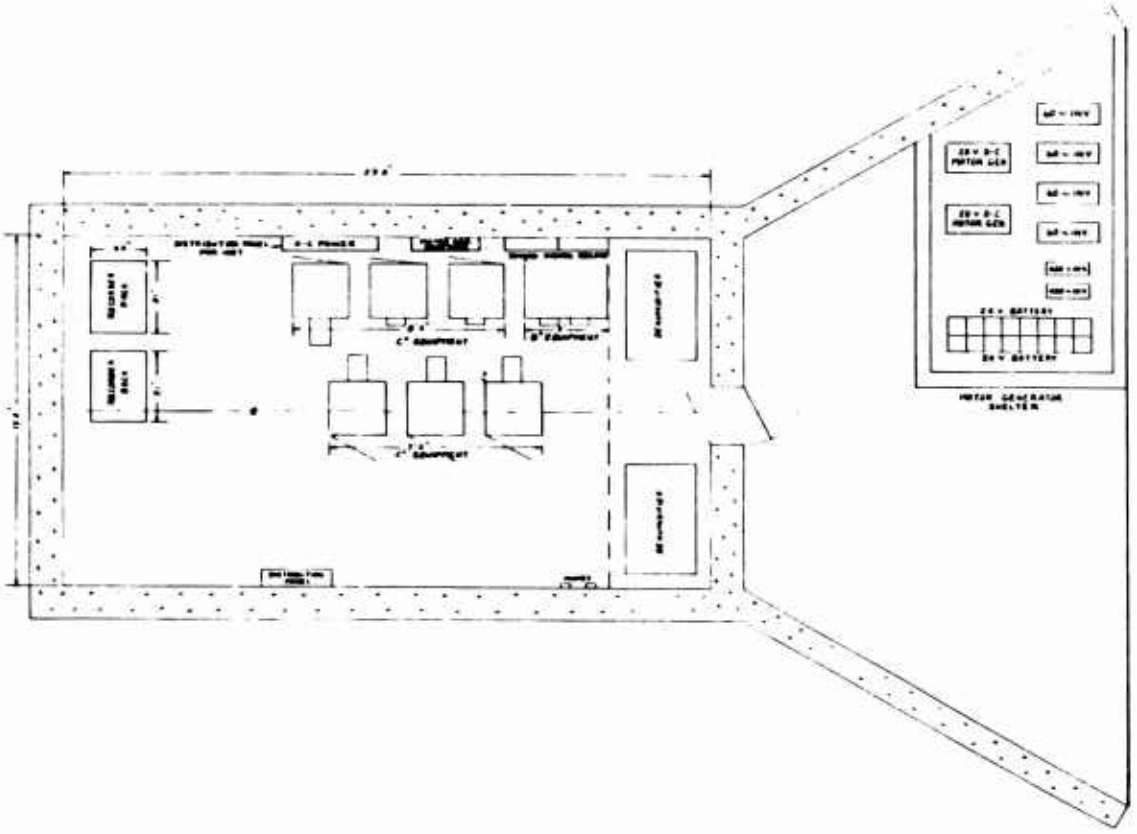

Fig. 15—Arrangement of equipment in station 6b at Sites E, V, and E+.

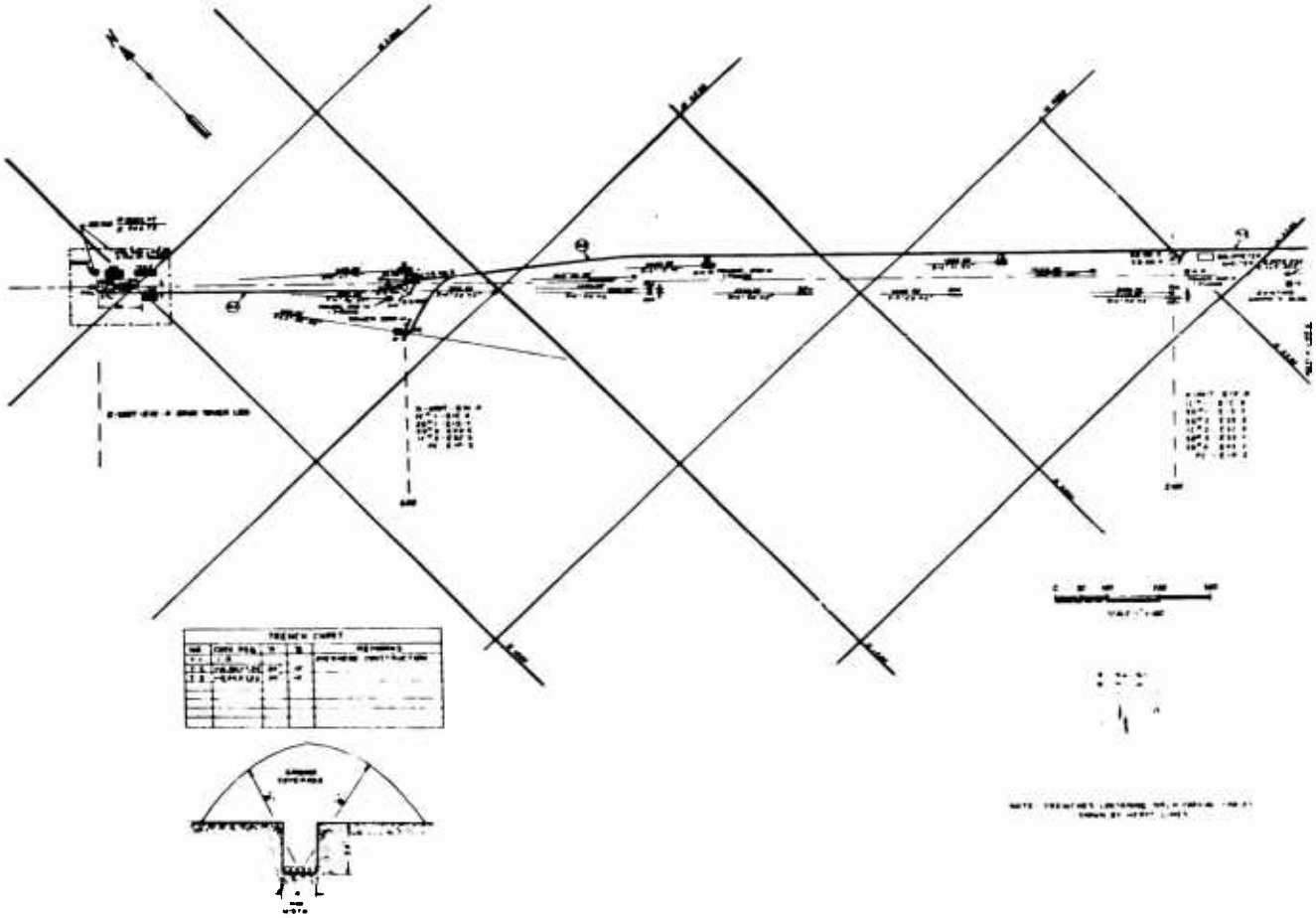

Fig. 16—Layout of cables and external equipment at Site E: Part 1.

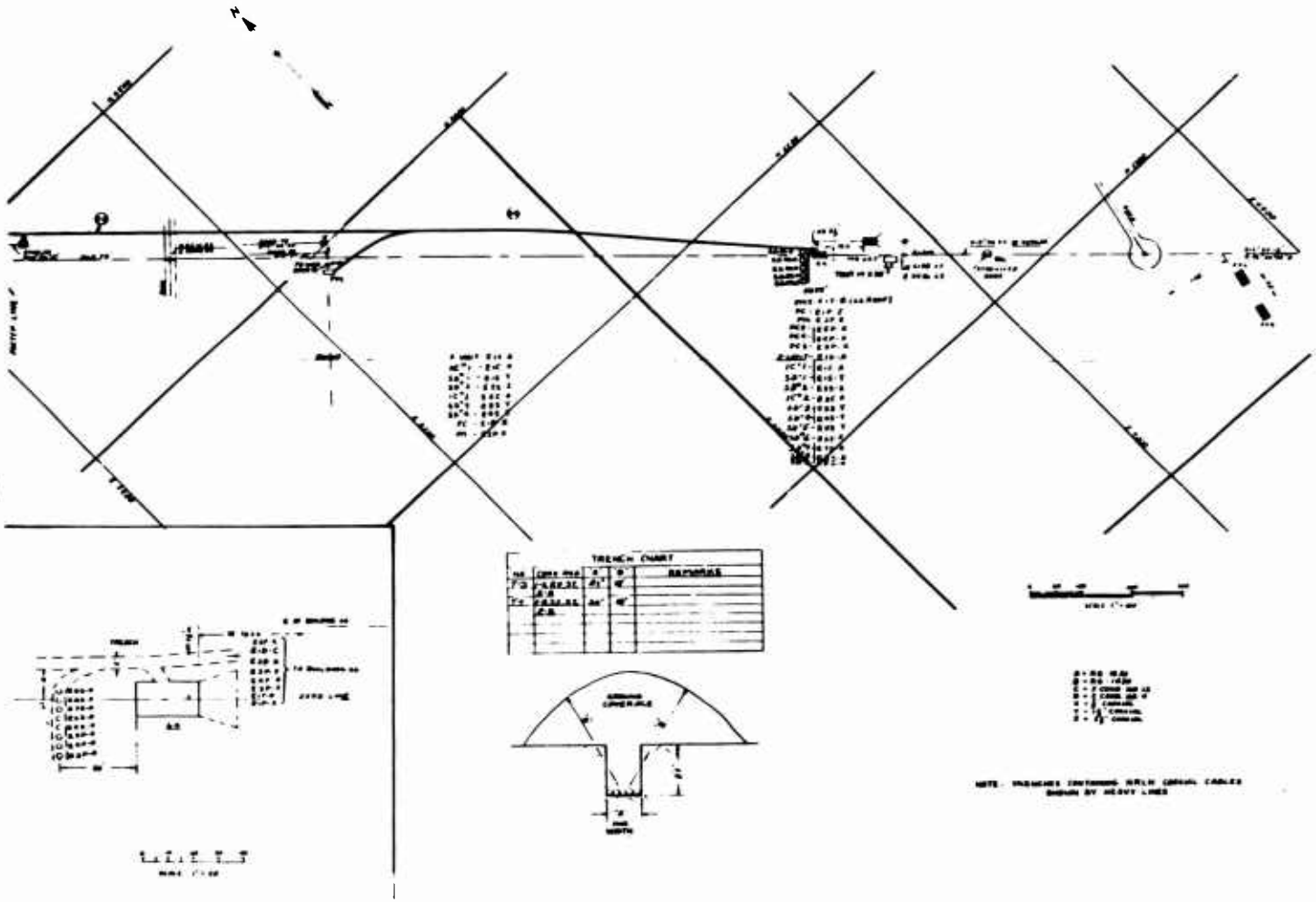

Fig. 17—Layout of cables and external equipment at Site E: Part 2.

TABLE 2

Cables at Site E

Cable No.	Type	Length[a] (ft)	Terminal Connectors	Equipment
1X1	RG-18/U	4,500	UG-154/U	Transit time
1X2	RG-63/U	35	UG-59A/U	Transit time
1X3	RG-63/U	35	UG-59A/U	Transit time
1X2T	RG-63/U	35	UG-59A/U	Transit time
1X3T	RG-63/U	35	UG-59A/U	Transit time
1S1	7/8-in. coaxial	47	Flange	Scintillation detector 1S
1S2	1 5/8-in. coaxial	3,410	Flange	Scintillation detector 1S
1S3	RG-18/U	107	UG-154/U	Scintillation detector 1S
1S4	RG-17/U	50	UG-154/U	Scintillation detector 1S
1SD2	RG-8/U	50	UG-59A/U	Scintillation detector 1S
1ST	RG-63/U	35	UG-59A/U	Scintillation detector 1S
2S1	7/8-in. coaxial	14	Flange	Scintillation detector 2S
2S2	3 1/8-in. coaxial	3,289	Flange	Scintillation detector 2S
2S3	7/8-in. coaxial	28	Flange	Scintillation detector 2S
2S4	RG-17/U	50	UG-154/U	Scintillation detector 2S
2S5	RG-8/U	20	UG-59A/U	Scintillation detector 2S
2S6	RG-8/U	20	UG-59A/U	Scintillation detector 2S
2SD1	RG-63/U	35	UG-59A/U	Scintillation detector 2S
2SD2	RG-63/U	35	UG-59A/U	Scintillation detector 2S
2ST	RG-63/U	35	UG-59A/U	Scintillation detector 2S
2S3D1	RG-63/U	35	UG-59A/U	XY timer 2S3
2S3D2	RG-63/U	35	UG-59A/U	XY timer 2S3
2S3D3	RG-63/U	35	UG-59A/U	XY timer 2S3
2S3D4	RG-63/U	35	UG-59A/U	XY timer 2S3
2S3T	RG-63/U	5	UG-59A/U	XY timer 2S3
3S1	7/8-in. coaxial	33	Flange	Scintillation detector 3S
3S2	1 5/8-in. coaxial	1,797	Flange	Scintillation detector 3S
3S3	7/8-in. coaxial	58	Flange	Scintillation detector 3S
3S4	RG-17/U	50	UG-154/U	Scintillation detector 3S
3S5	RG-8/U	20	UG-59A/U	Scintillation detector 3S
3S6	RG-8/U	20	UG-59A/U	Scintillation detector 3S
3SD1	RG-63/U	35	UG-59A/U	Scintillation detector 3S
3SD2	RG-63/U	35	UG-59A/U	Scintillation detector 3S
3ST	RG-63/U	35	UG-59A/U	Scintillation detector 3S

[a] Nominal only; actual physical lengths depended on field contingencies.

TABLE 2 (Continued)

Cable No.	Type	Length[a] (ft)	Terminal Connectors	Equipment
3S4D1	RG-63/U	35	UG-59A/U	XY timer 3S4
3S4D2	RG-63/U	35	UG-59A/U	XY timer 3S4
3S4D3	RG-63/U	35	UG-59A/U	XY timer 3S4
3S4D4	RG-63/U	35	UG-59A/U	XY timer 3S4
3S4T	RG-63/U	5	UG-59A/U	XY timer 3S4
4S1	7/8-in. coaxial	30	Flange	Scintillation detector 4S
4S2	1 5/8-in. coaxial	1,789	Flange	Scintillation detector 4S
4S3	7/8-in. coaxial	55	Flange	Scintillation detector 4S
4S4	RG-17/U	50	UG-154/U	Scintillation detector 4S
4S5	RG-8/U	20	UG-59A/U	Scintillation detector 4S
4S6	RG-8/U	20	UG-59A/U	Scintillation detector 4S
4SD1	RG-63/U	35	UG-59A/U	Scintillation detector 4S
4SD2	RG-63/U	35	UG-59A/U	Scintillation detector 4S
4ST	RG-63/U	35	UG-59A/U	Scintillation detector 4S
4S5D1	RG-63/U	35	UG-59A/U	XY timer 4S5
4S5D2	RG-63/U	35	UG-59A/U	XY timer 4S5
4S5D3	RG-63/U	35	UG-59A/U	XY timer 4S5
4S5D4	RG-63/U	35	UG-59A/U	XY timer 4S5
4S5T	RG-63/U	5	UG-59A/U	XY timer 4S5
5S2	7/8-in. coaxial	57	Flange	Scintillation detector 5S
5S3	7/8-in. coaxial	50	Flange	Scintillation detector 5S
5S4	RG-17/U	50	UG-154/U	Scintillation detector 5S
5S5	RG-8/U	20	UG-59A/U	Scintillation detector 5S
5S6	RG-8/U	20	UG-59A/U	Scintillation detector 5S
5SD1	RG-63/U	35	UG-59A/U	Scintillation detector 5S
5SD2	RG-63/U	35	UG-59A/U	Scintillation detector 5S
5ST	RG-63/U	35	UG-59A/U	Scintillation detector 5S
5S6D1	RG-63/U	35	UG-59A/U	XY timer 5S6
5S6D2	RG-63/U	35	UG-59A/U	XY timer 5S6
5S6D3	RG-63/U	35	UG-59A/U	XY timer 5S6
5S6D4	RG-63/U	35	UG-59A/U	XY timer 5S6
5S6T	RG-63/U	5	UG-59A/U	XY timer 5S6
6S2	7/8-in. coaxial	49	Flange	Scintillation detector 6S
6S3	7/8-in. coaxial	50	Flange	Scintillation detector 6S
6S4	RG-17/U	50	UG-154/U	Scintillation detector 6S
6S5	RG-8/U	20	UG-59A/U	Scintillation detector 6S
6S6	RG-8/U	20	UG-59A/U	Scintillation detector 6S
6SD1	RG-63/U	35	UG-59A/U	Scintillation detector 6S
6SD2	RG-63/U	35	UG-59A/U	Scintillation detector 6S
6ST	RG-63/U	35	UG-59A/U	Scintillation detector 6S

TABLE 2 (Continued)

Cable No.	Type	Length[a] (ft)	Terminal Connectors	Equipment
6S7D1	RG-63/U	35	UG-59A/U	XY timer 6S7
6S7D2	RG-63/U	35	UG-59A/U	XY timer 6S7
6S7D3	RG-63/U	35	UG-59A/U	XY timer 6S7
6S7D4	RG-63/U	35	UG-59A/U	XY timer 6S7
6S7T	RG-63/U	5	UG-59A/U	XY timer 6S7
7S2	7/8-in. coaxial	41	Flange	Scintillation detector 7S
7S3	7/8-in. coaxial	50	Flange	Scintillation detector 7S
7S4	RG-17/U	50	UG-154/U	Scintillation detector 7S
7S5	RG-8/U	20	UG-59A/U	Scintillation detector 7S
7S6	RG-8/U	20	UG-59A/U	Scintillation detector 7S
7SD1	RG-63/U	35	UG-59A/U	Scintillation detector 7S
7SD2	RG-63/U	35	UG-59A/U	Scintillation detector 7S
7ST	RG-63/U	35	UG-59A/U	Scintillation detector 7S
7S8D1	RG-63/U	35	UG-59A/U	XY timer 7S8
7S8D2	RG-63/U	35	UG-59A/U	XY timer 7S8
7S8D3	RG-63/U	35	UG-59A/U	XY timer 7S8
7S8D4	RG-63/U	35	UG-59A/U	XY timer 7S8
7S8T	RG-63/U	5	UG-59A/U	XY timer 7S8
8S2	7/8-in. coaxial	84	Flange	Scintillation detector 8S
8S4	RG-17/U	50	UG-154/U	Scintillation detector 8S
8S5	RG-8/U	20	UG-59A/U	Scintillation detector 8S
8S6	RG-8/U	20	UG-59A/U	Scintillation detector 8S
8SD1	RG-63/U	35	UG-59A/U	Scintillation detector 8S
8SD2	RG-63/U	35	UG-59A/U	Scintillation detector 8S
8ST	RG-63/U	5	UG-59A/U	Scintillation detector 8S
9S2	7/8-in. coaxial	46	Flange	Scintillation detector 9S
9S4	RG-17/U	50	UG-154/U	Scintillation detector 9S
9SD2	RG-8/U	50	UG-59A/U	Scintillation detector 9S
9ST	RG-63/U	5	UG-59A/U	Scintillation detector 9S
1C2	7/8-in. coaxial	3,460	Flange	Ion chamber 1C
1C3	RG-18/U	107	UG-154/U	Ion chamber 1C
1C4	RG-17/U	50	UG-154/U	Ion chamber 1C
1CD2	RG-8/U	50	UG-59A/U	Ion chamber 1C
1CT	RG-63/U	35	UG-59A/U	Ion chamber 1C

TABLE 2 (Continued)

Cable No.	Type	Length[a] (ft)	Terminal Connectors	Equipment
2C2	7/8-in. coaxial	3,430	Flange	Ion chamber 2C
2C4	RG-17/U	50	UG-154/U	Ion chamber 2C
2C5	RG-8/U	20	UG-59A/U	Ion chamber 2C
2C6	RG-8/U	20	UG-59A/U	Ion chamber 2C
2CD1	RG-63/U	35	UG-59A/U	Ion chamber 2C
2CD2	RG-63/U	35	UG-59A/U	Ion chamber 2C
2CT	RG-63/U	35	UG-59A/U	Ion chamber 2C
3P1	7/8-in. coaxial	15	Flange	Prompt gamma 3P
3P2	7/8-in. coaxial	176	Flange	Prompt gamma 3P
3P3	RG-8/U	1,400	UG-59A/U	Prompt gamma 3P
3PT	RG-8/U	10	UG-59A/U	Prompt gamma 3P
4P1	7/8-in. coaxial	15	Flange	Prompt gamma 4P
4P2	7/8-in. coaxial	171	Flange	Prompt gamma 4P
4P3	RG-8/U	700	UG-59A/U	Prompt gamma 4P
4PT	RG-8/U	10	UG-59A/U	Prompt gamma 4P
5P1	7/8-in. coaxial	15	Flange	Prompt gamma 5P
5P2	7/8-in. coaxial	165	Flange	Prompt gamma 5P
5P3	RG-8/U	1,500	UG-59A/U	Prompt gamma 5P
5PT	RG-8/U	10	UG-59A/U	Prompt gamma 5P

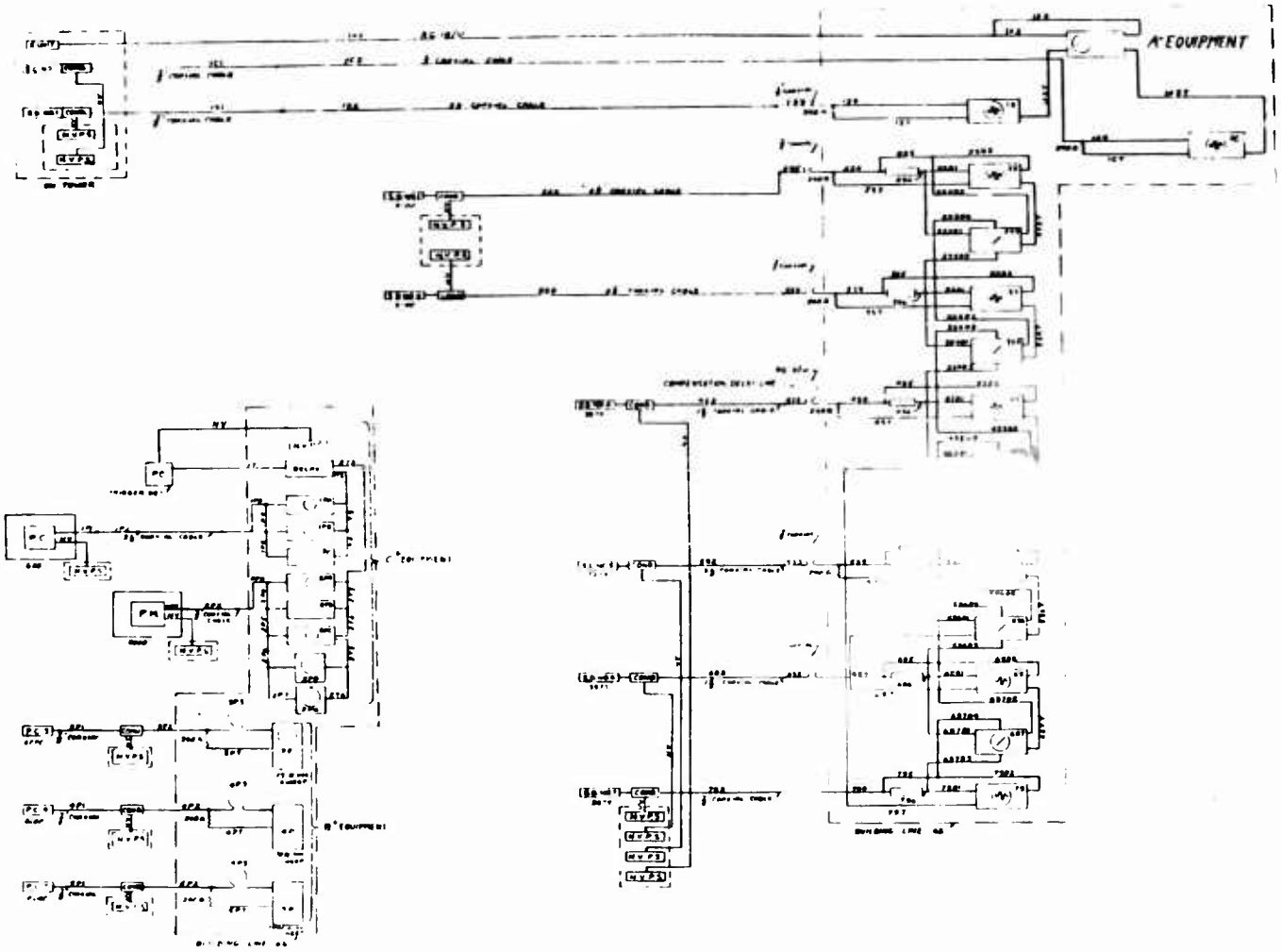

Fig. 18—General cable arrangement at Site V.

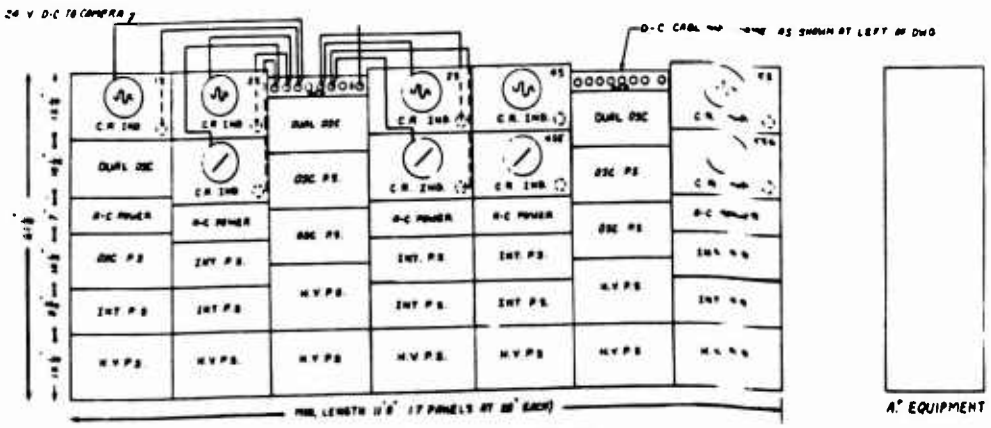

RACK ARRANGEMENT OF EQUIPMENT "A"

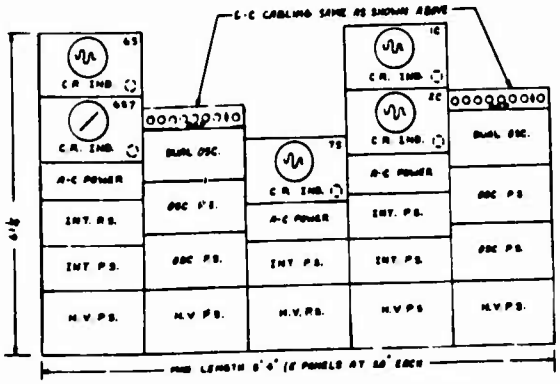

RACK ARRANGEMENT OF EQUIPMENT "B"

NOTE: EC EQUIPMENT NOT USED DUE TO OPEN CENTER CONDUCTOR IN COAXIAL SIGNAL CABLE ON CAUSEWAY, DISCOVERED AT 1900, 6-8 DAYS.

Fig. 19—Recording equipment in station 6a at Site V: Front view.

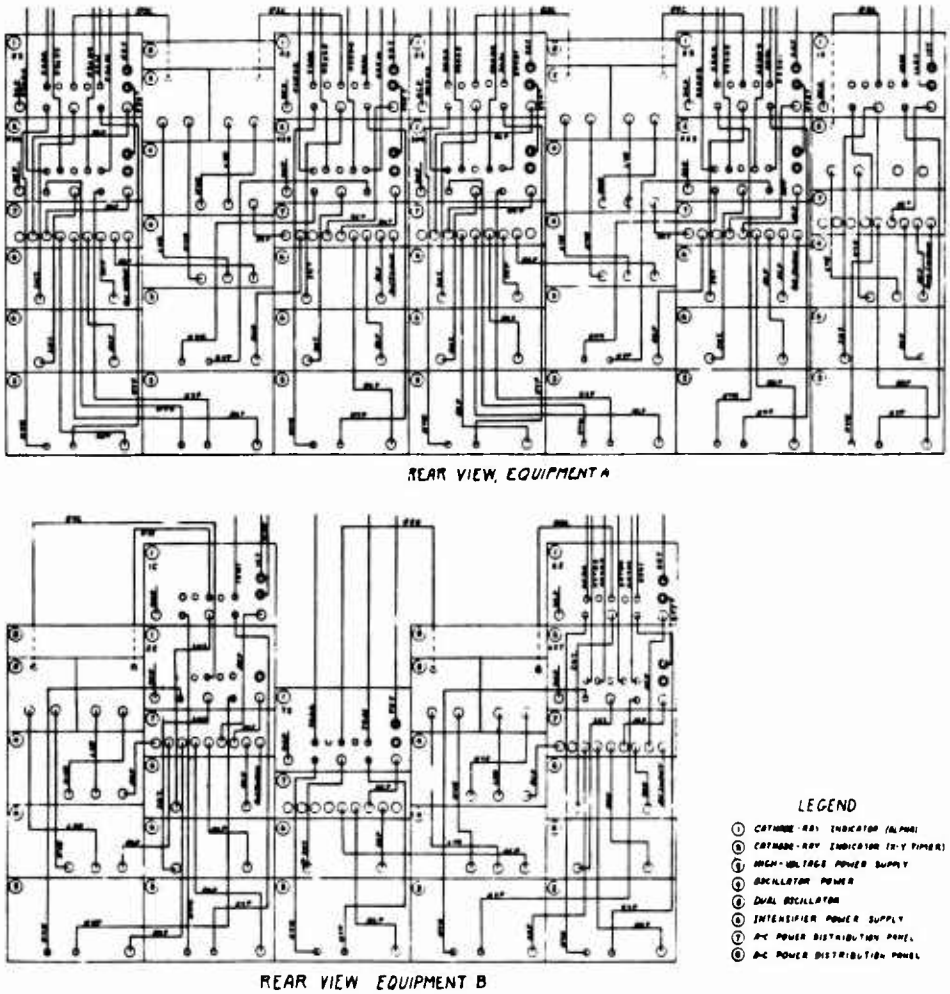

Fig. 20—Cable arrangement for alpha-recording equipment at Site V.

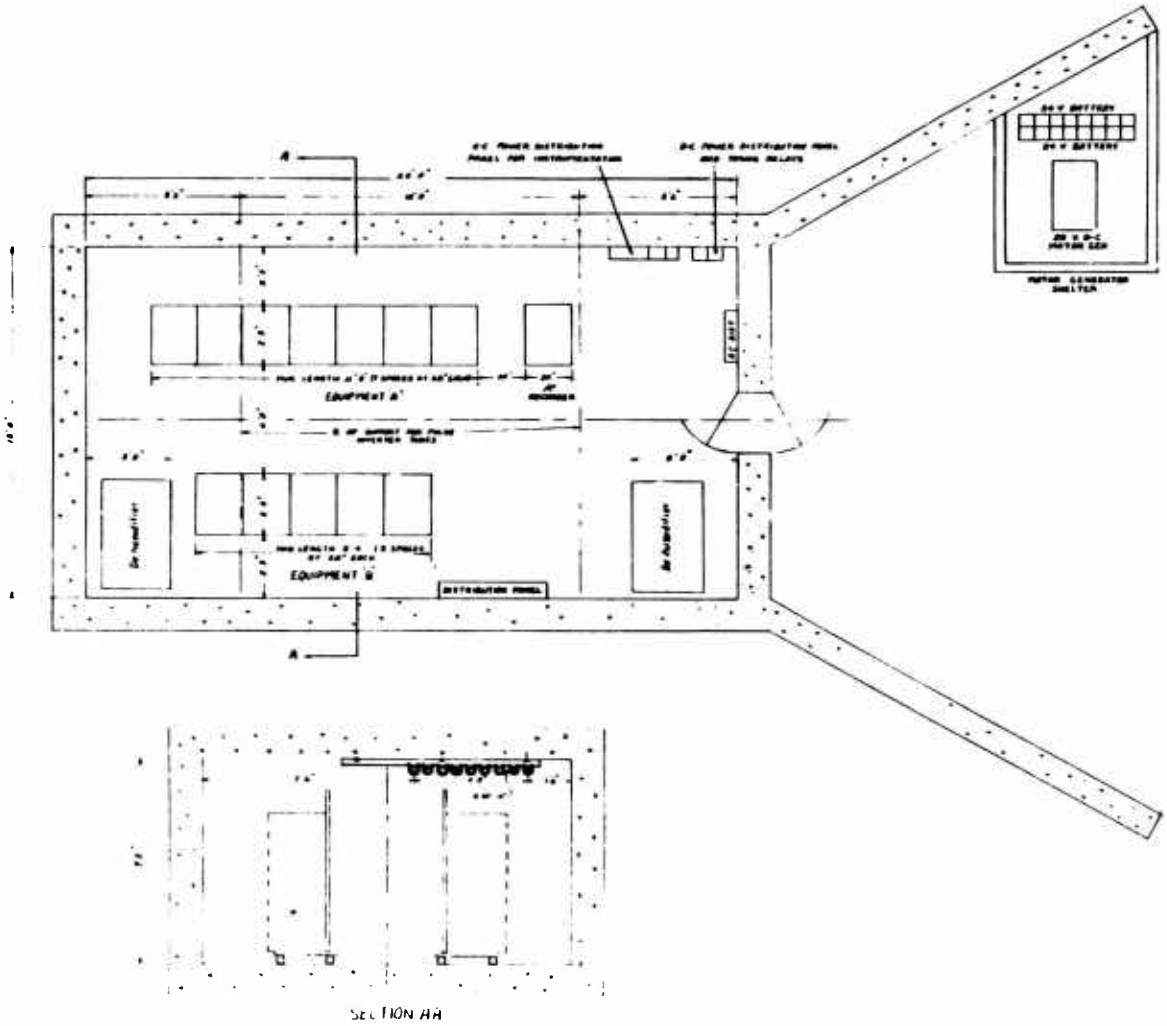

Fig. 21—Arrangement of equipment in station 6a at Site V.

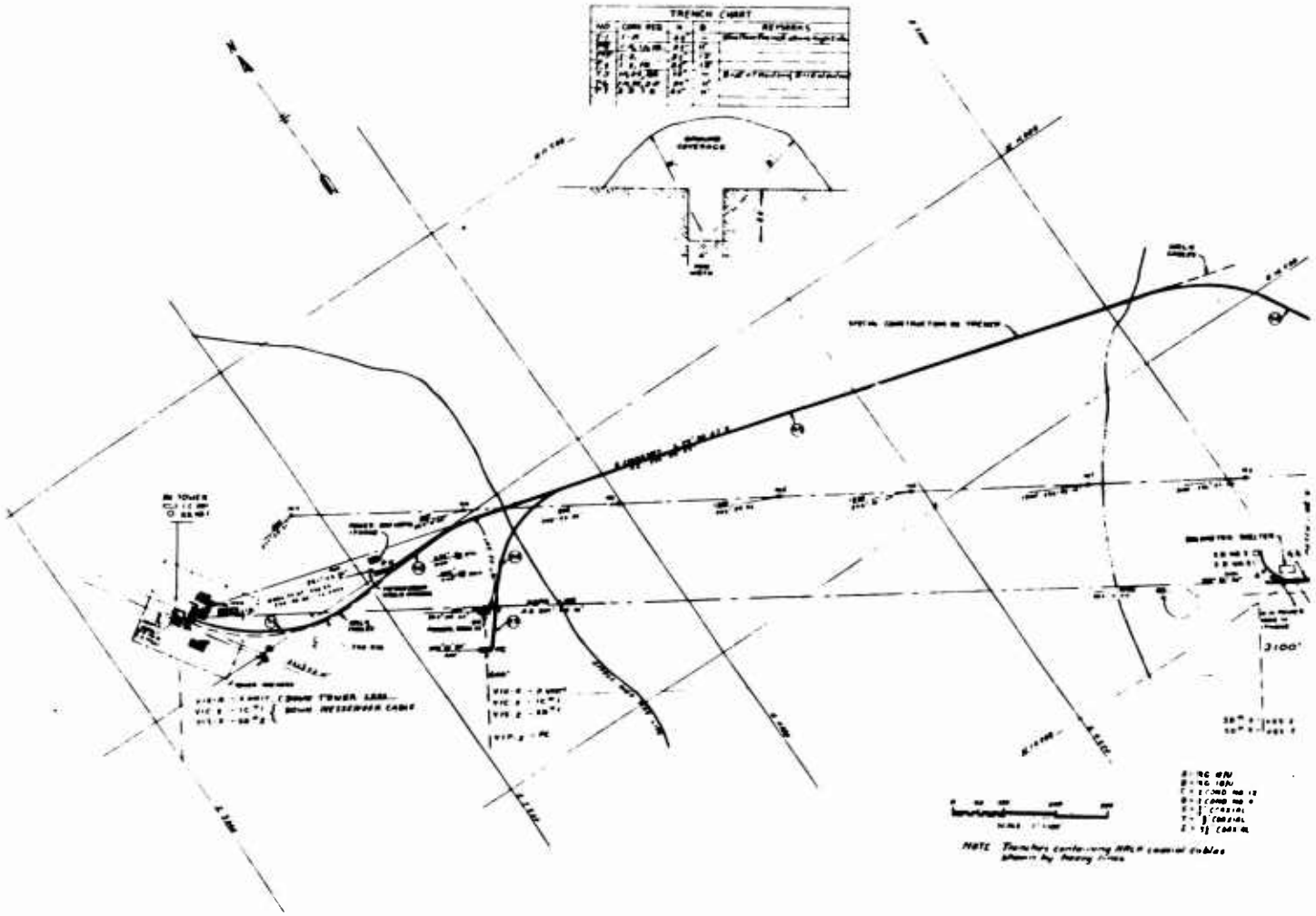

Fig. 22—Layout of cables and external equipment at Site V: Part 1.

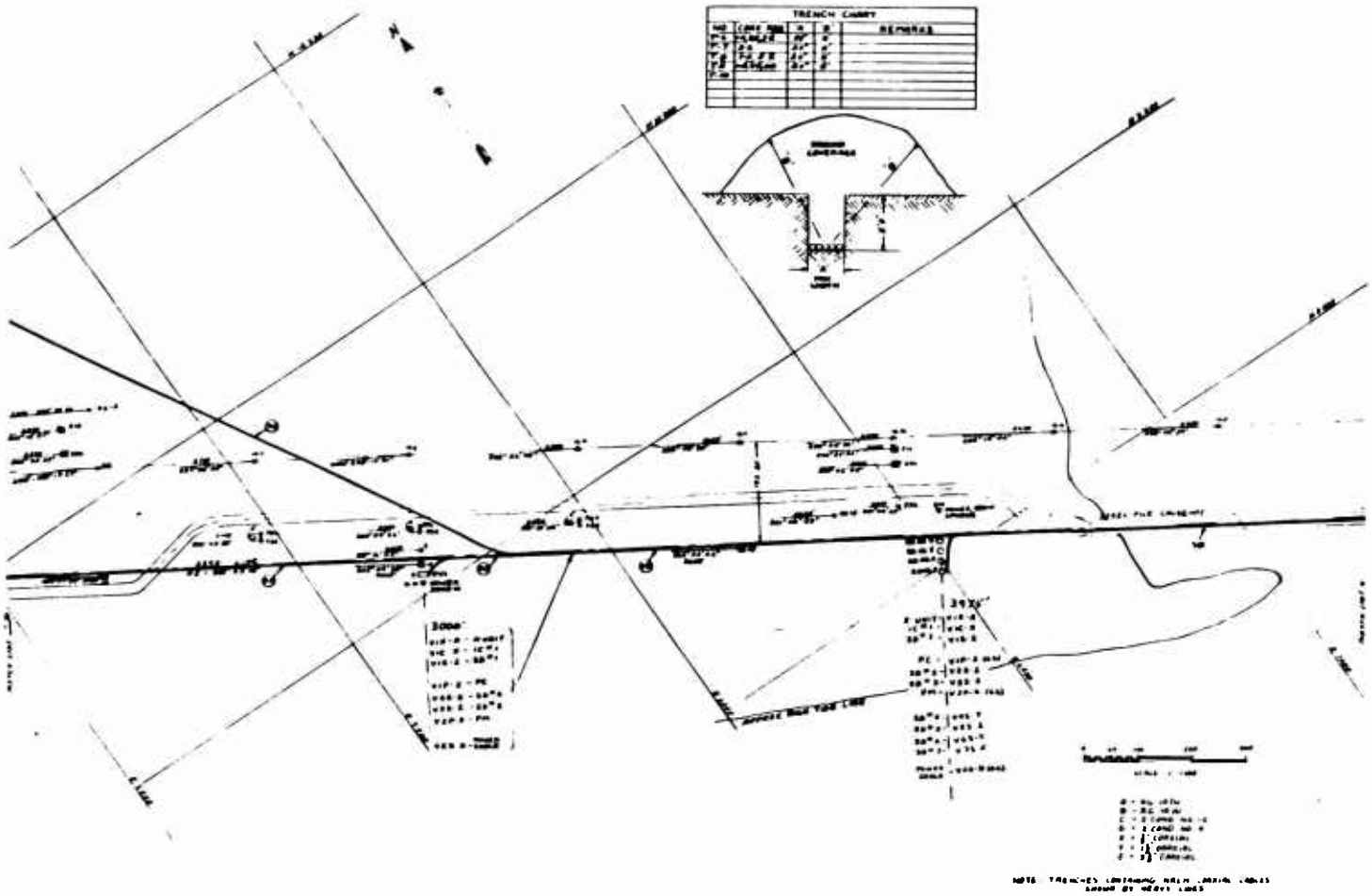

Fig. 23—Layout of cables and external equipment at Site V: Part 2.

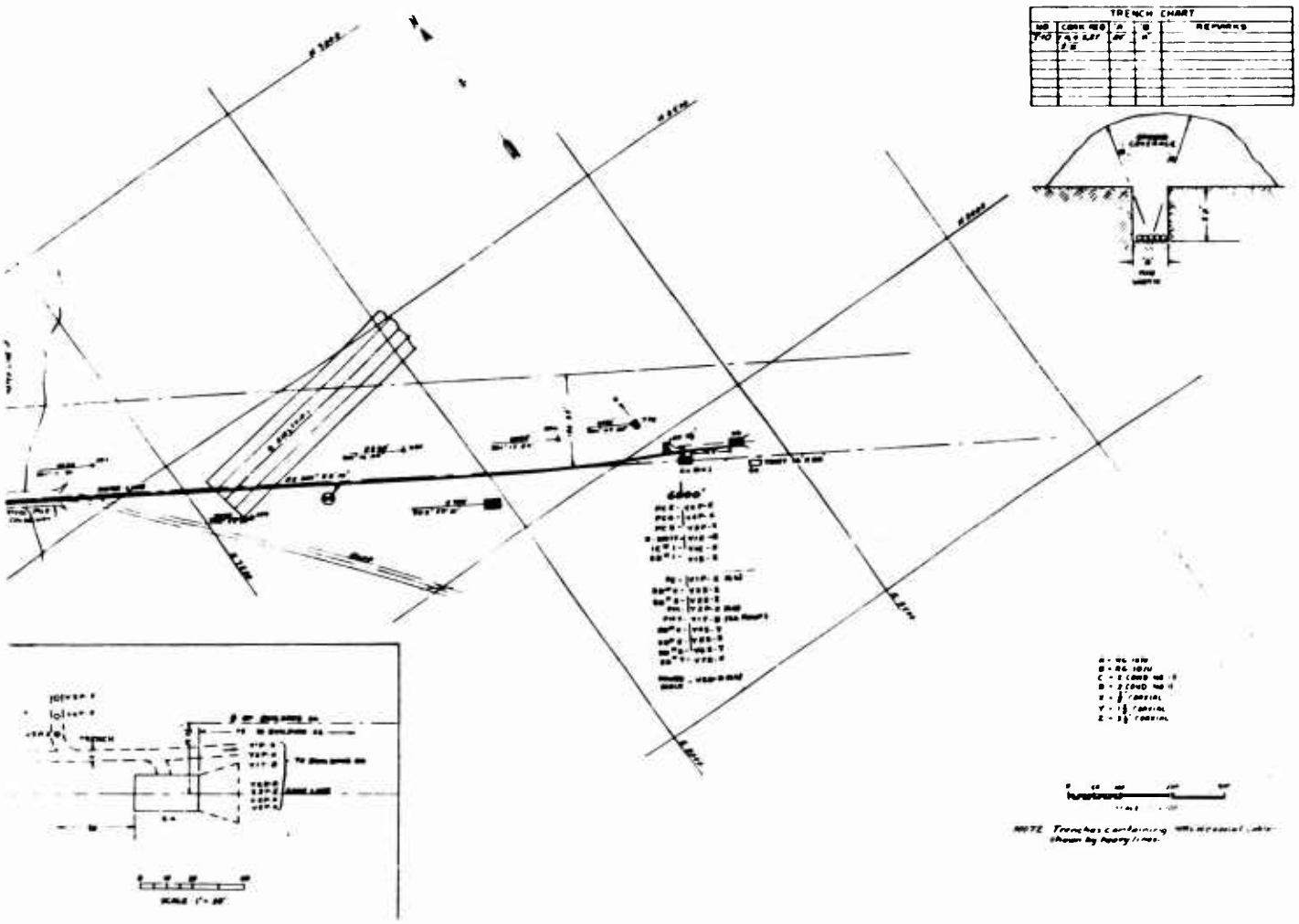

Fig. 24—Layout of cables and external equipment at Site V: Part 3.

TABLE 3

Cables at Site V

Cable No.	Type	Length[a] (ft)	Terminal Connectors	Equipment
1X1	RG-18/U	6,482	UG-154/U	Transit time
1X2	RG-63/U	35	UG-59A/U	Transit time
1X3	RG-63/U	35	UG-59A/U	Transit time
1X2T	RG-63/U	35	UG-59A/U	Transit time
1X3T	RG-63/U	35	UG-59A/U	Transit time
1S1	7/8-in. coaxial	465	Flange	Scintillation detector 1S
1S2	3 1/8-in. coaxial	5,857	Flange	Scintillation detector 1S
1S3	7/8-in. coaxial	56	Flange	Scintillation detector 1S
1S4	RG-17/U	50	UG-154/U	Scintillation detector 1S
1S5	RG-8/U	20	UG-59A/U	Scintillation detector 1S
1SD2	RG-63/U	35	UG-59A/U	Scintillation detector 1S
1ST	RG-63/U	35	UG-59A/U	Scintillation detector 1S
2S1	7/8-in. coaxial	40	Flange	Scintillation detector 2S
2S2	3 1/8-in. coaxial	3,932	Flange	Scintillation detector 2S
2S3	7/8-in. coaxial	50	Flange	Scintillation detector 2S
2S4	RG-17/U	50	UG-154/U	Scintillation detector 2S
2S5	RG-8/U	20	UG-59A/U	Scintillation detector 2S
2S6	RG-8/U	20	UG-59A/U	Scintillation detector 2S
2SD1	RG-63/U	35	UG-59A/U	Scintillation detector 2S
2SD2	RG-63/U	35	UG-59A/U	Scintillation detector 2S
2ST	RG-63/U	35	UG-59A/U	Scintillation detector 2S
2S3D1	RG-63/U	35	UG-59A/U	XY timer 2S3
2S3D2	RG-63/U	35	UG-59A/U	XY timer 2S3
2S3D3	RG-63/U	35	UG-59A/U	XY timer 2S3
2S3D4	RG-63/U	35	UG-59A/U	XY timer 2S3
2S3T	RG-63/U	5	UG-59A/U	XY timer 2S3
3S1	7/8-in. coaxial	33	Flange	Scintillation detector 3S
3S2	3 1/8-in. coaxial	3,932	Flange	Scintillation detector 3S
3S3	7/8-in. coaxial	50	Flange	Scintillation detector 3S
3S4	RG-17/U	50	UG-154/U	Scintillation detector 3S
3S5	RG-8/U	20	UG-59A/U	Scintillation detector 3S
3S6	RG-8/U	20	UG-59A/U	Scintillation detector 3S
3SD1	RG-63/U	35	UG-59A/U	Scintillation detector 3S
3SD2	RG-63/U	35	UG-59A/U	Scintillation detector 3S
3ST	RG-63/U	35	UG-59A/U	Scintillation detector 3S

[a] Nominal only; actual physical lengths depended on field contingencies.

TABLE 3 (Continued)

Cable No.	Type	Length[a] (ft)	Terminal Connectors	Equipment
3S4D1	RG-63/U	35	UG-59A/U	XY timer 3S4
3S4D2	RG-63/U	35	UG-59A/U	XY timer 3S4
3S4D3	RG-63/U	35	UG-59A/U	XY timer 3S4
3S4D4	RG-63/U	35	UG-59A/U	XY timer 3S4
3ST	RG-63/U	5	UG-59A/U	XY timer 3S4
4S1	7/8-in. coaxial	84	Flange	Scintillation detector 4S
4S2	1 5/8-in. coaxial	2,020	Flange	Scintillation detector 4S
4S3	RG-18/U	127	UG-154/U	Scintillation detector 4S
4S4	RG-17/U	50	UG-154/U	Scintillation detector 4S
4S5	RG-8/U	20	UG-59A/U	Scintillation detector 4S
4S6	RG-8/U	20	UG-59A/U	Scintillation detector 4S
4SD1	RG-63/U	35	UG-59A/U	Scintillation detector 4S
4SD2	RG-63/U	35	UG-59A/U	Scintillation detector 4S
4ST	RG-63/U	35	UG-59A/U	Scintillation detector 4S
4S5D1	RG-63/U	35	UG-59A/U	XY timer 4S5
4S5D2	RG-63/U	35	UG-59A/U	XY timer 4S5
4S5D3	RG-63/U	35	UG-59A/U	XY timer 4S5
4S5D4	RG-63/U	35	UG-59A/U	XY timer 4S5
4S5T	RG-63/U	5	UG-59A/U	XY timer 4S5
5S1	7/8-in. coaxial	96	Flange	Scintillation detector 5S
5S2	3 1/8-in. coaxial	2,020	Flange	Scintillation detector 5S
5S3	7/8-in. coaxial	50	Flange	Scintillation detector 5S
5S4	RG-17/U	50	UG-154/U	Scintillation detector 5S
5S5	RG-8/U	20	UG-59A/U	Scintillation detector 5S
5S6	RG-8/U	20	UG-59A/U	Scintillation detector 5S
5SD1	RG-63/U	35	UG-59A/U	Scintillation detector 5S
5SD2	RG-63/U	35	UG-59A/U	Scintillation detector 5S
5ST	RG-63/U	35	UG-59A/U	Scintillation detector 5S
5S6D1	RG-63/U	35	UG-59A/U	XY timer 5S6
5S6D2	RG-63/U	35	UG-59A/U	XY timer 5S6
5S6D3	RG-63/U	35	UG-59A/U	XY timer 5S6
5S6D4	RG-63/U	35	UG-59A/U	XY timer 5S6
5S6T	RG-63/U	5	UG-59A/U	XY timer 5S6

TABLE 3 (Continued)

Cable No.	Type	Length[a] (ft)	Terminal Connectors	Equipment
6S1	7/8-in. coaxial	77	Flange	Scintillation detector 6S
6S2	1 5/8-in. coaxial	2,020	Flange	Scintillation detector 6S
6S3	7/8-in. coaxial	50	Flange	Scintillation detector 6S
6S4	RG-17/U	50	UG-154/U	Scintillation detector 6S
6S5	RG-8/U	20	UG-59A/U	Scintillation detector 6S
6S6	RG-8/U	20	UG-59A/U	Scintillation detector 6S
6SD1	RG-63/U	35	UG-59A/U	Scintillation detector 6S
6SD2	RG-63/U	35	UG-59A/U	Scintillation detector 6S
6ST	RG-63/U	5	UG-59A/U	Scintillation detector 6S
6S7D1	RG-63/U	35	UG-59A/U	XY timer 6S7
6S7D2	RG-63/U	35	UG-59A/U	XY timer 6S7
6S7D3	RG-63/U	35	UG-59A/U	XY timer 6S7
6S7D4	RG-63/U	35	UG-59A/U	XY timer 6S7
6S7T	RG-63/U	5	UG-59A/U	XY timer 6S7
7S2	7/8-in. coaxial	2,159	Flange	Scintillation detector 7S
7S4	RG-17/U	50	UG-154/U	Scintillation detector 7S
7S5	RG-8/U	20	UG-59A/U	Scintillation detector 7S
7S6	RG-8/U	20	UG-59A/U	Scintillation detector 7S
7SD1	RG-63/U	35	UG-59A/U	Scintillation detector 7S
7SD2	RG-63/U	35	UG-59A/U	Scintillation detector 7S
7ST	RG-63/U	5	UG-59A/U	Scintillation detector 7S
1C1	7/8-in. coaxial	465	Flange	Ion chamber 1C
1C2	7/8-in. coaxial	6,100	Flange	Ion chamber 1C
1C4	RG-17/U	50	UG-154/U	Ion chamber 1C
1C5	RG-8/U	20	UG-59A/U	Ion chamber 1C
1CD2	RG-63/U	35	UG-59A/U	Ion chamber 1C
1CT	RG-63/U	35	UG-59A/U	Ion chamber 1C
3P1	7/8-in. coaxial	15	Flange	Prompt gamma 3P
3P2	7/8-in. coaxial	249	Flange	Prompt gamma 3P
3P3	RG-8/U	1,400	UG-59A/U	Prompt gamma 3P
3PT	RG-8/U	10	UG-59A/U	Prompt gamma 3P
4P1	7/8-in. coaxial	15	Flange	Prompt gamma 4P
4P2	7/8-in. coaxial	255	Flange	Prompt gamma 4P
4P3	RG-8/U	700	UG-59A/U	Prompt gamma 4P
4PT	RG-8/U	10	UG-59A/U	Prompt gamma 4P

TABLE 3 (Continued)

Cable No.	Type	Length[a] (ft)	Terminal Connectors	Equipment
5P1	7/8-in. coaxial	15	Flange	Prompt gamma 5P
5P2	7/8-in. coaxial	261	Flange	Prompt gamma 5P
5P3	RG-8/U	1,500	UG-59A/U	Prompt gamma 5P
5PT	RG-8/U	10	UG-59A/U	Prompt gamma 5P
1T1	RG-63/U	50	UG-59A/U, PL-259A	Tenex
1T2	RG-63/U	4	PL-259A	Tenex
1T3	RG-63/U	3	PL-259A	Tenex
1T4	RG-63/U	3	PL-259A	Tenex
2T2	RG-63/U	6	PL-259A	Tenex
2T3	RG-63/U	3	PL-259A	Tenex
2T4	RG-63/U	3	PL-259A	Tenex
2T5	RG-63/U	6	PL-259A	Tenex
2T6	RG-63/U	3	PL-259A	Tenex
1P1	RG-8/U	25	UG-59A/U	Tenex
1P2	3 1/8-in. coaxial	6,050	Flange	Tenex
1P3	7/8-in. coaxial	20	Flange	Tenex
1P4	RG-8/U	35	UG-59A/U, PL-259A	Tenex
1P5	RG-8/U	3	PL-259A	Tenex
1P6	RG-8/U	3	PL-259A	Tenex
2P1	RG-8/U	20	UG-59A/U	Tenex
2P2	7/8-in. coaxial	3,280	Flange	Tenex
2P3	RG-8/U	35	UG-59A/U, PL-259A	Tenex
2P4	RG-8/U	6	PL-259A	Tenex
2P5	RG-8/U	3	PL-259A	Tenex
2P6	RG-8/U	6	PL-259A	Tenex
2P7	RG-8/U	3	PL-259A	Tenex

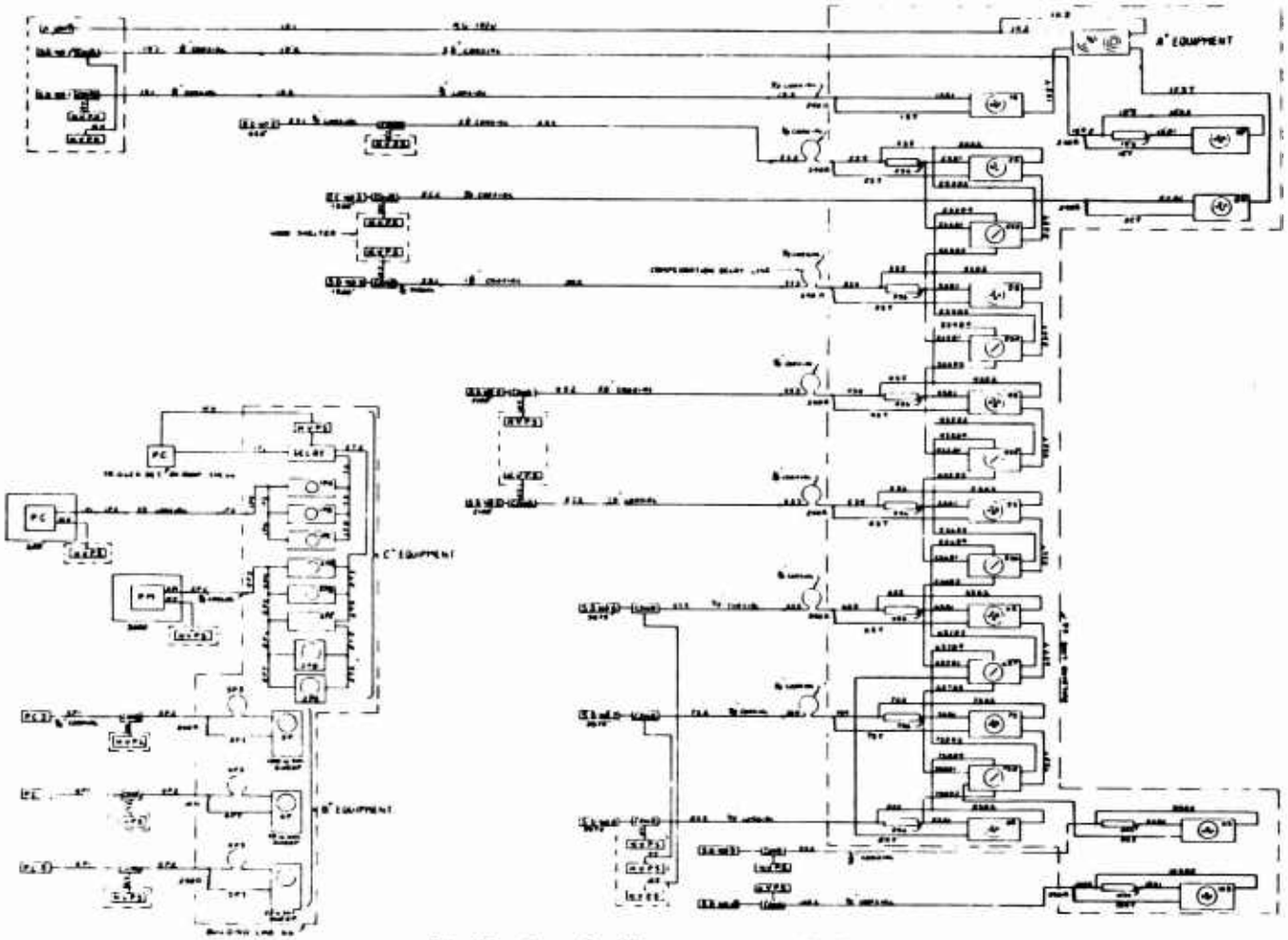

Fig. 25 — General cable arrangement at Site E+.

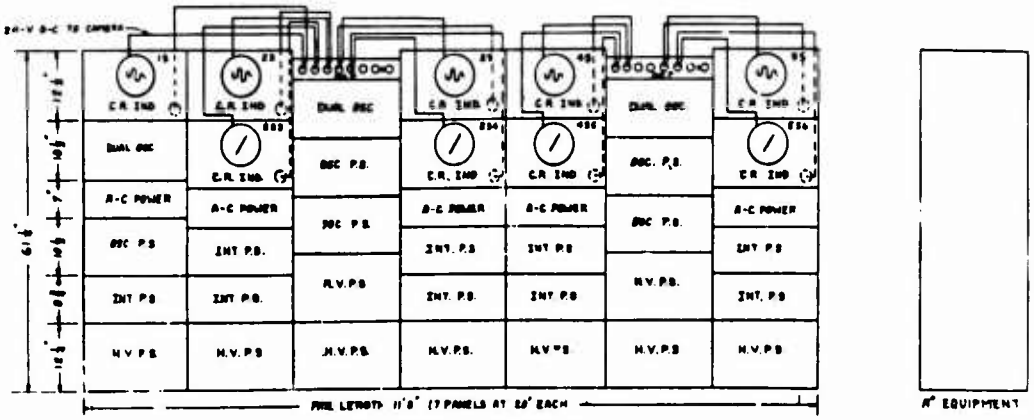

RACK ARRANGEMENT OF EQUIPMENT "A"

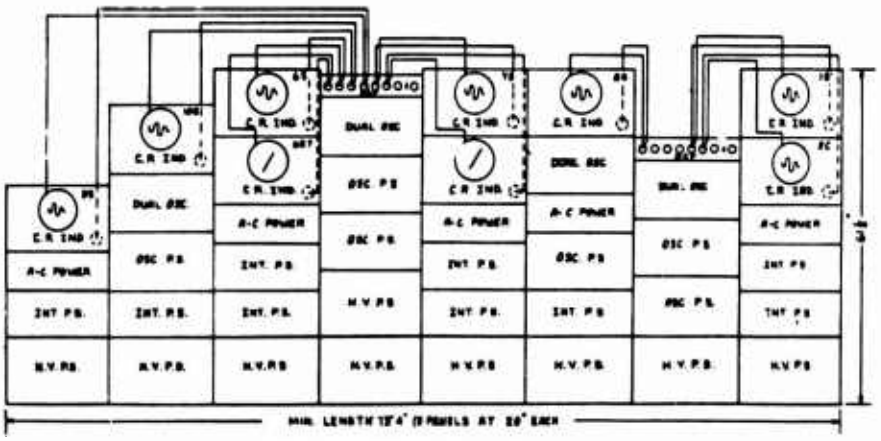

RACK ARRANGEMENT OF EQUIPMENT "B"

Fig. 26—Recording equipment in station 6a at Site E+. Front view.

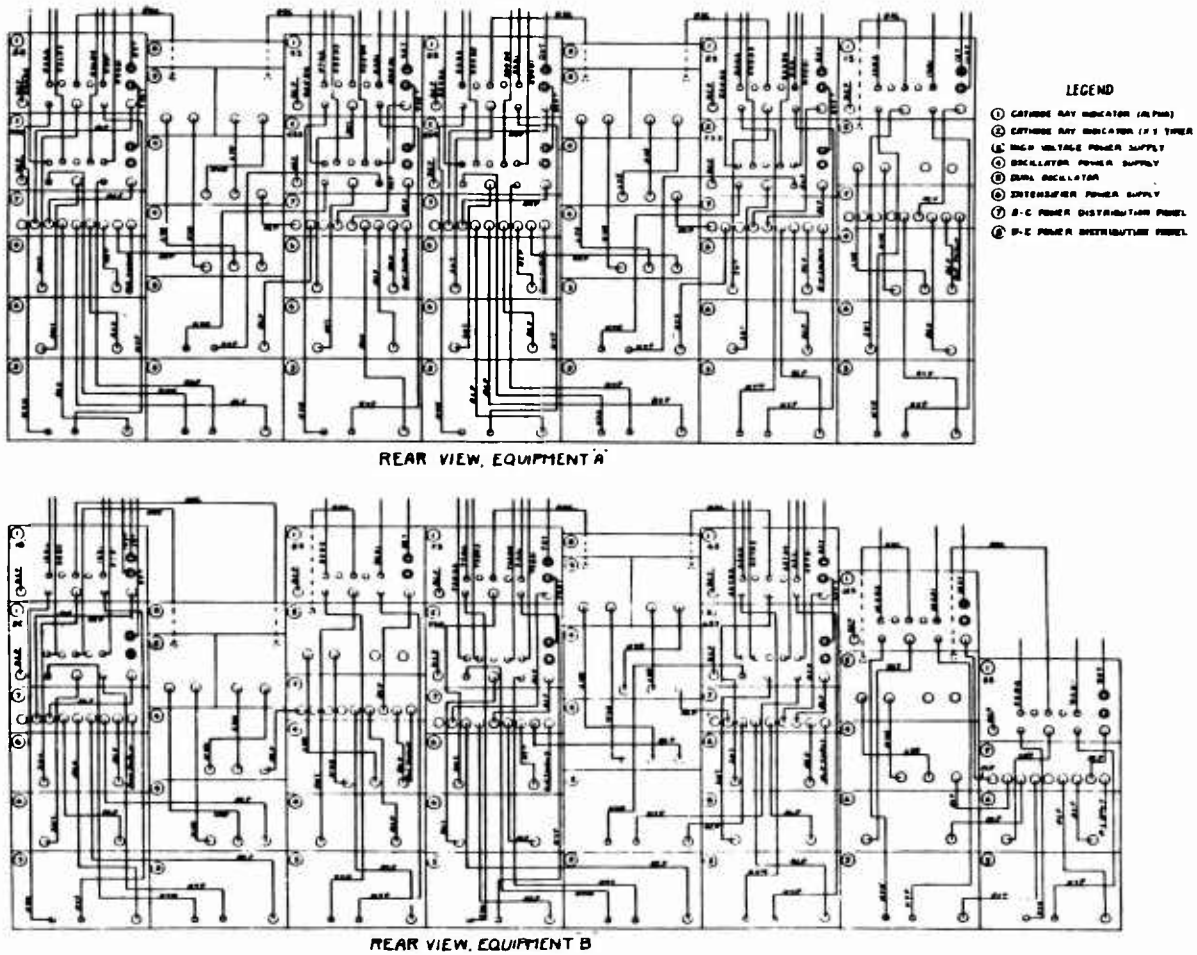

Fig. 27—Cable arrangement for alpha-recording equipment at Site E+.

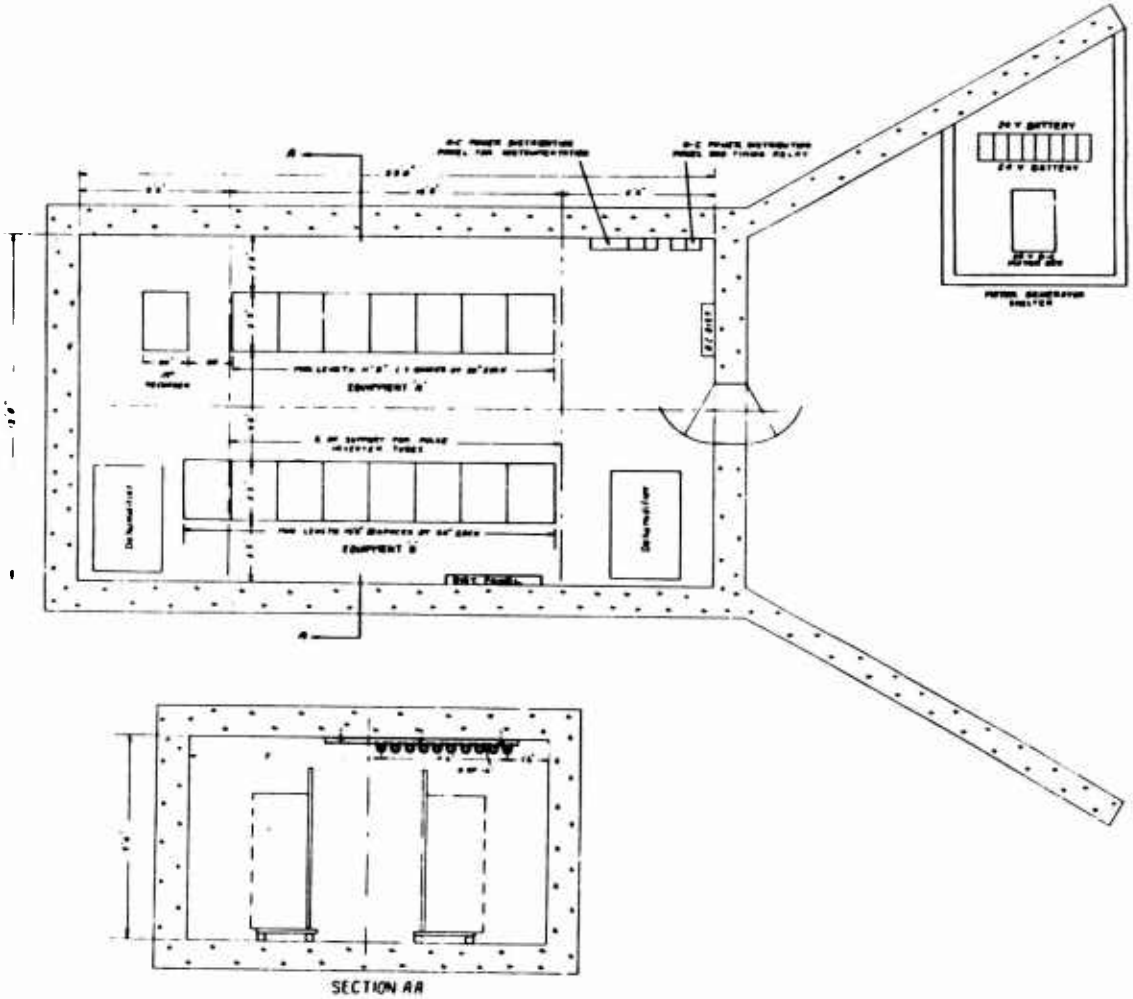

Fig. 28—Arrangement of equipment in station 6a at Site E+.

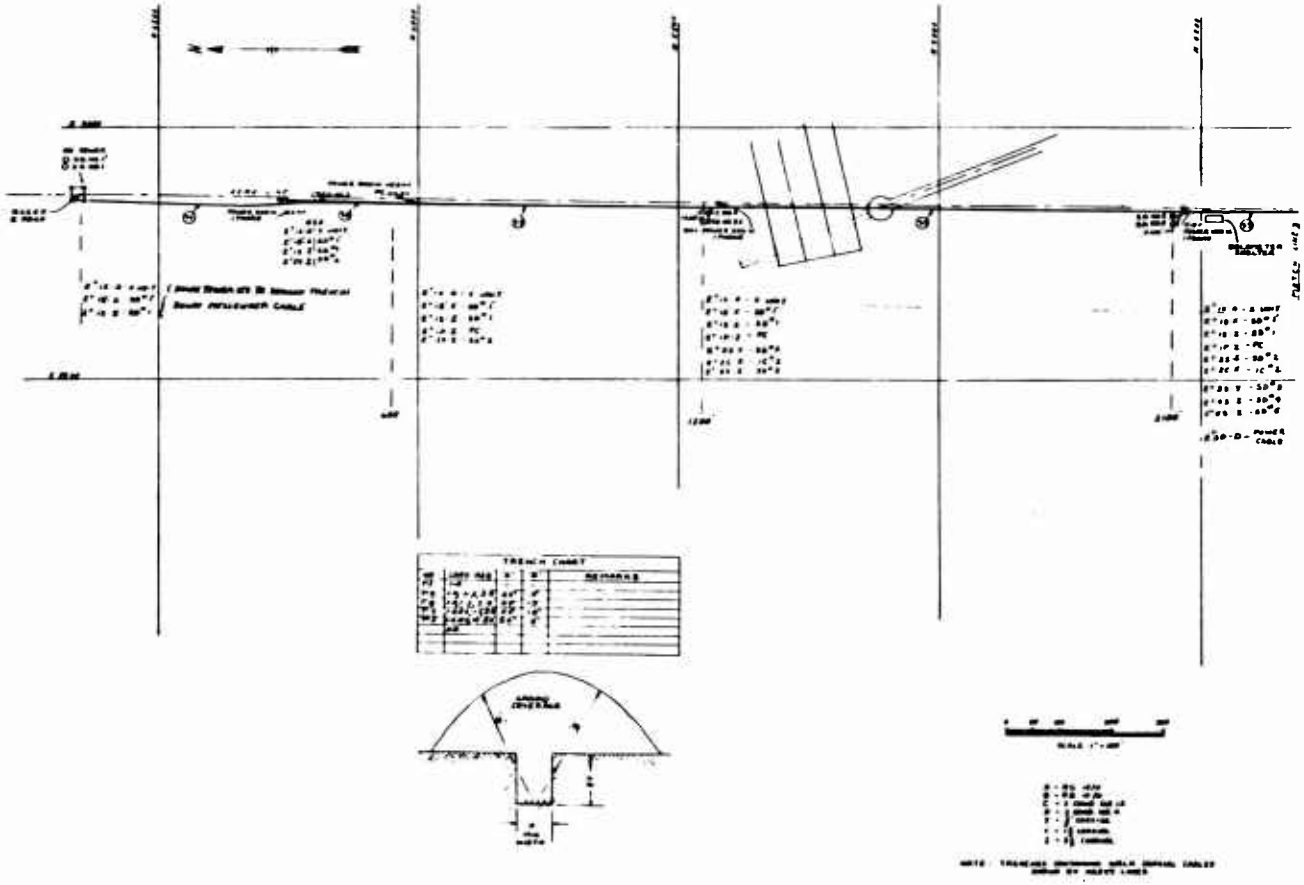

Fig. 29—Layout of cables and external equipment at Site E+: Part 1.

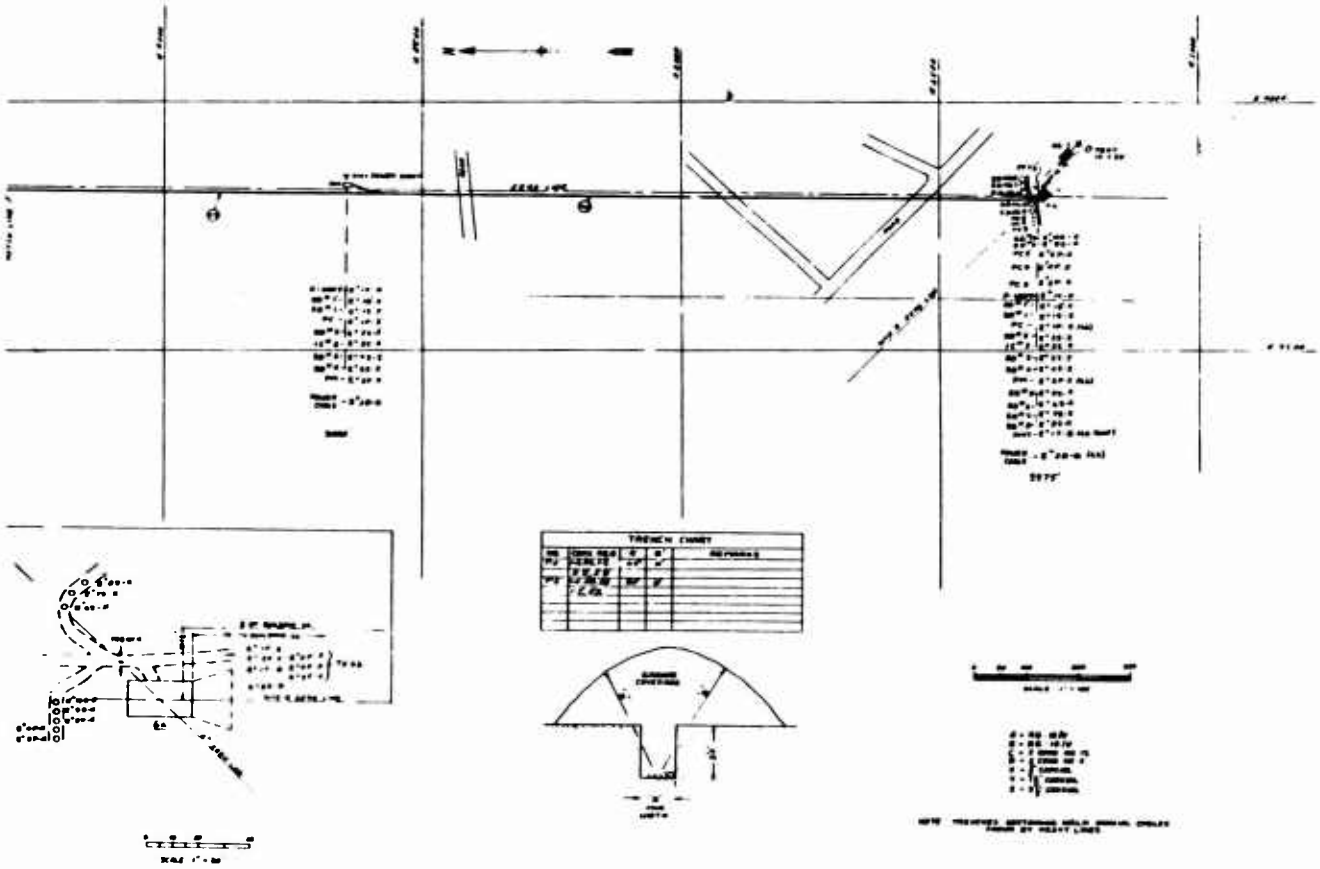

Fig. 30—Layout of cables and external equipment at Site E+: Part 2.

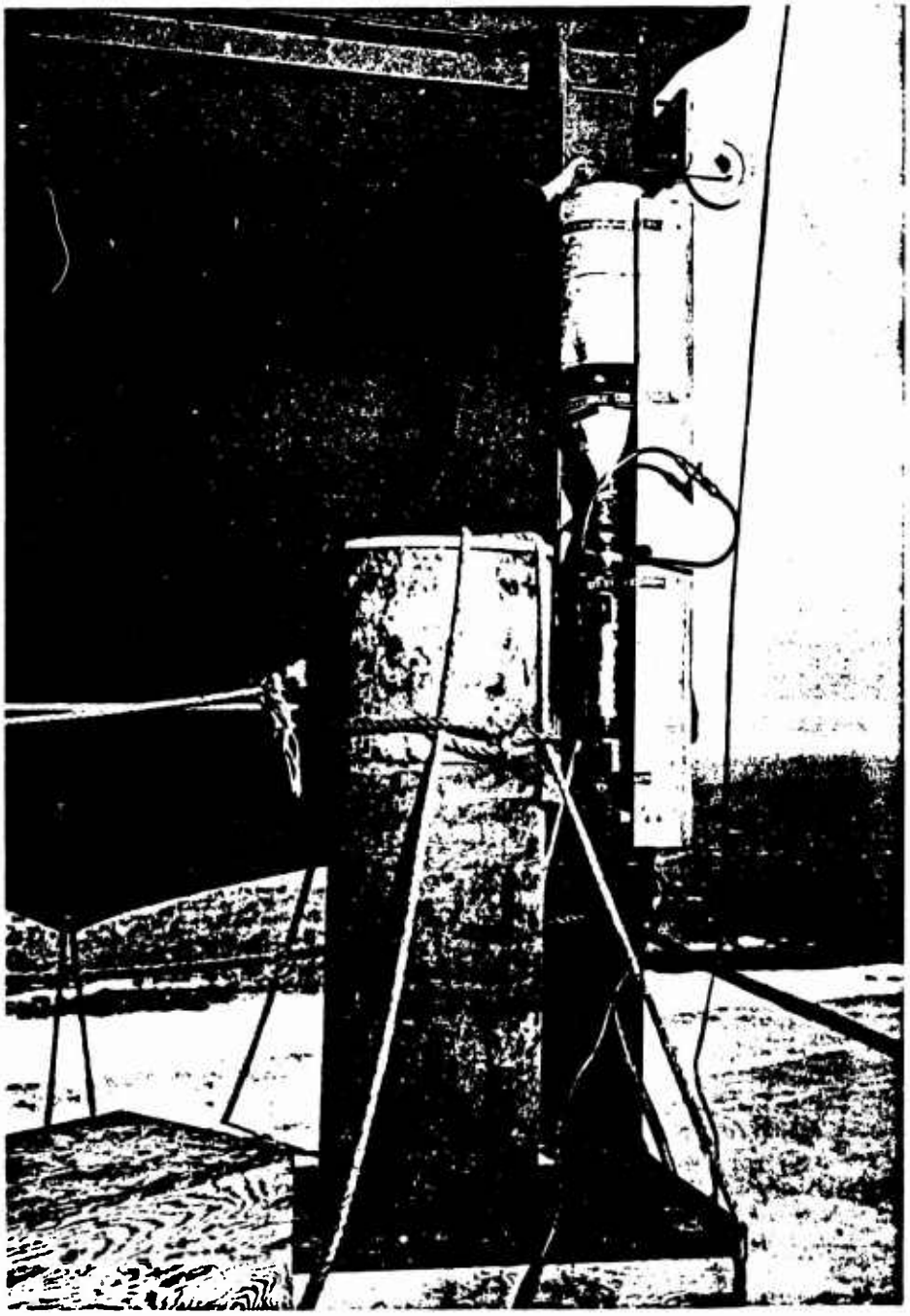

Fig. 31—Scintillation-detector installation on tower at Site E+.

TABLE 4

Cables at Site E+

Cable No.	Type	Length[a] (ft)	Terminal Connectors	Equipment
1X1	RG-18/U	4,379	UG-154/U	Transit time
1X2	RG-63/U	35	UG-59A/U	Transit time
1X3	RG-63/U	35	UG-59A/U	Transit time
1X2T	RG-63/U	35	UG-59A/U	Transit time
1X3T	RG-63/U	35	UG-59A/U	Transit time
1S1	7/8-in. coaxial	430	Flange	Scintillation detector 1S
1S2	7/8-in. coaxial	3,904	Flange	Scintillation detector 1S
1S3	7/8-in. coaxial	45	Flange	Scintillation detector 1S
1S4	RG-17/U	50	UG-154/U	Scintillation detector 1S
1S5	RG-8/U	20	UG-59A/U	Scintillation detector 1S
1SD2	RG-63/U	35	UG-59A/U	Scintillation detector 1S
1ST	RG-63/U	35	UG-59A/U	Scintillation detector 1S
1S'1	7/8-in. coaxial	430	Flange	Scintillation detector 1S'
1S'2	3 1/8-in. coaxial	3,888	Flange	Scintillation detector 1S'
1S'3	7/8-in. coaxial	45	Flange	Scintillation detector 1S'
1S'4	RG-17/U	50	UG-154/U	Scintillation detector 1S'
1S'5	RG-8/U	20	UG-59A/U	Scintillation detector 1S'
1S'6	RG-8/U	20	UG-59A/U	Scintillation detector 1S'
1S'D1	RG-63/U	35	UG-59A/U	Scintillation detector 1S'
1S'D2	RG-63/U	35	UG-59A/U	Scintillation detector 1S'
1S'T	RG-63/U	35	UG-59A/U	Scintillation detector 1S'
2S1	7/8-in. coaxial	17	Flange	Scintillation detector 2S
2S2	3 1/8-in. coaxial	3,850	Flange	Scintillation detector 2S
2S3	7/8-in. coaxial	350	Flange	Scintillation detector 2S
2S4	RG-17/U	83	UG-154/U	Scintillation detector 2S
2S5	RG-8/U	20	UG-59A/U	Scintillation detector 2S
2S6	RG-8/U	20	UG-59A/U	Scintillation detector 2S
2SD1	RG-63/U	35	UG-59A/U	Scintillation detector 2S
2SD2	RG-63/U	35	UG-59A/U	Scintillation detector 2S
2ST	RG-63/U	35	UG-59A/U	Scintillation detector 2S
2S3D1	RG-63/U	35	UG-59A/U	XY timer 2S3
2S3D2	RG-63/U	35	UG-59A/U	XY timer 2S3
2S3D3	RG-63/U	35	UG-59A/U	XY timer 2S3
2S3D4	RG-63/U	35	UG-59A/U	XY timer 2S3
2S3T	RG-63/U	5	UG-59A/U	XY timer 2S3

[a] Nominal only; actual physical lengths depended on field contingencies.

TABLE 4 (Continued)

Cable No.	Type	Length[a] (ft)	Terminal Connectors	Equipment
3S1	7/8-in. coaxial	15	Flange	Scintillation detector 3S
3S2	1 5/8-in. coaxial	3,100	Flange	Scintillation detector 3S
3S3	7/8-in. coaxial	250	Flange	Scintillation detector 3S
3S4	RG-17/U	83	UG-154/U	Scintillation detector 3S
3S5	RG-8/U	20	UG-59A/U	Scintillation detector 3S
3S6	RG-8/U	20	UG-59A/U	Scintillation detector 3S
3SD1	RG-63/U	35	UG-59A/U	Scintillation detector 3S
3SD2	RG-63/U	35	UG-59A/U	Scintillation detector 3S
3ST	RG-63/U	35	UG-59A/U	Scintillation detector 3S
3S4D1	RG-63/U	35	UG-59A/U	XY timer 3S4
3S4D2	RG-63/U	35	UG-59A/U	XY timer 3S4
3S4D3	RG-63/U	35	UG-59A/U	XY timer 3S4
3S4D4	RG-63/U	35	UG-59A/U	XY timer 3S4
3S4T	RG-63/U	5	UG-59A/U	XY timer 3S4
4S1	7/8-in. coaxial	41	Flange	Scintillation detector 4S
4S2	3 1/8-in. coaxial	2,200	Flange	Scintillation detector 4S
4S3	7/8-in. coaxial	150	Flange	Scintillation detector 4S
4S4	RG-17/U	83	UG-154/U	Scintillation detector 4S
4S5	RG-8/U	20	UG-59A/U	Scintillation detector 4S
4S6	RG-8/U	20	UG-59A/U	Scintillation detector 4S
4SD1	RG-63/U	35	UG-59A/U	Scintillation detector 4S
4SD2	RG-63/U	35	UG-59A/U	Scintillation detector 4S
4ST	RG-63/U	35	UG-59A/U	Scintillation detector 4S
4S5D1	RG-63/U	35	UG-59A/U	XY timer 4S5
4S5D2	RG-63/U	35	UG-59A/U	XY timer 4S5
4S5D3	RG-63/U	35	UG-59A/U	XY timer 4S5
4S5D4	RG-63/U	35	UG-59A/U	XY timer 4S5
4S5T	RG-63/U	5	UG-59A/U	XY timer 4S5
5S1	7/8-in. coaxial	64	Flange	Scintillation detector 5S
5S2	3 1/8-in. coaxial	2,180	Flange	Scintillation detector 5S
5S3	7/8-in. coaxial	100	Flange	Scintillation detector 5S
5S4	RG-17/U	83	UG-154/U	Scintillation detector 5S
5S5	RG-8/U	20	UG-59A/U	Scintillation detector 5S
5S6	RG-8/U	20	UG-59A/U	Scintillation detector 5S
5SD1	RG-63/U	35	UG-59A/U	Scintillation detector 5S
5SD2	RG-63/U	35	UG-59A/U	Scintillation detector 5S
5ST	RG-63/U	35	UG-59A/U	Scintillation detector 5S
5S6D1	RG-63/U	35	UG-59A/U	XY timer 5S6
5S6D2	RG-63/U	35	UG-59A/U	XY timer 5S6
5S6D3	RG-63/U	35	UG-59A/U	XY timer 5S6

TABLE 4 (Continued)

Cable No.	Type	Length[a] (ft)	Terminal Connectors	Equipment
5S6D4	RG-63/U	35	UG-59A/U	XY timer 5S6
5S6T	RG-63/U	5	UG-59A/U	XY timer 5S6
6S2	7/8-in. coaxial	23	Flange	Scintillation detector 6S
6S3	7/8-in. coaxial	67	Flange	Scintillation detector 6S
6S4	RG-17/U	83	UG-154/U	Scintillation detector 6S
6S5	RG-8/U	20	UG-59A/U	Scintillation detector 6S
6S6	RG-8/U	20	UG-59A/U	Scintillation detector 6S
6SD1	RG-63/U	35	UG-59A/U	Scintillation detector 6S
6SD2	RG-63/U	35	UG-59A/U	Scintillation detector 6S
6ST	RG-63/U	35	UG-59A/U	Scintillation detector 6S
6S7D1	RG-63/U	35	UG-59A/U	XY timer 6S7
6S7D2	RG-63/U	35	UG-59A/U	XY timer 6S7
6S7D3	RG-63/U	35	UG-59A/U	XY timer 6S7
6S7D4	RG-63/U	35	UG-59A/U	XY timer 6S7
6S7T	RG-63/U	5	UG-59A/U	XY timer 6S7
7S2	7/8-in. coaxial	56	Flange	Scintillation detector 7S
7S3	7/8-in. coaxial	16	Flange	Scintillation detector 7S
7S4	RG-17/U	83	UG-154/U	Scintillation detector 7S
7S5	RG-8/U	20	UG-59A/U	Scintillation detector 7S
7S6	RG-8/U	20	UG-59A/U	Scintillation detector 7S
7SD1	RG-63/U	35	UG-59A/U	Scintillation detector 7S
7SD2	RG-63/U	35	UG-59A/U	Scintillation detector 7S
7ST	RG-63/U	35	UG-59A/U	Scintillation detector 7S
7S8D1	RG-63/U	35	UG-59A/U	XY timer 7S8
7S8D2	RG-63/U	35	UG-59A/U	XY timer 7S8
7S8D3	RG-63/U	35	UG-59A/U	XY timer 7S8
7S8D4	RG-63/U	35	UG-59A/U	XY timer 7S8
7S8T	RG-63/U	5	UG-59A/U	XY timer 7S8
8S2	7/8-in. coaxial	60	Flange	Scintillation detector 8S
8S4	RG-17/U	83	UG-154/U	Scintillation detector 8S
8S5	RG-8/U	20	UG-59A/U	Scintillation detector 8S
8S6	RG-8/U	20	UG-59A/U	Scintillation detector 8S
8SD1	RG-63/U	35	UG-59A/U	Scintillation detector 8S
8SD2	RG-63/U	35	UG-59A/U	Scintillation detector 8S
8ST	RG-63/U	5	UG-59A/U	Scintillation detector 8S

TABLE 4 (Continued)

Cable No.	Type	Length[a] (ft)	Terminal Connectors	Equipment
9S2	7/8-in. coaxial	84	Flange	Scintillation detector 9S
9S4	RG-17/U	66	UG-154/U	Scintillation detector 9S
9S5	RG-8/U	20	UG-59A/U	Scintillation detector 9S
9S6	RG-8/U	20	UG-59A/U	Scintillation detector 9S
9SD1	RG-63/U	35	UG-59A/U	Scintillation detector 9S
9SD2	RG-63/U	35	UG-59A/U	Scintillation detector 9S
9ST	RG-63/U	5	UG-59A/U	Scintillation detector 9S
10S2	7/8-in. coaxial	46	Flange	Scintillation detector 10S
10S4	RG-17/U	83	UG-154/U	Scintillation detector 10S
10S5	RG-8/U	20	UG-59A/U	Scintillation detector 10S
10S6	RG-8/U	20	UG-59A/U	Scintillation detector 10S
10SD1	RG-63/U	35	UG-59A/U	Scintillation detector 10S
10SD2	RG-63/U	35	UG-59A/U	Scintillation detector 10S
10ST	RG-63/U	35	UG-59A/U	Scintillation detector 10S
2C2	7/8-in. coaxial	3,180	Flange	Ion chamber 2C
2C4	RG-17/U	50	UG-154/U	Ion chamber 2C
2C5	RG-8/U	20	UG-59A/U	Ion chamber 2C
2CD2	RG-63/U	35	UG-59A/U	Ion chamber 2C
2CT	RG-63/U	35	UG-59A/U	Ion chamber 2C
3P1	7/8-in. coaxial	15	Flange	Prompt gamma 3P
3P2	7/8-in. coaxial	176	Flange	Prompt gamma 3P
3P3	RG-8/U	1,400	UG-59A/U	Prompt gamma 3P
3PT	RG-8/U	10	UG-59A/U	Prompt gamma 3P
4P1	7/8-in. coaxial	15	Flange	Prompt gamma 4P
4P2	7/8-in. coaxial	171	Flange	Prompt gamma 4P
4P3	RG-8/U	700	UG-59A/U	Prompt gamma 4P
4PT	RG-8/U	10	UG-59A/U	Prompt gamma 4P
5P1	7/8-in. coaxial	15	Flange	Prompt gamma 5P
5P2	7/8-in. coaxial	165	Flange	Prompt gamma 5P
5P3	RG-8/U	1,500	UG-59A/U	Prompt gamma 5P
5PT	RG-8/U	10	UG-59A/U	Prompt gamma 5P

TABLE 4 (Continued)

Cable No.	Type	Length[a] (ft)	Terminal Connectors	Equipment
1T1	RG-63/U	50	UG-59A/U, PL-259A	Tenex
1T2	RG-63/U	4	PL-259A	Tenex
1T3	RG-63/U	3	PL-259A	Tenex
1T4	RG-63/U	3	PL-259A	Tenex
2T2	RG-63/U	6	PL-259A	Tenex
2T3	RG-63/U	3	PL-259A	Tenex
2T4	RG-63/U	3	PL-259A	Tenex
2T5	RG-63/U	6	PL-259A	Tenex
2T6	RG-63/U	3	PL-259A	Tenex
1P1	RG-8/U	27	UG-59A/U	Tenex
1P2	3 1/8-in. coaxial	3,865	Flange	Tenex
1P3	7/8-in. coaxial	20	Flange	Tenex
1P4	RG-8/U	35	UG-59A/U, PL-259A	Tenex
1P5	RG-8/U	3	PL-259A	Tenex
1P6	RG-8/U	3	PL-259A	Tenex
2P1	RG-8/U	15	UG-59A/U	Tenex
2P2	7/8-in. coaxial	1,535	Flange	Tenex
2P3	RG-8/U	35	UG-59A/U, PL-259A	Tenex
2P4	RG-8/U	6	PL-259A	Tenex
2P5	RG-8/U	3	PL-259A	Tenex
2P6	RG-8/U	6	PL-259A	Tenex
2P7	RG-8/U	3	PL-259A	Tenex

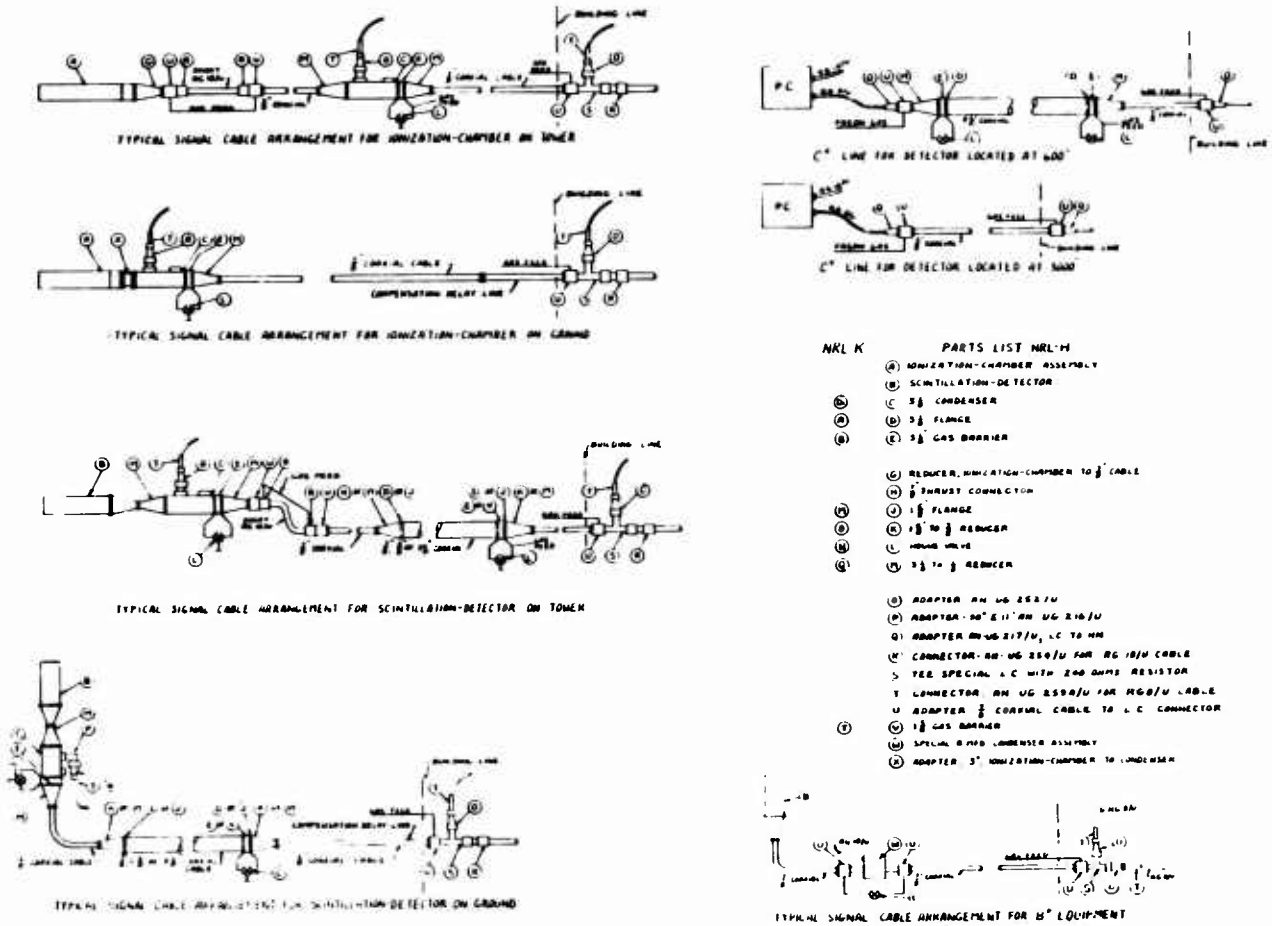

Fig. 32—Connection detail for signal cable.

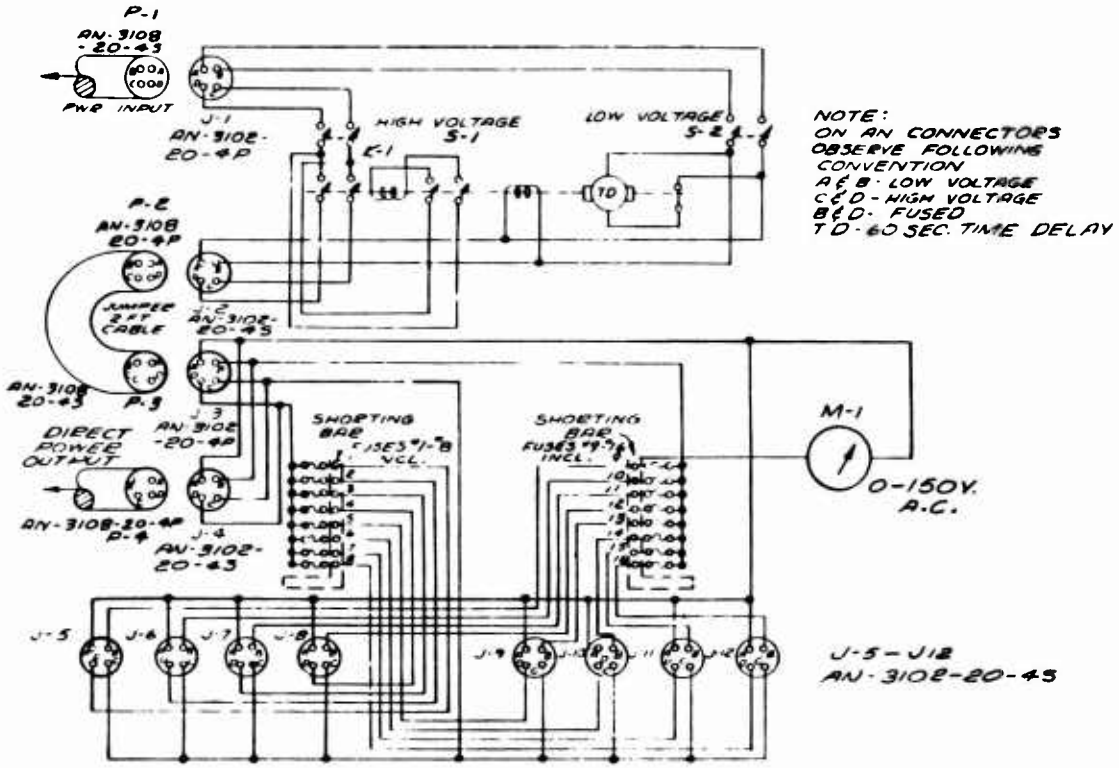

Fig. 33—Power distribution panel: Schematic diagram.

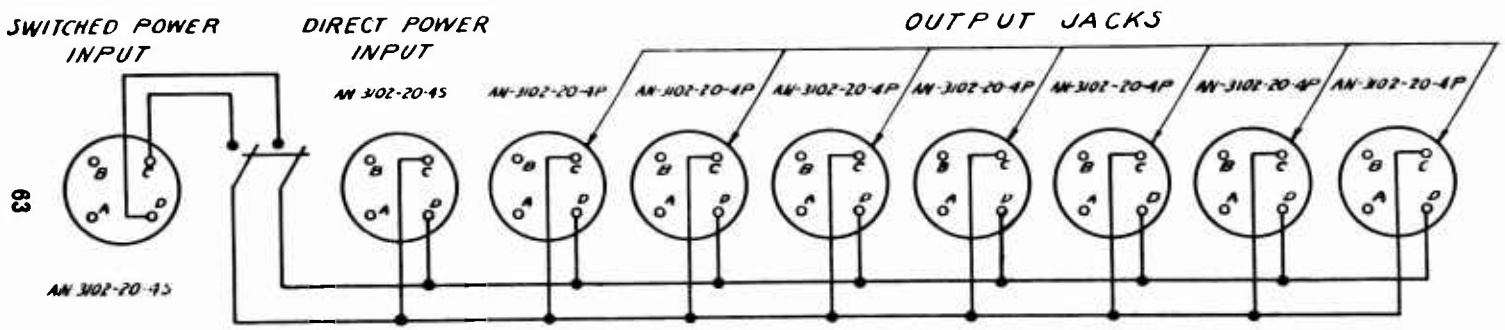

Fig. 34—Twenty-four-volt distribution panel.

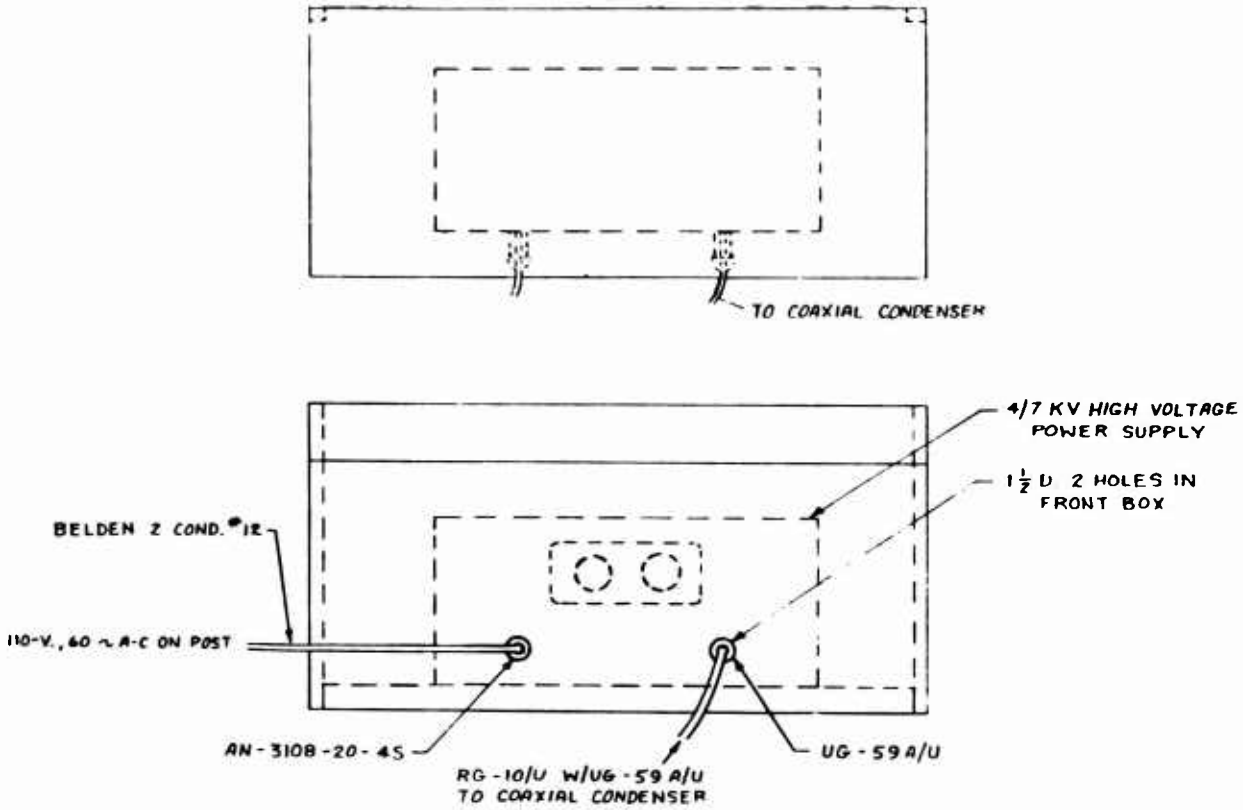

Fig. 35—Housing and connection details for high-voltage power supply.

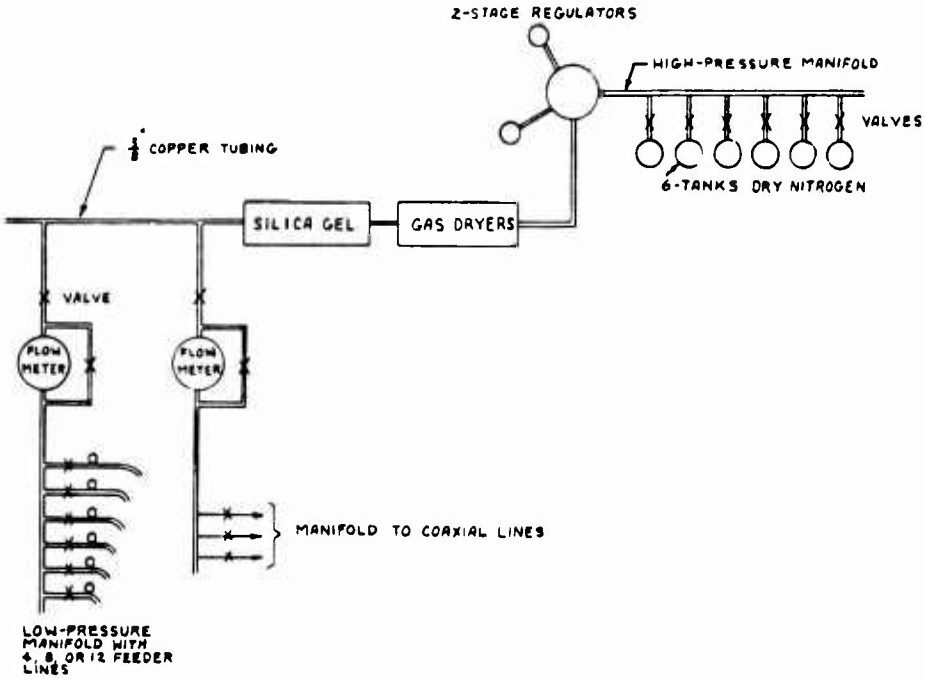

Fig. 36—First method of gas-filling and pressurizing coaxial cables.

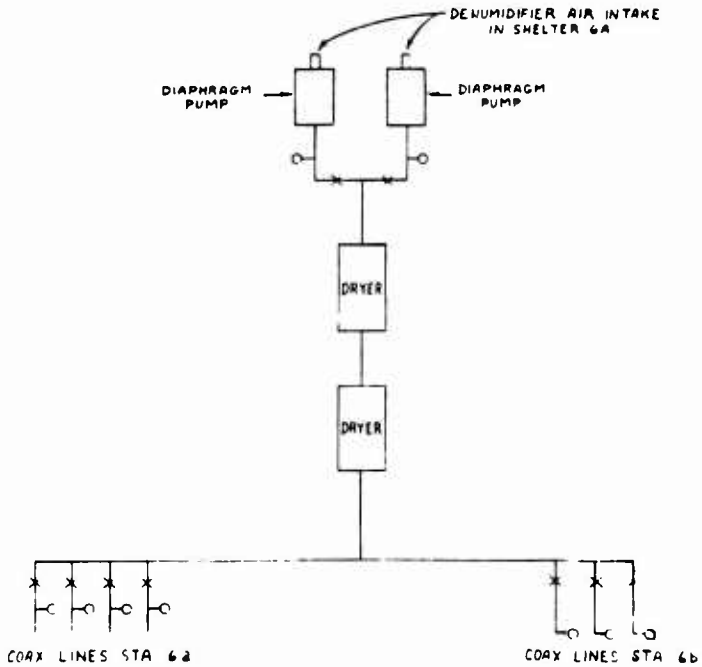

Fig. 37—Preferred method of gas-filling and pressurizing coaxial cables.

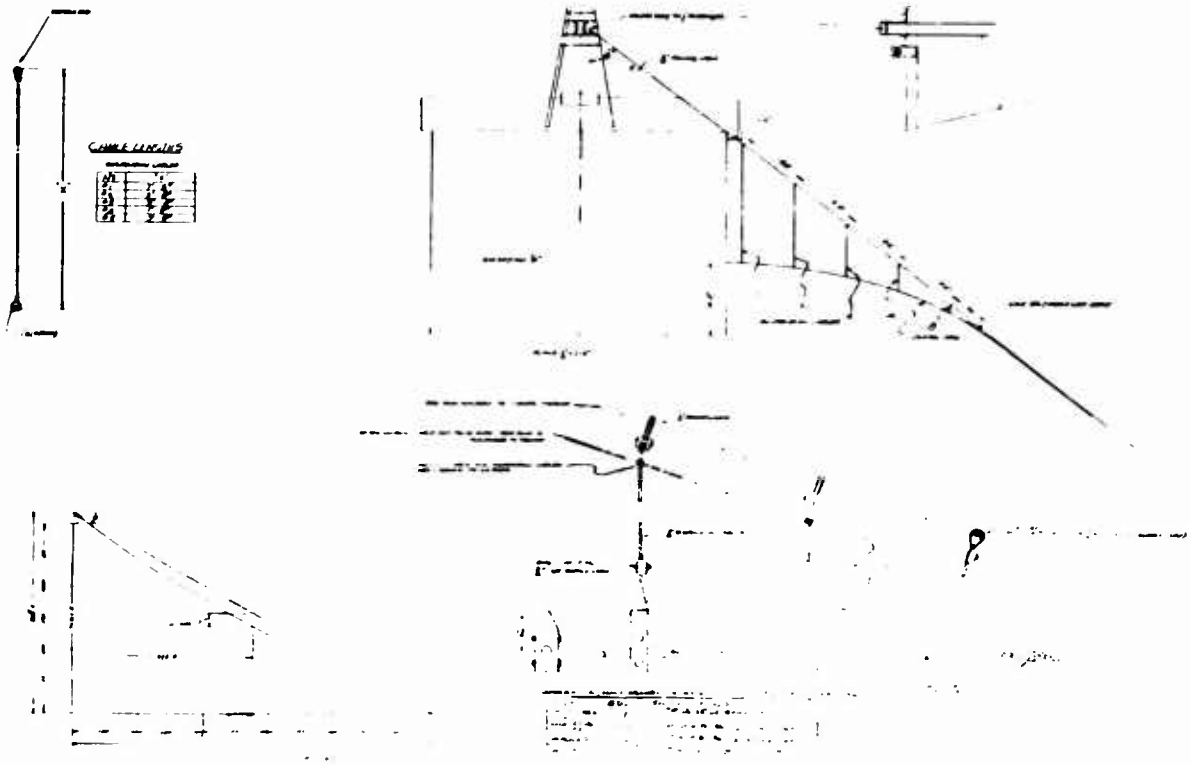

Fig. 38—Method of supporting coaxial cable at top of catenary.

Fig. 39—Typical catenary installation.

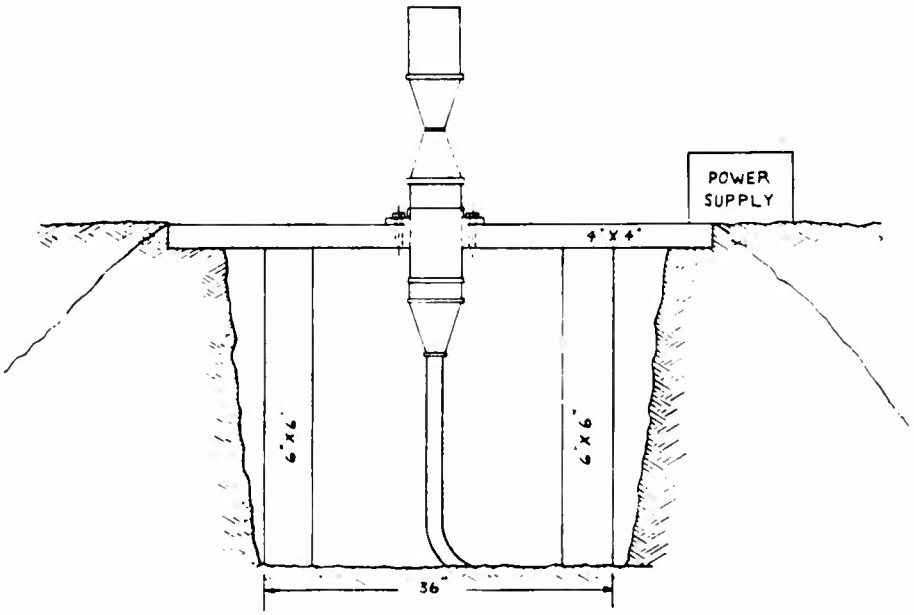

Fig. 40—Method of supporting scintillation-detector and condenser assemblies.

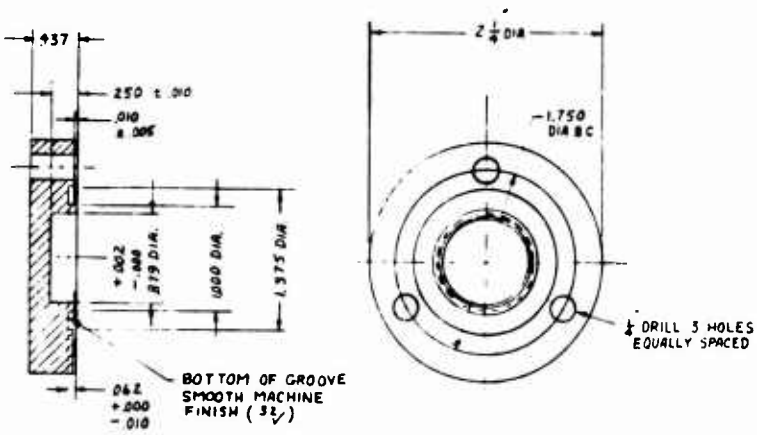

MATERIAL BRASS (NAVAL)
MUST BE PRESSURE TIGHT

NOTE: REMOVE SHARP EDGES

Fig. 42—Special flange for 3/8- to 1/4-in. reducer.

Page 70 deleted.

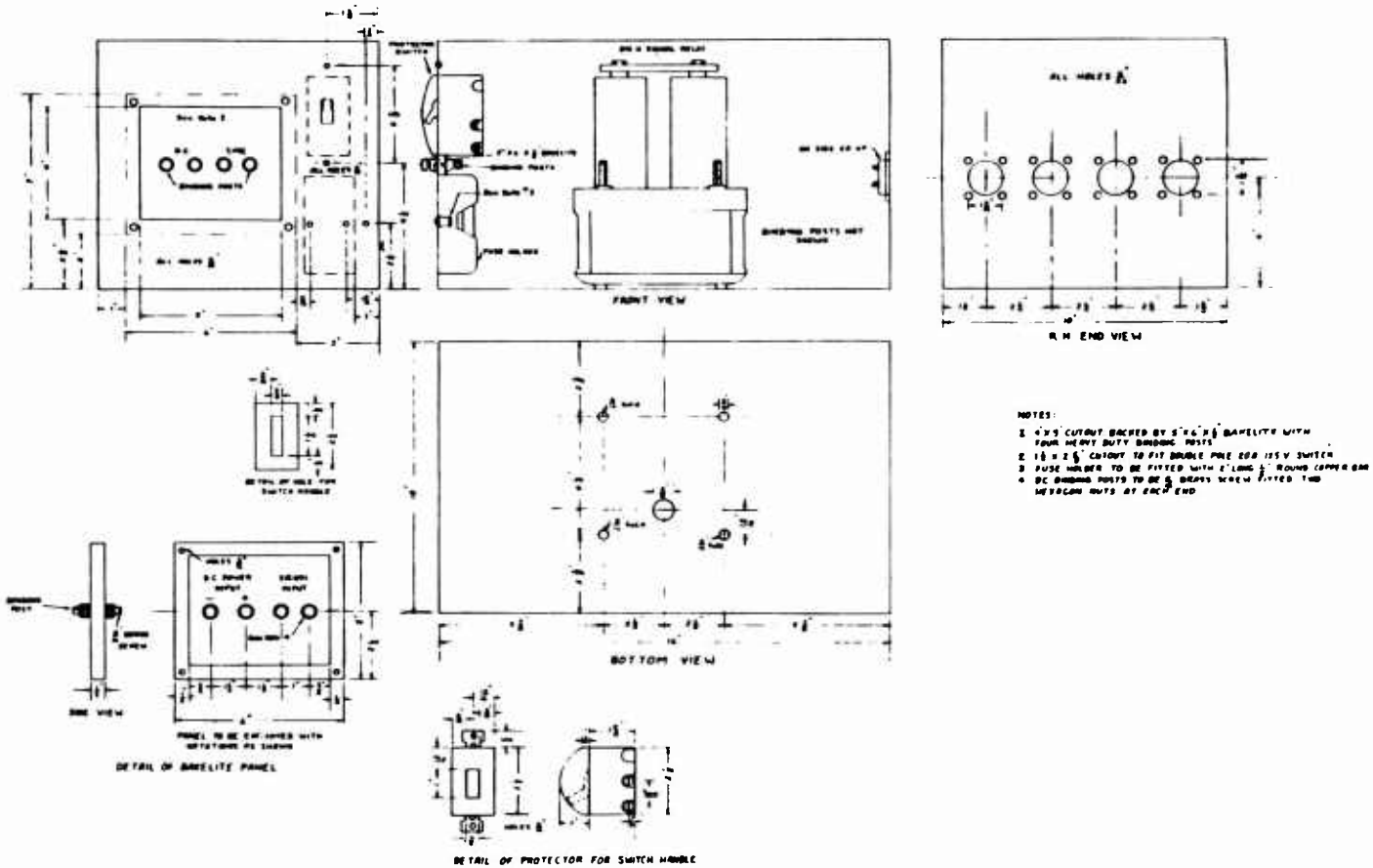

Fig. 43—Relay box.

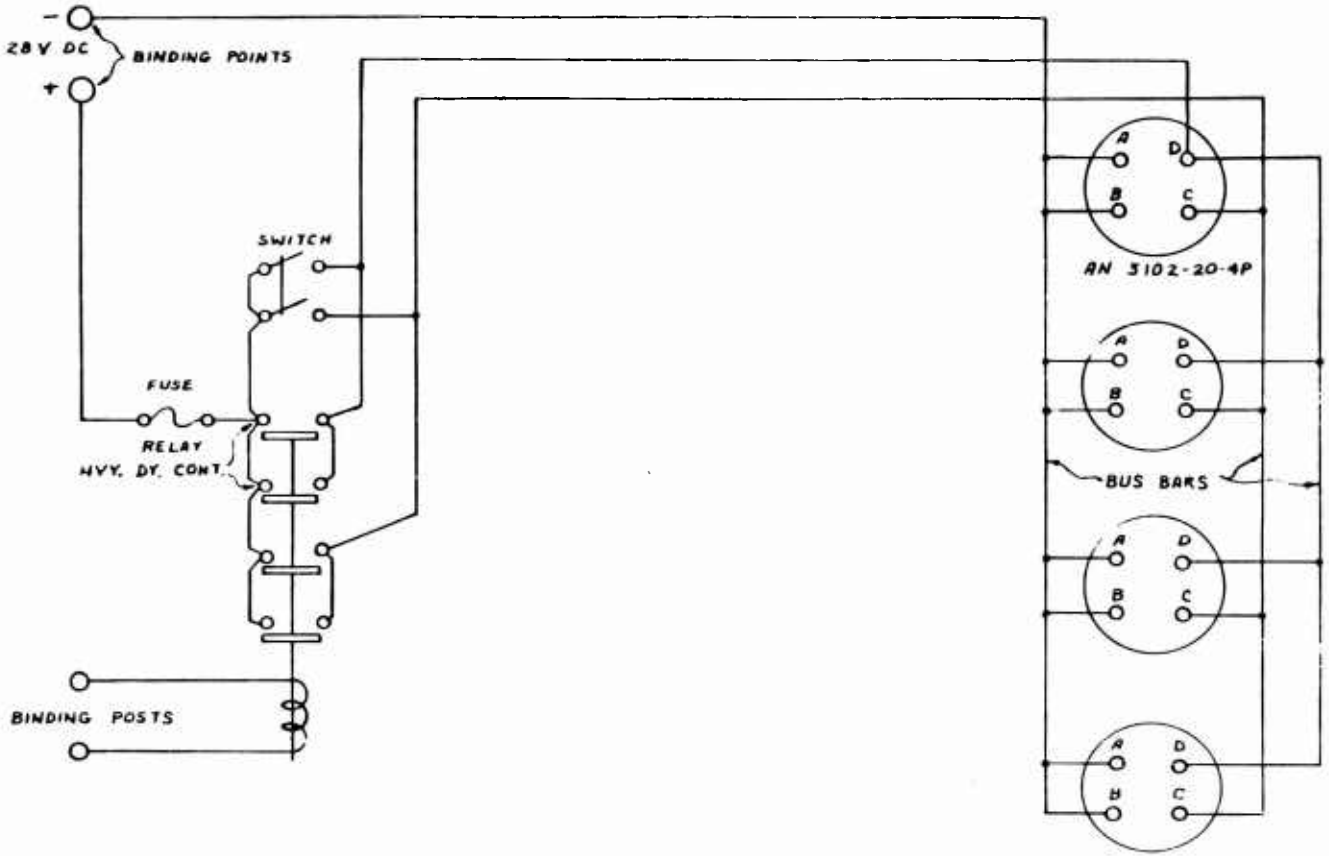

Fig. 44—Relay-box wiring diagram.

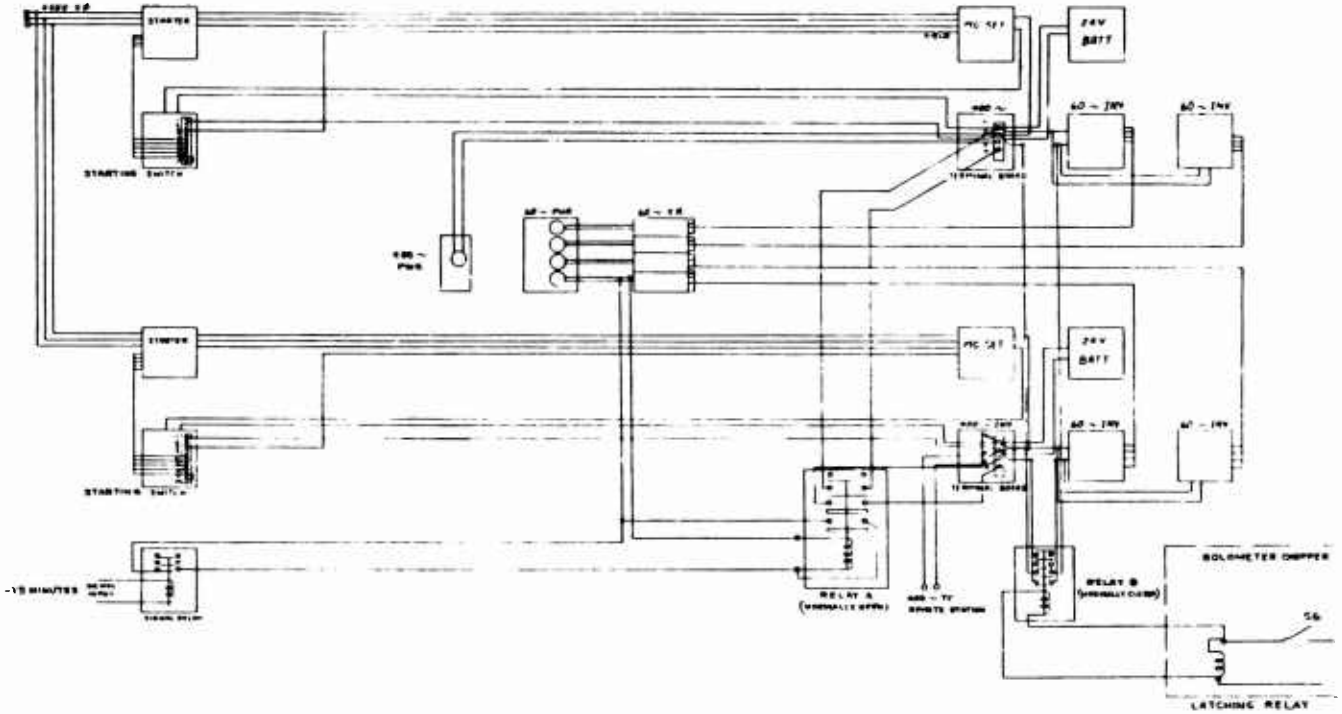

Fig. 45—Power and control for bolometer equipment at Sites C and M: Wiring diagram.

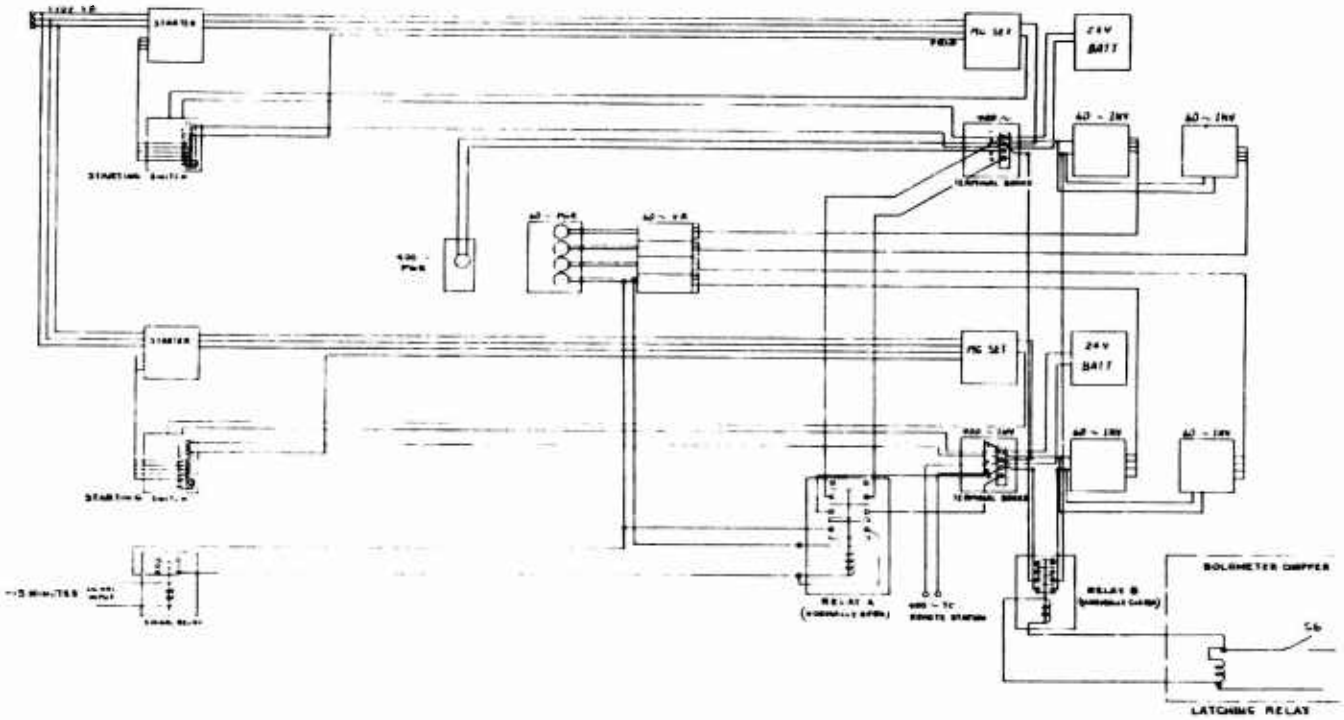

Fig. 46—Power and control for bolometer equipment at Sites E, V, E+, N, and P: Wiring diagram.

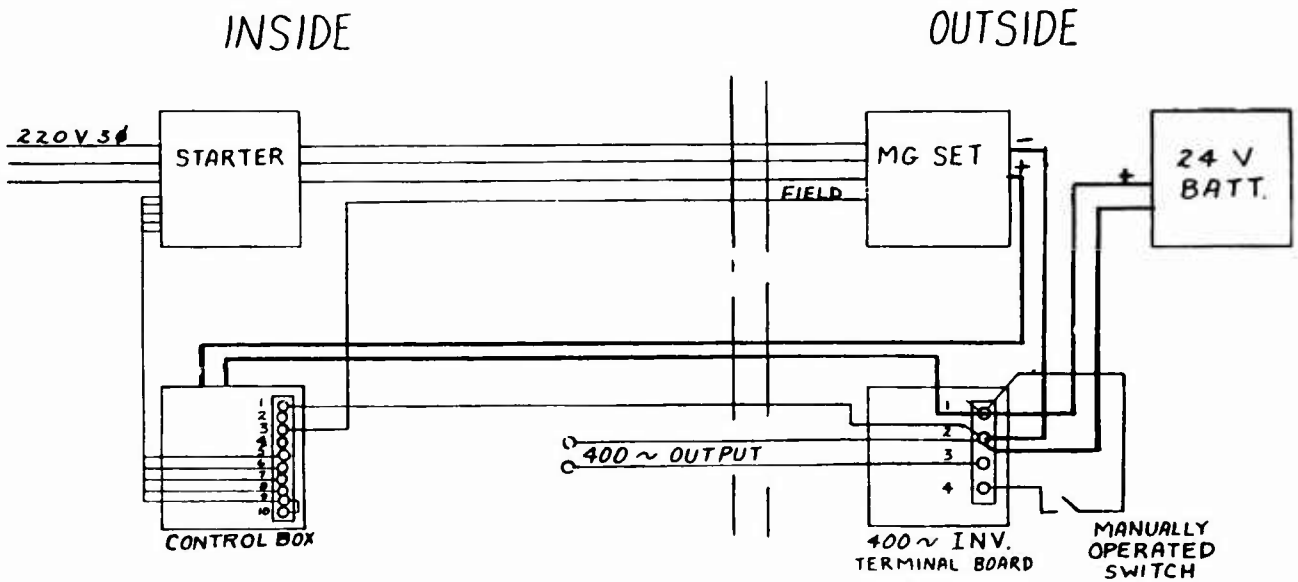

Fig. 47—Motor-generator connection.

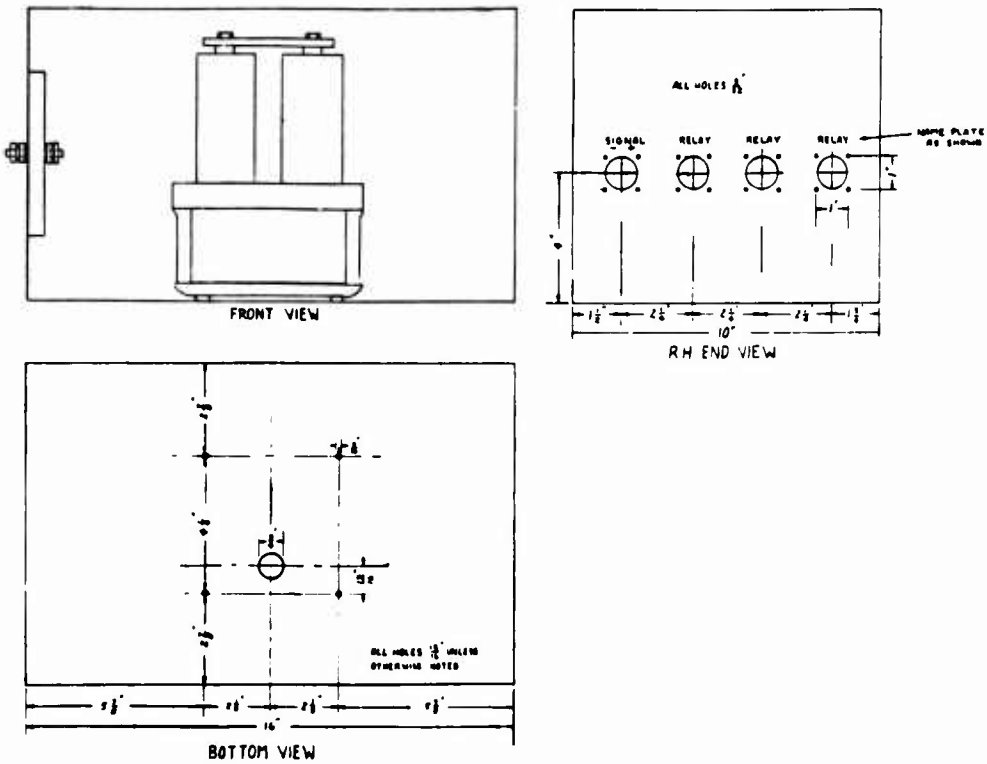

Fig. 48—Signal box.

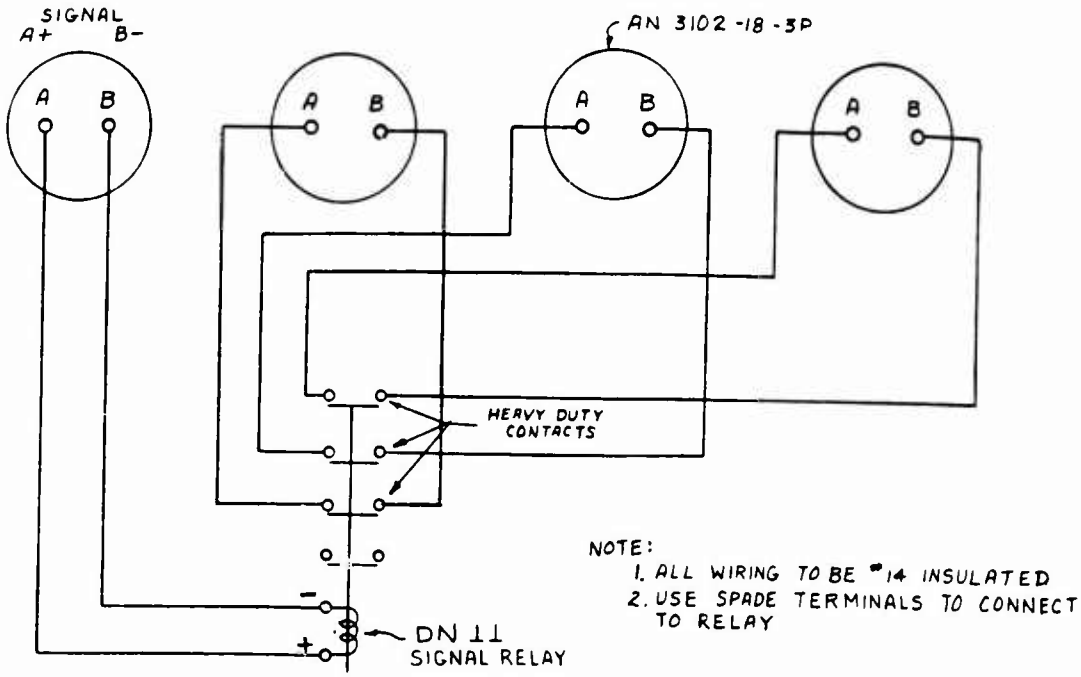

Fig. 49—Signal-box wiring diagram.

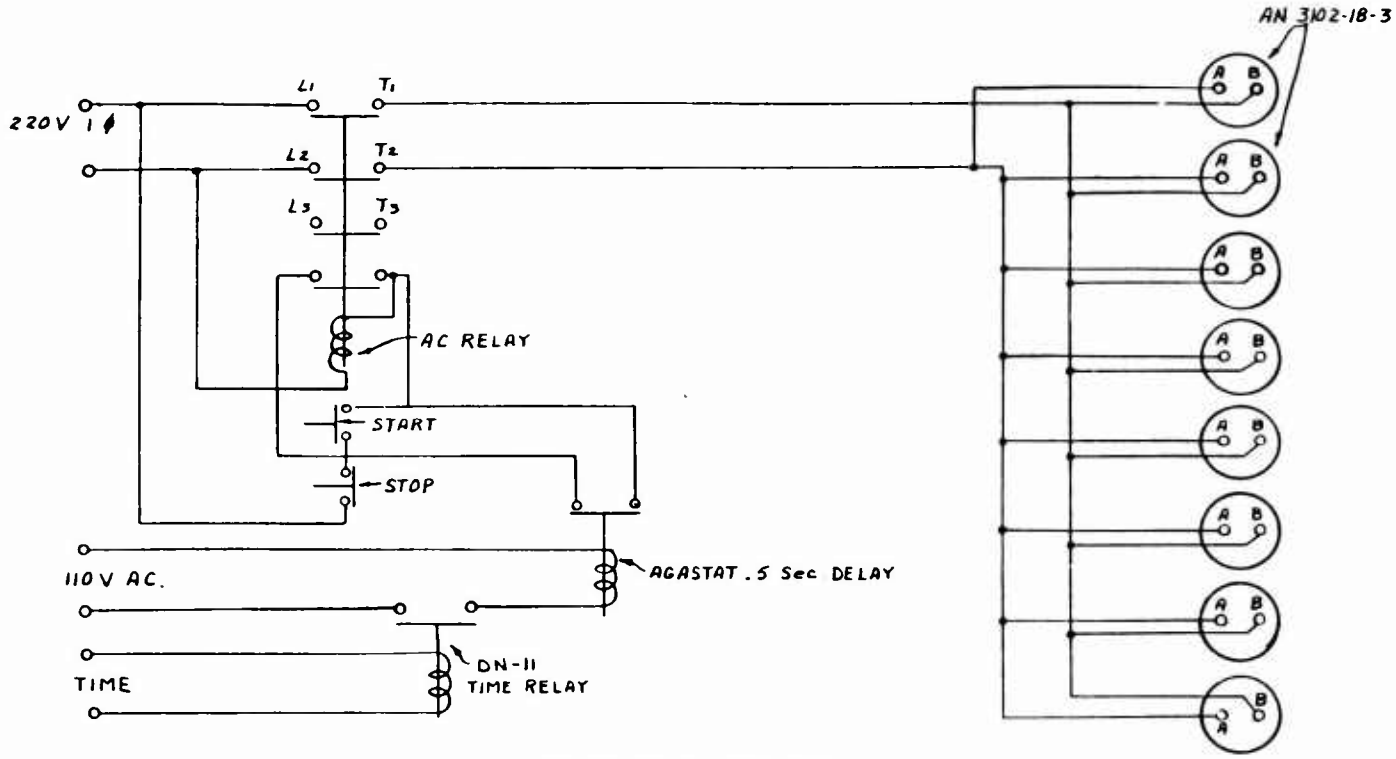

Fig. 50—Camera delay circuit.

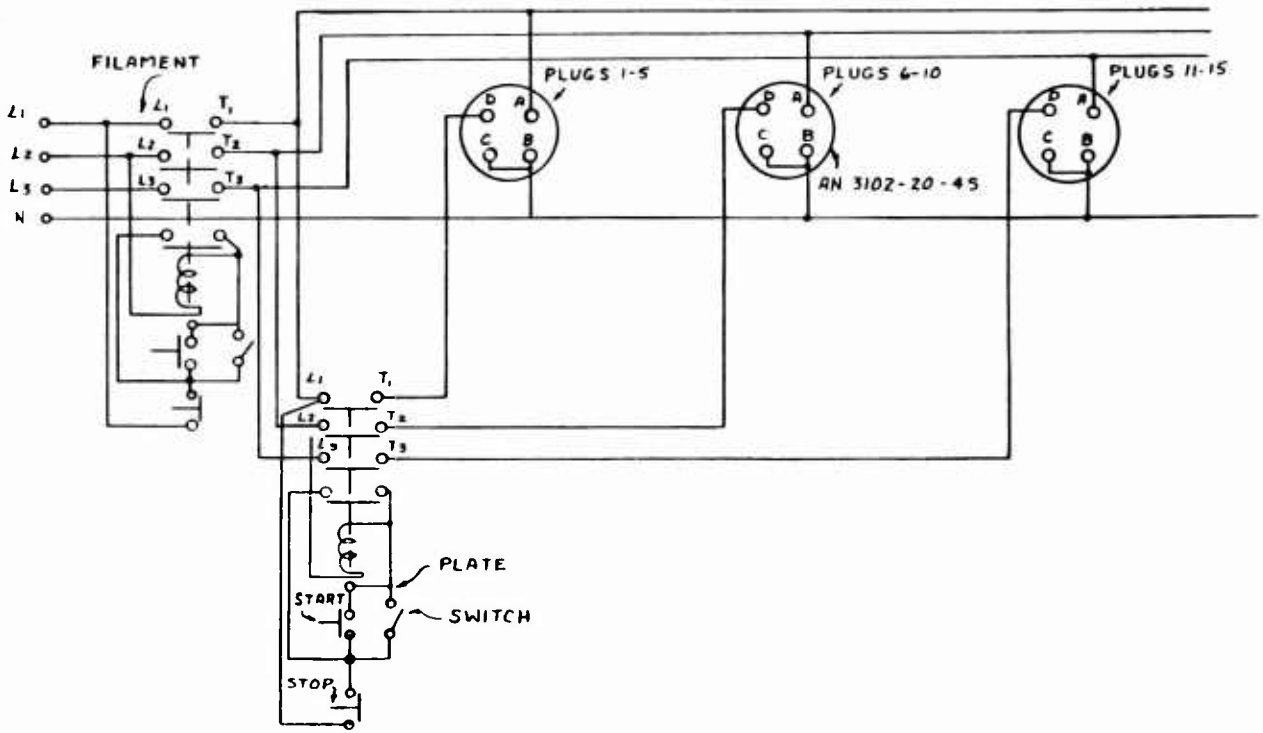

Fig. 51—Alternating-current distribution panel.

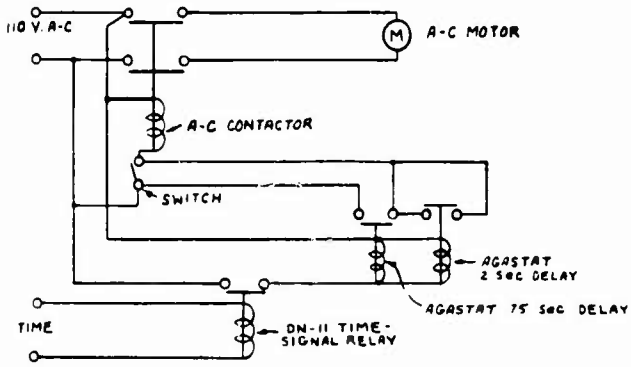

Fig. 52—High-speed spectrograph film drive.

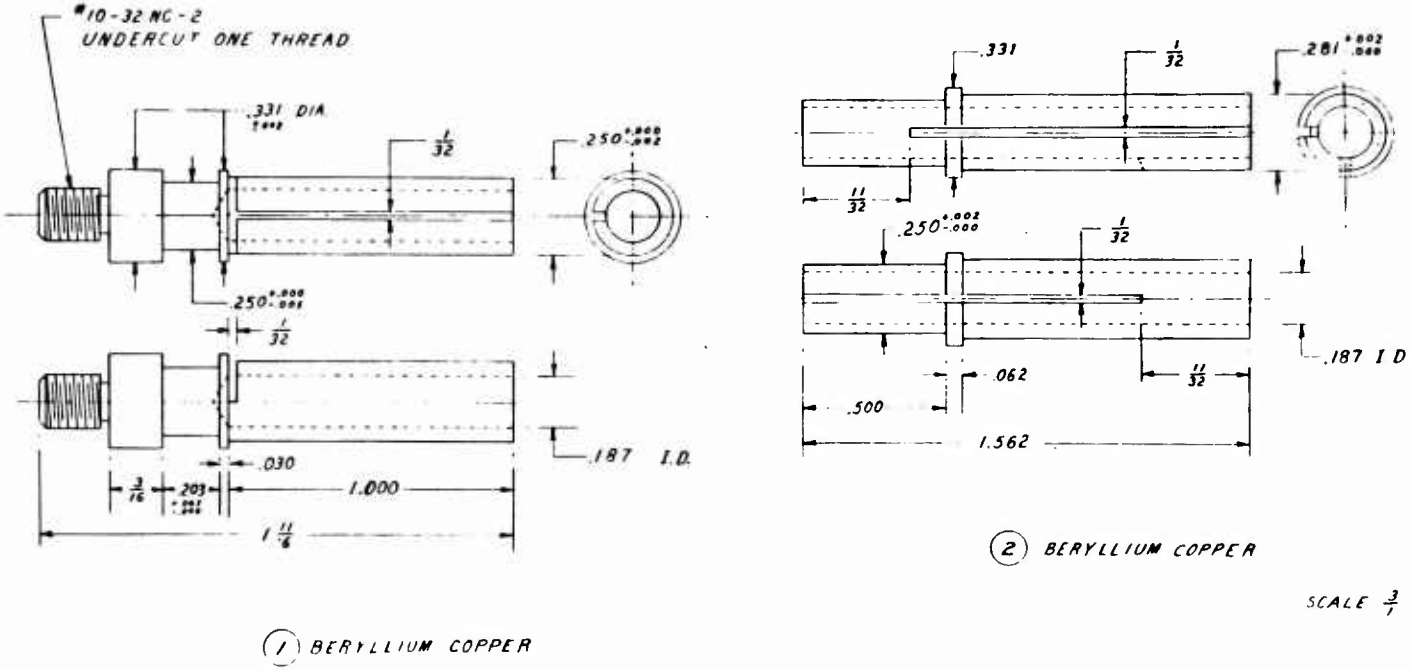

Fig. 53—Condenser-detector bullets.

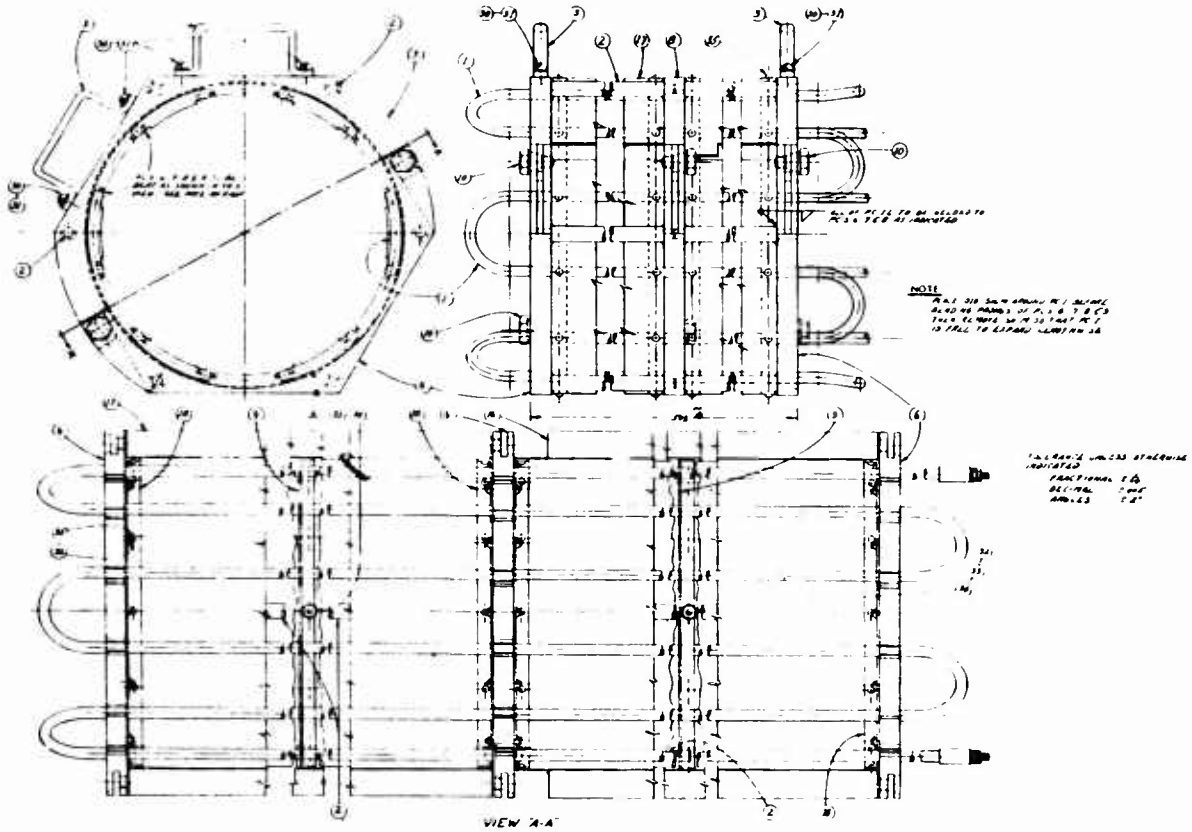

Fig. 54—Electric oven: Assembly.

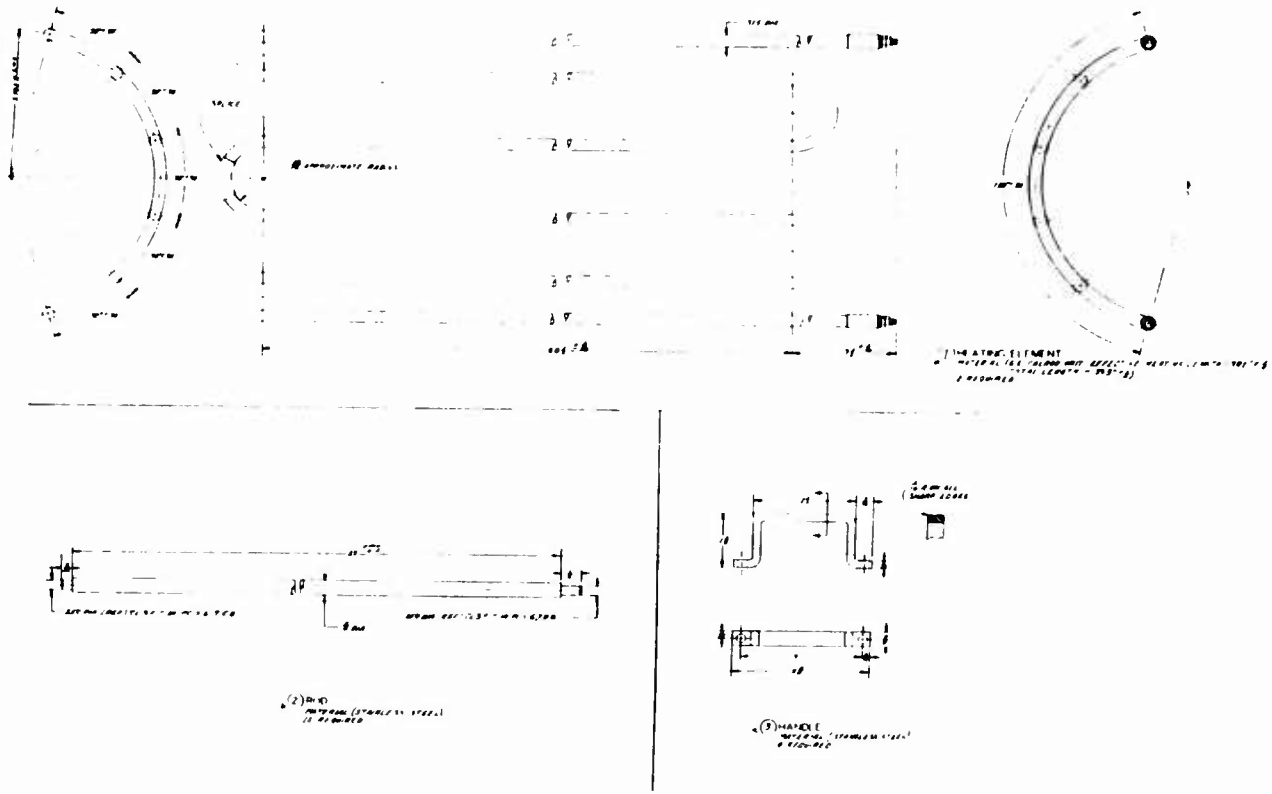

Fig. 55—Electric oven: Details, Part 1.

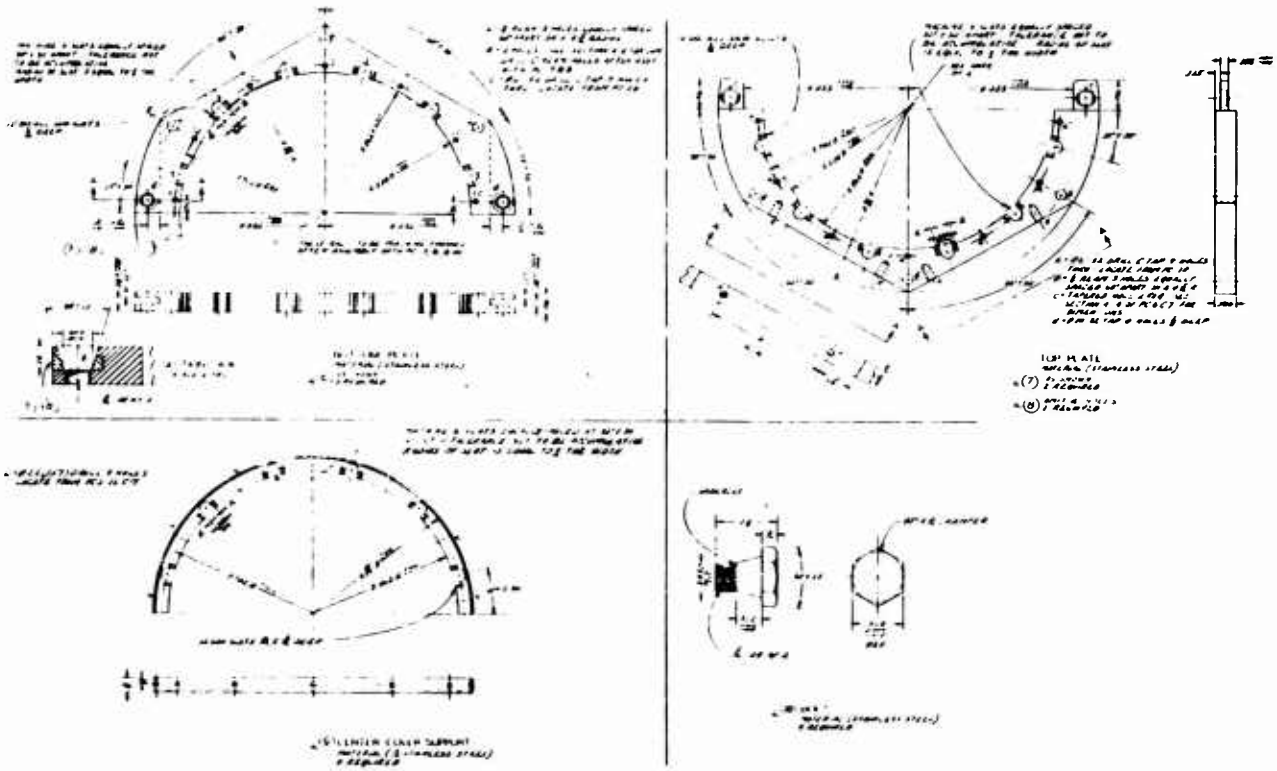

Fig. 56—Electric oven: Details, Part 2.

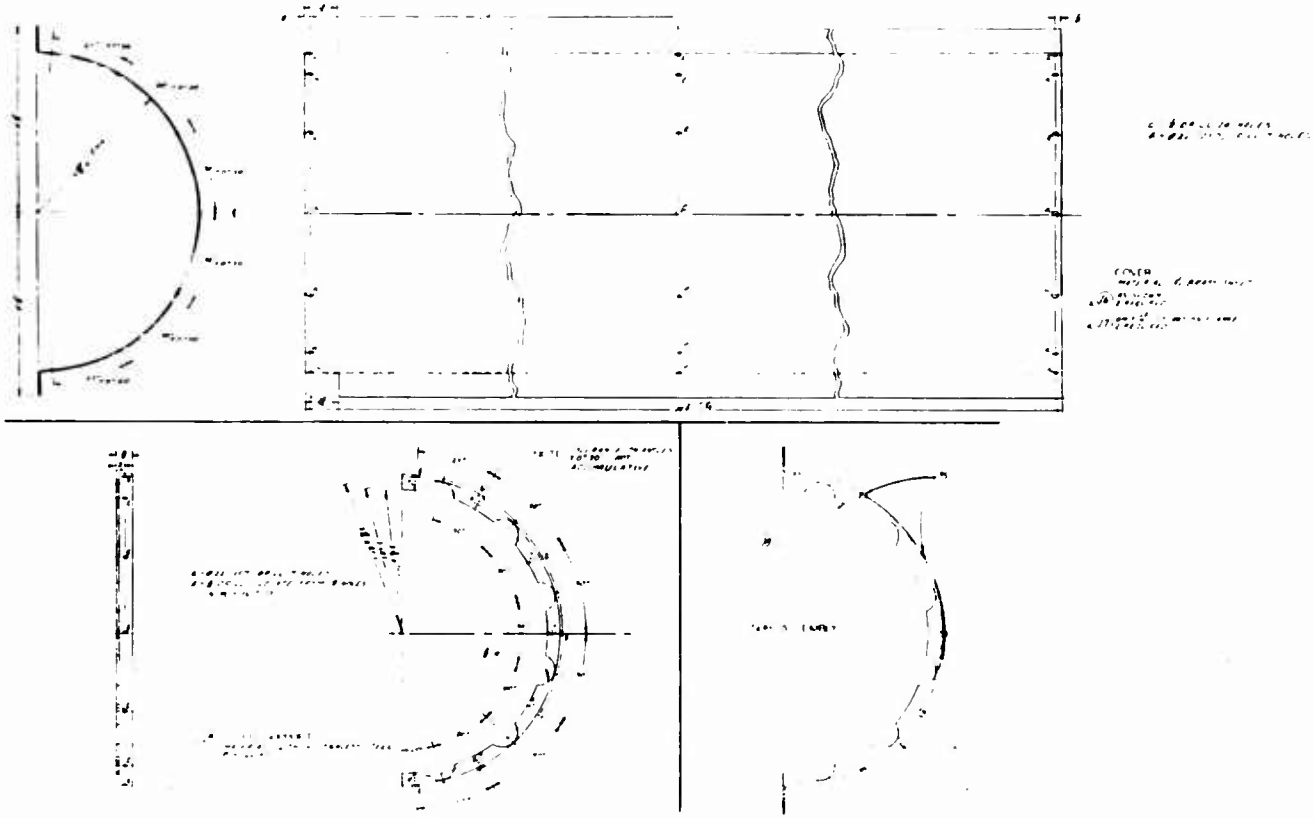

Fig. 57—Electric oven: Details, Part 3.

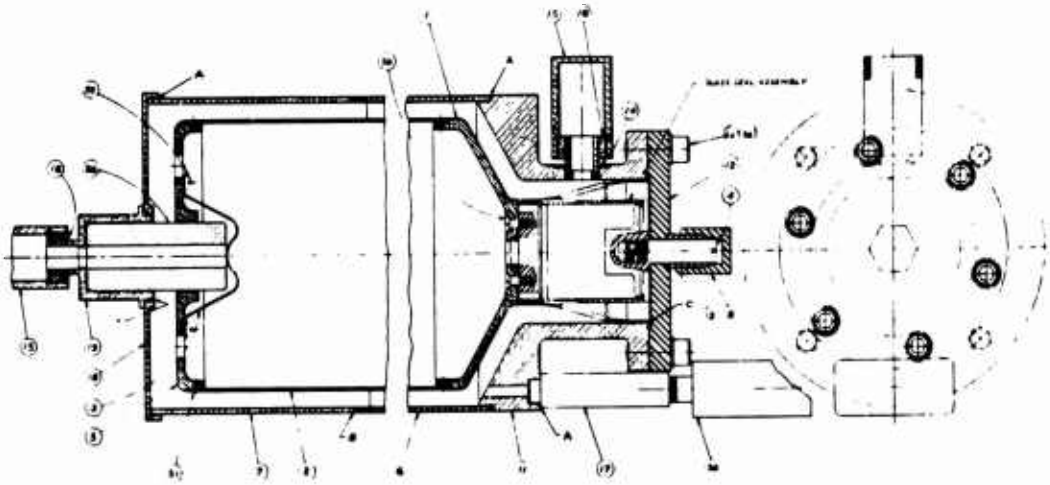

NOTE
"A" AND "B" JOINTS TO BE MADE
WITH "EASY FLO" SILVER SOLDER & HANDY WASHER FLUX.
ALL PARTS TO BE CLEANED AT HBL AFTER "A"
SOLDERED JOINTS HAVE BEEN MADE.
"B" & "F" JOINTS TO BE MADE AT HBL, AT ASSEMBLY
"C" JOINT TO BE MADE WITH ROSIN CORE SOLDER.
ALL SOLDERED JOINTS TO WITHSTAND 25 P.S.I
INTERNAL PRESSURE.

Fig. 58—Ionization chamber: Assembly.

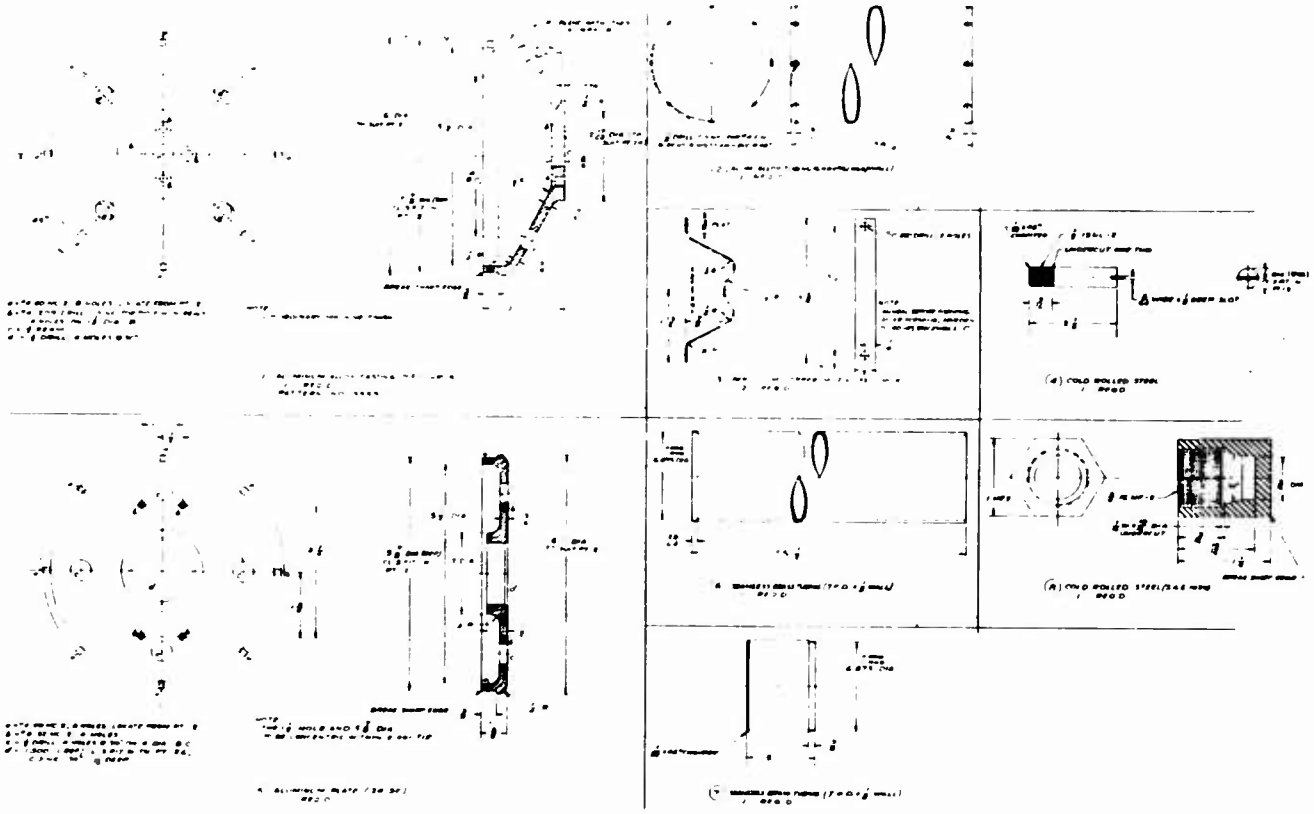

Fig. 59—Ionization chamber: Details, Part 1.

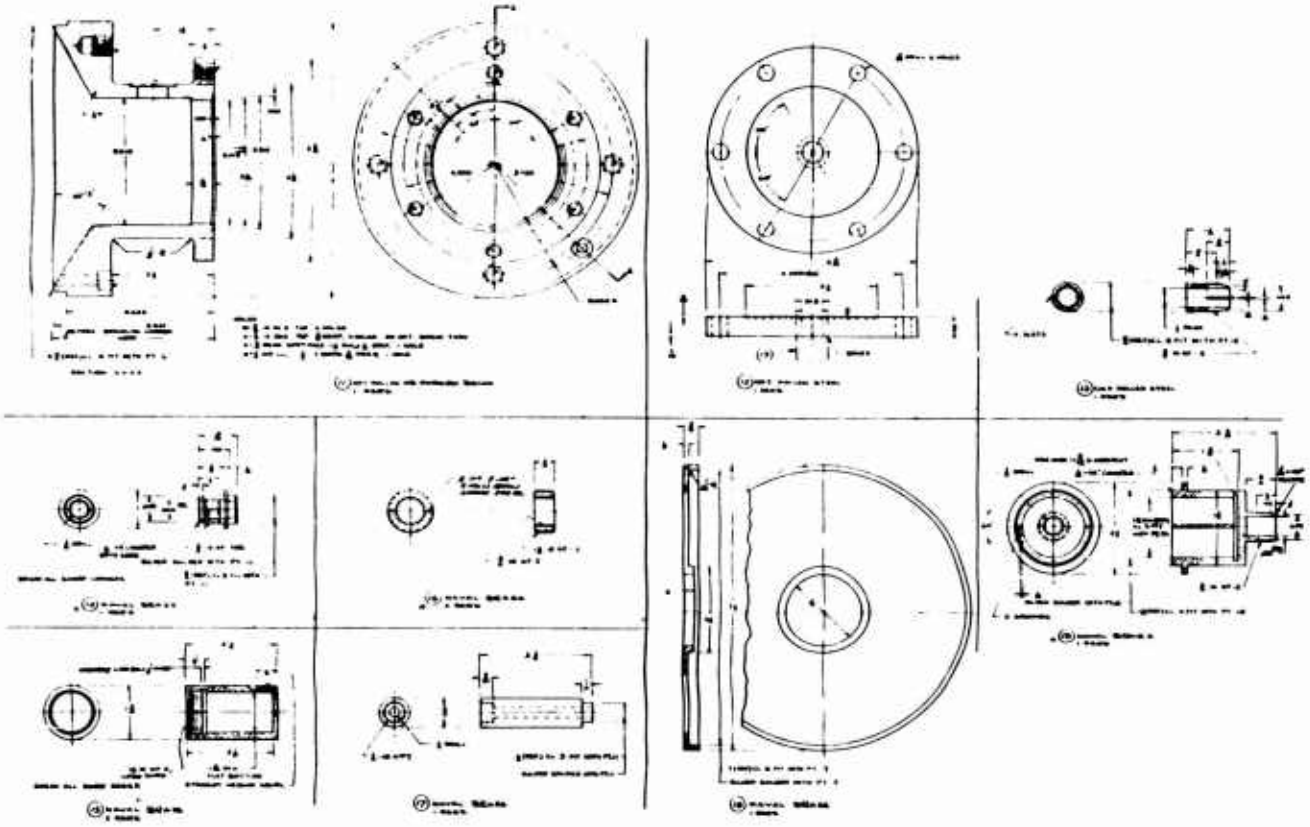

Fig. 60—Ionization chamber: Details, Part 2.

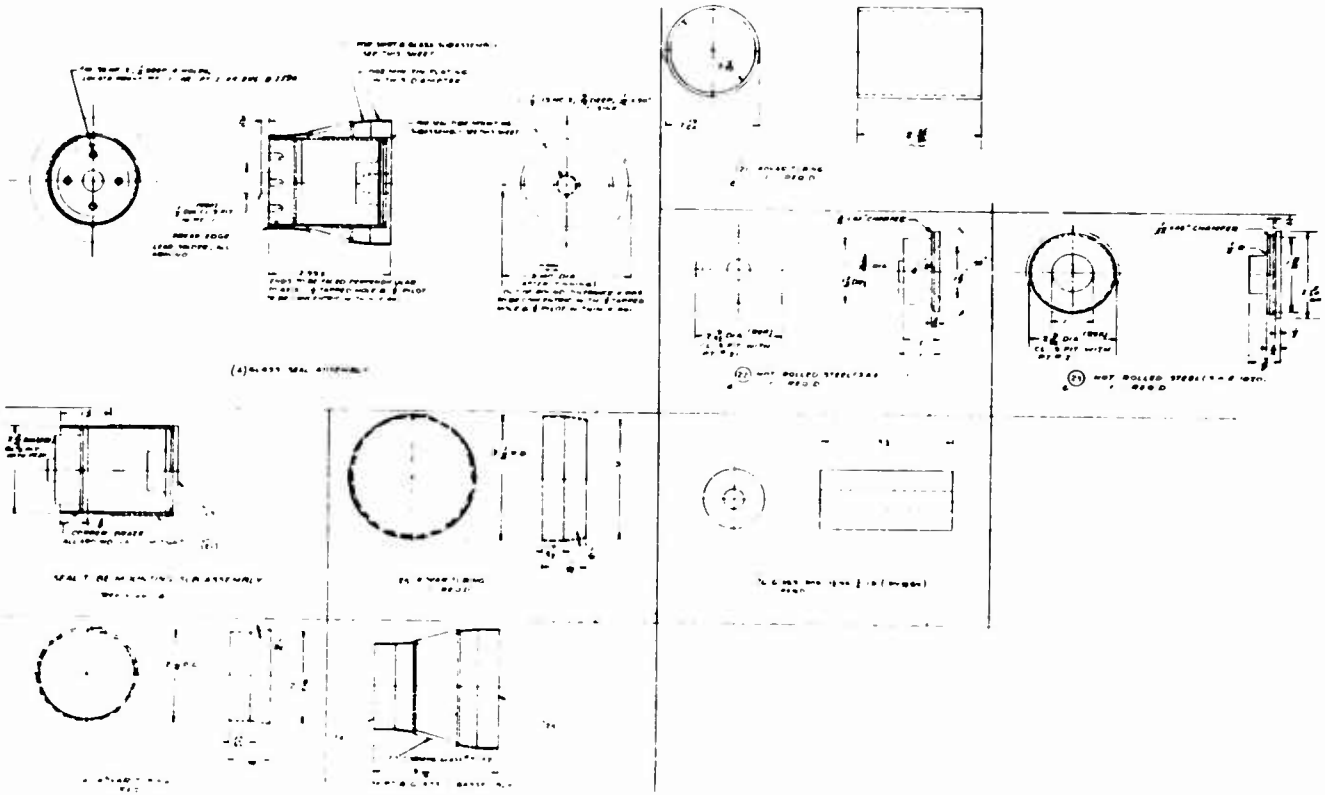

Fig. C1 — Irradiation chamber: Details, Part 3.

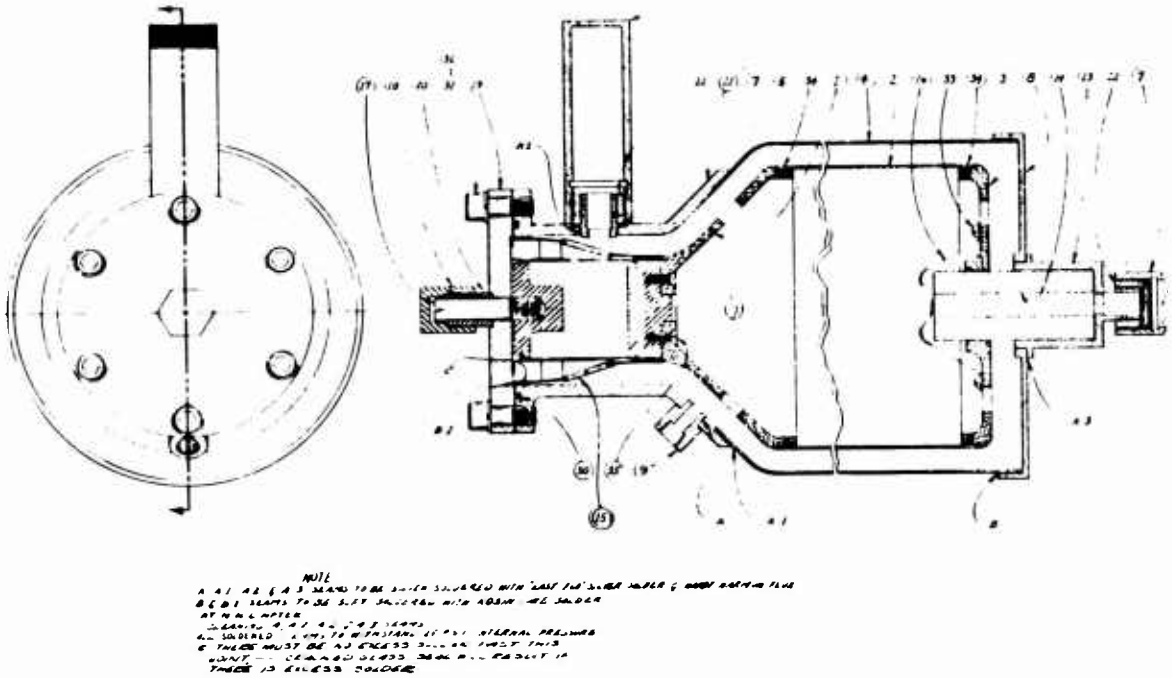

Fig. 62—Seven-ohm ionization chamber: Assembly.

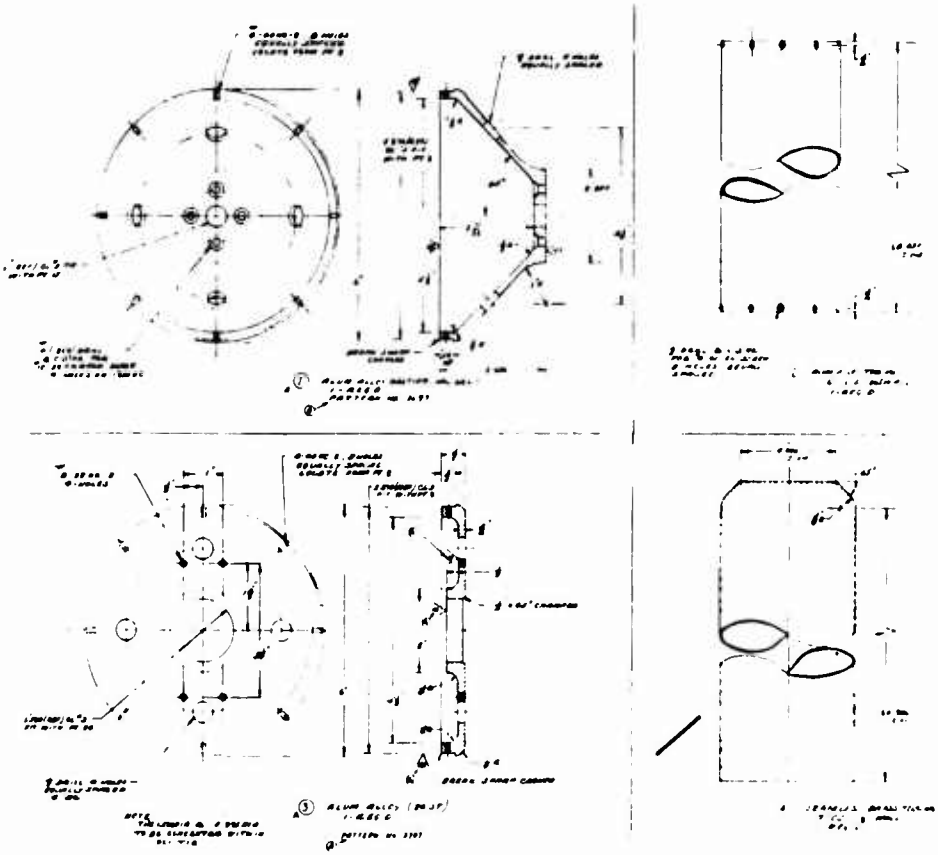

Fig. 63—Seven-ohm ionization chamber: Details, Part 1.

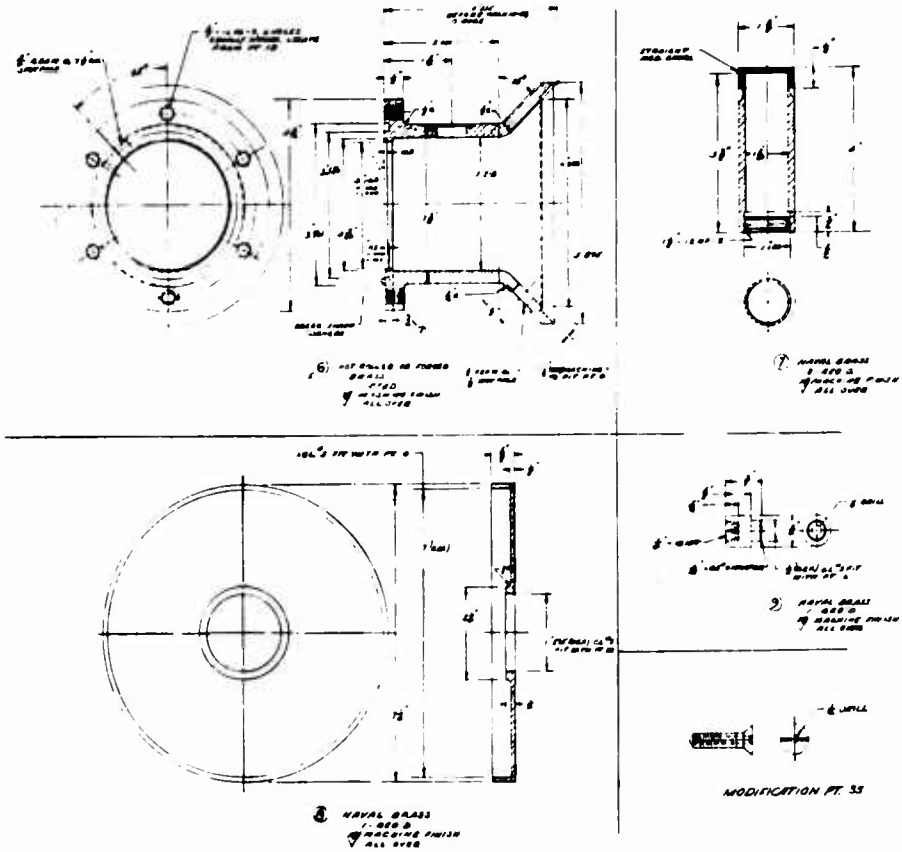

Fig. 64—Seven-ohm ionization chamber: Details, Part 2.

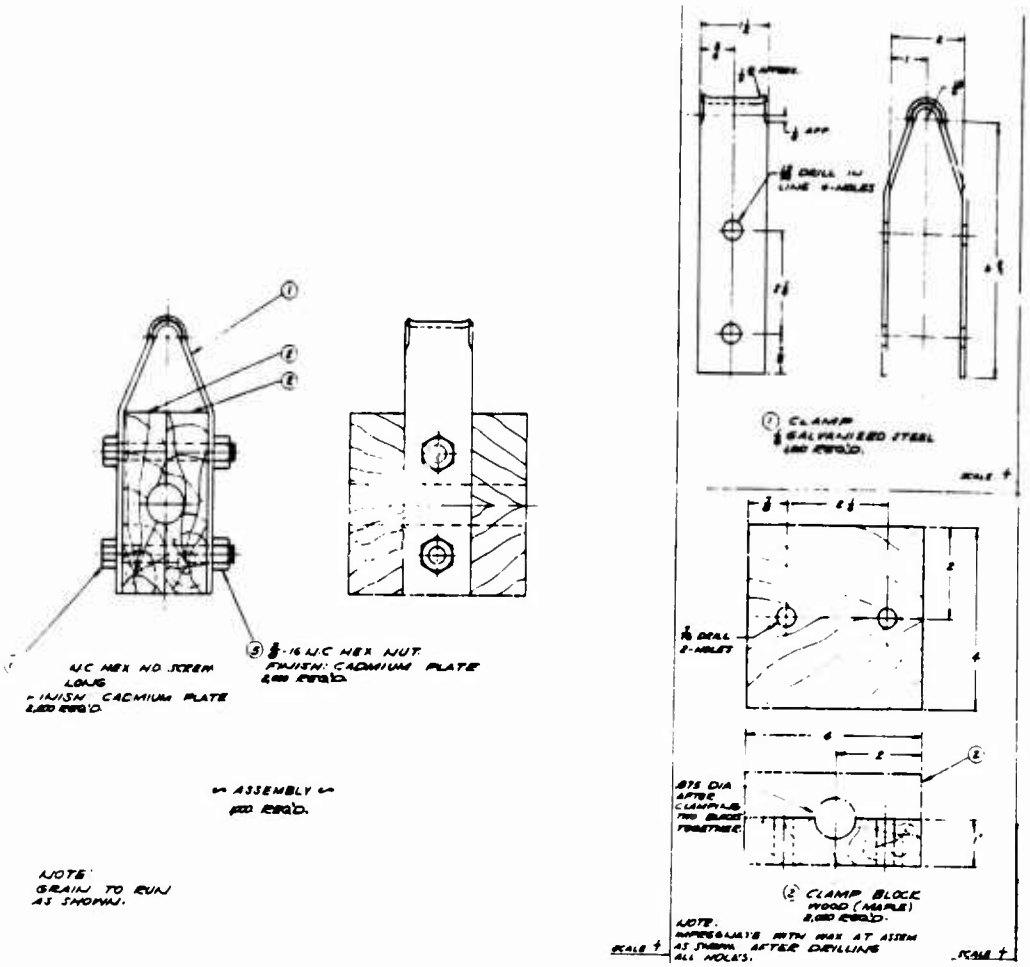

Fig. 65—Cable clamp and support for ⅛-in. line.

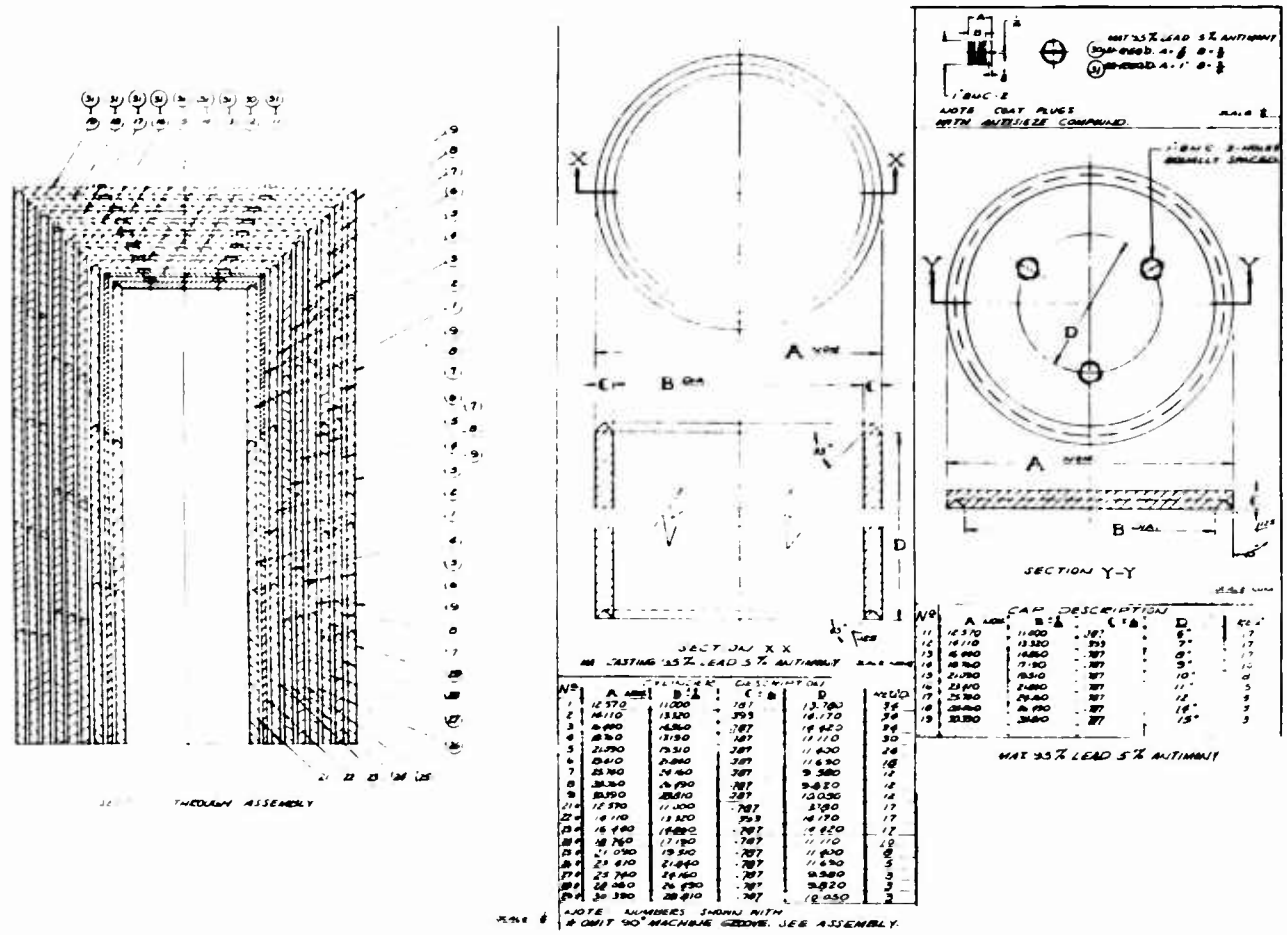

Fig. 66—Lead shield.

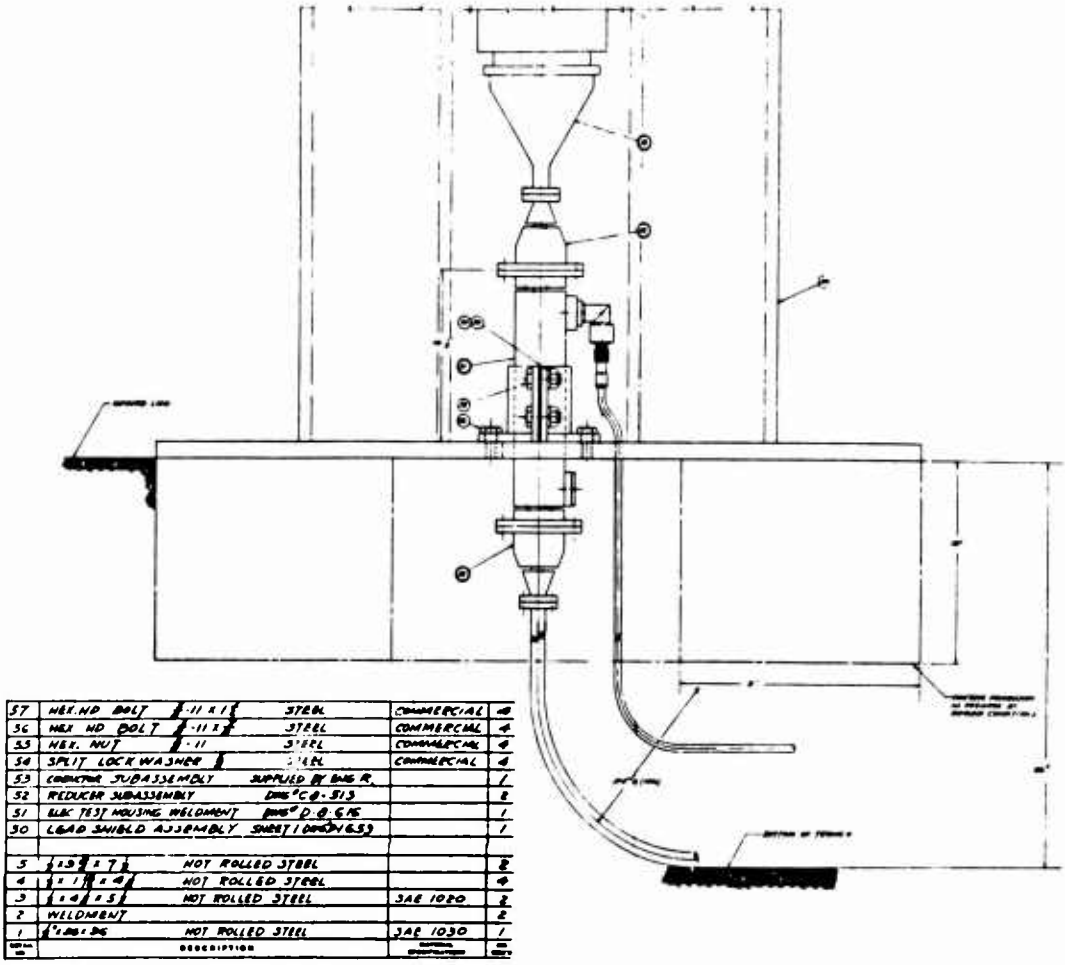

Fig. 67—Scintillation detector and condenser: Mounting assembly.

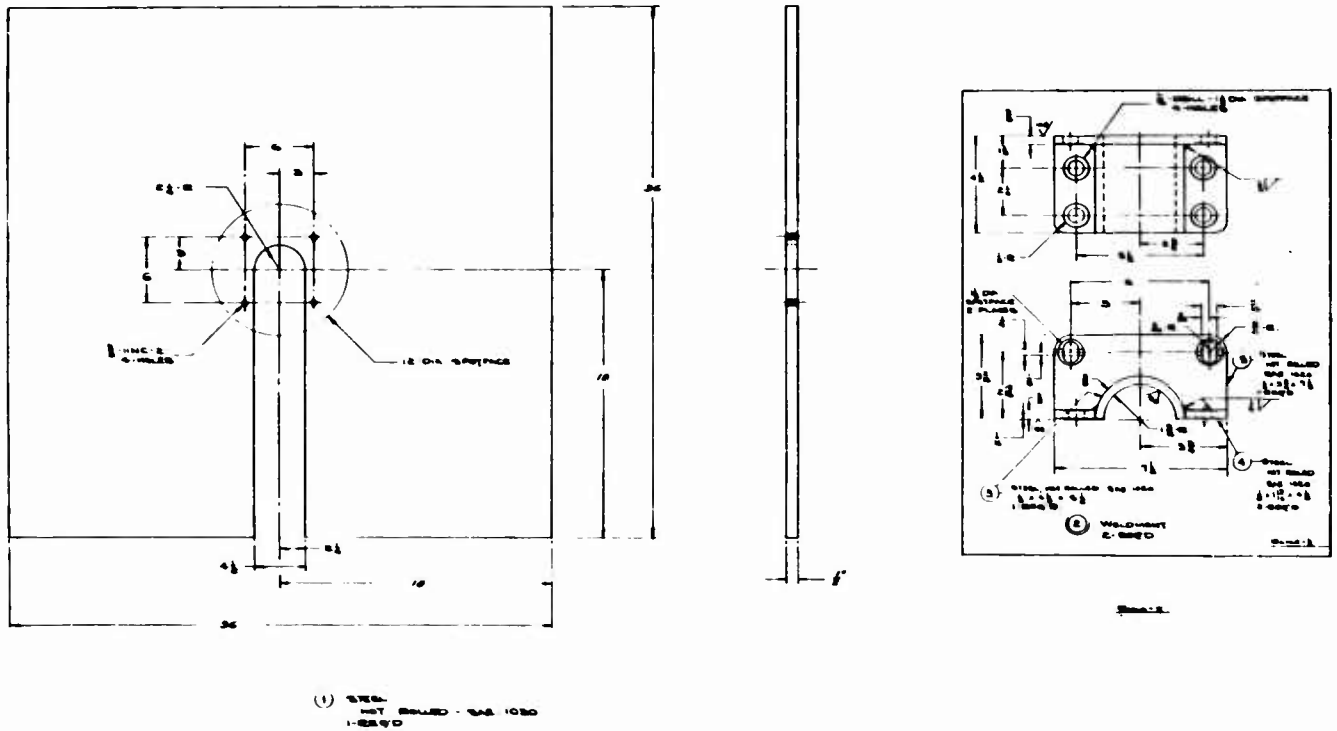

Fig. 68—Scintillation detector and condenser: Mounting details.

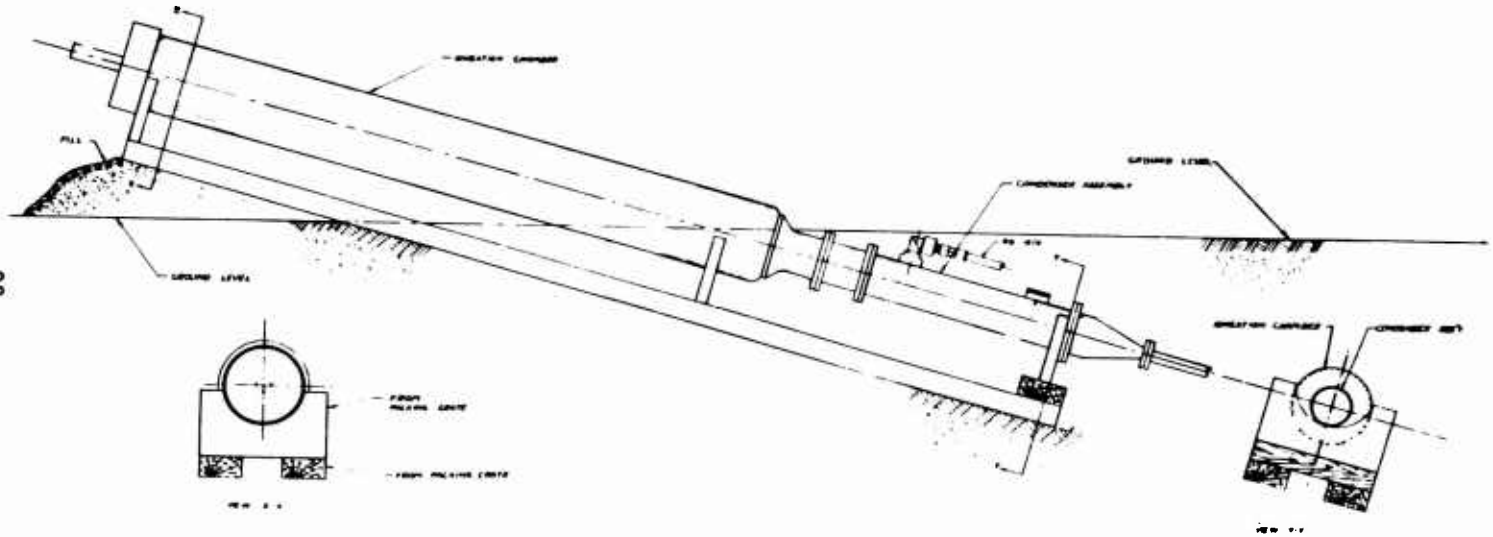

Fig. 69—Ionization chamber and condenser: Mounting assembly.

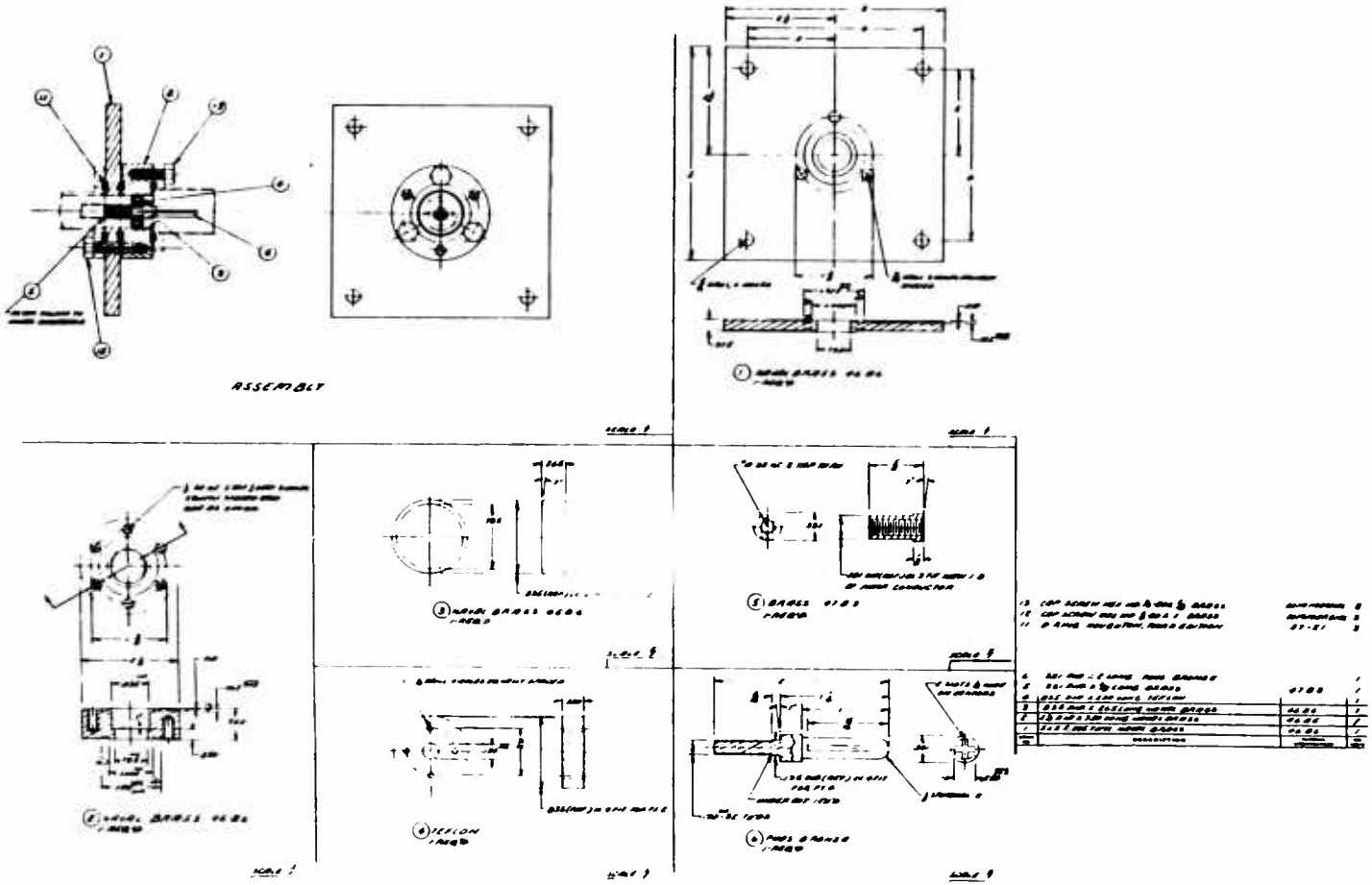

Fig. 70—Detector connector: Assembly and details.

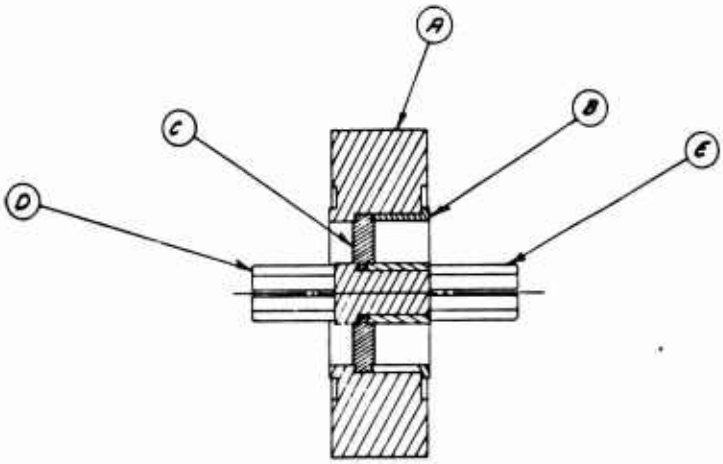

	A	B	C	D	E
3 1/8	CB-900	BB-901	BB-902	AB-903	AB-904
1 5/8	BB-905	BB-906	AB-907	AB-908	AB-909
1/8	BB-910	BB-911	AB-912	AB-941	AB-942

Fig. 71—Gas-barrier assembly.

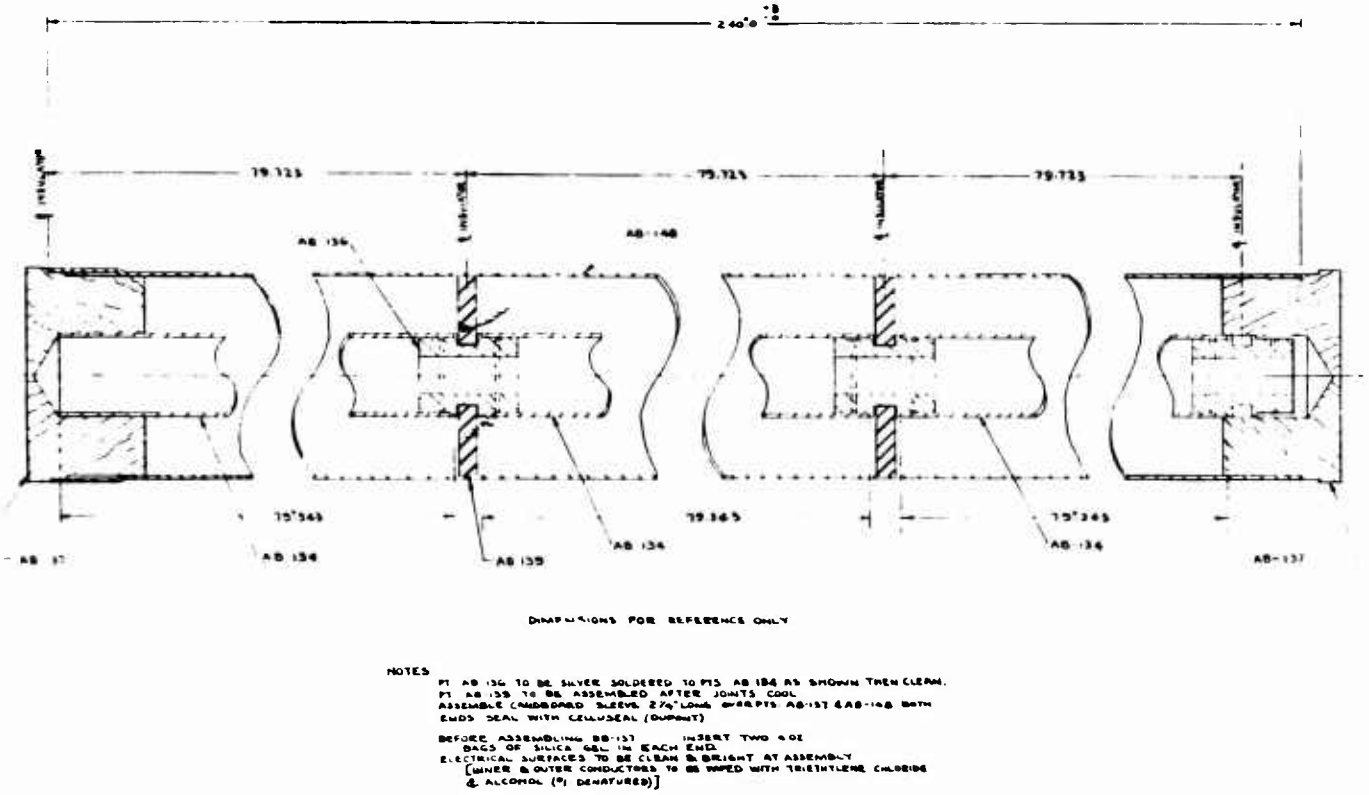

Fig. 72—Standard 20-ft section of 3⅛-in. coaxial assembly

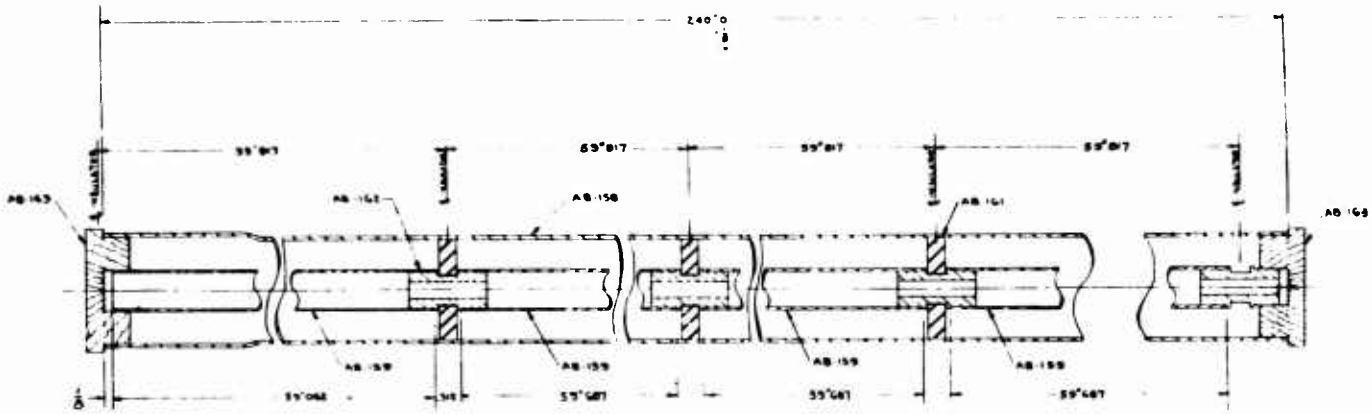

DIMENSIONS FOR REFERENCE ONLY

NOTES

PT AB-162 TO BE SILVER SOLDERED TO PTS AB-159 & 160
PT AB-161 TO BE ASSEMBLED AFTER JOINTS COOL
ELECTRICAL SURFACES TO BE CLEAN & BRIGHT AT ASSEMBLY
(INNER & OUTER CONDUCTORS TO BE WIPED WITH TRIETHYLENE CHLORIDE)
INSERT ONE 4 OZ BAG OF SILICA GEL IN EACH END OF TUBE
PTS AB-163 & 164 TO BE TAPED ON ENDS OF AB-158 &
CELLULOSE ACETATE BUTERATE LADLED OVER ENDS FOR SEALING PURPOSES

Fig. 73—Standard 20-ft section of 1⅝-in. coaxial assembly.

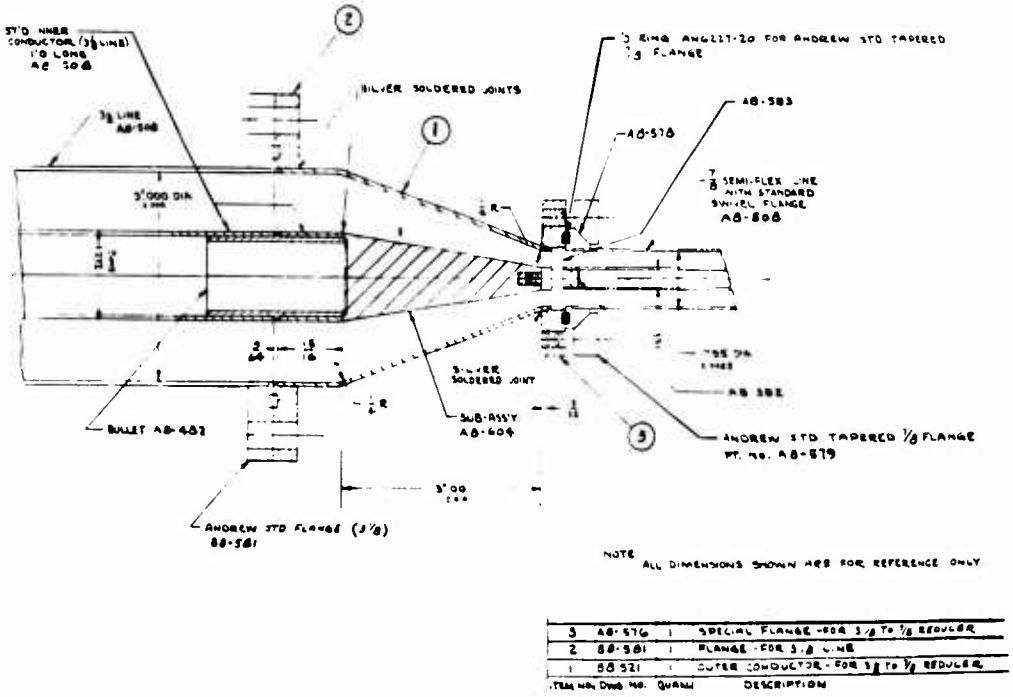

Fig. 74—Coaxial reducer from $3\frac{1}{8}$- to $\frac{7}{8}$-in.

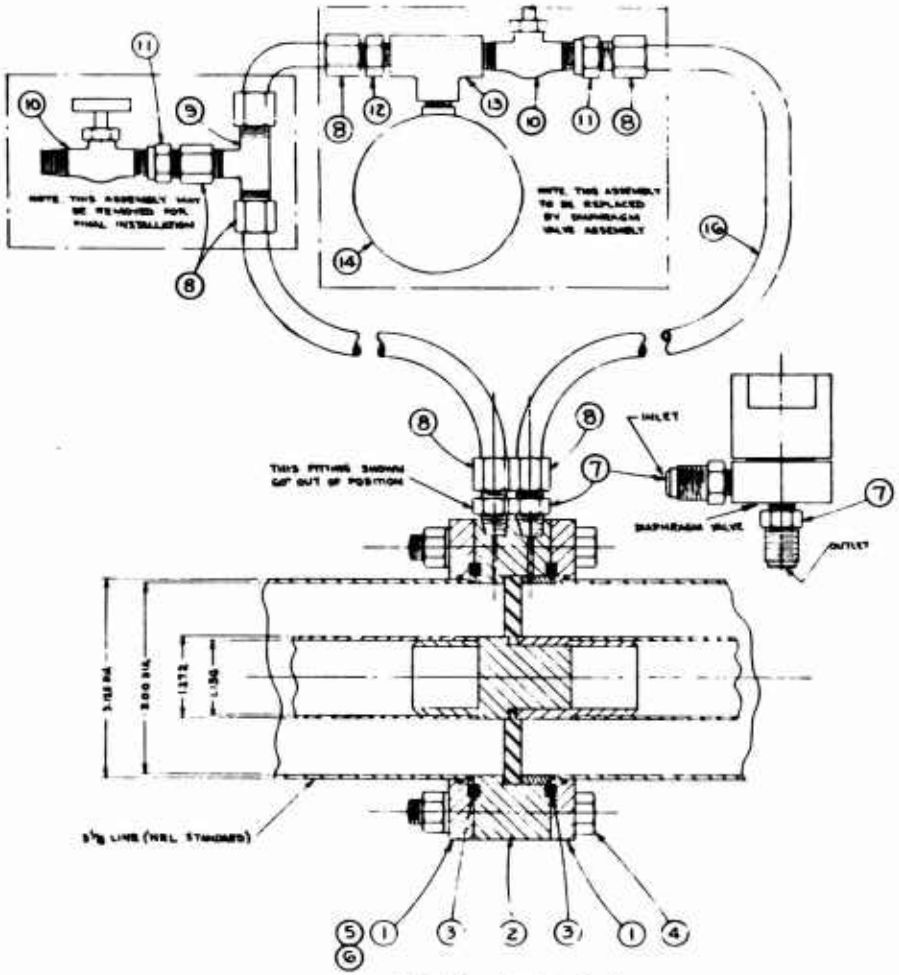

ITEM	DESCRIPTION	NO REQ'D
1	3 1/8 FLANGE (OMIN FROM RMA ST'D)	2
2	GAS BARRIER (C P) SPECIAL NOT NRL LINE	1
3	'O' RING (AN-6227-43)	2
4	3/8 BOLT 2 1/2" LONG	6
5	3/8 NUT	6
6	3/8 LOCKWASHER	6
7	1/8 MPS TO 3/8 COPPER TUBE FITTING	4
8	3/8 FLARE NUT	7
9	3/8 COPPER TUBE TEE	1
10	HOKE VALVE - 1/4 IPS	2
11	1/4 FEMALE IPS TO 3/8 C.T.	2
12	1/4 IPS TO 3/8 C.T.	1
13	1/4 PIPE TEE	1
14	PRESSURE GAGE (0-30LBS) 1/4 IPS	1
15	DIAPHRAGM VALVE (VRL AS-6[illegible])	1
16	3/8 COPPER TUBING	6 FT

Fig. 75 — Gas-barrier bypass.

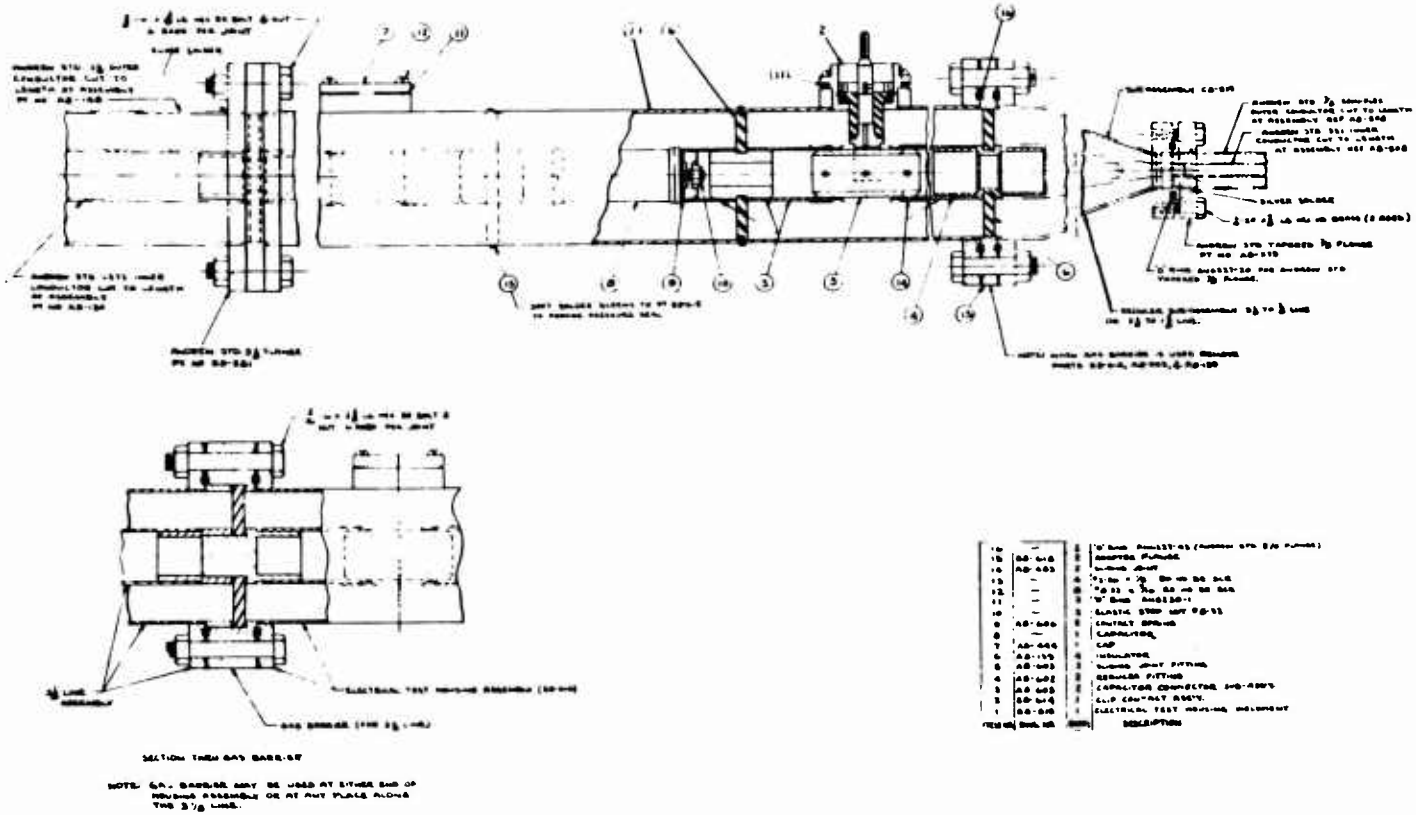

Fig. 76—Electrical-test assembly in detector-condenser housing.