AD-A955 268

DTIC ACCESSION NUMBER

PHOTOGRAPH THIS SHEET

LEVEL

INVENTORY

1

Rept No 27-771-92

DOCUMENT IDENTIFICATION

MAY 76

App. B

This document has been approved for public release and sale; its distribution is unlimited.

DISTRIBUTION STATEMENT

ACCESSION FOR		
NTIS	GRA&I	☒
DTIC	TAB	☐
UNANNOUNCED		☐
JUSTIFICATION		
BY		
DISTRIBUTION /		
AVAILABILITY CODES		
DIST	AVAIL AND/OR SPECIAL	
A-1	25	

DISTRIBUTION STAMP

UNANNOUNCED

DTIC ELECTE JUL 27 1987 S D E

DATE ACCESSIONED

QUALITY INSPECTED 4

DATE RETURNED

87 6 30 242

DATE RECEIVED IN DTIC

REGISTERED OR CERTIFIED NO.

PHOTOGRAPH THIS SHEET AND RETURN TO DTIC-FDAC

DTIC FORM 70A MAR 86

DOCUMENT PROCESSING SHEET

PREVIOUS EDITION MAY BE USED UNTIL STOCK IS EXHAUSTED.

AD-A955 268

Unclassified
SECURITY CLASSIFICATION OF THIS PAGE

REPORT DOCUMENTATION PAGE

1a. REPORT SECURITY CLASSIFICATION
Unclassified

1b. RESTRICTIVE MARKINGS

2a. SECURITY CLASSIFICATION AUTHORITY

3. DISTRIBUTION AVAILABILITY OF REP
Distribution unlimited.

2b. DECLASSIFICATION/DOWNGRADING SCHEDULE

4. PERFORMING ORGANIZATION REPORT #
27-771-92

5. MONITORING ORGANIZATION REPORT #
FPO 7601, Appendix B

6a. NAME OF PERFORM. ORG.
Crest Engineering, Inc.

6b. OFFICE SYM

7a. NAME OF MONITORING ORGANIZATIO
Ocean Engineering &
Construction Project Office
CHESNAVFACENGCOM

6c. ADDRESS (City, State & Zip)
Tulsa, OK

7b. ADDRESS (City, State, & Zip)
Bldg. 212, Washington Navy Yard
Washington, DC 20374-2121

8a. NAME OF FUNDING ORG.

8b. OFFICE SYM

9. PROCUREMENT INSTRUMENT INDENT #
N62477-76-C-0179

8c. ADDRESS (City, State &Zip)

10. SOURCE OF FUNDING NUMBERS

PROGRAM ELEMENT #	PROJECT #	TASK #	WORK UNIT ACCESS #

11. TITLE (Including Security Classification)
Structural concept analysis report for the East Coast Air Combat Maneuvering Range Offshore Kitty Hawk, North Carolina Ap. B four pile concept calculation

12. PERSONAL AUTHOR(S)

13a. TYPE OF REPORT

13b. TIME COVERED
FROM TO

14. DATE OF REP (yymmdd)
76-05

15. PAGES
254

16. SUPPLEMENTARY NOTATION

17. COSATI CODES

FIELD	GROUP	SUP-GROUP

18. SUBJECT TERMS (Continue on Reverse if nec)
Construction, East Coast Air Combat Maneuvering Range, North Carolina, Kitty Hawk, NC; Structura analysis

19. ABSTRACT (Continue on reverse if necessary & identify by block number)
This report is a study of four-pile templet type offshore structure. It constitutes a portion of the total project report on the structural concept analysis of an ocean structure for the U.S. Navy Air Combat Maneuvering Range (ACMR) offshore North Carolina, U.S.A. (con't)

20. DISTRIBUTION/AVAILABILITY OF ABSTRACT
same as report

ABSTRACT SECURITY CLASSIFICATION

22a. NAME OF RESPONSIBLE INDIVIDUAL
Jacqueline B. Riley

22b. TELEPHONE
202-433-3881

22c. OFFICE SYMBOL

DD FORM 1473, 84MAR

SECURITY CLASSIFICATION OF THIS PAGE

BLOCK 19 (con't)

The objective of this report is to establish the most efficient four-pile ocean structure under the environmental loading conditions given. The conditions are the same as those used in the previous design of skirt-pile structures.

The four-pile structure is similar to standard templet type structures used by the oil industry. It has four similar faces with equally spaced jacket legs battered at a true slope of 1 to 7. The structure is to be designed for a water depth of 84 feet (MLW). The anchoring of the structure is to be achieved by driving piles through the jacket legs into the seabed. Securing of the jacket is then accomplished by welding of shim plates along the annulus between the jacket leg and piling at the top of the jacket legs. A superstructure consisting of an equipment deck and a top deck will be installed to the piling above the jacket. A boatlanding is to be furnished with the jacket. A set of stairways attached to the superstructure shall be furnished to provide connections among the boatlanding, equipment deck and the top deck.

FPO 7601 APP B

STRUCTURAL CONCEPT ANALYSIS REPORT

FOR THE Ling

EAST COAST AIR COMBAT MANEUVERING RANGE

OFFSHORE KITTY HAWK, NORTH CAROLINA

CONTRACT NO. N62477-76-C-0179

REPORT NO. 27-771-92

APPENDIX B. FOUR-PILE CONCEPT CALCULATIONS

Prepared for

NAVAL FACILITIES ENGINEERING COMMAND
DEPARTMENT OF THE NAVY
CHESAPEAK DIVISION

By

CREST ENGINEERING, INC.
TULSA, OKLAHOMA

May 1976

TABLE OF CONTENTS

SECTION	TITLE	PAGE
1.0	INTRODUCTION	
	1.1 Introduction	1.01
	1.2 Design Criteria	1.02
	1.3 Design Assumptions	1.05
	1.4 Procedures of Analysis	1.06
	1.5 Design Summary	1.07
	1.6 Personnel Resumes	1.09
2.0	GRID WAVE DATA	
	2.1 Introduction	2.01
	2.2 Wave Pressures	2.02
	2.3 SEALOAD Results	2.06
	2.4 Wave Check	2.12
3.0	BASE SPACING vs. PILING CAPACITY	
	3.1 Introduction	3.01
	3.2 Loading on Structure	3.02
	3.3 Graph - Pile Capacity to Base Spacing	3.07
4.0	STRUCTURAL STEEL WEIGHT VARIATION	
	4.1 Introduction	4.01
	4.2 Jacket Bracing Lengths	4.03
	4.3 Jacket Leg	4.08
	4.4 Piling	4.09
	4.5 Total Weignt of Structure	4.13
5.0	STRUCTURAL CONFIGURATION	
	5.1 Introduction	5.01
	5.2 Jacket	5.02
	5.3 Superstructure	5.08
	5.4 Deck Layouts	5.09
6.0	50 FT JACKET BASE SPACING	
	6.1 Introduction	6.01
	6.2 Idealized Structure	6.02

TABLE OF CONTENTS (continued)

SECTION	TITLE	PAGE
	6.3 Wind and Wave Directions	6.15
	6.4 SEALOAD Computer Run	6.16
7.0	60 FT JACKET BASE SPACING	
	7.1 Introduction	7.01
	7.2 Idealized Structure	7.02
	7.3 Wind and Wave Direction	7.09
	7.4 SEALOAD Results	7.10
8.0	BOATLANDING	
	8.1 Introduction	8.01
	8.2 Idealized Structure	8.02
	8.3 SEALOAD Results	8.03
9.0	STAIRWAY	
	9.1 Introduction	9.01
	9.2 Idealized Structure	9.02
	9.3 SEALOAD Results	9.03
10.0	LATERALLY LOADED PILE CAPACITY	
	10.1 Introduction	10.01
	10.2 Data Preparation	10.02
	10.3 Pile Design	10.07
	10.4 Laterally Loaded Pile Results	10.11
	10.5 Equivalent Pile Properties	10.12
11.0	LOADINGS	
	11.1 Introduction	11.01
	11.2 Data Preparation	11.02
	11.3 Loadings	11.03
12.0	SPACE FRAME ANALYSIS	
	12.1 Introduction	12.01
	12.2 Deflections	12.02

TABLE OF CONTENTS (continued)

SECTION	TITLE	PAGE
	12.3 Unity Check	12.03
	12.4 Overstressed Members	12.04
	12.5 Final Structure Configuration	12.07
13.0	CORROSION PROTECTION AND STRUCTURAL STEEL WEIGHT	
	13.1 Introduction	13.01
	13.2 Areas to Consider	13.02
	13.3 Member Length	13.03
	13.4 Area and Weight Takeoffs	13.07
	13.5 Painting and Anodes	13.15
	13.6 Weight Totals	13.16
	EXHIBIT A	
	Laterally Loaded Pile Capacity	
	EXHIBIT B	
	STRAN - Space Fram Analysis	

SECTION 1

INTRODUCTION

1.1 INTRODUCTION

This report is a study of a four-pile templet type offshore structure. It constitutes a portion of the total project report on the structural concept analysis of an ocean structure for the U.S. Navy Air Combat Maneuvering Range (ACMR) offshore North Carolina, U.S.A.

The objective of this report is to establish the most efficient four-pile ocean structure under the environmental loading conditions given. The conditions are the same as those used in the previous design of skirt-pile structures.

The four-pile structure is similar to standard templet type structures used by the oil industry. It has four similar faces with equally spaced jacket legs battered at a true slope of 1 to 7. The structure is to be designed for a water depth of 84 feet (MLW). The anchoring of the structure is to be achieved by driving piles through the jacket legs into the seabed. Securing of the jacket is then accomplished by welding of shim plates along the annulus between the jacket leg and piling at the top of the jacket legs. A superstructure consisting of an equipment deck and a top deck will be installed to the piling above the jacket. A boatlanding is to be furnished with the jacket. A set of stairways attached to the superstructure shall be furnished to provide connections among the boatlanding, equipment deck and the top deck.

1.2 DESIGN CRITERIA

Design criteria presented herein serve as guide lines in the conceptual development of the proposed four-pile structure. These criteria are listed as follows:

A. Environmental Criteria

MLW Depth	84 ft
Storm Wave Height	62 ft
Storm Wave Period	12 sec
Maximum Storm Tide	10 ft
Maximum Astronomical Tide	4 ft
Maximum Current (for full depth)	5.4 ft/sec
Wind Velocity	150 Knots @ (+)30 ft

The approach of the storm wind and waves can be from any direction.

B. Foundation Criteria

(1) The basis for the foundation design is a McClelland report to Cubic Corporation entitled "Foundation Investigation East Coast ACMR Ocean Structures, Volume I". The soil information to be used in this analysis is one boring at Site No. 1 in the aforementioned report.

(2) Due to the nature of the sea bottom, and sea bottom currents, scouring of 5 feet below mudline will be used in the preliminary piling design to develop the

theoretical soil resistance to laterally applied loads.

C. Live Loads

The live loads shall be as follows:

Equipment Deck	150 psf
Top Deck	100 psf

The loads shall be distributed uniformly over the entire deck areas.

D. Materials

All structural shapes or fabricated tubular goods are assumed to be ASTM A-36 or equal.

E. Corrosion Protection

(1) All portions of the platform above elevation (-)4' - 0" shall be painted.

(2) All main structural members located within the splash zone shall have an extra 1/2 inch of sacrificial steel added to their wall thickness. This can be in the form of extra wall thickness or a 1/2 inch steel plate wrap.

(3) The portion of the platform below elevation (-)4' - 0" will be protected by cathodic protection. This will be provided by sacrificial anodes having a theoretically expected life of ten years.

The criteria employed for determination of structural acceptability are specified by the documents:

(a) Specification API RP 2A, Recommended Practice for Planning, Designing and Constructing Fixed Offshore Platforms, 7th Edition, American Petroleum Institute, Dallas, Texas, 1976.

(b) Manual of Steel Construction, 7th Edition, American Institute of Steel Construction, New York, N.Y., 1969.

1.3 DESIGN ASSUMPTIONS

Some assumptions to be used in this analysis are listed as follows:

True batter of piling and jacket leg	1:7
Equipment deck area	500 sq ft
Top deck area	1,200 sq ft
Spacing between decks	15 ft

1.4 PROCEDURES OF ANALYSIS

The grid wave data from the skirt-pile structures design is coded to SEALOAD in Section 2 for loading of the structure. This is again used in Sections 6 and 7 of this report.

In order to find the most economical structural member sizes relating selected jacket base spacings to required piling capacities are shown in Section 3. The graphs and formulas derived are used to produce tables relating jacket base spacing to steel weight in Section 4.

A jacket base spacing of 50 ft was then chosen together with preliminary member sizes in Section 5 and sketches were proposed. Section 6 shows the idealized structure with designated joint and member numbers and also the results of the SEALOAD loadings on the structure. Analyzing the results of the loading together with the penetration required for the piles, it was decided that another SEALOAD run should be made to determine the loading to the pile using a 60 ft jacket base spacing (Section 7). A SEALOAD run was also made on the boatlanding (Section 8) and stairway (Section 9) to provide the additional wind and wave forces to the structure.

The pile sizes and lengths are proposed in Section 10 of this report. The piles are then analyzed to ensure sufficient lateral load carrying capacities. The loading conditions on the structure are detailed in Section 11 and the final STRAN run was made to check the integrity of the entire structure.

The results of the STRAN run are shown in Section 12. Section 13 is the final area and weight take-offs for pricing.

1.5 DESIGN SUMMARY

Some of the more significant results from the analysis are summarized as follows:

Environmental Forces:

Total wind and wave forces (Including boatlanding and stairway)	1,350 kips
Total overturning moment (including boatlanding and stairway)	109,627 ft-kips

Pile Axial Loads:

Maximum compressive load	1,712 kips
Maximum tensile load	1,453 kips

Structural Dimensions:

Piling

Outside diameter	36 in.
Penetration below mudline	180 ft

Jacket

Spacing at mudline	50.1 ft
Spacing at work-point level	30.0 ft
Height	101 ft-9 in.

Superstructure

Equipment deck	15 ft x 30 ft
Top deck	35 ft x 35 ft

Structural Steel Weight

Piling	681,620 lbs

Superstructure	172,000 lbs
Jacket	315,160 lbs
Total weight (excluding boat-landing, stairway and miscellaneous items)	1,168,780 lbs

1.6 PERSONNEL RESUMES

The personnel whose resumes follow were actively engaged in this project.

CREST OFFSHORE, INC.

James M. Atkinson

Design Engineer

University	Degree	Year
University of Notre Dame	2 yrs. Aeronautical Engineering	1963
Oklahoma State University	Bachelor of Architectural Engineering	1967

Licenses: Registered Professional Engineer - Oklahoma

Experience:

1975 to Present — Crest Offshore, Inc.

Design Engineer — Designed office buildings and luxury camp for TOTAL Indonesie in Borneo, Indonesia.

1974 to 1975 — Atkinson Engineering Co.

Owner — Independent design work with other consulting engineers on Yale Avenue Methodist Church, new Central High School and new Sear's Building.

1972 to 1974 — Bloom Van Fossen, Brase Architects & Engineering

Associate Engineer — Responsible for the structural design of Copper Oaks Office Park, Sand Springs Shopping Center, East Vue Shopping Center, United Bank, Falls Office Tower and Shopping Center Denver; The Park, The Port and Falls Phase IV.

CREST OFFSHORE, INC.

James M. Atkinson

Design Engineer

Experience Continued:

1970 to 1972	Sullivan Engineering Co., Tulsa Oklahoma
Senior Engineer	Responsible for design of Heilder Tower, Hornet Stadium, Sheraton Inn, Oral Robert's University Dormitories, O.R.U. Geodestic Dome, Hathaway Mfg. Co. Plant, U.S. Jaycees Expansion, Union High School, Ponca City Savings & Loan, 32 story bank building in Tampa, Florida; Clinton Jr. High School, Thoreau Jr. High School and Grissom Elementary School.
1969 to 1970	Craig & Keithline Consulting Engineers, Tulsa, Oklahoma
Junior Engineer	Assisting in the design of bridges, numerous electrical relay stations and river crossing towers. Later became Senior Engineer in charge of designing sewage treatment and water treatment plant structures, schools and commercial buildings.
1967 to 1969	Engineering Pacific, Inc., Portland, Oregan
Junior Engineer	Responsible for the structural design of concrete tilt-up warehouses, rigid frame steel buildings feed and seed mills, residences, office and commercial buildings.

February 26, 1976

SECTION 2

GRID WAVE DATA

2.1 INTRODUCTION

This structure is designed to the same criteria as those used to design the skirt-pile structure. A Crest Engineering program using Stoke's 5th Order Gravity Wave Theory was used to develop the wave pressure profile for the given wave. This section codes to Synercom Format the pressure profile of that wave. A 24 in. diameter pipe pile extending from the mudline to 145 ft above mudline was used to test the final wave grid. A hand analysis was then computed to test the results from the SEALOAD report. The results were compatible thus indicating that the grid wave data had been coded properly and was ready for use in the loading of the three-pile and four-pile structures.

CREST OFFSHORE, INC.

Sheet 2.02 of 4 PLE

By WV Client U.S. NAVY Subject STRUCTURAL CONCEPT ANALYSIS

Date 3-31-76 Job No. 27-70L-92 Calculation GRID WAVE DATA

2.2 TABLE 4P2-1

HORIZONTAL WAVE PRESSURES for a 24" ϕ PIPE

No.	X SPACING FROM CREST											
	0		(1)	6601 (43)			3		(2)	653 (42)		
	PRESSURE		ELEV.	PRESSURE			PRESSURE		ELEV.		PRESSURE	
1	921	921	142				920	895	140	141	844	867
		883	140									
2	845	845	138				845	845	136	138	797	797
		798	136					812			705	
3	777		135				778	763	133	134	719	733
		746	133									
4	716		131				718	718	130	130	676	676
		694	130									
5	661		128				663	639	125	127	602	625
		624	125									
6	611		124				614			123		579
7	566	566	120				570	570		120	537	537
8	526		117				530	518	115	116	488	499
		508	115									
9	489		113				494	469	110	113	442	465
10	456	456	110				461			109		434
11	426		106				431	424	105	106	399	405
		417	105									
12	399		103				404	387	100	102	365	380
		380	100									
13	374		99				379			99		357
14	352		96				357			95		335
15	331		92				336	327	90	92	307	316
		318	90									
16	312		89				317			88		298
17	295		85				300	279	80	85	262	282
		274	80									
18	266		78				270			78		254
19	241		71				246	243	70	71	229	231
		238	70									
20	220		64				225	218	60	63	204	211
		210	60									
21	203		57				208			56		195
22	178		43				182	180	40	42	169	171
		175	40									
23	161		28				165	160	20	28	151	156
		156	20									
24	152		14				156			14		147
25	150		7				154			7		145
26	149	149	0				153	153		0	144	144

Same as 0

CREST OFFSHORE, INC.

Sheet 2.03 of 4 PLE

By JWA Client U.S. NAVY Subject STRUCTURAL CONCEPT ANALYSIS

Date 3.31.76 Job No. 27-701-72 Calculation GRID WAVE DATA

TABLE 4P2-2

HORIZONTAL WAVE PRESSURES for a 24" ϕ PIPE

Y	X SPACING FROM CREST															
	17		(3)		644		(41)		25		(4)		636		(40)	
	PRESSURE		ELEV.		PRESSURE				PRESSURE		ELEV.		PRESSURE			
1	807	844	138	139	138	749	769		778	778	130		646	646		
2	799	799		136		709	709		722	722	133		599	599		
		754	133		133	669										
3	739			132			655		671	671	130		557	557		
		702	130		130	622										
4	684			129			606		625	611	126		506	518		
											125					
5	635	635		125		562	562		583	554	123		459	483		
											120					
6	590	570	120	122	120	504	522		544		119			451		
7	549			118			486		509	498	116		412	421		
											115					
8	512	512		115		453	453		477	456	113		376	395		
											110					
9	479	469	110	111	110	414	423		448		109			370		
10	448	427	105	108	105	377	396		421	415	106		343	348		
											105					
11	420			104			371		397	382	102		315	328		
											100					
12	395	389	100	101	100	344	349		374		99			309		
13	371			97			328		354		96			292		
14	350			94			309		335	323	92		267	276		
											90					
15	331	327	90	91	90	288	292		317		89			262		
16	313			87			276		301		85			249		
17	297	281	80	84	80	248	262		287	280	82		231	237		
											80					
18	269			77			237		261	245	75		203	216		
											70					
19	245	245		70		216	216		239		68			198		
20	225	218	60	63	60	193	199		221	219	61		181	183		
											60					
21	208			56			154		200		55			170		
22	184	182	40	42	40	160	162		183	182	41		151	152		
											40					
23	167	162	20	28	20	144	148		168	163	27		136	139		
											20					
24	158			14			140		159		14			132		
25	156			7			138		157		7			131		
26	155	155		0		138	138		156	156	0		130	130		

CREST OFFSHORE, INC.

Sheet 204 of 4PILE

By WM Client U.S. NAVY Subject STRUCTURAL CONCEPT ANALYSIS

Date 3-31-76 Job No. 27-771-92 Calculation GRID WAVE DATA

TABLE 4P2-3

HORIZONTAL WAVE PRESSURES for a 24" ϕ PIPE

No.	X SPACING FROM CREST															
	33		(8)		628		(39)		58		(8)		603		(36)	
	PRESSURE		ELEV.		PRESSURE				PRESSURE		ELEV.		PRESSURE			
1	674	674	130	133	130	519	519		397		115	119	115			222
2	630	641		129		494	485		380	374		116		209		212
3	590		125	126	125	444	454		363			113				204
4	553	578	120	123	120	406	425		348	348		110	190			196
5	519	528		119			399		333	324	105	107	105	183		188
6	488	478	115	116	115	307	375		320			104				181
7	459	440	110	113	110	337	352		307	303	100	101	100	172		174
8	433			109			332		295			98				168
9	408	401	105	106	105	307	313		283			95				162
10	386	370	100	103	100	284	290		273	266	90	92	90	153		156
11	365			99			280		263			89				151
12	346			96			266		253			86				146
13	329			93			252		244			84				142
14	313	313		90		240	240		236	233	80	81	80	135		137
15	298			86			229		228			78				133
16	284			83			218		221			75				130
17	272	272		80		209	209		214	210	70	72	70	124		126
18	249	241	70	73	70	180	192		202			66				120
19	230			66			177		191	191		60		114		114
20	214	214		60		165	165		182			54				109
21	200			53			155		174	165	40	48	40	101		105
22	180	180		40		139	139		161			36				99
23	166	162	20	27	20	126	129		152	150	20	24	20	93		94
24	158			13			123		147			12				92
25	156			7			122		146			6				91
26	156	156		0		122	122		146	146		0		91		91

CREST OFFSHORE, INC.

Sheet 205 of 4 PLE

By WMA Client U.S. NAVY Subject STRUCTURAL CONCEPT ANALYSIS

Date 3.31.76 Job No. 27-701-92 Calculation GRID WAVE DATA

TABLE 4P2-4

HORIZONTAL WAVE PRESSURES for a 24" ϕ PIPE

Pt. No.	X SPACING FROM CREST													
	91 (12)			570 (32)			330.5 (22)							
	PRESSURE		ELEV.		PRESSURE		PRESSURE		ELEV.		PRESSURE			
1	195	145	105	105	33	33	-17	-17	80	80				
2	191		103			34	-16			78				
3	187	187	100	100	35	35	-16			76				
4	183		97			36	-15			74				
5	179		95			37	-14			72				
6	175		92			38	-13	-13	70	70				
7	171	171	90	90	39	39	-13			68				
8	168		87			39	-12			66				
9	165		84			40	-12			64				
10	161	159	82	80	41	41	-11			62				
11	158		79			41	-11	-11	60	60				
12	155		76			42	-10			58				
13	153		74			42	-10			56				
14	150	149	71	70	42	42	-9			54				
15	147		68			43	-9			52				
16	145		66			43	-9			50				
17	142	140	63	60	44	43	-8			48				
18	138		55			44	-8			44				
19	134		53			44	-7	-7	40	40				
20	131		47			44	-7			36				
21	128	127	42	40	44	44	-6			32				
22	123		32			44	-6	-6	20	24				
23	119	119	21	20	45	45	-5			16				
24	117		11			45	-5			8				
25	117		5			45	-5			4				
26	116	116	0		45	45	-5	-5	0	0				

CREST OFFSHORE, INC.

By HAYS Client U.S. NAVY Subject STRUCTURAL CONCEPT ANALYSIS

Date 4-1-76 Job No. 27-771-92 Calculation SOLID WAVE DATA

Sheet 2.06 of 4 PILE

2.3 SEA LOAD RESULTS

```
*****************************************
*                                       *                                    PAGE    1
*              SEALOAD-2                *
*   DEVELOPED BY SYNERCOM TECHNOLOGY, INC.
*            HOUSTON, TEXAS             *
*          RELEASE 2 MOD 10             *
*              JAN 1976                 *
*                                       *
*****************************************

                  1   1   2   2   3   3   4   4   5   5   6   6   7   7   8
LINE NO. 1...5....0....5....0....5....0....5....0....5....0....5....0....5....0....5....0....5....0....5....0

   1  COEF   24.0  1.0   0.0   1.0
   2  END
   3  U.S.NAVY TEMPLET DESIGN - 64 FT MWL                 JOB NO. 27-771-00
   4     100 YEAR STORM WAVE - PRESSURE PROFILES(PSF)     1 PILE  THETA = 0
   5    PRELIMINARY DESIGN    -     ATKINSON              APRIL 1976
   6  STRAN 2 1  00 16  8 8011                    CD 1     00                    2010
   7  END
   8  GRID  -  14   20                 FULL
   9  XSPC    0    8   17   25   33   58   91  570  603  628  636  644  653  661
  10  YSPC  142  140  138  136  133  130  125  120  115  110  105  100   90   80   70
  11          60   40   20    0
  12  YSRF  142  141  139  136  133  119  105  105  119  133  136  139  141  142
  13  SURF  921  920  867  778  674  397  195   33  222  519  646  769  867  921
  14  142   921
  15  140   883  895                                                        921
  16  138   845  845  844                                                   844  883
  17  136   798  812  799  778                                        749  797  845
  18  133   746  763  754  722  674                             646  709  765  798
  19  130   694  718  702  671  681                        519   39  669  719  746
  20  125   624  639  635  611  578                        494  537  622  676  694
  21  120   566  570  570  554  528                        448  506  562  602  624
  22  115   508  518  512  498  478  374                   406  459  504  537  566
  23  110   456  469  469  455  440  348             209  367  412  453  488  508
  24  105   417  424  427  415  401  324  195   33  183  307  343  377  399  417
  25  100   380  387  389  382  370  303  187   35  172  284  315  344  365  380
  26   90   318  327  327  323  313  266  171   39  153  200  267  288  307  318
  27   80   274  279  281  280  272  235  159   41  135  209  231  248  262  274
  28   70   238  243  245  245  241  210  149   42  124  186  203  216  229  238
  29   60   210  218  218  219  214  191  140   44  114  165  181  193  204  210
  30   40   175  180  182  182  180  165  127   44  101  139  151  160  169  175
  31   20   156  160  162  163  162  150  119   45   93  126  136  144  151  156
  32    0   149  153  155  156  156  146  116   45   91  122  130  138  144  149
  33  SURF
  34  142
  35  140
  36  138
  37  136
  38  133
  39  130
  40  125
  41  120
  42  115
```

CREST OFFSHORE, INC.

By HWS Client USPHASYT Subject STRUCTURAL CONCEPT ANALYSIS

Date 4-1-76 Job No. 27-77-92 Calculation SEID VALVE DATA

Sheet 2 of 4 Pages

```
                                                   SEALOAD=2                                                          PAGE    2
                          1   1   2   2   3   3   4   4   5   5   6   6   7   7   8
LINE NO. 1...5....0....5....0....5....0....5....0....5....0....5....0....5....0....5....0

   43  110
   44  105
   45  100
   46   90
   47   80
   48   70
   49   60
   50   40
   51   20
   52    0
   53  SECT
   54  SECT COL.LEG   TUB                                  24   1
   55  GRUP
   56  GRUP 24C COL.LEG   24    1
   57  MEMBER
   58  MEMBER    1   2 24C          11   1                                      24   1
   59  JOINT
   60  JOINT     1     0     0     0                     111111 FIXED
   61  JOINT     2     0     0   145                       111  FREE END
   62  END
```

CREST OFFSHORE, INC.

Sheet 2-08 of 4 PILE

By WMS Client U.S. NAVY Subject STRUCTURAL CONCEPT ANALYSIS

Date 4-1-76 Job No. 27-171-92 Calculation GRID WAVE DATA

**** COEFFICIENT TABLE REPORT ****

DIAMETER IN	NORMAL DRAG COEF	TANG DRAG COEF	MASS COEF
24.000	1.0000	0.0000	1.0000

U.S.NAVY TEMPLET DESIGN = 84 FT MWL JOB NO. 27-771-00

100 YEAR STORM WAVE = PRESSURE PROFILES(PSF) 1 PILE THETA = 0

PRELIMINARY DESIGN ATKINSON APRIL 1976

INPUT UNITS
....ENGLISH

OUTPUT UNITS
....ENGLISH

CREST OFFSHORE, INC.

By — 나성수 — Client — 대우조선 — Subject 구조해석 — 중대형 시스템 —
Date 4.1.76 Job No. 27-771-92 — Calculation 중량 WAVE DATA —

Sheet 2-10 of 4 PLE

**** WAVE POSITION SUMMARY REPORT ****

LOAD CONDITION 1 — WAVE ANGLE = 0.00

TRIAL NO.	DIST. TO CREST FT	PHASE ANG. WAVE TO STRUC. (DEG)	SHEAR KIPS X	SHEAR KIPS Y	SHEAR KIPS RSLNT	MUDLINE MOMENT FT*KIPS X	MUDLINE MOMENT FT*KIPS Y	MUDLINE MOMENT FT*KIPS RSLNT	VERTICAL FORCE KIPS Z
1	8.0	-4.36	88.9	0.0	88.9	0.	8228.	8228.	0.0
2	14.0	-8.71	70.3	0.0	70.3	0.	5917.	5917.	0.0

CREST OFFSHORE, INC.

By JMB Client U.S. NAVY Subject STRUCTURAL CONCEPT ANALYSIS

Date 4-1-90 Job No. 27-771-92 Calculation GRID WAVE DATA

Sheet 2-11 of 4-PILE

```
****L O A D   S U M M A R Y   R E P O R T****

WAVE NUMBER =   1                    WAVE DIRECTION = 0.000

X SHEAR FORCE =            88.8864 KIPS
Y SHEAR FORCE =             0.0000 KIPS
RESULTANT SHEAR FORCE =    88.8864 KIPS

X MUDLINE MOMENT =          0.0000 FT=KIPS
Y MUDLINE MOMENT =       8228.0501 FT=KIPS
RESULTANT MUDLINE MOMENT 8228.0501 FT=KIPS

Z VERTICAL FORCE =          0.0000 KIPS
```

CREST OFFSHORE, INC.

Sheet 2-12 of 4 PILE

By WWO Client U.S. NAVY Subject STRUCTURAL CONCEPT ANALYSIS
Date 4-2-76 Job No. 27-771-92 Calculation GRID WAVE DATA

APPROX. WAVE PROFILE AT A POINT 8 FT. BEHIND THE WAVE CREST FOR CHECKING WITH SEALOAD RESULTS.

2.4 WAVE CHECK

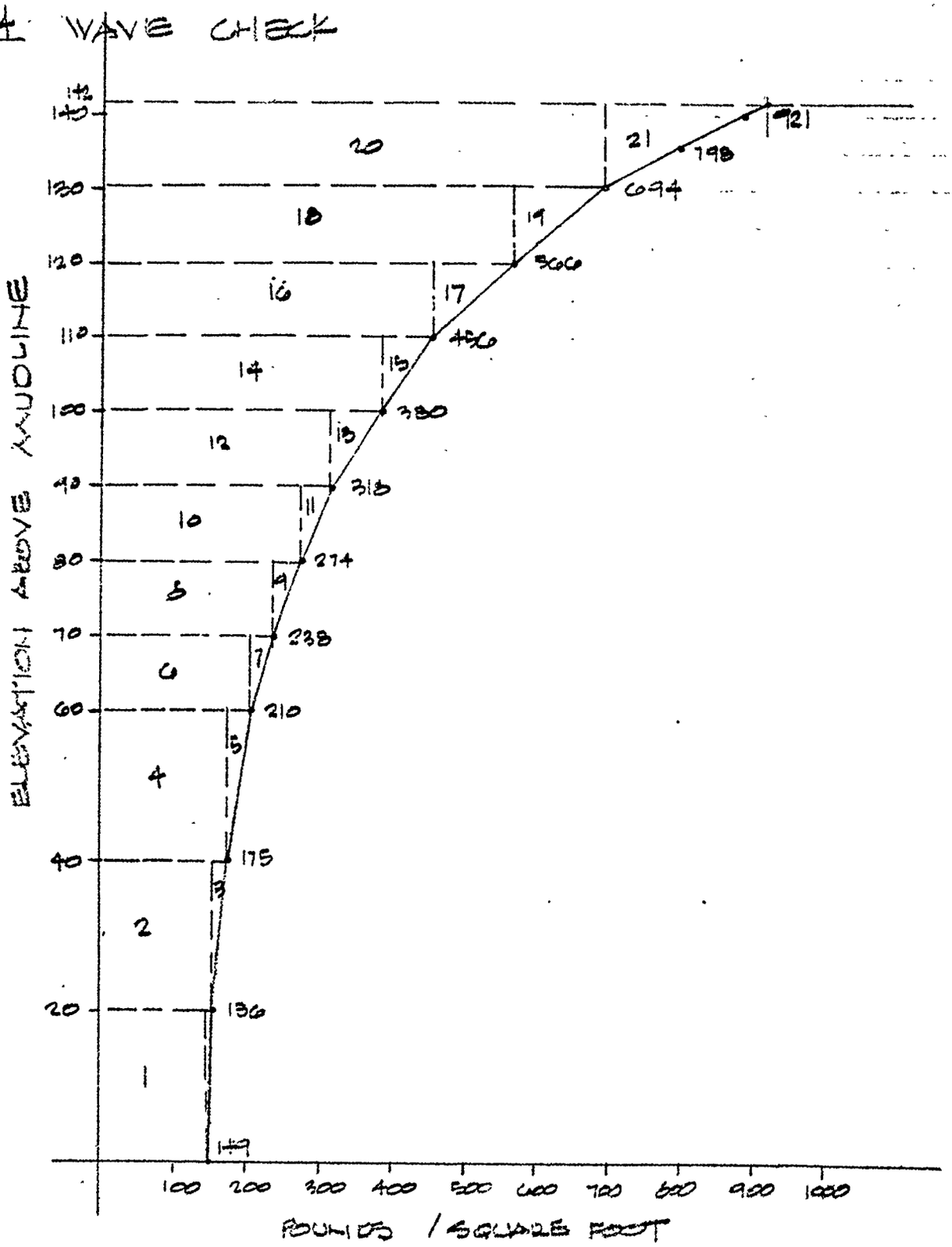

FIGURE 4P2-1

WAVE PROFILE AT -8' FROM CREST OF WAVE

CREST OFFSHORE, INC.

Sheet 3-13 of 4 FILE

By WA Client U.S. NAVY Subject STRUCTURAL CONCEPT ANALYSIS
Date 4.2.96 Job No. 21-771-92 Calculation GRID WAVE DATA

TABLE 4P2-5

AREA	FORCE (LBS/S.F.) x S.F		V LBS	MOM ARM FT.		MOM FT. KIPS
1	149 x 20	=	2980	10	=	29.8 K
2	156 x 20	=	3120	30	=	93.6
3	19 x 20 x .5	=	190	33.3	=	6.33
4	175 x 20	=	3500	60	=	210.0
5	35 x 20 x .5	=	350	53.3	=	18.7
6	210 x 10	=	2100	70	=	147.0
7	28 x 10 x .5	=	140	66.7	=	9.3
8	238 x 10	=	2380	75	=	178.5
9	36 x 10 x .5	=	180	76.7	=	13.8
10	274 x 10	=	2740	85	=	232.9
11	44 x 10 x .5	=	220	86.7	=	19.1
12	318 x 10	=	3180	95	=	302.1
13	62 x 10 x .5	=	310	96.7	=	30.0
14	380 x 10	=	3800	105	=	399
15	76 x 10 x .5	=	380	106.7	=	40.5
16	456 x 10	=	4560	115	=	524.4
17	110 x 10 x .5	=	550	116.7	=	64.2
18	560 x 10	=	5600	125	=	707.5
19	128 x 10 x .5	=	640	126.7	=	81.1
20	699 x 12	=	6940	136	=	943.8
21	227 x 12 x .5	=	1362	138	=	188.0
			45282			4239.0
			x 2			x 2
			90,564	88,880		8479.2 K

CHECK SHEAR
90,564# ≈ 88,880# FROM SEALOAD ∴ O.K.

CHECK MOMENT
8,479.2 FT.K. ≈ 8,218 FT.K. FROM SEALOAD ∴ O.K.

ASSUME WAVE GRID IS CODED PROPERLY

SECTION 3

BASE SPACING vs. PILING CAPACITY

3.1 INTRODUCTION

This section uses the forces from the skirt-pile structure to derive two formulas for the length 'L' of the base of the four-pile jacket as a function of the axial load on the piling, either tension or compression. This information is compiled into a graph plotting the base spacing to the required pile compression and tension capacity. The graph is used in Section 4 to determine the weight of the total structure as a function of base spacing. The forces from the skirt-pile structure are:

Shear V = 1,254.6 kips

Base Moment M = 107,302 ft kips

Total Gravity Load = 450 kips

CREST OFFSHORE, INC.

Sheet 3-02 of 4 [illegible]

By WA Client U.S. NAVY Subject STRUCTURAL CONCEPT ANALYSIS
Date 4.2.76 Job No. 27-171-92 Calculation BASE SPACING VS. PILING CAPACITY

3.2 - LOADING ON STRUCTURE

TOTAL GRAVITY LOAD $P = 450$ KIPS

BASE SHEAR $V = 1,254.6$ KIPS

MOMENT $M = 107,302$ FT·KIPS

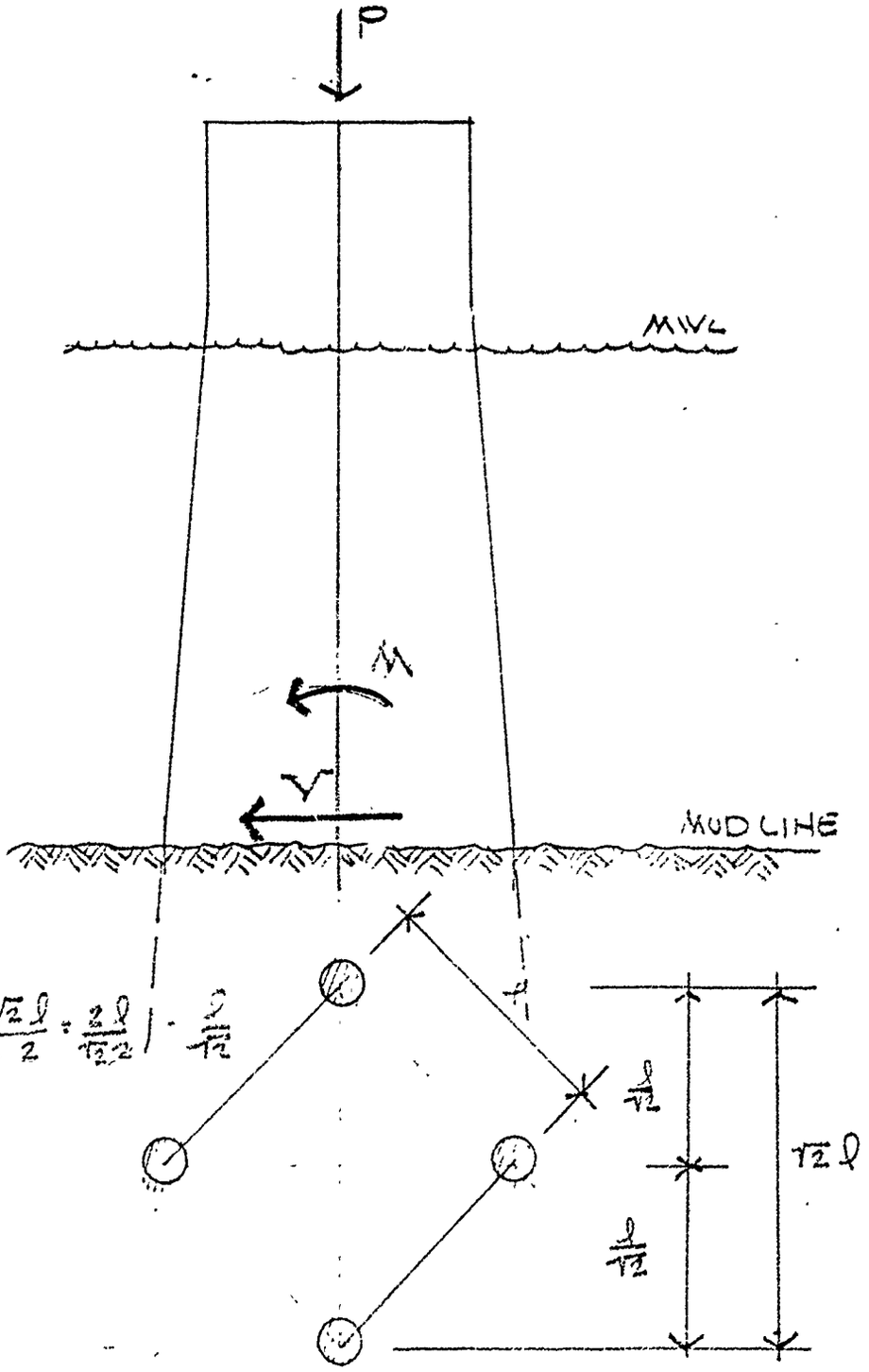

By JWS Client U.S. NAVY Subject STRUCTURAL CONCEPT ANALYSIS

Date 4.2.76 Job No. 21:77L.92 Calculation BASE TRACING VS. PLANE CAPACITY

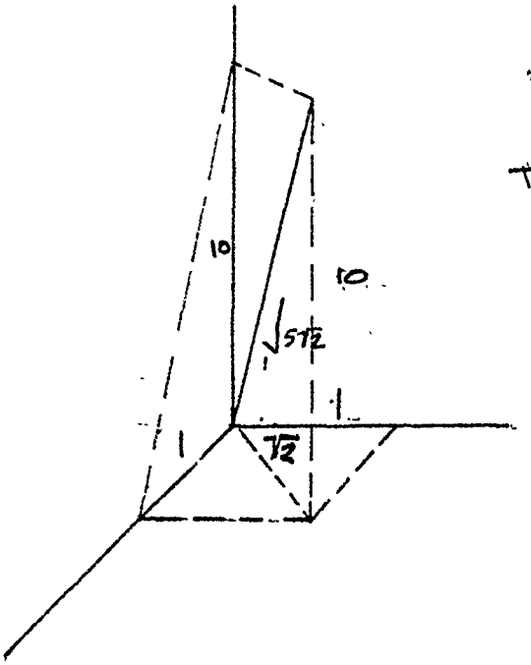

PROJECTED BATTER 1:10

TRUE BATTER

$\sqrt{2} : 10$

$1 : \frac{10}{\sqrt{2}} = 1 : 7.071$

$= \frac{10\sqrt{2}}{2} = 5\sqrt{2}$

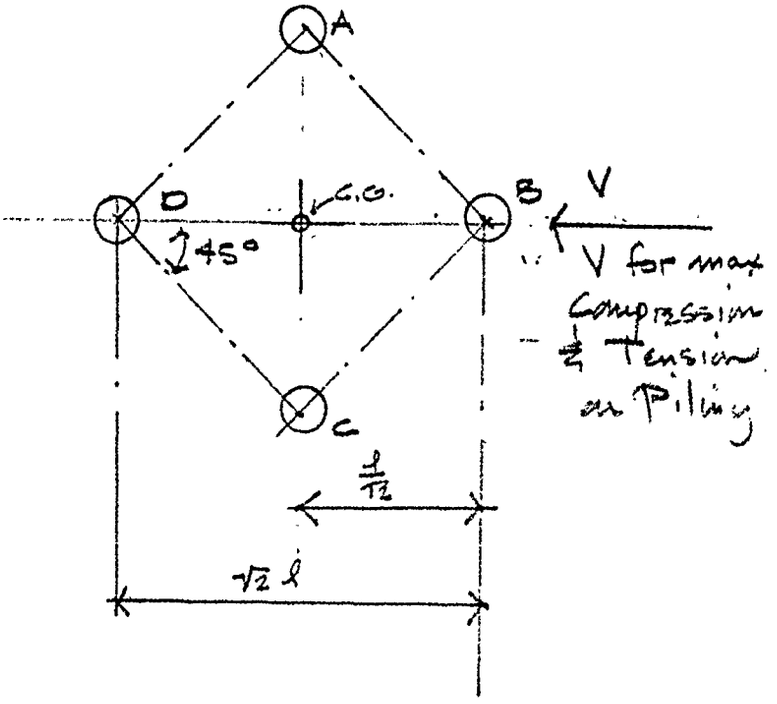

By WVS Client U.S. NAVY Subject STRUCTURAL CONCEPT ANALYSIS
Date 4.2.76 Job No. 27-171-92 Calculation BASE SPACING VS. PILING CAPACITY

Maximum Compressive & Tensile Forces in Piles

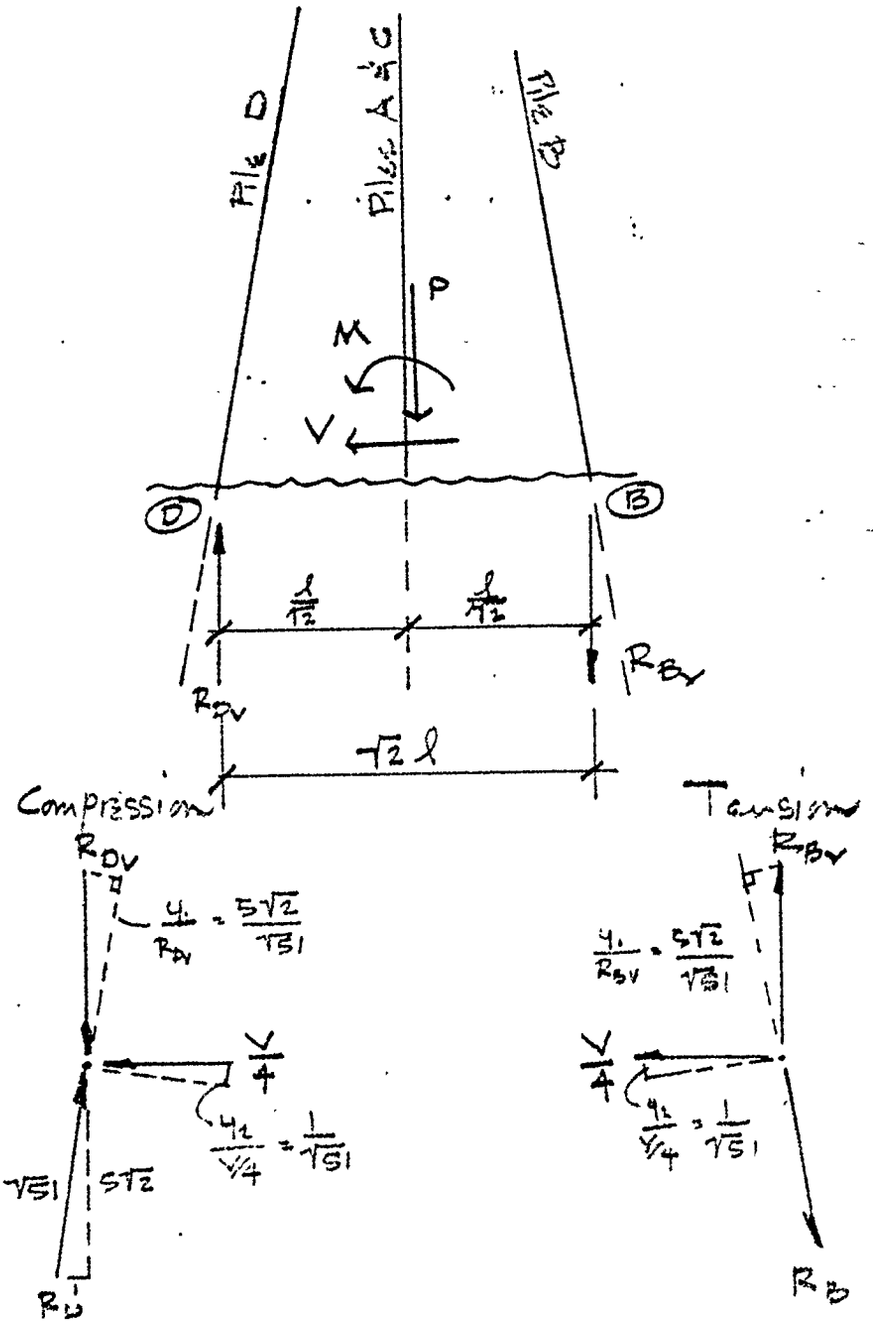

$$R_D = \frac{5\sqrt{2}}{\sqrt{51}} R_{DV} + \frac{1}{\sqrt{51}} \frac{V}{4} \quad (1a) \qquad R_B = \frac{5\sqrt{2}}{\sqrt{51}} R_{BV} + \frac{1}{\sqrt{51}} \frac{V}{4} \quad (1b)$$

$$R_{DV} = \frac{\sqrt{51}}{5\sqrt{2}} R_D - \frac{V}{20\sqrt{2}} \quad (2a) \qquad R_{BV} = \frac{\sqrt{51}}{5\sqrt{2}} R_B - \frac{V}{20\sqrt{2}} \quad (2b)$$

By JMA Client U.S. NAVY Subject STRUCTURAL CONCEPT ANALYSIS
Date 4.26.76 Job No. 27-77L-92 Calculation PILE SPACING VS. PILING CAPACITY

Summation of moments about B axis for Compression

$$R_{DV}\sqrt{2}\,l_c = M + \frac{P l_c}{\sqrt{2}} - \frac{P l_c}{2\sqrt{2}} \quad (3a)$$

$$= M + \frac{P l}{2\sqrt{2}}$$

$$M = \left(R_{DV}\sqrt{2} - \frac{P}{2\sqrt{2}}\right) l_c$$

$$l_c = \frac{M}{R_{DV}\sqrt{2} - P/2\sqrt{2}} \quad (4a)$$

Substituting Eq. (2a) into Eq. (4a)

$$l_c = \frac{M}{\frac{\sqrt{51}\,R_D}{5} - \frac{V}{20} - \frac{P}{2\sqrt{2}}} \quad (5a)$$

about D axis for Tension

$$R_{BV}\sqrt{2}\,l_T = M - \frac{P l_T}{\sqrt{2}} + \frac{P l_T}{2\sqrt{2}} \quad (3b)$$

$$= M - \frac{P l_T}{2\sqrt{2}}$$

$$\left(R_{BV}\sqrt{2} + \frac{P}{2\sqrt{2}}\right) l = M$$

$$l_T = \frac{M}{R_{BV}\sqrt{2} + P/2\sqrt{2}} \quad (4b)$$

Substituting Eq (2b) into (4b)

$$l_T = \frac{M}{\frac{\sqrt{51}\,R_B}{5} - \frac{V}{20} + \frac{P}{2\sqrt{2}}} \quad (5b)$$

$M = 107,302$ FT·KIPS
$P = 450$ KIPS
$V = 1254.0$ KIPS

$\frac{\sqrt{51}}{5} = 1.428$

$\frac{V}{20} = -62.73$ $\quad -62.73$

$\frac{P}{2\sqrt{2}} = -159.10$ $\quad +159.10$

-221.83 $\quad +96.37$

$$l_c = \frac{107,302}{1.428 R_D - 221.83} \quad (6a)$$

$$l_T = \frac{107,302}{1.428 R_B + 96.37} \quad (6b)$$

when $l_c = \infty$ $R_D = \min$

$$R_D = \left[\frac{107,302}{l_c} + 221.83\right]\frac{1}{1.428}$$

$$= \frac{221.83}{1.428} = 155.3^{k}$$

when $R_B = 0$ $l_T = \max$

$$l_T = \frac{107,302}{96.37} = 1113.4'$$

CREST OFFSHORE, INC.

Sheet 3.06 of 4 PILE

By JWA Client U.S. NAVY Subject STRUCTURAL CONCEPT ANALYSIS
Date 4.26.76 Job No. 27-771-92 Calculation BASE SPACING VS. PILING CAPACITY

TABLE 4P3-1.

$\frac{L}{D}$	COMPRESSION		TENSION	
	R_D (KIPS)	$l = \frac{107,302}{1.428R_D - 221.33}$ (FT)	R_B (KIPS)	$l = \frac{107,302}{1.428R_B + 96.37}$ (FT.)
1	155.3	∞	0	1113.4
	250	793.8	183	300.0
2	405.8	300.0	250	236.7
3	500	218.0	500	132.4
4	750	126.4	750	91.92
5	1000	88.96	1000	70.39
6	1250	68.6	1250	57.03
7	1500	55.9	1500	47.94
8	1750	47.12	1750	41.34
9	2000	40.73	2000	36.34
10	2250	35.87	2250	32.42
11	2500	32.05	2500	29.27
12	2750	28.96	2750	26.67
13	3000	26.41	3000	24.50
	∞	0	∞	0

CREST OFFSHORE, INC.

Sheet 3.07 of 4 PILE

By JWS Client U.S. NAVY Subject STRUCTURAL CONCEPT ANALYSIS

Date 4.5.70 Job No. 27-771-92 Calculation BASE SPACING VS. PILING CAPACITY

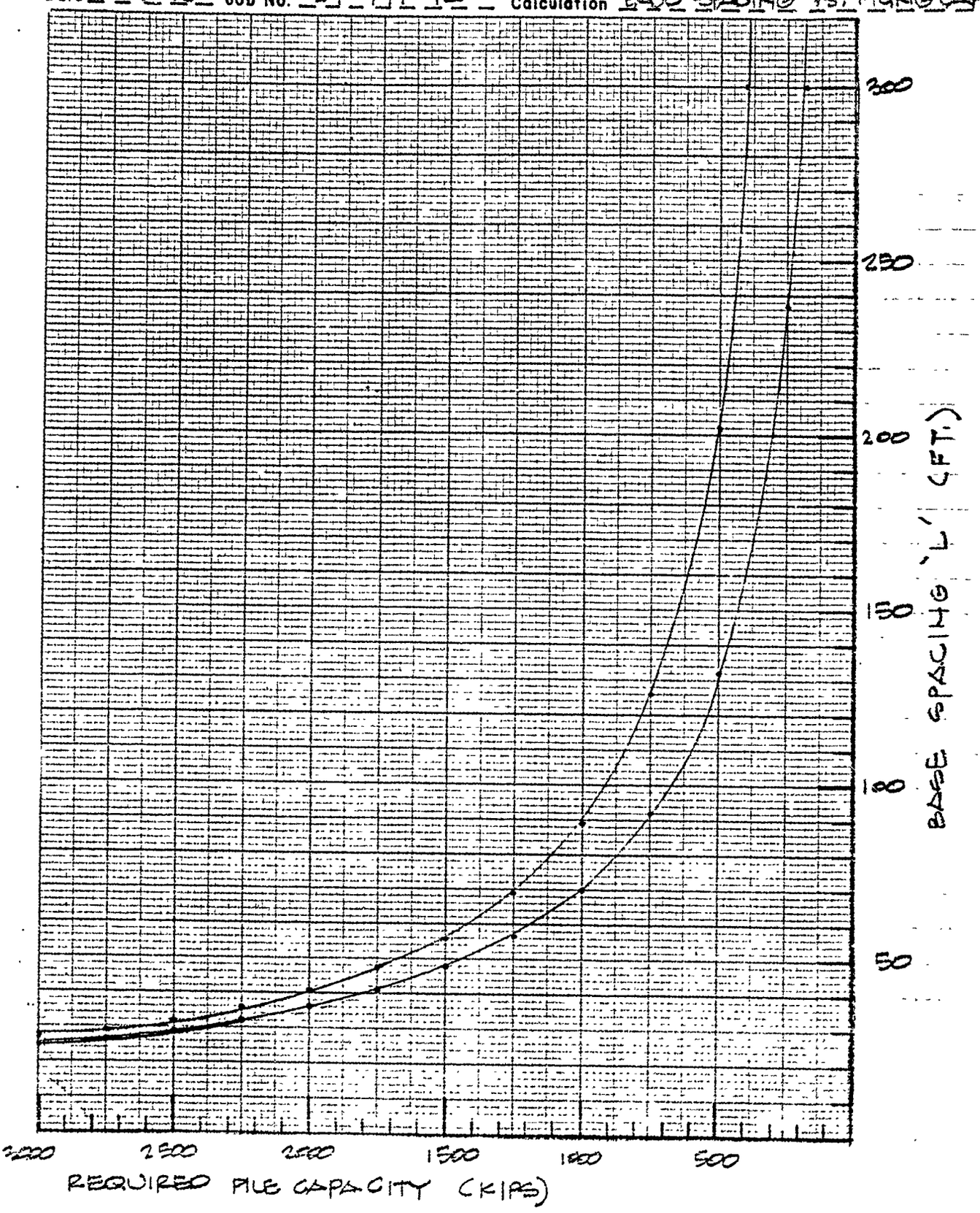

FIGURE 4P3-1

3.3

SECTION 4

STRUCTURAL STEEL WEIGHT VARIATION

4.1 INTRODUCTION

This section derives formulas and then develops tables to determine the least total weight of a four-pile structure for different jacket base widths at mudline from the given soil conditions and the environmental forces.

The template type structure has to resist the overturning moment due to the wind and wave loadings on the structure. The farther apart the jacket legs are spread the lesser the axial load on the piling will be. However the horizontal and diagonal bracing lengths will be increased thus requiring longer and possibly larger members as the slenderness ratio is increased. As the jacket legs get closer together the axial loads on the pilings increase thus requiring longer piles.

Section 4.2 determines the total length of horizontal and diagonal members as a function of the jacket leg spacing 'L' at the mudline. These are shown in Table 4P4-1. These lengths are multiplied by an assumed unit brace member weight to provide Table 4P4-2 which gives total weight of bracing for the different leg spacings chosen.

Section 4.3 computes the total weight of the four jacket legs. This is assumed to be constant for all leg spacings and is shown in Table 4P4-3.

From inspection it was determined the pilings will have to be driven a minimum of 150 ft below mudline. Section 4.4 Table 4P4-4 shows assumed piling sizes from the top of the jacket to 150 ft below mudline. The

additional pile length beyond 150 ft is a function of the required pile axial load capacity. For a given jacket leg spacing 'L' the required pile axial load capacity is found from Figure 4P3-1, Section 3, Page 3.07 and placed in Table 4P4-5. The required pile penetration for the corresponding pile capacity is found from the graph, Figure 4P4-1 (See the report on Three-Pile Structure, Section 2, Page 2.39 for the development of this graph). After determining the required pile length below 150' penetration (H) the total weight of the piles as a function of 'L' is computed in Table 4P4-5.

Table 4P4-6 of Section 4.5 adds the weights of the jacket and piling to get the total weight for each 'L' chosen. The sum of the weights of the superstructure, boat landings, stairways, etc., was assumed to remain constant. From this table a jacket leg base spacing of 50 ft is chosen for the actual structural configuration analysis.

By VMO Client U.S. NAVY Subject STRUCTURAL CONCEPT ANALYSIS

Date 4-5-76 Job No. 87-771-92 Calculation STRUCTURAL STIFF. VARIATION

4.2 BASE SPACING VS. JACKET MEMBER LENGTHS

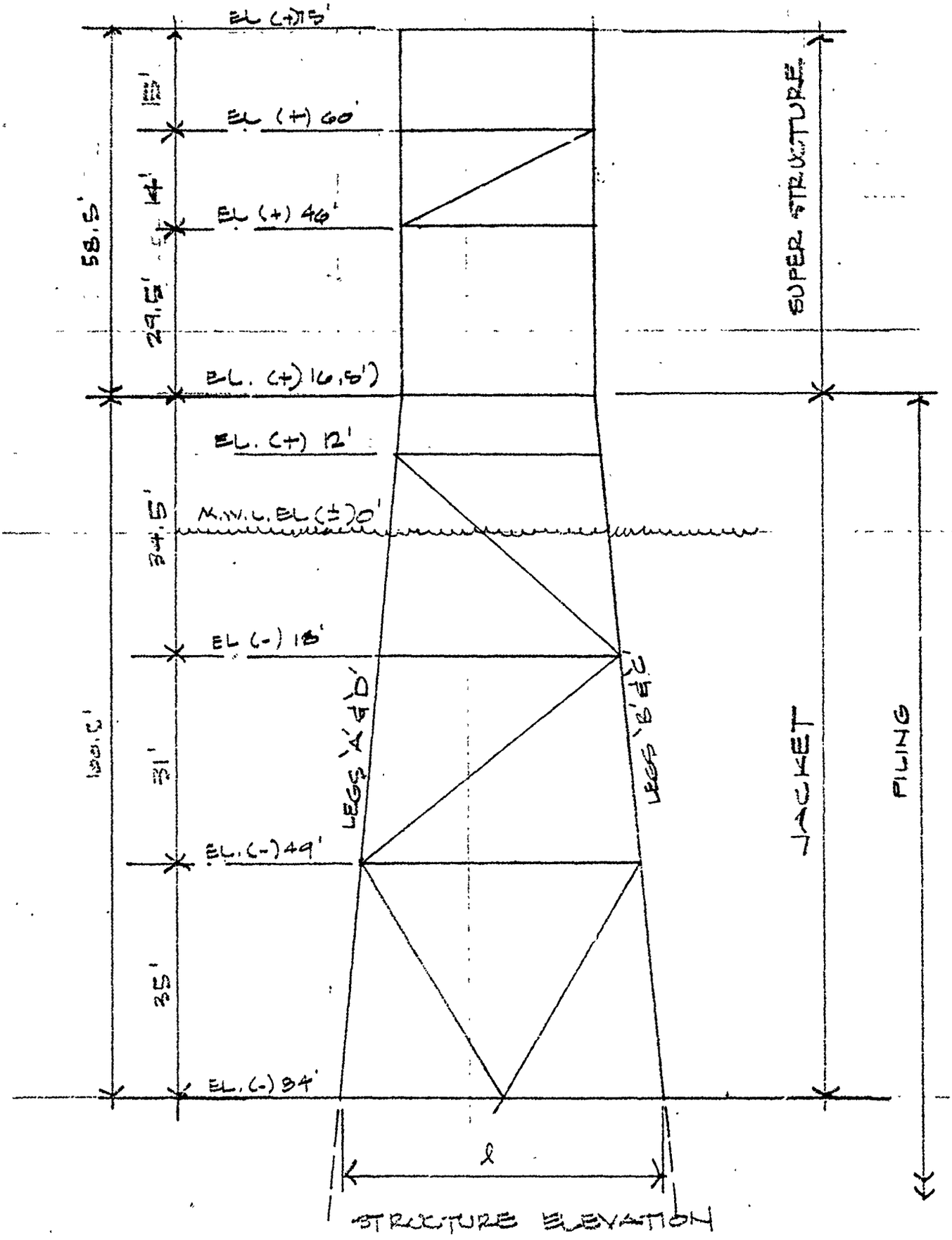

CREST OFFSHORE, INC.

Sheet 4.04 of 4 PILE

By WA Client U.S. NAVY Subject STRUCTURAL CONCEPT ANALYSIS
Date 4.5.76 Job No. 27-71-92 Calculation STRUCTURAL STL WT. VARIATION

TOP VIEW ON JACKET

Member Sizes:

(i) Bracing: See Pg.

(ii) Leg: (D+4)" ϕ x 0.50" wt.

(iii) Leg Joint Can: (D+5)" ϕ x 1.0 wt.
*D: O.D. of Pipe Piles

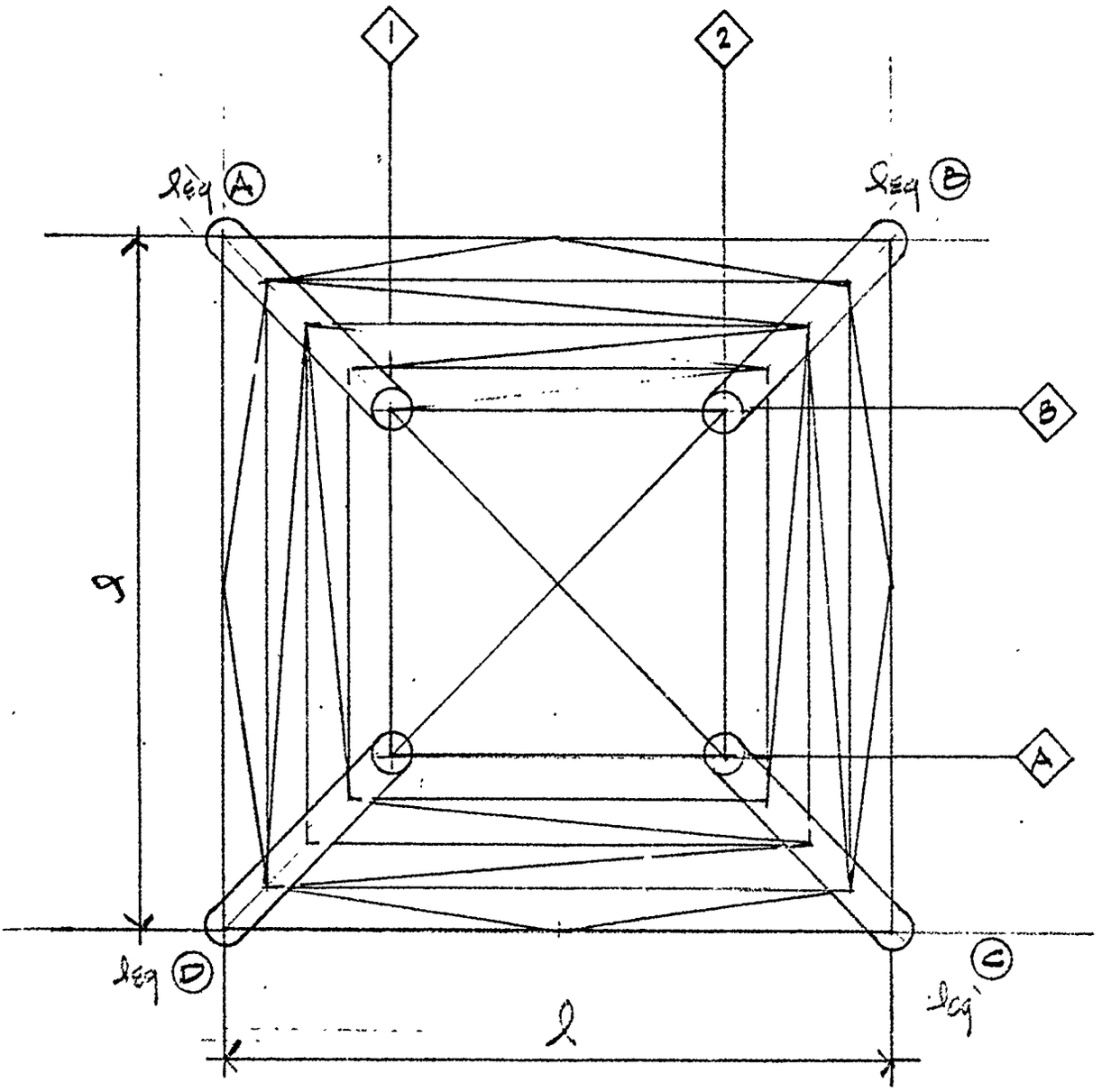

CREST OFFSHORE, INC.

Sheet 4.05 of 4 FILE

By JMA Client U.S. NAVY Subject STRUCTURAL CONCEPT ANALYSIS

Date 4-6-76 Job No. 37-771-92 Calculation STRUCTURAL STL WT VARIATION

BRACING (4-REQ'D)

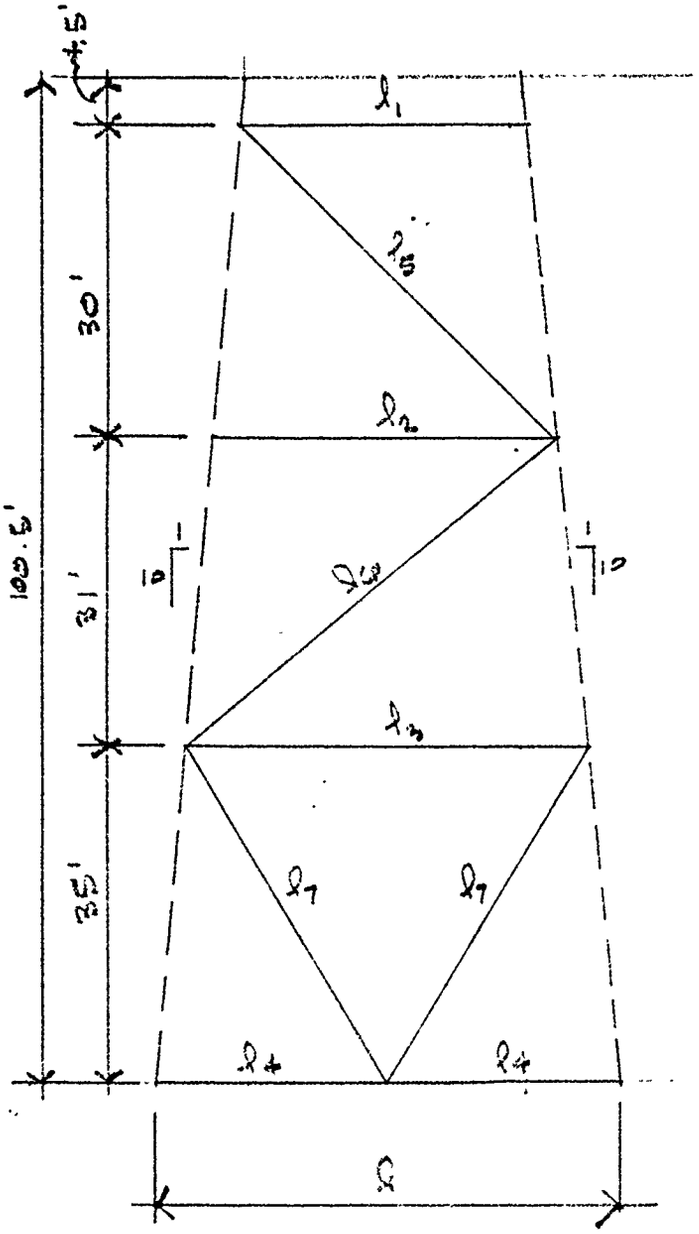

$l_1 = l - 9.6 \times 2 = l - 19.2$ (ft.)

$l_2 = l - 6.6 \times 2 = l - 13.2$ (ft.)

$l_3 = l - 3.5 \times 2 = l - 7$ (ft.)

$l_4 = l/2 = 0.5\,l$ ft.)

$l_5 = \sqrt{(30)^2 + [l_1 + 3]^2}$

$= \sqrt{(30)^2 + [l - 19.2 + 3]^2}$

$= \sqrt{(30)^2 + (l - 16.2)^2}$

$l_6 = \sqrt{(31)^2 + (l_2 + 3.1)^2}$

$= \sqrt{(31)^2 + (l - 13.2 + 3.1)^2}$

$= \sqrt{(31)^2 + (l - 10.1)^2}$

$l_7 = \sqrt{(35)^2 + (l_4 - 3.5)^2}$

$= \sqrt{(35)^2 + (0.5\,l - 3.5)^2}$

TOTAL LENGTH $L = l_1 + l_2 + l_3 + 2\,l_4 + l_5 + l_6 + 2\,l_7$

CREST OFFSHORE, INC.

By WVA Client U.S. NAVY Subject STRUCTURAL CONCEPT ANALYSIS

Date 4.6.76 Job No. 27.771-92 Calculation STRUCTURAL SETUP WITH VARIATION

Sheet 4 of 4 PLE

TABLE 4P4-1

l	l_1	l_2	l_3	l_4 [2]	l_5	l_6	l_7 [2]	L (ft.)
	$l-19.2$	$l-13.2$	$l-7$	$0.5l$	$\sqrt{(30)^2+(l-16.2)^2}$	$\sqrt{(21)^2+(l-10.1)^2}$	$\sqrt{(35)^2+(1.5l-3.5)^2}$	$l_1+l_2+l_3+2l_4+l_5+l_6+2l_7$
35	15.8	21.8	28	17.5	23.4	29.8	37.7	251.2'
40	20.8	26.8	33	20	38.3	43.1	38.7	279.4'
45	25.8	31.8	38	22.5	41.6	46.7	39.8	308.5
50	30.8	36.8	43	25	45.2	50.5	41.1	338.5
55	35.8	41.8	48	27.5	49.0	54.0	42.4	368.4
60	40.8	46.8	53	30	53.1	58.7	43.9	400.2

ALL UNITS IN FT.
FOR 1 SIDE

By JMA Client U.S. NAVY Subject STRUCTURAL CONCEPT ANALYSIS
Date 4-6-76 Job No. 27-771-92 Calculation STRUCTURAL STEEL WT VERIFICATION

TABLE 4P4-2 JACKET BRACING WT./SIDE

BASE SPACING (FT.)	BRACE MEMBER SIZE	TOTAL BRACE MEMBER LENGTH (FT.) (SEE TABLE 4P3-1)	UNIT WT. (LBS/FT.)	TOTAL WT. (LBS.)
35	18" ϕ x 0.50	251.2	93.45	23,475
40	" "	279.4	"	26,110
45	" "	308.5	"	28,829
50	" "	338.5	"	31,633
55	" "	368.4	"	34,427
60	" "	400.2	"	37,399

4.3 JACKET LEG (4-REQ'D) WEIGHT

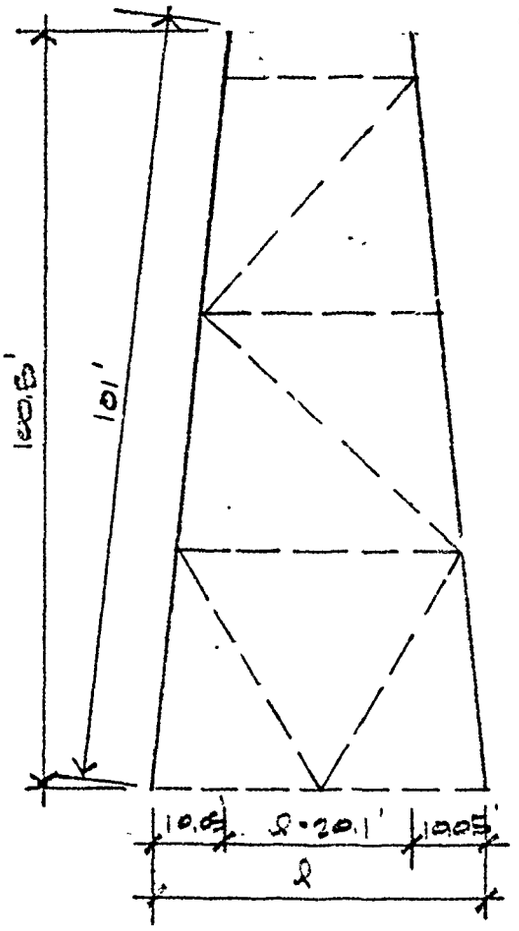

JOINT CAN: 8'-0" LONG
1.0" TK.
4 JOINTS
TOTAL LENGTH = 4 x 8 = 32'

JACKET LEG: 0.50" TK.

TOTAL LENGTH = 101.0' - 32.0' = 69.0'

TABLE 4.4-3			
PILE O.D. (IN.)	SIZE x LENGTH	UNIT WT. (LBS./FT.)	TOTAL WT. (LBS.)
JACKET LEG			
36	40" φ x .5 x 69'	210.93	14,554
JACKET CAN			
36	41" φ x 1.0 x 32'	427.21	13,671
TOTAL WT.			28,225

By WVA Client U.S. NAVY Subject STRUCTURAL CONCEPT ANALYSIS

Date 4.6.76 Job No. 27-171-92 Calculation STRUCTURAL SPEC. WT VARIATION

4.4 PILING (4-REQ'D)

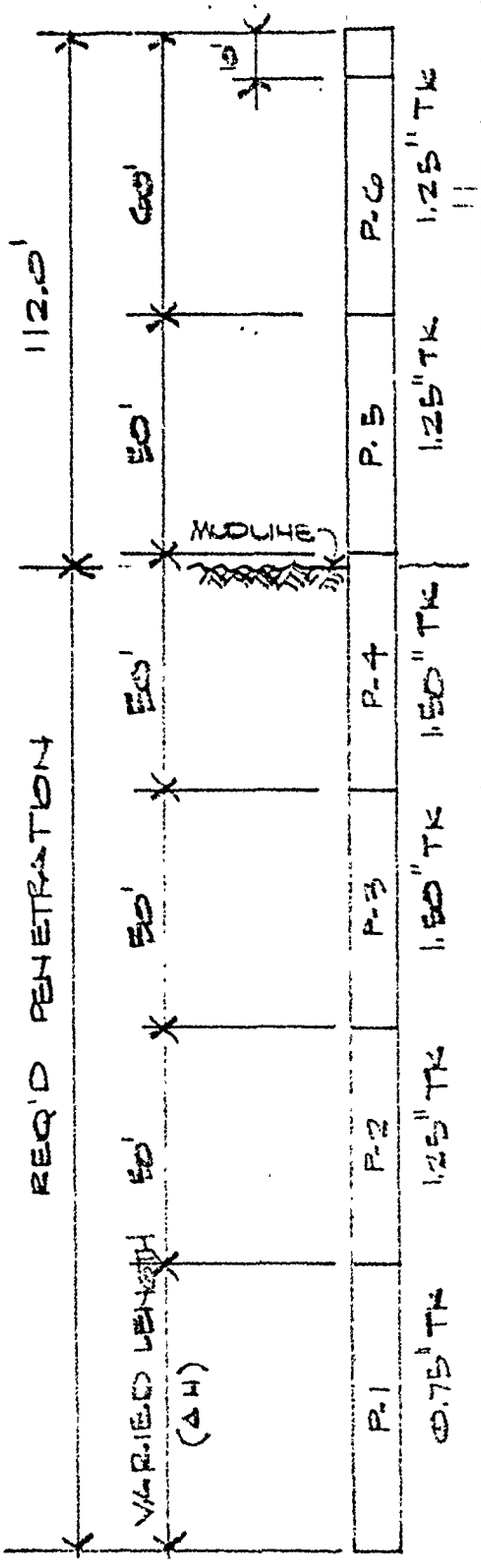

TABLE 4.P4-4

PIPE PILE	WT. (LBS/FT)	LENGTH (FT.)	TOTAL WT. (LBS)
P-6 36"φ x 1.25"	463.92	60	27,835
P-5 36"φ x 1.25	463.92	50	23,196
P-4 36"φ x 1.50	552.7	50	27635
P-3 36"φ x 1.50	552.7	50	27635
P-2 36"φ x 1.25	463.92	50	23,196
P-1 36"φ x 0.75	282.36	ΔH	282.36 ΔH
TOTAL WT = 129,497# + 282.36 ΔH			

ΔH = [Req'd Penetration + 112] - 260

= Req'd Penetration - 148

RELATIONSHIP BETWEEN l AND l_{5d}

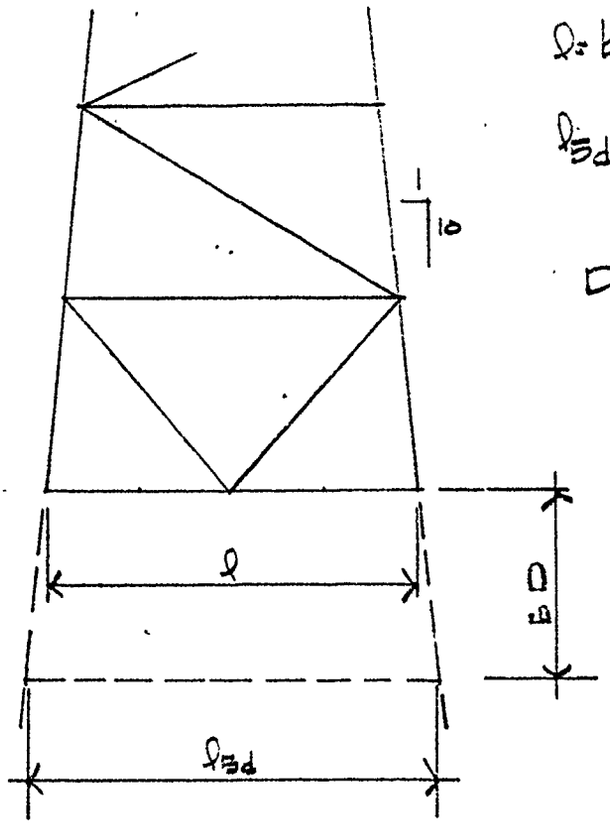

l = base spacing @ mudline

l_{5d} = base spacing @ 5D below mudline

D = pile outside diameter = 36"

$\therefore 5D = 5 \times 3' = 15$

$l_{5d} = l + \frac{15}{10} \times 2$

$= l + 3'$

CREST OFFSHORE, INC.

Sheet 4.11 of 4 PLE

By C. Chern Client NAVY Subject STRUCTURAL CONCEPT ANALYSIS

Date 4-1-76 Job No. 27-721-92 Calculation STRUCTURAL ANL OF VARISTOR

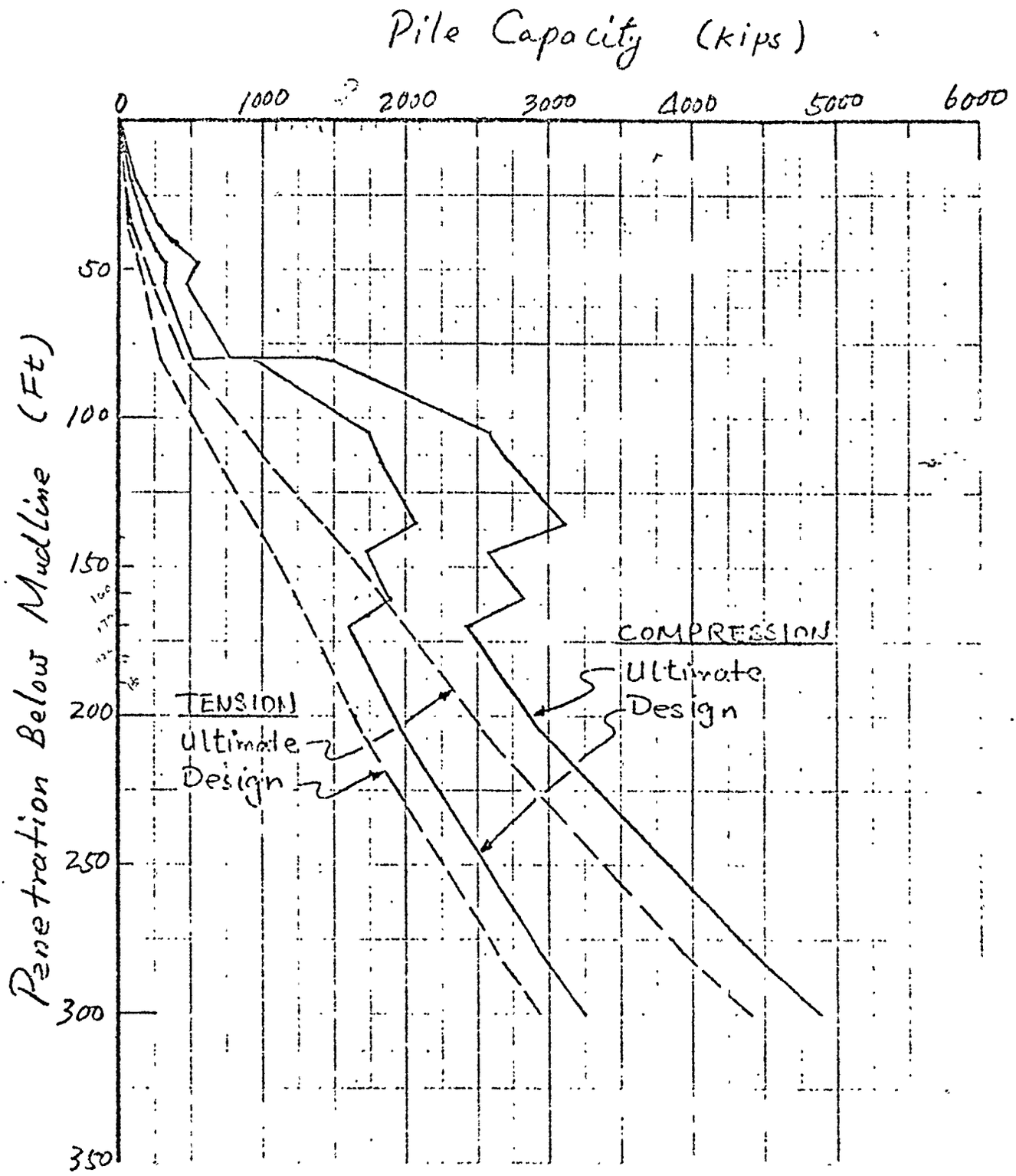

FIGURE 4P4-1

36-in. Diameter Pipe Piles

2

TABLE 4P4.-5 260-IN. DIAMETER PIPE PILES - WT / LEG

BASE SPACING		REQ'D PILE CAPACITY (REF. FIG. 4P3-1)		REQ'D PILE PENETRATION (FIG. 4P1-1)	PILE SEGMENT P1		TOTAL WT = 129,497 # + 282.36 ΔH - (1 PILE)
ℓ	ℓ_{sd}	COMPRESSION	TENSION		ΔH	282.36 ΔH	
FT.	FT.	KIPS	KIPS	FT.	FT.	LBS	LBS
35	38	2125	1875	225' *	77	21,742	151,239
40	43	1875	1650	200 *	52	14,683	144,180
45	48	1720	1500	185 *	37	10,447	139,944
50	53	1550	1350	172 *	24	6,777	136,274
55	58	1450	1225	160 *	12	3388	132,885
60	63	1350	1125	150 *	2	565	130,062

NOTES: ℓ = base spacing @ mud line

ℓ_{sd} = base spacing @ 5D below mud line
= $\ell + 3$

ΔH = Pile segmental length = Penetration Req'd - 148

* denotes transition intervals.

4.5 TOTAL WEIGHT OF STRUCTURE

$$W_T = W_P + W_J + W_S + W_M \qquad (1)$$

where W_T = TOTAL WEIGHT of STRUCTURE

W_P = WEIGHT of PILING

W_J = WEIGHT of JACKET

W_S = WEIGHT of SUPER STRUCTURE

W_M = WEIGHT of MISCELLANEOUS ITEMS such as boat landing, walkway, etc...

Assume: superstructure & miscellaneous remain constant
$W_S + W_M$ = CONSTANT = K

Therefore

$$W = W_P + W_J + K \qquad (2)$$

neglecting K

$$W = W_P + W_J \qquad (3)$$

W = 4 W_P + 4 (wt. jacket legs + wt jacket bracing)

$$W_T = 4(W_P + W_J) \qquad (4)$$

CREST OFFSHORE, INC.

By JMA Client U.S. NAVY Subject STRUCTURAL CONCEPT ANALYSIS
Date 4-6-76 Job No. 29-701-92 Calculation STRUCTURAL WT'S W/ VARIATION

TABLE 4P4-6 TOTAL WT'S for 4 FILE w/ 30" ϕ PILES

BASE SPACING AT MUDLINE	WEIGHT				
	JACKET		PILING	TOTAL for 1-SIDE	TOTAL for STRUCTURE T×4/2000
	LEG TABLE 4P3-3	BRACES TABLE 4P3-2	TABLE 4P3-5		
FT.	LBS	LBS	LBS	LBS	TONS
35	28,225	23,475	151,239	202,939	405.9 T
40	"	20,110	144,180	195,515	397.0 T
45	"	25,329	139,444	196,998	394.0 T
50	"	31,035	136,274	196,132	392.3 T
55	"	34,427	132,885	195,537	391.1 T
60	"	37,399	130,062	195,686	391.4 T

SECTION 5

STRUCTURAL CONFIGURATION

5.1 INTRODUCTION

With a jacket leg base spacing of 50' choosen from Section 4, the structure is drawn showing dimensions and assumed member sizes.

Section 5.2 shows the four (4) faces of the jacket and the jacket bracing plan at various elevations. The lengths of members are computed and their KL/r ratios established in Table 4P5-1.

Section 5.3 shows a typical elevation of the superstructure.

Section 5.4 computes the preliminary deck beam sizes for both upper and lower decks.

CREST OFFSHORE, INC.

Sheet 5.02 of 4 PILE

By JWS Client U.S. NAVY Subject STRUCTURAL CONCEPT ANALYSIS

Date 4.6.76 Job No 21-771-72 Calculation STRUCTURAL CONFIGURATION

5.2 JACKET

ROW 'A'

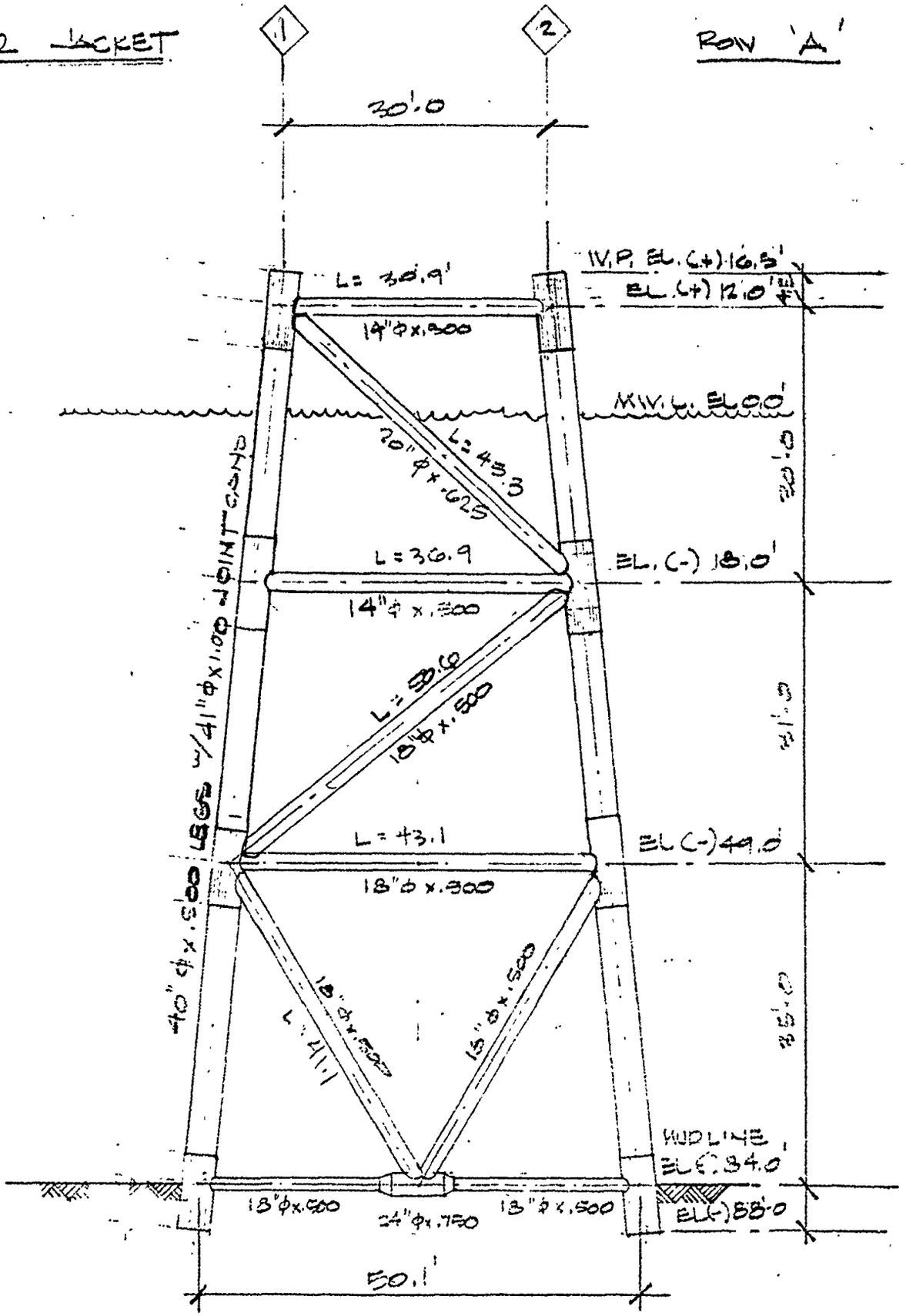

CREST OFFSHORE, INC.

Sheet 5.03 of 4 PILE

By JAS Client U.S. NAVY Subject STRUCTURAL CONCEPT ANALYSIS

Date 7-10-78 Job No. 31-771-92 Calculation STRUCTURAL CONFIGURATION

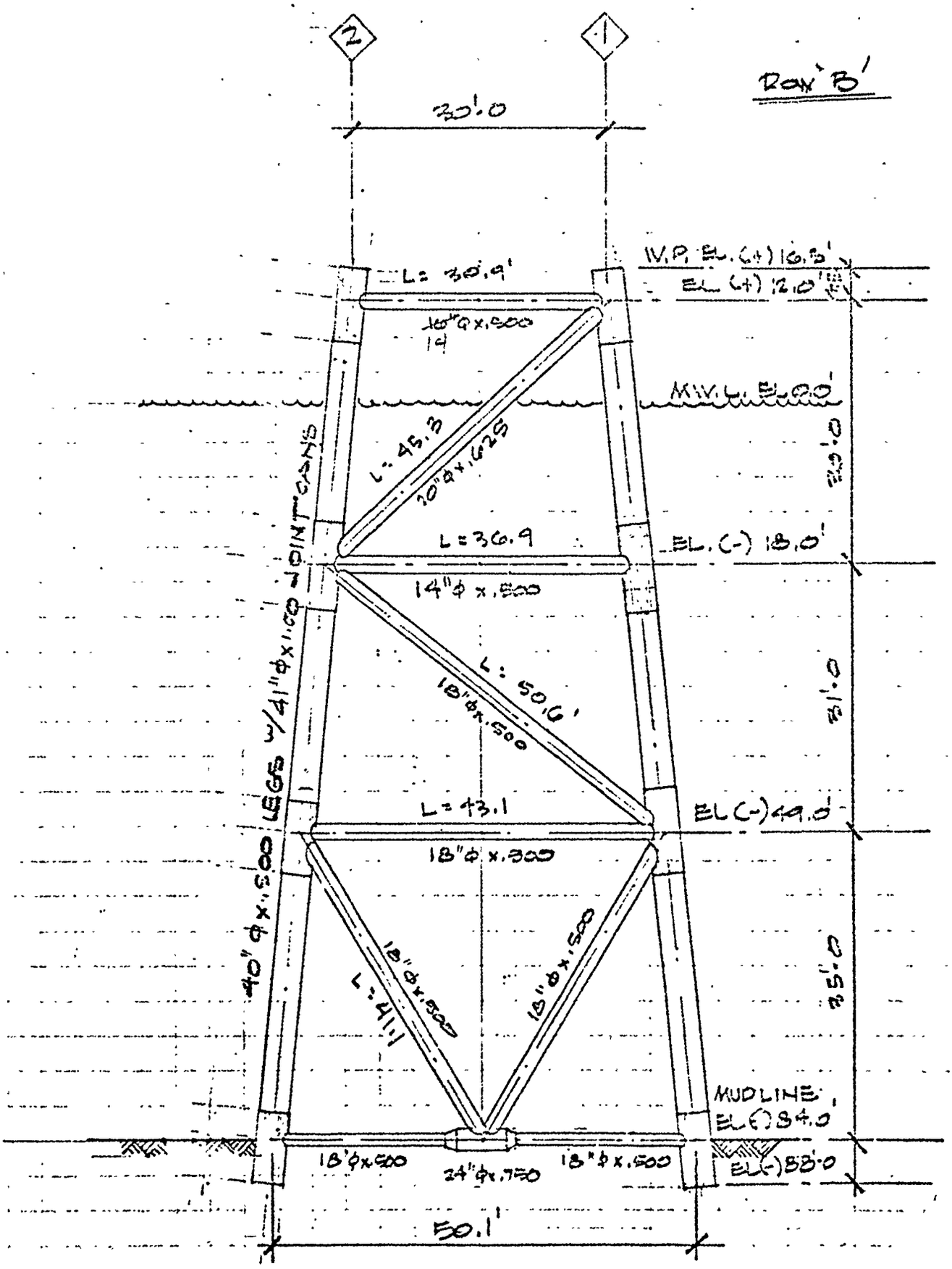

CREST OFFSHORE, INC.

Sheet 5.04 of 4 Pages

By JKVS Client U.S. NAVY Subject STRUCTURAL CONCEPT ANALYSIS

Date 4-16-79 Job No. 3-771-92 Calculation STRUCTURAL CONFIGURATION

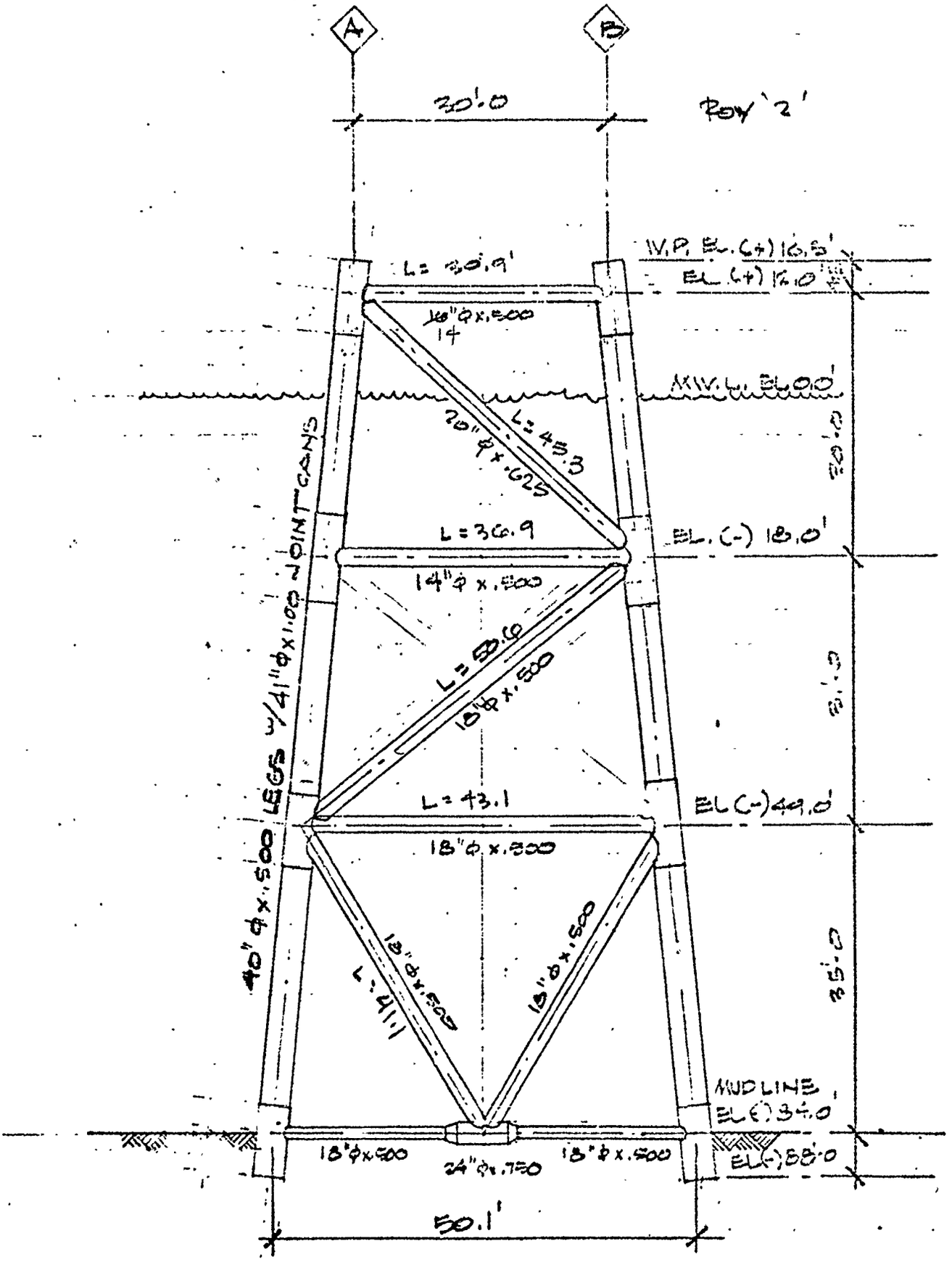

CREST OFFSHORE, INC.

Sheet 3.05 - 4 PILE

By JWS Client U.S. NAVY Subject STRUCTURAL CONCEPT ANALYSIS

Date 4.6.76 Job No. 41-771-121 Calculation STRUCTURAL CONFIGURATION

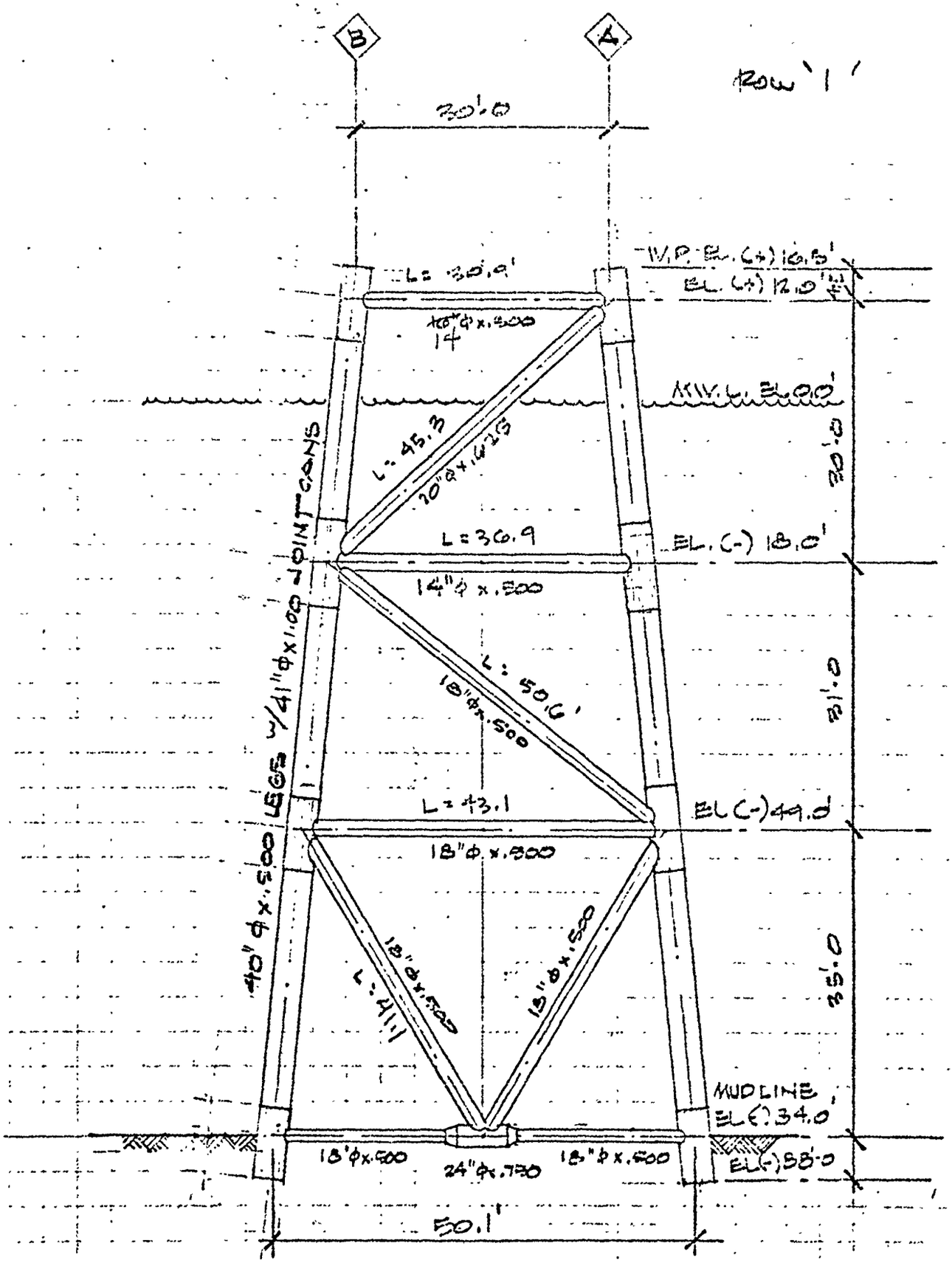

CREST OFFSHORE, INC.

Sheet 5.06 of 4 PLUS

By WA Client U.S. NAVY Subject STRUCTURAL CONCEPT ANALYSIS

Date 4-7-76 Job No. 27-771-92 Calculation STRUCTURAL CONFIGURATION

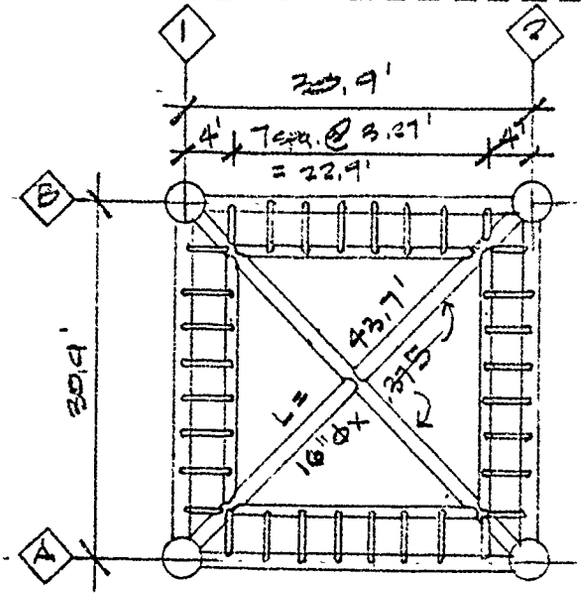

PLAN @ ELEV. (+) 12'

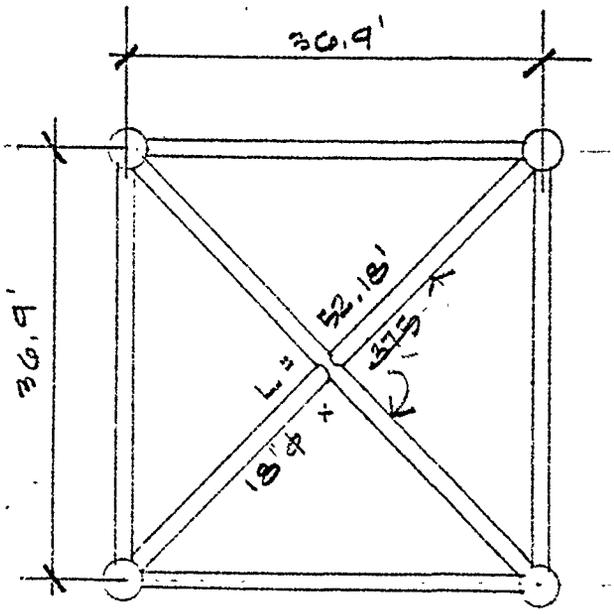

PLAN @ ELEV (-) 18'

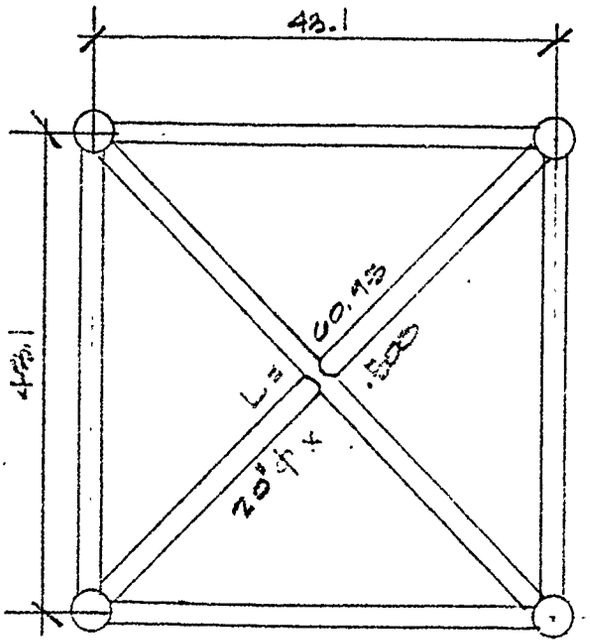

PLAN @ EL. (-) 49'

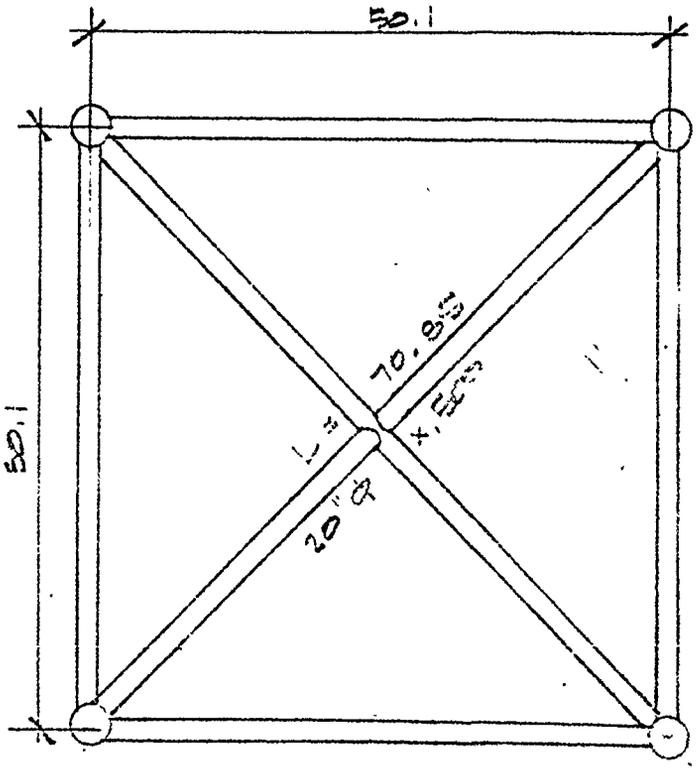

PLAN @ EL (-) 34'

CREST OFFSHORE, INC.

Sheet 5.07 of 4 FILE

By WA Client U.S. NAVY Subject STRUCTURAL CONCEPT ANALYSIS

Date 4-7-92 Job No. 27-771-92 Calculation STRUCTURAL CONFIGURATION

TABLE 4P5-1 $\frac{KL}{r}$ RATIO'S for BRACING MEMBERS

LOCATION	MEMBER SIZE	K	L	r	$\frac{KL}{r}$
	14"ϕ x .500	0.7	30.9	4.32	54 ✓
HOR. BRACING	16" ϕ x .500	0.7	30.9'	5.484	47
	12¾" ϕ x .500	"	36.9'	4.335	72 ✓
	18" ϕ x .500	"	43.1'	6.191	58 ✓
	18" ϕ x .500	"	25'	6.191	34 ✓
DIAG. BRACING	20" ϕ x .625	0.8	45.3	6.855	63 ✓
	18" ϕ x .500	"	50.6	6.191	78 ✓
	18" ϕ x .500	"	41.1	6.191	64
INT. X-BRACING	14" ϕ x .375	0.8	43.7'	4.820	87
	14" ϕ x .375	"	52.18'	4.820	104
	18" ϕ x .500	"	60.95'	6.191	95
	18" ϕ x .500	"	70.85'	6.191	110
elev. 42	16" ϕ x .500	"	43.7	5.484	76 ✓
	16" ϕ x .500	"	52.18	5.484	91
elev -49	20" ϕ x .500	"	60.95	6.897	85 ✓
	20" ϕ x .500	"	70.35	6.897	99
elev -18	18" ϕ x .500	"	52.18	6.19	81 ✓
elev. -84	20" ϕ x .500	"	36	6.897	50 ✓

5.8

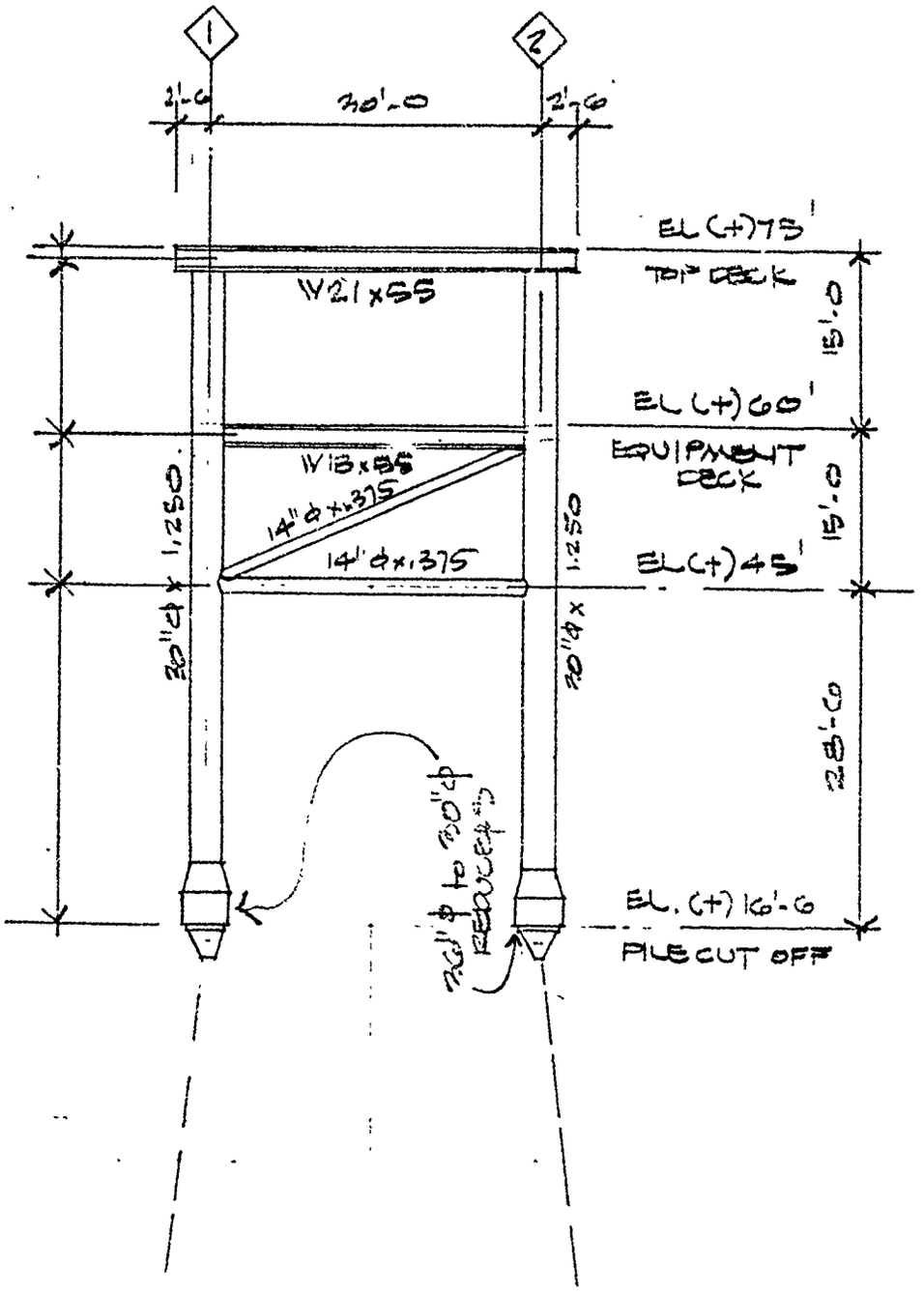

SUPER STRUCTURE ELEVATION

5.4 DECK LAYOUTS

LOADINGS
UPPER DECK 100 PSF
LOWER DECK 150 PSF

USE 30'x30' BAY SPACING
30"ϕ COLUMNS

PRELIMINARY BEAM SIZING - DOES NOT INCLUDE WIND LOADING

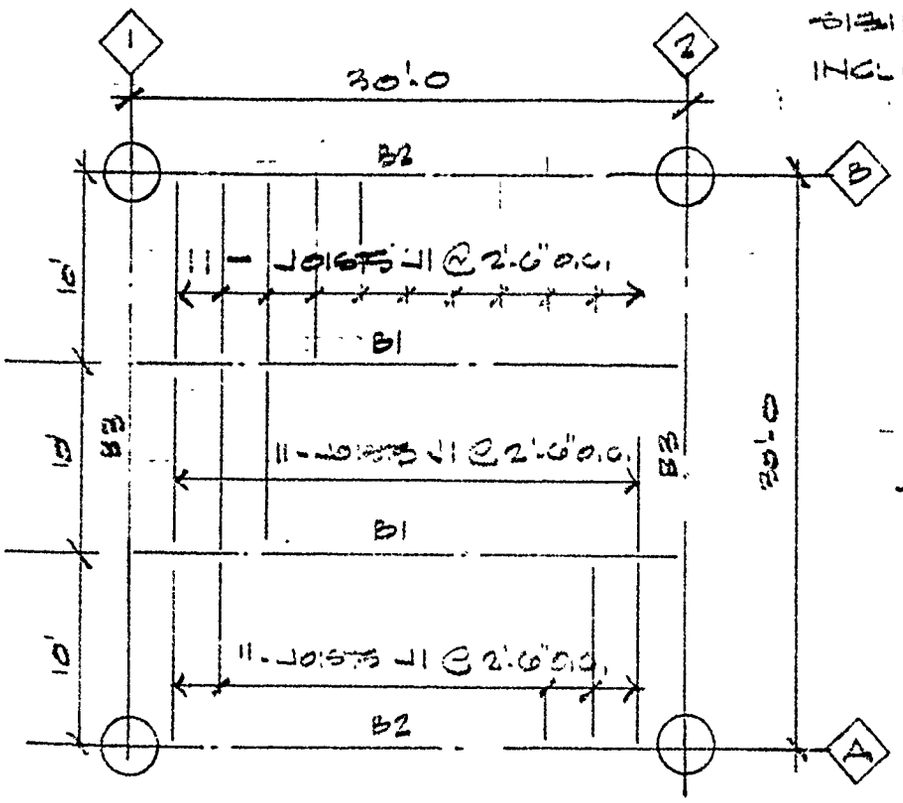

UPPER DECK FRAMING PLAN

DEAD LOAD
4" GRID ⏊ = 10.2 PSF
JOISTS = 1.8 "
MISC. = 3.0 "
15 "
LIVE LOAD = 100 PSF
TOTAL LOAD = 115 PSF

BEAM B1

$w = 10' \times 0.115 + 0.04 = 1.19$

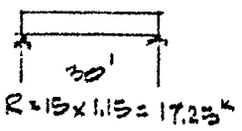

$M = 1.19(30)^2/8 = 133.9^{IK}$

$S_R = 133.9 \times 12/24 = 66.9 in^3$

A allowable $= L/240 = \frac{30 \times 12}{240} = 1.5"$

$I_R = \frac{5(1.19)(30)^4 1.725}{384 \times 29 \times 1.5} = 498.6 in^4$

try W18x40 w/ $S_x = 68.4 in^3$ $L_c = 6.4$
$I_x = 612 in^4$

BEAM B2 $\quad w = 115\ PSF \times 5' + 40 = 615\ \#/'$

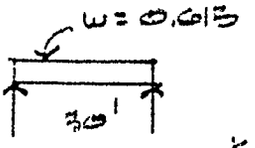

$R = 15 \times .615 = 9.23^k$

$M = 0.615(30)^2/8 = 69.2^{'k}$

$S_R = 69.2 \times 12/24 = 34.6\ in^3$

$I_R = \dfrac{5(.615)(30)^4\ 1728}{384 \times 29 \times 1.5} = 257.7\ in^4$

try W 16x26 w/ $S_x = 38.3$ $\quad L_c = 5.6'$

$I_x = 340$

BEAM B3

$w = 1.25' \times 115\ PSF + 40 = 183.75\ \#/'$

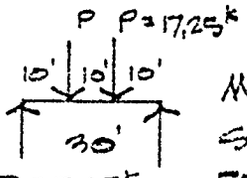

$R = 17.25^k$

$M = 17.25^k \times 10' + 0.184(30)^2/8 = 172.5^{'k} + 20.7 = 193.2^{'k}$

$S_R = 193.2 \times 12/24 = 96.6\ in^3$

$FEM = -\dfrac{2Pa}{9} = -\dfrac{2(17.25)(30)}{9} = 115^{'k}$ $\qquad +M = 193.2$

$+wL^2/12 = 0.184(30)^2/12 = 13.8$ $\qquad -128.8$

$128.8^{'k}$ $\qquad +64.4^{'k}$

USE W 21x55 w/ $S_x = 95.4\ in^3$

$L_c = 8.7$

$L_u = 9.5$

CREST OFFSHORE, INC.

Sheet 5.1L of 4 PILE

By JWA Client U.S. NAVY Subject STRUCTURAL CONCEPT ANALYSIS
Date 4-6-76 Job No. 27-771-92 Calculation STRUCTURAL CONFIGURATION

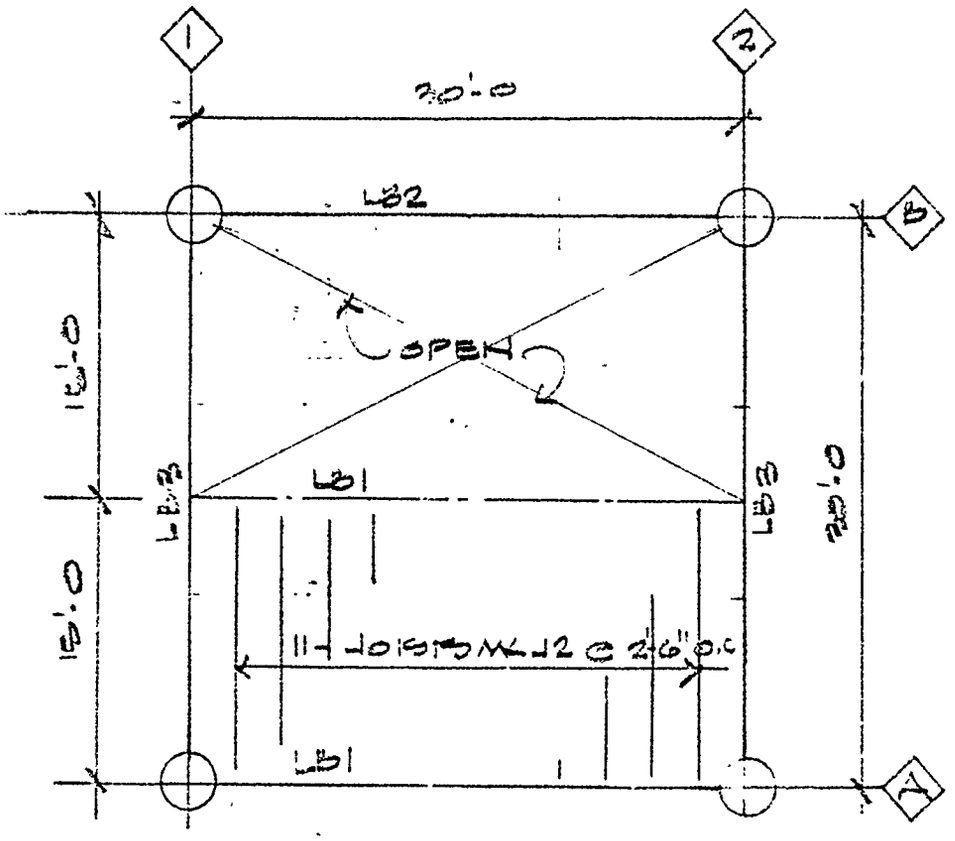

DEAD LOAD
4" CKR'D R: 10.2 PSF
JOISTS = 1.8"
MISC = 3.0"
15.0 PSF
LIVE LOAD = 150 PSF
TOTAL LOAD = 165 PSF

LOWER DECK FRAMING PLAN

BEAM LB1

$w = 165\,\#/SF \times 7.5' + 40 = 1{,}277.5\,\#/'$

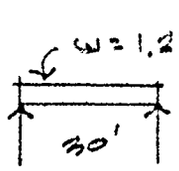

$M = 1.278(30)^2/8 = 143.8^{'K}$ (simple)

$S_R = 143.8 \times 12/24 = 71.9\ in^3$

$FEM = 1.278(30)^2/12 = 95.85$

$+M = 143.8 - 95.9 = 47.9^{'K}$

$R = 1.278 \times 15 = 19.17$

$S_R = 47.93\ in^3$

BEAM LB3

$w = 1.25 \times 165 + 40 = 246$

$M = 19.17(30)/4 + 0.246(30)^2/8 = 171.4^{'K}$ (simple)

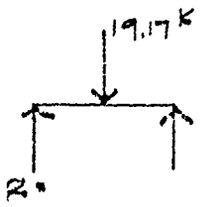

$S_R = 85.7\ in^3$

$FEM = -PL/8 - wL^2/12 = -19.17(30)/8 - .246(30)^2/12 = -90.3$

$+M = 171.4 - 90.3 = 81.1$

$S_R = 90.3 \times 12/24 = 45.15$

USE W 18 x 55 w/ $S_x = 98.4$ $L_c = 8.0$
FOR LB1, LB2, LB3 $L_u = 12.1$

SECTION 6

50 FT JACKET BASE SPACING

6.1 INTRODUCTION

The idealized structural model is shown in Section 6.2 with the joint numbers, member numbers and directions. In order to simulate the behavior of the platform structure, fictitious wishbone members are introduced to connect the jacket leg joints and the piles. These members are coded not to take any wave forces. They will be ignored by SEALOAD but are necessary for STRAN. The dead load report from SEALOAD will, however, include weights for the wishbones which will have to be subtracted out for the computations of the laterally loaded pile.

Section 6.3 gives the direction of wave and wind loading data.

All information was coded on keypunch forms, cards were punched and assembled with the cards from Section 2 'Grid Wave Data' to form a complete SEALOAD deck. A computer run was made and the results saved on a tape. Section 6.4 shows the input information and the load summary reports of that run.

CREST OFFSHORE, INC.

Sheet 6.02 of 1 PILE

By JWA Client U.S. NAVY Subject STRUCTURAL CONCEPT ANALYSIS
Date 1-16-76 Job No. 27-771-92 Calculation STRUCTURE W/L = 50 FT

6.2 IDEALIZED STRUCTURE

ROW A

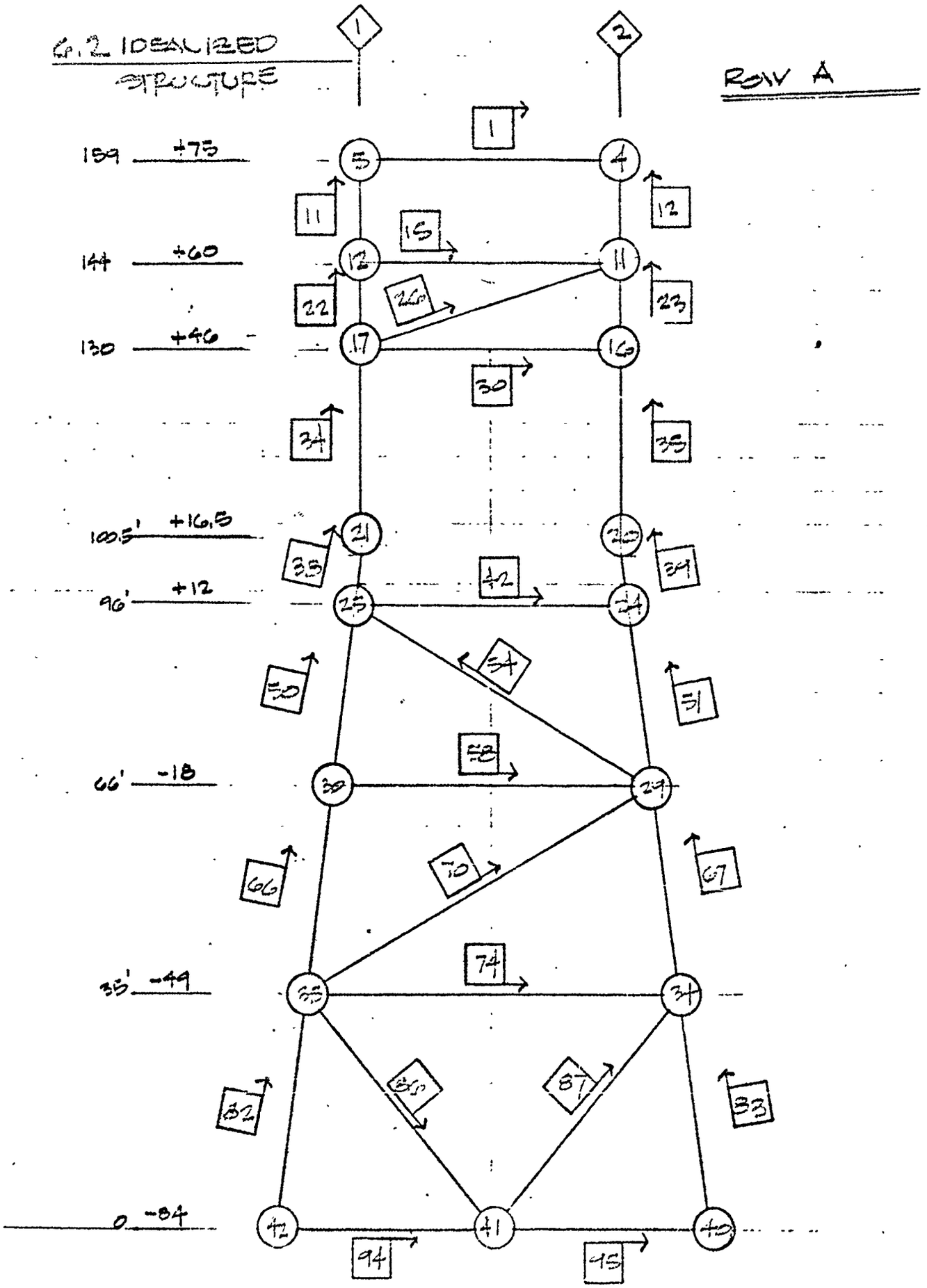

CREST OFFSHORE, INC.

Sheet 6.03 of 7 PILE

By WSA Client U.S. NAVY Subject STRUCTURAL CONCEPT ANALYSIS

Date 4-6-72 Job No. 27-771-92 Calculation STRUCTURE W/L = 50 FT

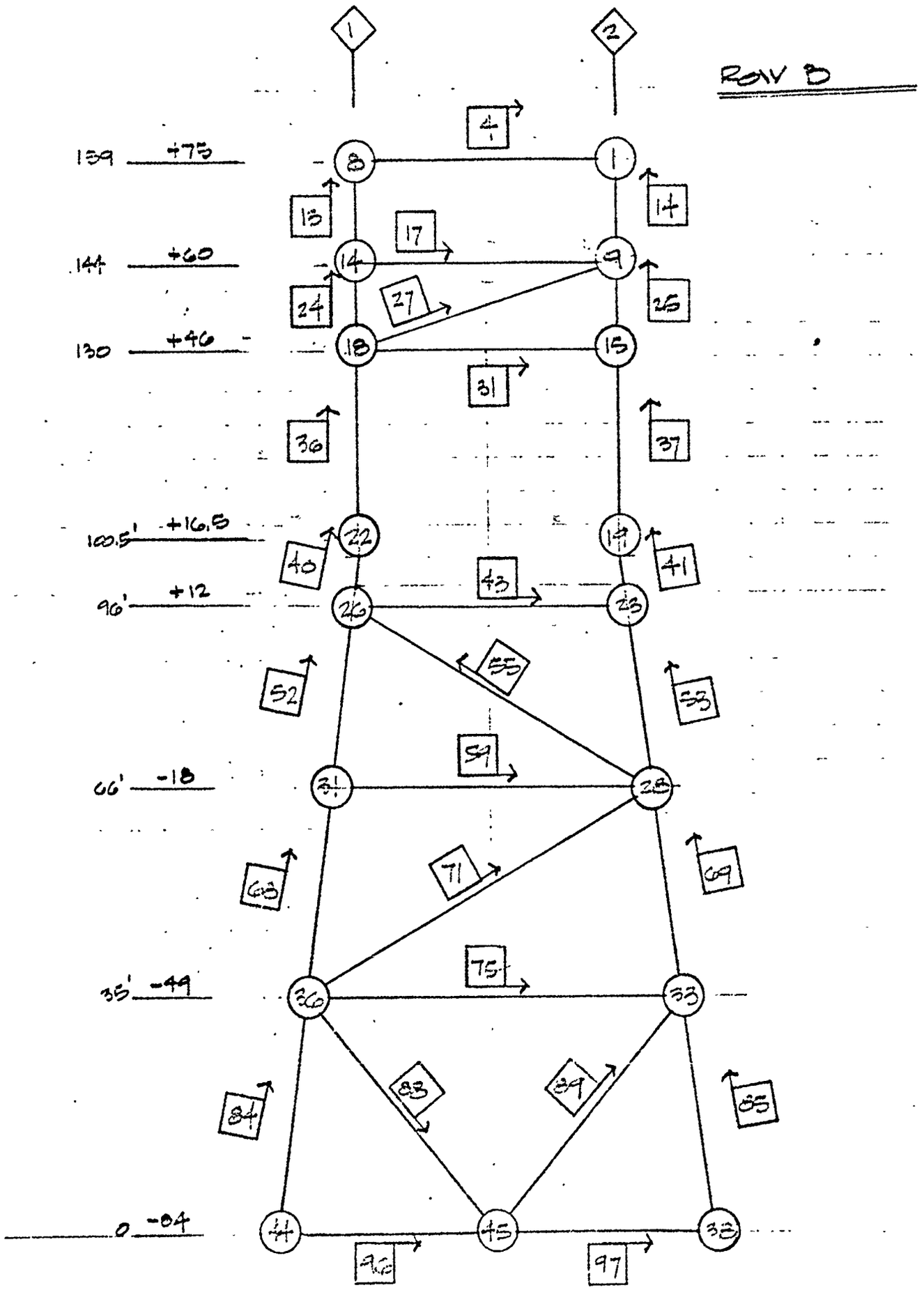

CREST OFFSHORE, INC.

Sheet 6.04 of 4 PLE

By WWS Client U.S. NAVY Subject STRUCTURAL CONCEPT ANALYSIS

Date 4-6-76 Job No. 27-771-92 Calculation STRUCTURE W/L=80'

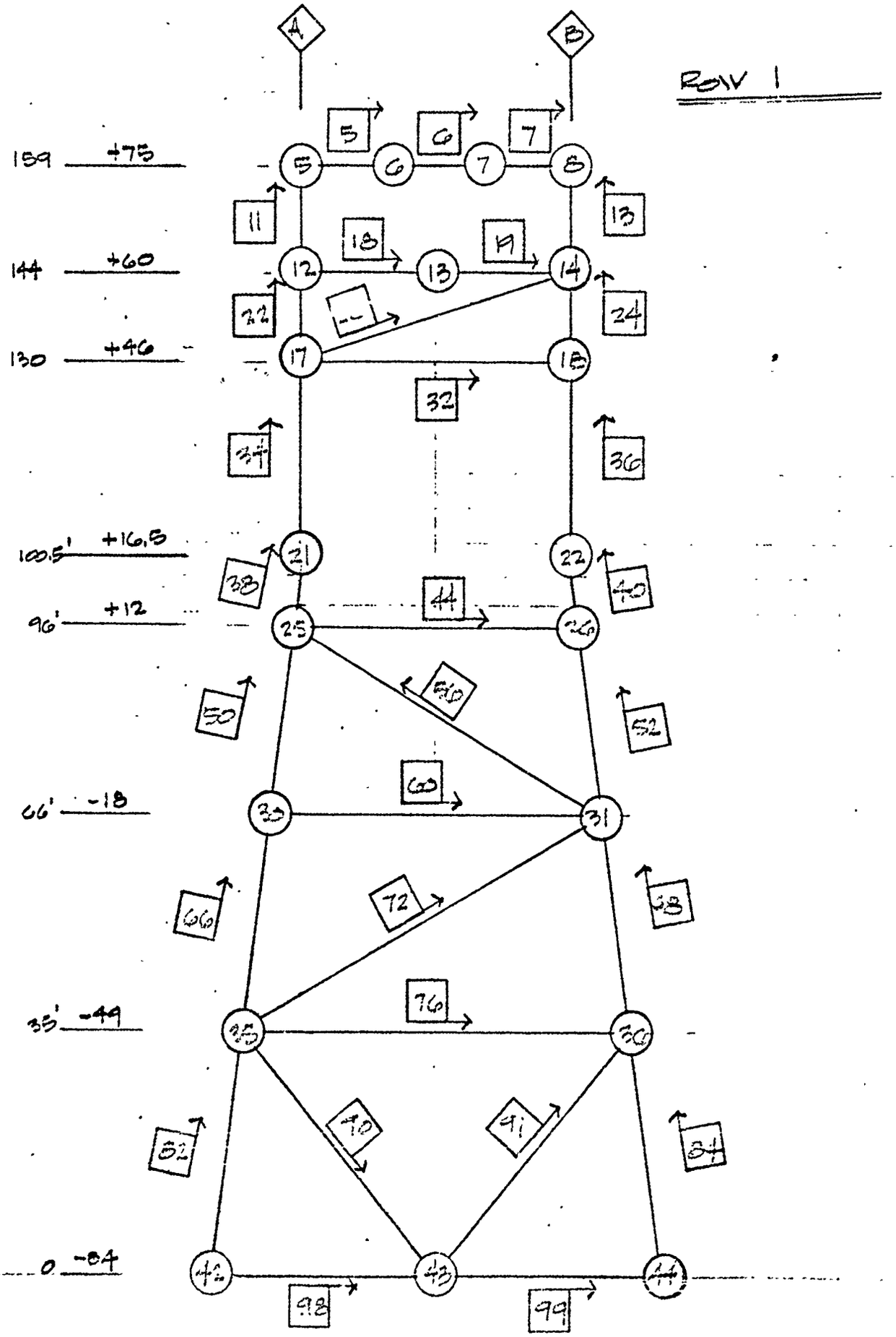

CREST OFFSHORE, INC.

Sheet 25 of 1 PLE

By WWA Client U.S. NAVY Subject STRUCTURAL CONCEPT ANALYSIS

Date 4-6-76 Job No. 27-771-92 Calculation STRUCTURE W/L = 50'

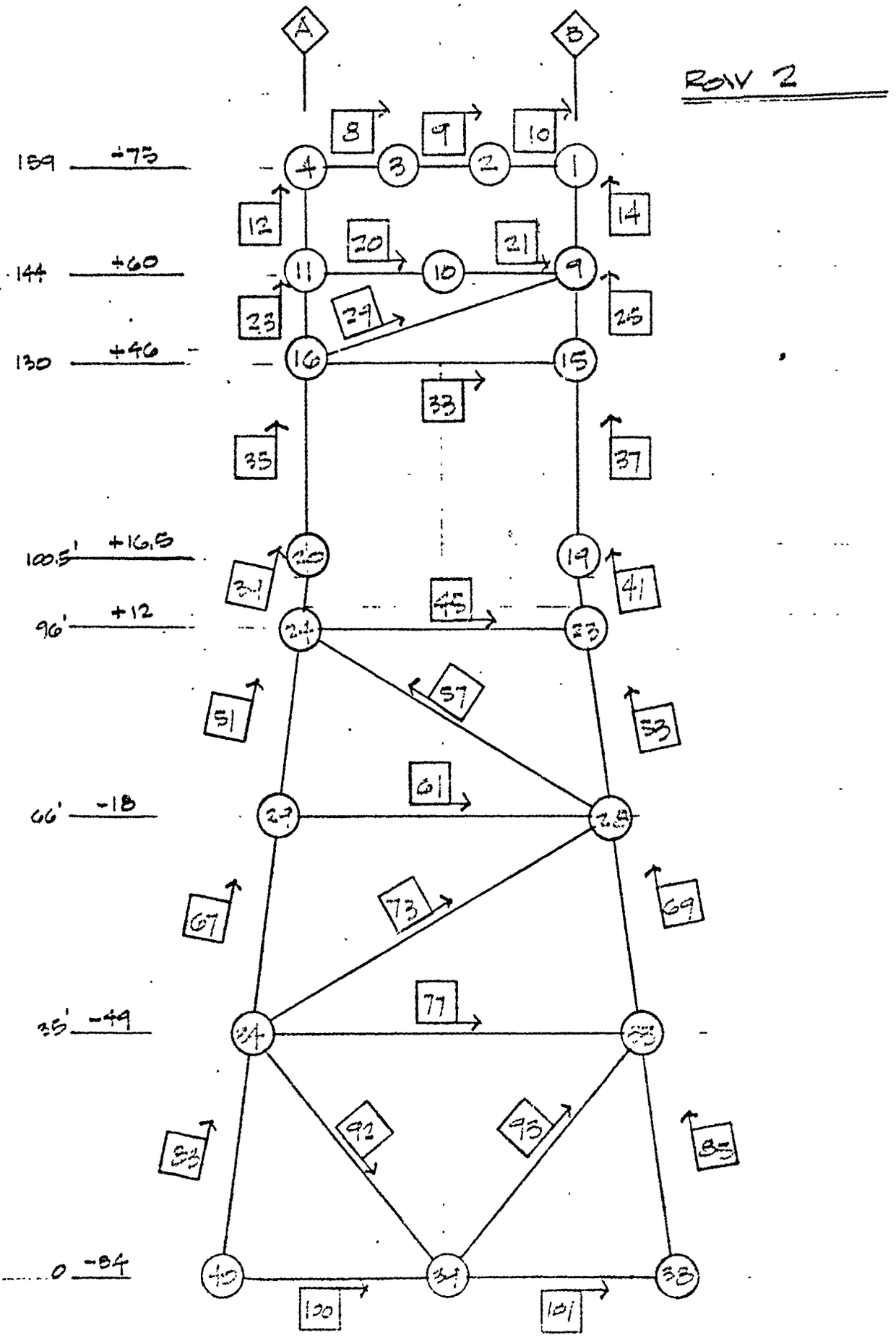

CREST OFFSHORE, INC.

Sheet 6.26 of 4 PILES

By WWS Client U.S. NAVY Subject STRUCTURAL CONCEPT ANALYSIS

Date 4-6-76 Job No. 27-771-92 Calculation STRUCTURE w/ L = 50'

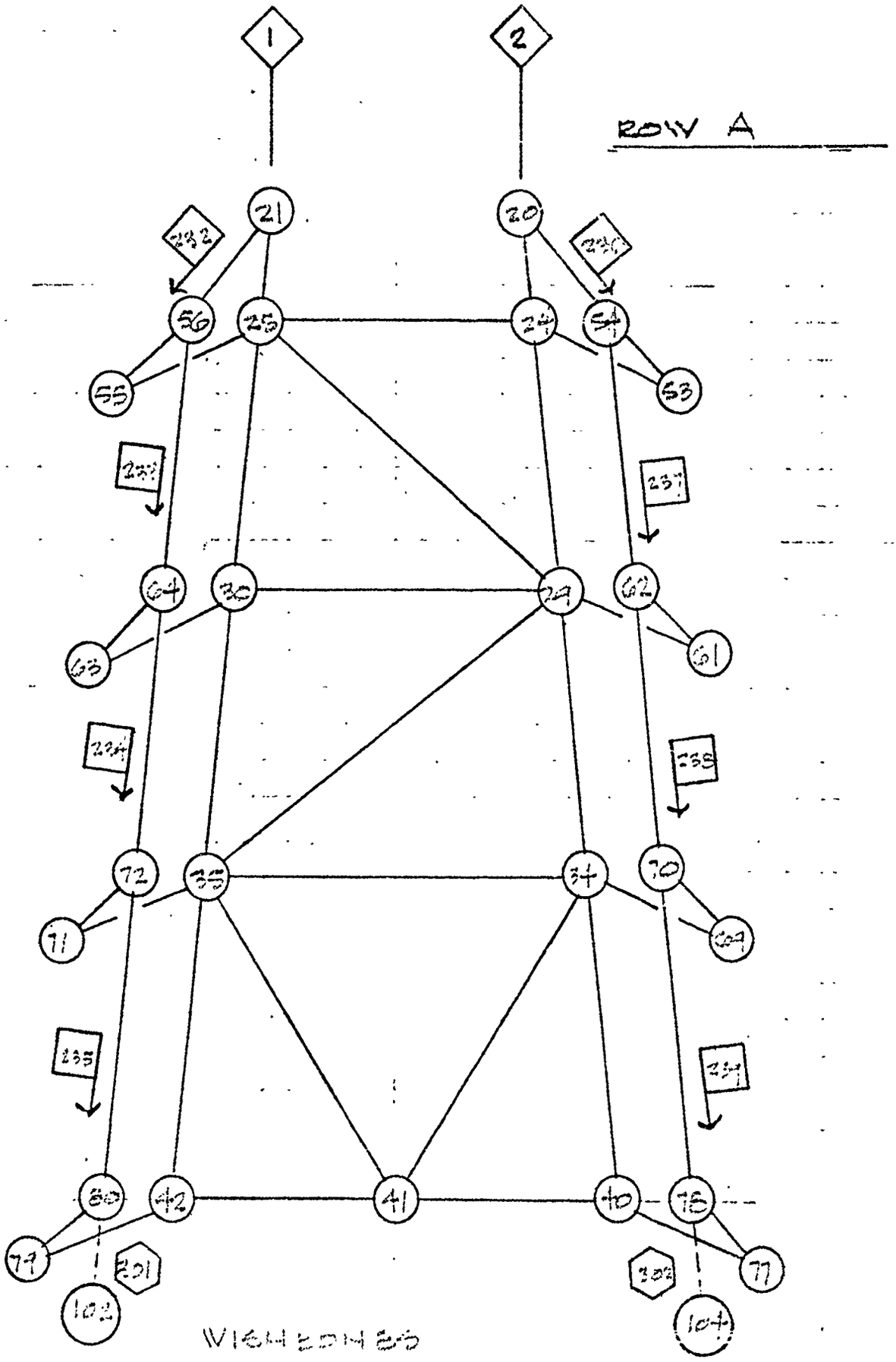

CREST OFFSHORE, INC.

Sheet 6.07 of 4 PILES

By WWS Client U.S. NAVY Subject STRUCTURAL CONCEPT ANALYSIS

Date 4-4-76 Job No. 27-771-92 Calculation STRUCTURE W/ L = 50'

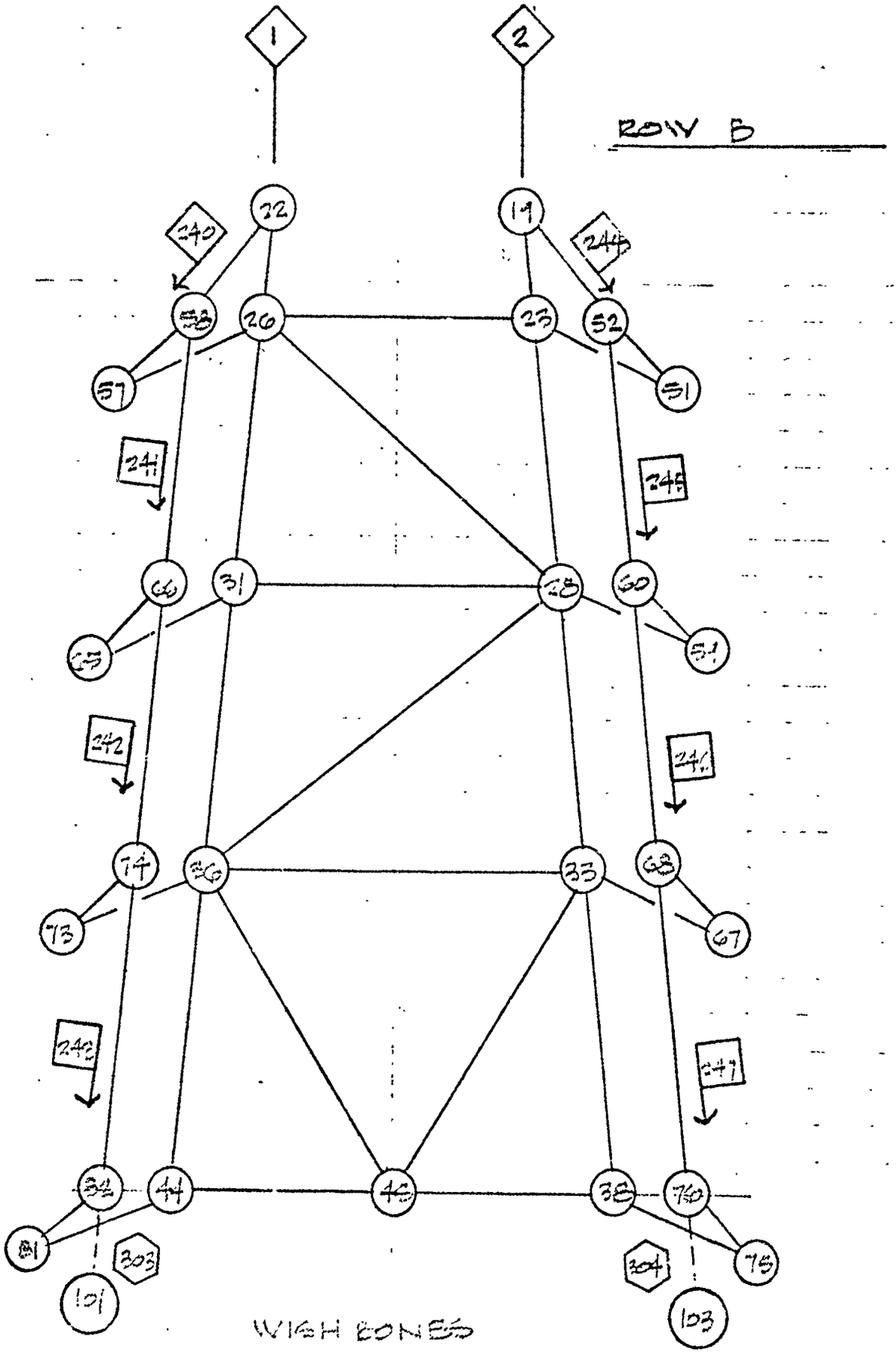

CREST OFFSHORE, INC.

Sheet 6.0B of 4 FILE

By WA Client USL HAYT Subject STRUCTURAL CONCEPT ANALYSIS

Date 1-7-78 Job No. 21-771-92 Calculation STRUCTURES W/ L = 50'

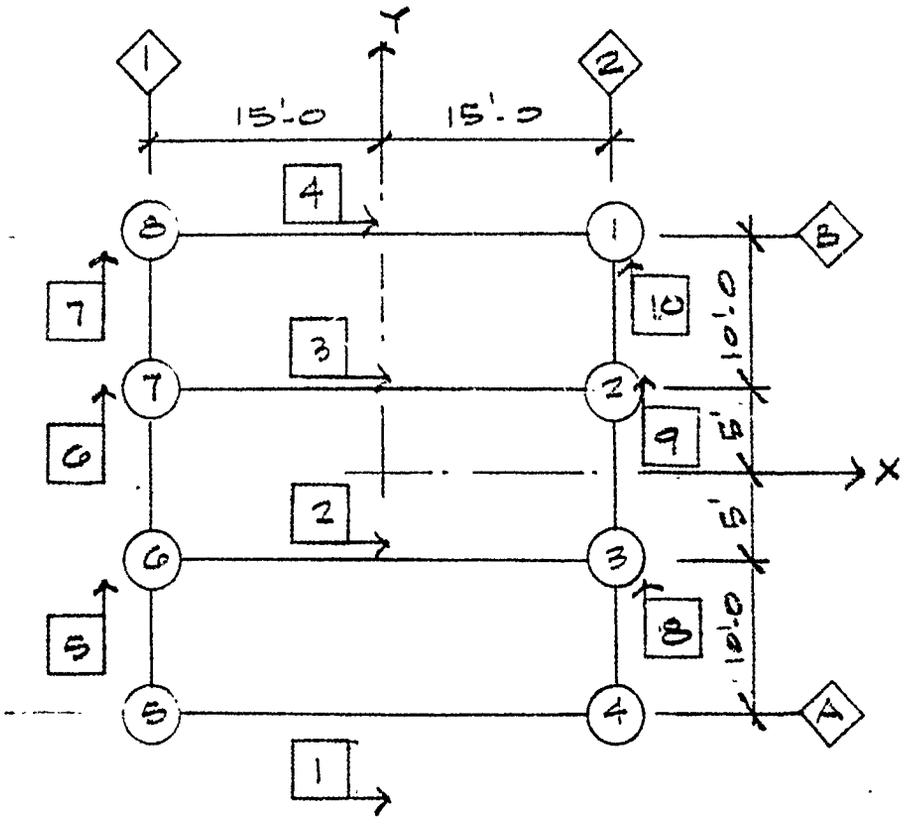

ELEV. (+) 75'-0 (+159)

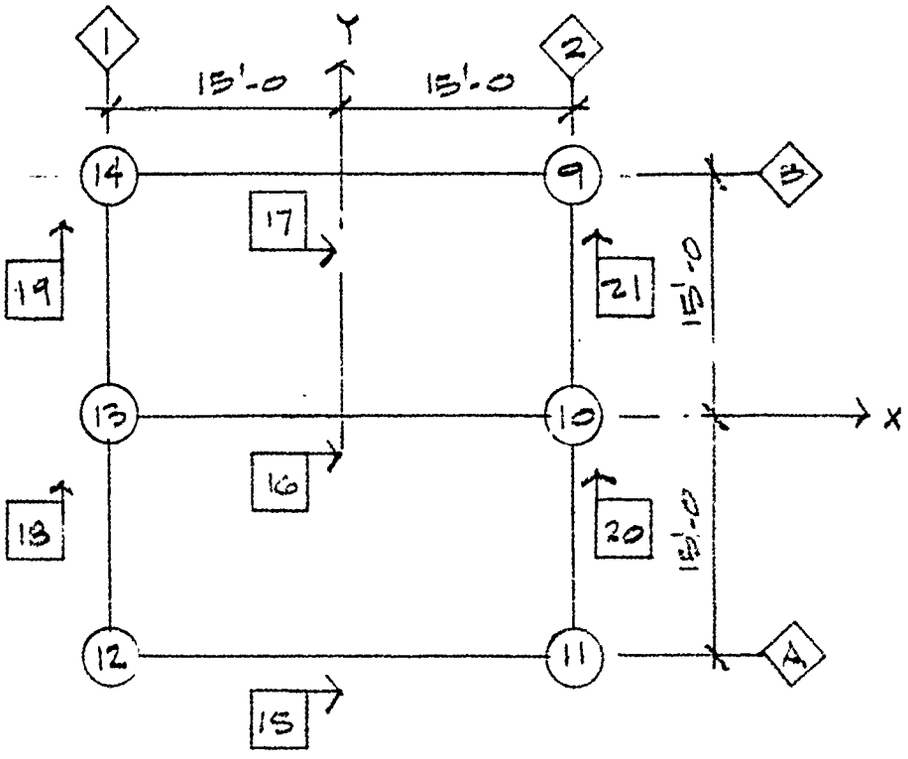

ELEV. (+) 60 (144)

CREST OFFSHORE, INC.

Sheet 6.09 of 7 FILE

By JWA Client U.S. NAVY Subject STRUCTURAL CONCEPT ANALYSIS
Date 4-7-76 Job No. 27-171-92 Calculation STRUCTURE W/L = 50'

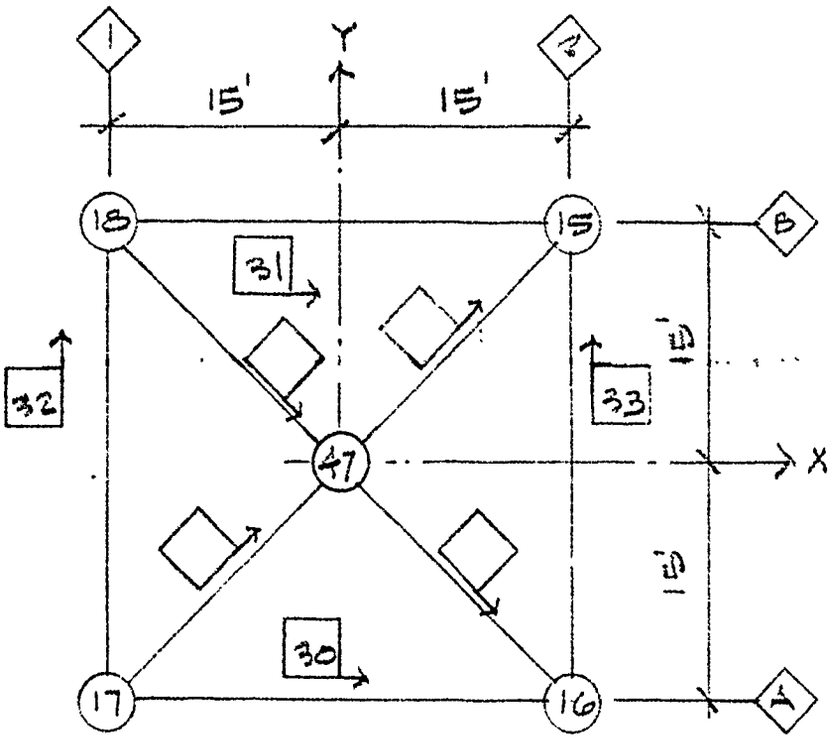

ELEV. (+) 4.0' (130)

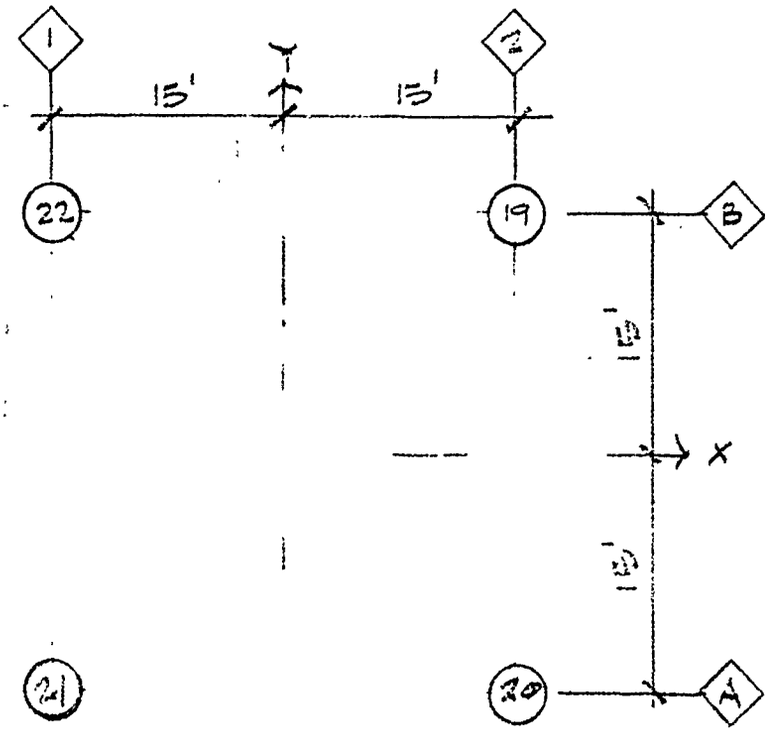

ELEV. (+) 6.5 (120.5)

CREST OFFSHORE, INC.

Sheet 6-10 of 4 PIES

By WS Client U.S. NAVY Subject STRUCTURAL CONCEPT ANALYSIS

Date 4-7-76 Job No. 21-11-92 Calculation STRUCTURE Y L = 50'

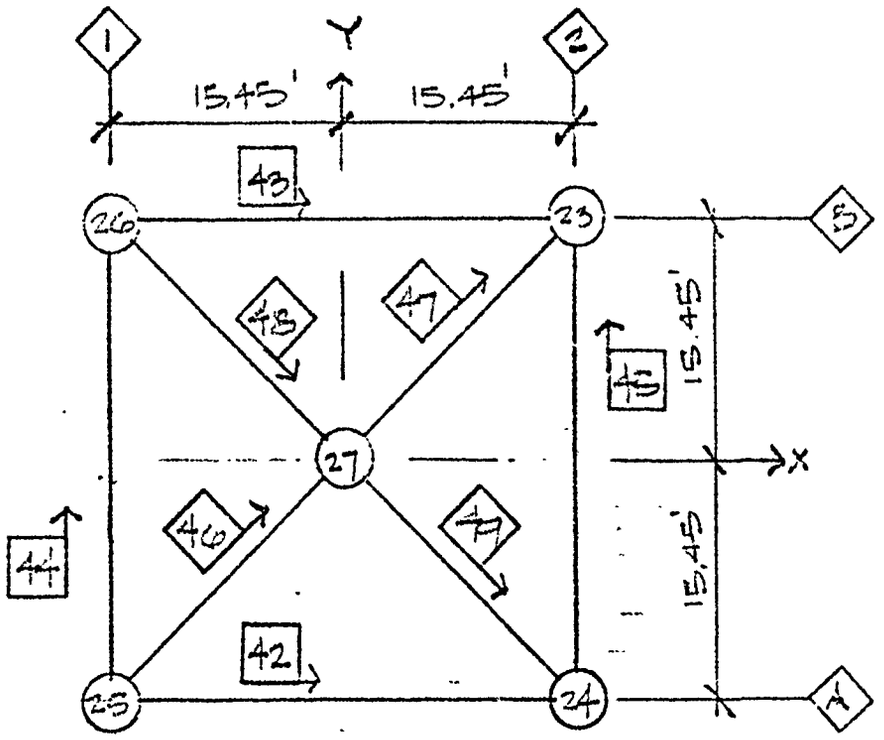

ELEV. (+) 12 (96)

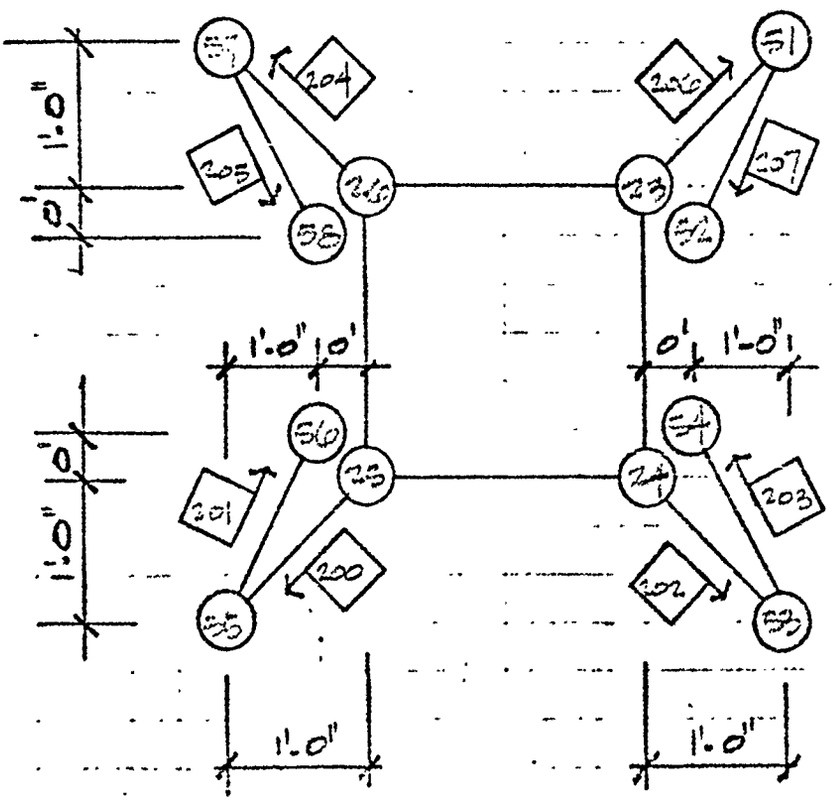

CREST OFFSHORE, INC.

Sheet 6.1.1 of 4 Pl. 2

By WAS Client U.S. NAVY Subject STRUCTURAL CONCEPT ANALYSIS

Date 4-1-92 Job No. 21-111-92 Calculation STRUTS W/ L = 50'

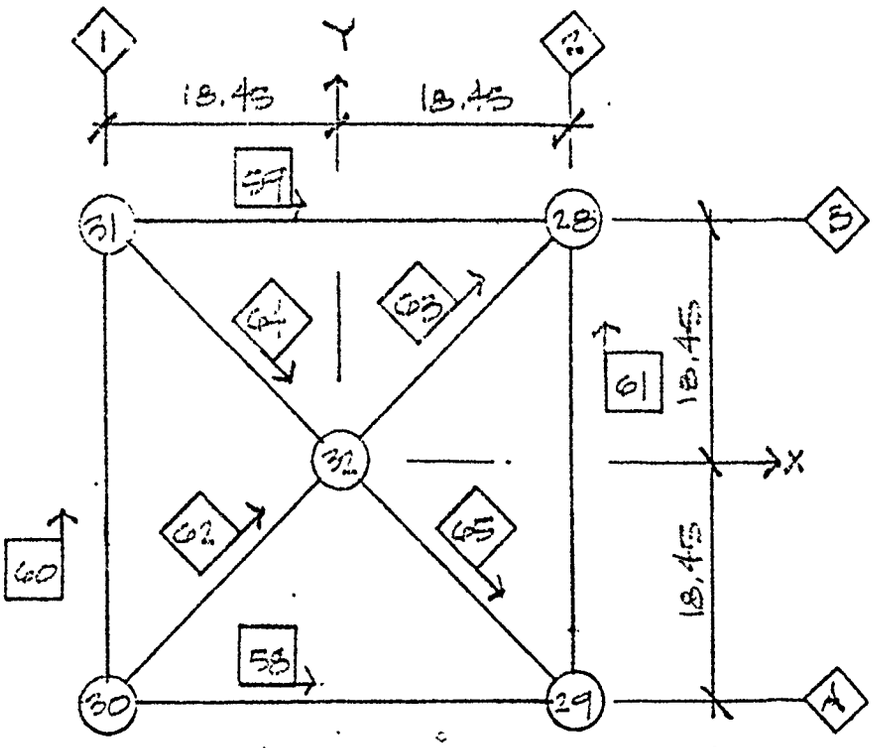

ELEV. (-) 18 (GR)

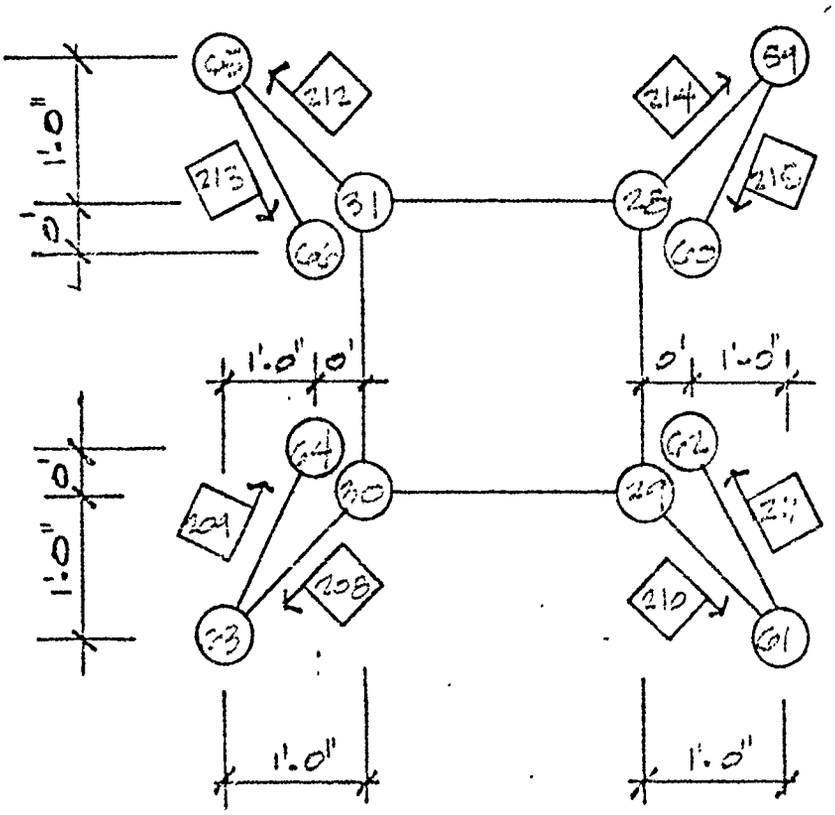

CREST OFFSHORE, INC.

Sheet 6.12 of 4 PIES

By WS Client U.S. NAVY Subject STRUCTURAL CONCEPT ANALYSIS

Date 4-7-76 Job No. 21-111-92 Calculation STRUCTURE Y/L = 50'

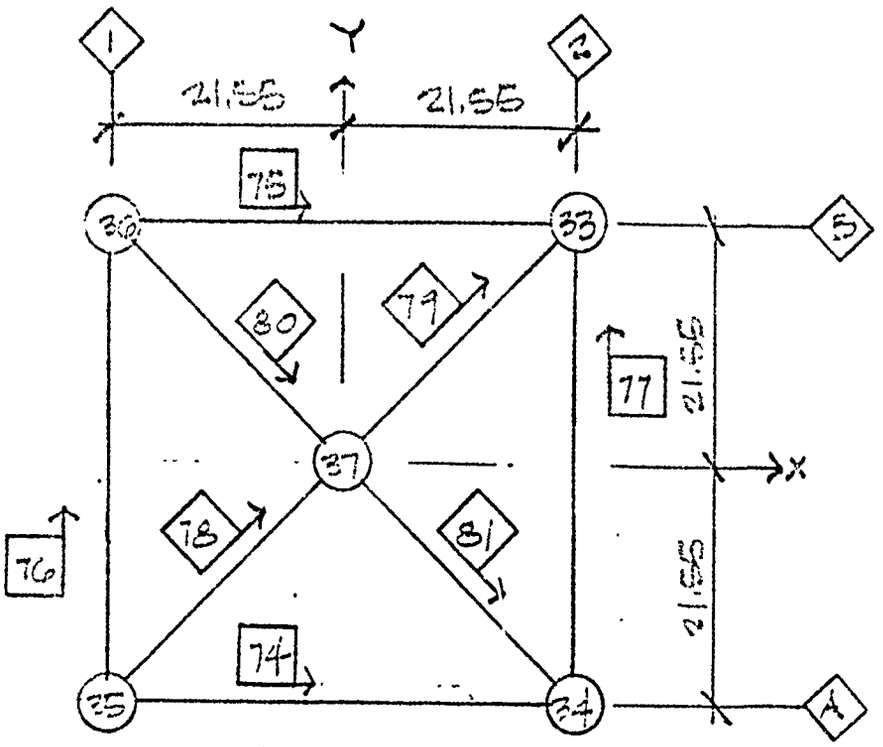

ELEV. (-) 49 (35)

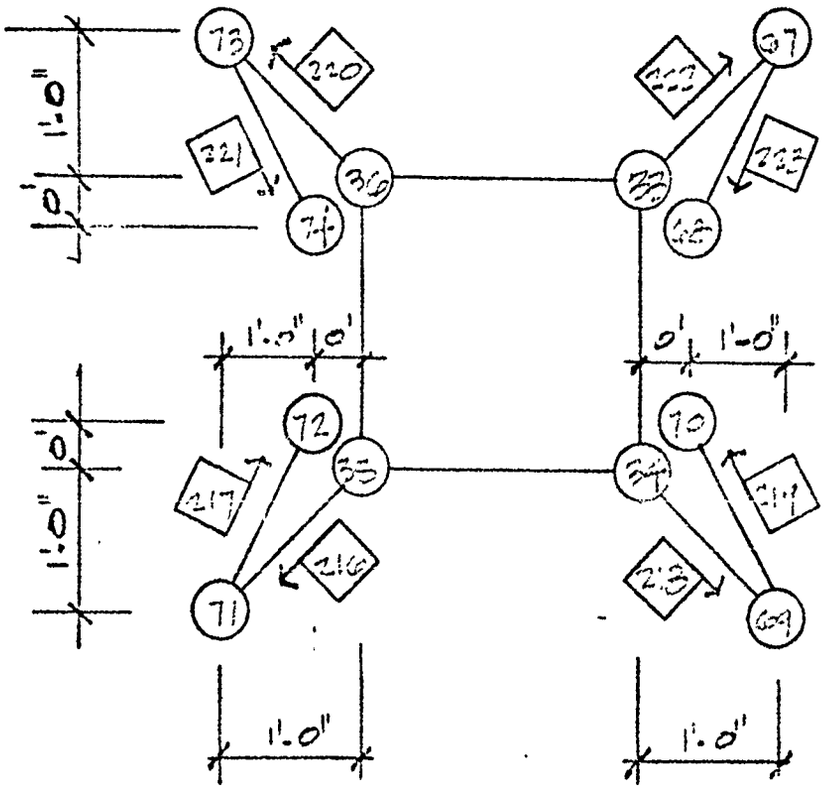

CREST OFFSHORE, INC.

Sheet 612 of 4 PIES

By WWS Client U.S. NAVY Subject STRUCTURAL CONCEPT ANALYSIS

Date 4-7-76 Job No. 21-771-92 Calculation STRUCTURE W/ L = 50'

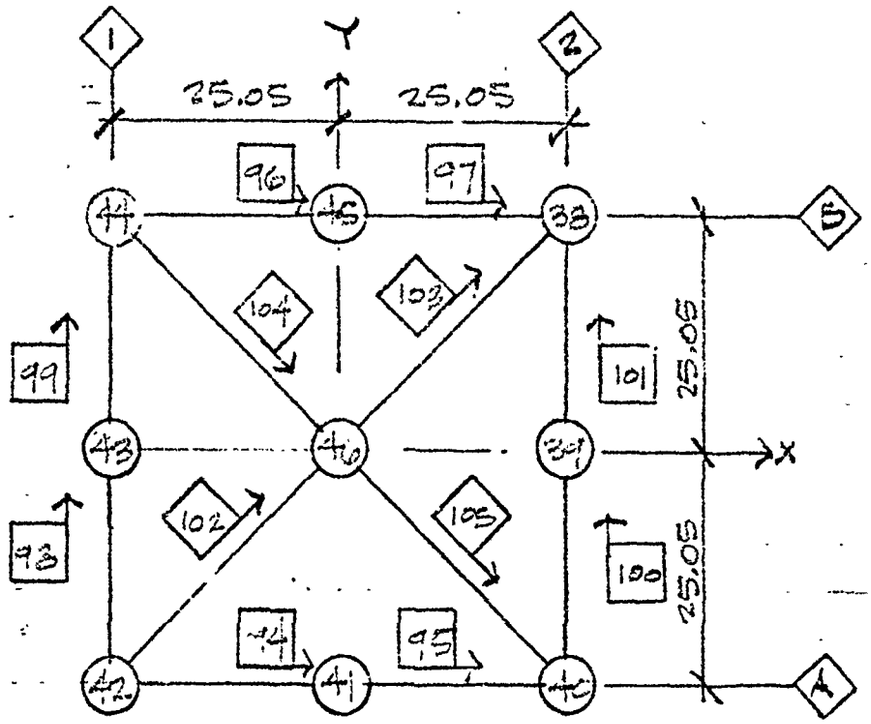

ELEV. (-) 84 (0)

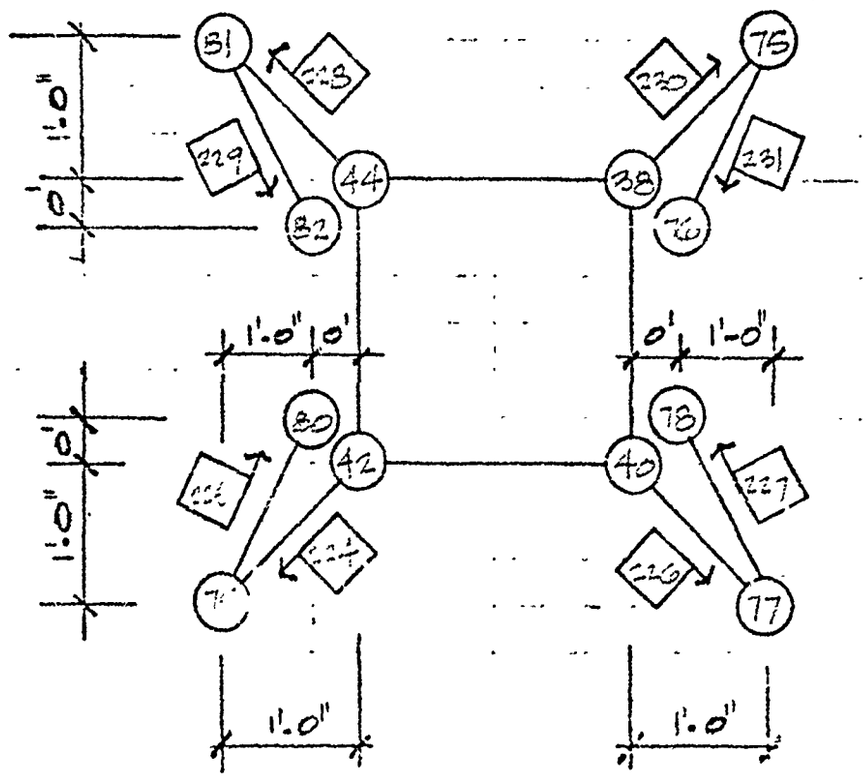

CREST OFFSHORE, INC.

Sheet 6.14 of 4 PILE

By JWS Client U.S. NAVY Subject STRUCTURAL CONCEPT ANALYSIS

Date 4-7-76 Job No. 21-771-92 Calculation STRUCTURE W/ L=50'

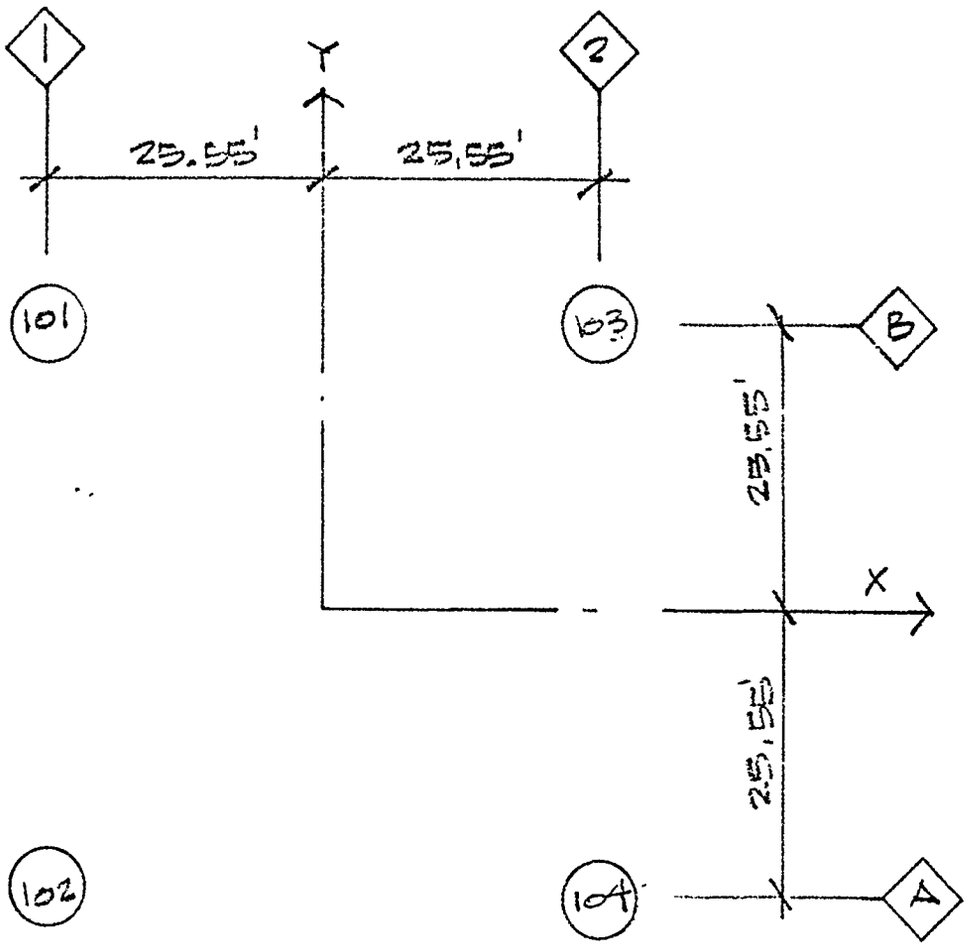

ELEV. (..) 89 (-5)

2.3 WIND & WAVE DIRECTIONS

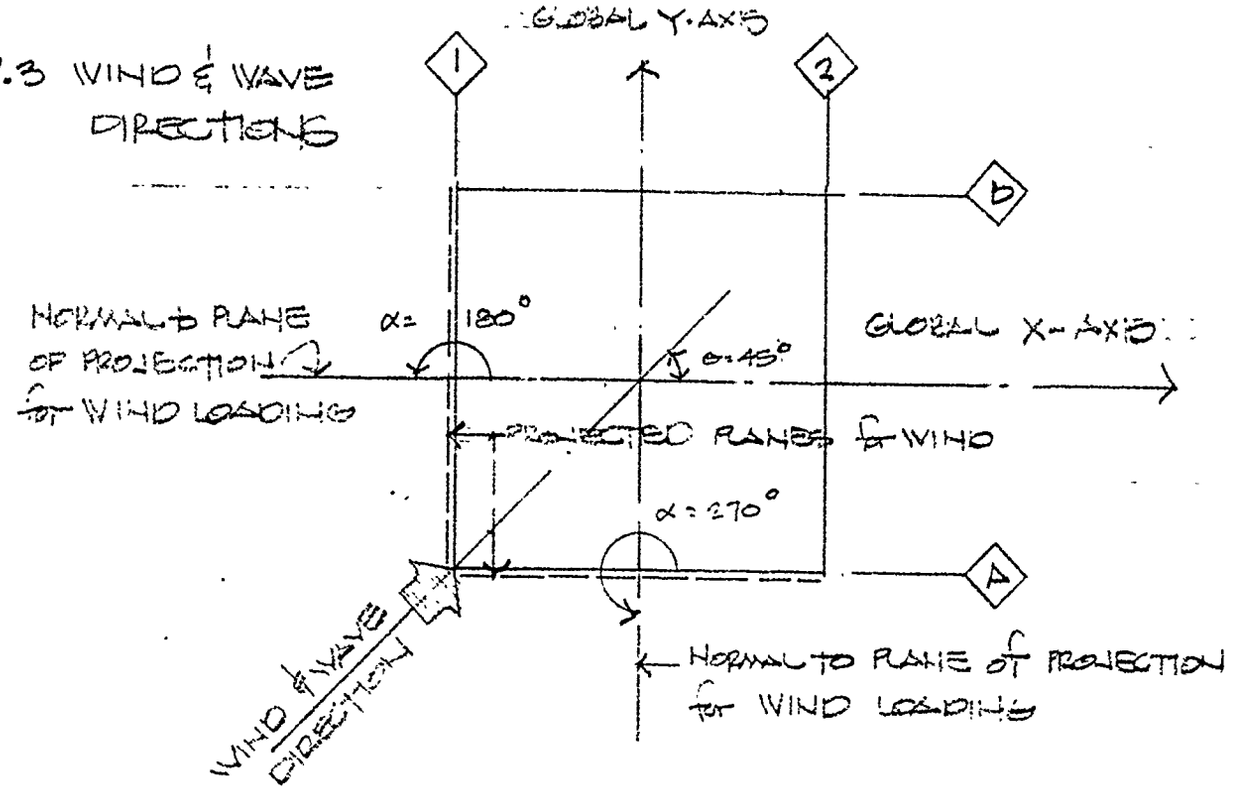

WIND LOADING

AREAS TO CONSIDER

FENCE or SAFETY NET = 2' x 40' = 80 S.FT.

AREA BETWEEN DECKS = 15' x 40' x 0.50 = 300 S.FT.

WIND VELOCITY = 173 MPH

CREST OFFSHORE, INC.

By LMS Client USHBY Subject STRUCTURAL CONCEPT ANALYSIS

Date 4-15-76 Job No. 27-771-02 Calculation 1"=50' Sheet 6-16 of 17

6.4 SEALOAD COMPUTER RUN

```
*****************************************
*                                       *                                  PAGE    1
*            SEALOAD-2                  *
*                                       *
*   DEVELOPED BY SYNERCOM TECHNOLOGY, INC.
*            HOUSTON, TEXAS             *
*          RELEASE 2 MOD 11             *
*            MARCH 1976                 *
*                                       *
*****************************************

                   1    1    2    2    3    3    4    4    5    5    6    6    7    7    8
LINE NO.  1....5....0....5....0....5....0....5....0....5....0....5....0....5....0....5....0

  1  COEF   14.0  1.0   0.0  1.0
  2         40.0  1.0   0.0  1.0
  3  END
  4  U.S.NAVY TEMPLET DESIGN - 88 FT MWL              JOB NO. 27-771-00
  5    100 YEAR STORM WAVE - PRESSURE PROFILES(PSF)   4 PILE  THETA = 45DEG
  6    PRELIMINARY DESIGN        ATKINSON             APRIL 1976
  7    STRUCTURE                          JOB NO. 27-771-00
  8  STRAN   1 45  16 24 4 11                  CD 11    0  1                    10 3
  9  END
 10  GRID    14   20              FULL
 11  XSPC     0    6   17   25   33   58   91  570  603  628  636  644  653  661
 12  YSPC   142  140  138  136  133  130  125  120  115  110  105  100   90   80   70
 13          60   40   20    0
 14  YSRF   142  141  139  136  133  119  105  105  119  133  136  139  141  142
 15  SURF   921  920  867  778  674  397  195   33  222  519  646  769  867  921
 16  142    921                                                                921
 17  140    823  845                                                       844  883
 18  138    845  845  844                                            749  797  845
 19  136    798  812  799  778                                 646  709  765  798
 20  133    746  763  754  722  674                       519  599  669  719  746
 21  130    694  718  702  671  641                       494  557  622  676  694
 22  126    624  639  635  611  573                       444  506  562  602  624
 23  120    566  570  570  554  526                       406  459  504  537  566
 24  115    508  518  512  498  478  374            209  367  412  453  488  508
 25  110    456  468  469  455  440  348            196  337  376  414  442  456
 26  105    417  424  427  415  401  324  195   33  183  307  345  377  399  417
 27  100    380  387  389  382  370  303  187   35  172  284  315  344  365  380
 28   90    318  327  327  323  313  266  171   39  153  240  267  288  307  318
 29   80    274  279  281  280  272  233  159   41  135  209  231  248  262  274
 30   70    238  243  245  245  241  210  149   42  124  186  203  216  229  238
 31   60    210  218  218  219  214  191  140   44  114  165  181  193  204  210
 32   40    175  180  182  182  180  165  127   44  101  139  151  160  169  175
 33   20    156  160  162  163  162  150  119   45   93  126  136  144  151  156
 34    0    149  153  155  156  156  145  116   45   91  122  130  138  144  149
 35  SURF
 36  142
 37  140
 38  138
 39  136
 40  133
 41  130
 42  125
```

CREST OFFSHORE, INC.

Sheet 6.17 of 4 PILE

By JWS Client O.S. HAYT Subject STRUCTURAL CONCEPT ANALYSIS

Date 4-15-76 Job No. 27-771-00 Calculation L=50'


```
LINE NO. 1...5....0....5....0....5....0....5....0....5....0....5....0....5....0....5....0
         1    1    2    2    3    3    4    4    5    5    6    6    7    7    8

 43  120
 44  115
 45  110
 46  105
 47  100
 48   90
 49   80
 50   70
 51   60
 52   40
 53   20
 54    0
 55  WIND  1   80 270  177  1005 173 15   ALL
 56        2  300 270  168  1005 173 15   ALL
 57        3   80 180  177  1005 173 15   ALL
 58        4  300 180  168  1005 173 15   ALL
 59  END
 60  SECT
 61  SECT W21X55    WF  16.2      1.24   1140        48.3   8.215  .522 20.8  .375 .563
 62  SECT W18X55    WF  16.2      1.66    891        45     7.532  .630 18.12 .390 .438
 63  SECT W18X40    WF  11.8      0.81    612        19.1   6.018  .524 17.9  .316 .438
 64  SECT HBRACE1   TUB 21.21    968      484       484     14     .500
 65  SECT XBRACE1   TUB 24.35   1464      732       732     16     .500
 66  SECT HBRACE2   TUB 27.49   2106     1053      1053     18     .500
 67  SECT DBRACE1   TUB 36.04   3574     1787      1787     20     .625
 68  SECT SS COLS   TUB102.05  21310    10655     10655     30    1.250
 69  SECT PILING1   TUB136.46  41260    20630     20630     36    1.250
 70  SECT JKT LEG   TUB 62.05  24212    12106     12106     40     .500
 71  SECT MISHRON   PRI 50.0   30000    30000     30000     10               5
 72  SECT PILING2   TUB162.58  48480    24240     24240     36    1.500
 73  SECT DBRACE2   TUB 27.49   2106     1053      1053     18     .500
 74  SECT XBRACE2   TUB 27.49   2106     1053      1053     18     .500
 75  SECT XBRACE3   TUB 30.63   2914     1457      1457     20     .500
 76  SECT DBRACE3   TUB 16.05    746      373       373     14     .375
 77  SECT HBRACE3   TUB 16.05    746      373       373     14     .375
 78  GRUP
 79  GRUP W21 W21X55               29    11.6 36   1                 2.5
 80  GRUP W18 W18X55                               1 3.0             2.5
 81  GRUP W17 W18X40                               1                 2.5
 82  GRUP HB1 HBRACE1   14   .500                  2 3.0
 83  GRUP HB2 HBRACE2   18   .500                  2 3.0
 84  GRUP DB1 DBRACE1   20   .625                  2 3.0 0.8 0.8
 85  GRUP DB2 DBRACE2   18   .500                  2 3.0 0.8 0.8
 86  GRUP XB1 XBRACE1   16   .500                  2 2.0 0.7 0.7
 87  GRUP XB2 XBRACE2   18   .500                  2 2.3 0.7 0.7
 88  GRUP XB3 XBRACE3   20   .500                  2 2.5 0.7 0.7
 89  GRUP SSC SS COLS   30  1.250                  1
 90  GRUP JL1 JKT LEG   40   .500                  1
 91  GRUP P1  PILING1   36  1.250                  1
 92  GRUP P2  PILING2   36  1.500                  1
```

```
LINE NO, 1....5....0....5....0....5....0....5....0....5....0....5....0....5....0....5....0....5....0
    93  GROP HBN WISHRON                                    2
    94  GROP DB3 DBRACE3   14    .375                       2 2.5 0.8 0.8
    95  GROP HB3 HBRACE3   14    .375                       2 2.5
    96  MEMBER
    97  MEMBER    5   4 W21
    98  MEMBER    6   3 W17
    99  MEMBER    7   2 W17
   100  MEMBER    8   1 W21
   101  MEMBER    5   6 W21
   102  MEMBER    6   7 W21
   103  MEMBER    7   8 W21
   104  MEMBER    4   5 W21
   105  MEMBER    3   2 W21
   106  MEMBER    2   1 W21
   107  MEMBER   12   5 SSC                                                    30
   108  MEMBER   11   4 SSC                                                    30
   109  MEMBER   14   8 SSC                                                    30
   110  MEMBER    9   1 SSC                                                    30
   111  MEMBER   12  11 W18
   112  MEMBER   13  10 W18
   113  MEMBER   14   9 W18
   114  MEMBER   12  13 W18
   115  MEMBER   13  14 W18
   116  MEMBER   11  10 W18
   117  MEMBER   10   9 W18
   118  MEMBER   17  12 SSC                                                    30
   119  MEMBER   16  11 SSC                                                    30
   120  MEMBER   18  14 SSC                                                    30
   121  MEMBER   15   9 SSC                                                    30
   122  MEMBER   17  11 DB3                                                    14
   123  MEMBER   18   9 DB3                                                    14
   124  MEMBER   17  14 DB3                                                    14
   125  MEMBER   16   9 DB3                                                    14
   126  MEMBER   12  16 HB3                                                    14
   127  MEMBER   18  15 HB3                                                    14
   128  MEMBER   17  18 HB3                                                    14
   129  MEMBER   16  15 HB3                                                    14
   130  MEMBER   21  17 SSC                                                    30
   131  MEMBER   20  16 SSC                                                    30
   132  MEMBER   22  18 SSC                                                    30
   133  MEMBER   19  15 SSC                                                    30
   134  MEMBER   25  21 JL1                                              F     40
   135  MEMBER   24  20 JL1                                              F     40
   136  MEMBER   26  22 JL1                                              F     40
   137  MEMBER   23  19 JL1                                              F     40
   138  MEMBER   25  24 HB1                                                    14
   139  MEMBER   26  23 HB1                                                    14
   140  MEMBER   25  26 HB1                                                    14
   141  MEMBER   24  23 HB1                                                    14
   142  MEMBER   25  27 XB1                                                    16
```

CREST OFFSHORE, INC.

By [illegible] Client [illegible] Subject STRUCTURAL CONCEPT ANALYSIS Sheet [illegible] of 4 PILE

Date 4-15-76 Job No. [illegible] Calculation [illegible]

CREST OFFSHORE, INC.

Sheet 619 of 4P8

By JWS Client U.S. NAVY Subject STRUCTURAL CONCEPT ANALYSIS
Date 4-15-76 Job No. 27-711-00 Calculation L=50'

SEALOAD=2 PAGE

```
SE NO. 1...5....0....5....0....5....0....5....0....5....0....5....0....5....0....5....0
```

SE NO.						
143	MEMBER	27	23	XB1		16
144	MEMBER	26	27	XB1		16
145	MEMBER	27	24	XB1		16
146	MEMBER	30	25	JL1	F	40
147	MEMBER	29	24	JL1	F	40
148	MEMBER	31	26	JL1	F	40
149	MEMBER	28	23	JL1	F	40
150	MEMBER	29	25	DB1		20
151	MEMBER	28	26	DB1		20
152	MEMBER	31	25	DB1		20
153	MEMBER	29	24	DB1		20
154	MEMBER	30	29	HB1		14
155	MEMBER	31	28	HB1		14
156	MEMBER	30	31	HB1		14
157	MEMBER	29	28	HB1		14
158	MEMBER	30	32	XB2		18
159	MEMBER	32	28	XB2		18
160	MEMBER	31	32	XB2		18
161	MEMBER	32	29	XB2		18
162	MEMBER	35	30	JL1	F	40
163	MEMBER	34	29	JL1	F	40
164	MEMBER	36	31	JL1	F	40
165	MEMBER	33	28	JL1	F	40
166	MEMBER	33	29	DB2		18
167	MEMBER	36	28	DB2		18
168	MEMBER	35	31	DB2		18
169	MEMBER	34	28	DB2		18
170	MEMBER	35	34	HB2		18
171	MEMBER	36	33	HB2		18
172	MEMBER	35	36	HB2		18
173	MEMBER	34	33	HB2		18
174	MEMBER	34	37	XB3		20
175	MEMBER	37	33	XB3		20
176	MEMBER	36	37	XB3		20
177	MEMBER	37	34	XB3		20
178	MEMBER	42	35	JL1	F	40
179	MEMBER	40	34	JL1	F	40
180	MEMBER	44	36	JL1	F	40
181	MEMBER	38	33	JL1	F	40
182	MEMBER	35	41	DB2		18
183	MEMBER	41	34	DB2		18
184	MEMBER	36	45	DB2		18
185	MEMBER	45	33	DB2		18
186	MEMBER	35	43	DB2		18
187	MEMBER	43	36	DB2		18
188	MEMBER	34	39	DB2		18
189	MEMBER	39	33	DB2		18
190	MEMBER	42	41	HB2		18
191	MEMBER	41	40	HB2		18
192	MEMBER	44	45	HB2		18

CREST OFFSHORE, INC.

Sheet 62 of 4 PILE

By JWS Client U.S. NAVY Subject STRUCTURAL CONCEPT ANALYSIS

Date 4-15-76 Job No. 27-771-72 Calculation L=30'

SEALOAD=2 5

LINE NO.								
193	MEMBER	45	38	HB2			18	
194	MEMBER	42	43	HB2			18	
195	MEMBER	43	44	HB2			18	
196	MEMBER	40	39	HB2			18	
197	MEMBER	39	38	HB2			18	
198	MEMBER	42	46	XB3			20	
199	MEMBER	46	38	XB3			20	
200	MEMBER	44	46	XB3			20	
201	MEMBER	46	40	XB3			20	
202	MEMBER	25	55	WBN				
203	MEMBER	55	56	WBN	1111			
204	MEMBER	24	53	WBN				
205	MEMBER	53	54	WBN	1111			
206	MEMBER	26	57	WBN				
207	MEMBER	57	58	WBN	1111			
208	MEMBER	23	51	WBN				
209	MEMBER	51	52	WBN	1111			
210	MEMBER	30	63	WBN				
211	MEMBER	63	64	WBN	1111			
212	MEMBER	29	61	WBN				
213	MEMBER	61	62	WBN	1111			
214	MEMBER	31	65	WBN				
215	MEMBER	65	66	WBN	1111			
216	MEMBER	28	59	WBN				
217	MEMBER	59	60	WBN	1111			
218	MEMBER	35	71	WBN				
219	MEMBER	71	72	WBN	1111			
220	MEMBER	34	69	WBN				
221	MEMBER	69	70	WBN	1111			
222	MEMBER	36	73	WBN				
223	MEMBER	73	74	WBN	1111			
224	MEMBER	33	67	WBN				
225	MEMBER	67	68	WBN	1111			
226	MEMBER	42	79	WBN				
227	MEMBER	79	80	WBN	1111			
228	MEMBER	40	77	WBN				
229	MEMBER	77	78	WBN	1111			
230	MEMBER	40	81	WBN				
231	MEMBER	81	82	WBN	1111			
232	MEMBER	38	75	WBN				
233	MEMBER	75	76	WBN	1111			
234	MEMBER	21	56	P1		F	36	2
235	MEMBER	56	64	P1		F	36	2
236	MEMBER	64	72	P1		F	36	2
237	MEMBER	72	80	P2		F	36	2
238	MEMBER	20	54	P1		F	36	4
239	MEMBER	54	62	P1		F	36	4
240	MEMBER	62	70	P1		F	36	4
241	MEMBER	70	78	P2		F	36	4
242	MEMBER	22	58	P1		F	36	1

```
                1    1    2    2    3    3    4    4    5    5    6    6    7    7    8
LINE NO. 1...5....0....5....0....5....0....5....0....5....0....5....0....5....0....5....0
  243  MEMBER   58  66 P1                                                  F  36   1
  244  MEMBER   66  74 P1                                                  F  36   1
  245  MEMBER   74  82 P2                                                  F  36   1
  246  MEMBER   19  52 P1                                                  F  36   3
  247  MEMBER   52  60 P1                                                  F  36   3
  248  MEMBER   60  68 P1                                                  F  36   3
  249  MEMBER   68  76 P2                                                  F  36   3
  250  MEMBER   80 102 P2                                                  F  36   2
  251  MEMBER   78 104 P2                                                  F  36   4
  252  MEMBER   82 101 P2                                                  F  36   1
  253  MEMBER   76 103 P2                                                  F  36   3
  254  JOINT
  255  JOINT    1    15     15    159                          UPERDECK
  256  JOINT    2    15      5    159                          UPERDECK
  257  JOINT    3    15     -5    159                          UPERDECK
  258  JOINT    4    15    -15    159                          UPERDECK
  259  JOINT    5   -15    -15    159                          UPERDECK
  260  JOINT    6   -15     -5    159                          UPERDECK
  261  JOINT    7   -15      5    159                          UPERDECK
  262  JOINT    8   -15     15    159                          UPERDECK
  263  JOINT    9    15     15    144                          LOERDECK
  264  JOINT   10    15      0    144                          LOERDECK
  265  JOINT   11    15    -15    144                          LOERDECK
  266  JOINT   12   -15    -15    144                          LOERDECK
  267  JOINT   13   -15      0    144                          LOERDECK
  268  JOINT   14   -15     15    144                          LOERDECK
  269  JOINT   15    15     15    130                          SUPERSTR
  270  JOINT   16    15    -15    130                          SUPERSTR
  271  JOINT   17   -15    -15    130                          SUPERSTR
  272  JOINT   18   -15     15    130                          SUPERSTR
  273  JOINT   19    15     15   1005                          SUPERSTR
  274  JOINT   20    15    -15   1005                          SUPERSTR
  275  JOINT   21   -15    -15   1005                          SUPERSTR
  276  JOINT   22   -15     15   1005                          SUPERSTR
  277  JOINT   23    15.45  15.45   96                         ELEV.+12
  278  JOINT   24    15.45 -15.45   96                         ELEV.+12
  279  JOINT   25   -15.45 -15.45   96                         ELEV.+12
  280  JOINT   26   -15.45  15.45   96                         ELEV.+12
  281  JOINT   27     0      0      96                         ELEV.+12
  282  JOINT   28    18.45  18.45   66                         ELEV.-18
  283  JOINT   29    18.45 -18.45   66                         ELEV.-18
  284  JOINT   30   -18.45 -18.45   66                         ELEV.-18
  285  JOINT   31   -18.45  18.45   66                         ELEV.-18
  286  JOINT   32     0      0      66                         ELEV.-18
  287  JOINT   33    21.55  21.55   35                         ELEV.-49
  288  JOINT   34    21.55 -21.55   35                         ELEV.-49
  289  JOINT   35   -21.55 -21.55   35                         ELEV.-49
  290  JOINT   36   -21.55  21.55   35                         ELEV.-49
  291  JOINT   37     0      0      35                         ELEV.-49
  292  JOINT   38    25.05  25.05    0                         ELEV.-84
```

CREST OFFSHORE, INC.

By [illegible] Client US NAVY Subject [illegible]

Date [illegible] Job No. [illegible] Calculation [illegible]

Sheet 621 of [illegible]

```
LINE NO. 1...5....0....5....0....5....0....5....0....5....0....5....0....5....0....5....0....5....0....5....0
293  JOINT  39   25.05    0      0                                    ELEV.=84
294  JOINT  40   25.05  =25.05   0                                    ELEV.=84
295  JOINT  41    0     =25.05   0                                    ELEV.=84
296  JOINT  42  =25.05  =25.05   0                                    ELEV.=84
297  JOINT  43  =25.05    0      0                                    ELEV.=84
298  JOINT  44  =25.05   25.05   0                                    ELEV.=84
299  JOINT  45    0      25.05   0                                    ELEV.=84
300  JOINT  46    0       0      0                                    ELEV.=84
301  JOINT  51   17.45   17.45  96                                    WISHB+12
302  JOINT  52   15.45   15.45  96.01                                 WISHB+12
303  JOINT  53   17.45  =17.45  96                                    WISHB+12
304  JOINT  54   15.45  =15.45  96.01                                 WISHB+12
305  JOINT  55  =17.45  =17.45  96                                    WISHB+12
306  JOINT  56  =15.45  =15.45  96.01                                 WISHB+12
307  JOINT  57  =17.45   17.45  96                                    WISHB+12
308  JOINT  58  =15.45   15.45  96.01                                 WISHB+12
309  JOINT  59   20.45   20.45  66                                    WISHB=18
310  JOINT  60   18.45   18.45  66.01                                 WISHB=18
311  JOINT  61   20.45  =20.45  66                                    WISHB=18
312  JOINT  62   18.45  =18.45  66.01                                 WISHB=18
313  JOINT  63  =20.45  =20.45  66                                    WISHB=18
314  JOINT  64  =18.45  =18.45  66.01                                 WISHB=18
315  JOINT  65  =20.45   20.45  66                                    WISHB=18
316  JOINT  66  =18.45   18.45  66.01                                 WISHB=18
317  JOINT  67   23.55   23.55  35                                    WISHB=49
318  JOINT  68   21.55   21.55  35.01                                 WISHB=49
319  JOINT  69   23.55  =23.55  35                                    WISHB=49
320  JOINT  70   21.55  =21.55  35.01                                 WISHB=49
321  JOINT  71  =23.55  =23.55  35                                    WISHB=49
322  JOINT  72  =21.55  =21.55  35.01                                 WISHB=49
323  JOINT  73  =23.55   23.55  35                                    WISHB=49
324  JOINT  74  =21.55   21.55  35.01                                 WISHB=49
325  JOINT  75   27.05   27.05   0                                    WISHB=84
326  JOINT  76   25.05   25.05   0.01                                 WISHB=84
327  JOINT  77   27.05  =27.05   0                                    WISHB=84
328  JOINT  78   25.05  =25.05   0.01                                 WISHB=84
329  JOINT  79  =27.05  =27.05   0                                    WISHB=84
330  JOINT  80  =25.05  =25.05   0.01                                 WISHB=84
331  JOINT  81  =27.05   27.05   0                                    WISHB=84
332  JOINT  82  =25.05   25.05   0.01                                 WISHB=84
333  JOINT 103   26.55   26.55  =15                        111         SUPPORT3
334  JOINT 104   26.55  =26.55  =15                        111         SUPPORT4
335  JOINT 102  =26.55  =26.55  =15                        111         SUPPORT2
336  JOINT 101  =26.55   26.55  =15                        111         SUPPORT1
337  END
```

CREST OFFSHORE, INC.

By YVVS Client U.S. HAYT Subject STRUCTURAL CONCEPT ANALYSIS

Date 4-15-76 Job No. 27-11-82 Calculation L=50' Sheet 6.22 of 1 PLS

U.S.NAVY TEMPLET DESIGN - 84 FT PWL JOB NO. 27-771-00

100 YEAR STORM WAVE - PRESSURE PROFILES(PSF) - 4 PILE THETA = 45DEG

PRELIMINARY DESIGN ATKINSON APRIL 1976

STRUCTURE JOB NO. 27-771-00

INPUT UNITS ****ENGLISH

OUTPUT UNITS ****ENGLISH

CREST OFFSHORE, INC.

Sheet 6.24 of 4 ALS

By WWS Client U.S. NAVY Subject STRUCTURAL CONCEPT ANALYSIS

Date 4-15-96 Job No. 21-771-92 Calculation L=50'

**** COEFFICIENT TABLE REPORT ****

DIAMETER IN	NORMAL DRAG COEF	TANG DRAG COEF	MASS COEF
14.000	1.0000	0.0000	1.0000
40.000	1.0000	0.0000	1.0000

11

CREST OFFSHORE, INC.

By KWS Client U.S. NAVY Subject STRUCTURAL CONCRETE ANALYSIS

Date 4-15-76 Job No. 27-701-42 Calculation L=150'

Sheet 6.2.2 of 17 Pages

**** D E A D L O A D R E P O R T ****

LOAD CONDITION 1 MEAN WATER DEPTH = 123,500 FT

STRUCTURE DEAD LOAD = *535.0975 KIPS

- 13.4029 (ballasts)

522.5046

522.5K

CREST OFFSHORE, INC.

By JVA Client USS-NAVY Subject STRUCTURE CONCEPT ANALYSIS

Date 4-13-72 Job No. 27-771-72 Calculation L=50' Sheet 6 of 7 PLE

**** WAVE POSITION SUMMARY REPORT ****

LOAD CONDITION 1 WAVE ANGLE = 45.00

TRIAL NO.	DIST. TO CREST FT	PHASE ANG. WAVE-TO-STRUC. (DEG)	SHEAR KIPS X	SHEAR KIPS Y	SHEAR KIPS RSLNT	MUDLINE MOMENT FT-KIPS X	MUDLINE MOMENT FT-KIPS Y	MUDLINE MOMENT FT-KIPS RSLNT	VERTICAL FORCE KIPS Z
1	-24.0	13.07	845.6	845.6	1195.9	-63649.	63649.	90013.	-5.3
2	-20.0	10.89	863.2	863.2	1220.7	-65948.	65948.	93264.	-6.7
3	-16.0	8.71	871.1	871.1	1231.9	-67112.	67112.	94911.	-7.9
4	-12.0	6.54	883.8	883.8	1249.9	-68964.	68964.	97529.	-8.7
5	-8.0	4.36	885.2	885.2	1251.9	-69404.	69404.	98151.	-8.9
6	-4.0	2.18	882.5	882.5	1248.0	-69594.	69594.	98421.	-9.6
7	0.0	-0.00	874.0	874.6	1236.3	-69181.	69181.	97837.	-9.7
8	4.0	-2.18	858.1	858.1	1213.5	-67789.	67789.	95869.	-7.5
9	8.0	-4.36	838.7	838.7	1186.2	-66091.	66091.	93467.	-5.9
10	12.0	-6.54	814.8	814.8	1152.4	-63943.	63943.	90429.	-2.9
11	16.0	-8.71	780.7	780.7	1104.0	-60536.	60535.	85610.	1.3

CREST OFFSHORE, INC.

By [illegible] Client [illegible] Subject [illegible]

Date [illegible] Job No. [illegible] Calculation [illegible]

Sheet 6.27 of [illegible]

```
****LOAD SUMMARY REPORT****

WAVE NUMBER =  1                    WAVE DIRECTION = 45.000

                X SHEAR FORCE =          832.4620 KIPS
                Y SHEAR FORCE =          882.4620 KIPS
        RESULTANT SHEAR FORCE =         1247.9897 KIPS

              X MUDLINE MOMENT =        *69594.1543 FT*KIPS
              Y MUDLINE MOMENT =         69594.1543 FT*KIPS
      RESULTANT MUDLINE MOMENT =         98470.9969 FT*KIPS

            Z VERTICAL FORCE =           *7.5592 KIPS
```

SECTION 7

60 FT JACKET BASE SPACING

7.1 INTRODUCTION

The moments and horizontal forces from Section 6 (50 FT JACKET BASE) indicated that the piling would be too long for the pile driving hammer we originally chose. A SEALOAD run was made by quickly changing the joint coordinates to model a structure with a jacket base spring of 60 ft. With the results of that run it was determined the 60 ft jacket base would not appreciably reduce the piling lengths and the decision was made to keep the 50 ft jacket base structure and increase the pile driving hammer size. See report of the three-pile structure (Appendix C of 27-771-92 Report) for calculations and discussion of the pile driving hammer.

Section 7.2 shows the plan view only of the computer model as the elevations will remain the same as the Section 6, 50 ft Jacket Base model.

Section 7.3 shows wave direction and wind loading.

Section 7.4 shows the results of the SEALOAD run for this structure.

By WVS Client Gulf INT Subject STRUCTURAL CONCEPT ANALYSIS

Date 4-20-76 Job No. 21-1-92 Calculation 60' JACKET BASE

7.2

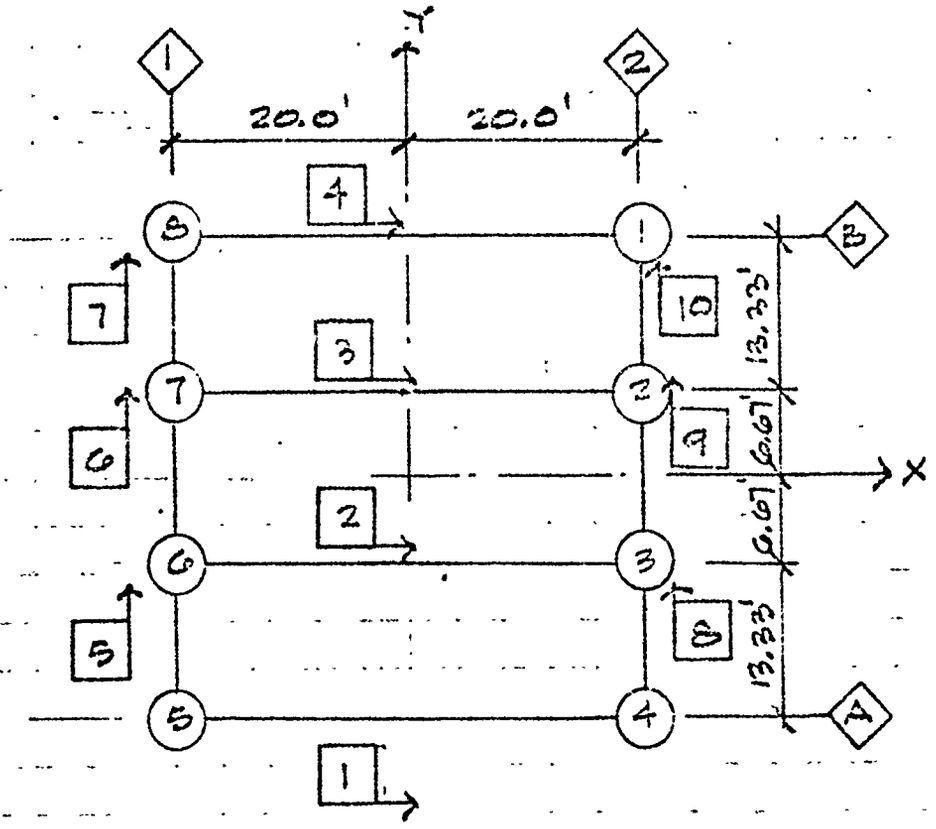

ELEV. (+) 75'.0 (+159)

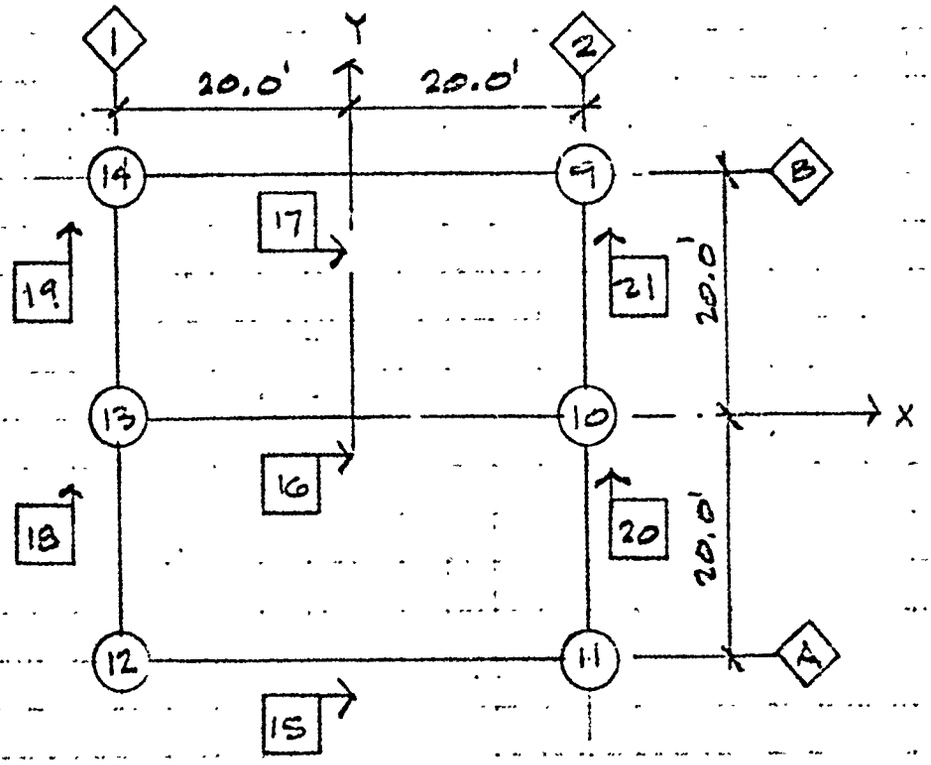

ELEV. (+) 60 (144)

CREST OFFSHORE, INC.

Sheet 7.03 of 4 PLE

By JMA Client U.S. NAVY Subject STRUCTURAL CONCEPT ANALYSIS

Date [illegible] Job No. 27-171-92 Calculation 600' JACKET BASE

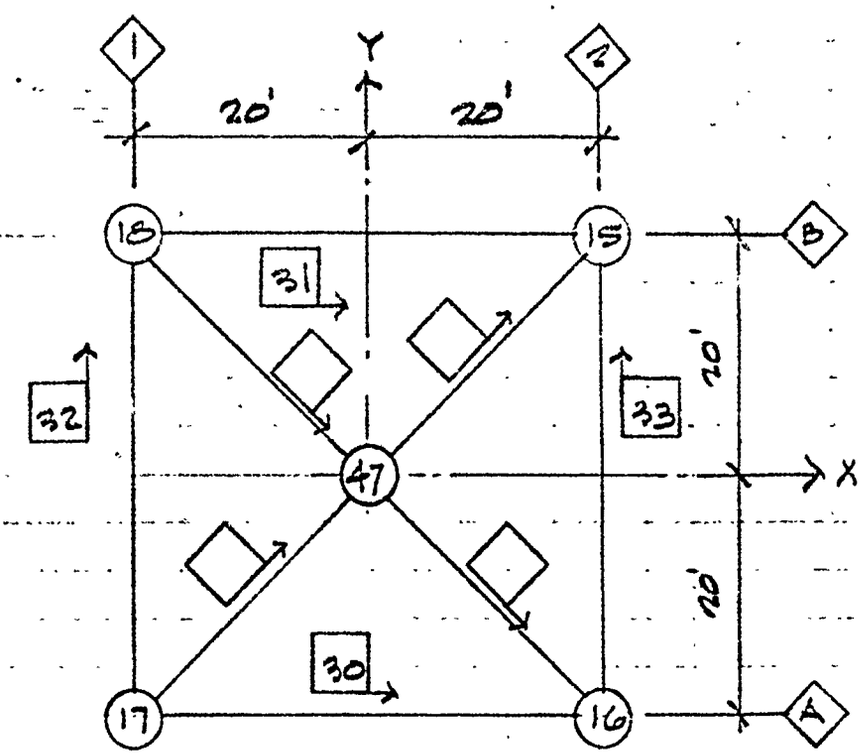

ELEV. (+) 46' (130)

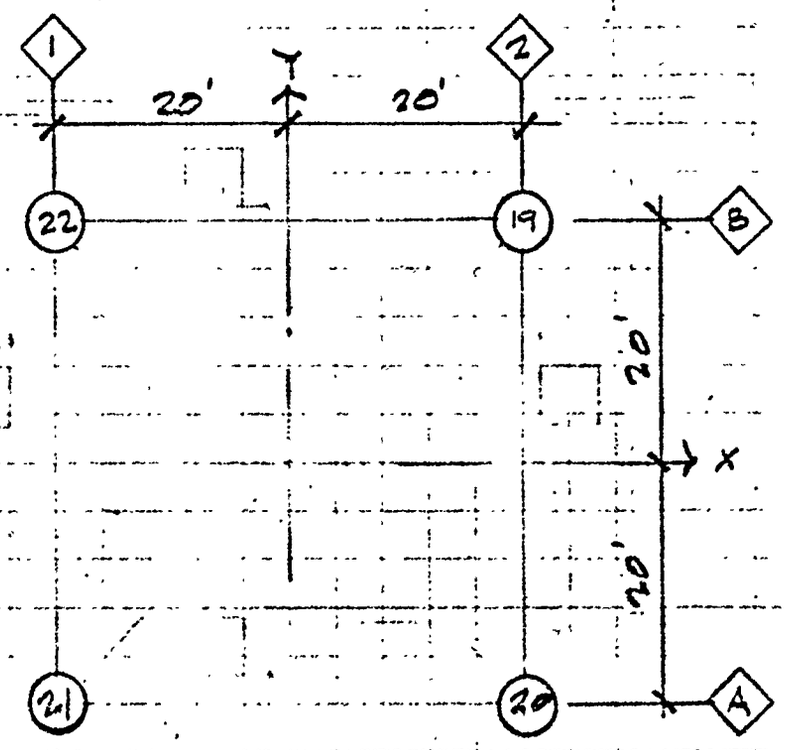

ELEV. (+) 6.5 (100.5)

CREST OFFSHORE, INC.

Sheet 1.04 of 4 PLE

By WVS Client U.S. NAVY Subject STRUCTURAL CONCEPT ANALYSIS

Date 12 10 86 Job No. 21-771-92 Calculation STRUCTURE 4/LEG

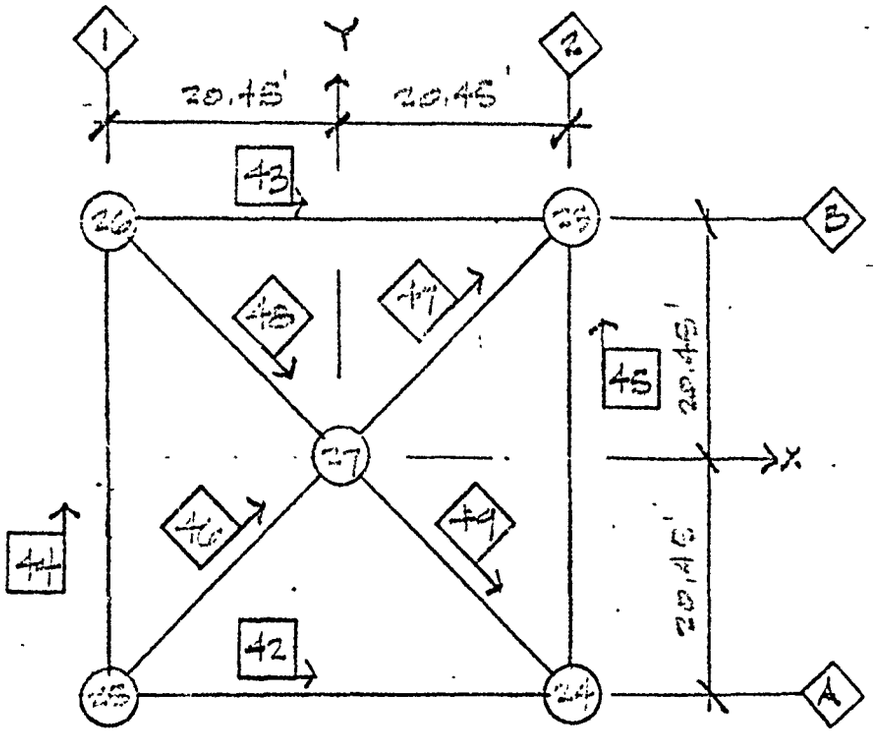

ELEV. (+) 12 (96)

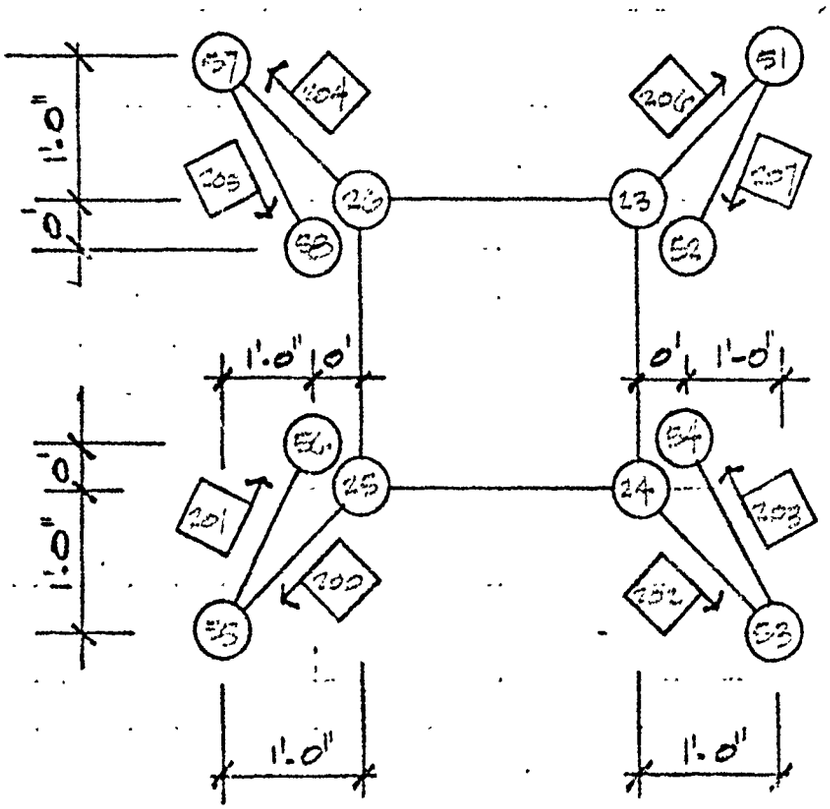

CREST OFFSHORE, INC.

Sheet 7.02 of 4 PIES

By WMS Client U.S. NAVY Subject STRUCTURAL CONCEPT ANALYSIS

Date 4-23-70 Job No. 21-77-92 Calculation STRUCTURE Y/L = 60'

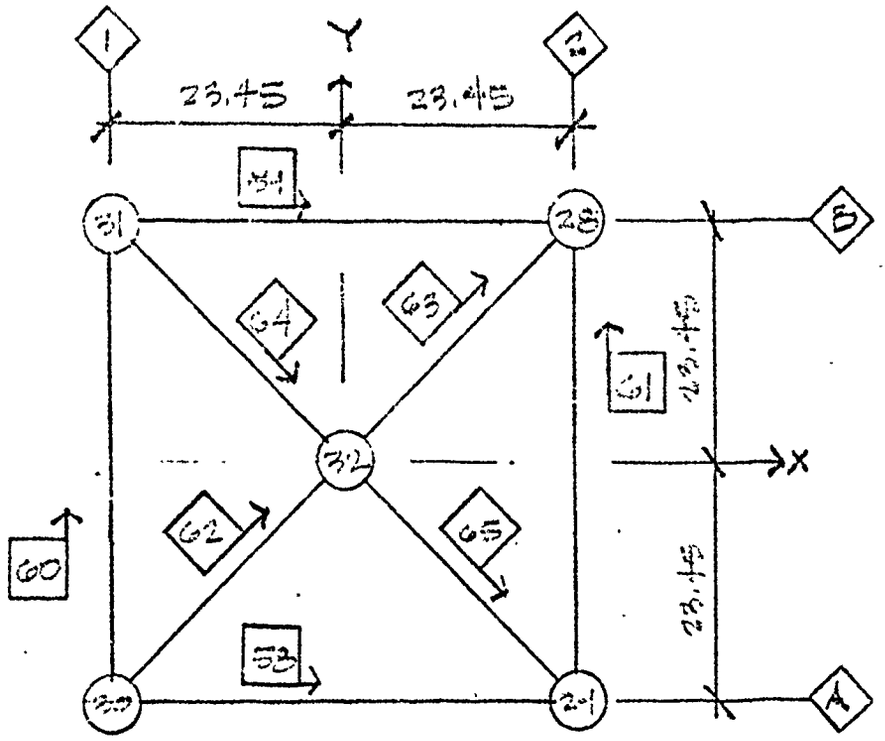

ELEV. (-) 18 (60)

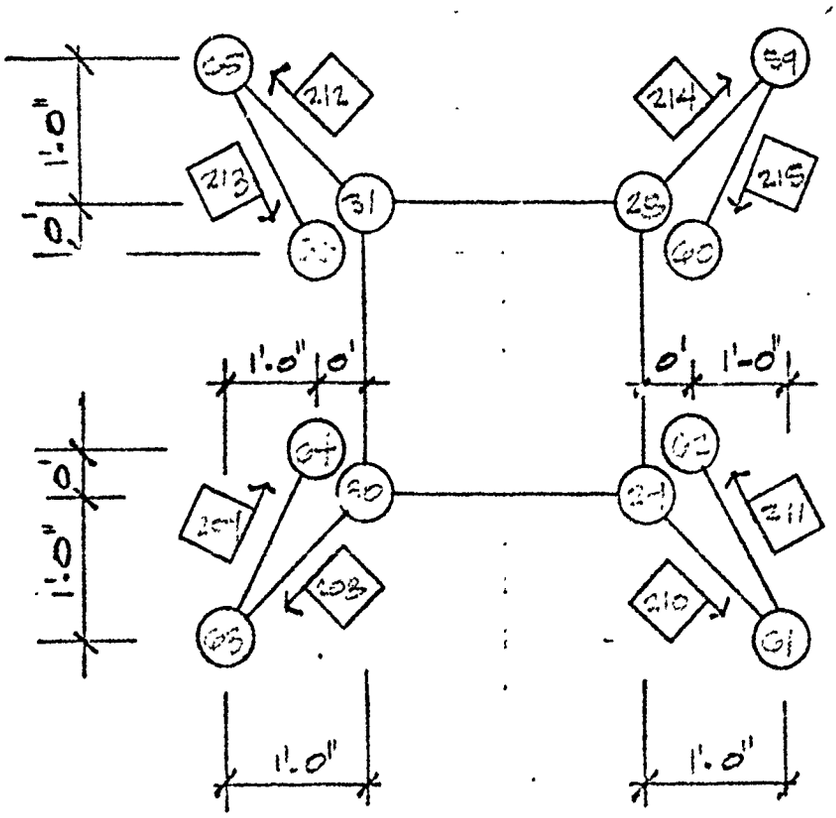

CREST OFFSHORE, INC.

Sheet 1 of 4 Pl

By WS Client U.S. NAVY Subject STRUCTURAL CONCEPT ANALYSIS

Date 4-20-92 Job No. 21-771-92 Calculation STRUCTURE 4/L=60'

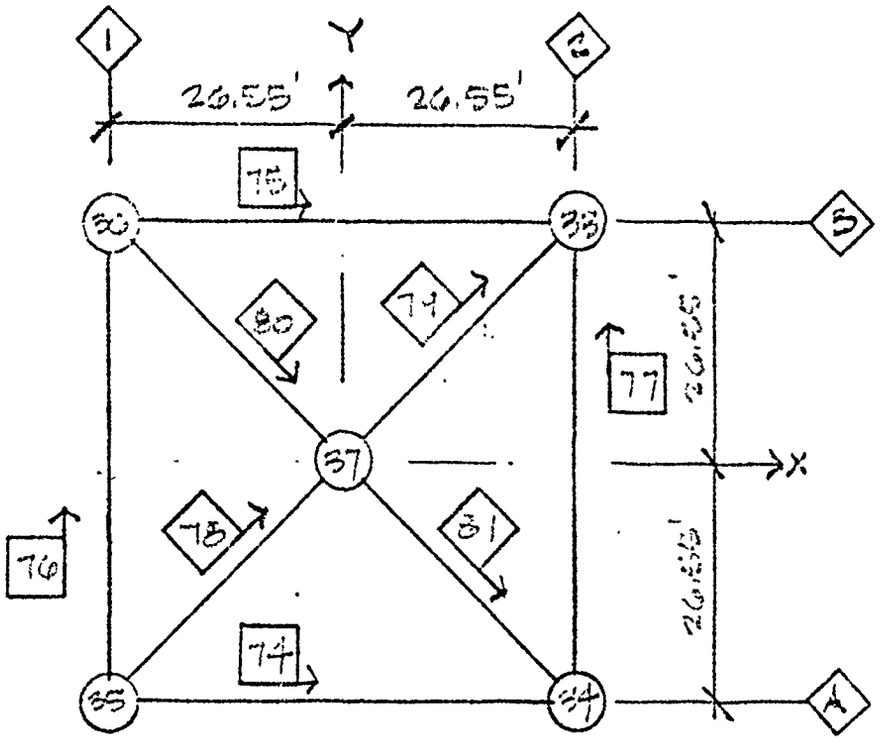

ELEV. (-) 49 (35)

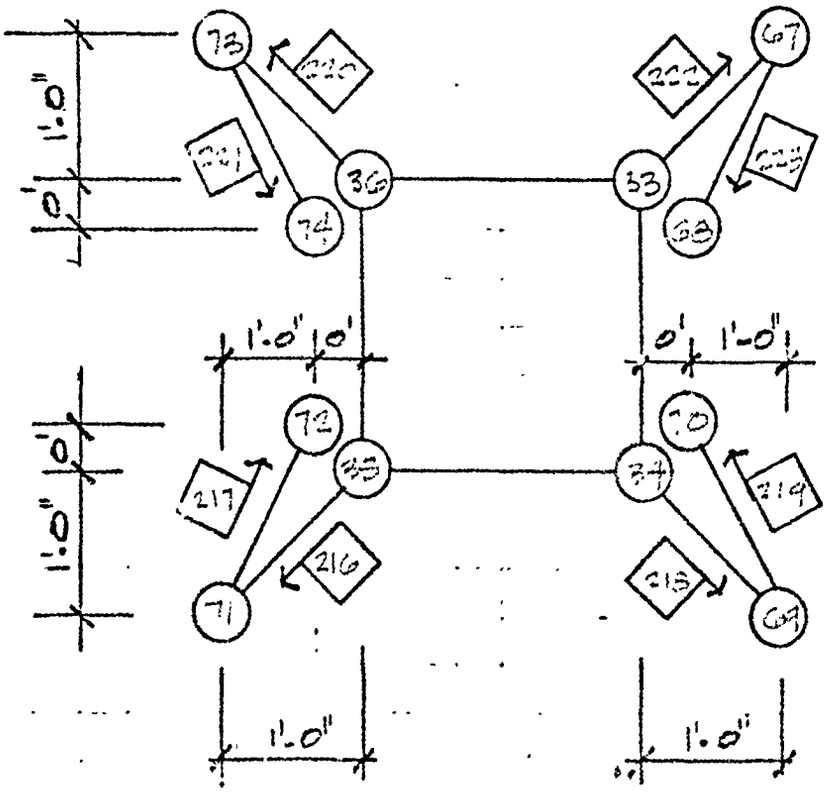

CREST OFFSHORE, INC.

Sheet 7-27 of 4 Pl-2

By WS Client U.S. NAVY Subject STRUCTURAL CONCEPT ANALYSIS

Date [illegible] Job No. 21-771-92 Calculation STRUCTURE Y/L = 60'

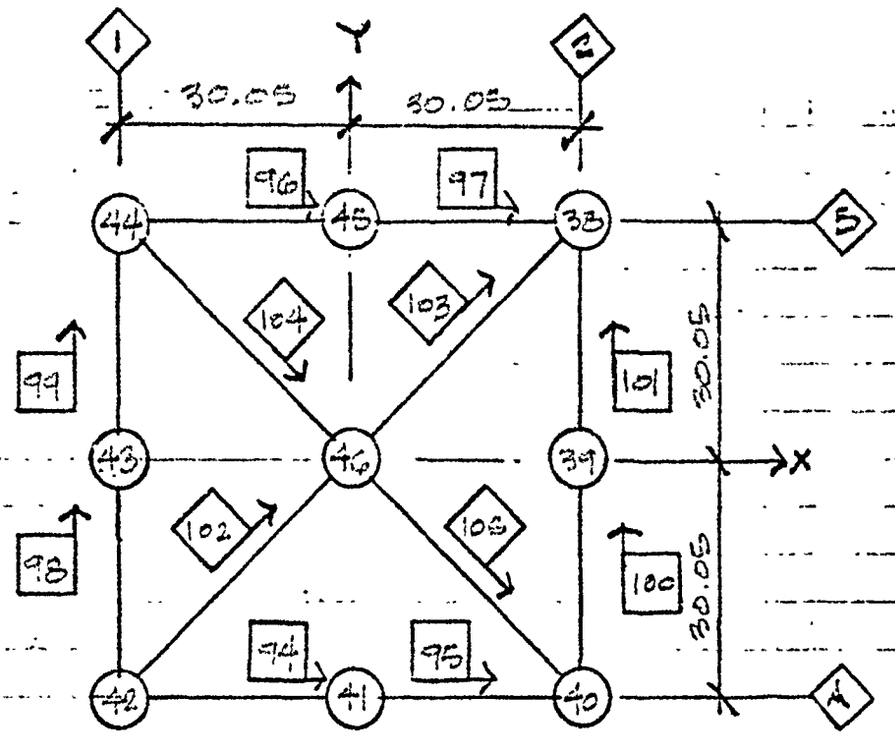

ELEV. (-) 84 (0)

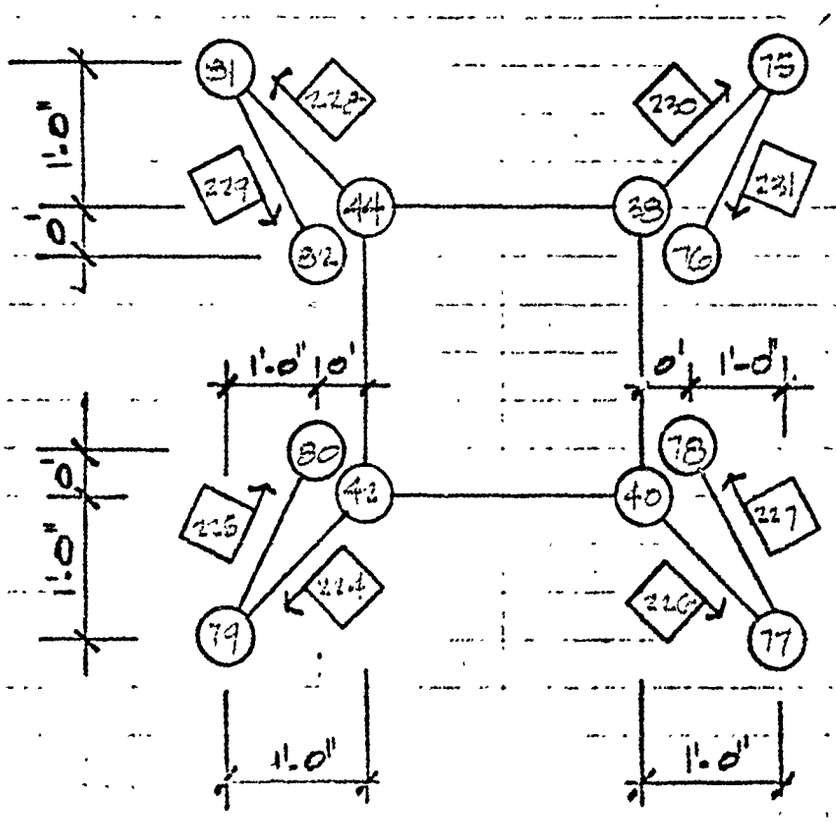

CREST OFFSHORE, INC.

Sheet 1 of 4 Pages

By JWS Client U.S. NAVY Subject STRUCTURAL CONCEPT ANALYSIS

Date 1-20-76 Job No. 27-771-92 Calculation STRUCTURE/LOAD

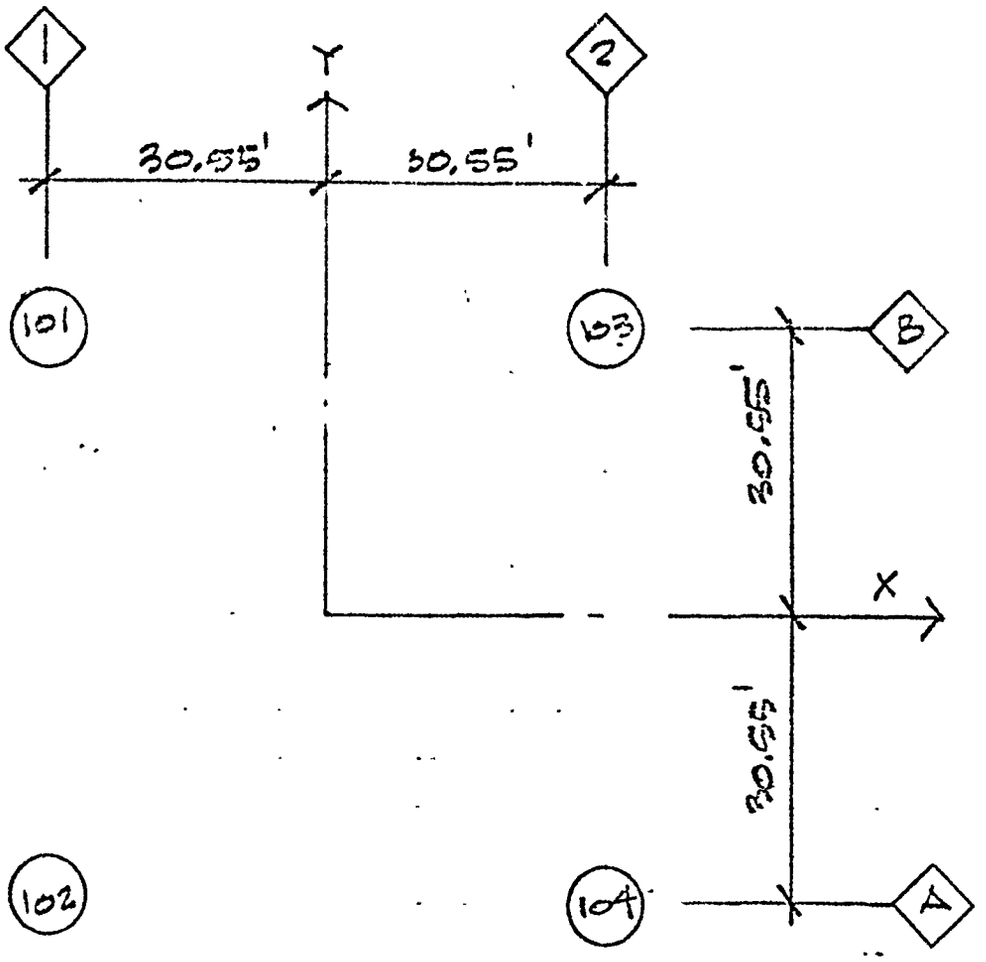

ELEV. (-) 89 (-5)

7.3 WIND & WAVE DIRECTIONS

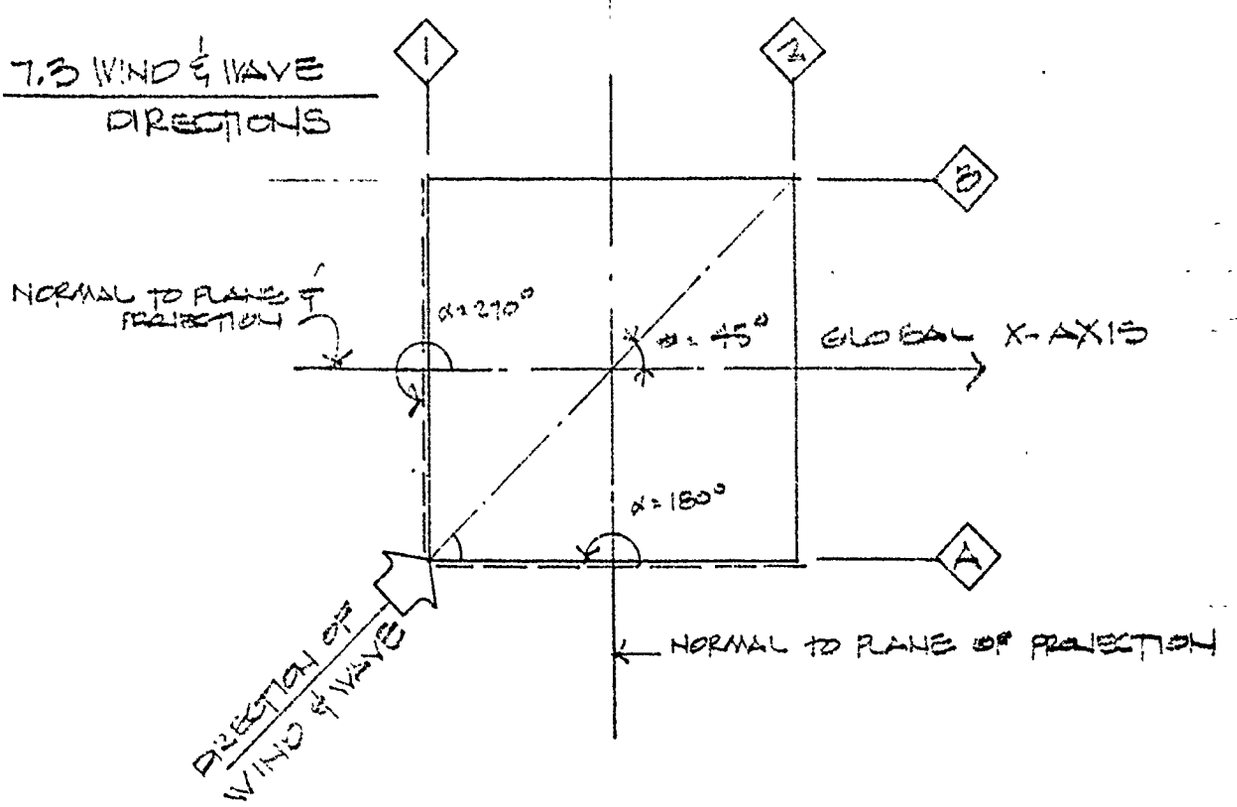

WIND AREAS

FENCE = 50' x 2' = 100 S.F.

AREA BETWEEN DECKS = 50' x 15' x 0.5 = 375 S.F.

U.S.NAVY TEMPLET DESIGN - 84 FT MWL JOB NO. 27-771-00

100 YEAR STORM WAVE - PRESSURE PROFILES(PSF) 4 PILE THETA = 45DEG

PRELIMINARY DESIGN ATKINSON APRIL 1976

STRUCTURE JOB NO. 27-771-00

INPUT UNITS
....ENGLISH

OUTPUT UNITS
....ENGLISH

CREST OFFSHORE, INC.

Sheet 7.1 of 4 PILE

By WVS Client OSHAYT Subject STRUCTURAL CONCEPT ANALYSIS

Date [illegible] Job No. 27-11-92 Calculation L-60

**** COEFFICIENT TABLE REPORT ****

DIAMETER IN	NORMAL DRAG COEF	TANG DRAG COEF	MASS COEF
14.000	1.0000	0.0000	1.0000
40.000	1.0000	0.0000	1.0000

CREST OFFSHORE, INC.

By KWB Client USTRUST Subject STRUCTURAL CONCEPT ANALYSIS Sheet 1 of 4-PILE

Date 4-21-76 Job No. 27-711-92 Calculation LEG

**** D E A D L O A D R E P O R T ****

LOAD CONDITION 1 MEAN WATER DEPTH = 123.500 FT

STRUCTURE DEAD LOAD = 573.8488 KIPS
+ 13.4029
560.4459

less wishbone loads = 342 x 2.83' x .148#/'

CREST OFFSHORE, INC.

By [illegible] Client U.S. NAVY Subject STRUCTURAL CONCEPT ANALYSIS

Date [illegible] Job No. [illegible] Calculation [illegible] Sheet [illegible] of [illegible]

**** WAVE POSITION SUMMARY REPORT ****

LOAD CONDITION 1 WAVE ANGLE = 45.00

TRIAL NO.	DIST. TO CREST FT	PHASE ANG. WAVE-TO-STRUC. (DEG)	SHEAR KIPS X	SHEAR KIPS Y	SHEAR KIPS RSLNT	MUDLINE MOMENT FT-KIPS X	MUDLINE MOMENT FT-KIPS Y	MUDLINE MOMENT FT-KIPS RSLNT	VERTICAL FORCE KIPS Z
1	-24.0	13.07	891.0	891.0	1260.1	-68227.	68227.	96488.	-3.8
2	-20.0	10.89	899.7	899.7	1272.4	-69402.	69402.	98149.	-4.6
3	-16.0	8.71	911.5	911.5	1289.1	-71037.	71037.	100462.	-5.3
4	-12.0	6.54	921.4	921.4	1303.1	-72556.	72556.	102609.	-5.6
5	-8.0	4.36	926.7	926.7	1310.5	-73556.	73556.	104025.	-6.1
6	-4.0	2.18	921.4	921.4	1303.0	-73418.	73418.	103829.	-5.7
7	0.0	-0.00	914.0	914.0	1292.6	-73093.	73093.	103369.	-5.2
8	4.0	-2.18	894.8	894.8	1265.4	-71325.	71325.	100869.	-2.2
9	8.0	-4.36	871.9	871.9	1233.0	-69126.	69126.	97759.	2.2
10	12.0	-6.54	844.2	844.2	1193.8	-66536.	66536.	94097.	5.3
11	16.0	-8.71	818.3	818.3	1157.3	-64243.	64243.	90854.	5.3

**** L O A D S U M M A R Y R E P O R T ****

WAVE NUMBER = 1 WAVE DIRECTION = 45.000

X SHEAR FORCE =	926.6732 KIPS
Y SHEAR FORCE =	926.6732 KIPS
RESULTANT SHEAR FORCE =	1310.5139 KIPS
X MUDLINE MOMENT =	-73556.4324 FT-KIPS
Y MUDLINE MOMENT =	73556.4324 FT-KIPS
RESULTANT MUDLINE MOMENT =	104024.5043 FT-KIPS
Z VERTICAL FORCE =	-6.0790 KIPS

SECTION 8

BOATLANDING

8.1 INTRODUCTION

The boat landing was modeled as a separate structure and a SEALOAD run was made using the same wave and wind characteristics as those specified previously. The boat landing was attached to the templet between Rows '1' and '2' at elevations +11 ft and -3 ft from MLW. This section shows the idealized model for the boat landing structure and the results of the SEALOAD program run. For simplicity loading conditions for the three-pile structure (see Report 27-771-92 Appendix C) were also made with this run. Loading #1 is for wind and wave at a 45° angle to the boat landing to be used with the four-pile structure. Loading #2 is for wind and wave normal to the boatlanding and #3 in 180° from #2, both to be used with the three-pile structure.

CREST OFFSHORE, INC.

Sheet 3.02 of 4PLE

By JWS Client U.S. NAVY Subject STRUCTURAL CONCEPT ANALYSIS

Date 4.13.96 Job No. 21-171-92 Calculation BOAT LANDING

BOAT LANDING

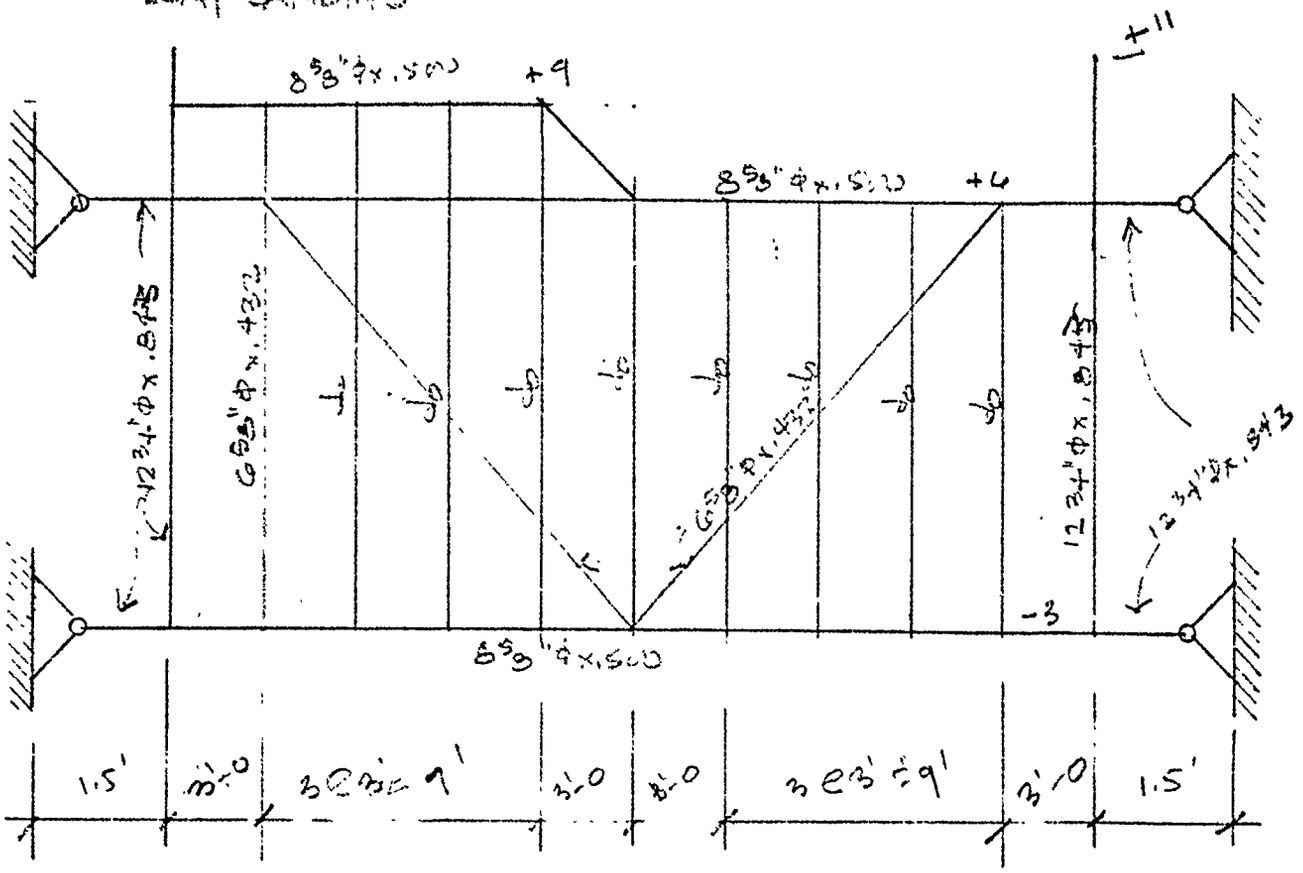

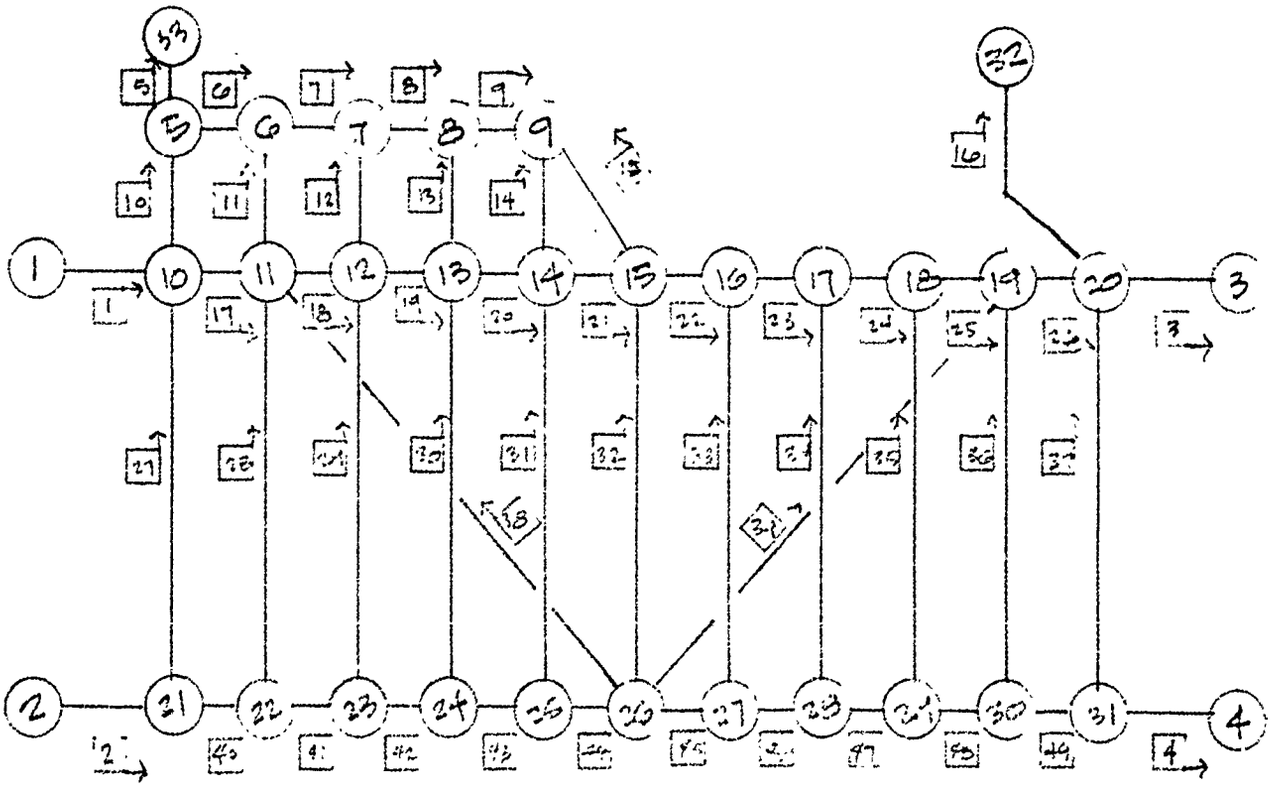

U.S.NAVY TEMPLET DESIGN = 64 FT MWL JOB NO. 27-771-00

100 YEAR STORM WAVE = PRESSURE PROFILES(PSF) 8 PILE THETA = 45DEG

PRELIMINARY DESIGN ATKINSON APRIL 1976

BOAT LANDING

INPUT UNITS
....ENGLISH

OUTPUT UNITS
....ENGLISH

CREST OFFSHORE, INC.

By — Client U.S. NAVY — Subject SPECIFICATION CONCEPT ANALYSIS

Date — Job No. 21-7711-02 — Calculation FOOTLANDING

Sheet 3.04 of 4 PLE

**** WAVE POSITION SUMMARY REPORT ****

LOAD CONDITION 1 — WAVE ANGLE W 45.00

TRIAL NO.	DIST. TO CREST FT	PHASE ANG. WAVE-TO-STRUC. (DEG)	SHEAR KIPS X	SHEAR KIPS Y	SHEAR KIPS RSLNT	MUDLINE MOMENT FT-KIPS X	MUDLINE MOMENT FT-KIPS Y	MUDLINE MOMENT FT-KIPS RSLNT	VERTICAL FORCE KIPS Z
1	-24.0	13.07	19.1	34.4	39.3	-2988.	1657.	3416.	.3
2	-16.0	8.71	18.8	33.9	38.8	-2950.	1637.	3373.	.3
3	-8.0	4.36	18.3	33.0	37.8	-2869.	1594.	3282.	.2
4	0.0	-0.00	17.5	31.6	36.1	-2744.	1525.	3139.	.2
5	8.0	-4.36	16.5	29.7	34.0	-2580.	1435.	2952.	.2
6	16.0	-8.71	15.2	27.4	31.3	-2377.	1323.	2720.	.1

CREST OFFSHORE, INC.

By — Client U.S. NAVY — Subject STRUCTURAL CONCEPT ANALYSIS

Date — Job No. 21-71-72 — Calculation PRESTLANDING

Sheet PAGE 2 of 4 PAGES

**** L O A D S U M M A R Y R E P O R T ****

WAVE NUMBER = 1 WAVE DIRECTION = 45.000

X SHEAR FORCE =	10.0504 KIPS
Y SHEAR FORCE =	34.3700 KIPS
RESULTANT SHEAR FORCE =	39.2965 KIPS
X MUDLINE MOMENT =	-2987.5663 FT-KIPS
Y MUDLINE MOMENT =	1656.9426 FT-KIPS
RESULTANT MUDLINE MOMENT =	3416.2862 FT-KIPS
Z VERTICAL FORCE =	.2779 KIPS

CREST OFFSHORE, INC.

By LWS Client U.S. NAVY Subject [illegible] CONCEPT ANALYSIS

Date 4-15-76 Job No. 21-77-42 Calculation — BEST LANDING

Sheet 2 of 4 PLS

**** WAVE POSITION SUMMARY REPORT ****

LOAD CONDITION 2 WAVE ANGLE = 90.00

TRIAL NO.	DIST. TO CREST FT	PHASE ANG. WAVE TO STRUC. (DEG)	SHEAR KIPS X	SHEAR KIPS Y	SHEAR KIPS RSLNT	MUDLINE MOMENT FT-KIPS X	MUDLINE MOMENT FT-KIPS Y	MUDLINE MOMENT FT-KIPS RSLNT	VERTICAL FORCE KIPS Z
1	-20.0	10.89	0.0	48.4	48.4	-4206.	0.	4206.	0.0
2	-15.0	8.17	0.0	47.6	47.6	-4141.	0.	4141.	0.0
3	-10.0	5.45	0.0	46.5	46.5	-4042.	0.	4042.	0.0
4	-5.0	2.72	0.0	45.2	45.2	-3932.	0.	3932.	0.0
5	0.0	-0.00	0.0	43.7	43.7	-3800.	0.	3800.	0.0
6	5.0	-2.72	0.0	41.9	41.9	-3646.	0.	3646.	0.0
7	10.0	-5.45	0.0	40.0	40.0	-3476.	0.	3476.	0.0

**** LOAD SUMMARY REPORT ****

WAVE NUMBER = 2 WAVE DIRECTION = 90.000

X SHEAR FORCE =	0.0000 KIPS
Y SHEAR FORCE =	48.3774 KIPS
RESULTANT SHEAR FORCE =	48.3774 KIPS
X MUDLINE MOMENT =	-4205.5219 FT-KIPS
Y MUDLINE MOMENT =	0.0000 FT-KIPS
RESULTANT MUDLINE MOMENT =	4205.5219 FT-KIPS
Z VERTICAL FORCE =	0.0000 KIPS

CREST OFFSHORE, INC.

By JWS Client USCG Subject STRUCTURAL CONSIDERATIONS

Date 4-15-76 Job No. 27-771-92 Calculation BOAT LANDING

Sheet 6.08 of 4 PAGE

**** WAVE POSITION SUMMARY REPORT ****

LOAD CONDITION 3

WAVE ANGLE = 270.00

TRIAL NO.	DIST. TO CREST FT	PHASE ANG. WAVE-TO-STRUC. (DEG)	SHEAR KIPS X	SHEAR KIPS Y	SHEAR KIPS RSLNT	MUDLINE MOMENT FT-KIPS X	MUDLINE MOMENT FT-KIPS Y	MUDLINE MOMENT FT-KIPS RSLNT	VERTICAL FORCE KIPS Z
1	-20.0	10.89	0.0	-46.4	46.4	4033.	0.	4033.	0.0
2	-15.0	8.17	0.0	-47.5	47.5	4132.	0.	4132.	0.0
3	-10.0	5.45	0.0	-48.4	48.4	4208.	0.	4208.	0.0
4	-5.0	2.72	0.0	-48.7	48.7	4236.	0.	4236.	0.0
5	0.0	-0.00	0.0	-48.9	48.9	4249.	0.	4249.	0.0
6	5.0	-2.72	0.0	-48.8	48.8	4245.	0.	4245.	0.0
7	10.0	-5.45	0.0	-48.4	48.4	4206.	0.	4206.	0.0

**** L O A D S U M M A R Y R E P O R T ****

WAVE NUMBER = 3 WAVE DIRECTION =270.000

X SHEAR FORCE =	0.0000 KIPS
Y SHEAR FORCE =	-48.8782 KIPS
RESULTANT SHEAR FORCE =	48.8782 KIPS
X MUDLINE MOMENT =	4248.9737 FT-KIPS
Y MUDLINE MOMENT =	0.0000 FT-KIPS
RESULTANT MUDLINE MOMENT =	4248.9737 FT-KIPS
Z VERTICAL FORCE =	0.0000 KIPS

SECTION 9

STAIRWAY

9.1 INTRODUCTION

The stairway was modeled as a separate structure also. The stairway was attached to the superstructure legs between Rows '1' and '2' at elevations +11 ft and +75 ft from MLW.

This section shows the idealized model for the stairway structure and the results of the SEALOAD run. Loading #1 is for the four-pile structures while loadings #2 and#3 are to be used with the three-pile structure.

CREST OFFSHORE, INC.

Sheet 9.02 of 4 FILE

By WAS Client U.S. NAVY Subject STRUCTURAL CONCEPT ANALYSIS

Date 4-19-76 Job No. 27-771-92 Calculation STAIRWAY

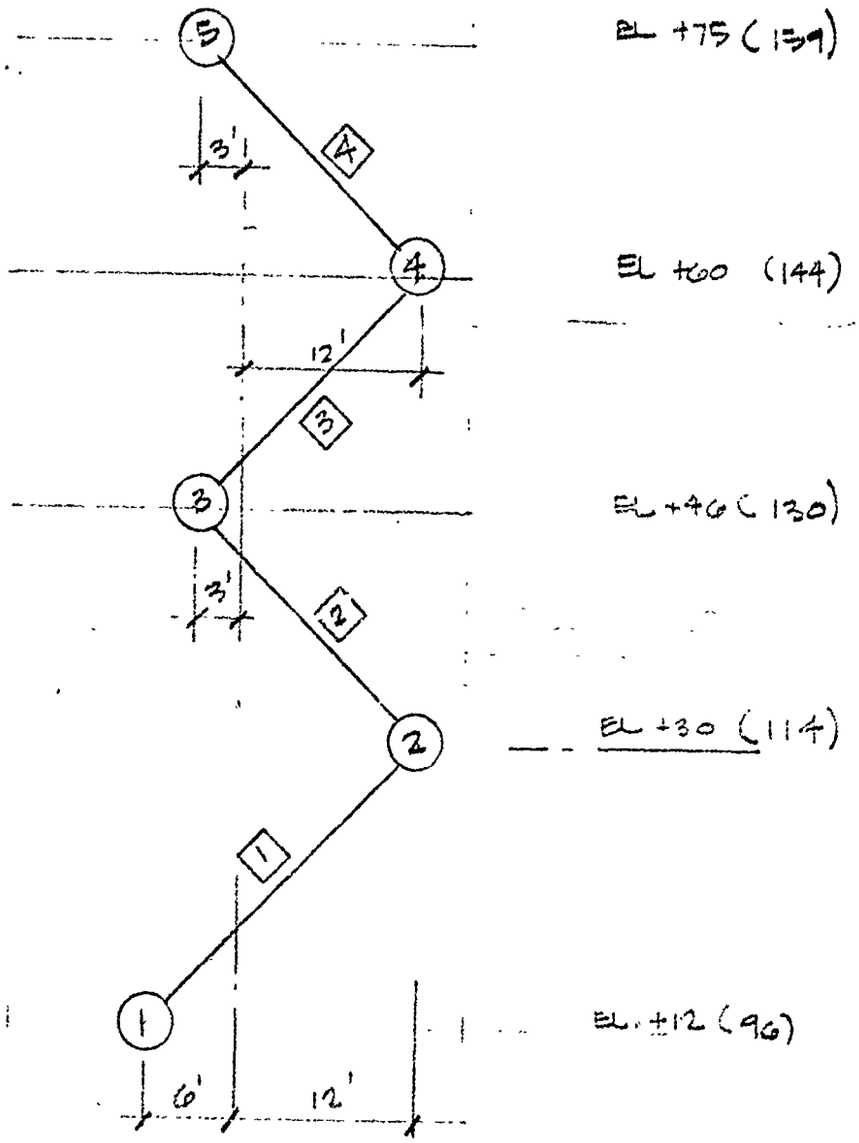

U.S.NAVY TEMPLET DESIGN - 84 FT MWL JOB NO. 27-771-00

100 YEAR STORM WAVE + PRESSURE PROFILES(PSF) 4 PILE THETA = 45DEG

PRELIMINARY DESIGN ATKINSON APRIL 1976

STAIRWAY

INPUT UNITS
....ENGLISH

OUTPUT UNITS
....ENGLISH

CREST OFFSHORE, INC.

By JAS Client U.S. NAVY Subject STRUCTURAL CONCEPT ANALYSIS
Date 4-19-76 Job No. 27-771-02 Calculation STAIRWAY

Sheet 1.03 of 4 PAGE

CREST OFFSHORE, INC.

By [illegible] Client [illegible] Subject [illegible]

Date [illegible] Job No. [illegible] Calculation [illegible]

Sheet [illegible] of 4 [illegible]

****** WAVE POSITION SUMMARY REPORT ******

LOAD CONDITION 1 WAVE ANGLE = 45.00

TRIAL NO.	DIST. TO CREST FT	PHASE ANG. WAVE-TO-STRUC. (DEG)	SHEAR KIPS X	SHEAR KIPS Y	SHEAR KIPS RSLNT	MUDLINE MOMENT FT-KIPS X	MUDLINE MOMENT FT-KIPS Y	MUDLINE MOMENT FT-KIPS RSLNT	VERTICAL FORCE KIPS Z
1	-24.0	13.07	26.2	52.3	58.5	-6427.	3217.	7187.	-4.1
2	-16.0	8.71	27.6	55.2	61.7	-6833.	3406.	7634.	-5.8
3	-8.0	4.36	28.0	56.1	62.7	-6976.	3467.	7790.	-6.3
4	0.0	-0.00	27.0	54.2	60.5	-6744.	3351.	7531.	-6.0
5	8.0	-4.36	23.9	47.8	53.4	-5895.	2946.	6590.	-3.9
6	16.0	-8.71	20.3	40.4	45.2	-4941.	2485.	5530.	-1.7

CREST OFFSHORE, INC.

By LWD Client USL NAVY Subject TRUSS CONCEPT ANALYSIS Sheet 3.5 of 4 PLES

Date 4-19-76 Job No. 27-771-02 Calculation STALKEWAY

**** L O A D S U M M A R Y R E P O R T ****

WAVE NUMBER = 1 WAVE DIRECTION = 45.000

X SHEAR FORCE =	27.9532 KIPS
Y SHEAR FORCE =	56.0893 KIPS
RESULTANT SHEAR FORCE =	62.6689 KIPS
X MUDLINE MOMENT =	-6979.5942 FT-KIPS
Y MUDLINE MOMENT =	3467.1854 FT-KIPS
RESULTANT MUDLINE MOMENT =	7789.7554 FT-KIPS
Z VERTICAL FORCE =	-6.2904 KIPS

CREST OFFSHORE, INC.

By JWC Client US NAVY Subject STRUCTURAL CONCEPT ANALYSIS

Date 4-15-76 Job No. 21-771-82 Calculation STALEVAY

Sheet 1 of 4 PLS

**** WAVE POSITION SUMMARY REPORT ****

LOAD CONDITION 8 WAVE ANGLE = 90.00

TRIAL NO.	DIST. TO CREST FT	PHASE ANG. WAVE TO STRUC. (DEG)	SHEAR KIPS X	SHEAR KIPS Y	SHEAR KIPS RSLNT	MUDLINE MOMENT FT-KIPS X	MUDLINE MOMENT FT-KIPS Y	MUDLINE MOMENT FT-KIPS RSLNT	VERTICAL FORCE KIPS Z
1	-20.0	10.89	0.0	80.7	80.7	-10025.	0.	10025.	0.0
2	-15.0	8.17	0.0	81.2	81.2	-10128.	0.	10128.	0.0
3	-10.0	5.45	0.0	77.9	77.9	-9694.	0.	9694.	0.0
4	-5.0	2.72	0.0	74.0	74.0	-9182.	0.	9182.	0.0
5	0.0	-0.00	0.0	68.1	68.1	-8403.	0.	8403.	0.0
6	5.0	-2.72	0.0	62.4	62.4	-7661.	0.	7661.	0.0
7	10.0	-5.45	0.0	56.8	56.8	-6952.	0.	6952.	0.0

CREST OFFSHORE, INC.

By [illegible] Client [illegible] Subject [illegible] Sheet 9 of 44 Pages

Date [illegible] Job No. [illegible] Calculation [illegible]

**** L O A D S U M M A R Y R E P O R T ****

WAVE NUMBER = 2 WAVE DIRECTION = 90.000

X SHEAR FORCE =	0.0000 KIPS
Y SHEAR FORCE =	81.2343 KIPS
RESULTANT SHEAR FORCE =	81.2343 KIPS
X MUDLINE MOMENT =	-10128.1059 FT-KIPS
Y MUDLINE MOMENT =	0.0000 FT-KIPS
RESULTANT MUDLINE MOMENT =	10128.1059 FT-KIPS
Z VERTICAL FORCE =	0.0000 KIPS

CREST OFFSHORE, INC.

By [illegible] Client U.S. NAVY Subject STRUCTURAL CONCEPT ANALYSIS

Date 4-18-72 Job No. 21-7142 Calculation STAIRWAY

Sheet 9.08 of 4 PILE

**** WAVE POSITION SUMMARY REPORT ****

LOAD CONDITION 3 WAVE ANGLE = 270.00

TRIAL NO.	DIST. TO CREST FT	PHASE ANG. WAVE TO STRUC. (DEG)	SHEAR KIPS X	SHEAR KIPS Y	SHEAR KIPS RSLNT	MUDLINE MOMENT FT-KIPS X	MUDLINE MOMENT FT-KIPS Y	MUDLINE MOMENT FT-KIPS RSLNT	VERTICAL FORCE KIPS Z
1	-20.0	10.89	0.0	-48.2	48.2	5772.	0.	5772.	0.0
2	-15.0	8.17	0.0	-61.9	61.9	7502.	0.	7502.	0.0
3	-10.0	5.45	0.0	-67.0	67.0	8162.	0.	8162.	0.0
4	-5.0	2.72	0.0	-71.1	71.1	8703.	0.	8703.	0.0
5	0.0	-0.00	0.0	-75.1	75.1	9249.	0.	9249.	0.0
6	5.0	-2.72	0.0	-79.2	79.2	9810.	0.	9810.	0.0
7	10.0	-5.45	0.0	-80.7	80.7	10028.	0.	10028.	0.0

CREST OFFSHORE, INC.

By [illegible] Client U.S. NAVY Subject [illegible] Sheet [illegible] of [illegible]

Date [illegible] Job No. 27-77-192 Calculation [illegible]

```
**** L O A D   S U M M A R Y   R E P O R T ****

WAVE NUMBER =   3                          WAVE DIRECTION =270.000

                    X SHEAR FORCE =          0.0000 KIPS
                    Y SHEAR FORCE =         -80.6503 KIPS
                RESULTANT SHEAR FORCE =      80.6503 KIPS

                  X MUDLINE MOMENT =     10027.6899 FT-KIPS
                  Y MUDLINE MOMENT =         0.0000 FT-KIPS
            RESULTANT MUDLINE MOMENT =     10027.6899 FT-KIPS

                  Z VERTICAL FORCE =         0.0000 KIPS
```

SECTION 10

LATERALLY LOADED PILE CAPACITY

10.1 INTRODUCTION

Some additional data input into the STRAN Program is "Equivalent Pile" length, area, and moment of inertia of the piling sections below mudline to simulate the supports in a more realistic manner. This is done with the results of the "LATERALLY LOADED PILE" Program* which also checks the stress in the piles.

Section 10.2 computes the pile top restraint and the shear and axial loadings to the pile top from the SEALOAD results. Both the 50 ft and 60 ft jacket base spacings were checked for required pile penetration and it was decided to use the 50 ft jacket base spacing for the final analysis.

Section 10.3 shows soil data, minimum wall thickness required for pile driving hammer in accordance with API Recommendations, pile driving resistance curve, and final thicknesses and lengths of piles chosen.

All information was coded and a LATERALLY LOADED PILE Program run was made. The whole run is shown in Exhibit A with only the results of that run being shown in Section 10.4.

Section 10.5 computes the "Equivalent Pile Properties" to be used in the STRAN run.

* This program is available at Crest Engineering, Inc., Tulsa.

10.2 DATA PREPARATION

1. PILE TOP RESTRAINT

$$k = \frac{3.5EI}{L} \quad \left(= \frac{M}{\theta}\right)$$

WHERE $E = 29{,}000$ ksi

$I = 24{,}240.424 \text{ in}^4$
(for a 36"ϕ x 1.5" WT PILE)

$L = 35' = 420$ in

$$\therefore k = \frac{3.5(29{,}000)(24{,}240.424)}{420} \quad \left(\frac{\frac{k}{in^2} \times in^4}{in} = in\text{-}kip\right)$$

$= 5{,}858{,}102.467$ ≈ $5{,}858{,}102$ in-kips/rad.

LOADINGS AT PILE TOP

$l = 50'$

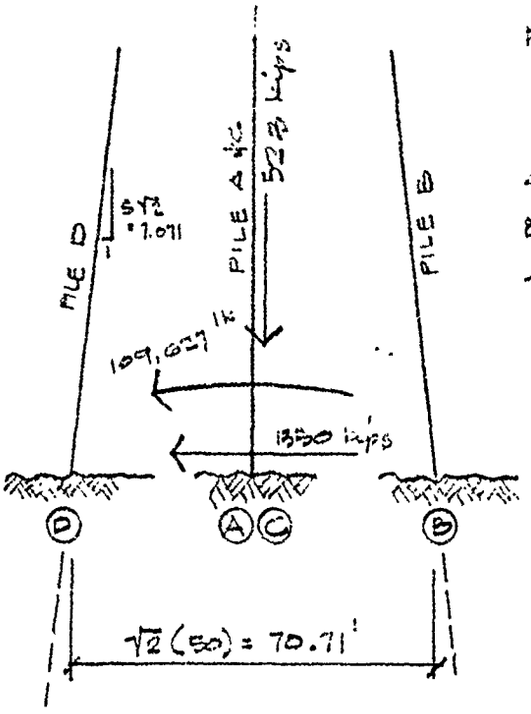

FORCES FROM COMPUTER PROGRAMS

DEAD LOAD = 522.5 k

	V	M
STRUCTURE	1248 k	98421 ik
BOAT LANDING	39.3 k	3416.3 ik
STAIRS	63.7 k	7789.8 ik
TOTALS	1350 k	109,627.1 ik

CHECK COMPRESSION:

Moment about B axis

$$M = 0 = M_{OVERHAUL} + M_D - M_{AC} - M_D$$

$$= 109{,}627 + \frac{523 \times 70.71}{2} - \frac{523}{2} \times \frac{70.71}{2} - 70.71(V_d)$$

$$V_d = \left[109{,}627 + \frac{523}{2} \times \frac{70.71}{2}\right] \frac{1}{70.71} = 1681.1^k$$

$$h_d = 1350^k/4 = 337.5^k$$

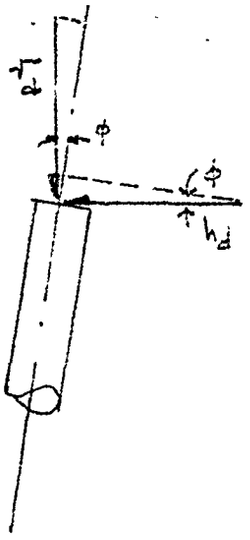

Axial Compression

$$A_d = V_d \cos\phi + h_d \sin\phi$$

$$= 1681.1 \times \frac{5\sqrt{2}}{\sqrt{51}} + 337.5 \times \frac{1}{\sqrt{51}} = 1664.5 + 47.3$$

$$= 1711.8^k \text{ compression}$$

Shear

$$S_d = h_d \cos\phi - V_d \sin\phi$$

$$= 337.5 \times \frac{5\sqrt{2}}{\sqrt{51}} - 1681.1 \times \frac{1}{\sqrt{51}} = 334.17 - 235.7$$

$$= 98.3^k$$

CHECK TENSION $\qquad l = 50'$

Moment about D axis

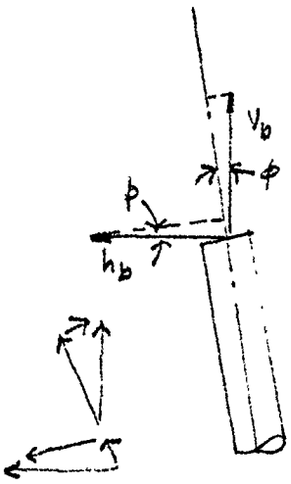

$$M = 0 = M_{W+WN} - M_P + M_{AC} - M_B$$

$$= 109{,}627 - 523 \times \frac{70.71}{2} + \frac{523}{2} \times \frac{70.71}{2} - 70.71 V_b$$

$$\therefore V_b = \left[109{,}627 - \frac{523}{2} \times \frac{70.71}{2}\right] \frac{1}{70.71} = 1419.6^k$$

$$h_b = 1350/4 = 337.5^k$$

Axial Tension

$$A_b = V_b \cos\phi + h_b \sin\phi$$

$$= 1419.6 \times \frac{5\sqrt{2}}{\sqrt{51}} + 337.5 \times \frac{1}{\sqrt{51}} = 1405.0 + 47.3$$

$$= 1452.9^k \text{ tension}$$

Shear

$$S_b = h_b \cos\phi - V_b \sin\phi$$

$$= 337.5 \frac{5\sqrt{2}}{\sqrt{51}} - 1419.6 \frac{1}{\sqrt{51}} = 334.2 - 198.8$$

$$= 135.4^k$$

with 1711.8^k compression
1452.9^k tension

Required Penetration = 180'

By JMA Client U.S. NAVY Subject STRUCTURAL CONCEPT ANALYSIS

Date 4.21.76 Job No. 21-271-92 Calculation LATERALLY LOADED PILE

LOADINGS AT PILE TOP

$l = 60'$

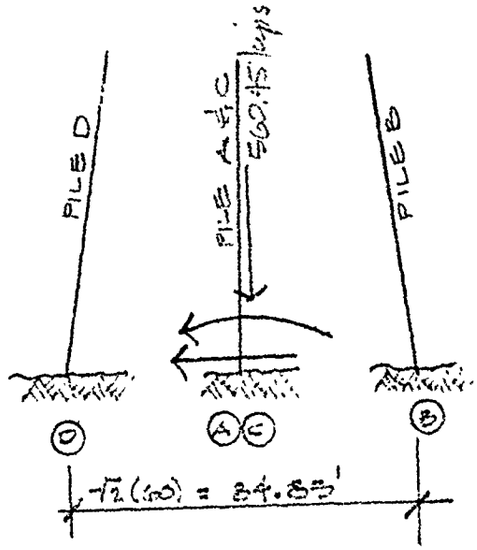

FORCES FROM COMPUTER PROGRAMS

DEAD LOAD = 560.45^k

	V	M
STRUCTURE	1310.5^k	104,024.5$^{'k}$
BOAT LANDING	39.3^k	3416.3$^{'k}$
STAIRS	62.7^k	7789.3$^{'k}$
TOTALS	1412.5^k	115,230.0$^{'k}$

COMPRESSION

Moment about B axis

$$M = 0 = M_{BOATWN} + M_P - M_{AC} - M_D$$

$$= 115{,}230.0 + \frac{560.45 \times 84.85}{2} - \frac{560.45 \times 84.85}{2 \times 2} - 84.85(V_d)$$

$$\therefore V_d = \left[115{,}230.0 + \frac{560.45 \times 84.85}{2 \times 2}\right]\frac{1}{84.85} = 1498.2^k$$

$$h_d = 1412.5^k/4 = 353.125^k$$

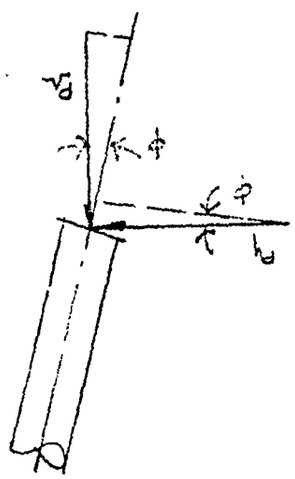

Axial Compression

$$A_d = V_d \cos\phi + h_d \sin\phi$$

$$= 1498.2 \times \frac{5\sqrt{2}}{\sqrt{51}} + 353.125 \times \frac{1}{\sqrt{51}}$$

$$= 1532.7^k \text{ COMPRESSION}$$

Shear

$$S_d = h_d \cos\phi - V_d \sin\phi$$

$$= 353.125 \times 5\sqrt{2}/\sqrt{51} - 1498.2 \times 1/\sqrt{51}$$

$$= 139.9^k$$

CHECK TENSION

$l = 60'$

Moment about D axis

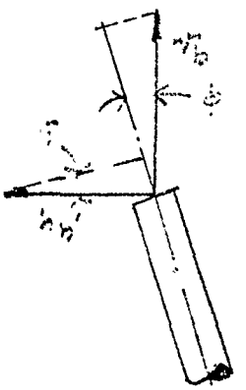

$$M_D = 0 = M_{overturn} - M_p + M_{AC} - M_B$$

$$= 115,230.6 - \frac{500.4 \times 84.85}{2} + \frac{500.4 \times 84.85}{2 \times 2} - 35.95(V_b$$

$$\therefore V_b = \left[115,230.6 - \frac{500.4 \times 84.85}{2 \times 2}\right] \frac{1}{84.85} = 1217.94^k$$

$$h_b = 1412.5 \cdot .4 = 353.125^k$$

Axial Tension

$$A_b = V_b \cos\phi + h_b \sin\phi$$

$$= 1217.94 \times 5\sqrt{2}/51 + 353.125 \times 1/51$$

$$= 1255.4^k \text{ tension}$$

Shear

$$S_b = h_b \cos\phi - V_b \sin\phi$$

$$= 353.125 \times 5\sqrt{2}/51 - 1217.94 \times 1/51$$

$$= 179.1^k$$

Required Pile Penetration

with $C = 1532.9^k$
$T = 1255.4^k$

Required Pile Penetration = 162.5'

CREST OFFSHORE, INC.

By [illegible] Client [illegible] Subject [illegible]

Date [illegible] Job No. [illegible] Calculation [illegible]

Sheet 10.7 of 11 PILES

SECTION 10.3
PILE DESIGN

36-IN. DIAMETER PIPE PILES

Coordinates of Curve Points

Penetration inches	Typical Curve	y_1	P_1	y_2	P_2	y_3	P_3	y_4	P_4	y_5	P_5	y_6	P_6	y_7	P_7	y_8	P_8
0 and 60	C	0	0	20.	0												
96	A	0	0	0.016	85	0.070	120	0.18	145	0.30	168	0.50	190	1.13	244	20.0	244
168	A	0	0	0.009	222	0.063	574	0.17	926	0.29	1194	0.50	1544	1.13	2471	20.0	2471
232	A	0	0	0.017	637	0.071	1267	0.18	1975	0.30	2521	0.50	3244	1.13	5190	20.0	5190
264	A	0	0	0.081	320	0.063	857	0.17	1390	0.29	1792	0.50	2320	1.13	3710	20.0	3710
336	A	0	0	0.012	606	0.066	1374	0.17	2189	0.29	2809	0.50	3626	1.13	5803	20.0	5803
420	A	0	0	0.012	756	0.066	1716	0.17	2734	0.29	3509	0.50	4529	1.13	7247	20.0	7247
432	A	0	0	0.038	2492	0.090	3743	0.19	5396	0.30	6733	0.50	8537	1.13	13660	20.0	13660
672	A	0	0	0.038	3877	0.090	5824	0.19	8395	0.30	10475	0.50	13280	1.13	21248	20.0	21248
673	B	0	0	0.054	664	0.13	900	0.34	1222	0.84	1658	2.10	2250	20.0	2250		
936	B	0	0	0.054	664	0.13	900	0.34	1222	0.84	1658	2.10	2250	20.0	2250		
937	A	0	0	0.038	5395	0.090	8107	0.19	11692	0.30	14588	0.50	18497	1.13	29596	20.0	29596
1752	A	0	0	0.038	10109	0.090	15181	0.19	21887	0.30	27307	0.50	34624	1.13	55398	20.0	55398

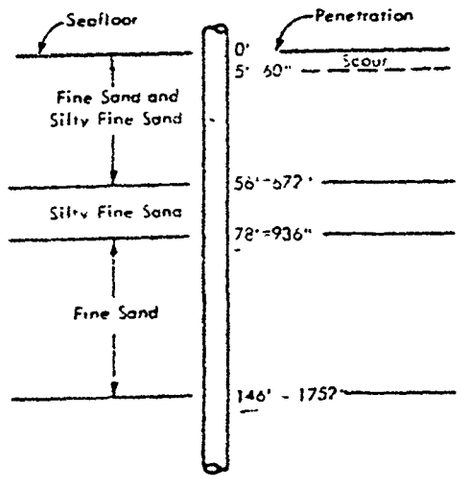

STRATIGRAPHY ASSUMED FOR P-Y DATA

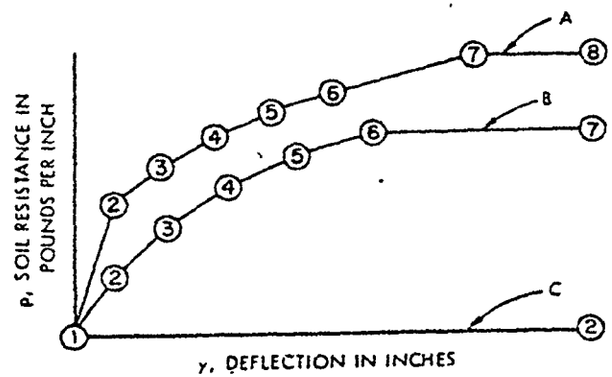

TYPICAL CURVES

P-Y DATA

Boring 1

MINIMUM WALL THICKNESS REQUIREMENTS

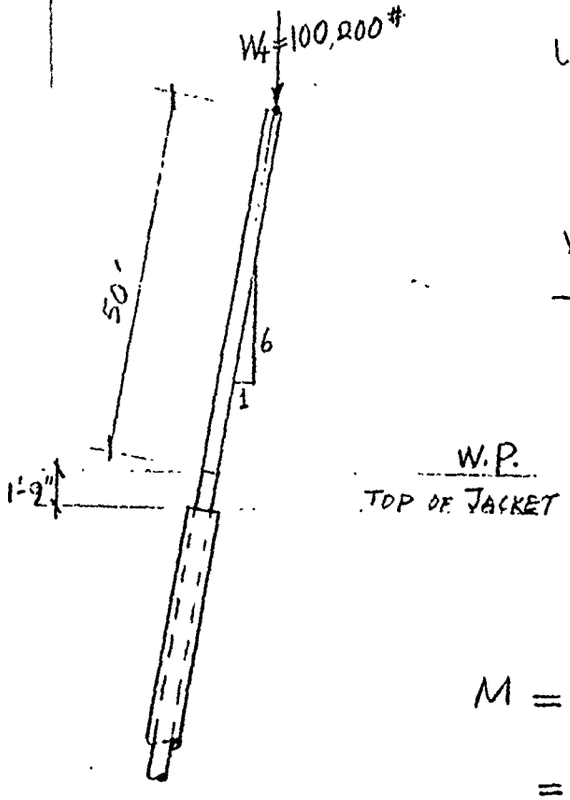

Use Vulcan 060 Hammer

Wt. of Hammer = 60,000 LBS

Wt. of Pile Cap = 40,200 LBS

Total Wt. = 100,200 LBS

Bending moment at the top of jacket leg is

$$M = 100{,}200 \times \left[\frac{1}{6}(51.75)\right]$$

$$= 864{,}225 \text{ ft-lbs}$$

Axial Compression at the top of jacket leg (Piling)

$$P = 100{,}200 \times \frac{6}{\sqrt{37}} = 98{,}837 \text{ LBS}$$

36" O.D. x 1.25" WT $\quad I = 20{,}630 \text{ in}^4$

$$A = 136.5 \text{ in}^2$$

Combined Stress $\quad \sigma_c = \frac{M\frac{d}{2}}{I} + \frac{P}{A}$

$$\sigma_c = \frac{(864{,}225 \times 12) \times 18}{20{,}630} + \frac{98{,}837}{136.5}$$

$$\sigma_c = 9,773 \text{ psi}$$

$$= 9.8 \text{ ksi}$$

Use Impact factor of 2 for the dynamic effect on piles during driving:

$$\sigma_{cd} = 2 \times \sigma_c = 19.6 \text{ ksi} < 22 \text{ ksi}$$

Say O.K.

CREST OFFSHORE, INC.

Sheet 19 of 4 PLS

By S. CHEN Client U.S. NAVY Subject STRUCTURAL CONCEPT ANALYSIS

Date 4-14-76 Job No. 21-77-92 Calculation LATERALLY LOADED PILE

ULTIMATE STATIC PILE CAPACITY, KIPS
ESTIMATED DRIVING RESISTANCE, KIPS

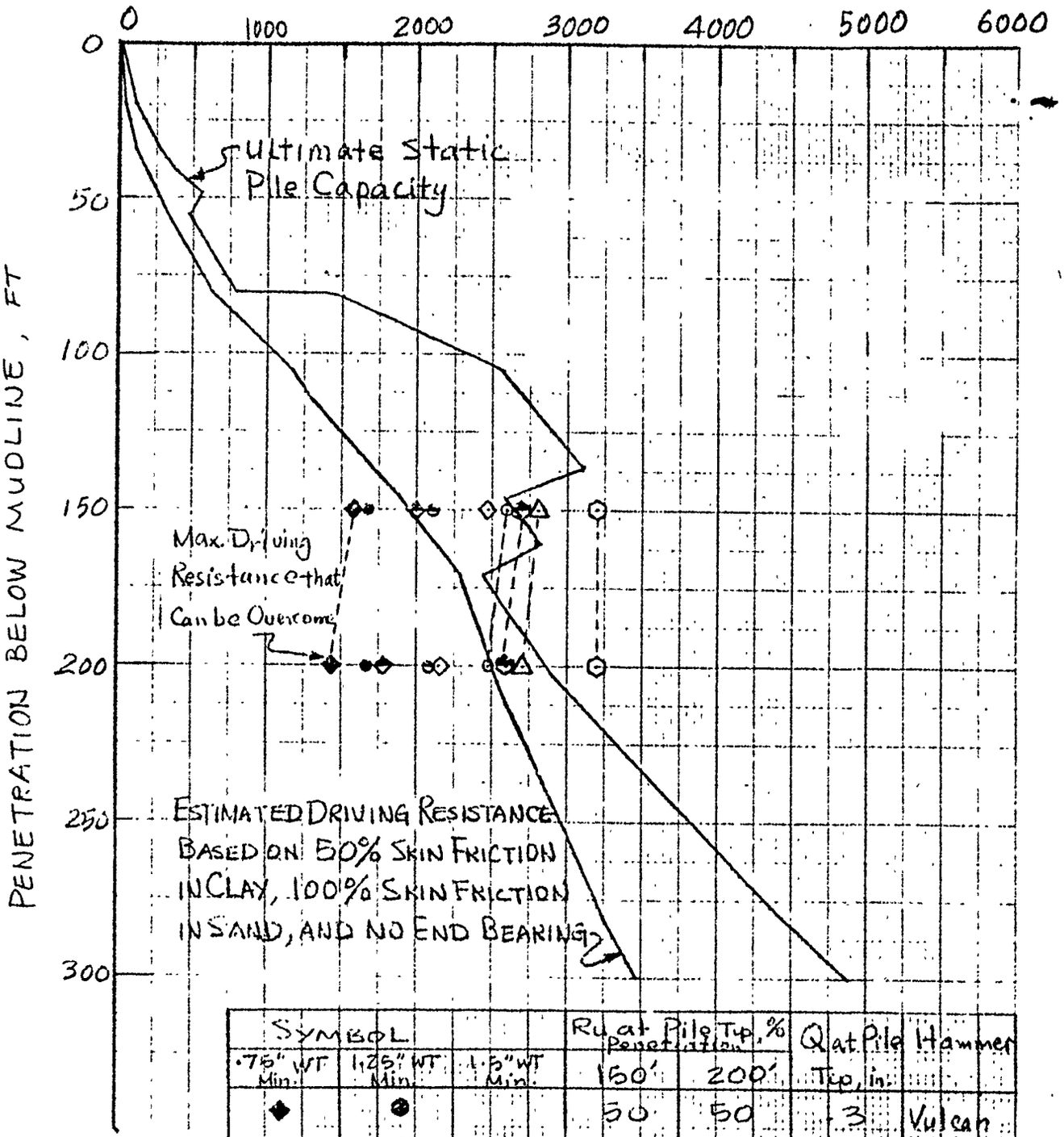

SYMBOL			Ru at Pile Tip, % Penetration		Q at Pile Tip, in.	Hammer
.75" WT Min.	1.25" WT Min.	1.5" WT Min.	150'	200'		
◆	●		50	50	.3	Vulcan
◆	●		35	35	.1	040
◇	○	△	14	14	.025	
		●	35	35	.1	Vulcan
		○	14	14	.025	060

36-IN. DIAMETER PIPE PILES

CREST OFFSHORE, INC.

Sheet 10.11 of 4 PILE

By WVL Client U.S. NAVY Subject STRUCTURAL CONCEPT ANALYSIS

Date 4.21.76 Job No. 27-771-12 Calculation LATERALLY LOADED PILE

ESTIMATED PENETRATION - 180 FT. BELOW MUDLINE

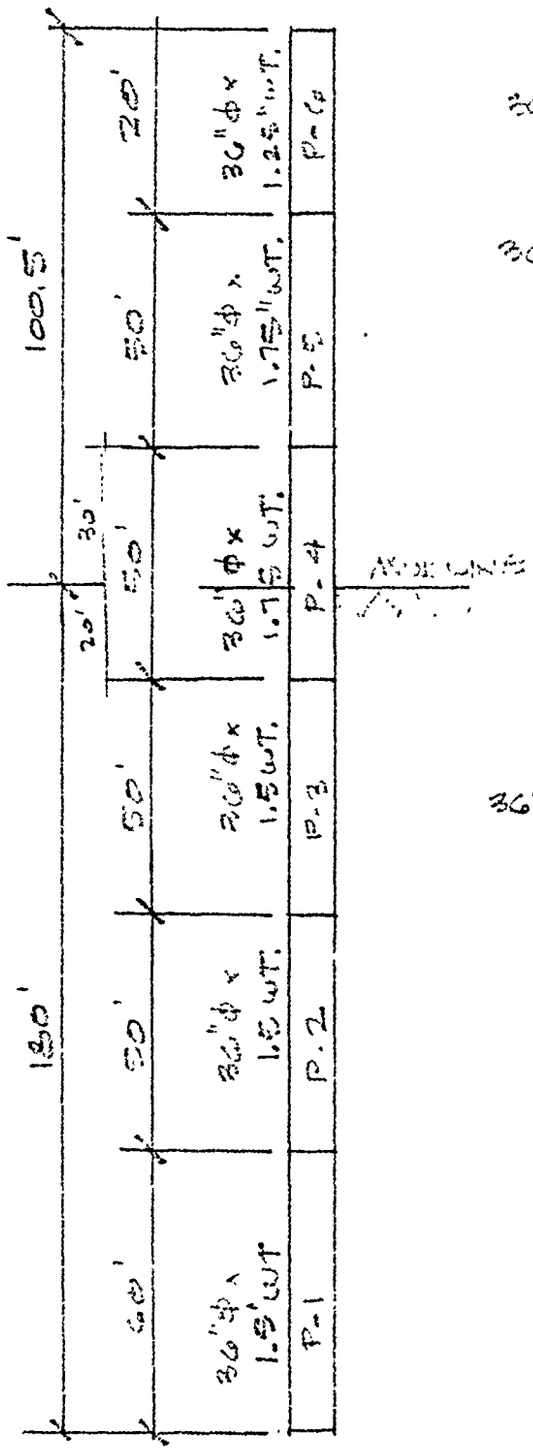

36"φ x 1.25" WT $I = 20,025.14\ in^4$
$A = 130.46\ in^2$

36"φ x 1.75" WT. $I = 27,690.04\ in^4$
$A = 188.30\ in^2$

36"φ x 1.5" WT. $I = 24,234.25\ in^4$
$A = 162.58\ in^2$

CREST OFFSHORE, INC.

By LWS Client USDAY Subject BIAXIAL CONCRETE ANALYSIS

Date 4-22-76 Job No. 21-171-02 Calculation LATERAL LOADED PILE

Sheet 12 of 4 PILE

SOUTH 10.4

RESULTS

STA.	DIST. ALONG PILE	DEFL.	SLOPE	MOMENT	BEAM COLUMN SHEAR	APPLIED NON LINEAR LATERAL LOADING	COMBINED STRESS(MAX.)
0	0.0	0.534	-0.1671D-02	-0.9790 04		0.0	-15.860
1	36.000	0.466	-0.2016D-02	-0.6120 04	102.198	0.0	-12.948
2	72.000	0.389	-0.2201D-02	-0.2440 04	102.460	0.0	-10.428
3	108.000	0.308	-0.2227D-02	0.1260 04	97.409	-6.083	-9.536
4	144.000	0.229	-0.2097D-02	0.4720 04	85.209	-21.506	-11.064
5	180.000	0.157	-0.1835D-02	0.7390 04	57.949	-31.771	-13.273
6	216.000	0.097	-0.1522D-02	0.8637 04	22.416	-38.104	-14.125
7	252.000	0.050	-0.1041D-02	0.8005 04	-15.701	-36.822	-15.051
8	288.000	0.019	-0.5670D-03	0.7760 04	-46.958	-24.422	-15.111
9	324.000	0.001	-0.3048D-03	0.5620 04	-60.675	-1.983	-13.374
10	360.000	-0.006	-0.1251D-03	0.3400 04	-55.564	12.881	-11.573
11	396.000	-0.008	-0.7251D-06	0.1620 04	-40.677	17.261	-10.1[illegible]
12	432.000	-0.006	0.5108D-04	0.4670 03	-24.453	15.337	-9.[illegible]
13	468.000	-0.004	0.5923D-04	-0.1380 03	-11.390	[illegible].803	-8.[illegible]7
14	504.000	-0.002	0.4706D-04	-0.3530 03	-2.916	6.105	-8.[illegible]33
15	540.000	-0.001	0.2968D-04	-0.3480 03	1.409	2.094	-8.581
16	576.000	-0.000	0.1482D-04	-0.2520 03	2.824	0.296	-8.768
17	612.000	0.000	0.4992D-05	-0.1440 03	2.633	-0.704	-8.148
18	648.000	0.000	-0.1323D-06	-0.6220 02	1.827	-0.921	-7.930
19	684.000	0.000	-0.1095D-05	-0.1290 02	0.954	-0.749	-7.760
20	720.000	0.000	-0.2083D-05	0.9380 01	0.385	-0.466	-7.564
21	756.000	0.000	-0.1482D-05	0.1480 02	0.040	-0.221	-7.434
22	792.000	0.000	-0.8109D-06	0.1230 02	-0.101	-0.060	-7.279
23	828.000	-0.000	-0.3202D-06	0.7530 01	-0.122	0.019	-7.122
24	864.000	-0.000	-0.4771D-07	0.3460 01	-0.092	0.043	-6.966
25	900.000	-0.000	0.6108D-07	0.9260 00	-0.052	0.038	-6.811
26	936.000	-0.000	0.7777D-07	-0.2530 00	-0.021	0.024	-6.657
27	972.000	-0.000	0.5737D-07	-0.5700 00	-0.003	0.011	-6.505
28	1008.000	-0.000	0.3120D-07	-0.4850 00	0.004	0.003	-6.350
29	1044.000	0.000	0.1193D-07	-0.2920 00	0.005	-0.001	-6.197
30	1080.000	0.000	0.1546D-08	-0.1270 00	0.004	-0.002	-6.043
31	1116.000	0.000	-0.2331D-08	-0.2920-01	0.002	-0.002	-5.890
32	1152.000	0.000	-0.2737D-08	0.1280-01	0.001	-0.001	-5.736
33	1188.000	0.000	-0.1883D-08	0.2160-01	0.000	-0.000	-5.583
34	1224.000	0.000	-0.9344D-09	0.1660-01	-0.000	-0.000	-5.2[illegible]
35	1260.000	-0.000	-0.2987D-09	0.9000-02	-0.000	0.000	-4.969
36	1296.000	-0.000	0.6603D-11	0.3310-02	-0.000	0.000	-4.6[illegible]
37	1332.000	-0.000	0.9695D-10	0.3300-03	-0.000	0.000	-4.35[illegible]
38	1368.000	-0.000	0.8767D-10	-0.7040-03	-0.000	0.000	-4.0[illegible]
39	1404.000	-0.000	0.5159D-10	-0.7510-03	0.000	0.000	-3.742
40	1440.000	0.000	0.2112D-10	-0.4780-03	0.000	-0.000	-3.436
41	1476.000	0.000	0.3997D-11	-0.2130-03	0.000	-0.000	-3.1[illegible]
42	1512.000	0.000	-0.2557D-11	-0.5170-04	0.000	-0.000	-2.822
43	1548.000	0.000	-0.3851D-11	0.1560-04	0.000	-0.000	-2.51[illegible]
44	1584.000	0.000	-0.2344D-11	0.2900-04	0.000	-0.000	-2.20[illegible]
45	1620.000	0.000	-0.1096D-11	0.2130-04	-0.000	-0.000	-1.9[illegible]
46	1656.000	-0.000	-0.3043D-12	0.1060-04	-0.000	0.000	-1.575
47	1692.000	-0.000	0.4929D-13	0.3050-05	-0.000	0.000	-1.2[illegible]

SECTION 10.5

EQUIVALENT PILE PROPERTIES

$l = 50'$
from GD worksheet

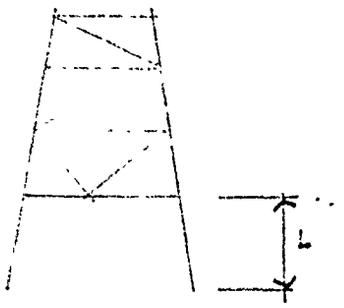

L = equivalent pile length

$$= \frac{\text{Mudline Moment}}{\text{Mudline Shear}} = \frac{M_M}{P_M}$$

$$L = \frac{9790^{\text{"k}}}{93.8^{k} \times 12''/'} = \frac{99.1''}{12''/'} = 8.26'$$

A = cross sectional area of "equivalent pile"

$$= \frac{PL}{\Delta E}$$

where $P = 1712^{\text{kip}}$ comp.

$L = 8.26'$ (see above)

$E = 24 \times 10^3$ ksi

$$\Delta = \Sigma \frac{P_v L_v}{A_v E}$$

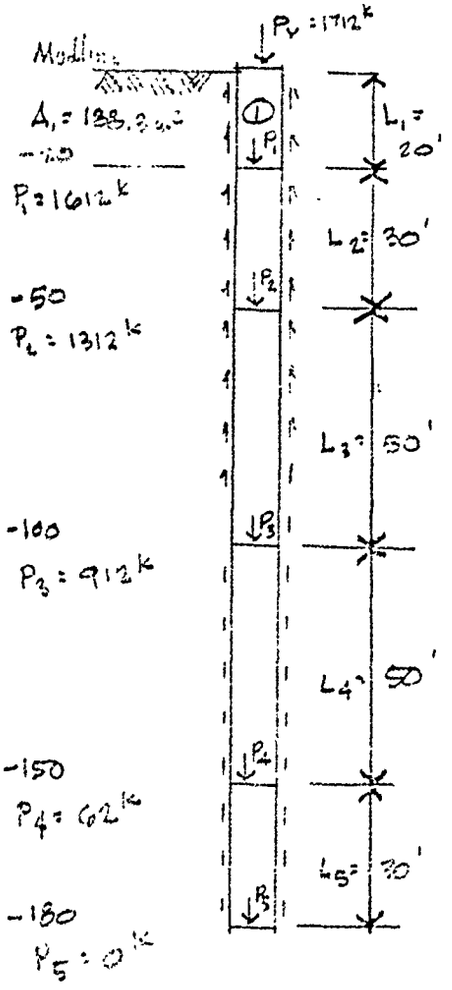

$$\Delta = \Sigma \frac{PL}{AE} = \frac{1}{E}\left[\frac{P_v L_1}{A_1} + \frac{P_1 L_2}{A_2} + \frac{P_2 L_3}{A_3} + \frac{P_3 L_4}{A_4} + \frac{P_4 L_5}{A_5}\right]$$

$$= \frac{1}{E}\left[\frac{1712(20)}{188.3} + \frac{1612(30)}{162.6} + \frac{1312(50)}{162.6} + \frac{912(50)}{162.6} + \frac{62(30)}{162.6}\right]$$

$$= \frac{1174.6}{E}$$

$$\therefore A = \frac{PL}{\Delta E} = \frac{1712^k \times 8.26'}{\frac{1174.6}{E} \times E} \qquad \left(\frac{k \cdot FT}{k \cdot FT/in^2} = in^2\right)$$

Area $A = 12.04\ in^2$

$\ell = 50'$

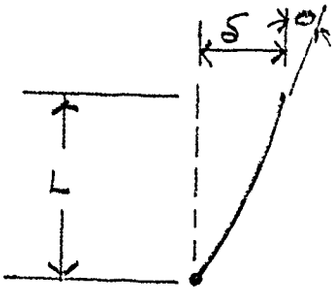

I = equivalent pile moment of inertia

$$= \frac{VL^3}{3E(\delta - \theta L)}$$

where $V = 18.3^k$ $\quad E = 29 \times 10^3$ ksi

$L = 8.26'$

$\delta = 0.534$ in

$\theta = 0.001671$

$$\therefore I = \frac{18.8^k \times (8.26^{FT})^3 \times 1728 \ in^3/ft^3}{3(29 \times 10^3 \text{ ksi})(\underbrace{0.534 - 0.001671 \times 8.26 \times 12}_{0.368})}$$

$= 3002.18 \ in^4$ $\qquad \frac{\cancel{in^2} \times \cancel{ft^3} \times in^3}{\cancel{k} \times \cancel{k} - \cancel{ft^3}} = in^4$

USE $L = 8.26'$

$A = 12.04 \ in^2$

$I = 3002 \ in^4$

SECTION 11

LOADINGS

11.1 INTRODUCTION

At this point the SEALOAD data update file was used to input the loadings from the stairway, boatlanding, and decks on the same tape with the structure loading from Section 5. The combined loading conditions were also input to this tape.

When the final tape had been checked and edited the STRAN space frame analysis was run. The results of that run can be found in Exhibit 'B' of this report.

DATA PREPARATION

1. SEALOAD Program will calculate wind and wave, dead weight of structure adjusted by the buoyancy effect.
2. Additional wind and wave forces due to boat landing and stairways --- input as joint loads
3. Additional dry weight of the superstructure:
   a. Secondary deck beams (joists)
   b. Floor plates
   c. Handrails, kickplates, safety nets, etc., -- input as joint loads

11.3 LOADINGS

#1
- 1a. - WIND & WAVE on JACKET & SUPERSTRUCTURE BOTH APPROACH AT 45° ANGLE
- 1b - DEAD LOAD on JACKET & SUPERSTRUCTURE DRY WT. + BUOYANCY

#2
- 2a - WIND & WAVE on BOAT LANDING & STAIRWAY BOTH APPROACH AT 45° ANGLE
- 2b - ADDITIONAL DEAD LOAD on SUPERSTRUCTURE EQUIP. DECK & TOP DECK

#3 - LIVE LOADS on SUPER STRUCTURE EQUIP DECK & TOP DECK

#4 - COMBINED LOADS #1 + #2

#5 - COMBINED LOADS #1 + #2 + #3

STRAN INPUT DATA LOAD # 2a

Boat Landing Forces

$$h = \frac{M}{V} = \frac{3416.28^{1k}}{39.30^{k}} = 86.93'$$

$$h_x = \frac{M_y}{V_x} = \frac{1656.9426^{1k}}{19.0504^{k}} = 86.9768'$$

$$h_y = \frac{M_x}{V_y} = \frac{-2987.5663^{1k}}{34.3700^{k}} = 86.9237'$$

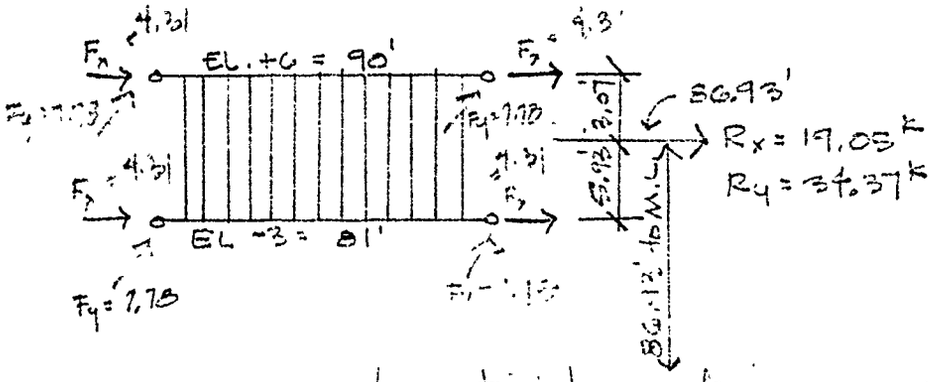

Assume joints are at elev +12 (96' elev. mudline)
and at elev -3 (66' elev. mudline)
∴ put moments into joints @ elev. +12

equivalent $V_x = \frac{1656.94^{1k}}{96} = 17.26^k$

$V_y = \frac{2987.57}{96} = 31.12^k$

$R_x = \frac{V_x}{2} = \frac{17.26}{2} = 8.63^k$

$R_y = \frac{V_y}{2} = \frac{31.12}{2} = 15.56^k$

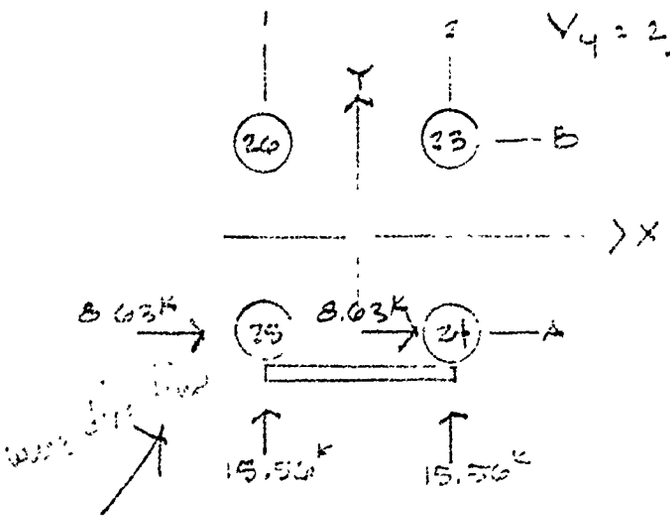

CREST OFFSHORE, INC.

Sheet 11.05 of 4 PILE

By WVS Client U.S. NAVY Subject STRUCTURAL CONCEPT ANALYSIS
Date 4-22-76 Job No. 27-7142 Calculation LOAD PLAN

STRAN INPUT DATA LOAD #2a

STRUCTURE

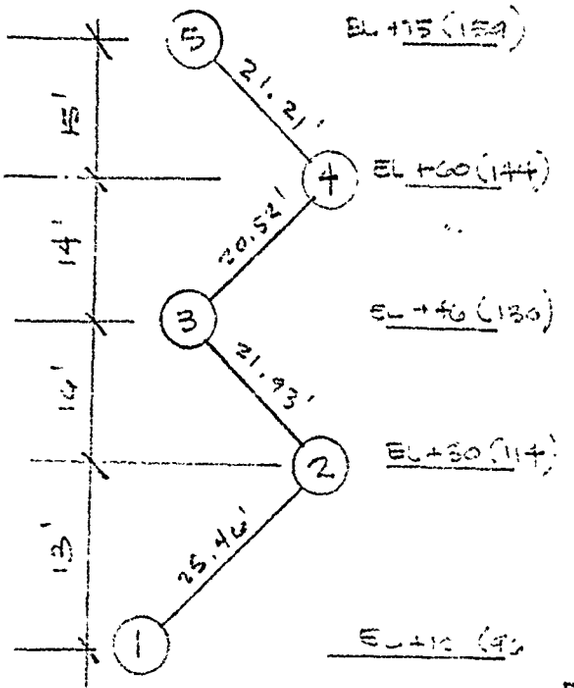

$h = \frac{M_x}{V} = \frac{7789.7554^{'k}}{62.6689^{k}} = 124.300'$

$h_x = \frac{M_y}{V_x} = \frac{3467.1854}{27.9532} = 124.035'$

$h_y = \frac{M_x}{V_y} = \frac{6975.5942}{56.0893} = 124.366'$

Neglect joints 1 & 5 at 144 & 130

NEGLECT JOINTS 1 & 5 AS THEY TAKE ONLY A SMALL AMOUNT OF THE LOAD
ASSUME JOINTS 2, 3, & 4 TAKE EQUAL AMOUNTS OF LOAD,

FORCES IN X-DIRECTION

$V_{2x} = V_{3x} = V_{4x} = V_x$

V_{1x} is distributed btwn joints 1 & 3

$\therefore V_{3x} = V_x + \frac{1}{2}V_x = 1.5V_x$

$V_{1x} = \frac{1}{2}V_{2x} = 0.5V_x$

$M_y = 3467.2 = 144 \times V_x + 130 \times 1.5V_x + 96 \times 0.5V_x$

$V_x = \frac{3467.2}{387} = 8.96^{k}$

$V_{4x} = 8.96^{k}$

$V_{3x} = 1.5 \times 8.96^{k} = 13.44^{k}$

$V_{1x} = 0.5 \times 8.16 = 4.48^{k}$

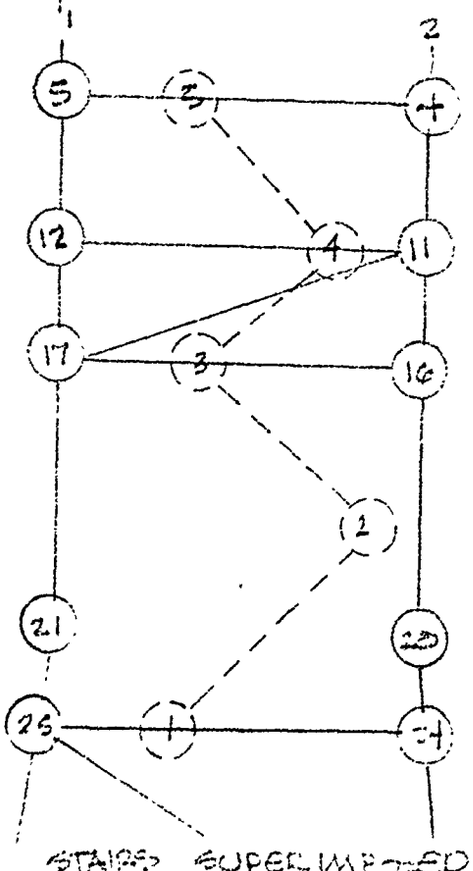

STAIRS SUPERIMPOSED ON STRUCTURE

CREST OFFSHORE, INC.

Sheet 11.06 of 4 PILES

By WWS Client U.S. NAVY Subject STRUCTURAL CONCEPT ANALYSIS

Date 4-26-76 Job No. 27-271-92 Calculation LOADING

TRY LOADING FROM WAVE PROFILE

LOAD ON MBR'S MBR	from	to	wave force	avg d.	force in X	force in Y	length	moment in X	moment in Y
1-2	96	to 102	359	99	x .140	-	x 8.49 x 2'	= 202	-
				"	x	- .240	x 8.49 x 2	= —	
	102	- 108	399	105	x .133	-	x 8.49 x 2	= 237	
				"	x	- .266	x 8.49 x 2	= —	
	108	- 114	451	111	x .150	-	x 8.49 x 2	= 283	
				"	x	- .300	x 8.49 x 2	= —	
2-3	114	- 119.3	505	116.7	x .168	-	x 7.31 x 2	= 287	
				"	x	- .337	x 7.31 x 2	= —	
	119.3	- 124.7	563	122	x .188	-	x 7.31 x 2	= 335	
				"	x	- .375	x 7.31 x 2	= —	
	124.7	- 130	638	127.4	x .213	-	x 7.31 x 2	= 397	
				"	x	- .425	x 7.31 x 2	= —	
3-4	130	- 134	705	132	x .235	-	x 5.86 x 2	= 364	
				"	x	- .470	x 5.86 x 2	= —	
	134	- 138	765	136	x .255	-	x 5.86 x 2	= 400	
				"	x	- .510	x 5.86 x 2	= —	
	138	- 142	844	140	x .281	-	x 5.86 x 2	= 461	
				"	x	- .563	x 5.86 x 2	= —	
	142	- 144	180	143	x .060	-	x 2.93 x 2	= 50	
				"	x	- .120	x 2.93 x 2	= —	
4-5	144	- 159	183	151.5	x .061	-	x 21.21 x 2	= 392	
				"	x	- .122	x 21.21 x 2	= —	
								3413.6	6827.5
								≈ 3467	6975
								Y moment	X moment

FORCE TO DIRECTION
BIAT

1 X $\left(0.12^{15} \times 8.49' + .133 \times \frac{8.49}{2}\right) \times 2 = 3.167^{k}$ } 7.081 resultant.
Y $\downarrow \times 2 = 6.333^{k}$

2 X $\left(.133 \times \frac{8.49}{2} + .15 \times 8.49 + .168 \times 7.31 + .188 \times \frac{7.31}{2}\right) 2 = 7.507$ } 16.785 result.
Y $\downarrow \times 2 = 15.013$

3 X $\left(.188 \times \frac{7.31}{2} + .213 \times 7.31 + .235 \times 5.86 + .255 \times \frac{5.86}{2}\right) 2 = 8.74^{k}$ } 19.54 resultant.
Y $\downarrow \times 2 = 17.474$

4 X $\left(.255 \times \frac{5.86}{2} + .281 \times 5.86 + .06 \times 2.93 + .061 \times \frac{21.21}{2}\right) 2 = 6.433$ } 14.38 resultant
Y $= 12.866$

5 X $\left(.061 \times \frac{21.21}{2}\right) 2 = 1.294$ } 2.59 resultant.
Y $= 2.588$

CHECK OVERTURNING MOMENT

JOINT	ELEV.	RESULT.	X	MOM. R.	MOM. Y ABOUT Y	MOM. X ABOUT X
1	96	7.081		679.8		
			3.167		304.0	
2	114	16.795		1913.5		
			7.507		855.3	
3	130	19.54		2540.2		
			8.74		1136.2	
4	144	14.38		2070.7		
			6.433		926.4	
5	159	2.89		459.5		
			1.294		205.7	
				7663.7	3428.1	6356
				≈ 7789.8	≈ 3467.2	6975.0
			DIFFERENCE =		39.1	119.3

IF DIFF. IS APPLIED EQUALLY TO JOINTS 2,3,4

then $V_x = \frac{39.1}{114+130+144} = 0.1^k$ ADDED TO EA JOINT

$F_y = 2.588^k$ $V_y = 119.3/388 = 0.3^k$ ADDED TO EA JOINT

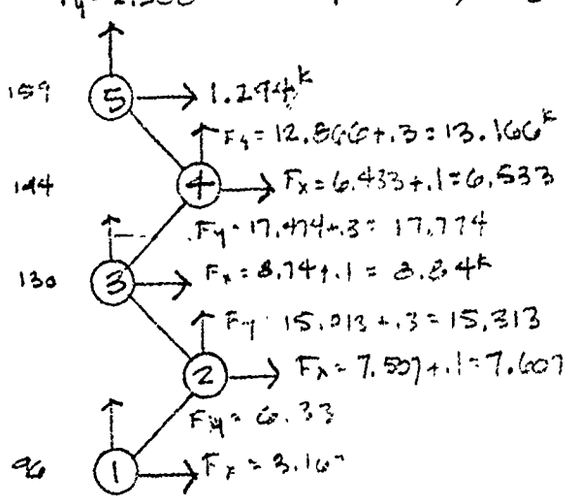

JOINT LOADS FROM STAIRWAY

IN ORDER TO APPLY LOADS TO STRUCTURES JOINT 2 LOADS WILL HAVE TO BE SPLIT BTWN JOINT 1 & JOINT 3

∴ JOINT 1: $F_x = 3.167 + 7.607 \frac{16}{34} = 6.747$

$F_y = 6.33 + 15.313 \times \frac{16}{34} = 13.530$

JOINT 3 $F_x = 8.84 + 7.607 \times \frac{18}{34} = 12.867$

$F_y = 17.774 + 15.313 \frac{18}{34} = 25.880$

∴ $M_x = 3466.928 = 3467$ from computation

$M_y = 6971.378 \approx 6975$ " "

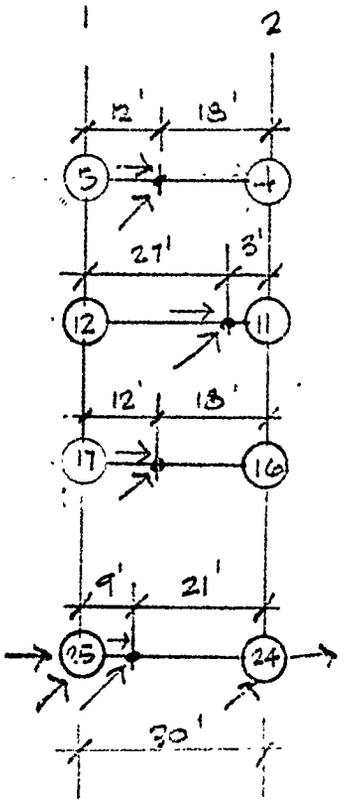

LOADS FROM STAIRWAY JOINT 5 ON MBR 5-4

$F_x = 1.294^k$

$F_y = 2.588^k$

LOADS FROM STAIRWAY JOINT 4 ON MBR 12-11

$F_x = 6.583^k$

$F_y = 13.166^k$

LOADS FROM STAIRWAY JOINT 3 & 2 ON MBR 17-16

$F_x = 12.867^k$

$F_y = 25.880^k$

LOADS FROM STAIRWAY JOINT 1 & 2 ON MBR 25-24

$F_x = 6.747^k$

$F_y = 13.536^k$

LOADS FROM EXIT LANDING ON MBR 25-24

$F_x = 8.03^k$ EA. END

$F_y = 15.50^k$ EA. END

STRAN INPUT DATA - LOAD #2b

DEAD LOADS THRU DECKS

UPPER DECK

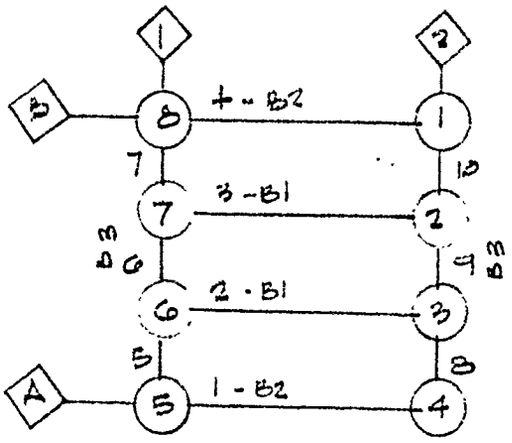

DEAD LOAD:

HULL'S EL	=	10.2 PSF
DECKS	=	1.8
MISC (CHANGE RAILS, HOOPS)	=	3.0
		15.0 PSF

$w_{B1} = (0.015 \times 10) = 0.150$ K/'

$w_{B2} = (0.015 \times 5) = 0.075$ K/'

$w_{B3} = 0$

EQUIPMENT DECK

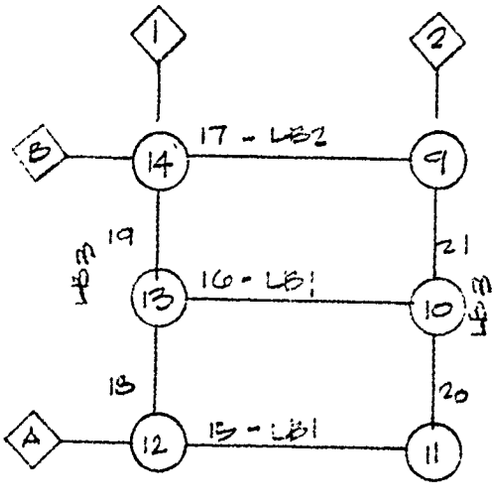

DEAD LOAD = same as above = 15.0 PSF

$w_{LB1} = (0.015 \times 7.5') = 0.113$ K/'
(13-10 & 12-11)

$w_{LB2} = 0$
(14-9)

$w_{LB3} = 0$
(12-13
13-14
11-12
10-9)

STRAN INPUT DATA - LOAD #3

LIVE LOADS from DECKS

UPPER DECK

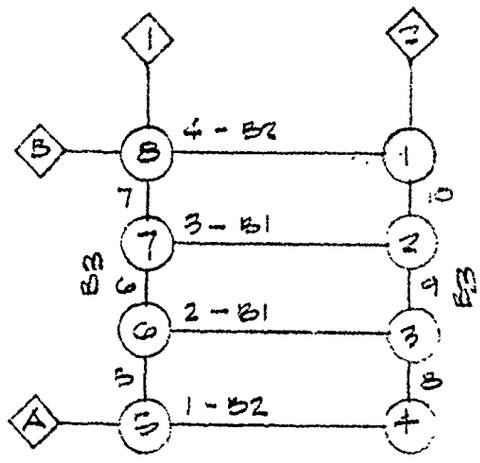

LIVE LOAD = 100 PSF

$\omega_{B1} = 0.1 \times 15 = 1.5^{K}/_{1}$
on 6-3 & 7-2

$\omega_{B2} = 0.1 \times 7.5 = 0.75^{K}/_{1}$
on 5-4 & 8-1

$\omega_{B3} = 0$

EQUIPMENT DECK

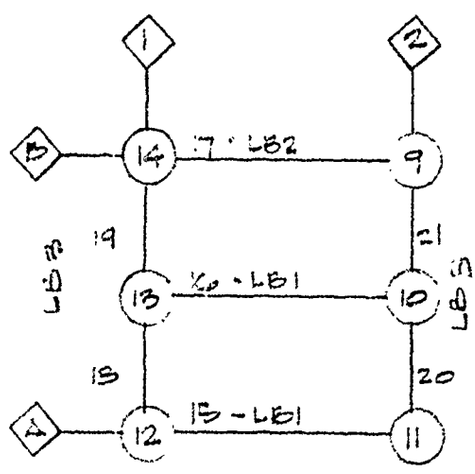

LIVE LOAD = 150 PSF

$\omega_{LB1} = 0.150 \times 7.5' = 1.125^{K}/_{1}$
on 13-10
12-11

$\omega_{LB2} = 0$

$\omega_{LB3} = 0$

SECTION 12

SPACE FRAME ANALYSIS

12.1 INTRODUCTION

The results of the STRAN space frame analysis, found in Exhibit 'B' of this report show the four-pile structure with a jacket base spacing of 50 ft to work, with a few exceptions, for member and pile sizes chosen.

Section 12.2 discusses the differences between the deflection at mudline of the STRAN run and that of the LATERALLY LOADED PILE run.

Section 12.3 shows all members that have a unity check greater than 1.0. Since the storm forces which produce these stresses are temporary, all unity checks less than 1.33 are assumed acceptable. Members with unity checks greater than 1.33 are discussed in 12.4.

Section 12.5 shows a typical elevation of the structure with final selected member sizes.

12.2 DEFLECTIONS

DEFLECTION AT MUDLINE

$\Delta = \sqrt{(0.520)^2 + (0.540)^2} = 0.154''$

the amount towards the 0.534" from the pile

HORIZONTAL TOTALS AT SUPPORTS

LOADING CONDITION 4

JOINT	F_x	F_y	Resultant	F_z	
101	-99.92 k	-147.40 k	-178.15 k	206.31 k	
102	-243.82 k	-245.21 k	-344.44	-1284.44 k	TENSION
103	-203.25 k	-275.30 k	-331.37	1515.58 k	COMPRESSION
104	-135.75 k	-120.52 k	-183.13	105.78 k	
total	-745.85 k	-787.44 k	1087.44 k	543.23 k	

COMPRESSION 1515.58 k ≈ 1711.5 k used for ⅓ of laterally loaded pile
TENSION 1284.44 ≈ 1452.9 k " " " " " "
SHEAR 331.37 ≈ 387.5 k used for ⅓ of laterally loaded pile.

CONCLUSION - THE RESULTS OF THE STRAN COMPUTER OUT-PUT COMPARES FAVORABLY WITH THE LOADS INPUT TO THE LATERALLY LOADED PILE PROGRAM. THIS DOES ASSUME THE PILINGS ARE GOOD AS DESIGNED IN THE LATERALLY LOADED PILING SECTION.

12.3 SUMMARY OF MEMBERS W/ UNITY CHECK > 1.0

MEMBER GROUP I.D.	MEMBER I.D.	MAX. U.C.	L.C.	FORCE Fx KIPS	MOMENT Mz IN-KIPS	MOM My IN-KIPS	MOM Mz
W18	12-11	173.21	5	-66.45	0	569.22	347.99
W13	14-9	1.38	1	-54.44	0	4.35	-23.47
DB3	17-14	1.07	5	} < 1.33 ∴ ACCEPTABLE			
HB3	17-16	1.75	4	-25.44	-5.44	-442.61	1847.23
JL1	25-21	2.06	5	-1230.93	626.87	14933.29	-62.12
JL1	23-19	1.92	5	1247.33	312.09	-12,416.47	-592.93
JL1	28-23	1.71	5	1301.3	144.2	-9,667.22	-529.57
JL1	27-30	1.05	5	LESS THAN 1.33 ∴ ACCEPTABLE			
JL1	26-22	1.04	4				
JL1	29-24	1.04	5				
JL1	30-25	1.21	5				
JL1	31-26	1.01	5				
P1	19-22	1.15	5	LESS THAN 1.33 ∴ ACCEPTABLE			
P1	32-60	1.15	5				
P1	56-54	1.10	4				
P1	21-56	1.10	4				
HB1	25-24	1.07	4				
DB1	31-27	1.31	5				
DB1	29-25	1.20	5				
DB1	28-24	1.05	5				
P2	68-76	1.01	5	APPROX. = 1.0 ∴ ACCEPTABLE			
P3	76-103	6.61	5	THESE ARE EQUIVALENT MEMBERS THEREFORE NEGLECT			
P3	80-102	5.04	4				
P3	82-101	1.49	5				
P3	78-104	1.15	1				

By JWS Client U.S. NAVY Subject STRUCTURAL CONCEPT ANALYSIS

Date 5.2.76 Job No. 32-71-92 Calculation ANALYSIS of STAAD RUN

12.4 OVERSTRESSED MEMBERS

GROUP W18

MEMBERS 12-11 AND 14-9 ARE SPANDREL BEAMS AT THE EQUIPMENT DECK LEVEL. THESE BEAMS WERE SIZED FOR THE LIVE AND DEAD LOADS ONLY FROM THE EQUIPMENT DECK. WHEN THE STAAD RUN WAS MADE THE REACTION FROM THE WAVE FORCE ON THE STAIRWAY WAS INPUT AT ABOUT THE CENTER LINE OF THE BEAM 12'-11'. NO PROVISION WAS MADE FOR THE KL/r OF THIS BEAM IN THE HORIZONTAL DIRECTION.

THE WAVE AND WIND FORCES PRODUCE TWISTING MOMENTS ABOUT THE STRUCTURE WHICH HAVE PRODUCED AXIAL LOADS IN THESE BEAMS ALSO.

THESE BEAMS WERE SIZED TO TAKE MOMENT IN THE GLOBAL Z DIRECTION ONLY. THEY MUST BE INCREASED IN SIZE TO TAKE MOMENT IN BOTH DIRECTIONS PLUS AXIAL LOAD.

with P: 63.45^k M_Y = 560.22$^{'k}$ M_x = 347.99$^{'k}$

try W18x105

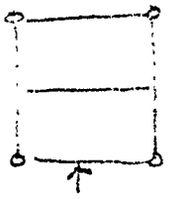

$A = 30.9\ in^2$ $S_x = 202\ in^3$ $S_y = 42.3\ in^3$ $r = 2.84$

$\frac{KL}{r}$ in the member y axis = 1.0 x 30' x 12"/ 2.84 = 126

$\therefore F_a = 9.41$

$$\text{UNITY CK} = \frac{\frac{P}{A}}{F_a} + \frac{\frac{M_Y}{S_y}}{F_b} + \frac{\frac{M_x}{S_x}}{F_b} = \frac{\frac{63.45}{30.9}}{9.41} + \frac{\frac{560.22}{42.3}}{22} + \frac{\frac{347.99}{202}}{22}$$

$$= 0.218 + 0.60 + 0.08 = 0.8985 < 1.0$$

$\therefore$ ok.

USE W18x105 for all SPANDREL BEAMS AT THE EQUIPMENT DECK.

NOTE: WE CAN RELOCATE STAIRWAYS TO THE SUPERSTRUCTURE LEGS TO AVOID HEAVY BEAMS.

GROUP H33.
MEMBER 17-16

LOADS; $P = 25.44^k$ $M_Y = 442.61^k$ $M_Z = 1847.28^k$
UNITY CHECK = 1.75
SIZE = 14" ϕ x 0.375
TRY 14" ϕ x 0.500 $A_x = 21.200$ $S = 69.126$ $r = 4.78$
LENGTH = 27.5'

$$\frac{kl}{r} = \frac{1.0 \times 27.5 \times 12}{4.78} = 69.0 \quad \therefore F_a = 16.53 \text{ ksi}$$

$$\text{UNITY CHECK} = \frac{\frac{25.44^k}{21.200 \text{ in}^2}}{16.53 \text{ ksi}} + \frac{\frac{442.61}{69.126}}{22} + \frac{\frac{1847.28}{69.126}}{22}$$

$$= 0.073 + 0.29 + 1.2 = 1.58 > 1.33$$

TRY 16" ϕ x 0.500 A = 24.347 S = 91.516 r = 5.5

$$\frac{kl}{r} = \frac{1.0 \times 27.5 \times 12}{5.5} = 60 \quad \therefore F_a = 17.43$$

$$\text{UNITY CHECK} = \frac{\frac{25.44^k}{24.347 \text{ in}^2}}{17.43 \text{ ksi}} + \frac{\frac{442.61}{91.516}}{22} + \frac{\frac{1847.28}{91.516}}{22}$$

$$= 0.06 + 0.22 + 0.92 = 1.20 < 1.33 \quad \therefore \text{o.k.}$$

USE 16" ϕ x 0.500' for all HORIZ. BRACING AT ELEV. +45.

GROUP JL1

THE JACKET LEGS HAVE 41" ϕ x 1.00" JOINT CANS WHICH WERE NOT CONSIDERED IN THE STRAW RUN FOR SAKE OF SIMPLICITY.

MEMBERS 25-21 & 23-19 ARE 41" ϕ x 1.00" for their entire length

w/A = 125.000 S = 1226.754 r = 14.15

Max forces in mbr 23-19

$F_x = 1297$ $M_Y = 12,416$, $M_Z = 592.98$

LENGTH = 4.54'

$\therefore KL/r = 1.0 \times 4.54 \times 12 / 14.15 = 4$

& $F_a = 21.44$

$$\text{UNITY CHECK} = \frac{\frac{1297^k}{125.000^{in^2}}}{21.44} + \frac{\frac{12416}{1226.754}}{22} + \frac{\frac{592.98}{1226.754}}{22}$$

$$\text{U.C.} = 0.48 + 0.46 + 0.22 = 1.16 < 1.33 \therefore \text{o.k.}$$

MEMBER 26-23

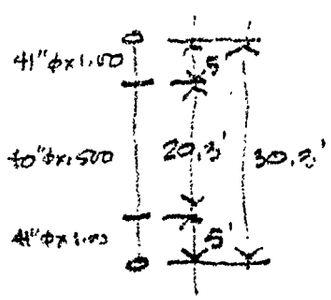

$F_x = 1301.3^k$ $M_Y = 9607.22^{ik}$ $M_Z = 509.57^{ik}$

shear at ends = $F_y = 1.67^k$ $F_z = 43.91^k$

$\therefore$ Mom 5' from top: $M_Y = 9607.2 - 5' \times 43.91^k \times 12 = 7032.6$

$M_Z = 509.57^{ik} - 5 \times 1.67^k \times 12 = 409.37$

41"ϕx1.00 in joint cans are used at each end of the member, from above it can be seen they will be ok, $\therefore$ check stress in portion of member that is 40" ϕ x 0.50

$w/A_x = 62.046$ S = 607.53 r = 13.908

$KL/r = 20.3' \times 12 / 13.908 = 17.4$ $F_a = 20.78$

$$\text{Unity check} = \frac{\frac{1301.3}{62.046}}{20.78} + \frac{\frac{7032.6}{605.3}}{22} + \frac{\frac{409}{605.3}}{22} = 1.57 > 1.33$$

USE 41" ϕ x 1.00" FOR ENTIRE LENGTH OF MBR.

12.5 FINAL STRUCTURE CONFIGURATION

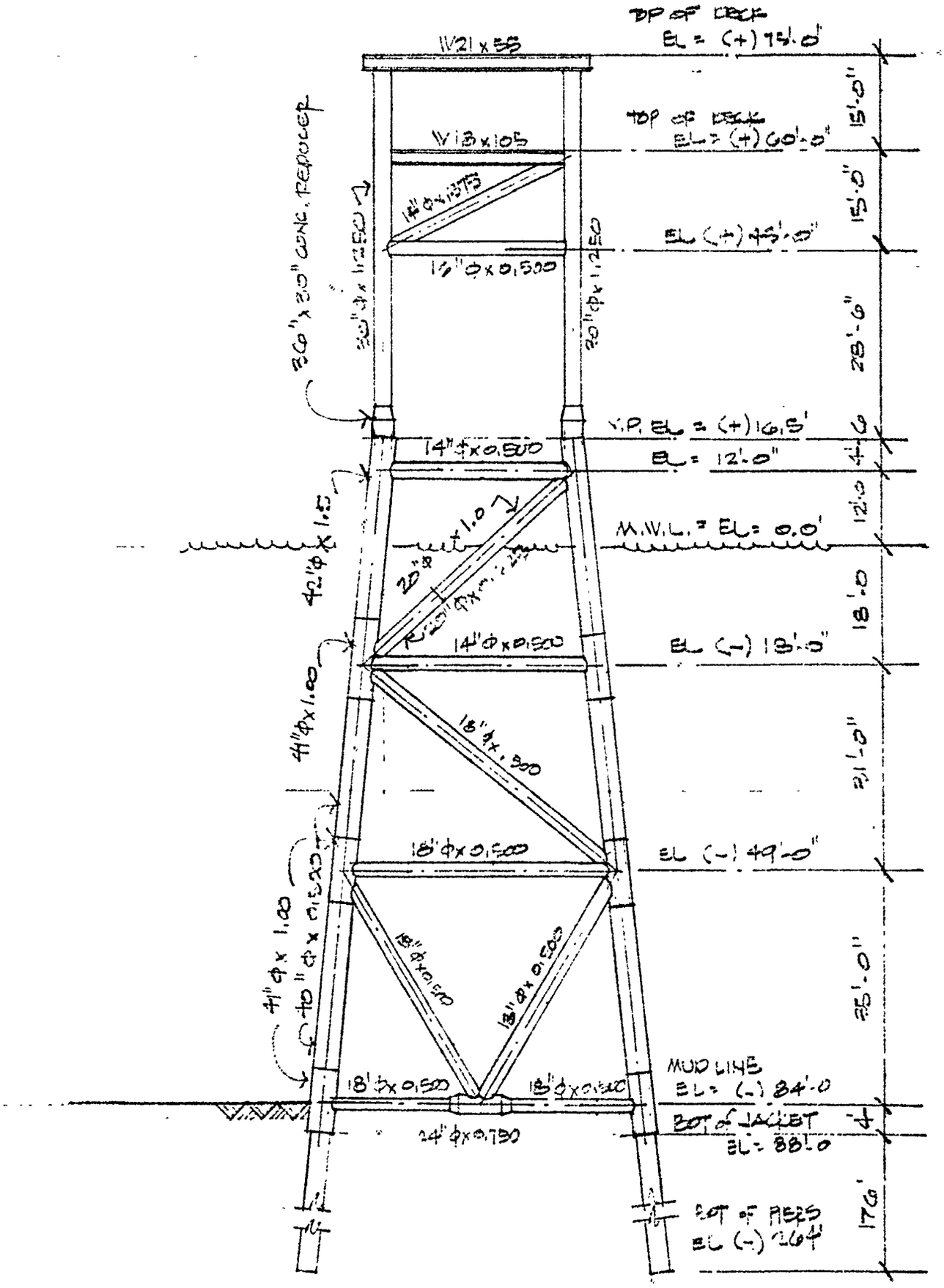

SECTION 13

CORROSION PROTECTION AND STRUCTURAL STEEL WEIGHT

13.1 INTRODUCTION

In order to determine prices for the four-pile structure, area and weight take-offs are made. Section 13.2 shows areas to consider for painting and corrosion protection.

Section 13.3 is a copy of the SEALOAD report which shows member lengths. These lengths are used in the tables of Section 13.4. Each table gives the weight and area of different sections of the structure. Section 13.5 gives the totals of all the areas and weights.

13.2 AREAS TO CONSIDER

A. FOR PAINTING

FROM NAVY SPECIFICATIONS, PAINTING IS REQUIRED FROM -4 BELOW MEAN WATER LEVEL TO THE TOP OF THE DECKS

B. CATHODIC PROTECTION

1. FROM API RP2A CATHODIC PROTECTION IS REQ'D BELOW THE SPLASH ZONE WHICH IS 4 FT. BELOW LOW WATER TIDE.

MEAN WATER LEVEL = 34'-0"
LOW WATER TIDE = 0'-0"
-4' = -4'-0"
EL. TOP OF CATHODIC PROTECTION = 30'-0"

2. CURRENT REQUIREMENTS for CATHODIC PROTECTION

CURRENT DENSITY = 60 mA/ft² of SURFACE AREA IN WATER
1 mA/ft² of SURFACE AREA IN MUD ZONE

5. DESIGN LIFE

N = 10 YEARS

CREST OFFSHORE, INC.

By [illegible] Client U.S. NAVY Subject STRUCTURAL CONCEPT ANALYSIS

Date 5-4-78 Job No. 21-221-92 Calculation LEN [illegible] Sheet 13.03 of [illegible]

13.3 MEMBER LENGTHS

257	JOINT	77	27.05	-27.05	0					WISHB-84	
258	JOINT	78	25.05	-25.05	0.01					WISHB-84	
259	JOINT	79	-27.05	-27.05	0					WISHB-84	
260	JOINT	80	-25.05	-25.05	0.01					WISHB-84	
261	JOINT	81	-27.05	27.05	0					WISHB-84	
262	JOINT	82	-25.05	25.05	0.01					WISHB-84	
263	JOINT	103	25.88	25.88	-8.26				111	SUPPORT3	
264	JOINT	104	25.88	-25.88	-8.26				111	SUPPORT4	
265	JOINT	102	-25.88	-25.88	-8.26				111	SUPPORT2	
266	JOINT	101	-25.88	25.88	-8.26				111	SUPPORT1	
267	LOAD		MEMBER			MEMBER					
268	LOADCN	1	JOINT NO.			LENGTHS					
269	LOAD Z	5	4	0.00	-.055	30.00	-.055			GLOB UNIF	DL 0 1
270	LOAD Z	6	3	0.00	-.040	30.00	-.040			GLOB UNIF	DL 0 1
271	LOAD Z	7	2	0.00	-.040	30.00	-.040			GLOB UNIF	DL 0 1
272	LOAD Z	8	1	0.00	-.055	30.00	-.055			GLOB UNIF	DL 0 1
273	LOAD Z	5	6	0.00	-.055	10.00	-.055			GLOB UNIF	DL 0 1
274	LOAD Z	6	7	0.00	-.055	10.00	-.055			GLOB UNIF	DL 0 1
275	LOAD Z	7	8	0.00	-.055	10.00	-.055			GLOB UNIF	DL 0 1
276	LOAD Z	4	3	0.00	-.055	10.00	-.055			GLOB UNIF	DL 0 1
277	LOAD Z	3	2	0.00	-.055	10.00	-.055			GLOB UNIF	DL 0 1
278	LOAD Z	2	1	0.00	-.055	10.00	-.055			GLOB UNIF	DL 0 1
279	LOAD Z	12	5	0.00	-.347	15.00	-.347			GLOB UNIF	DL 0 1
280	LOAD Z	11	4	0.00	-.347	15.00	-.347			GLOB UNIF	DL 0 1
281	LOAD Z	14	8	0.00	-.347	15.00	-.347			GLOB UNIF	DL 0 1
282	LOAD Z	9	1	0.00	-.347	15.00	-.347			GLOB UNIF	DL 0 1
283	LOAD Z	12	11	1.50	-.055	27.00	-.055			GLOB UNIF	DL 0 1
284	LOAD Z	13	10	1.50	-.055	27.00	-.055			GLOB UNIF	DL 0 1
285	LOAD Z	14	9	1.50	-.055	27.00	-.055			GLOB UNIF	DL 0 1
286	LOAD Z	12	13	1.50	-.055	12.00	-.055			GLOB UNIF	DL 0 1
287	LOAD Z	13	14	1.50	-.055	12.00	-.055			GLOB UNIF	DL 0 1
288	LOAD Z	11	10	1.50	-.055	12.00	-.055			GLOB UNIF	DL 0 1
289	LOAD Z	10	9	1.50	-.055	12.00	-.055			GLOB UNIF	DL 0 1
290	LOAD Z	17	12	0.00	-.347	14.00	-.347			GLOB UNIF	DL 0 1
291	LOAD Z	16	11	0.00	-.347	14.00	-.347			GLOB UNIF	DL 0 1
292	LOAD Z	18	14	0.00	-.347	14.00	-.347			GLOB UNIF	DL 0 1
293	LOAD Z	15	9	0.00	-.347	14.00	-.347			GLOB UNIF	DL 0 1
294	LOAD Z	17	11 26	1.25	-.055	30.61	-.055			GLOB UNIF	DL 0 1
295	LOAD Z	18	9 27	1.25	-.055	30.61	-.055	DISCO		GLOB UNIF	DL 0 1
296	LOAD Z	17	14 29	1.25	-.055	30.61	-.055	EL 46 bot		GLOB UNIF	DL 0 1
297	LOAD Z	16	9 31	1.25	-.055	30.61	-.055			GLOB UNIF	DL 0 1
298	LOAD Z	17	16 30	1.25	-.055	27.50	-.055			GLOB UNIF	DL 0 1
299	LOAD Z	18	15 51	1.25	-.055	27.50	-.055	HCP		GLOB UNIF	DL 0 1
300	LOAD Z	17	18 32	1.25	-.055	27.50	-.055			GLOB UNIF	DL 0 1
301	LOAD Z	16	15 33	1.25	-.055	27.50	-.055	EL + 46		GLOB UNIF	DL 0 1
302	LOAD Z	21	17	0.00	-.302	23.00	-.302	HBS		GLOB UNIF	DL 0 1
303	LOAD Z	21	17	23.00	-.347	6.50	-.347			GLOB UNIF	DL 0 1
304	LOAD Z	20	16	0.00	-.302	23.00	-.302			GLOB UNIF	DL 0 1
305	LOAD Z	20	16	23.00	-.347	6.50	-.347			GLOB UNIF	DL 0 1
306	LOAD Z	22	18	0.00	-.302	23.00	-.302			GLOB UNIF	DL 0 1
307	LOAD Z	22	18	23.00	-.347	6.50	-.347			GLOB UNIF	DL 0 1
308	LOAD Z	19	15	0.00	-.302	23.00	-.302			GLOB UNIF	DL 0 1
309	LOAD Z	19	15	23.00	-.347	6.50	-.347			GLOB UNIF	DL 0 1
310	LOAD Z	25	21	0.00	-.183	4.54	-.183			GLOB UNIF	DL 0 1
311	LOAD Z	24	20	0.00	-.183	4.54	-.183			GLOB UNIF	DL 0 1
312	LOAD Z	26	22	0.00	-.183	4.54	-.183			GLOB UNIF	DL 0 1

CREST OFFSHORE, INC.

By [illegible] Client [illegible] Subject [illegible] Sheet [illegible] of [illegible]
Date [illegible] Job No. [illegible] Calculation [illegible]

313	LOAD Z	23	19		0.00	-.183	4.54	-.183		GLOB	UNIF	DL	0 1
314	LOAD Z	25	24	42	1.50	-.063	27.90	-.063	HOR.	GLOB	UNIF	DL	0 1
315	LOAD Z	26	23	43	1.50	-.063	27.90	-.063		GLOB	UNIF	DL	0 1
316	LOAD Z	25	26	44	1.50	-.063	27.90	-.063	ELEV. +12.	GLOB	UNIF	DL	0 1
317	LOAD Z	24	23	45	1.50	-.063	27.90	-.063	HBI-14"Φ×.5	GLOB	UNIF	DL	0 1
318	LOAD Z	25	27	46	1.00	-.072	19.85	-.072		GLOB	UNIF	DL	0 1
319	LOAD Z	27	23	47	1.00	-.072	19.85	-.072	X-BRACE	GLOB	UNIF	DL	0 1
320	LOAD Z	26	27	48	1.00	-.072	19.85	-.072	+12	GLOB	UNIF	DL	0 1
321	LOAD Z	27	24	49	1.00	-.072	19.85	-.072	DB2 -18"	GLOB	UNIF	DL	0 1
322	LOAD Z	30	25		0.00	-.183	30.30	-.183	XB1-16"Φ×.5	GLOB	UNIF	DL	0 1
323	LOAD Z	29	24		0.00	-.183	30.30	-.183		GLOB	UNIF	DL	0 1
324	LOAD Z	31	26		0.00	-.183	30.30	-.183		GLOB	UNIF	DL	0 1
325	LOAD Z	28	23		0.00	-.183	30.30	-.183		GLOB	UNIF	DL	0 1
326	LOAD Z	29	25	54	1.50	-.112	42.37	-.112		GLOB	UNIF	DL	0 1
327	LOAD Z	28	26	55	1.50	-.112	42.37	-.112	MAG. bla.	GLOB	UNIF	DL	0 1
328	LOAD Z	31	25	56	1.50	-.112	42.37	-.112	+12 to -18	GLOB	UNIF	DL	0 1
329	LOAD Z	28	24	57	1.50	-.112	42.37	-.112		GLOB	UNIF	DL	0 1
330	LOAD Z	30	29	58	1.50	-.063	33.90	-.063	DB1 -20"Φ×.5	GLOB	UNIF	DL	0 1
331	LOAD Z	31	28	59	1.50	-.063	33.90	-.063	HB1 -12	GLOB	UNIF	DL	0 1
332	LOAD Z	30	31	60	1.50	-.063	33.90	-.063	HB1-14"Φ×.500	GLOB	UNIF	DL	0 1
333	LOAD Z	29	26	61	1.50	-.063	33.90	-.063		GLOB	UNIF	DL	0 1
334	LOAD Z	35	32	62	1.15	-.081	23.79	-.081	X-BRACE	GLOB	UNIF	DL	0 1
335	LOAD Z	32	28	63	1.15	-.081	23.79	-.081	-18	GLOB	UNIF	DL	0 1
336	LOAD Z	31	32	64	1.15	-.081	23.79	-.081		GLOB	UNIF	DL	0 1
337	LOAD Z	32	29	65	1.15	-.081	23.79	-.081	XB2 -18"Φ×.5	GLOB	UNIF	DL	0 1
338	LOAD Z	35	30		0.00	-.183	31.31	-.183		GLOB	UNIF	DL	0 1
339	LOAD Z	38	29		0.00	-.183	31.31	-.183		GLOB	UNIF	DL	0 1
340	LOAD Z	36	31		0.00	-.183	31.31	-.183		GLOB	UNIF	DL	0 1
341	LOAD Z	33	28		0.00	-.183	31.31	-.183		GLOB	UNIF	DL	0 1
342	LOAD Z	35	29	70	1.50	-.081	47.70	-.081	DB2 -18"Φ×.5	GLOB	UNIF	DL	0 1
343	LOAD Z	36	28	71	1.50	-.081	47.70	-.081	DIA.	GLOB	UNIF	DL	0 1
344	LOAD Z	35	31	72	1.50	-.081	47.70	-.081	-18 to -49	GLOB	UNIF	DL	0 1
345	LOAD Z	34	28	73	1.50	-.081	47.70	-.081		GLOB	UNIF	DL	0 1
346	LOAD Z	35	34	74	1.50	-.081	40.10	-.081		GLOB	UNIF	DL	0 1
347	LOAD Z	36	33	75	1.50	-.081	40.10	-.081	HOR. -49	GLOB	UNIF	DL	0 1
348	LOAD Z	35	36	76	1.50	-.081	40.10	-.081	HB2-18"Φ×.5	GLOB	UNIF	DL	0 1
349	LOAD Z	34	33	77	1.50	-.081	40.10	-.081		GLOB	UNIF	DL	0 1
350	LOAD Z	35	37	78	1.25	-.091	27.98	-.091	X-BRACE	GLOB	UNIF	DL	0 1
351	LOAD Z	37	33	79	1.25	-.091	27.98	-.091	-49	GLOB	UNIF	DL	0 1
352	LOAD Z	36	37	80	1.25	-.091	27.98	-.091	XB2	GLOB	UNIF	DL	0 1
353	LOAD Z	37	34	81	1.25	-.091	27.98	-.091	20"Φ×.5	GLOB	UNIF	DL	0 1
354	LOAD Z	42	35		0.00	-.183	35.35	-.183		GLOB	UNIF	DL	0 1
355	LOAD Z	47	34		0.00	-.183	35.35	-.183		GLOB	UNIF	DL	0 1
356	LOAD Z	44	36		0.00	-.183	35.35	-.183		GLOB	UNIF	DL	0 1
357	LOAD Z	38	33		0.00	-.183	35.35	-.183		GLOB	UNIF	DL	0 1
358	LOAD Z	35	41	86	1.50	-.081	38.25	-.081		GLOB	UNIF	DL	0 1
359	LOAD Z	41	34	87	1.50	-.081	38.25	-.081	DIA.	GLOB	UNIF	DL	0 1
360	LOAD Z	36	45	88	1.50	-.081	38.25	-.081	-49 to -84	GLOB	UNIF	DL	0 1
361	LOAD Z	45	33	89	1.50	-.081	38.25	-.081		GLOB	UNIF	DL	0 1
362	LOAD Z	35	43	90	1.50	-.081	38.25	-.081	DB2	GLOB	UNIF	DL	0 1
363	LOAD Z	43	36	91	1.50	-.081	38.25	-.081	18"Φ×.5	GLOB	UNIF	DL	0 1
364	LOAD Z	34	39	92	1.50	-.081	38.25	-.081		GLOB	UNIF	DL	0 1
365	LOAD Z	39	33	93	1.50	-.081	38.25	-.081		GLOB	UNIF	DL	0 1
366	LOAD Z	42	41	94	1.50	-.081	22.05	-.081	HOR. -84	GLOB	UNIF	DL	0 1
367	LOAD Z	41	40	95	1.50	-.081	22.05	-.081	HB2	GLOB	UNIF	DL	0 1
368	LOAD Z	44	45	96	1.50	-.081	22.05	-.081	18"Φ×.5	GLOB	UNIF	DL	0 1

CREST OFFSHORE, INC.

By [illegible] Client [illegible] Subject [illegible]

Date [illegible] Job No. [illegible] Calculation [illegible]

Sheet 13/25 of [illegible]

369	LOAD Z	45	38	99	1.50	-.081	22.05	-.081		GLOB	UNIF	DL	0 1
370	LOAD Z	42	43	98	1.50	-.081	22.05	-.081		GLOB	UNIF	DL	0 1
371	LOAD Z	43	44	99	1.50	-.081	22.05	-.081		GLOB	UNIF	DL	0 1
372	LOAD Z	40	39	100	1.50	-.081	22.05	-.081		GLOB	UNIF	DL	0 1
373	LOAD Z	39	38	101	1.50	-.081	22.05	-.081		GLOB	UNIF	DL	0 1
374	LOAD Z	42	46	102	1.25	-.091	32.93	-.091		GLOB	UNIF	DL	0 1
375	LOAD Z	46	38	103	1.25	-.091	32.93	-.091		GLOB	UNIF	DL	0 1
376	LOAD Z	44	46	104	1.25	-.091	32.93	-.091		GLOB	UNIF	DL	0 1
377	LOAD Z	46	40	105	1.25	-.091	32.93	-.091		GLOB	UNIF	DL	0 1
378	LOAD Z	25	55		0.00	-.148	2.83	-.148		GLOB	UNIF	DL	0 1
379	LOAD Z	55	56		0.00	-.148	2.83	-.148		GLOB	UNIF	DL	0 1
380	LOAD Z	24	53		0.00	-.148	2.83	-.148		GLOB	UNIF	DL	0 1
381	LOAD Z	53	54		0.00	-.148	2.83	-.148		GLOB	UNIF	DL	0 1
382	LOAD Z	26	57		0.00	-.148	2.83	-.148		GLOB	UNIF	DL	0 1
383	LOAD Z	57	58		0.00	-.148	2.83	-.148		GLOB	UNIF	DL	0 1
384	LOAD Z	23	51		0.00	-.148	2.83	-.148		GLOB	UNIF	DL	0 1
385	LOAD Z	51	52		0.00	-.148	2.83	-.148		GLOB	UNIF	DL	0 1
386	LOAD Z	30	63		0.00	-.148	2.83	-.148		GLOB	UNIF	DL	0 1
387	LOAD Z	63	64		0.00	-.148	2.83	-.148		GLOB	UNIF	DL	0 1
388	LOAD Z	29	61		0.00	-.148	2.83	-.148		GLOB	UNIF	DL	0 1
389	LOAD Z	61	62		0.00	-.148	2.83	-.148		GLOB	UNIF	DL	0 1
390	LOAD Z	31	65		0.00	-.148	2.83	-.148		GLOB	UNIF	DL	0 1
391	LOAD Z	65	66		0.00	-.148	2.83	-.148		GLOB	UNIF	DL	0 1
392	LOAD Z	28	59		0.00	-.148	2.83	-.148		GLOB	UNIF	DL	0 1
393	LOAD Z	59	60		0.00	-.148	2.83	-.148		GLOB	UNIF	DL	0 1
394	LOAD Z	35	71		0.00	-.148	2.83	-.148		GLOB	UNIF	DL	0 1
395	LOAD Z	71	72		0.00	-.148	2.83	-.148		GLOB	UNIF	DL	0 1
396	LOAD Z	34	69		0.00	-.148	2.83	-.148		GLOB	UNIF	DL	0 1
397	LOAD Z	69	70		0.00	-.148	2.83	-.148		GLOB	UNIF	DL	0 1
398	LOAD Z	36	73		0.00	-.148	2.83	-.148		GLOB	UNIF	DL	0 1
399	LOAD Z	73	74		0.00	-.148	2.83	-.148		GLOB	UNIF	DL	0 1
400	LOAD Z	33	67		0.00	-.148	2.83	-.148		GLOB	UNIF	DL	0 1
401	LOAD Z	67	68		0.00	-.148	2.83	-.148		GLOB	UNIF	DL	0 1
402	LOAD Z	42	79		0.00	-.148	2.83	-.148		GLOB	UNIF	DL	0 1
403	LOAD Z	79	80		0.00	-.148	2.83	-.148		GLOB	UNIF	DL	0 1
404	LOAD Z	40	77		0.00	-.148	2.83	-.148		GLOB	UNIF	DL	0 1
405	LOAD Z	77	78		0.00	-.148	2.83	-.148		GLOB	UNIF	DL	0 1
406	LOAD Z	44	81		0.00	-.148	2.83	-.148		GLOB	UNIF	DL	0 1
407	LOAD Z	81	82		0.00	-.148	2.83	-.148		GLOB	UNIF	DL	0 1
408	LOAD Z	38	75		0.00	-.148	2.83	-.148		GLOB	UNIF	DL	0 1
409	LOAD Z	75	76		0.00	-.148	2.83	-.148		GLOB	UNIF	DL	0 1
410	LOAD Z	21	56		0.00	-.403	4.53	-.403		GLOB	UNIF	DL	0 1
411	LOAD Z	56	64		0.00	-.403	30.30	-.403		GLOB	UNIF	DL	0 1
412	LOAD Z	64	72		0.00	-.403	31.31	-.403		GLOB	UNIF	DL	0 1
413	LOAD Z	72	80		0.00	-.481	35.35	-.481		GLOB	UNIF	DL	0 1
414	LOAD Z	20	54		0.00	-.403	4.53	-.403		GLOB	UNIF	DL	0 1
415	LOAD Z	54	62		0.00	-.403	30.30	-.403		GLOB	UNIF	DL	0 1
416	LOAD Z	62	70		0.00	-.403	31.31	-.403		GLOB	UNIF	DL	0 1
417	LOAD Z	70	78		0.00	-.481	35.35	-.481		GLOB	UNIF	DL	0 1
418	LOAD Z	22	58		0.00	-.403	4.53	-.403		GLOB	UNIF	DL	0 1
419	LOAD Z	58	66		0.00	-.403	30.30	-.403		GLOB	UNIF	DL	0 1
420	LOAD Z	66	74		0.00	-.403	31.31	-.403		GLOB	UNIF	DL	0 1
421	LOAD Z	74	82		0.00	-.481	35.35	-.481		GLOB	UNIF	DL	0 1
422	LOAD Z	19	52		0.00	-.403	4.53	-.403		GLOB	UNIF	DL	0 1
423	LOAD Z	52	60		0.00	-.403	30.30	-.403		GLOB	UNIF	DL	0 1
424	LOAD Z	60	68		0.00	-.403	31.31	-.403		GLOB	UNIF	DL	0 1

CREST OFFSHORE, INC.

By [illegible] Client [illegible] Subject [illegible] Sheet [illegible] of [illegible]

Date [illegible] Job No. [illegible] Calculation [illegible]

425	LOAD Z	68	76	0.00	-.481	35.35	-.481			GLOB	UNIF	DL 0 1
426	LOAD Z	80	102	0.00	-.481	15.16	-.481			GLOB	UNIF	DL 0 1
427	LOAD Z	78	104	0.00	-.481	15.16	-.481			GLOB	UNIF	DL 0 1
428	LOAD Z	82	101	0.00	-.481	15.16	-.481			GLOB	UNIF	DL 0 1
429	LOAD Z	76	103	0.00	-.481	15.16	-.481			GLOB	UNIF	DL 0 1
430	LOADCN	1										
431	LOAD X	21	56	0.00	115					GLOB	CONC	WN 1 1
432	LOAD Y	21	56					0.00	105503	GLOB	MOMT	WN 1 1
433	LOAD Y	21	56	0.00	115					GLOB	CONC	WN 1 1
434	LOAD X	21	56					0.00	-105503	GLOB	MOMT	WN 1 1
435	LOAD X	20	54	0.00	115					GLOB	CONC	WN 1 1
436	LOAD Y	20	54					0.00	105503	GLOB	MOMT	WN 1 1
437	LOAD Y	20	54	0.00	115					GLOB	CONC	WN 1 1
438	LOAD X	20	54					0.00	-105503	GLOB	MOMT	WN 1 1
439	LOAD X	22	58	0.00	115					GLOB	CONC	WN 1 1
440	LOAD Y	22	58					0.00	105503	GLOB	MOMT	WN 1 1
441	LOAD Y	22	58	0.00	115					GLOB	CONC	WN 1 1
442	LOAD X	22	58					0.00	-105503	GLOB	MOMT	WN 1 1
443	LOAD X	19	52	0.00	115					GLOB	CONC	WN 1 1
444	LOAD Y	19	52					0.00	105503	GLOB	MOMT	WN 1 1
445	LOAD Y	19	52	0.00	115					GLOB	CONC	WN 1 1
446	LOAD X	19	52					0.00	-105503	GLOB	MOMT	WN 1 1
447	LOAD X	21	56	0.00	431					GLOB	CONC	WN 2 1
448	LOAD Y	21	56					0.00	349092	GLOB	MOMT	WN 2 1
449	LOAD Y	21	56	0.00	431					GLOB	CONC	WN 2 1
450	LOAD X	21	56					0.00	-349092	GLOB	MOMT	WN 2 1
451	LOAD X	20	54	0.00	431					GLOB	CONC	WN 2 1
452	LOAD Y	20	54					0.00	349092	GLOB	MOMT	WN 2 1
453	LOAD Y	20	54	0.00	431					GLOB	CONC	WN 2 1
454	LOAD X	20	54					0.00	-349092	GLOB	MOMT	WN 2 1
455	LOAD X	22	58	0.00	431					GLOB	CONC	WN 2 1
456	LOAD Y	22	58					0.00	349092	GLOB	MOMT	WN 2 1
457	LOAD Y	22	58	0.00	431					GLOB	CONC	WN 2 1
458	LOAD X	22	58					0.00	-349092	GLOB	MOMT	WN 2 1
459	LOAD X	19	52	0.00	431					GLOB	CONC	WN 2 1
460	LOAD Y	19	52					0.00	349092	GLOB	MOMT	WN 2 1
461	LOAD Y	19	52	0.00	431					GLOB	CONC	WN 2 1
462	LOAD X	19	52					0.00	-349092	GLOB	MOMT	WN 2 1
463	LOAD X	21	56	0.00	115					GLOB	CONC	WN 3 1
464	LOAD Y	21	56					0.00	105503	GLOB	MOMT	WN 3 1
465	LOAD Y	21	56	0.00	115					GLOB	CONC	WN 3 1
466	LOAD X	21	56					0.00	-105503	GLOB	MOMT	WN 3 1
467	LOAD X	20	54	0.00	115					GLOB	CONC	WN 3 1
468	LOAD Y	20	54					0.00	105503	GLOB	MOMT	WN 3 1
469	LOAD Y	20	54	0.00	115					GLOB	CONC	WN 3 1
470	LOAD X	20	54					0.00	-105503	GLOB	MOMT	WN 3 1
471	LOAD X	22	58	0.00	115					GLOB	CONC	WN 3 1
472	LOAD Y	22	58					0.00	105503	GLOB	MOMT	WN 3 1
473	LOAD Y	22	58	0.00	115					GLOB	CONC	WN 3 1
474	LOAD X	22	58					0.00	-105503	GLOB	MOMT	WN 3 1
475	LOAD X	19	52	0.00	115					GLOB	CONC	WN 3 1
476	LOAD Y	19	52					0.00	105503	GLOB	MOMT	WN 3 1
477	LOAD Y	19	52	0.00	115					GLOB	CONC	WN 3 1
478	LOAD X	19	52					0.00	-105503	GLOB	MOMT	WN 3 1
479	LOAD Y	21	56	0.00	431					GLOB	CONC	WN 4 1
480	LOAD Y	21	56					0.00	349092	GLOB	MOMT	WN 4 1

CREST OFFSHORE, INC.

Sheet B.07 of 4PILE

By [illegible] Client [illegible] Subject [illegible] CONCEPT ANALYSIS

Date 5.2.70 Job No. 27-771-92 Calculation WEIGHT TAKE-OFFS

13.4 AREA AND WEIGHT TAKE-OFFS

SEE SHT 5-4P10 PILINGS

for cathodic protection

MEC	SIZE	UNIT WT. K/'	UNIT LENGTH FT.	NO. AREAS	TOTAL WT. K	UNIT AREA □'/'	TOTAL SURFACE AREA □'
P-6	30"φ x 1.25	0.464	20'	1x4	37.12 K		
P-5 / P-4	30"φ x 1.75	0.640	50'	2x4	256.0	2/10 x 9.425	754 □'
P-3 / P-2	30"φ x 1.50	0.553	50'	2x4	221.2 K	9.425	3770 □'
P-1	30"φ x 1.50	0.553	60'	1x4	132.72 K	9.425	2262 □'
SPLICE POINT	33"φ x 0.625	0.210	3'	5x4	34.50 K		
PILING TOTALS					651.60 K 340.8 T		6786 □'

CREST OFFSHORE, INC.

By [illegible] Client [illegible] Subject [illegible]
Date 5-2-76 Job No. 22-771-92 Calculation WEIGHT TAKE-OFFS

PILING
EXCESS TO BE CUT OFF IN FIELD

MEM	SIZE	UNIT WT. #/	UNIT LENGTH FT	NO. MEMS.	TOTAL WT. K	UNIT AREA #/	TOTAL SURFACE #
P-6	36"φ x 1.75	0.464	10'	1x4	18.56K		
P-5 P-4	36"φ x 1.75	0.640	2'	2x4	10.24K		
P-3 P-2 P-1	36"φ x 1.50	0.553	2'	3x4	13.27K		
PILING EXCESS TOTALS					42.07K 21.0T		

CREST OFFSHORE, INC.

Sheet 13.09 of 1 PLE

By [illegible] Client [illegible] Subject [illegible]

Date 5-2-76 Job No. 22-111-94 Calculation WEIGHT TAKE-OFFS

JACKET

for cathodic protection

MBR	SIZE	UNIT WT. K/1	UNIT LENGTH FT	NO. REQD.	TOTAL WT. K	UNIT AREA #/1	TOTAL SURFACE AREA #
HB1 @ +12	4"φ x 0.500	0.072	27.90'	4	8.04 K		
XB1 -12	16"φ x 0.5	0.083	40.4	2	6.71 K		
LL1 +10.5 -23	41"φ x 1.00	0.4272	43.45	4	74.25 K	23/39.5 x 10.73	1080 #
BHT CAHS	41"φ x 1.00	0.4272	10.0	2x4	34.18 K	10.73	429 #
LL1	40"φ x 0.500	0.211	51.5	4	43.47	10.472	2157 #
DB1 -12 -18	20"φ x 0.625	0.1248	42.37	4	21.91 K	5.230	887.4 #
HB1 -18	14"φ x 0.500	0.072	33.70	4	9.72 K	3.665	497.0 #
XB2 -18	18"φ x 0.500	0.0935	48.9	2	9.14 K	4.712	460.8 #
DB2 -18 -49	18"φ x 0.500	0.0935	47.7	4	17.84 K	4.712	899.0 #
HB2 -49	18"φ x 0.500	0.0935	40.1	4	15.0 K	4.712	755.8 #
XB3 -49	20"φ x 0.500	0.104	57.6	2	11.98 K	5.230	603.2 #
DB2 -49 -24	18"φ x 0.500	0.0935	33.25	8	28.61	4.712	1441.9 #
HB2 -54	18"φ x 0.500	0.0935	22.05	8	16.49 K	4.712	831.2 #
XB3 -54	20"φ x 0.500	0.104	67.6	2	14.00 K	5.230	707.9 #
BHT CAH	24"φ x 0.750	0.1363	5.0	4	2.724 K	6.283	125.7 #
JACKET TOTALS					315.16 K 158 T	Quote;	10832 #

CREST OFFSHORE, INC.

Sheet 15.10 of 4 PSE

By [illegible] Client [illegible] Subject STRUCTURAL CONCEPT ANALYSIS

Date 5-3-76 Job No. 57-111-92 Calculation WEIGHT TAKE-OFFS

JACKET WALKWAY

Areas for Painting

REF	SIZE	UNIT WT. K/ft	UNIT LENGTH ft	NO. REQ.	TOTAL WT. K	UNIT AREA ft²/ft	TOTAL AREA ft²
	8 5/8"φ x 0.438	0.0385	25'	4	4.5 K	2.258	203 ft²
	3 1/2"φ x 0.216	0.008	4'	8x4	1.0 K	0.753	96 ft²
	1/4" PLT ft	0.0102	4'x30' + 7'x22'	2	4.2 K	A x 2	832 ft²
	JACKET WALKWAY TOTALS				8.8 K / 4.4 T		
	JACKET TOTAL = 4 + 10 - AREAS for PAINTING						
HBI C 12	14"φ x 0.500	—	27.90	4	—	4.189	467 ft²
XBI 4-12	1/2"φ x 0.375	—	40.4'	2	—	5.605	296
	41"φ x 1.00	—	43.45	4	—	6.5/37.5 x 10.75	779 ft²
JACKET WALKWAY TOTALS					9.3 K 4.4 T	for painting	2673 ft²

CREST OFFSHORE, INC.

Sheet 13 of 14 PLS

By [illegible] Client [illegible] Subject [illegible]

Date 5-2-79 Job No. 22-171-92 Calculation WEIGHT TAKE-OFFS

BOAT LANDING

MBR	SIZE	UNIT WT. K/'	UNIT LENGTH FT.	NO. REQD.	TOTAL WT. K	UNIT AREA ⊡/'	TOTAL SURFACE AREA ⊡
HOR.	3 5/8"φ x 0.500	0.0[illegible]	15'	1	0.65 K	2.258	34 ⊡
HOR.	3 5/8"φ x 0.500	0.0[illegible]	30'	4	5.21 K	2.258	271
HOR.	12 3/4"φ x 0.333	0.1073	3'	4	0.80 K	3.34	27
VERT.	12 3/4"φ x 0.333	0.1073	16'	2	3.43 K	3.34	107
VERT.	6 5/8"φ x 0.432	0.0250	13'	4	1.40 K	1.734	90
VERT.	6 5/8"φ x 0.432	0.0250	10'	5	1.43 K	1.734	87
DIAG.	6 5/8"φ x 0.432	0.0250	13'	2	0.80 K	1.734	52
STUBS	6 5/8"φ x 0.432	0.0250	4'	14	1.60 K	1.734	97
DIAG. STUBS	6 5/8"φ x 0.432	0.0250	5.7'	12	1.76 K	1.734	119
	14" CHF'D ⊡	0.0102	4' x 24'	1	0.98 K	2	192
BOAT LANDING TOTALS					13.47 K 1.34 T	total anode painting	1276 ⊡ 466 # 610 ⊡

CREST OFFSHORE, INC.

Sheet B12 of 4 PIES

By JAA Client U.S. NAVY Subject STRUCTURAL CONCEPT ANALYSIS

Date 5-2-76 Job No. 22-11-92 Calculation WEIGHT TAKE-OFFS

SUPER STRUCTURE

MFC	SIZE	UNIT WT. K/1	UNIT LENGTH FT.	NO. MFCS.	TOTAL WT. K	UNIT AREA #/1	TOTAL SURFACE AREA #
W21	W21x55	0.055	30'	2	3.3K	0.52	31.2#
W17	W13x40	0.040	30'	2	2.4K	0.42	25.2#
W21	W21x55	0.055	30'	2	3.3K	0.52	31.2#
W13	W13x55	0.055	30'	1	1.65	0.46	13.8#
W18	W18x105	0.105	30'	4	12.60K	0.53	69.0#
DB3 +65 +45	14"φx0.375	0.055	30.61	4	6.73K	3.665	449.0#
HB3 +45	16"φx0.500	0.083	27.50	4	9.13	4.19	460.9#
XB1 +45	16"φx0.500	0.083	40.0	2	6.64K	4.19	335.2
SC	30"φx1.250	0.384	58.5'	4	89.86K	7.854	1837.8#
SPUD	27"φx0.625	0.170	5'	4	5.03K	7.07	226.2
Deck	1/4" checkered	0.015 #/#	35x35	1	18.4	A x 2	2450
Sub	1/4 chk. plate	0.015	15x30	1	6.75	A x 2	900
[illegible]	W10x11.5	0.0115	10'	33	3.8K	10x2+4x4 3.0	990
[illegible]	W10x11.5	0.0115	15	11	1.9K	3.0	495
SUPER STRUCTURE TOTALS					172.1 86T	[illegible]	8315#

CREST OFFSHORE, INC.

By [illegible] Client [illegible] Subject [illegible] CONCEPT ANALYSIS
Date 5-2-76 Job No. 32-371-92 Calculation WEIGHT TAKE-OFFS

STAIRWAY

ITEM	SIZE	UNIT WT. K/'	UNIT LENGTH FT	NO. REQD.	TOTAL WT. K	UNIT AREA #/'	TOTAL SURFACE AREA #
STRINGER	L 12x20.7	0.0207	89.2'	2	3.7K	3	535#
HOR. HANDRAIL	1.9"φx0.145	0.00272	89.2'	4	1.0K	0.5	178.4#
VERT HANDRAIL	1.9"φx0.145	0.00272	3.5'	47	0.4K	0.5	82.3#
TREADS	1"x3/16"x10 7/8" GRATING	0.00730	2.5'	70	1.3K	2.0	350#
HOE PL	1/4"x4" PL	0.001	89.2	2	0.2K	0.71	126.7#
LANDING	W6x15.5	0.0155	25'	5	1.94K	3	375#
LANDING	1"x3/8" GRATING	0.00723	5'x4.5'	5	1.32K	2	300#
LANDING BRACE	6 3/8"φx0.28	0.017	6.4	5	0.61K	1.73	61.8#
LANDING BRACE	4 1/2"φx0.237	0.0108	25'	5	1.35K	1.18	147.5#
STAIR BRACE	2x2x1/4" ∠	0.0232	3.3'	10x5	0.53K	0.7	115.5#
LANDING JOIST	5 1/2"φx0.30	0.0102	4.5'	3x5	0.7K	0.92	62.1#
LANDING HANDRAIL	1.9"φx0.145	0.00272	18	2x5	0.49K	0.5	90#
					13.54K		
	+15% MISCELLANEOUS			=	2.06		
STAIRWAY TOTALS					15.6K 7.8T	[illegible]	2484#

CREST OFFSHORE, INC.

Sheet 13 14 of [illegible]

By WWS Client U.S. NAVY Subject STRUCTURAL COMPONENT ANALYSIS

Date 5-13-16 Job No. 27-27-16 Calculation WT. TAKE OFFS

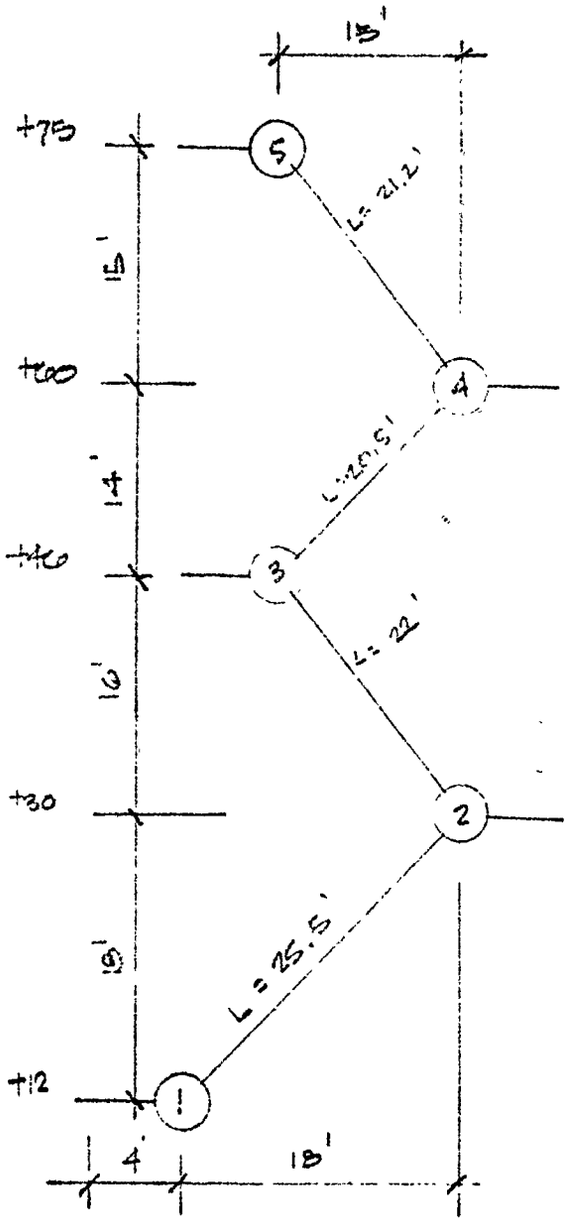

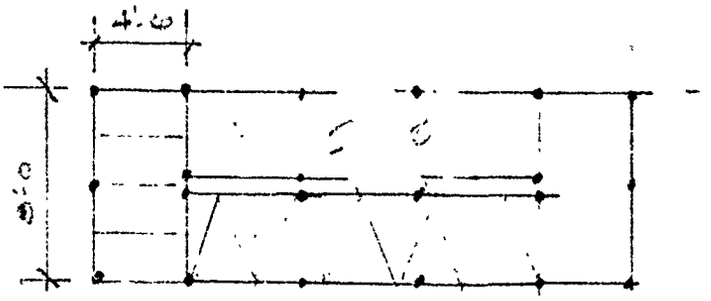

VERT HANDRAILS 8/STAIR x 4 STAIRS = 32
8/LAND x 5 = 15
47

TREADS @ 8" RISE

5-4	22.5	@ 8.18"	= 21 TREADS
4-3	21	@ 8	= 20 "
3-2	24	@ 8	= 23 "
2-1	27	@ 8	= 26
			70

CREST OFFSHORE, INC.

Sheet 13.15 of 4PGS

By [illegible] Client U.S. NAVY Subject STRUCTURAL CONCEPT ANALYSIS
Date 5-1-76 Job No. [illegible] Calculation AREA TAKE-OFFS

13.5 PAINTING AND ANODES
AREA TAKE-OFF DETAILS

A. AREAS ABOVE SPLASH ZONE TO BE PAINTED

JACKET WALKWAY		2073 ft²
SUPER-STRUCTURE	=	8315 ft²
BOATLANDING		610 ft²
TRAVEL	=	2,484 ft²
TOTAL AREA	=	14 087 ft²

B. AREAS BELOW SPLASH ZONE REQUIRING ANODES

PILING	=	6756 ft²	BELOW MUD LINE
JACKET	=	12,382 ft²	
BOAT LANDING	=	460 ft²	
TOTAL AREA	=	11,348 ft²	ABOVE MUDLINE

C. TOTAL CURRENT REQUIREMENTS

$I = 6\ \text{mamps/ft}^2 \times 11{,}348\ \text{ft}^2 + 2\ \text{mamp/ft}^2 \times 6756\ \text{ft}^2$

$= 81{,}660\ \text{mamps} = 81.66\ \text{amps}$

D. CAPACITY OF ALLOY

ALUMINUM - ZINC - MERCURY $C = 1250\ \frac{\text{amp-hrs}}{\text{lb}}$

E. TOTAL WT. OF ANODES REQ'D

$W_a = \frac{81.66\ \text{amps} \times 10{,}000\ \text{hrs/yr} \times 1\ \text{yr} \times 24\ \text{hrs/day}}{1250\ \text{amp-hrs/lb}}$

$= 5722.7\ \text{lbs}$

F. NO. OF ANODES REQ'D

$N = \frac{5722.7\ \text{lbs}}{325\ \text{lbs/anode}} = 17.61$ ea. 20 ANODES

13.6 WEIGHT TAKE-OFF DTALS

PILING	=	370.8 T
PILING EXCESS	=	21.0 T
JACKET	=	158.0 T
JACKET WALKWAY	=	4.4 T
BOAT LANDING	=	1.2 T
SUPER STRUCTURE	=	86.0 T
STAIRWAY	=	7.3 T
TOTAL WEIGHT	=	627.2 T

EXHIBIT A

Laterally Loaded Pile Capacity

```
J.ATKINSON 00442705 7345          LEC9011          SYSMSG
```

PILE PROGRAM.

GOOD RUN

60 SPANS @ 36" EA.

$\ell = 50'$

```
LL          EEEEEEEEEEEE    CCCCCCCCCCC     99999999999     0000000        11          11
LL          EEEEEEEEEEEE    CCCCCCCCCCCC    999999999999    000000000      111         111
LL          EE              CC        CC    99        99    00        00   1111        1111
LL          EE              CC        CC    99        99    00        00     11          11
LL          EE              CC              99        99    00        00     11          11
LL          EEEEEEEE        CC              999999999999    00        00     11          11
LL          EEEEEEEE        CC               99999999999    00        00     11          11
LL          EE              CC                       99    00        00     11          11
LL          EE              CC        CC             99    00        00     11          11
LL          EE              CC        CC             99    00        00     11          11
LLLLLLLLLLLL    EEEEEEEEEEEE    CCCCCCCCCCCC    999999999999    000000000     111111      111111
LLLLLLLLLLLL    EEEEEEEEEEEE    CCCCCCCCCCC     99999999999     0000000       111111      111111


            JJ      00000000000     AAAAAAAAAAAA                    7777777777777   33333333333         44      5555555 55555
            JJ      00000000000000  AAAAAAAAAAAAAA                  777777777777    3333333333333       444     5555555555555
            JJ      00        00    AA        AA                    77        77    33        33       4444    55
            JJ      00        00    AA        AA                        77                33        44 44   55
            JJ      00        00    AA        AA                      77                  33      44   44   55
            JJ      00        00    AAAAAAAAAAAA                    77                  333     44    44     555555555555
            JJ      00        00    AAAAAAAAAAAA                    77                  333     44    44     5555555555555
            JJ      00        00    AA        AA                  77                    33    444444444444           55
JJ          JJ      00        00    AA        AA                  77                    33    444444444444           55
JJ          JJ      00        00    AA        AA                  77          33        33        44     55       55
JJJJJJJJJJJJJJ      000000000000    AAAAAAAAAAAA                77          333333333333        44     5555555555555
 JJJJJJJJJJJJ       00000000000     AAAAAAAAAAAA                77           3333333333         44      55555555555


 SSSSSSSSSSS    YY          YY     SSSSSSSSSSS    MM          MM    SSSSSSSSSSS     GGGGGGGGGGG
SSSSSSSSSSSSS   YY          YY    SSSSSSSSSSSSS   MMM        MMM   SSSSSSSSSSSSS   GGGGGGGGGGGGG
SS          SS   YY        YY     SS         SS   MMMM      MMMM   SS         SS   GG         GG
SS               YY      YY       SS              MM MM    MM MM   SS              GG         GG
SS                YY    YY        SS              MM  MM  MM  MM   SS              GG
SSSSSSSSSSSS       YYYY            SSSSSSSSSSSS   MM   MMM    MM    SSSSSSSSSSSS    GG
SSSSSSSSSSSS        YY             SSSSSSSSSSSS   MM    M     MM    SSSSSSSSSSSS    GG       GGGG
            SS      YY                     SS     MM          MM                SS   GG       GGGGG
            SS      YY                     SS     MM          MM                SS   GG         GG
SS          SS      YY             SS      SS     MM          MM    SS          SS   GG         GG
SSSSSSSSSSSS        YY             SSSSSSSSSSSS   MM          MM    SSSSSSSSSSSS    GGGGGGGGGGGG
 SSSSSSSSSSS        YY              SSSSSSSSSSS   MM          MM     SSSSSSSSSSS     GGGGGGGGGGG


J.ATKINSON 00442705 7345          LEC9011          SYSMSG
```

```
TSV40 JOB ORIGIN FROM GROUP=RM027    , DSP=CR , DEVICE=RM027RD1, 0A3
//LEC9011 JOB (00442705002777100TLEC27011),'J.ATKINSON',PRTY=4,CLASS=A,C
// TIME=(005),REGION=256K
//*MAIN LINES=(005,*),CARDS=(00,C)
//JOBLIB  DD DSN=DCPROD.LIB03,DISP=SHR
//        EXEC PGM=TNKC997
//FT06F001 DD SYSOUT=A
//FT05F001 DD *
/*

 LEC9011  IEF403I LEC9011  STARTED     TIME=13.52.52
 LEC9011  IEF234E D 6AC,ASP6AC
*LEC9011 *37 IECASPO 6AC IS LEC9011  A                  FT06F001
*LEC9011 *38 IECASPO 6AE IS LEC9011                     ASPI0001
 LEC9011  IEC202E K 6AE,017345,NL,LEC9011,
 LEC9011  TI=LEC9011 CC=00442705 P=2777100 T J=LEC27011 N=J.ATKINSON A=7345
 LEC9011  IEF404I LEC9011  ENDED       TIME=13.53.12
//LEC9011 JOB (00442705002777100TLEC27011),'J.ATKINSON',PRTY=4,CLASS=A,*
// TIME=(005),REGION=256K
//JOBLIB  DD DSN=DCPROD.LIB03,DISP=SHR
//        EXEC PGM=TNKC997
//FT06F001 DD SYSOUT=A
//FT05F001 DD UNIT=(CTC,,DEFER),DSNAME=&&ASPI0001,              *
// DISP=(OLD,DELETE),VOL=SER=017345,DCB=(LRECL=80,BLKSIZE=80,RECFM=F)
//
IEF236I ALLOC. FOR LEC9011
IEF237I 147   ALLOCATED TO JOBLIB
IEF237I 6AC   ALLOCATED TO FT06F001
IEF237I 6AE   ALLOCATED TO FT05F001
IEF142I - STEP WAS EXECUTED - COND CODE 0000
IEF285I   DCPROD.LIB03                                  PASSED
IEF285I   VOL SER NOS= DC5002.
IEF285I   SYS76113.T134909.RV001.LEC9011.ASPDA001       DELETED
IEF285I   VOL SER NOS= ASP6AC.
IEF285I   SYS76113.T134939.RV001.LEC9011.ASPI0001       DELETED
IEF285I   VOL SER NOS= 017345.
IEF373I STEP /        / START 76113.1352
IEF374I STEP /        / STOP  76113.1353 CPU    0MIN 01.39SEC STOR VIRT 100K
$$$$$$$$$$$$$$$$$$$$$$$$$$$$$$$$$$$$$$$$$$$$$$$$$$$$$$$$$$$$$$$$$$$$$$$$$$$$$$$$$$$$$$$$$$$$$$$$$$$$$$$$$$$$$$$$$$$$$$$$$$$$$$$$$$$$
$                                                                                                                                  $
$                                             PACER DATA ACQUISITION SYSTEM                                                        $
$                                                                                                                                  $
* STEP NAME                     START TIME 13.52.52.00    MAIN CORE REQD   256 K    LCS CORE REQD     0 K     STEP CPU      00.00.01.39 *
* PGM NAME        TNKC997       STOP  TIME 13.53.11.52    MAIN CORE USED   100 K    LCS CORE USED     0 K     JOB  CPU      00.00.01.39 *
* DISPATCH PRTY  1              ELAP. TIME 00.00.19.52    MAIN CORE BORRWD   0 K    LCS CORE BORRWD   0 K     CONDITION CODE       0000 *
*                                                                                                                                  *
$$$$$$$$$$$$$$$$$$$$$$$$$$$$$$$$$$$$$$$$$$$$$$$$$$$$$$$$$$$$$$$$$$$$$$$$$$$$$$$$$$$$$$$$$$$$$$$$$$$$$$$$$$$$$$$$$$$$$$$$$$$$$$$$$$$$
$                                                        EXCP STATISTICS                                                           $
$                                                                                                                                  $
$ UNIT   EXCP COUNT    UNIT   EXCP COUNT    UNIT   EXCP COUNT    UNIT   EXCP COUNT    UNIT   EXCP COUNT    UNIT   EXCP COUNT          $
$                                                                                                                                  $
$ 147            0     6AC          453     6AE           43                                                                       $
$                                                     EXCP TOTAL       476                                                         $
$$$$$$$$$$$$$$$$$$$$$$$$$$$$$$$$$$$$$$$$$$$$$$$$$$$$$$$$$$$$$$$$$$$$$$$$$$$$$$$$$$$$$$$$$$$$$$$$$$$$$$$$$$$$$$$$$$$$$$$$$$$$$$$$$$$
IEF376I STEP/        / TOTAL EXCP 000476
IEF285I   DCPROD.LIB03                                  KEPT
IEF285I   VOL SER NOS= DC5002.
IEF375I  JOB /LEC9011 / START 76113.1352
IEF376I  JOB /LEC9011 / STOP  76113.1353 CPU    0MIN 01.39SEC
```

FE372I JOB /LEC9011 / START 76113,1352
FE374I JOB /L[illegible]011 / STOP 76113,1353 CPU 0MIN 01.39SEC

PACES DATA ACQUISITION SYSTEM

JOB LOG NUMBER = LEC9011 76113 13.49.09.35

PROGRAMMER	J.ATKINSON	DATE	04/22/76	76.113	INITIATION TIME	13.52.52.00	
ACCTG DATA	00442705002777100TLEC27011	CPU TIME	00.00.01.39		TERMINATION TIME	13.53.11.89	
JOBNAME	LEC9011	PRIORITY	02		ELAPSED TIME	00.00.19.89	
SYSTEM TO	58 = 5D	CLASS	A		COMPLETION STATUS	C0000	

```
LL          EEEEEEEEEEEE    CCCCCCCCCC    99999999999    0000000      11      11
LL          EEEEEEEEEEEE    CCCCCCCCCCCC  999999999999   000000000    111     111
LL          EE              CC      CC    99      99     00      00  1111    1111
LL          EE              CC      CC    99      99     00      00    11      11
LL          EE              CC            99      99     00      00    11      11
LL          EEEEEEEEE       CC            99      99     00      00    11      11
LL          EEEEEEEEE       CC            99      99     00      00    11      11
LL          EE              CC            99      99     00      00    11      11
LL          EE              CC      CC    99      99     00      00    11      11
LL          EE              CC      CC    99      99     00      00    11      11
LLLLLLLLLLLL EEEEEEEEEEEE   CCCCCCCCCCCC  999999999999   000000000   111111  111111
LLLLLLLLLLLL EEEEEEEEEEEE   CCCCCCCCCCCC  999999999999   000000000   111111  111111

JJ          000000000000    AAAAAAAAAAAA    777777777777    33 33333333      44      5555555555555
JJ          000000000000    AAAAAAAAAAAA    777777777777    33 333333333     444     5555555555555
JJ          00      00      AA      AA      77      77      33      33      4444    55
JJ          00      00      AA      AA              77              33    44 44     55
JJ          00      00      AA      AA              77              33   44  44     55
JJ          00      00      AAAAAAAAAAAA            77             333   44  44     555555555555
JJ          00      00      AAAAAAAAAAAA            77             333   44  44     5555555555555
JJ          00      00      AA      AA              77              33   44444444444     55
JJ      JJ  00      00      AA      AA              77              33   44444444444     55
JJ      JJ  00      00      AA      AA              77      33      33      44      55      55
JJJJJJJJJJJJ    000000000000    AAAAAAAAAAAA    77      333333333333    44      5555555555555
 JJJJJJJJJJ     000000000000    AAAAAAAAAAAA    77      3333333333      44      55555555555

FFFFFFFFFFFF    TTTTTTTTTTTT    0000000     666666666666    FFFFFFFFFFFF    0000000     0000000     11
FFFFFFFFFFFF    TTTTTTTTTTTT    000000000   666666666666    FFFFFFFFFFFF    000000000   000000000   111
FF              TT      00      00          66              FF              00      00  00      00  1111
FF              TT      00      00          66              FF              00      00  00      00    11
FF              TT      00      00          66              FF              00      00  00      00    11
FFFFFFFFF       TT      00      00          666666666666    FFFFFFFFF       00      00  00      00    11
FFFFFFFFF       TT      00      00          666666666666    FFFFFFFFF       00      00  00      00    11
FF              TT      00      00          66      66      FF              00      00  00      00    11
FF              TT      00      00          66      66      FF              00      00  00      00    11
FF              TT      00      00          66      66      FF              00      00  00      00    11
FF              TT      000000000           666666666666    FF              000000000   000000000   111111
FF              TT      0000000             66666666666     FF              0000000     0000000     111111

J.ATKINSON 00042705 7345 A LFC9011 FT06F001
```

```
LATERALLY LOADED PILE PROGRAM

BEAM COLUMN ANALYSIS USING RIGID LINK FINITE ELEMENT TECHNIQUES .

NUMBER OF PROBLEMS IN SET =     1

GENERAL PROBLEM TITLE =   4-PILE ACMR STRUCTURE -- U.S. NAVY (36-IN. DIAMETER PILING)  J.ATKINS)
```

PROBLEM DESCRIPTION = MUDLINE CONDITIONS V=98.8KIP R=5858102 P= 1712 KIP COMP.

TABLE 1 = PROGRAM CONTROLS DATA FOR PROB NO. 1

PRIOR DATA OPTIONS (HOLD = 1) DEFLS.

	TABLE NUMBER				
	2	3	4A	4B	5
0	0	0	0	0	0

NUMBER OF CARDS INPUT THIS PROBLEM

	TABLE NUMBER				
	-	3	4A	4B	5
	1	0	3	5	30

LIST OF MONITOR STATIONS = 5 10 15 20 30

TABLE 2 CONSTANTS AND ITERATION CONTROL DATA

NUMBER OF INCREMENTS = 60
CALCULATE STRESSES (YES =1) (NO = 0) 1
INCREMENT LENGTH = 0.3600 02
MAXIMUM ALLOWABLE DEFLECTION = 0.100D 03
DEFLECTION CONTROL TOLERANCE = 0.100D-02
MODULUS OF ELASTICITY = 0.3000 05
PILE RADIUS = 0.1800 02
STA. AT WHICH FORCES AND DEFLECTIONS SPECIFIED FOR RETENTION = 1

DEFLECTION CLOSURE TOLERANCE LESS THAN 0.001 SUGGESTED

TA LE 3 - SPECIFIED DEFLECTIONS AND SLOPES

STATION	CASE	DEFLECTION	SLOPE
		NONE SPECIFIED	

TABLE 4A - PILE PROPERTIES

PROGRAM AUTOMATICALLY AVERAGES MOMENT OF INERTIA
AND AREA VALUES AT CHANGES IN A AND I THUS, I
VALUES FOR TOP AND BOTTOM ELEMENTS ARE HALVED.

FROM STA.	TO STA.	I	A
0	7	0.277C 05	0.188D 03
7	40	0.242D 05	0.163D 03
40	60	0.242D 05	0.163D 03

TABLE 4B - PILE LOADINGS

FROM	TO	CONT.	Q	S	T	R	P
0	0	0	0.988D 02	0.0	0.0	0.586D 07	0.0
0		1	0.0	0.0	0.0	0.0	-0.171D 04
	17	1	0.0	0.0	0.0	0.0	-0.131D 04
	33	1	0.0	0.0	0.0	0.0	-0.910D 03
	50	0	0.0	0.0	0.0	0.0	-0.600D 02

PROGRAM ASSUMES LOADING OF TABLES 4B AND 5 TS APPLIED AS
CONCENTRATED LOADING AT INCREMENT POINTS. THEORETICAL SPRINGS
CONNECTING RIGID FINITE ELEMENTS ARE LOCATED AT INCREMENT POINTS.

TABLE 5 - NONLINEAR LOAD AND SUPPORT CURVES

FROM	TO	CONT.	QMULTIPLIER	WMULTIPLIER	TOTAL NO. OF POINTS	SYMMETRY
0		1	-0.300D-01	0.100D-02	2	1

ACTUAL Q-W CURVE POINTS

Q	0.300D 04	0.0	0.0	0.300D 04
W	-0.990D 02	-0.980D 02	0.980D 02	0.990D 02

FROM	TO	CONT.	QMULTIPLIER	WMULTIPLIER	TOTAL NO. OF POINTS	SYMMETRY
	2	1	-0.300D-01	0.100D-02	2	1

ACTUAL Q-W CURVE POINTS

Q	0.300D 04	0.0	0.0	-0.300D 04
W	-0.990D 02	-0.980D 02	0.980D 02	0.990D 02

FROM	TO	CONT.	QMULTIPLIER	WMULTIPLIER	TOTAL NO. OF POINTS	SYMMETRY
	3	1	-0.300D-01	0.100D-02	8	1

ACTUAL Q-W CURVE POINTS

Q	0.879D 01	0.879D 01	0.879D 01	0.666D 01	0.606D 01	0.522D 01	0.432D 01	0.306D 01
W	-0.999D 02	-0.200D 02	-0.113D 01	-0.500D 00	-0.300D 00	-0.180D 00	-0.700D-01	-0.160D-01
Q	-0.306D 01	-0.432D 01	-0.522D 01	-0.606D 01	-0.666D 01	-0.879D 01	-0.879D 01	-0.879D 01
W	0.160D-01	0.700D-01	0.180D 00	0.300D 00	0.500D 00	0.113D 01	0.200D 02	0.999D 02

FROM	TO	CONT.	QMULTIPLIER	WMULTIPLIER	TOTAL NO. OF POINTS	SYMMETRY
	5	1	-0.300D-01	0.100D-02	8	1

ACTUAL Q-W CURVE POINTS

Q	0.890D 02	0.890D 02	0.890D 02	0.556D 02	0.430D 02	0.333D 02	0.207D 02	0.798D 01
W	-0.999D 02	-0.200D 02	-0.113D 01	-0.500D 00	-0.290D 00	-0.170D 00	-0.630D-01	-0.900D-02
Q	-0.798D 01	-0.207D 02	-0.333D 02	-0.430D 02	-0.556D 02	-0.890D 02	-0.890D 02	-0.890D 02
W	0.900D-02	0.630D-01	0.170D 00	0.290D 00	0.500D 00	0.113D 01	0.200D 02	0.999D 02

FROM	TO	CONT.	QMULTIPLIER	WMULTIPLIER	TOTAL NO. OF POINTS	SYMMETRY
7	1		-0.300D-01	0.100D-02	8	1

ACTUAL Q-W CURVE POINTS

Q	0.187D 03	0.187D 03	0.187D 03	0.117D 03	0.908D 02	0.711D 02	0.456D 02	0.229D 02
W	-0.999D 02	-0.200D 02	-0.113D 01	-0.500D 00	-0.300D 00	-0.180D 00	-0.710D-01	-0.170D-01
Q	-0.229D 02	-0.456D 02	-0.711D 02	-0.908D 02	-0.117D 03	-0.187D 03	-0.187D 03	-0.187D 03
W	0.170D-01	0.710D-01	0.180D 00	0.300D 00	0.500D 00	0.113D 01	0.200D 02	0.999D 02

FROM	TO	CONT.	QMULTIPLIER	WMULTIPLIER	TOTAL NO. OF POINTS	SYMMETRY
9	1		-0.300D-01	0.100D-02	8	1

ACTUAL Q-W CURVE POINTS

Q	0.209D 03	0.209D 03	0.209D 03	0.131D 03	0.101D 03	0.788D 02	0.495D 02	0.218D 02
W	-0.999D 02	-0.200D 02	-0.113D 01	-0.500D 00	-0.290D 00	-0.170D 00	-0.660D-01	-0.120D-01
Q	-0.218D 02	-0.495D 02	-0.788D 02	-0.101D 03	-0.131D 03	-0.209D 03	-0.209D 03	-0.209D 03
W	0.120D-01	0.660D-01	0.170D 00	0.290D 00	0.500D 00	0.113D 01	0.200D 02	0.999D 02

FROM	TO	CONT.	QMULTIPLIER	WMULTIPLIER	TOTAL NO. OF POINTS	SYMMETRY
12	1		-0.300D-01	0.100D-02	8	1

ACTUAL Q-W CURVE POINTS

Q	0.492D 03	0.492D 03	0.492D 03	0.307D 03	0.242D 03	0.194D 03	0.150D 03	0.897D 02
W	-0.999D 02	-0.200D 02	-0.113D 01	-0.500D 00	-0.300D 00	-0.190D 00	-0.900D-01	-0.380D-01

W	0.380D-01	0.900D-01	0.190D 00	0.300D 00	0.500D 00	0.113D 01	0.200D 02	0.950D 02

FROM	TO	CONT.	QMULTIPLIER	WMULTIPLIER	TOTAL NO. OF POINTS	SYMMETRY
19	1		-0.300D-01	0.100D-02	8	1

ACTUAL Q-W CURVE POINTS

Q	0.765D 03	0.765D 03	0.765D 03	0.478D 03	0.377D 03	0.302D 03	0.210D 03	0.140D 03
W	-0.999D 02	-0.200D 02	-0.113D 01	-0.500D 00	-0.300D 00	-0.190D 00	-0.900D-01	-0.380D-01
Q	-0.140D 03	-0.210D 03	-0.302D 03	-0.377D 03	-0.478D 03	-0.765D 03	-0.765D 03	-0.765D 03
W	0.380D-01	0.900D-01	0.190D 00	0.300D 00	0.500D 00	0.113D 01	0.200D 02	0.999D 02

FROM	TO	CONT.	QMULTIPLIER	WMULTIPLIER	TOTAL NO. OF POINTS	SYMMETRY
26	1		-0.300D-01	0.100D-02	8	1

ACTUAL Q-W CURVE POINTS

Q	0.107D 04	0.107D 04	0.107D 04	0.666D 03	0.525D 03	0.421D 03	0.292D 03	0.194D 0.
W	-0.999D 02	-0.200D 02	-0.113D 01	-0.500D 00	-0.300D 00	-0.190D 00	-0.900D-01	-0.380D-01
Q	-0.194D 03	-0.292D 03	-0.421D 03	-0.525D 03	-0.666D 03	-0.107D 04	-0.107D 04	-0.107D 04
W	0.380D-01	0.900D-01	0.190D 00	0.300D 00	0.500D 00	0.113D 01	0.200D 02	0.999D 02

FROM	TO	CONT.	QMULTIPLIER	WMULTIPLIER	TOTAL NO. OF POINTS	SYMMETRY
49	1		-0.300D-01	0.100D-02	8	1

ACTUAL Q-W CURVE POINTS

Q	0.199D 04	0.199D 04	0.199D 04	0.125D 04	0.983D 03	0.788D 03	0.547D 03	0.364D 03
W	-0.999D 02	-0.200D 02	-0.113D 01	-0.500D 00	-0.300D 00	-0.190D 00	-0.900D-01	-0.380D-01
Q	-0.364D 03	-0.547D 03	-0.78[illegible] 03	-0.983D 03	-0.125D 04	-0.199D 04	-0.199D 04	-0.199D 04
W	0.380D-01	0.900D-01	0.190D 00	0.300D 00	0.500D 00	0.113D 01	0.200D 02	0.999D 02

PROBLEM NUMBER = 1

PROBLEM DESCRIPTION = MUDLINE CONDITIONS V=98.8KIP R=5858102 P= 1712 KIP COMP.

ITERATION MONITOR DATA

ITER. NUM.	OFF CURVES	NO. STAS. NOT CLOSED	DEFLS.AT MONITOR STAS. 5	10	15	20	30
1	NO	14	0.496D-01	-0.638D-02	0.809D-04	0.312D-04	0.198D-06
2	NO	14	0.133D 00	-0.819D-02	-0.523D-03	0.999D-04	0.331D-06
3	NO	9	0.155D 00	-0.687D-02	-0.815D-03	0.120D-03	0.324D-06
4	NO	9	0.157D 00	-0.645D-02	-0.853D-03	0.121D-03	0.314D-06
5	NO	0	0.157D 00	-0.645D-02	-0.853D-03	0.121D-03	0.314D-06

RESULTS

STA.	DIST. ALONG PILE	DEFL.	SLOPE	MOMENT	BEAM COLUMN SHEAR	APPLIED NON LINEAR LATERAL LOADING	COMBINED STRESS(MAX.)
0	0.0	0.534	-0.1671D-02	-0.9790 04		0.0	-15.460
1	36.000	0.466	-0.2016D-02	-0.6120 04	102.198	0.0	-12.948
2	72.000	0.389	-0.2201D-02	-0.2440 04	102.460	0.0	-10.428
3	108.000	0.308	-0.2227D-02	0.1260 04	99.409	-6.083	-9.536
4	144.000	0.229	-0.2097D-02	0.4720 04	85.204	-21.806	-11.664
5	180.000	0.157	-0.1835D-02	0.7390 04	57.949	-31.771	-13.272
6	216.000	0.097	-0.1482D-02	0.8890 04	22.416	-38.104	-14.125
7	252.000	0.050	-0.1041D-02	0.9000 04	-15.701	-36.822	-15.051
8	288.000	0.019	-0.6807D-03	0.7760 04	-46.958	-24.422	-15.111
9	324.000	0.001	-0.3488D-03	0.5620 04	-60.675	-1.983	-13.374
10	360.000	-0.006	-0.1251D-03	0.3400 04	-55.564	12.881	-11.573
11	396.000	-0.008	-0.7251D-06	0.1620 04	-40.677	17.261	-10.110
12	432.000	-0.006	0.5108D-04	0.4670 03	-24.453	15.337	-9.106
13	468.000	-0.004	0.5924D-04	-0.1380 03	-11.390	10.808	-8.717
14	504.000	-0.002	0.4706D-04	-0.3530 03	-2.916	6.106	-8.733
15	540.000	-0.001	0.2968D-04	-0.3480 03	1.409	2.494	-8.584
16	576.000	-0.000	0.1482D-04	-0.2520 03	2.824	0.296	-8.368
17	612.000	0.000	0.4992D-05	-0.1440 03	2.633	-0.704	-8.144
18	648.000	0.000	-0.1323D-06	-0.6220 02	1.827	-0.921	-7.930
19	684.000	0.000	-0.1995D-05	-0.1290 02	0.994	-0.749	-7.740
20	720.000	0.000	-0.2083D-05	0.9380 01	0.385	-0.468	-7.584
21	756.000	0.000	-0.1482D-05	0.1480 02	0.040	-0.221	-7.434
22	792.000	0.000	-0.8109D-06	0.1230 02	-0.101	-0.060	-7.279
23	828.000	-0.000	-0.3202D-06	0.7530 01	-0.122	0.019	-7.122
24	864.000	-0.000	-0.4771D-07	0.3460 01	-0.092	0.043	-6.966
25	900.000	-0.000	0.6108D-07	0.9260 00	-0.052	0.038	-6.811
26	936.000	-0.000	0.7777D-07	-0.2530 00	-0.021	0.024	-6.657
27	972.000	-0.000	0.5737D-07	-0.5700 00	-0.003	0.011	-6.503
28	1008.000	-0.000	0.3120D-07	-0.4850 00	0.004	0.003	-6.350
29	1044.000	0.000	0.1193D-07	-0.2920 00	0.005	-0.001	-6.197
30	1080.000	0.000	0.1546D-08	-0.1270 00	0.004	-0.002	-6.043
31	1116.000	0.000	-0.2331D-08	-0.2920-01	0.002	-0.002	-5.890
32	1152.000	0.000	-0.2737D-08	0.1280-01	0.001	-0.001	-5.736
33	1188.000	0.000	-0.1883D-08	0.2160-01	0.000	-0.000	-5.583
34	1224.000	0.000	-0.9344D-09	0.1660-01	-0.000	-0.000	-5.276
35	1260.000	-0.000	-0.2987D-09	0.9000-02	-0.000	0.000	-4.969
36	1296.000	-0.000	0.6603D-11	0.3310-02	-0.000	0.000	-4.663
37	1332.000	-0.000	0.9695D-10	0.3300-03	-0.000	0.000	-4.356
38	1368.000	-0.000	0.8767D-10	-0.7040-03	-0.000	0.000	-4.049
39	1404.000	-0.000	0.5159D-10	-0.7510-03	0.000	0.000	-3.742
40	1440.000	0.000	0.2112D-10	-0.4760-03	0.000	-0.000	-3.436
41	1476.000	0.000	0.3997D-11	-0.2130-03	0.000	-0.000	-3.129
42	1512.000	0.000	-0.2557D-11	-0.5170-04	0.000	-0.000	-2.822
43	1548.000	0.000	-0.3451D-11	0.1560-04	0.000	-0.000	-2.515
44	1584.000	0.000	-0.2344D-11	0.2900-04	0.000	-0.000	-2.209
45	1620.000	0.000	-0.1096D-11	0.2130-04	-0.000	-0.000	-1.902
46	1656.000	-0.000	-0.3043D-12	0.1660-04	-0.000	0.000	-1.595
47	1692.000	-0.000	0.4439D-13	0.3450-05	-0.000	0.000	-1.288

50	1800.000	0.000	0.1502D-12	-0.1670-18	-0.000	0.0	-0.184
51	1836.000	0.000	0.1502D-12	-0.132D-18	0.000	0.0	-0.000
52	[illegible]2.000	0.000	0.1502D-12	-0.101D-18	0.000	0.0	-0.000
53	[illegible]4.000	0.000	0.1502D-12	-0.760D-19	.000	0.0	-0.000
54	1944.000	0.000	0.1502D-12	-0.525D-19	0.000	0.0	-0.000
55	1980.000	0.000	0.1502D-12	-0.340D-19	0.000	0.0	-0.000
56	2016.000	0.000	0.1502D-12	-0.199D-19	0.000	0.0	-0.000
57	2052.000	0.000	0.1502D-12	-0.724D-20	0.000	0.0	-0.000
58	2088.000	0.000	0.1502D-12	-0.362D-20	0.000	0.0	-0.000
59	2124.000	0.000	0.1502D-12	-0.181D-20	0.0	0.0	-0.000
60	2160.000	0.000	0.1502D-12	-0.362D-20		0.0	-0.000

USER SHOULD NOTE THAT SLOPE LISTED ABOVE IS RELATIVE TO SLOPE AT BOTTOM OF PILE
AND IS NOT TRUE SLOPE RELATIVE TO ORIGINAL PILE DIRECTION

USER SHOULD NOTE THAT BEAMCOLUMN SHEAR LISTED IS THAT DUE TO BOTH LATERAL AND AXIAL EFFECTS
ALSO THAT APPLIED LATERAL LOADING IS TOTAL FOR ONE INCREMENT LENGTH

MOVEMENTS AND REACTIONS STORED FOR STIFFNESS COEFFICIENT DEVELOPMENT USE

DEFLECTIONS	ROTATIONS	MOMENTS	LATERAL SHEAR	AT STATION
0.866320 00	-0.201590-02	-0.612140 [illegible]	0.987750 02	1

USER SHOULD NOTE LATERAL SHEAR ABOVE IS TRUE SHEAR AT STATION
SHEAR GIVEN IS PERPENDICULAR TO ORIGINAL UNDEFLECTED MEMBER AXIS.

```
ASP JOB NO. = 7345                                        DATE = 76.113

//LEC9011 JOB (0044270500277710OTLEC27011),'J.ATKINSON',PRTY=4,CLASS=A,C7345

ELAPSED TIME OK MAIN = 8          = 000.39, START TIME = 13.52.53

DDNAME = SYSMSG                    PRINTED ON RM027PR1, LINES = 000077
DDNAME = FT06F001                  PRINTED ON RM027PR1, LINES = 000453
LINES OUTPUT FOR THIS JOB = 000510

CARDS FROM MAIN FOR THIS JOB = NONE
```

EXHIBIT B

STRAN - Space Fram Analysis

6000 REMOTE BATCH

4 PILE ACMR STRUCTURE
SPIAL RUN B.

UNITED COMPUTING 67, APEX/SL, B.0.25

13.30.59. 04/30/76.

```
JJJJJJJJJJJJ  YY        YY  JJJJJJJJJJJJ   333333333333   QQQQQQQQQQ   UU        UU   GGGGGGGGGG
JJJJJJJJJJJJ  YY        YY  JJJJJJJJJJJJ  3333333333333  QQQQQQQQQQQQ  UU        UU  GGGGGGGGGGGG
     JJ       YY        YY       JJ       3         33  QQ        QQ  UU        UU  GG         G
     JJ       YY        YY       JJ                 33  QQ        QQ  UU        UU  GG
     JJ       YY        YY       JJ                33   QQ        QQ  UU        UU  GG
     JJ       YY        YY       JJ               33    QQ        QQ  UU        UU  GG
     JJ       YYY      YYY       JJ              33     QQ        QQ  UU        UU  GG
     JJ        YYY    YYY        JJ             33      QQ        QQ  UU        UU  GG
     JJ         YYY  YYY         JJ            333      QQ        QQ  UU        UU  GG       GGGG
     JJ           YYYY           JJ             33      QQ        QQ  UU        UU  GG       GGGG
     JJ            YY            JJ              33     QQ        QQ  UU        UU  GG         GG
     JJ            YY            JJ               33    QQ    QQ  QQ  UU        UU  GG         GG
     JJ            YY            JJ                33   QQ     QQ  QQ  UU        UU  GG         GG
JJ   JJ            YY       JJ   JJ       3         33  QQ      QQQQ  UU        UU  GG         GG
JJJJJJ             YY       JJJJJJJ       3333333333333  QQQQQQQQQQQQ  UUUUUUUUUUUU  GGGGGGGGGGGG
 JJJJJ             YY        JJJJJ        333333333333   QQQQQQQQQQ    UUUUUUUUUU    GGGGGGGGGG
```

```
*****************************************************************************
*      S Y N E R C O M   T E C H N O L O G Y   U S E R   B U L L E T I N    *
*                                                                           *
*                                                                           *
*                                                                           *
*                          MARCS BULLETIN NO. 4            04/05/76         *
*                            *** STRAN  6 ***                               *
*                                                                           *
*                                                                           *
*                   S T R A N   R E L E A S E   M O D 1 2                   *
*                                                                           *
*                                                                           *
*     ALL ERROR MESSAGES WERE NUMBERED FOR EASY REFERENCE.  A FEW INSTANCES *
*     OF PRINTING THE WRONG ERROR MESSAGE WERE CORRECTED.                   *
*                                                                           *
*     THE DAYFILE MESSAGE OF UNIT NO. FOLLOWED BY FOUR INTEGERS WAS         *
*     REPLACED BY A MORE EXPLANATORY MESSAGE.                               *
*                                                                           *
*     NEW FEATURE:  USER SELECTION OF METHOD FOR CALCULATING ALLOWABLE      *
*        MEMBER STRESSES AND UNITY CHECKS:                                  *
*        1.  ON THE OPTIONS CARD COLUMNS 25-26 TWO NEW SELECTIONS NA AND    *
*            AP WERE ADDED TO PREVIOUSLY ALLOWED SELECTIONS BLANKS AND UC.  *
*            BLANKS-- SUPPRESSES CALCULATIONS OF ALLOWABLE MEMBER STRESSES  *
*                     AND UNITY CHECKS.                                     *
*            UC     -- REQUESTS CALCULATION IN ACCORDANCE WITH AMERICAN     *
*                      INSTITUTE OF STEEL CONSTRUCTION (AISC) 1969 CODE.    *
*                      INVESTIGATION OF LOCAL BUCKLING FOLLOWS THE RECOM-   *
*                      MENDATION OF THE COLUMN RESEARCH COUNCIL.  THE UC    *
*                      OPTION HAS NOT CHANGED FROM PRIOR STRAN RELEASES.    *
*            NA     -- SAME AS UC, BUT IN COMPUTING COMBINED UNITY CHECK    *
*                      AISC FORMULA 1.6-2 IS ALWAYS USED, FORMULAS 1.6-1A   *
*                      AND 1.6-1B ARE NEVER USED.                           *
*            AP     -- REQUESTS CALCULATION IN ACCORDANCE WITH AMERICAN     *
*                      PETROLEUM INSTITUTE (API) REPORT API-RP-2A.          *
*                                                                           *
*        2.  THE SELECTION PS ON THE OPTIONS CARD COLUMNS 27-28 WAS DE-     *
*            LETED.  IF SELECTED, IT WILL BE IGNORED AND A WARNING MESSAGE  *
*            WILL BE PRINTED.                                               *
*                                                                           *
*        3.  GROUP CARD COLUMN 70:  IF THE LETTER N APPEARS, LOCAL BUCKLING *
*            EFFECTS WILL NOT BE INVESTIGATED FOR ALL TUBULAR MEMBERS       *
*            HAVING THIS GROUP CODE.                                        *
*                                                                           *
*                                                                           *
*     NOTE -  IF YOU DO NOT HAVE ALL OF THE BULLETINS, YOU                  *
*             MAY OBTAIN A COPY BY SUBMITTING A RUN                         *
*             WITH THE FOLLOWING CONTROL CARDS:                             *
*                                                                           *
*                          GET,MARCBUL.                                     *
*                          COPYSBF,MARCBUL.                                 *
*                                                                           *
*****************************************************************************
```

```
*************************************************
*                                               *
*                    STRAN                      *
* A SYNERCOM TECHNOLOGY, INC. DEVELOPMENT       *
*              RELEASE 6  MOD 12                *
*                  MARCH 1976                   *
*                                               *
*************************************************
```

DATE 08/30/76

4-PILE ACHR STRUCTURE -- U.S. NAVY (36-IN. DIAMETER PILING) -- J.ATKINSON

PROGRAM OPTIONS

THE FOLLOWING OPTIONS HAVE BEEN REQUESTED FOR THIS ANALYSIS

```
INPUT
          ....CARD PLUS DATA FILE INPUT

INPUT UNITS
          ....ENGLISH

OUTPUT UNITS
          ....ENGLISH

EXECUTION
          ....UNITY CHECK
              ..UNITY CHECKS COMPUTED BY AMERICAN INSTITUTE OF
                STEEL CONSTRUCTION 1969 CODE, SECTIONS 1.5, 1.6,
                LOCAL BUCKLING STRESS OF TUBULAR MEMBERS INVES-
                TIGATED BY COLUMN RESEARCH COUNCIL METHOD.
                RESULTS INVALID FOR A514 STEEL.
          ....NO. OF SEGMENTS            1
          ....VARBL MEMB. SEGMENTS/SECT  1

LOAD
          ....NO. BASIC LOAD CONDS.      3
          ....NO. COMBINED LOAD CONDS.   2

REPORT
          ....INPUT ECHO AND GROUP PROP        PRINT
          ....JOINT DEFLECTIONS                PRINT
          ....GROUP AND UN CHK SUMMARY         PRINT
          ....MEMBER STRESS REPORT NO.  1      PRINT
          ....MEMBER STRESS REPORT NO.  2      PRINT
          ....MEMBER STRESS REPORT NO.  3      PRINT
          ....REACTION FORCES AND MOMTS        PRINT
          ....EQUILIBRIUM CHECK                PRINT

EQUILIBRIUM CHECK EDIT VALUES
          ....FORCES    100.00 LB
          ....MOMENTS   100.00 IN-LB
```

4-PILE ACHR STRUCTURE -- U.S. NAVY (36-IN. DIAMETER PILING) -- J.ATKINSON
TUBULAR MEMBER PROPERTIES

*** E = 29000000.0 PSI, G = 11600000.0 PSI ***

GRP	M/S	JOINT THICK FT.	WT IN.	OD IN.	AX IN2	IX IN4	IY IN4	IZ IN4	FY KSI	KY	KZ	SHEAR AREA IN2	INPUT SEC LEN FT.
HB1	2	3.00	.500	18.00	21.21	967.51	483.76	483.76	36.0	1.0	1.0	21.21	-0.00
HB2	2	3.00	.500	18.00	27.49	2106.34	1053.17	1053.17	36.0	1.0	1.0	27.49	-0.00
DB1	2	3.00	.625	20.00	38.04	3573.94	1786.97	1786.97	36.0	.8	.8	38.04	-0.00
DB2	2	3.00	.500	18.00	27.49	2106.34	1053.17	1053.17	36.0	.8	.8	27.49	-0.00
XB1	2	2.00	.500	16.00	24.35	1463.88	731.94	731.94	36.0	.7	.7	24.35	-0.00
XB2	2	2.50	.500	18.00	27.49	2106.34	1053.17	1053.17	36.0	.7	.7	27.49	-0.00
XB3	2	2.50	.500	20.00	30.63	2913.73	1456.86	1456.86	36.0	.7	.7	30.63	-0.00
SSC	1	-0.00	1.250	30.00	112.90	23374.03	11687.02	11687.02	36.0	1.0	1.0	112.90	-0.00
JL1	1	-0.00	.500	40.00	62.05	24205.87	12102.94	12102.94	36.0	1.0	1.0	62.05	-0.00
P1	1	-0.00	1.250	36.00	136.46	41250.18	20625.09	20625.09	36.0	1.0	1.0	136.46	-0.00
P2	1	-0.00	1.500	36.00	162.58	48468.39	24234.20	24234.20	36.0	1.0	1.0	162.58	-0.00
DB3	2	2.50	.375	14.00	16.05	745.52	372.76	372.76	36.0	.8	.8	16.05	-0.00
HB3	2	2.50	.375	14.00	16.05	745.52	372.76	372.76	36.0	1.0	1.0	16.05	-0.00

STRAN - GROUP PR PERTIES REPORT

4-PILE ACHR STRUCTURE -- U.S. NAVY (36-IN. DIAMETER PILING) -- J.ATKINSON
WIDE FLANGE/WIDE FLANGE COMPACT MEMBER PROPERTIES

GRP	M/S	JOINT THICK FT.	FLANGE THICK IN.	FLANGE WIDTH IN.	WEB THICK IN.	FILET RADIUS IN.	DEPTH IN.	AX IN2	IX IN4	IY IN4	IZ IN4	FY KSI	KY	KZ	LB FT.	INPUT SEC LEN FT.
		*** E = 29000000.0 PSI, G = 11600000.0 PSI ***														
-21	1	-0.00	.522	8.21	.375	.563	20.80	16.20	1.24	1140.00	48.30	36.0	1.0	1.0	2.50	-0.00
-18	1	3.00	.630	7.53	.390	.438	18.12	16.20	1.06	891.00	45.00	36.0	1.0	1.0	2.50	-0.00
-17	1	-0.00	.524	6.02	.316	.438	17.90	11.80	.81	612.00	19.10	36.0	1.0	1.0	2.50	-0.00

4-PILE ACHR STRUCTURE -- U.S. NAVY (36-IN. DIAMETER PILING) -- J.ATKINSON
PRISMATIC SECTION MEMBERS

*** E = 29000000.0 PSI, G = 11600000.0 PSI ***

GRP	M/S	JOINT THICK FT.	Z-DPTH IN.	Y-DPTH IN.	AX IN2	IX IN4	IY IN4	IZ IN4	FY KSI	KY	KZ	INPUT SEC LEN FT.
HBN	2	-0.00	10.00	5.00	50.00	30000.00	30000.00	30000.00	36.0	1.0	1.0	-0.00
P3	1	-0.00	36.00	36.00	12.04	48480.00	24240.00	24240.00	36.0	1.0	1.0	-0.00

STRAN INPUT DATA

4-PILE ACHR STRUCTURE -- U.S. NAVY (36-IN. DIAMETER PILING) -- J.ATKINSON

```
                    1    1    2    2    3    3    4    4    5    5    6    6    7    7    8
LINE NO. 1....5....0....5....0....5....0....5....0....5....0....5....0....5....0....5....0

   1  SECT
   2  SECT W21X55     WF  16.2      1.24   1140       48.3  8.215 .522 20.8  .375 .563
   3  SECT W18X55     WF  16.2      1.66    891       45    7.532 .630 18.12 .390 .438
   4  SECT W18X40     WF  11.8      0.81    612       19.1  6.018 .524 17.9  .316 .438
   5  SECT WISHBON    PRI 50.0  30000   30000   30000     10          5
   6  SECT PILING3    PRI 12.04 48480   24240   24240     36          36
   7  GRUP
   8  GRUP W21 W21X55                 29   11.6 36   1              2.5
   9  GRUP W18 W18X55                               1 3.0           2.5
  10  GRUP W17 W18X40                               1               2.5
  11  GRUP HB1            14    .500                2 3.0
  12  GRUP HB2            18    .500                2 3.0
  13  GRUP DB1            20    .625                2 3.0 0.4 0.8
  14  GRUP DB2            18    .500                2 3.0 0.8 0.8
  15  GRUP XB1            16    .500                2 2.0 0.7 0.7
  16  GRUP XB2            18    .500                2 2.3 0.7 0.7
  17  GRUP XB3            20    .500                2 2.5 0.7 0.7
  18  GRUP SSC            30   1.250                1
  19  GRUP JC1            40    .500                1
  20  GRUP P1             36   1.250                1
  21  GRUP P2             36   1.500                1
  22  GRUP WBN WISHBON                              2
  23  GRUP DB3            14    .375                2 2.5 0.8 0.8
  24  GRUP HB3            14    .375                2 2.5
  25  GRUP P3  PILING3                              1
  26  MEMBER
  27  MEMBER    5   4 W21
  28  MEMBER    6   3 W17
  29  MEMBER    7   2 W17
  30  MEMBER    8   1 W21
  31  MEMBER    5   6 W21
  32  MEMBER    6   7 W21
  33  MEMBER    7   8 W21
  34  MEMBER    4   3 W21
  35  MEMBER    3   2 W21
  36  MEMBER    2   1 W21
  37  MEMBER   12   5 SSC                                                    30
  38  MEMBER   11   4 SSC                                                    30
  39  MEMBER   14   8 SSC                                                    30
  40  MEMBER    9   1 SSC                                                    30
  41  MEMBER   12  11 W18
  42  MEMBER   13  10 W18
  43  MEMBER   14   9 W18
  44  MEMBER   12  13 W18
  45  MEMBER   13  14 W18
  46  MEMBER   11  10 W18
  47  MEMBER   10   9 W18
  48  MEMBER   17  12 SSC                                                    30
  49  MEMBER   16  11 SSC                                                    30
```

4-PILE ACHR STRUCTURE -- U.S. NAVY (36-IN. DIAMETER PILING) -- J.ATKINSON

```
                    1    1    2    2    3    3    4    4    5    5    6    6    7    7    8
LINE NO. 1....5....0....5....0....5....0....5....0....5....0....5....0....5....0....5....0
    50  MEMBER  18  14 SSC                                                          30
    51  MEMBER  15   9 SSC                                                          30
    52  MEMBER  17  11 DB3                                                          14
    53  MEMBER  18   9 DB3                                                          14
    54  MEMBER  17  14 DB3                                                          14
    55  MEMBER  16   9 DB3                                                          14
    56  MEMBER  17  16 HB3                                                          14
    57  MEMBER  18  15 HB3                                                          14
    58  MEMBER  17  18 HB3                                                          14
    59  MEMBER  16  15 HB3                                                          14
    60  MEMBER  21  17 SSC                                                          30
    61  MEMBER  20  16 SSC                                                          30
    62  MEMBER  22  18 SSC                                                          30
    63  MEMBER  19  15 SSC                                                          30
    64  MEMBER  25  21 JL1                                                       F  40
    65  MEMBER  24  20 JL1                                                       F  40
    66  MEMBER  26  22 JL1                                                       F  40
    67  MEMBER  23  19 JL1                                                       F  40
    68  MEMBER  25  24 HB1                                                          14
    69  MEMBER  26  23 HB1                                                          14
    70  MEMBER  25  26 HB1                                                          14
    71  MEMBER  24  23 HB1                                                          14
    72  MEMBER  25  27 XB1                                                          16
    73  MEMBER  27  23 XB1                                                          16
    74  MEMBER  26  27 XB1                                                          16
    75  MEMBER  27  24 XB1                                                          16
    76  MEMBER  30  25 JL1                                                       F  40
    77  MEMBER  29  24 JL1                                                       F  40
    78  MEMBER  31  26 JL1                                                       F  40
    79  MEMBER  28  23 JL1                                                       F  40
    80  MEMBER  29  25 DB1                                                          20
    81  MEMBER  28  26 DB1                                                          20
    82  MEMBER  31  25 DB1                                                          20
    83  MEMBER  28  24 DB1                                                          20
    84  MEMBER  30  29 HB1                                                          14
    85  MEMBER  31  28 HB1                                                          14
    86  MEMBER  30  31 HB1                                                          14
    87  MEMBER  29  28 HB1                                                          14
    88  MEMBER  33  32 XB2                                                          18
    89  MEMBER  32  28 XB2                                                          18
    90  MEMBER  31  32 XB2                                                          18
    91  MEMBER  32  29 XB2                                                          18
    92  MEMBER  35  30 JL1                                                       F  40
    93  MEMBER  34  29 JL1                                                       F  40
    94  MEMBER  36  31 JL1                                                       F  40
    95  MEMBER  33  28 JL1                                                       F  40
    96  MEMBER  35  29 DB2                                                          18
    97  MEMBER  36  28 DB2                                                          18
    98  MEMBER  35  31 DB2                                                          18
```

4-PILE ACPT STRUCTURE BY U.S. NAVY (36-IN. DIAMETER PILING) -- J.ATKINSON

```
                    1    1    2    2    3    3    4    4    5    5    6    6    7    7    8
LINE NO. 1...5....0....5....0....5....0....5....0....5....0....5....0....5....0....5....0

  99  MEMBER  34  28  DB2                                                    18
 100  MEMBER  35  34  HB2                                                    18
 101  MEMBER  36  33  HB2                                                    18
 102  MEMBER  35  36  HB2                                                    18
 103  MEMBER  34  33  HB2                                                    18
 104  MEMBER  35  37  XB3                                                    20
 105  MEMBER  37  33  XB3                                                    20
 106  MEMBER  36  37  XB3                                                    20
 107  MEMBER  37  34  XB3                                                    20
 108  MEMBER  42  35  JL1                                                 F  40
 109  MEMBER  40  34  JL1                                                 F  40
 110  MEMBER  44  36  JL1                                                 F  40
 111  MEMBER  38  33  JL1                                                 F  40
 112  MEMBER  35  41  DB2                                                    18
 113  MEMBER  41  34  DB2                                                    18
 114  MEMBER  36  45  DB2                                                    18
 115  MEMBER  45  33  DB2                                                    18
 116  MEMBER  35  43  DB2                                                    18
 117  MEMBER  43  36  DB2                                                    18
 118  MEMBER  34  39  DB2                                                    18
 119  MEMBER  39  33  DB2                                                    18
 120  MEMBER  42  41  HB2                                                    18
 121  MEMBER  41  40  HB2                                                    18
 122  MEMBER  44  45  HB2                                                    18
 123  MEMBER  45  38  HB2                                                    18
 124  MEMBER  42  43  HB2                                                    18
 125  MEMBER  43  44  HB2                                                    18
 126  MEMBER  40  39  HB2                                                    18
 127  MEMBER  39  38  HB2                                                    18
 128  MEMBER  42  46  XB3                                                    20
 129  MEMBER  46  38  XB3                                                    20
 130  MEMBER  44  46  XB3                                                    20
 131  MEMBER  46  40  XB3                                                    20
 132  MEMBER  25  55  WBN
 133  MEMBER  55  56  WBN          1111
 134  MEMBER  24  53  WBN
 135  MEMBER  53  54  WBN          1111
 136  MEMBER  26  57  WBN
 137  MEMBER  57  58  WBN          1111
 138  MEMBER  23  51  WBN
 139  MEMBER  51  52  WBN          1111
 140  MEMBER  30  63  WBN
 141  MEMBER  63  64  WBN          1111
 142  MEMBER  29  61  WBN
 143  MEMBER  61  62  WBN          1111
 144  MEMBER  31  65  WBN
 145  MEMBER  65  66  WBN          1111
 146  MEMBER  28  59  WBN
 147  MEMBER  59  60  WBN          1111
```

4-PILE ACHR STRUCTURE -- U.S. NAVY (36-IN. DIAMETER PILING) -- J.ATKINSON

```
                    1    1    2    2    3    3    4    4    5    5    6    6    7    7    8
LINE NO. 1....5....0....5....0....5....0....5....0....5....0....5....0....5....0....5....0

    148  MEMBER  35  71 WBN
    149  MEMBER  71  72 WBN          1111
    150  MEMBER  34  69 WBN
    151  MEMBER  69  70 WBN          1111
    152  MEMBER  36  73 WBN
    153  MEMBER  73  74 WBN          1111
    154  MEMBER  33  67 WBN
    155  MEMBER  67  68 WBN          1111
    156  MEMBER  42  79 WBN
    157  MEMBER  79  80 WBN          1111
    158  MEMBER  40  77 WBN
    159  MEMBER  77  78 WBN          1111
    160  MEMBER  44  81 WBN
    161  MEMBER  81  82 WBN          1111
    162  MEMBER  38  75 WBN
    163  MEMBER  75  76 WBN          1111
    164  MEMBER  21  56 P1                                                F  36   2
    165  MEMBER  56  64 P1                                                F  36   2
    166  MEMBER  64  72 P1                                                F  36   2
    167  MEMBER  72  80 P2                                                F  36   2
    168  MEMBER  20  54 P1                                                F  36   4
    169  MEMBER  54  62 P1                                                F  36   4
    170  MEMBER  62  70 P1                                                F  36   4
    171  MEMBER  70  78 P2                                                F  36   4
    172  MEMBER  22  59 P1                                                F  36   1
    173  MEMBER  58  66 P1                                                F  36   1
    174  MEMBER  66  74 P1                                                F  36   1
    175  MEMBER  74  82 P2                                                F  36   1
    176  MEMBER  19  52 P1                                                F  36   3
    177  MEMBER  52  60 P1                                                F  36   3
    178  MEMBER  60  68 P1                                                F  36   3
    179  MEMBER  68  76 P2                                                F  36   3
    180  MEMBER  80  102 P3                                               F  36   2
    181  MEMBER  78  104 P3                                               F  36   4
    182  MEMBER  82  101 P3                                               F  36   1
    183  MEMBER  76  103 P3                                               F  36   3
    184  MEMBER  17  47 XB1
    185  MEMBER  47  15 XB1
    186  MEMBER  18  47 XB1
    187  MEMBER  47  16 XB1
    188  JOINT
    189  JOINT   1    15     15    159                          UPERDECK
    190  JOINT   2    15      5    159                          UPERDECK
    191  JOINT   3    15     -5    159                          UPERDECK
    192  JOINT   4    15    -15    159                          UPERDECK
    193  JOINT   5   -15    -15    159                          UPERDECK
    194  JOINT   6   -15     -5    159                          UPERDECK
    195  JOINT   7   -15      5    159                          UPERDECK
    196  JOINT   8   -15     15    159                          UPERDECK
```

4-PILE ACKR STRUCTURE -- U.S. NAVY (36-IN. DIAMETER PILING) -- J.ATKINSON

LINE NO.	1...5....0	1	1	2	2	3	3	4	4	5	5	6	6	7	7	8	5....0	5....0	5....0
197	JOINT	9	15	15	144												LOERDECK		
198	JOINT	10	15	0	144												LOERDECK		
199	JOINT	11	15	-15	144												LOERDECK		
200	JOINT	12	-15	-15	144												LOERDECK		
201	JOINT	13	-15	0	144												LOERDECK		
202	JOINT	14	-15	15	144												LOERDECK		
203	JOINT	15	15	15	130												SUPERSTR		
204	JOINT	16	15	-15	130												SUPERSTR		
205	JOINT	17	-15	-15	130												SUPERSTR		
206	JOINT	18	-15	15	130												SUPERSTR		
207	JOINT	19	15	15	1005												SUPERSTR		
208	JOINT	20	15	-15	1005												SUPERSTR		
209	JOINT	21	-15	-15	1005												SUPERSTR		
210	JOINT	22	-15	15	1005												SUPERSTR		
211	JOINT	23	15.45	15.45	96												ELEV.+12		
212	JOINT	24	15.45	-15.45	96												ELEV.+12		
213	JOINT	25	-15.45	-15.45	96												ELEV.+12		
214	JOINT	26	-15.45	15.45	96												ELEV.+12		
215	JOINT	27	0	0	96												ELEV.+12		
216	JOINT	28	18.45	18.45	66												ELEV.-18		
217	JOINT	29	18.45	-18.45	66												ELEV.-18		
218	JOINT	30	-18.45	-18.45	66												ELEV.-18		
219	JOINT	31	-18.45	18.45	66												ELEV.-18		
220	JOINT	32	0	0	66												ELEV.-18		
221	JOINT	33	21.55	21.55	35												ELEV.-49		
222	JOINT	34	21.55	-21.55	35												ELEV.-49		
223	JOINT	35	-21.55	-21.55	35												ELEV.-49		
224	JOINT	36	-21.55	21.55	35												ELEV.-49		
225	JOINT	37	0	0	35												ELEV.-49		
226	JOINT	38	25.05	25.05	0												ELEV.-84		
227	JOINT	39	25.05	0	0												ELEV.-84		
228	JOINT	40	25.05	-25.05	0												ELEV.-84		
229	JOINT	41	0	-25.05	0												ELEV.-84		
230	JOINT	42	-25.05	-25.05	0												ELEV.-84		
231	JOINT	43	-25.05	0	0												ELEV.-84		
232	JOINT	44	-25.05	25.05	0												ELEV.-84		
233	JOINT	45	0	25.05	0												ELEV.-84		
234	JOINT	46	0	0	0												ELEV.-84		
235	JOINT	47	0	0	130														
236	JOINT	51	17.45	17.45	96												WISHB+12		
237	JOINT	52	15.45	15.45	96.01												WISHB+12		
238	JOINT	53	17.45	-17.45	96												WISHB+12		
239	JOINT	54	15.45	-15.45	96.01												WISHB+12		
240	JOINT	55	-17.45	-17.45	96												WISHB+12		
241	JOINT	56	-15.45	-15.45	96.01												WISHB+12		
242	JOINT	57	-17.45	17.45	96												WISHB+12		
243	JOINT	58	-15.45	15.45	96.01												WISHB+12		
244	JOINT	59	20.45	20.45	66												WISHB-18		
245	JOINT	60	18.45	18.45	66.01												WISHB-18		

4-PILE ACSR STRUCTURE -- U.S. NAVY (36-IN. DIAMETER PILING) -- J.ATKINSON

```
                    1    1    2    2    3    3    4    4    5    5    6    6    7    7    8
LINE NO. 1...5....0....5....0....5....0....5....0....5....0....5....0....5....0....5....0

  246  JOINT   61   20.45 -20.45   66                                  WISHB-18
  247  JOINT   62   18.45 -18.45   66.01                               WISHB-18
  248  JOINT   63  -20.45 -20.45   66                                  WISHB-18
  249  JOINT   64  -18.45 -18.45   66.01                               WISHB-18
  250  JOINT   65  -20.45  20.45   66                                  WISHB-18
  251  JOINT   66  -18.45  18.45   66.01                               WISHB-18
  252  JOINT   67   23.55  23.55   35                                  WISHB-49
  253  JOINT   68   21.55  21.55   35.01                               WISHB-49
  254  JOINT   69   23.55 -23.55   35                                  WISHB-49
  255  JOINT   70   21.55 -21.55   35.01                               WISHB-49
  256  JOINT   71  -23.55 -23.55   35                                  WISHB-49
  257  JOINT   72  -21.55 -21.55   35.01                               WISHB-49
  258  JOINT   73  -23.55  23.55   35                                  WISHB-49
  259  JOINT   74  -21.55  21.55   35.01                               WISHB-49
  260  JOINT   75   27.05  27.05   0                                   WISHB-84
  261  JOINT   76   25.05  25.05   0.01                                WISHB-84
  262  JOINT   77   27.05 -27.05   0                                   WISHB-84
  263  JOINT   78   25.05 -25.05   0.01                                WISHB-84
  264  JOINT   79  -27.05 -27.05   0                                   WISHB-84
  265  JOINT   80  -25.05 -25.05   0.01                                WISHB-84
  266  JOINT   81  -27.05  27.05   0                                   WISHB-84
  267  JOINT   82  -25.05  25.05   0.01                                WISHB-84
  268  JOINT  103   25.88  25.88  -8.26                     111        SUPPORT3
  269  JOINT  104   25.88 -25.88  -8.26                     111        SUPPORT4
  270  JOINT  102  -25.88 -25.88  -8.26                     111        SUPPORT2
  271  JOINT  101  -25.88  25.88  -8.26                     111        SUPPORT1
  272  LOAD
  273  LOADCN   1
  274  LOAD Z    5    4    0.00  -.055  30.00  -.055                   GLOB UNIF     DL 0 1
  275  LOAD Z    6    3    0.00  -.040  30.00  -.040                   GLOB UNIF     DL 0 1
  276  LOAD Z    7    2    0.00  -.040  30.00  -.040                   GLOB UNIF     DL 0 1
  277  LOAD Z    8    1    0.00  -.055  30.00  -.055                   GLOB UNIF     DL 0 1
  278  LOAD Z    5    6    0.00  -.055  10.00  -.055                   GLOB UNIF     DL 0 1
  279  LOAD Z    6    7    0.00  -.055  10.00  -.055                   GLOB UNIF     DL 0 1
  280  LOAD Z    7    8    0.00  -.055  10.00  -.055                   GLOB UNIF     DL 0 1
  281  LOAD Z    4    3    0.00  -.055  10.00  -.055                   GLOB UNIF     DL 0 1
  282  LOAD Z    3    2    0.00  -.055  10.00  -.055                   GLOB UNIF     DL 0 1
  283  LOAD Z    2    1    0.00  -.055  10.00  -.055                   GLOB UNIF     DL 0 1
  284  LOAD Z   12    5    0.00  -.347  15.00  -.347                   GLOB UNIF     DL 0 1
  285  LOAD Z   11    4    0.00  -.347  15.00  -.347                   GLOB UNIF     DL 0 1
  286  LOAD Z   14    8    0.00  -.347  15.00  -.347                   GLOB UNIF     DL 0 1
  287  LOAD Z    9    1    0.00  -.347  15.00  -.347                   GLOB UNIF     DL 0 1
  288  LOAD Z   12   11    1.50  -.055  27.00  -.055                   GLOB UNIF     DL 0 1
  289  LOAD Z   13   10    1.50  -.055  27.00  -.055                   GLOB UNIF     DL 0 1
  290  LOAD Z   14    9    1.50  -.055  27.00  -.055                   GLOB UNIF     DL 0 1
  291  LOAD Z   12   15    1.50  -.055  12.00  -.055                   GLOB UNIF     DL 0 1
  292  LOAD Z   13   14    1.50  -.055  12.00  -.055                   GLOB UNIF     DL 0 1
  293  LOAD Z   11   10    1.50  -.055  12.00  -.055                   GLOB UNIF     DL 0 1
  294  LOAD Z   10    9    1.50  -.055  12.00  -.055                   GLOB UNIF     DL 0 1
```

4-PILE ACHA STRUCTURE -- U.S. NAVY (36-IN. DIAMETER PILING) -- J.ATKINSON

LINE NO.																	
			1	1	2	2	3	3	4	4	5	5	6	6	7	7	8
			1...5...0	...5...0	...5...0	...5...0	...5...0	...5...0	...5...0	...5...0	...5...0	...5...0	...5...0	...5...0	...5...0	...5...0	
295	LOAD	Z	17	12	0.00	-.347	14.00	-.347					GLOB	UNIF	DL	0	1
296	LOAD	Z	16	11	0.00	-.347	14.00	-.347					GLOB	UNIF	DL	0	1
297	LOAD	Z	18	14	0.00	-.347	14.00	-.347					GLOB	UNIF	DL	0	1
298	LOAD	Z	15	9	0.00	-.347	14.00	-.347					GLOB	UNIF	DL	0	1
299	LOAD	Z	17	11	1.25	-.055	30.61	-.055					GLOB	UNIF	DL	0	1
300	LOAD	Z	18	9	1.25	-.055	30.61	-.055					GLOB	UNIF	DL	0	1
301	LOAD	Z	17	14	1.25	-.055	30.61	-.055					GLOB	UNIF	DL	0	1
302	LOAD	Z	16	9	1.25	-.055	30.61	-.055					GLOB	UNIF	DL	0	1
303	LOAD	Z	17	16	1.25	-.055	27.50	-.055					GLOB	UNIF	DL	0	1
304	LOAD	Z	18	15	1.25	-.055	27.50	-.055					GLOB	UNIF	DL	0	1
305	LOAD	Z	17	18	1.25	-.055	27.50	-.055					GLOB	UNIF	DL	0	1
306	LOAD	Z	16	15	1.25	-.055	27.50	-.055					GLOB	UNIF	DL	0	1
307	LOAD	Z	21	17	0.00	-.302	23.00	-.302					GLOB	UNIF	DL	0	1
308	LOAD	Z	21	17	23.00	-.347	6.50	-.347					GLOB	UNIF	DL	0	1
309	LOAD	Z	20	16	0.00	-.302	23.00	-.302					GLOB	UNIF	DL	0	1
310	LOAD	Z	20	16	23.00	-.347	6.50	-.347					GLOB	UNIF	DL	0	1
311	LOAD	Z	22	18	0.00	-.302	23.00	-.302					GLOB	UNIF	DL	0	1
312	LOAD	Z	22	18	23.00	-.347	6.50	-.347					GLOB	UNIF	DL	0	1
313	LOAD	Z	19	15	0.00	-.302	23.00	-.302					GLOB	UNIF	DL	0	1
314	LOAD	Z	19	15	23.00	-.347	6.50	-.347					GLOB	UNIF	DL	0	1
315	LOAD	Z	25	21	0.00	-.183	4.54	-.183					GLOB	UNIF	DL	0	1
316	LOAD	Z	24	20	0.00	-.183	4.54	-.183					GLOB	UNIF	DL	0	1
317	LOAD	Z	26	22	0.00	-.183	4.54	-.183					GLOB	UNIF	DL	0	1
318	LOAD	Z	23	19	0.00	-.183	4.54	-.183					GLOB	UNIF	DL	0	1
319	LOAD	Z	25	24	1.50	-.063	27.90	-.063					GLOB	UNIF	DL	0	1
320	LOAD	Z	26	23	1.50	-.063	27.90	-.063					GLOB	UNIF	DL	0	1
321	LOAD	Z	25	26	1.50	-.063	27.90	-.063					GLOB	UNIF	DL	0	1
322	LOAD	Z	24	23	1.50	-.063	27.90	-.063					GLOB	UNIF	DL	0	1
323	LOAD	Z	25	27	1.00	-.072	19.85	-.072					GLOB	UNIF	DL	0	1
324	LOAD	Z	27	23	1.00	-.072	19.85	-.072					GLOB	UNIF	DL	0	1
325	LOAD	Z	26	27	1.00	-.072	19.85	-.072					GLOB	UNIF	DL	0	1
326	LOAD	Z	27	24	1.00	-.072	19.85	-.072					GLOB	UNIF	DL	0	1
327	LOAD	Z	30	25	0.00	-.183	30.30	-.183					GLOB	UNIF	DL	0	1
328	LOAD	Z	29	24	0.00	-.183	30.30	-.183					GLOB	UNIF	DL	0	1
329	LOAD	Z	31	26	0.00	-.183	30.30	-.183					GLOB	UNIF	DL	0	1
330	LOAD	Z	28	23	0.00	-.183	30.30	-.183					GLOB	UNIF	DL	0	1
331	LOAD	Z	29	25	1.50	-.112	42.37	-.112					GLOB	UNIF	DL	0	1
332	LOAD	Z	28	26	1.50	-.112	42.37	-.112					GLOB	UNIF	DL	0	1
333	LOAD	Z	31	25	1.50	-.112	42.37	-.112					GLOB	UNIF	DL	0	1
334	LOAD	Z	28	24	1.50	-.112	42.37	-.112					GLOB	UNIF	DL	0	1
335	LOAD	Z	30	29	1.50	-.063	33.90	-.063					GLOB	UNIF	DL	0	1
336	LOAD	Z	31	28	1.50	-.063	33.90	-.063					GLOB	UNIF	DL	0	1
337	LOAD	Z	30	31	1.50	-.063	33.90	-.063					GLOB	UNIF	DL	0	1
338	LOAD	Z	29	28	1.50	-.063	33.90	-.063					GLOB	UNIF	DL	0	1
339	LOAD	Z	30	32	1.15	-.081	23.79	-.081					GLOB	UNIF	DL	0	1
340	LOAD	Z	32	28	1.15	-.081	23.79	-.081					GLOB	UNIF	DL	0	1
341	LOAD	Z	31	32	1.15	-.081	23.79	-.081					GLOB	UNIF	DL	0	1
342	LOAD	Z	32	29	1.15	-.081	23.79	-.081					GLOB	UNIF	DL	0	1
343	LOAD	Z	35	30	0.00	-.183	31.31	-.183					GLOB	UNIF	DL	0	1

4-PILE ACMR STRUCTURE -- U.S. NAVY (36-IN. DIAMETER PILING) -- J.ATKINSON

LINE NO.																
344	LOAD	Z	34	29	0.00	-.183	31.31	-.183			GLOB	UNIF	DL	0	1
345	LOAD	Z	36	31	0.00	-.183	31.31	-.183			GLOB	UNIF	DL	0	1
346	LOAD	Z	33	28	0.00	-.183	31.31	-.183			GLOB	UNIF	DL	0	1
347	LOAD	Z	35	29	1.50	-.081	47.70	-.081			GLOB	UNIF	DL	0	1
348	LOAD	Z	36	28	1.50	-.081	47.70	-.081			GLOB	UNIF	DL	0	1
349	LOAD	Z	35	31	1.50	-.081	47.70	-.081			GLOB	UNIF	DL	0	1
350	LOAD	Z	34	28	1.50	-.081	47.70	-.081			GLOB	UNIF	DL	0	1
351	LOAD	Z	35	34	1.50	-.081	40.10	-.081			GLOB	UNIF	DL	0	1
352	LOAD	Z	36	33	1.50	-.081	40.10	-.081			GLOB	UNIF	DL	0	1
353	LOAD	Z	35	36	1.50	-.081	40.10	-.081			GLOB	UNIF	DL	0	1
354	LOAD	Z	34	33	1.50	-.081	40.10	-.081			GLOB	UNIF	DL	0	1
355	LOAD	Z	35	37	1.25	-.091	27.98	-.091			GLOB	UNIF	DL	0	1
356	LOAD	Z	37	33	1.25	-.091	27.98	-.091			GLOB	UNIF	DL	0	1
357	LOAD	Z	36	37	1.25	-.091	27.98	-.091			GLOB	UNIF	DL	0	1
358	LOAD	Z	37	34	1.25	-.091	27.98	-.091			GLOB	UNIF	DL	0	1
359	LOAD	Z	42	35	0.00	-.183	35.35	-.183			GLOB	UNIF	DL	0	1
360	LOAD	Z	40	34	0.00	-.183	35.35	-.183			GLOB	UNIF	DL	0	1
361	LOAD	Z	44	36	0.00	-.183	35.35	-.183			GLOB	UNIF	DL	0	1
362	LOAD	Z	38	33	0.00	-.183	35.35	-.183			GLOB	UNIF	DL	0	1
363	LOAD	Z	35	41	1.50	-.081	38.25	-.081			GLOB	UNIF	DL	0	1
364	LOAD	Z	41	34	1.50	-.081	38.25	-.081			GLOB	UNIF	DL	0	1
365	LOAD	Z	36	45	1.50	-.081	38.25	-.081			GLOB	UNIF	DL	0	1
366	LOAD	Z	45	33	1.50	-.081	38.25	-.081			GLOB	UNIF	DL	0	1
367	LOAD	Z	35	43	1.50	-.081	38.25	-.081			GLOB	UNIF	DL	0	1
368	LOAD	Z	43	36	1.50	-.081	38.25	-.081			GLOB	UNIF	DL	0	1
369	LOAD	Z	34	39	1.50	-.081	38.25	-.081			GLOB	UNIF	DL	0	1
370	LOAD	Z	39	33	1.50	-.081	38.25	-.081			GLOB	UNIF	DL	0	1
371	LOAD	Z	42	41	1.50	-.081	22.05	-.081			GLOB	UNIF	DL	0	1
372	LOAD	Z	41	40	1.50	-.081	22.05	-.081			GLOB	UNIF	DL	0	1
373	LOAD	Z	44	45	1.50	-.081	22.05	-.081			GLOB	UNIF	DL	0	1
374	LOAD	Z	45	38	1.50	-.081	22.05	-.081			GLOB	UNIF	DL	0	1
375	LOAD	Z	42	43	1.50	-.081	22.05	-.081			GLOB	UNIF	DL	0	1
376	LOAD	Z	43	44	1.50	-.081	22.05	-.081			GLOB	UNIF	DL	0	1
377	LOAD	Z	40	39	1.50	-.081	22.05	-.081			GLOB	UNIF	DL	0	1
378	LOAD	Z	39	38	1.50	-.081	22.05	-.081			GLOB	UNIF	DL	0	1
379	LOAD	Z	42	46	1.25	-.091	32.93	-.091			GLOB	UNIF	DL	0	1
380	LOAD	Z	46	38	1.25	-.091	32.93	-.091			GLOB	UNIF	DL	0	1
381	LOAD	Z	44	46	1.25	-.091	32.93	-.091			GLOB	UNIF	DL	0	1
382	LOAD	Z	46	40	1.25	-.091	32.93	-.091			GLOB	UNIF	DL	0	1
383	LOAD	Z	25	55	0.00	-.148	2.83	-.148			GLOB	UNIF	DL	0	1
384	LOAD	Z	55	56	0.00	-.148	2.83	-.148			GLOB	UNIF	DL	0	1
385	LOAD	Z	24	53	0.00	-.148	2.83	-.148			GLOB	UNIF	DL	0	1
386	LOAD	Z	53	54	0.00	-.148	2.83	-.148			GLOB	UNIF	DL	0	1
387	LOAD	Z	26	57	0.00	-.148	2.83	-.148			GLOB	UNIF	DL	0	1
388	LOAD	Z	57	58	0.00	-.148	2.83	-.148			GLOB	UNIF	DL	0	1
389	LOAD	Z	23	51	0.00	-.148	2.83	-.148			GLOB	UNIF	DL	0	1
390	LOAD	Z	51	52	0.00	-.148	2.83	-.148			GLOB	UNIF	DL	0	1
391	LOAD	Z	30	63	0.00	-.148	2.83	-.148			GLOB	UNIF	DL	0	1
392	LOAD	Z	63	64	0.00	-.148	2.83	-.148			GLOB	UNIF	DL	0	1

4-PILE ACMR STRUCTURE -- U.S. NAVY (36-IN. DIAMETER PILING) -- J.ATKINSON

```
                    1   1   2   2   3   3   4   4   5   5   6   6   7   7   8
LINE NO. 1...5....0....5....0....5....0....5....0....5....0....5....0....5....0....5....0

    393  LOAD Z  29  61   0.00  -.148   2.83  -.148                GLOB UNIF    DL 0 1
    394  LOAD Z  61  62   0.00  -.148   2.83  -.148                GLOB UNIF    DL 0 1
    395  LOAD Z  31  65   0.00  -.148   2.83  -.148                GLOB UNIF    DL 0 1
    396  LOAD Z  65  66   0.00  -.148   2.83  -.148                GLOB UNIF    DL 0 1
    397  LOAD Z  28  59   0.00  -.148   2.83  -.148                GLOB UNIF    DL 0 1
    398  LOAD Z  59  60   0.00  -.148   2.83  -.148                GLOB UNIF    DL 0 1
    399  LOAD Z  35  71   0.00  -.148   2.83  -.148                GLOB UNIF    DL 0 1
    400  LOAD Z  71  72   0.00  -.148   2.83  -.148                GLOB UNIF    DL 0 1
    401  LOAD Z  34  69   0.00  -.148   2.83  -.148                GLOB UNIF    DL 0 1
    402  LOAD Z  69  70   0.00  -.148   2.83  -.148                GLOB UNIF    DL 0 1
    403  LOAD Z  36  73   0.00  -.148   2.83  -.148                GLOB UNIF    DL 0 1
    404  LOAD Z  73  74   0.00  -.148   2.83  -.148                GLOB UNIF    DL 0 1
    405  LOAD Z  33  67   0.00  -.148   2.83  -.148                GLOB UNIF    DL 0 1
    406  LOAD Z  67  68   0.00  -.148   2.83  -.148                GLOB UNIF    DL 0 1
    407  LOAD Z  42  79   0.00  -.148   2.83  -.148                GLOB UNIF    DL 0 1
    408  LOAD Z  79  80   0.00  -.148   2.83  -.148                GLOB UNIF    DL 0 1
    409  LOAD Z  40  77   0.00  -.148   2.83  -.148                GLOB UNIF    DL 0 1
    410  LOAD Z  77  78   0.00  -.148   2.83  -.148                GLOB UNIF    DL 0 1
    411  LOAD Z  44  81   0.00  -.148   2.83  -.148                GLOB UNIF    DL 0 1
    412  LOAD Z  81  82   0.00  -.148   2.83  -.148                GLOB UNIF    DL 0 1
    413  LOAD Z  38  75   0.00  -.148   2.83  -.148                GLOB UNIF    DL 0 1
    414  LOAD Z  75  76   0.00  -.148   2.83  -.148                GLOB UNIF    DL 0 1
    415  LOAD Z  21  56   0.00  -.403   4.53  -.403                GLOB UNIF    DL 0 1
    416  LOAD Z  56  64   0.00  -.403  30.30  -.403                GLOB UNIF    DL 0 1
    417  LOAD Z  64  72   0.00  -.403  31.31  -.403                GLOB UNIF    DL 0 1
    418  LOAD Z  72  80   0.00  -.481  35.35  -.481                GLOB UNIF    DL 0 1
    419  LOAD Z  20  54   0.00  -.403   4.53  -.403                GLOB UNIF    DL 0 1
    420  LOAD Z  54  62   0.00  -.403  30.30  -.403                GLOB UNIF    DL 0 1
    421  LOAD Z  62  70   0.00  -.403  31.31  -.403                GLOB UNIF    DL 0 1
    422  LOAD Z  70  78   0.00  -.481  35.35  -.481                GLOB UNIF    DL 0 1
    423  LOAD Z  22  58   0.00  -.403   4.53  -.403                GLOB UNIF    DL 0 1
    424  LOAD Z  58  66   0.00  -.403  30.30  -.403                GLOB UNIF    DL 0 1
    425  LOAD Z  66  74   0.00  -.403  31.31  -.403                GLOB UNIF    DL 0 1
    426  LOAD Z  74  82   0.00  -.481  35.35  -.481                GLOB UNIF    DL 0 1
    427  LOAD Z  19  52   0.00  -.403   4.53  -.403                GLOB UNIF    DL 0 1
    428  LOAD Z  52  60   0.00  -.403  30.30  -.403                GLOB UNIF    DL 0 1
    429  LOAD Z  60  68   0.00  -.403  31.31  -.403                GLOB UNIF    DL 0 1
    430  LOAD Z  68  76   0.00  -.481  35.35  -.481                GLOB UNIF    DL 0 1
    431  LOAD Z  80 102   0.00  -.481  15.16  -.481                GLOB UNIF    DL 0 1
    432  LOAD Z  78 104   0.00  -.481  15.16  -.481                GLOB UNIF    DL 0 1
    433  LOAD Z  82 101   0.00  -.481  15.16  -.481                GLOB UNIF    DL 0 1
    434  LOAD Z  76 103   0.00  -.481  15.16  -.481                GLOB UNIF    DL 0 1
    435  LOAD X  21  56   0.00     115                             GLOB CONC    WN 1 1
    436  LOAD Y  21  56                          0.00 105503       GLOB MOMT    WN 1 1
    437  LOAD Y  21  56   0.00     115                             GLOB CONC    WN 1 1
    438  LOAD X  21  56                          0.00-105503       GLOB MOMT    WN 1 1
    439  LOAD X  20  54   0.00     115                             GLOB CONC    WN 1 1
    440  LOAD Y  20  54                          0.00 105503       GLOB MOMT    WN 1 1
    441  LOAD Y  20  54   0.00     115                             GLOB CONC    WN 1 1
```

4-PILE ACHR STRUCTURE -- U.S. NAVY (36-IN. DIAMETER PILING) -- J.ATKINSON

```
                                1   1   2   2   3   3   4   4   5   5   6   6   7   7   8
LINE NO. 1...5....0....5....0....5....0....5....0....5....0....5....0....5....0....5....0

    442  LOAD X   20  54                                0.00-105503 GLOB MOMT     WN 1 1
    443  LOAD X   22  58   0.00     115                             GLOB CONC     WN 1 1
    444  LOAD Y   22  58                                0.00 105503 GLOB MOMT     WN 1 1
    445  LOAD Y   22  58   0.00     115                             GLOB CONC     WN 1 1
    446  LOAD X   22  58                                0.00-105503 GLOB MOMT     WN 1 1
    447  LOAD X   19  52   0.00     115                             GLOB CONC     WN 1 1
    448  LOAD Y   19  52                                0.00 105503 GLOB MOMT     WN 1 1
    449  LOAD Y   19  52   0.00     115                             GLOB CONC     WN 1 1
    450  LOAD X   19  52                                0.00-105503 GLOB MOMT     WN 1 1
    451  LOAD X   21  56   0.00     431                             GLOB CONC     WN 2 1
    452  LOAD Y   21  56                                0.00 349092 GLOB MOMT     WN 2 1
    453  LOAD Y   21  56   0.00     431                             GLOB CONC     WN 2 1
    454  LOAD X   21  56                                0.00-349092 GLOB MOMT     WN 2 1
    455  LOAD X   20  54   0.00     431                             GLOB CONC     WN 2 1
    456  LOAD Y   20  54                                0.00 349092 GLOB MOMT     WN 2 1
    457  LOAD Y   20  54   0.00     431                             GLOB CONC     WN 2 1
    458  LOAD X   20  54                                0.00-349092 GLOB MOMT     WN 2 1
    459  LOAD X   22  58   0.00     431                             GLOB CONC     WN 2 1
    460  LOAD Y   22  58                                0.00 349092 GLOB MOMT     WN 2 1
    461  LOAD Y   22  58   0.00     431                             GLOB CONC     WN 2 1
    462  LOAD X   22  58                                0.00-349092 GLOB MOMT     WN 2 1
    463  LOAD X   19  52   0.00     431                             GLOB CONC     WN 2 1
    464  LOAD Y   19  52                                0.00 349092 GLOB MOMT     WN 2 1
    465  LOAD Y   19  52   0.00     431                             GLOB CONC     WN 2 1
    466  LOAD X   19  52                                0.00-349092 GLOB MOMT     WN 2 1
    467  LOAD X   21  56   0.00     115                             GLOB CONC     WN 3 1
    468  LOAD Y   21  56                                0.00 105503 GLOB MOMT     WN 3 1
    469  LOAD Y   21  56   0.00     115                             GLOB CONC     WN 3 1
    470  LOAD X   21  56                                0.00-105503 GLOB MOMT     WN 3 1
    471  LOAD X   20  54   0.00     115                             GLOB CONC     WN 3 1
    472  LOAD Y   20  54                                0.00 105503 GLOB MOMT     WN 3 1
    473  LOAD Y   20  54   0.00     115                             GLOB CONC     WN 3 1
    474  LOAD X   20  54                                0.00-105503 GLOB MOMT     WN 3 1
    475  LOAD X   22  58   0.00     115                             GLOB CONC     WN 3 1
    476  LOAD Y   22  58                                0.00 105503 GLOB MOMT     WN 3 1
    477  LOAD Y   22  58   0.00     115                             GLOB CONC     WN 3 1
    478  LOAD X   22  58                                0.00-105503 GLOB MOMT     WN 3 1
    479  LOAD X   19  52   0.00     115                             GLOB CONC     WN 3 1
    480  LOAD Y   19  52                                0.00 105503 GLOB MOMT     WN 3 1
    481  LOAD Y   19  52   0.00     115                             GLOB CONC     WN 3 1
    482  LOAD X   19  52                                0.00-105503 GLOB MOMT     WN 3 1
    483  LOAD X   21  56   0.00     431                             GLOB CONC     WN 4 1
    484  LOAD Y   21  56                                0.00 349092 GLOB MOMT     WN 4 1
    485  LOAD Y   21  56   0.00     431                             GLOB CONC     WN 4 1
    486  LOAD X   21  56                                0.00-349092 GLOB MOMT     WN 4 1
    487  LOAD X   20  54   0.00     431                             GLOB CONC     WN 4 1
    488  LOAD Y   20  54                                0.00 349092 GLOB MOMT     WN 4 1
    489  LOAD Y   20  54   0.00     431                             GLOB CONC     WN 4 1
    490  LOAD X   20  54                                0.00-349092 GLOB MOMT     WN 4 1
```

4-PILE ACMR STRUCTURE -- U.S. NAVY (36-IN. DIAMETER PILING) -- J.ATKINSON

```
                    1    1    2    2    3    3    4    4    5    5    6    6    7    7    8
LINE NO. 1...5....0....5....0....5....0....5....0....5....0....5....0....5....0....5....0

  491  LOAD X  22  58   0.00   431                                  GLOB CONC    WN 4 1
  492  LOAD Y  22  58                                0.00 349092 GLOB MOMT    WN 4 1
  493  LOAD Y  22  58   0.00   431                                  GLOB CONC    WN 4 1
  494  LOAD X  22  58                                0.00-349092 GLOB MOMT    WN 4 1
  495  LOAD X  19  52   0.00   431                                  GLOB CONC    WN 4 1
  496  LOAD Y  19  52                                0.00 349092 GLOB MOMT    WN 4 1
  497  LOAD Y  19  52   0.00   431                                  GLOB CONC    WN 4 1
  498  LOAD X  19  52                                0.00-349092 GLOB MOMT    WN 4 1
  499  LOAD X  17  12   0.00   110   2.97   118                    GLOB UNIF    WV 0 1
  500  LOAD Y  17  12   0.00   110   2.97   118                    GLOB UNIF    WV 0 1
  501  LOAD X  17  12   2.97   118   2.97   125                    GLOB UNIF    WV 0 1
  502  LOAD Y  17  12   2.97   118   2.97   125                    GLOB UNIF    WV 0 1
  503  LOAD X  17  12   5.95   125   2.97   135                    GLOB UNIF    WV 0 1
  504  LOAD Y  17  12   5.95   125   2.97   135                    GLOB UNIF    WV 0 1
  505  LOAD X  16  11   0.00   125   3.83   136                    GLOB UNIF    WV 0 1
  506  LOAD Y  16  11   0.00   125   3.83   136                    GLOB UNIF    WV 0 1
  507  LOAD X  16  11   3.83   136   3.83   148                    GLOB UNIF    WV 0 1
  508  LOAD Y  16  11   3.83   136   3.83   148                    GLOB UNIF    WV 0 1
  509  LOAD X  16  11   7.67   148   3.83   163                    GLOB UNIF    WV 0 1
  510  LOAD Y  16  11   7.67   148   3.83   163                    GLOB UNIF    WV 0 1
  511  LOAD X  18  14   0.00   125   3.83   136                    GLOB UNIF    WV 0 1
  512  LOAD Y  18  14   0.00   125   3.83   136                    GLOB UNIF    WV 0 1
  513  LOAD X  18  14   3.83   136   3.83   148                    GLOB UNIF    WV 0 1
  514  LOAD Y  18  14   3.83   136   3.83   148                    GLOB UNIF    WV 0 1
  515  LOAD X  18  14   7.67   148   3.83   163                    GLOB UNIF    WV 0 1
  516  LOAD Y  18  14   7.67   148   3.83   163                    GLOB UNIF    WV 0 1
  517  LOAD X  15   9   0.00   118   1.97   124                    GLOB UNIF    WV 0 1
  518  LOAD Y  15   9   0.00   118   1.97   124                    GLOB UNIF    WV 0 1
  519  LOAD X  15   9   1.97   124   1.97   130                    GLOB UNIF    WV 0 1
  520  LOAD Y  15   9   1.97   124   1.97   130                    GLOB UNIF    WV 0 1
  521  LOAD X  15   9   3.95   130   1.97   137                    GLOB UNIF    WV 0 1
  522  LOAD Y  15   9   3.95   130   1.97   137                    GLOB UNIF    WV 0 1
  523  LOAD X  17  11   0.00    09   6.46    10                    GLOB UNIF    WV 0 1
  524  LOAD Y  17  11   0.00    51   6.46    57                    GLOB UNIF    WV 0 1
  525  LOAD Z  17  11   0.00-   20   6.46-   22                    GLOB UNIF    WV 0 1
  526  LOAD X  17  11   6.46    10   6.46    11                    GLOB UNIF    WV 0 1
  527  LOAD Y  17  11   6.46    57   6.46    62                    GLOB UNIF    WV 0 1
  528  LOAD Z  17  11   6.46-   22   6.46-   24                    GLOB UNIF    WV 0 1
  529  LOAD X  17  11  12.93    11   6.46    12                    GLOB UNIF    WV 0 1
  530  LOAD Y  17  11  12.93    62   6.46    68                    GLOB UNIF    WV 0 1
  531  LOAD Z  17  11  12.93-   24   6.46-   26                    GLOB UNIF    WV 0 1
  532  LOAD X  17  11  19.39    12   6.46    13                    GLOB UNIF    WV 0 1
  533  LOAD Y  17  11  19.39    68   6.46    74                    GLOB UNIF    WV 0 1
  534  LOAD Z  17  11  19.39-   26   6.46-   28                    GLOB UNIF    WV 0 1
  535  LOAD X  18   9   0.00    10   6.48    11                    GLOB UNIF    WV 0 1
  536  LOAD Y  18   9   0.00    58   6.48    63                    GLOB UNIF    WV 0 1
  537  LOAD Z  18   9   0.00-   22   6.48-   24                    GLOB UNIF    WV 0 1
  538  LOAD X  18   9   6.48    11   6.48    12                    GLOB UNIF    WV 0 1
  539  LOAD Y  18   9   6.48    63   6.48    66                    GLOB UNIF    WV 0 1
```

4-PILE ACMR STRUCTURE -- U.S. NAVY (36-IN. DIAMETER PILING) -- J.ATKINSON

LINE NO.																	
540	LOAD Z	18	9	6.48-	24	6.48-	25					GLOB	UNIF	WV	0	1	
541	LOAD X	18	9	12.96	12	6.48	13					GLOB	UNIF	WV	0	1	
542	LOAD Y	18	9	12.96	66	6.48	70					GLOB	UNIF	WV	0	1	
543	LOAD Z	18	9	12.96-	25	6.48-	27					GLOB	UNIF	WV	0	1	
544	LOAD X	17	14	0.00	51	6.46	57					GLOB	UNIF	WV	0	1	
545	LOAD Y	17	14	0.00	09	6.46	10					GLOB	UNIF	WV	0	1	
546	LOAD Z	17	14	0.00-	20	6.46-	22					GLOB	UNIF	WV	0	1	
547	LOAD X	17	14	6.46	57	6.46	62					GLOB	UNIF	WV	0	1	
548	LOAD Y	17	14	6.46	10	6.46	11					GLOB	UNIF	WV	0	1	
549	LOAD Z	17	14	6.46-	22	6.46-	24					GLOB	UNIF	WV	0	1	
550	LOAD X	17	14	12.93	62	6.46	68					GLOB	UNIF	WV	0	1	
551	LOAD Y	17	14	12.93	11	6.46	12					GLOB	UNIF	WV	0	1	
552	LOAD Z	17	14	12.93-	24	6.46-	26					GLOB	UNIF	WV	0	1	
553	LOAD X	17	14	19.39	68	6.46	74					GLOB	UNIF	WV	0	1	
554	LOAD Y	17	14	19.39	12	6.46	13					GLOB	UNIF	WV	0	1	
555	LOAD Z	17	14	19.39-	26	6.46-	28					GLOB	UNIF	WV	0	1	
556	LOAD X	16	9	0.00	58	6.48	63					GLOB	UNIF	WV	0	1	
557	LOAD Y	16	9	0.00	10	6.48	11					GLOB	UNIF	WV	0	1	
558	LOAD Z	16	9	0.00-	22	6.48-	24					GLOB	UNIF	WV	0	1	
559	LOAD X	16	9	6.48	63	6.48	66					GLOB	UNIF	WV	0	1	
560	LOAD Y	16	9	6.48	11	6.48	12					GLOB	UNIF	WV	0	1	
561	LOAD Z	16	9	6.48-	24	6.48-	25					GLOB	UNIF	WV	0	1	
562	LOAD X	16	9	12.96	66	6.48	70					GLOB	UNIF	WV	0	1	
563	LOAD Y	16	9	12.96	12	6.48	13					GLOB	UNIF	WV	0	1	
564	LOAD Z	16	9	12.96-	25	6.48-	27					GLOB	UNIF	WV	0	1	
565	LOAD Y	17	16	0.00	51	10.00	55					GLOB	UNIF	WV	0	1	
566	LOAD Y	17	16	10.00	55	10.00	57					GLOB	UNIF	WV	0	1	
567	LOAD Y	17	16	20.00	57	10.00	58					GLOB	UNIF	WV	0	1	
568	LOAD Y	18	15	0.00	58	10.00	59					GLOB	UNIF	WV	0	1	
569	LOAD Y	18	15	10.00	59	10.00	57					GLOB	UNIF	WV	0	1	
570	LOAD Y	18	15	20.00	57	10.00	55					GLOB	UNIF	WV	0	1	
571	LOAD X	17	18	0.00	51	10.00	55					GLOB	UNIF	WV	0	1	
572	LOAD X	17	18	10.00	55	10.00	57					GLOB	UNIF	WV	0	1	
573	LOAD X	17	18	20.00	57	10.00	58					GLOB	UNIF	WV	0	1	
574	LOAD X	16	15	0.00	58	10.00	59					GLOB	UNIF	WV	0	1	
575	LOAD X	16	15	10.00	59	10.00	57					GLOB	UNIF	WV	0	1	
576	LOAD X	16	15	20.00	57	10.00	55					GLOB	UNIF	WV	0	1	
577	LOAD X	21	17	0.00	61	5.90	68					GLOB	UNIF	WV	0	1	
578	LOAD Y	21	17	0.00	61	5.90	68					GLOB	UNIF	WV	0	1	
579	LOAD X	21	17	5.90	68	5.90	76					GLOB	UNIF	WV	0	1	
580	LOAD Y	21	17	5.90	68	5.90	76					GLOB	UNIF	WV	0	1	
581	LOAD X	21	17	11.80	76	5.90	86					GLOB	UNIF	WV	0	1	
582	LOAD Y	21	17	11.80	76	5.90	86					GLOB	UNIF	WV	0	1	
583	LOAD X	21	17	17.70	86	5.90	97					GLOB	UNIF	WV	0	1	
584	LOAD Y	21	17	17.70	86	5.90	97					GLOB	UNIF	WV	0	1	
585	LOAD X	21	17	23.60	97	5.90	110					GLOB	UNIF	WV	0	1	
586	LOAD Y	21	17	23.60	7	5.90	110					GLOB	UNIF	WV	0	1	
587	LOAD X	20	16	0.00	65	5.90	76					GLOB	UNIF	WV	0	1	
588	LOAD Y	20	16	0.00	68	5.90	76					GLOB	UNIF	WV	0	1	

4-PILE ACRR STRUCTURE -- U.S. NAVY (36-IN. DIAMETER PILING) -- J.ATKINSON

LINE NO.	1	2	3	4	5	6	7	8
589	LOAD X	20 16	5.90	76	5.90	86	GLOB UNIF	WV 0 1
590	LOAD Y	20 16	5.90	76	5.90	86	GLOB UNIF	WV 0 1
591	LOAD X	20 16	11.80	86	5.90	97	GLOB UNIF	WV 0 1
592	LOAD Y	20 16	11.80	86	5.90	97	GLOB UNIF	WV 0 1
593	LOAD X	20 16	17.70	97	5.90	110	GLOB UNIF	WV 0 1
594	LOAD Y	20 16	17.70	97	5.90	110	GLOB UNIF	WV 0 1
595	LOAD X	20 16	23.60	110	5.90	125	GLOB UNIF	WV 0 1
596	LOAD Y	20 16	23.60	110	5.90	125	GLOB UNIF	WV 0 1
597	LOAD X	22 18	0.00	68	5.90	76	GLOB UNIF	WV 0 1
598	LOAD Y	22 18	0.00	68	5.90	76	GLOB UNIF	WV 0 1
599	LOAD X	22 18	5.90	76	5.90	86	GLOB UNIF	WV 0 1
600	LOAD Y	22 18	5.90	76	5.90	86	GLOB UNIF	WV 0 1
601	LOAD X	22 18	11.80	86	5.90	97	GLOB UNIF	WV 0 1
602	LOAD Y	22 18	11.80	86	5.90	97	GLOB UNIF	WV 0 1
603	LOAD X	22 18	17.70	97	5.90	110	GLOB UNIF	WV 0 1
604	LOAD Y	22 18	17.70	97	5.90	110	GLOB UNIF	WV 0 1
605	LOAD X	22 18	23.60	110	5.90	125	GLOB UNIF	WV 0 1
606	LOAD Y	22 18	23.60	110	5.90	125	GLOB UNIF	WV 0 1
607	LOAD X	19 15	0.00	68	5.90	75	GLOB UNIF	WV 0 1
608	LOAD Y	19 15	0.00	68	5.90	75	GLOB UNIF	WV 0 1
609	LOAD X	19 15	5.90	75	5.90	84	GLOB UNIF	WV 0 1
610	LOAD Y	19 15	5.90	75	5.90	84	GLOB UNIF	WV 0 1
611	LOAD X	19 15	11.80	84	5.90	94	GLOB UNIF	WV 0 1
612	LOAD Y	19 15	11.80	84	5.90	94	GLOB UNIF	WV 0 1
613	LOAD X	19 15	17.70	94	5.90	106	GLOB UNIF	WV 0 1
614	LOAD Y	19 15	17.70	94	5.90	106	GLOB UNIF	WV 0 1
615	LOAD X	19 15	23.60	106	5.90	118	GLOB UNIF	WV 0 1
616	LOAD Y	19 15	23.60	106	5.90	118	GLOB UNIF	WV 0 1
617	LOAD X	25 21	0.00	74	1.51	76	GLOB UNIF	WV 0 1
618	LOAD Y	25 21	0.00	74	1.51	76	GLOB UNIF	WV 0 1
619	LOAD Z	25 21	0.00-	15	1.51-	15	GLOB UNIF	WV 0 1
620	LOAD X	25 21	1.51	76	1.51	78	GLOB UNIF	WV 0 1
621	LOAD Y	25 21	1.51	76	1.51	78	GLOB UNIF	WV 0 1
622	LOAD Z	25 21	1.51-	15	1.51-	16	GLOB UNIF	WV 0 1
623	LOAD X	25 21	3.03	78	1.51	80	GLOB UNIF	WV 0 1
624	LOAD Y	25 21	3.03	78	1.51	80	GLOB UNIF	WV 0 1
625	LOAD Z	25 21	3.03-	16	1.51-	16	GLOB UNIF	WV 0 1
626	LOAD X	24 20	0.00	85	1.51	87	GLOB UNIF	WV 0 1
627	LOAD Y	24 20	0.00	85	1.51	87	GLOB UNIF	WV 0 1
628	LOAD X	24 20	1.51	87	1.51	89	GLOB UNIF	WV 0 1
629	LOAD Y	24 20	1.51	87	1.51	89	GLOB UNIF	WV 0 1
630	LOAD X	24 20	3.03	89	1.51	91	GLOB UNIF	WV 0 1
631	LOAD Y	24 20	3.03	89	1.51	91	GLOB UNIF	WV 0 1
632	LOAD X	26 22	0.00	85	1.51	87	GLOB UNIF	WV 0 1
633	LOAD Y	26 22	0.00	85	1.51	87	GLOB UNIF	WV 0 1
634	LOAD X	26 22	1.51	87	1.51	89	GLOB UNIF	WV 0 1
635	LOAD Y	26 22	1.51	87	1.51	89	GLOB UNIF	WV 0 1
636	LOAD X	26 22	3.03	89	1.51	91	GLOB UNIF	WV 0 1
637	LOAD Y	26 22	3.03	89	1.51	91	GLOB UNIF	WV 0 1

4-PILE ACMR STRUCTURE -- U.S. NAVY (36-IN. DIAMETER PILING) -- J.ATKINSON

LINE NO.											
638	LOAD X	23	19	0.00	82	1.51	85	GLOB	UNIF	WV	0 1
639	LOAD Y	23	19	0.00	82	1.51	85	GLOB	UNIF	WV	0 1
640	LOAD Z	23	19	0.00	16	1.51	17	GLOB	UNIF	WV	0 1
641	LOAD X	23	19	1.51	85	1.51	87	GLOB	UNIF	WV	0 1
642	LOAD Y	23	19	1.51	85	1.51	87	GLOB	UNIF	WV	0 1
643	LOAD Z	23	19	1.51	17	1.51	17	GLOB	UNIF	WV	0 1
644	LOAD X	23	19	3.03	87	1.51	89	GLOB	UNIF	WV	0 1
645	LOAD Y	23	19	3.03	87	1.51	89	GLOB	UNIF	WV	0 1
646	LOAD Z	23	19	3.03	17	1.51	18	GLOB	UNIF	WV	0 1
647	LOAD Y	25	24	0.00	26	10.30	28	GLOB	UNIF	WV	0 1
648	LOAD Y	25	24	10.30	26	10.30	29	GLOB	UNIF	WV	0 1
649	LOAD Y	25	24	20.60	29	10.30	30	GLOB	UNIF	WV	0 1
650	LOAD Y	26	23	0.00	30	10.30	30	GLOB	UNIF	WV	0 1
651	LOAD Y	26	23	10.30	30	10.30	30	GLOB	UNIF	WV	0 1
652	LOAD Y	26	23	20.60	30	10.30	29	GLOB	UNIF	WV	0 1
653	LOAD X	25	26	0.00	26	10.30	28	GLOB	UNIF	WV	0 1
654	LOAD X	25	26	10.30	28	10.30	29	GLOB	UNIF	WV	0 1
655	LOAD X	25	26	20.60	29	10.30	30	GLOB	UNIF	WV	0 1
656	LOAD X	24	23	0.00	30	10.30	30	GLOB	UNIF	WV	0 1
657	LOAD X	24	23	10.30	30	10.30	30	GLOB	UNIF	WV	0 1
658	LOAD X	24	23	20.60	30	10.30	29	GLOB	UNIF	WV	0 1
659	LOAD X	26	27	0.00	34	7.28	34	GLOB	UNIF	WV	0 1
660	LOAD Y	26	27	0.00	34	7.28	34	GLOB	UNIF	WV	0 1
661	LOAD X	26	27	7.28	34	7.28	34	GLOB	UNIF	WV	0 1
662	LOAD Y	26	27	7.28	34	7.28	34	GLOB	UNIF	WV	0 1
663	LOAD X	26	27	14.57	34	7.28	34	GLOB	UNIF	WV	0 1
664	LOAD Y	26	27	14.57	34	7.28	34	GLOB	UNIF	WV	0 1
665	LOAD X	27	24	0.00	34	7.28	34	GLOB	UNIF	WV	0 1
666	LOAD Y	27	24	0.00	34	7.28	34	GLOB	UNIF	WV	0 1
667	LOAD X	27	24	7.28	34	7.28	34	GLOB	UNIF	WV	0 1
668	LOAD Y	27	24	7.28	34	7.28	34	GLOB	UNIF	WV	0 1
669	LOAD X	27	24	14.57	34	7.28	34	GLOB	UNIF	WV	0 1
670	LOAD Y	27	24	14.57	34	7.28	34	GLOB	UNIF	WV	0 1
671	LOAD X	30	25	0.00	46	7.57	51	GLOB	UNIF	WV	0 1
672	LOAD Y	30	25	0.00	46	7.57	51	GLOB	UNIF	WV	0 1
673	LOAD Z	30	25	0.00-	09	7.57-	10	GLOB	UNIF	WV	0 1
674	LOAD X	30	25	7.57	51	7.57	57	GLOB	UNIF	WV	0 1
675	LOAD Y	30	25	7.57	51	7.57	57	GLOB	UNIF	WV	0 1
676	LOAD Z	30	25	7.57-	10	7.57-	11	GLOB	UNIF	WV	0 1
677	LOAD X	30	25	15.15	57	7.57	64	GLOB	UNIF	WV	0 1
678	LOAD Y	30	25	15.15	57	7.57	64	GLOB	UNIF	WV	0 1
679	LOAD Z	30	25	15.15-	11	7.57-	13	GLOB	UNIF	WV	0 1
680	LOAD X	30	25	22.72	64	7.57	74	GLOB	UNIF	WV	0 1
681	LOAD Y	30	25	22.72	64	7.57	74	GLOB	UNIF	WV	0 1
682	LOAD Z	30	25	22.72-	13	7.57-	15	GLOB	UNIF	WV	0 1
683	LOAD X	29	24	0.00	54	7.57	60	GLOB	UNIF	WV	0 1
684	LOAD Y	29	24	0.00	54	7.57	60	GLOB	UNIF	WV	0 1
685	LOAD X	29	24	7.57	60	7.57	66	GLOB	UNIF	WV	0 1
686	LOAD Y	29	24	7.57	60	7.57	66	GLOB	UNIF	WV	0 1

4-PILE ACMR STRUCTURE -- U.S. NAVY (36-IN. DIAMETER PILING) -- J.ATKINSON

LINE NO.																	
1...5....0		1	1	2	2	3	3	4	4	5	5	6	6	7	7	8	
687	LOAD X	29	24	15.15	56	7.57	74					GLOB	UNIF		WV	0	1
688	LOAD Y	29	24	15.15	66	7.57	74					GLOB	UNIF		WV	0	1
689	LOAD X	29	24	22.72	74	7.57	85					GLOB	UNIF		WV	0	1
690	LOAD Y	29	24	22.72	74	7.57	85					GLOB	UNIF		WV	0	1
691	LOAD X	31	26	0.00	54	7.57	60					GLOB	UNIF		WV	0	1
692	LOAD Y	31	26	0.00	54	7.57	60					GLOB	UNIF		WV	0	1
693	LOAD X	31	26	7.57	60	7.57	66					GLOB	UNIF		WV	0	1
694	LOAD Y	31	26	7.57	60	7.57	66					GLOB	UNIF		WV	0	1
695	LOAD X	31	26	15.15	66	7.57	74					GLOB	UNIF		WV	0	1
696	LOAD Y	31	26	15.15	66	7.57	74					GLOB	UNIF		WV	0	1
697	LOAD X	31	26	22.72	74	7.57	85					GLOB	UNIF		WV	0	1
698	LOAD Y	31	26	22.72	74	7.57	85					GLOB	UNIF		WV	0	1
699	LOAD X	28	23	0.00	54	7.57	59					GLOB	UNIF		WV	0	1
700	LOAD Y	28	23	0.00	54	7.57	59					GLOB	UNIF		WV	0	1
701	LOAD Z	28	23	0.00	11	7.57	12					GLOB	UNIF		WV	0	1
702	LOAD X	28	23	7.57	59	7.57	65					GLOB	UNIF		WV	0	1
703	LOAD Y	28	23	7.57	59	7.57	65					GLOB	UNIF		WV	0	1
704	LOAD Z	28	23	7.57	12	7.57	13					GLOB	UNIF		WV	0	1
705	LOAD X	28	23	15.15	65	7.57	73					GLOB	UNIF		WV	0	1
706	LOAD Y	28	23	15.15	65	7.57	73					GLOB	UNIF		WV	0	1
707	LOAD Z	28	23	15.15	13	7.57	14					GLOB	UNIF		WV	0	1
708	LOAD X	28	23	22.72	73	7.57	82					GLOB	UNIF		WV	0	1
709	LOAD Y	28	23	22.72	73	7.57	82					GLOB	UNIF		WV	0	1
710	LOAD Z	28	23	22.72	14	7.57	16					GLOB	UNIF		WV	0	1
711	LOAD X	29	25	0.00	13	15.12	15					GLOB	UNIF		WV	0	1
712	LOAD Y	29	25	0.00	28	15.12	31					GLOB	UNIF		WV	0	1
713	LOAD Z	29	25	0.00	12	15.12	13					GLOB	UNIF		WV	0	1
714	LOAD X	29	25	15.12	15	15.12	16					GLOB	UNIF		WV	0	1
715	LOAD Y	29	25	15.12	31	15.12	35					GLOB	UNIF		WV	0	1
716	LOAD Z	29	25	15.12	13	15.12	15					GLOB	UNIF		WV	0	1
717	LOAD X	29	25	30.24	16	15.12	18					GLOB	UNIF		WV	0	1
718	LOAD Y	29	25	30.24	35	15.12	39					GLOB	UNIF		WV	0	1
719	LOAD Z	29	25	30.24	15	15.12	17					GLOB	UNIF		WV	0	1
720	LOAD X	28	26	0.00	11	11.34	12					GLOB	UNIF		WV	0	1
721	LOAD Y	28	26	0.00	26	11.34	29					GLOB	UNIF		WV	0	1
722	LOAD Z	28	26	0.00	15	11.34	16					GLOB	UNIF		WV	0	1
723	LOAD X	28	26	11.34	12	11.34	13					GLOB	UNIF		WV	0	1
724	LOAD Y	28	26	11.34	29	11.34	32					GLOB	UNIF		WV	0	1
725	LOAD Z	28	26	11.34	16	11.34	18					GLOB	UNIF		WV	0	1
726	LOAD X	28	26	22.68	13	11.34	15					GLOB	UNIF		WV	0	1
727	LOAD Y	28	26	22.68	32	11.34	36					GLOB	UNIF		WV	0	1
728	LOAD Z	28	26	22.68	18	11.34	20					GLOB	UNIF		WV	0	1
729	LOAD X	28	26	34.03	15	11.34	17					GLOB	UNIF		WV	0	1
730	LOAD Y	28	26	34.03	36	11.34	40					GLOB	UNIF		WV	0	1
731	LOAD Z	28	26	34.03	20	11.34	23					GLOB	UNIF		WV	0	1
732	LOAD X	31	25	0.00	28	15.12	31					GLOB	UNIF		WV	0	1
733	LOAD Y	31	25	0.00	13	15.12	15					GLOB	UNIF		WV	0	1
734	LOAD Z	31	25	0.00	12	15.12	13					GLOB	UNIF		WV	0	1
735	LOAD X	31	25	15.12	31	15.12	35					GLOB	UNIF		WV	0	1

4-PILE ACMR STRUCTURE -- U.S. NAVY (36-IN. DIAMETER PILING) -- J.ATKINSON

```
                                1    1    2    2    3    3    4    4    5    5    6    6    7    7    8
LINE NO. 1...5....0....5....0....5....0....5....0....5....0....5....0....5....0....5....0
736  LOAD Y  31  25  15.12   15  15.12   16                    GLOB UNIF    WV 0 1
737  LOAD Z  31  25  15.12   13  15.12   15                    GLOB UNIF    WV 0 1
738  LOAD X  31  25  30.24   35  15.12   39                    GLOB UNIF    WV 0 1
739  LOAD Y  31  25  30.24   16  15.12   18                    GLOB UNIF    WV 0 1
740  LOAD Z  31  25  30.24   15  15.12   17                    GLOB UNIF    WV 0 1
741  LOAD X  28  24   0.00   26  11.34   29                    GLOB UNIF    WV 0 1
742  LOAD Y  28  24   0.00   11  11.34   12                    GLOB UNIF    WV 0 1
743  LOAD Z  28  24   0.00   15  11.34   16                    GLOB UNIF    WV 0 1
744  LOAD X  28  24  11.34   29  11.34   32                    GLOB UNIF    WV 0 1
745  LOAD Y  28  24  11.34   12  11.34   13                    GLOB UNIF    WV 0 1
746  LOAD Z  28  24  11.34   16  11.34   18                    GLOB UNIF    WV 0 1
747  LOAD X  28  24  22.68   32  11.34   36                    GLOB UNIF    WV 0 1
748  LOAD Y  28  24  22.68   13  11.34   15                    GLOB UNIF    WV 0 1
749  LOAD Z  28  24  22.68   18  11.34   20                    GLOB UNIF    WV 0 1
750  LOAD X  28  24  34.03   36  11.34   40                    GLOB UNIF    WV 0 1
751  LOAD Y  28  24  34.03   15  11.34   17                    GLOB UNIF    WV 0 1
752  LOAD Z  28  24  34.03   20  11.34   23                    GLOB UNIF    WV 0 1
753  LOAD Y  30  29   0.00   16  12.30   17                    GLOB UNIF    WV 0 1
754  LOAD Y  30  29  12.30   17  12.30   18                    GLOB UNIF    WV 0 1
755  LOAD Y  30  29  24.60   18  12.30   19                    GLOB UNIF    WV 0 1
756  LOAD Y  31  28   0.00   19  12.30   19                    GLOB UNIF    WV 0 1
757  LOAD Y  31  28  12.30   19  12.30   19                    GLOB UNIF    WV 0 1
758  LOAD Y  31  28  24.60   19  12.30   19                    GLOB UNIF    WV 0 1
759  LOAD X  30  31   0.00   16  12.30   17                    GLOB UNIF    WV 0 1
760  LOAD X  30  31  12.30   17  12.30   18                    GLOB UNIF    WV 0 1
761  LOAD X  30  31  24.60   18  12.30   19                    GLOB UNIF    WV 0 1
762  LOAD X  29  28   0.00   19  12.30   19                    GLOB UNIF    WV 0 1
763  LOAD X  29  28  12.30   19  12.30   19                    GLOB UNIF    WV 0 1
764  LOAD X  29  28  24.60   19  12.30   19                    GLOB UNIF    WV 0 1
765  LOAD X  31  32   0.00   24   8.70   24                    GLOB UNIF    WV 0 1
766  LOAD Y  31  32   0.00   24   8.70   24                    GLOB UNIF    WV 0 1
767  LOAD X  31  32   8.70   24   8.70   24                    GLOB UNIF    WV 0 1
768  LOAD Y  31  32   8.70   24   8.70   24                    GLOB UNIF    WV 0 1
769  LOAD X  31  32  17.39   24   8.70   24                    GLOB UNIF    WV 0 1
770  LOAD Y  31  32  17.39   24   8.70   24                    GLOB UNIF    WV 0 1
771  LOAD X  32  29   0.00   24   8.70   24                    GLOB UNIF    WV 0 1
772  LOAD Y  32  29   0.00   24   8.70   24                    GLOB UNIF    WV 0 1
773  LOAD X  32  29   8.70   24   8.70   24                    GLOB UNIF    WV 0 1
774  LOAD Y  32  29   8.70   24   8.70   24                    GLOB UNIF    WV 0 1
775  LOAD X  32  29  17.39   24   8.70   24                    GLOB UNIF    WV 0 1
776  LOAD Y  32  29  17.39   24   8.70   24                    GLOB UNIF    WV 0 1
777  LOAD X  35  30   0.00   33  10.44   37                    GLOB UNIF    WV 0 1
778  LOAD Y  35  30   0.00   33  10.44   37                    GLOB UNIF    WV 0 1
779  LOAD Z  35  30   0.00-  07  10.44-  07                    GLOB UNIF    WV 0 1
780  LOAD X  35  30  10.44   37  10.44   41                    GLOB UNIF    WV 0 1
781  LOAD Y  35  30  10.44   37  10.44   41                    GLOB UNIF    WV 0 1
782  LOAD Z  35  30  10.44-  07  10.44-  08                    GLOB UNIF    WV 0 1
783  LOAD X  35  30  20.87   41  10.44   46                    GLOB UNIF    WV 0 1
784  LOAD Y  35  30  20.87   41  10.44   46                    GLOB UNIF    WV 0 1
```

4-PILE ACMR STRUCTURE -- U.S. NAVY (36-IN. DIAMETER PILING) -- J.ATKINSON

```
                                1    1    2    2    3    3    4    4    5    5    6    6    7    7    8
LINE NO. 1....5....0....5....0....5....0....5....0....5....0....5....0....5....0....5....0
  765  LOAD Z  35  30  20.87-  08  10.44-  05                    GLOB UNIF    WV 0 1
  786  LOAD X  34  29   0.00   41  10.44   44                    GLOB UNIF    WV 0 1
  787  LOAD Y  34  29   0.00   41  10.44   44                    GLOB UNIF    WV 0 1
  788  LOAD X  34  29  10.44   44  10.44   42                    GLOB UNIF    WV 0 1
  789  LOAD Y  34  29  10.44   44  10.44   49                    GLOB UNIF    WV 0 1
  790  LOAD X  34  29  20.87   59  10.44   54                    GLOB UNIF    WV 0 1
  791  LOAD Y  34  29  20.87   47  10.44   54                    GLOB UNIF    WV 0 1
  792  LOAD X  36  31   0.00   41  10.44   44                    GLOB UNIF    WV 0 1
  793  LOAD Y  36  31   0.00   41  10.44   44                    GLOB UNIF    WV 0 1
  794  LOAD X  36  31  10.44   44  10.44   49                    GLOB UNIF    WV 0 1
  795  LOAD Y  36  31  10.44   44  10.44   49                    GLOB UNIF    WV 0 1
  796  LOAD X  36  31  20.87   49  10.44   54                    GLOB UNIF    WV 0 1
  797  LOAD Y  36  31  20.87   49  10.44   54                    GLOB UNIF    WV 0 1
  798  LOAD X  33  28   0.00   48  10.44   44                    GLOB UNIF    WV 0 1
  799  LOAD Y  33  28   0.00   48  10.44   44                    GLOB UNIF    WV 0 1
  800  LOAD Z  33  28   0.00   08  10.44   09                    GLOB UNIF    WV 0 1
  801  LOAD X  33  28  10.44   44  10.44   48                    GLOB UNIF    WV 0 1
  802  LOAD Y  33  28  10.44   44  10.44   48                    GLOB UNIF    WV 0 1
  803  LOAD Z  33  28  10.44   09  10.44   10                    GLOB UNIF    WV 0 1
  804  LOAD X  33  28  20.87   48  10.44   54                    GLOB UNIF    WV 0 1
  805  LOAD Y  33  28  20.87   48  10.44   54                    GLOB UNIF    WV 0 1
  806  LOAD Z  33  28  20.87   10  10.44   11                    GLOB UNIF    WV 0 1
  807  LOAD X  35  29   0.00   05  12.68   06                    GLOB UNIF    WV 0 1
  808  LOAD Y  35  29   0.00   15  12.68   16                    GLOB UNIF    WV 0 1
  809  LOAD Z  35  29   0.00-  08  12.68-  09                    GLOB UNIF    WV 0 1
  810  LOAD X  35  29  12.68   06  12.68   06                    GLOB UNIF    WV 0 1
  811  LOAD Y  35  29  12.68   16  12.68   18                    GLOB UNIF    WV 0 1
  812  LOAD Z  35  29  12.68-  09  12.68-  10                    GLOB UNIF    WV 0 1
  813  LOAD X  35  29  25.35   06  12.68   07                    GLOB UNIF    WV 0 1
  814  LOAD Y  35  29  25.35   18  12.68   20                    GLOB UNIF    WV 0 1
  815  LOAD Z  35  29  25.35-  10  12.68-  11                    GLOB UNIF    WV 0 1
  816  LOAD X  35  29  38.03   07  12.68   08                    GLOB UNIF    WV 0 1
  817  LOAD Y  35  29  38.03   20  12.68   23                    GLOB UNIF    WV 0 1
  818  LOAD Z  35  29  38.03-  11  12.68-  13                    GLOB UNIF    WV 0 1
  819  LOAD X  36  28   0.00   08  16.90   09                    GLOB UNIF    WV 0 1
  820  LOAD Y  36  28   0.00   19  16.90   21                    GLOB UNIF    WV 0 1
  821  LOAD Z  36  28   0.00-  08  16.90-  09                    GLOB UNIF    WV 0 1
  822  LOAD X  36  28  16.90   09  16.90   09                    GLOB UNIF    WV 0 1
  823  LOAD Y  36  28  16.90   21  16.90   23                    GLOB UNIF    WV 0 1
  824  LOAD Z  36  28  16.90-  09  16.90-  10                    GLOB UNIF    WV 0 1
  825  LOAD X  36  28  33.80   09  16.90   10                    GLOB UNIF    WV 0 1
  826  LOAD Y  36  28  33.80   23  16.90   26                    GLOB UNIF    WV 0 1
  827  LOAD Z  36  28  33.80-  10  16.90-  11                    GLOB UNIF    WV 0 1
  828  LOAD X  35  31   0.00   15  12.68   16                    GLOB UNIF    WV 0 1
  829  LOAD Y  35  31   0.00   05  12.68   06                    GLOB UNIF    WV 0 1
  830  LOAD Z  35  31   0.00-  08  12.68-  09                    GLOB UNIF    WV 0 1
  831  LOAD X  35  31  12.68   16  12.68   18                    GLOB UNIF    WV 0 1
  832  LOAD Y  35  31  12.68   06  12.68   06                    GLOB UNIF    WV 0 1
  833  LOAD Z  35  31  12.68-  09  12.68-  10                    GLOB UNIF    WV 0 1
```

4-PILE ACMR STRUCTURE -- U.S. NAVY (36-IN. DIAMETER PILING) -- J.ATKINSON

```
                    1    1    2    2    3    3    4    4    5    5    6    6    7    7    8
LINE NO. 1...5....0....5....0....5....0....5....0....5....0....5....0....5....0....5....0

  834  LOAD X   35   31   25.35    18   12.68    20                GLOB UNIF    WV 0 1
  835  LOAD Y   35   31   25.35    06   12.68    07                GLOB UNIF    WV 0 1
  836  LOAD Z   35   31   25.35-   10   12.68-   11                GLOB UNIF    WV 0 1
  837  LOAD X   35   31   38.03    20   12.68    23                GLOB UNIF    WV 0 1
  838  LOAD Y   35   31   38.03    07   12.68    08                GLOB UNIF    WV 0 1
  839  LOAD Z   35   31   38.03-   11   12.68-   13                GLOB UNIF    WV 0 1
  840  LOAD X   34   28    0.00    19   16.90    21                GLOB UNIF    WV 0 1
  841  LOAD Y   34   28    0.00    08   16.90    09                GLOB UNIF    WV 0 1
  842  LOAD Z   34   28    0.00-   08   16.90-   09                GLOB UNIF    WV 0 1
  843  LOAD X   34   28   16.90    21   16.90    23                GLOB UNIF    WV 0 1
  844  LOAD Y   34   28   16.90    09   16.90    09                GLOB UNIF    WV 0 1
  845  LOAD Z   34   28   16.90-   09   16.90-   10                GLOB UNIF    WV 0 1
  846  LOAD X   34   28   33.80    23   16.90    26                GLOB UNIF    WV 0 1
  847  LOAD Y   34   28   33.80    09   16.90    10                GLOB UNIF    WV 0 1
  848  LOAD Z   34   28   33.80-   10   16.90-   11                GLOB UNIF    WV 0 1
  849  LOAD Y   35   34    0.00    15   14.37    17                GLOB UNIF    WV 0 1
  850  LOAD Y   35   34   14.37    17   14.37    18                GLOB UNIF    WV 0 1
  851  LOAD Y   35   34   28.73    18   14.37    18                GLOB UNIF    WV 0 1
  852  LOAD Y   36   33    0.00    18   14.37    19                GLOB UNIF    WV 0 1
  853  LOAD Y   36   33   14.37    19   14.37    19                GLOB UNIF    WV 0 1
  854  LOAD Y   36   33   28.73    19   14.37    18                GLOB UNIF    WV 0 1
  855  LOAD X   35   36    0.00    15   14.37    17                GLOB UNIF    WV 0 1
  856  LOAD X   35   36   14.37    17   14.37    18                GLOB UNIF    WV 0 1
  857  LOAD X   35   36   28.73    18   14.37    18                GLOB UNIF    WV 0 1
  858  LOAD X   34   33    0.00    18   14.37    19                GLOB UNIF    WV 0 1
  859  LOAD X   34   33   14.37    19   14.37    19                GLOB UNIF    WV 0 1
  860  LOAD X   34   33   28.73    19   14.37    18                GLOB UNIF    WV 0 1
  861  LOAD X   36   37    0.00    20   10.16    20                GLOB UNIF    WV 0 1
  862  LOAD Y   36   37    0.00    20   10.16    20                GLOB UNIF    WV 0 1
  863  LOAD X   36   37   10.16    20   10.16    20                GLOB UNIF    WV 0 1
  864  LOAD Y   36   37   10.16    20   10.16    20                GLOB UNIF    WV 0 1
  865  LOAD X   36   37   20.32    20   10.16    20                GLOB UNIF    WV 0 1
  866  LOAD Y   36   37   20.32    20   10.16    20                GLOB UNIF    WV 0 1
  867  LOAD X   37   34    0.00    20   10.16    20                GLOB UNIF    WV 0 1
  868  LOAD Y   37   34    0.00    20   10.16    20                GLOB UNIF    WV 0 1
  869  LOAD X   37   34   10.16    20   10.16    20                GLOB UNIF    WV 0 1
  870  LOAD Y   37   34   10.16    20   10.16    20                GLOB UNIF    WV 0 1
  871  LOAD X   37   34   20.32    20   10.16    20                GLOB UNIF    WV 0 1
  872  LOAD Y   37   34   20.32    20   10.16    20                GLOB UNIF    WV 0 1
  873  LOAD X   42   35    0.00    29   11.78    30                GLOB UNIF    WV 0 1
  874  LOAD Y   42   35    0.00    29   11.78    30                GLOB UNIF    WV 0 1
  875  LOAD Z   42   35    0.00-   06   11.78-   06                GLOB UNIF    WV 0 1
  876  LOAD X   42   35   11.78    30   11.78    31                GLOB UNIF    WV 0 1
  877  LOAD Y   42   35   11.78    30   11.78    31                GLOB UNIF    WV 0 1
  878  LOAD Z   42   35   11.78-   06   11.78-   06                GLOB UNIF    WV 0 1
  879  LOAD X   42   35   23.57    31   11.78    33                GLOB UNIF    WV 0 1
  880  LOAD Y   42   35   23.57    31   11.78    33                GLOB UNIF    WV 0 1
  881  LOAD Z   42   35   23.57-   06   11.78-   07                GLOB UNIF    WV 0 1
  882  LOAD X   40   34    0.00    36   11.78    37                GLOB UNIF    WV 0 1
```

4-PILE ACHR STRUCTURE -- U.S. NAVY (36-IN. DIAMETER PILING) -- J.ATKINSON

LINE NO.	1...5	1	1	2	2	3	3	4	4	5	5	6	6	7	7	8
	883	LOAD Y	40	34	0.00	36	11.78	37				GLOB	UNIF	WV	0	1
	884	LOAD X	40	34	11.78	37	11.78	38				GLOB	UNIF	WV	0	1
	885	LOAD Y	40	34	11.78	37	11.78	38				GLOB	UNIF	WV	0	1
	886	LOAD X	40	34	23.57	38	11.78	41				GLOB	UNIF	WV	0	1
	887	LOAD Y	40	34	23.57	38	11.78	41				GLOB	UNIF	WV	0	1
	888	LOAD X	44	36	0.00	36	11.78	37				GLOB	UNIF	WV	0	1
	889	LOAD Y	44	36	0.00	36	11.78	37				GLOB	UNIF	WV	0	1
	890	LOAD X	44	36	11.78	37	11.78	38				GLOB	UNIF	WV	0	1
	891	LOAD Y	44	36	11.78	37	11.78	38				GLOB	UNIF	WV	0	1
	892	LOAD X	44	36	23.57	38	11.78	41				GLOB	UNIF	WV	0	1
	893	LOAD Y	44	36	23.57	38	11.78	41				GLOB	UNIF	WV	0	1
	894	LOAD X	38	33	0.00	35	11.78	36				GLOB	UNIF	WV	0	1
	895	LOAD Y	38	33	0.00	35	11.78	36				GLOB	UNIF	WV	0	1
	896	LOAD Z	38	33	0.00	07	11.78	07				GLOB	UNIF	WV	0	1
	897	LOAD X	38	33	11.78	36	11.78	38				GLOB	UNIF	WV	0	1
	898	LOAD Y	38	33	11.78	36	11.78	38				GLOB	UNIF	WV	0	1
	899	LOAD Z	38	33	11.78	07	11.78	08				GLOB	UNIF	WV	0	1
	900	LOAD X	38	33	23.57	38	11.78	40				GLOB	UNIF	WV	0	1
	901	LOAD Y	38	33	23.57	38	11.78	40				GLOB	UNIF	WV	0	1
	902	LOAD Z	38	33	23.57	08	11.78	08				GLOB	UNIF	WV	0	1
	903	LOAD X	35	41	0.00	12	13.75	12				GLOB	UNIF	WV	0	1
	904	LOAD Y	35	41	0.00	16	13.75	15				GLOB	UNIF	WV	0	1
	905	LOAD Z	35	41	0.00	06	13.75	06				GLOB	UNIF	WV	0	1
	906	LOAD X	35	41	13.75	12	13.75	11				GLOB	UNIF	WV	0	1
	907	LOAD Y	35	41	13.75	15	13.75	15				GLOB	UNIF	WV	0	1
	908	LOAD Z	35	41	13.75	06	13.75	05				GLOB	UNIF	WV	0	1
	909	LOAD X	35	41	27.50	11	13.75	11				GLOB	UNIF	WV	0	1
	910	LOAD Y	35	41	27.50	15	13.75	15				GLOB	UNIF	WV	0	1
	911	LOAD Z	35	41	27.50	05	13.75	05				GLOB	UNIF	WV	0	1
	912	LOAD X	41	34	0.00	10	13.75	11				GLOB	UNIF	WV	0	1
	913	LOAD Y	41	34	0.00	14	13.75	15				GLOB	UNIF	WV	0	1
	914	LOAD Z	41	34	0.00-	08	13.75-	08				GLOB	UNIF	WV	0	1
	915	LOAD X	41	34	13.75	11	13.75	11				GLOB	UNIF	WV	0	1
	916	LOAD Y	41	34	13.75	15	13.75	16				GLOB	UNIF	WV	0	1
	917	LOAD Z	41	34	13.75-	08	13.75-	09				GLOB	UNIF	WV	0	1
	918	LOAD X	41	34	27.50	11	13.75	13				GLOB	UNIF	WV	0	1
	919	LOAD Y	41	34	27.50	16	13.75	17				GLOB	UNIF	WV	0	1
	920	LOAD Z	41	34	27.50-	09	13.75-	09				GLOB	UNIF	WV	0	1
	921	LOAD X	36	45	0.00	13	13.75	12				GLOB	UNIF	WV	0	1
	922	LOAD Y	36	45	0.00	17	13.75	16				GLOB	UNIF	WV	0	1
	923	LOAD Z	36	45	0.00	09	13.75	09				GLOB	UNIF	WV	0	1
	924	LOAD X	36	45	13.75	12	13.75	11				GLOB	UNIF	WV	0	1
	925	LOAD Y	36	45	13.75	16	13.75	16				GLOB	UNIF	WV	0	1
	926	LOAD Z	36	45	13.75	09	13.75	09				GLOB	UNIF	WV	0	1
	927	LOAD X	36	45	27.50	11	13.75	11				GLOB	UNIF	WV	0	1
	928	LOAD Y	36	45	27.50	16	13.75	16				GLOB	UNIF	WV	0	1
	929	LOAD Z	36	45	27.50	09	13.75	08				GLOB	UNIF	WV	0	1
	930	LOAD X	45	33	0.00	13	13.75	13				GLOB	UNIF	WV	0	1
	931	LOAD Y	45	33	0.00	17	13.75	18				GLOB	UNIF	WV	0	1

4-PILE ACHR STRUCTURE -- U.S. NAVY (36-IN. DIAMETER PILING) -- J.ATKINSON

```
                    1    1    2    2    3    3    4    5    5    6    6    7    7    8
LINE NO. 1...5....0....5....0....5....0....5....0....5....0....5....0....5....0....5....0

932  LOAD Z  45  33   0.00-  06  13.75-  06                GLOB UNIF    WV 0 1
933  LOAD X  45  33  13.75   13  13.75   13                GLOB UNIF    WV 0 1
934  LOAD Y  45  33  13.75   18  13.75   18                GLOB UNIF    WV 0 1
935  LOAD Z  45  33  13.75-  06  13.75-  06                GLOB UNIF    WV 0 1
936  LOAD X  45  33  27.50   13  13.75   14                GLOB UNIF    WV 0 1
937  LOAD Y  45  33  27.50   18  13.75   19                GLOB UNIF    WV 0 1
938  LOAD Z  45  33  27.50-  06  13.75-  07                GLOB UNIF    WV 0 1
939  LOAD X  35  43   0.00   16  13.75   15                GLOB UNIF    WV 0 1
940  LOAD Y  35  43   0.00   12  13.75   12                GLOB UNIF    WV 0 1
941  LOAD Z  35  43   0.00   06  13.75   06                GLOB UNIF    WV 0 1
942  LOAD X  35  43  13.75   15  13.75   15                GLOB UNIF    WV 0 1
943  LOAD Y  35  43  13.75   12  13.75   11                GLOB UNIF    WV 0 1
944  LOAD Z  35  43  13.75   06  13.75   05                GLOB UNIF    WV 0 1
945  LOAD X  35  43  27.50   15  13.75   15                GLOB UNIF    WV 0 1
946  LOAD Y  35  43  27.50   11  13.75   11                GLOB UNIF    WV 0 1
947  LOAD Z  35  43  27.50   05  13.75   05                GLOB UNIF    WV 0 1
948  LOAD X  43  36   0.00   14  13.75   15                GLOB UNIF    WV 0 1
949  LOAD Y  43  36   0.00   10  13.75   11                GLOB UNIF    WV 0 1
950  LOAD Z  43  36   0.00-  08  13.75-  08                GLOB UNIF    WV 0 1
951  LOAD X  43  36  13.75   15  13.75   16                GLOB UNIF    WV 0 1
952  LOAD Y  43  36  13.75   11  13.75   11                GLOB UNIF    WV 0 1
953  LOAD Z  43  36  13.75-  08  13.75-  09                GLOB UNIF    WV 0 1
954  LOAD X  43  36  27.50   16  13.75   17                GLOB UNIF    WV 0 1
955  LOAD Y  43  36  27.50   11  13.75   13                GLOB UNIF    WV 0 1
956  LOAD Z  43  36  27.50-  09  13.75-  09                GLOB UNIF    WV 0 1
957  LOAD X  34  39   0.00   17  13.75   16                GLOB UNIF    WV 0 1
958  LOAD Y  34  39   0.00   13  13.75   12                GLOB UNIF    WV 0 1
959  LOAD Z  34  39   0.00   09  13.75   09                GLOB UNIF    WV 0 1
960  LOAD X  34  39  13.75   16  13.75   16                GLOB UNIF    WV 0 1
961  LOAD Y  34  39  13.75   12  13.75   11                GLOB UNIF    WV 0 1
962  LOAD Z  34  39  13.75   09  13.75   09                GLOB UNIF    WV 0 1
963  LOAD X  34  39  27.50   16  13.75   16                GLOB UNIF    WV 0 1
964  LOAD Y  34  39  27.50   11  13.75   11                GLOB UNIF    WV 0 1
965  LOAD Z  34  39  27.50   09  13.75   08                GLOB UNIF    WV 0 1
966  LOAD X  39  33   0.00   17  13.75   18                GLOB UNIF    WV 0 1
967  LOAD Y  39  33   0.00   13  13.75   13                GLOB UNIF    WV 0 1
968  LOAD Z  39  33   0.00-  06  13.75-  06                GLOB UNIF    WV 0 1
969  LOAD X  39  33  13.75   18  13.75   18                GLOB UNIF    WV 0 1
970  LOAD Y  39  33  13.75   13  13.75   13                GLOB UNIF    WV 0 1
971  LOAD Z  39  33  13.75-  06  13.75-  06                GLOB UNIF    WV 0 1
972  LOAD X  39  33  27.50   18  13.75   19                GLOB UNIF    WV 0 1
973  LOAD Y  39  33  27.50   13  13.75   14                GLOB UNIF    WV 0 1
974  LOAD Z  39  33  27.50-  06  13.75-  07                GLOB UNIF    WV 0 1
975  LOAD Y  42  41   0.00   13   8.35   14                GLOB UNIF    WV 0 1
976  LOAD Y  42  41   8.35   14   8.35   14                GLOB UNIF    WV 0 1
977  LOAD Y  42  41  16.70   14   8.35   15                GLOB UNIF    WV 0 1
978  LOAD Y  41  40   0.00   15   8.35   15                GLOB UNIF    WV 0 1
979  LOAD Y  41  40   8.35   15   8.35   16                GLOB UNIF    WV 0 1
980  LOAD Y  41  40  16.70   16   8.35   16                GLOB UNIF    WV 0 1
```

4-PILE ACHR STRUCTURE -- U.S. NAVY (36-IN. DIAMETER PILING) -- J.ATKINSON

```
                                1   1   2   2   3   3   4   4   5   5   6   6   7   7   8
LINE NO. 1...5....0....5....0....5....0....5....0....5....0....5....0....5....0....5....0

     981 LOAD Y   44  45   0.00      16   8.35      16                GLOB UNIF     WV 0 1
     982 LOAD Y   44  45   8.35      16   8.35      16                GLOB UNIF     WV 0 1
     983 LOAD Y   44  45  16.70      16   8.35      16                GLOB UNIF     WV 0 1
     984 LOAD Y   45  48   0.00      16   8.35      16                GLOB UNIF     WV 0 1
     985 LOAD Y   45  48   8.35      16   8.35      16                GLOB UNIF     WV 0 1
     986 LOAD Y   45  48  16.70      16   8.35      16                GLOB UNIF     WV 0 1
     987 LOAD X   42  43   0.00      13   8.35      14                GLOB UNIF     WV 0 1
     988 LOAD X   42  43   8.35      14   8.35      14                GLOB UNIF     WV 0 1
     989 LOAD X   42  43  16.70      14   8.35      15                GLOB UNIF     WV 0 1
     990 LOAD X   43  44   0.00      15   8.35      15                GLOB UNIF     WV 0 1
     991 LOAD X   43  44   8.35      15   8.35      16                GLOB UNIF     WV 0 1
     992 LOAD X   43  44  16.70      16   8.35      16                GLOB UNIF     WV 0 1
     993 LOAD X   40  39   0.00      16   8.35      16                GLOB UNIF     WV 0 1
     994 LOAD X   40  39   8.35      16   8.35      16                GLOB UNIF     WV 0 1
     995 LOAD X   40  39  16.70      16   8.35      16                GLOB UNIF     WV 0 1
     996 LOAD X   39  38   0.00      16   8.35      16                GLOB UNIF     WV 0 1
     997 LOAD X   39  38   8.35      16   8.35      16                GLOB UNIF     WV 0 1
     998 LOAD X   39  38  16.70      16   8.35      16                GLOB UNIF     WV 0 1
     999 LOAD X   46  46   0.00      18  11.81      18                GLOB UNIF     WV 0 1
    1000 LOAD Y   44  46   0.00      18  11.81      18                GLOB UNIF     WV 0 1
    1001 LOAD X   44  46  11.81      18  11.81      18                GLOB UNIF     WV 0 1
    1002 LOAD Y   44  46  11.81      18  11.81      18                GLOB UNIF     WV 0 1
    1003 LOAD X   44  46  23.62      18  11.81      18                GLOB UNIF     WV 0 1
    1004 LOAD Y   44  46  23.62      18  11.81      18                GLOB UNIF     WV 0 1
    1005 LOAD X   46  40   0.00      18  11.81      18                GLOB UNIF     WV 0 1
    1006 LOAD Y   46  40   0.00      18  11.81      18                GLOB UNIF     WV 0 1
    1007 LOAD X   46  40  11.81      18  11.81      18                GLOB UNIF     WV 0 1
    1008 LOAD Y   46  40  11.81      18  11.81      18                GLOB UNIF     WV 0 1
    1009 LOAD X   46  40  23.62      18  11.81      18                GLOB UNIF     WV 0 1
    1010 LOAD Y   46  40  23.62      18  11.81      18                GLOB UNIF     WV 0 1
    1011 LOADCN   2
    1012 LOAD X    5   4  12       1,294                              GLOB CONC     STAIRWAY
    1013 LOAD Y    5   4  12       2,588                              GLOB CONC     STAIRWAY
    1014 LOAD X   12  11  27       6,533                              GLOB CONC     STAIRWAY
    1015 LOAD Y   12  11  27      13,166                              GLOB CONC     STAIRWAY
    1016 LOAD X   17  16  12      12,867                              GLOB CONC     STAIRWAY
    1017 LOAD Y   17  16  12      25,880                              GLOB CONC     STAIRWAY
    1018 LOAD X   25  24   9       6,747                              GLOB CONC     STAIRWAY
    1019 LOAD Y   25  24   9      13,536                              GLOB CONC     STAIRWAY
    1020 LOAD X   25  24   0       8,63                               GLOB CONC     BOATLAND
    1021 LOAD Y   25  24   0      15,56                               GLOB CONC     BOATLAND
    1022 LOAD X   25  24  30       8,63                               GLOB CONC     BOATLAND
    1023 LOAD Y   25  24  30      15,56                               GLOB CONC     BOATLAND
    1024 LOAD Z    6   3          -0,150                              GLOB UNIF     ADD DEAD
    1025 LOAD Z    7   2          -0,150                              GLOB UNIF     ADD DEAD
    1026 LOAD Z    5   4          -0,075                              GLOB UNIF     ADD DEAD
    1027 LOAD Z    8   1          -0,075                              GLOB UNIF     ADD DEAD
    1028 LOAD Z   12  11          -0,113                              GLOB UNIF     ADD DEAD
    1029 LOAD Z   13  10          -0,113                              GLOB UNIF     ADD DEAD
```

4-PILE ACHR STRUCTURE -- U.S. NAVY (36-IN. DIAMETER PILING) -- J.ATKINSON

```
                    1    1    2    2    3    3    4    4    5    5    6    6    7    7    8
LINE NO. 1...5....0....5....0....5....0....5....0....5....0....5....0....5....0....5....0

    1030  LOADCN   3
    1031  LOAD Z    6   3          -1.500                          GLOB UNIF   LIVELOAD
    1032  LOAD Z    7   2          -1.500                          GLOB UNIF   LIVELOAD
    1033  LOAD Z    5   4          -0.075                          GLOB UNIF   LIVELOAD
    1034  LOAD Z    8   1          -0.075                          GLOB UNIF   LIVELOAD
    1035  LOAD Z   13  10          -1.125                          GLOB UNIF   LIVELOAD
    1036  LOAD Z   12  11          -1.125                          GLOB UNIF   LIVELOAD
    1037  LDCOMB
    1038  LDCOMB   4 100.    1 100.    2                                      MAX TENS
    1039  LDCOMB   5 100.    1 100.    2 100.    3                            MAX COMP
    1040  END
```

STRAN - JOINT DEFLECTIONS AND ROTATIONS

LOAD CONDITION NO. 1

DATE 04/30/76

4-PILE ACMR STRUCTURE -- U.S. NAVY (36-IN. DIAMETER PILING) -- J.ATKINSON

JOINT NUMBER	DEFLECTION IN INCHES X	Y	Z	ROTATION IN RADIANS X	Y	Z	REMARKS
1	5.09280	5.09222	-.09598	-.00037	.00058	.00065	
2	5.15960	5.09312	-.16484	-.00024	.00065	.00045	
3	5.17419	5.09402	-.12726	-.00036	.00008	.00003	
4	5.12311	5.09492	-.08344	-.00030	.00066	-.00150	
5	5.12598	5.12586	.09083	-.00040	.00040	-.00002	
6	5.17366	5.12487	.05138	-.00051	.00081	-.00024	
7	5.16014	5.12387	-.02439	-.00043	.00075	.00015	
8	5.09504	5.12289	-.08344	-.00065	.00030	.00149	
9	4.99205	4.99193	-.20970	-.00049	.00049	.00002	
10	5.09067	5.01270	-.15741	-.00038	.00007	.00038	
11	5.01027	5.03346	-.08318	-.00048	.00054	-.00154	
12	5.04720	5.04697	.09109	-.00053	.00053	-.00001	
13	5.09070	5.02860	-.00875	-.00046	.00075	-.00031	
14	5.03376	5.01025	-.08518	-.00054	.00044	.00153	
15	4.79457	4.79453	-.20344	-.00252	.00252	.00001	
16	4.79751	4.81620	-.07979	-.00277	.00265	-.00135	
17	4.81650	4.81644	.09166	-.00288	.00289	-.00000	
18	4.81632	4.79746	-.07980	-.00265	.00278	.00135	
19	3.04876	3.04471	-.18631	-.00467	.00467	.00001	
20	3.04812	3.01530	-.07694	-.00470	.00452	-.00018	
21	2.97849	2.97848	.08270	-.00454	.00454	-.00000	
22	3.01529	3.04809	-.07694	-.00462	.00470	.00018	
23	2.81811	2.81810	-.26924	-.00375	.00374	.00001	
24	2.82284	2.78633	-.07582	-.00361	.00359	-.00040	
25	2.76092	2.76092	.15953	-.00349	.00349	-.00000	
26	2.78634	2.82283	-.07882	-.00359	.00361	.00040	
27	2.79117	2.79115	-.10673	.00018	-.00018	-.00000	
28	2.13659	2.13659	-.64302	-.00135	.00135	.00000	
29	2.17001	2.13662	-.13695	-.00120	.00120	-.00095	
30	2.13515	2.13516	.39729	-.00132	.00132	-.00000	
31	2.13663	2.17501	-.13695	-.00120	.00120	.00095	
32	2.13767	2.13767	-.20917	-.00111	.00111	-.00000	
33	1.44537	1.44537	-.87745	-.00197	.00197	.00000	
34	1.44815	1.47693	-.12139	-.00195	.00194	-.00155	
35	1.46609	1.46609	.64935	-.00215	.00215	-.00000	
36	1.47693	1.44815	-.12139	-.00194	.00195	.00155	
37	1.45786	1.45786	-.25255	-.00131	.00131	-.00000	
38	.50774	.50774	-1.06746	-.00223	.00223	.00000	
39	.96758	.55436	-.55949	-.00187	.00229	.00031	
40	.49816	.50193	-.12086	-.00233	.00206	-.00199	
41	.50963	.96335	.30729	-.00238	.00186	.00037	
42	.50576	.50577	.83981	-.00241	.00241	-.00000	
43	.96334	.50963	.30730	-.00186	.00238	-.00037	
44	.50193	.49816	-.12086	-.00206	.00233	.00198	
45	.55436	.96750	-.55950	-.00229	.00187	-.00031	
46	.50919	.50919	-.37768	-.00138	.00138	-.00000	
47	4.80624	4.80614	-.08988	.00016	-.00016	-.00000	
51	2.81823	2.81848	-.44899	-.00375	.00374	.00001	

LOAD CONDITION NO. 1

4-PILE ACHR STRUCTURE -- U.S. NAVY (36-IN. DIAMETER PILING) -- J.ATKINSON

JOINT NUMBER	DEFLECTION IN INCHES X	Y	Z	ROTATION IN RADIANS X	Y	Z	REMARKS
52	2.81919	2.81918	-.21518	-.00366	.00366	.00001	
53	2.81287	2.77836	-.07816	-.00361	.00359	-.00044	
54	2.82454	2.78800	-.07511	-.00372	.00366	.00001	
55	2.76081	2.76086	.32689	-.00349	.00349	-.00000	
56	2.76129	2.76129	.10987	-.00349	.00349	-.00000	
57	2.77644	2.81293	-.07816	-.00359	.00361	.00044	
58	2.78801	2.82453	-.07511	-.00366	.00372	-.00001	
59	2.13531	2.13539	-.70769	-.00135	.00135	.00000	
60	2.13531	2.13531	-.22497	-.00143	.00143	.00001	
61	2.14764	2.11442	-.13690	-.00120	.00120	-.00089	
62	2.18651	2.13509	-.06501	-.00139	.00151	.00045	
63	2.13395	2.13398	.46060	-.00132	.00132	-.00000	
64	2.13360	2.13361	.12664	-.00131	.00131	-.00000	
65	2.11445	2.14767	-.13689	-.00120	.00120	.00089	
66	2.13510	2.18651	-.06501	-.00151	.00139	-.00045	
67	1.46640	1.44513	-.97213	-.00197	.00197	.00000	
68	1.44930	1.44930	-.23688	-.00162	.00162	.00001	
69	1.41054	1.43927	-.12119	-.00195	.00194	-.00160	
70	1.45089	1.47847	-.05919	-.00165	.00173	.00040	
71	1.46717	1.46718	.75252	-.00215	.00215	-.00000	
72	1.46977	1.46977	.18721	-.00164	.00164	-.00000	
73	1.43929	1.41056	-.12119	-.00194	.00195	.00160	
74	1.47847	1.45609	-.05919	-.00173	.00165	-.00040	
75	.50440	.50441	-1.17467	-.00223	.00223	.00000	
76	.50324	.50324	-.50305	-.00415	.00415	.00001	
77	.45159	.45548	-.11457	-.00232	.00206	-.00184	
78	.49593	.49760	-.04403	-.00438	.00435	-.00016	
79	.50257	.50257	.95570	-.00241	.00241	-.00000	
80	.50116	.50116	.23478	-.00421	.00421	-.00000	
81	.45549	.45160	-.11457	-.00206	.00232	.00184	
82	.49760	.49393	-.04403	-.00435	.00448	.00015	
101	0.00000	0.00000	0.00000	-.00519	.00531	.00032	
102	0.00000	0.00000	0.00000	-.00497	.00497	-.00000	
103	0.00000	0.00000	0.00000	-.00493	.00495	.00001	
104	0.00000	0.00000	0.00000	-.00531	.00519	-.00032	

STRAW - JOINT DEFLECTIONS AND ROTATIONS

LOAD CONDITION NO. 2

DATE 04/30/76

4-BITE ACMG STRUCTURE -- U.S. NAVY (36-IN. DIAMETER PILING) -- J.ATKINSON

JOINT NUMBER	DEFLECTION IN INCHES X	Y	Z	ROTATION IN RADIANS X	Y	Z	REMARKS
1	.30658	1.02228	-.02499	-.00026	.00004	.00072	
2	.39519	1.02280	-.01379	-.00001	-.00063	.00073	
3	.50436	1.02332	-.01010	-.00008	-.00062	.00126	
4	.5[illegible]619	1.02384	.00603	-.00016	.00015	-.00085	
5	.5[illegible]726	.74946	.02550	-.00018	.00012	.00205	
6	.50356	.74894	-.00574	-.00018	.00075	.00050	
7	.39531	.74843	-.01176	.00003	.00074	.00100	
8	.30708	.74792	-.01277	-.00018	.00003	.00056	
9	.30040	.97437	-.02490	-.00024	.00002	.00072	
10	.43440	.98309	-.01365	-.00002	-.00030	.00108	
11	.56815	.99180	.00608	-.00021	.00014	-.00085	
12	.57486	.72029	.02360	-.00015	.00013	.00200	
13	.43411	.71726	-.00451	-.00007	.00042	.00055	
14	.30142	.71424	-.01263	-.00017	.00004	.00035	
15	.29204	.90868	-.02375	-.00072	.00012	.00068	
16	.52905	.92051	.00673	-.00079	.00043	-.00070	
17	.53570	.67861	.02376	-.00045	.00045	.00196	
18	.28859	.67229	-.01203	-.00044	.00014	.00033	
19	.20652	.50099	-.02114	-.00050	.00015	.00049	
20	.28858	.49446	.00611	-.00078	.00045	-.00050	
21	.27493	.42547	.02184	-.00047	.00052	.00112	
22	.20783	.42503	-.01099	-.00051	.00020	.00011	
23	.19517	.46368	-.03001	-.00067	.00016	.00044	
24	.26470	.45492	.00887	-.00062	.00036	-.00028	
25	.25548	.39552	.03087	-.00039	.00042	.00100	
26	.19676	.39887	-.01390	-.00044	.00018	.00009	
27	.22956	.42604	-.00057	-.00000	-.00001	.00010	
28	.14118	.34016	-.07457	-.00028	.00012	.00023	
29	.19422	.33627	.01098	-.00024	.00013	-.00005	
30	.19041	.29051	.06049	-.00019	.00019	.00046	
31	.14377	.29599	-.02974	-.00024	.00012	.00005	
32	.16696	.31423	-.00731	-.00018	.00016	.00008	
33	.08857	.21503	-.10042	-.00037	.00014	.00011	
34	.12110	.22214	.02327	-.00034	.00021	-.00000	
35	.12338	.18534	.09053	-.00029	.00021	.00019	
36	.08894	.18351	-.03619	-.00032	.00015	.00004	
37	.10413	.20196	-.00481	-.00022	.00011	.00006	
38	.02378	.07040	-.12138	-.00033	.00014	.00007	
39	.03762	.07760	-.04746	-.00024	.00017	.00002	
40	.04018	.07045	.03036	-.00035	.00018	-.00000	
41	.04497	.07111	.06947	-.00035	.00013	.00002	
42	.04125	.05248	.11206	-.00030	.00020	.00011	
43	.02512	.05598	.03471	-.00025	.00017	.00002	
44	.02276	.05192	-.04274	-.00030	.00015	.00003	
45	.02479	.05768	-.08264	-.00032	.00013	.00005	
46	.03212	.06185	-.00734	-.00024	.00013	.00002	
47	.40992	.79809	-.00380	.00004	-.00001	.00072	
51	.18461	.47429	-.04994	-.00067	.00016	.00044	

STRAN - JOINT DEFLECTIONS AND ROTATIONS

DATE 04/30/76

LOAD CONDITION NO. 2

4-PILE 4CHR STRUCTURE -- U.S. NAVY (36-IN. DIAMETER PILING) -- J.ATKINSON

JOINT NUMBER	DEFLECTION IN INCHES X	Y	Z	ROTATION IN RADIANS X	Y	Z	REMARKS
52	.19513	.46396	-.02382	-.00066	.00014	.00050	
53	.25784	.44803	.01498	-.00062	.00036	-.00029	
54	.26501	.45520	.00705	-.00062	.00036	-.00027	
55	.27449	.37247	.05034	-.00039	.00042	.00100	
56	.25544	.39665	.02451	-.00037	.00043	.00112	
57	.19450	.39663	-.02001	-.00044	.00018	.00010	
58	.19696	.39906	-.01172	-.00043	.00018	.00010	
59	.13558	.34558	-.08405	-.00026	.00012	.00023	
60	.18120	.33969	-.02711	-.00033	.00008	.00053	
61	.19310	.33510	.01355	-.00024	.00013	-.00004	
62	.19407	.33604	.00766	-.00022	.00014	-.00021	
63	.20140	.27931	.06960	-.00019	.00019	.00046	
64	.19032	.29039	.02714	-.00013	.00026	.00111	
65	.14318	.29532	-.03272	-.00024	.00012	.00002	
66	.14372	.29589	-.01156	-.00025	.00013	.00007	
67	.06589	.21769	-.11251	-.00037	.00014	.00010	
68	.08865	.21553	-.02974	-.00034	.00008	.00053	
69	.12098	.22205	.02653	-.00034	.00021	-.00001	
70	.12123	.22252	.00736	-.00025	.00014	-.00021	
71	.12812	.18076	.10257	-.00021	.00021	.00019	
72	.12372	.18569	.02920	-.00016	.00027	.00112	
73	.08793	.18257	-.04007	-.00032	.00015	.00004	
74	.08892	.16376	-.01192	-.00027	.00013	.00008	
75	.02184	.07184	-.13273	-.00033	.00014	.00008	
76	.02375	.06990	-.03658	-.00064	.00013	.00050	
77	.04055	.07049	.03455	-.00035	.00018	.00001	
78	.03980	.06994	.01033	-.00060	.00034	-.00027	
79	.04365	.04962	.12397	-.00030	.00020	.00011	
80	.04098	.05225	.03660	-.00033	.00044	.00112	
81	.02226	.05126	-.04628	-.00030	.00015	.00002	
82	.02267	.05163	-.01344	-.00045	.00022	.00010	
101	0.00000	0.00000	0.00000	-.00051	.00024	.00011	
102	0.00000	0.00000	0.00000	-.00039	.00050	.00112	
103	0.00000	0.00000	0.00000	-.00074	.00015	.00049	
104	0.00000	0.00000	0.00000	-.00070	.00041	-.00029	

STRAN - JOINT DEFLECTIONS AND ROTATIONS

LOAD CONDITION NO. 3

DATE 04/30/76

4-PILE ACMR STRUCTURE -- U.S. NAVY (36-IN. DIAMETER PILING) -- J.ATKINSON

JOINT NUMBER	DEFLECTION IN INCHES X	Y	Z	ROTATION IN RADIANS X	Y	Z	REMARKS
1	-.01020	-.01195	-.01129	.00012	-.00002	.00000	
2	-.00905	-.01085	-.08594	.00059	-.00660	.00001	
3	-.00735	-.00975	-.08667	-.00057	-.00660	.00001	
4	-.00588	-.00866	-.01417	-.00009	.00002	.00000	
5	-.00567	-.01110	-.02150	-.00018	-.00001	.00000	
6	-.00734	-.01330	-.16689	-.00115	.00707	.00002	
7	-.00906	-.01550	-.16581	.00117	.00707	.00001	
8	-.01004	-.01770	-.01694	.00023	-.00000	.00000	
9	-.00825	-.00654	-.01086	.00001	-.00001	.00000	
10	-.00772	-.00799	-.06520	.00001	-.00345	.00000	
11	-.00725	-.00944	-.01374	.00001	-.00004	.00000	
12	-.00678	-.01327	-.02064	.00002	.00005	.00000	
13	-.00772	-.01039	-.12418	.00001	.00359	.00001	
14	-.00845	-.00751	-.01608	.00002	-.00001	.00000	
15	-.00671	-.00564	-.01031	.00000	-.00001	.00000	
16	-.00552	-.00575	-.01290	.00002	.00000	.00000	
17	-.00606	-.00604	-.01894	.00004	-.00003	.00000	
18	-.00639	-.00634	-.01497	-.00000	-.00001	.00000	
19	-.00442	-.00316	-.00915	.00001	-.00001	.00000	
20	-.00462	-.00197	-.01113	-.00000	-.00001	.00000	
21	-.00270	-.00146	-.01543	-.00001	.00001	.00000	
22	-.00333	-.00401	-.01265	.00002	.00000	.00000	
23	-.00383	-.00257	-.00914	.00001	-.00001	.00000	
24	-.00386	-.00219	-.01110	-.00000	-.00001	.00000	
25	-.00332	-.00213	-.01514	-.00001	.00001	.00000	
26	-.00355	-.00305	-.01254	.00002	.00000	.00000	
27	-.00350	-.00242	-.01375	.00001	-.00001	.00000	
28	-.00185	-.00130	-.00954	.00000	-.00000	-.00000	
29	-.00163	-.00124	-.01146	.00000	-.00000	.00000	
30	-.00197	-.00128	-.01482	.00001	-.00001	.00000	
31	-.00189	-.00096	-.01264	.00000	-.00001	-.00000	
32	-.00194	-.00127	-.01172	.00000	-.00001	-.00000	
33	-.00068	-.00045	-.00960	.00000	-.00000	.00000	
34	-.00068	-.00035	-.01145	.00000	-.00000	.00000	
35	-.00046	-.00032	-.01452	.00000	-.00000	.00000	
36	-.00049	-.00045	-.01255	.00000	-.00000	.00000	
37	-.00057	-.00038	-.01209	.00000	-.00001	-.00000	
38	.00057	.00056	-.00940	.00000	-.00000	.00000	
39	.00059	.00044	-.01043	.00000	-.00000	-.00000	
40	.00060	.00029	-.01138	.00000	-.00000	-.00000	
41	.00073	.00027	-.01311	.00000	-.00001	.00000	
42	.00048	.00026	-.01467	.00000	-.00000	-.00000	
43	.00058	.00045	-.01367	.00000	-.00000	.00000	
44	.00049	.00040	-.01256	.00000	-.00000	.00000	
45	.00071	.00039	-.01105	.00000	-.00001	.00000	
46	.00052	.00032	-.01210	.00000	-.00001	.00000	
47	-.00622	-.00631	-.01210	.00000	-.00001	.00000	
51	-.00385	-.00257	-.00866	.00001	-.00001	.00000	

STRAN - JOINT DEFLECTIONS AND ROTATIONS

LOAD CONDITION NO. 3

DATE 04/30/76

4-PILE ACMR STRUCTURE -- U.S. NAVY (36-IN. DIAMETER PILING) -- J.ATKINSON

JOINT NUMBER	/----------DEFLECTION IN INCHES----------/ X	Y	Z	/----------ROTATION IN RADIANS----------/ X	Y	Z	/---REMARKS---/
52	-.00386	-.00260	-.00884	.00001	-.00001	.00000	
53	-.00385	-.00213	-.01070	-.00000	-.00001	.00000	
54	-.00393	-.00215	-.01078	-.00000	-.00001	.00000	
55	-.00326	-.00210	-.01466	-.00001	.00001	.00000	
56	-.00324	-.00205	-.01494	-.00001	.00001	.00000	
57	-.00352	-.00308	-.01207	.00002	.00000	.00000	
58	-.00349	-.00311	-.01225	.00002	.00000	.00000	
59	-.00189	-.00110	-.00941	.00000	-.00000	-.00070	
60	-.00187	-.00129	-.00717	.00000	-.00000	.00000	
61	-.00160	-.00121	-.01148	.00000	-.00000	.00000	
62	-.00163	-.00125	-.00891	.00000	-.00000	.00000	
63	-.00197	-.00129	-.01515	.00001	-.00001	.00000	
64	-.00199	-.00130	-.01261	.00000	-.00001	.00000	
65	-.00188	-.00094	-.01276	.00000	-.00001	-.00000	
66	-.00191	-.00095	-.01018	.00000	-.00000	.00000	
67	-.00068	-.00044	-.00947	.00000	-.00000	.00000	
68	-.00066	-.00044	-.00559	.00000	-.00000	.00000	
69	-.00068	-.00035	-.01142	.00000	-.00000	-.00000	
70	-.00067	-.00036	-.00712	.00000	-.00000	.00000	
71	-.00046	-.00031	-.01461	.00000	-.00000	-.00000	
72	-.00046	-.00032	-.01026	.00000	-.00000	.00000	
73	-.00049	-.00045	-.01257	.00000	-.00000	.00000	
74	-.00050	-.00044	-.00820	.00000	-.00000	.00000	
75	.00056	.00036	-.00927	.00000	-.00000	-.00000	
76	.00057	.00037	-.00408	.00000	.00000	.00000	
77	.00060	.00029	-.01134	.00000	-.00000	.00000	
78	.00060	.00025	-.00556	-.00001	-.00000	.00000	
79	.00046	.00024	-.01478	.00000	-.00000	.00000	
80	.00043	00021	-.00792	-.00001	.00001	.00000	
81	.00048	.00040	-.01257	.00000	-.00000	-.00000	
82	.00044	.00042	-.00625	.00000	.00001	.00000	
101	0.00000	0.00000	0.00000	.00000	.00001	.00000	
102	0.00000	0.00000	0.00000	-.00001	.00001	.00000	
103	0.00000	0.00000	0.00000	.00000	.00000	.00000	
104	0.00000	0.00000	0.00000	-.00001	.00000	-.00000	

STRAN - JOINT DEFLECTIONS AND ROTATIONS

DATE 04/30/76

LOAD CONDITION NO. 4

A-PIER 4&5A STRUCTURE FS U.S. NAVY (36-IN. DIAMETER PILING) -- J.ATKINSON

JOINT NUMBER	DEFLECTION IN INCHES X	Y	Z	ROTATION IN RADIANS X	Y	Z	REMARKS
1	5.39938	6.11450	-.23498	-.00083	.00062	.00076	
2	5.55479	6.11592	-.17867	-.00029	-.00061	.00118	
3	5.67855	6.11734	-.13736	-.00044	-.00054	.00129	
4	5.71931	6.11876	-.07741	-.00046	.00081	-.00236	
5	5.72324	5.87532	.11434	-.00058	.00052	.00204	
6	5.67722	5.87381	.02764	-.00070	.00155	.00026	
7	5.55548	5.87231	-.03625	-.00039	.00149	.00114	
8	5.40212	5.87081	-.09621	-.00082	.00033	.00185	
9	5.29249	5.96630	-.23460	-.00072	.00051	.00074	
10	5.52507	5.99578	-.17105	-.00031	-.00025	.00147	
11	5.57841	6.02526	-.07709	-.00065	.00068	-.00239	
12	5.62206	5.76726	.11469	-.00068	.00066	.00200	
13	5.52485	5.74586	-.01326	-.00055	.00116	.00024	
14	5.33519	5.72447	-.09581	-.00071	.00048	.00168	
15	5.08661	5.70320	-.22719	-.00324	.00264	.00069	
16	5.32656	5.73671	-.07306	-.00356	.00309	-.00206	
17	5.35220	5.49595	.11542	-.00334	.00333	.00195	
18	5.10492	5.46974	-.09183	-.00310	.00292	.00169	
19	3.25128	3.54571	-.20945	-.00547	.00474	.00050	
20	3.33670	3.50976	-.07083	-.00588	.00507	-.00048	
21	3.25341	3.40395	.10454	-.00501	.00506	.00112	
22	3.22313	3.47311	-.08794	-.00513	.00490	.00029	
23	3.01328	3.28178	-.29925	-.00442	.00390	.00045	
24	3.08754	3.24125	-.06995	-.00423	.00395	-.00069	
25	3.01636	3.15744	.19040	-.00388	.00390	.00100	
26	2.98310	3.22170	-.09272	-.00402	.00340	.00049	
27	3.02072	3.21719	-.10730	.00018	-.00019	.00010	
28	2.27778	2.47675	-.71759	-.00163	.00146	.00023	
29	2.36423	2.47290	-.12597	-.00144	.00133	-.00100	
30	2.32557	2.42567	.45778	-.00151	.00151	.00046	
31	2.28040	2.46600	-.16668	-.00144	.00132	.00097	
32	2.30463	2.45190	-.21648	-.00129	.00121	.00008	
33	1.53374	1.66040	-.97787	-.00234	.00211	.00011	
34	1.56925	1.69907	-.09812	-.00229	.00215	-.00156	
35	1.58947	1.65143	.73988	-.00244	.00246	.00019	
36	1.56587	1.63167	-.15758	-.00226	.00210	.00159	
37	1.56199	1.65982	-.25736	-.00153	.00143	.00006	
38	.53152	.57814	-1.18884	-.00256	.00258	.00007	
39	1.00520	.63195	-.60695	-.00211	.00246	.00034	
40	.53834	.57238	-.09050	-.00268	.00224	-.00199	
41	.59460	1.03446	.37676	-.00273	.00199	.00039	
42	.54701	.55825	.95187	-.00271	.00261	.00011	
43	.98846	.60561	.34201	-.00211	.00255	-.00035	
44	.52469	.55008	-.16360	-.00236	.00248	.00201	
45	.57915	1.02519	-.64214	-.00261	.00200	-.00029	
46	.54131	.57104	-.38501	-.00162	.00151	.00002	
47	5.21616	5.60424	-.09369	.00020	-.00017	.00072	
51	3.00284	3.29277	-.49893	-.00442	.00390	.00044	

STRAN - JOINT DEFLECTIONS AND ROTATIONS

LOAD CONDITION NO. 4

4-PILE ACHR STRUCTURE -- U.S. NAVY (36-IN. DIAMETER PILING) -- J.ATKINS

JOINT NUMBER	DEFLECTION IN INCHES X	Y	Z	ROTATION IN RADIANS X	Y	Z	REMARKS
52	3.01432	3.28313	-.23960	-.00432	.00380	.00051	
53	3.07071	3.22438	-.06323	-.00423	.00395	-.00073	
54	3.04955	3.24321	-.06805	-.00434	.00402	-.00026	
55	3.04037	3.13333	.37724	-.00368	.00390	.00100	
56	3.01673	3.15794	.13438	-.00386	.00392	.00112	
57	2.97094	3.20957	-.09817	-.00402	.00380	.00053	
58	2.98481	3.22359	-.08683	-.00408	.00391	.00009	
59	2.27089	2.48093	-.79174	-.00162	.00146	.00025	
60	2.27651	2.47530	-.25608	-.00176	.00150	.00053	
61	2.34974	2.44951	-.12334	-.00148	.00135	-.00094	
62	2.36258	2.47113	-.05735	-.00161	.00165	.00024	
63	2.33536	2.41329	.53020	-.00151	.00151	.00048	
64	2.32392	2.42800	.15379	-.00148	.00157	.00111	
65	2.25763	2.44299	-.16961	-.00148	.00132	.00092	
66	2.27263	2.46840	-.07657	-.00176	.00152	-.00038	
67	1.53229	1.66412	-1.08464	-.00234	.00211	.00011	
68	1.53794	1.66482	-.26662	-.00196	.00171	.00053	
69	1.53152	1.68132	-.09465	-.00229	.00215	-.00161	
70	1.57132	1.70088	-.05142	-.00191	.00187	.00018	
71	1.59529	1.64793	.85509	-.00244	.00236	.00019	
72	1.59349	1.65546	.17691	-.00180	.00191	.00131	
73	1.52722	1.59312	-.16126	-.00226	.00210	.00164	
74	1.56739	1.63385	-.07111	-.00200	.00178	-.00032	
75	.52624	.57625	-1.30741	-.00256	.00238	.00008	
76	.52708	.57314	-.33963	-.00480	.00429	.00051	
77	.49194	.52598	-.08002	-.00268	.00224	-.00183	
78	.53373	.56754	-.03370	-.00507	.00469	-.00042	
79	.54622	.55218	1.07966	-.00271	.00261	.00011	
80	.54215	.55342	.27339	-.00455	.00465	.00111	
81	.47775	.50286	-.16084	-.00236	.00248	.00186	
82	.52022	.54557	-.05747	-.00480	.00470	.00026	
101	0.00000	0.00000	0.00000	-.00576	.00555	.00043	
102	0.00000	0.00000	0.00000	-.00535	.00547	.00111	
103	0.00000	0.00000	0.00000	-.00567	.00508	.00050	
104	0.00000	0.00000	0.00000	-.00600	.00560	-.00061	

STRAN - JOINT DEFLECTIONS AND ROTATIONS

LOAD CONDITION NO. 5

4-PILE ACNR STRUCTURE -- U.S. NAVY (36-IN. DIAMETER PILING) -- J.ATKINSON

JOINT NUMBER	DEFLECTION IN INCHES X	Y	Z	ROTATION IN RADIANS X	Y	Z	REMARKS
1	5.38918	6.10254	-.24627	-.00072	.00066	.00076	
2	5.54574	6.10507	-.26461	.00029	-.00721	.00120	
3	5.67120	6.10756	-.22403	-.00102	-.00715	.00130	
4	5.71243	6.11011	-.09158	-.00055	.00083	-.00255	
5	5.71757	5.88422	.09263	-.00071	.00051	.00204	
6	5.66988	5.86051	-.13024	-.00185	.00862	.00029	
7	5.54639	5.85661	-.20206	.00077	.00056	.00116	
8	5.39208	5.85311	-.11116	-.00060	.00033	.00185	
9	5.28423	5.95476	-.28546	-.00071	.00050	.00075	
10	5.51735	5.98779	-.23625	-.00051	-.00368	.00147	
11	5.57116	6.01582	-.04063	-.00060	.00064	-.00239	
12	5.61527	5.75609	.00009	-.00066	.00071	.00200	
13	5.51713	5.73547	-.13748	-.00052	.00075	.00025	
14	5.32674	5.71896	-.11129	-.00069	.00046	.00188	
15	5.07989	5.69736	-.23750	-.00523	.00263	.00069	
16	5.32104	5.73026	-.58042	-.00554	.00509	-.00205	
17	5.34615	5.46841	.04609	-.00330	.00331	.00175	
18	5.09853	5.46341	-.10686	-.00310	.00290	.00169	
19	3.24686	3.54254	-.21860	-.00546	.00453	.00050	
20	3.33208	3.50779	-.08196	-.00548	.00506	-.00048	
21	3.25071	3.40249	.08911	-.00503	.00507	.00112	
22	3.21980	3.46910	-.10059	-.00511	.00491	.00029	
23	3.00945	3.27921	-.30840	-.00491	.00389	.00045	
24	3.08369	3.23906	-.08105	-.00423	.00394	-.00069	
25	3.01304	3.15532	.17526	-.00389	.00391	.00108	
26	2.97955	3.21865	-.10526	-.00401	.00300	.00049	
27	3.01722	3.21477	-.12105	.00019	-.00021	.00010	
28	2.27589	2.47546	-.72713	-.00162	.00146	.00023	
29	2.36259	2.47166	-.13743	-.00143	.00133	-.00099	
30	2.32360	2.42439	.44296	-.00150	.00150	.00046	
31	2.27851	2.46505	-.17933	-.00144	.00131	.00097	
32	2.30269	2.46062	-.22820	-.00129	.00121	.00008	
33	1.53306	1.65976	-.98747	-.00238	.00211	.00011	
34	1.56857	1.69472	-.10957	-.00229	.00214	-.00155	
35	1.58900	1.65111	.72536	-.00244	.00236	.00019	
36	1.56538	1.63122	-.17013	-.00226	.00210	.00159	
37	1.56142	1.65944	-.26946	-.00153	.00102	.00006	
38	.53209	.57850	-1.19824	-.00256	.00237	.00007	
39	1.00579	.63239	-.61738	-.00210	.00246	.00034	
40	.53894	.57267	-.10189	-.00268	.00224	-.00199	
41	.59533	1.03473	.36365	-.00273	.00198	.00039	
42	.54749	.55851	.93720	-.00271	.00261	.00011	
43	.98896	.60606	.32834	-.00211	.00255	-.00035	
44	.52518	.55048	-.17616	-.00236	.00248	.00201	
45	.57986	1.02558	-.65319	-.00261	.00199	-.00029	
46	.54183	.57136	-.39711	-.00161	.00150	.00002	
47	5.20994	5.59793	-.10579	.00020	-.00019	.00072	
51	2.99898	3.29020	-.50759	-.00441	.00389	.00044	

LOAD CONDITION NO. 5

4-PILE ACRW STRUCTURE -- U.S. NAVY (36-IN. DIAMETER PILING) -- J.ATKINSON

JOINT NUMBER	DEFLECTION IN INCHES X	Y	Z	ROTATION IN RADIANS X	Y	Z	REMARKS
52	3.01046	3.28053	-.24784	-.00431	.00379	.00051	
53	3.06087	3.22225	-.07393	-.00423	.00394	-.00073	
54	3.08564	3.24106	-.07884	-.00435	.00401	-.00026	
55	3.03703	3.13124	.36258	-.00389	.00391	.00100	
56	3.01349	3.15589	.11943	-.00387	.00393	.00112	
57	2.96742	3.20649	-.11024	-.00401	.00380	.00053	
58	2.98138	3.22048	-.09908	-.00407	.00391	.00009	
59	2.26902	2.47464	-.80115	-.00162	.00146	.00023	
60	2.27464	2.47401	-.26325	-.00176	.00150	.00053	
61	2.33913	2.44830	-.13083	-.00145	.00135	-.00094	
62	2.36095	2.46988	-.06626	-.00161	.00164	.00024	
63	2.33338	2.41200	.51505	-.00150	.00150	.00046	
64	2.32193	2.42270	.14117	-.00143	.00156	.00111	
65	2.25575	2.44205	-.18237	-.00184	.00131	.00092	
66	2.27892	2.46345	-.08576	-.00176	.00152	-.00038	
67	1.53162	1.66567	-1.09410	-.00234	.00211	.00011	
68	1.53728	1.66439	-.27221	-.00196	.00170	.00053	
69	1.53084	1.66097	-.10607	-.00220	.00214	-.00161	
70	1.57065	1.70053	-.05095	-.00191	.00186	.00018	
71	1.59484	1.64762	.88048	-.00244	.00236	.00019	
72	1.53303	1.65514	.16615	-.00161	.00190	.00112	
73	1.52673	1.59267	-.17382	-.00226	.00210	.00164	
74	1.56689	1.63342	-.07932	-.00199	.00178	-.00032	
75	.52680	.57661	-1.31668	-.00258	.00237	.00008	
76	.52757	.57352	-.34371	-.00479	.00429	.00051	
77	.49254	.52626	-.09136	-.00268	.00224	-.00183	
78	.53334	.56780	-.03906	-.00508	.00469	-.00042	
79	.54868	.55243	1.06988	-.00271	.00261	.00011	
80	.54257	.55363	.26546	-.00455	.00466	.00111	
81	.47623	.50326	-.17341	-.00236	.00247	.00186	
82	.52061	.54598	-.06372	-.00463	.00470	.00026	
101	0.00000	0.00000	0.00000	-.00570	.00556	.00043	
102	0.00000	0.00000	0.00000	-.00537	.00548	.00111	
103	0.00000	0.00000	0.00000	-.00567	.00506	.00050	
104	0.00000	0.00000	0.00000	-.00601	.00560	-.00061	

STRAN - REACTION FORCES AND MOMENTS

LOAD CONDITION NO. 1

PAGE 1
DATE 04/30/76

4-PILE ACMR STRUCTURE -- U.S. NAVY (36-IN. DIAMETER PILING) -- J.ATKINSON

JOINT NUMBER	FORCE IN KIPS F-X	F-Y	F-Z	MOMENT IN IN-KIPS M-X	M-Y	M-Z	REMARKS
101	-101.8254	-133.2227	150.6507	0.0000	0.0000	0.0000	
102	-220.3096	-220.3049	-1129.0104	0.0000	0.0000	0.0000	
103	-245.7955	-245.7954	1360.1873	0.0000	0.0000	0.0000	
104	-133.2224	-101.8250	150.9552	0.0000	0.0000	0.0000	
TOTAL	-701.1529	-701.1529	533.0868	0.0000	0.0000	0.0000	

STRAN - REACTION FORCES AND MOMENTS

LOAD CONDITION NO. 2

PAGE 2
DATE 04/30/76

4-PILE ACNR STRUCTURE -- U.S. NAVY (36-IN. DIAMETER PILING) -- J.ATKINSON

JOINT NUMBER	/----------FORCE IN KIPS----------/ F-X	F-Y	F-Z	/----------MOMENT IN IN-KIPS----------/ M-X	M-Y	M-Z	/---REMARKS---/
101	1.8647	-14.2385	55.3553	0.0000	0.0000	0.0000	
102	-23.5077	-22.9838	-155.4324	0.0000	0.0000	0.0000	
103	-17.5302	-30.0695	155.3967	0.0000	0.0000	0.0000	
104	-5.5278	-18.9986	-45.1797	0.0000	0.0000	0.0000	
TOTAL	-44.7010	-86.2900	10.1400	0.0000	0.0000	0.0000	

STRAN - REACTIONS FORCES AND MOMENTS

LOAD CONDITION NO. 3

DATE 04/30/76

4-PILE ACMR STRUCTURE -- U.S. NAVY (36-IN. DIAMETER PILING) -- J.ATKINSON

JOINT NUMBER	/----------FORCE IN KIPS----------/ F-X	F-Y	F-Z	/----------MOMENT IN IN-KIPS----------/ M-X	M-Y	M-Z	/---REMARKS---/
101	1.5914	-2.1687	21.3793	0.0000	0.0000	0.0000	
102	2.0915	2.2190	26.9452	0.0000	0.0000	0.0000	
103	-1.6417	-1.5020	14.2303	0.0000	0.0000	0.0000	
104	-2.0412	1.4517	18.4451	0.0000	0.0000	0.0000	
TOTAL	.0000	.0000	81.0000	0.0000	0.0000	0.0000	

S T R A N - R E A C T I O N F O R C E S A N D M O M E N T S

LOAD CONDITION NO. 4

4-PILE ACM4 STRUCTURE -- U.S. NAVY (36-IN. DIAMETER PILING) -- J.ATKINSON

JOINT NUMBER	/----------FORCE IN KIPS----------/ F-X	F-Y	F-Z	/----------MOMENT IN IN-KIPS----------/ M-X	M-Y	M-Z	/---REMARKS---/
101	-99.9606	-147.4612	206.3100	0.0000	0.0000	0.0000	
102	-243.8174	-243.2933	-1284.4427	0.0000	0.0000	0.0000	
103	-263.3258	-275.8648	1515.5840	0.0000	0.0000	0.0000	
104	-138.7502	-120.8236	105.7755	0.0000	0.0000	0.0000	
TOTAL	-745.8539	-787.4429	543.2268	0.0000	0.0000	0.0000	

STRAN - REACTION FORCES AND MOMENTS

LOAD CONDITION NO. 5

DATE 04/30/74

4-PILE ACMR STRUCTURE -- U.S. NAVY (36-IN. DIAMETER PILING) -- J.ATKINSON

JOINT NUMBER	FORCE IN KIPS F-X	F-Y	F-Z	MOMENT IN IN-KIPS M-X	M-Y	M-Z	REMARKS
101	-98.3692	-149.6299	287.6494	0.0000	0.0000	0.0000	
102	-241.7259	-241.5743	-1257.4074	0.0000	0.0000	0.0000	
103	-264.9674	-277.3668	1529.8143	0.0000	0.0000	0.0000	
104	-140.7914	-119.3719	124.2206	0.0000	0.0000	0.0000	
TOTAL	-745.8539	-787.4429	624.2268	0.0000	0.0000	0.0000	

STRAN GROUP SUMMARY REPORT

4-PILE ACOR STRUCTURE -- U.S. NAVY (36-IN. DIAMETER PILING) -- J.ATKINSON

MEMBER GROUP I D	THREE MOST RESTRICTIVE MEMBERS FIRST MEMBER NO.	FIRST MAX. U. CK	FIRST LD. CN.	SECOND MEMBER NO.	SECOND MAX. U. CK	SECOND LD. CN.	THIRD MEMBER NO.	THIRD MAX. U. CK	THIRD LD. CN.	TOTAL	NUMBER OF MEMBERS IN GROUP WITH UNITY CK GT 1.33	WITH UNITY CK GT 1.00	WITH UNITY CK LT .50
W21	5- 6	.91	5	7- 8	.76	5	4- 3	.72	5	8	0	0	3
SSC	19- 15	.90	5	21- 17	.95	4	20- 16	.90	5	12	0	0	4
W17	7- 2	.06	5	6- 3	.02	5				2	0	0	2
W18	12- 11	175.21	5	14- 9	1.38	1	11- 10	.67	5	7	2	2	1
DB3	17- 14	1.07	5	16- 9	.99	4	17- 11	.97	5	4	0	1	0
HB3	17- 16	1.75	4	16- 15	.90	4	17- 18	.84	4	4	1	1	0
XB1	27- 23	.99	4	25- 27	.85	5	17- 47	.71	4	8	0	0	3
JL1	25- 21	2.06	5	23- 19	1.92	5	28- 23	1.71	5	16	3	8	6
P1	19- 52	1.15	5	52- 60	1.15	5	50- 64	1.10	4	12	0	4	2
HB1	25- 24	1.07	4	24- 23	.79	4	25- 26	.77	4	8	0	1	4
WBN	58- 75	.20	5	75- 76	.20	5	79- 80	.19	5	32	0	0	32
DB1	31- 25	1.31	5	29- 25	1.20	5	28- 24	1.05	5	4	0	3	0
XB2	32- 29	.32	5	31- 32	.29	5	32- 28	.13	5	4	0	0	4
DB2	35- 43	.78	5	35- 41	.78	5	34- 39	.77	5	12	0	0	0
HB2	39- 38	.85	5	45- 38	.62	5	42- 43	.60	5	12	0	0	4
XB3	37- 34	.31	5	36- 37	.30	5	37- 33	.29	5	8	0	0	8
P2	68- 76	1.01	5	72- 80	.92	4	74- 82	.68	5	4	0	1	0
P3	78- 103	6.61	5	80- 102	5.64	4	82- 101	1.49	5	4	3	4	0
							TOTAL MEMBERS			161	9	25	73

STRAN UNITY CHECK SUMMARY REPORT

4-PILE ACMS STRUCTURE -- U.S. NAVY (54-IN. DIAMETER PILING) -- J. ATKINSON

THREE HIGHEST UNITY CHECKS G.T. 1.00

MEMBER NUMBER	MEMBER GROUP ID	/---FIRST HIGHEST---/ UNITY CHECK	LD. CN.	---SECOND HIGHEST--/ UNITY CHECK	LD. CN.	---THIRD HIGHEST---/ UNITY CHECK	LD. CN.
12- 11	RB5	173.21	5	72.11	4	1.84	2
76- 103	P3	6.41	5	6.56	4	5.88	1
60- 102	P3	5.64	4	5.54	5	5.00	1
25- 21	JL1	2.08	5	2.05	4	1.86	1
23- 19	JL1	1.92	5	1.92	4	1.75	1
17- 16	RB3	1.75	4	1.74	5	1.11	2
28- 23	JL1	1.71	5	1.71	4	1.56	1
62- 101	P3	1.49	5	1.41	4	1.15	1
14- 9	RIB	1.38	1	1.34	4	1.32	5
31- 25	DB1	1.31	5	1.30	4	1.11	1
30- 25	JL1	1.21	5	1.20	4	1.10	1
29- 25	DB1	1.20	5	1.19	4	1.11	1
19- 52	P1	1.15	5	1.15	4	1.04	1
52- 60	P1	1.15	5	1.14	4	1.04	1
78- 104	P3	1.15	1	1.11	5	1.03	4
56- 64	P1	1.10	4	1.10	5	.99	1
21- 56	P1	1.10	4	1.10	5	.99	1
7- 14	DB3	1.07	5	1.07	4	.94	1
25- 24	RB1	1.07	4	1.07	5	.72	1
24- 20	JL1	1.05	5	1.05	4	.97	1
28- 24	DB1	1.05	5	1.05	4	.88	1
26- 22	JL1	1.04	4	1.04	5	.97	1
29- 24	JL1	1.04	5	1.04	4	.93	1
31- 26	JL1	1.01	5	1.01	4	.93	1
68- 76	P2	1.01	5	1.00	4	.92	1

S T R A N M E M B E R S T R E S S R E P O R T N O . 1

DATE 04/30/76

4-PILE 4CMR STRUCTURE -- U.S. NAVY (36-IN. DIAMETER PILING) -- J.ATKINSON

MEMBER NO.	GROUP ID	MAXIMUM COMBINED UNITY CK	UNITY CHECK COMPONENT VALUES AXIAL	Y-AXIS	Z-AXIS	LOAD COND NO.	DIST FROM END(FT)	CONTROLLING MEMBER ACTIONS FORCE FX KIPS	TORSION MX IN-KIPS	MOMENT MY IN-KIPS	MOMENT MZ IN-KIPS	NEXT TWO HIGH CASES COMBINED UNITY CK	LD CN	COMBINED UNITY CK	LD CN
2- 1	-21-01	.521	.037	.374	.110	5	10.0	-9.89	.94	885.90	-27.94	.261	3	.260	4
8- 1	-21-01	.185	.068	.044	.073	5	0.0	-3.79	-.00	103.88	-18.58	.169	4	.164	1
9- 1	SSC-01	.071	.007	.046	.018	5	0.0	-17.30	17.87	-908.60	568.30	.058	4	.044	1
3- 2	-21-01	.265	.037	.166	.061	5	0.0	-9.86	-.01	-393.43	-15.59	.152	3	.115	4
7- 2	-17-01	.062	.028	.001	.033	5	30.0	-.62	-.01	.94	4.56	.062	4	.052	1
4- 3	-21-01	.724	.037	.278	.409	5	0.0	-9.86	-.96	658.92	103.47	.461	4	.264	3
6- 3	-17-01	.024	.005	.001	.019	5	30.0	1.25	.63	.95	2.54	.023	4	.020	2
5- 4	-21-01	.576	.107	.031	.538	5	0.0	-5.94	.01	[illegible]	136.68	.635	4	.512	2
11- 4	SSC-01	.086	.007	.042	.036	5	0.0	-16.22	50.71	971.42	900.04	.064	4	.049	1
5- 6	-21-01	.914	.054	.567	.293	5	0.0	-14.51	.97	1341.70	-773.85	.529	3	.389	4
12- 5	SSC-01	.088	.008	.080	.000	5	15.0	-19.52	62.82	-1341.69	75.49	.076	3	.052	4
6- 7	-21-01	.492	.054	.311	.126	5	0.0	-14.50	-.01	-736.07	32.12	.302	3	.191	4
7- 8	-21-01	.768	.054	.618	.092	5	10.0	-14.48	-.99	1482.37	23.45	.522	3	.244	4
14- 8	SSC-01	.096	.069	.087	.000	5	15.0	-20.37	-42.63	1484.36	104.87	.076	3	.061	4
10- 9	-18-01	.553	.309	.166	.057	5	15.0	-73.18	.45	403.96	-13.35	.469	4	.349	1
14- 9	-18-01	1.176	.850	.002	.523	1	0.0	-54.44	.00	4.85	-23.47	1.339	4	1.319	5
15- 9	SSC-01	.840	.667	.451	.321	5	0.0	-157.64	88.15	9939.02	-8383.44	.835	4	.716	1
16- 9	DB3-01	.990	.473	.197	.320	4	33.1	164.08	-225.11	366.97	-467.81	.990	5	.798	1
18- 9	DB3-01	.810	.372	.179	.260	5	33.1	120.82	32.80	322.66	388.35	.810	4	.801	1
11- 10	-18-01	.672	.309	.103	.261	5	0.0	-73.16	-.46	253.27	60.89	.589	4	.320	1
13- 10	-16-01	.032	.001	.000	.030	5	30.0	.28	.01	.91	7.87	.032	4	.018	1
12- 11	-18-01	173.215	.991	.236	171.988	5	30.0	-53.45	.00	668.28	347.99	72.111	4	1.840	2
16- 11	SSC-01	.866	.041	.459	.366	5	0.0	-97.40	-534.80	10354.33	-9251.51	.859	4	.712	1
17- 11	DB3-01	.971	.420	.003	.548	5	0.0	145.72	12.53	46.19	632.22	.967	4	.938	1
12- 13	-18-01	.590	.204	.238	.148	5	0.0	-48.34	.45	589.88	-37.82	.419	4	.264	3
17- 12	SSC-01	.857	.021	.417	.419	5	0.0	-49.91	71.81	9936.95	-9952.59	.839	4	.729	1
15- 14	-16-01	.524	.204	.273	.047	5	15.0	-48.32	-.46	677.41	12.15	.355	4	.343	1
17- 14	DB3-01	1.073	.401	.003	.669	5	0.0	159.03	-56.75	53.48	-771.37	1.071	4	.937	1
18- 14	SSC-01	.793	.043	.402	.348	5	0.0	-101.60	312.19	9236.21	-8588.84	.784	4	.711	1
16- 15	DB3-01	.897	.125	.324	.448	4	30.0	-43.33	-10.79	574.77	-676.53	.896	5	.759	1
18- 15	DB3-01	.761	.106	.240	.416	1	30.0	-28.14	5.34	455.93	600.34	.744	5	.742	4
19- 15	SSC-01	.958	.077	.512	.369	5	29.5	-170.11	149.43	11500.40	-9589.12	.953	4	.818	1
47- 15	XB1-01	.670	.123	.546	.000	4	21.2	-60.00	-29.23	1080.09	32.55	.669	5	.562	1
17- 16	DB3-01	1.747	.096	.090	1.562	4	0.0	-25.44	-5.44	-442.61	1847.28	1.744	5	1.109	2
20- 16	SSC-01	.901	.015	.496	.390	5	29.5	-32.29	-1206.90	11163.54	-9899.28	.893	4	.736	1
47- 16	XB1-01	.548	.089	.083	.456	4	21.2	-43.30	-331.21	-69.20	-904.00	.547	5	.307	1
17- 18	DB3-01	.845	.123	.198	.524	4	0.0	-52.72	-10.02	-434.27	-707.48	.842	5	.688	1
21- 17	SSC-01	.952	.043	.452	.457	4	29.5	105.39	634.20	10794.73	-10845.75	.942	5	.819	1
17- 47	XB1-01	.715	.108	.529	.076	4	0.0	-52.67	1.20	-1119.07	-829.90	.712	5	.572	1
22- 18	SSC-01	.822	.024	.430	.368	5	29.5	-52.78	1071.88	8852.83	-9117.74	.812	4	.735	1
18- 47	XB1-01	.305	.076	.000	.229	1	0.0	-36.81	271.26	-8.68	-453.48	.268	4	.267	5
23- 19	JL1-01	1.919	.968	.949	.002	5	0.0	1297.33	317.09	-12416.47	-592.98	1.918	4	1.745	1
19- 52	P1 -01	1.149	.506	.640	.002	5	4.5	-1492.24	.73	-15873.37	917.34	1.145	4	1.039	1
24- 20	JL1-01	1.050	.027	.005	1.019	5	0.0	36.33	2259.19	917.53	-13345.14	1.049	4	.965	1
20- 54	P1 -01	.730	.027	.001	.702	5	4.5	-79.32	14.64	619.57	17387.57	.724	4	.656	1
25- 21	JL1-01	2.061	.916	1.142	.000	5	0.0	-1230.93	626.87	14933.29	-62.12	2.051	4	1.859	1
21- 56	P1 -01	1.101	.452	.649	.000	4	4.5	1333.74	-.04	16061.11	-178.93	1.096	5	.995	1
26- 22	JL1-01	1.042	.089	.000	.954	4	0.0	118.78	-2167.07	67.81	12463.61	1.042	5	.965	1

STRAN MEMBER STRESS REPORT NO. 1

DATE 04/30/76

4-PILE ACMR STRUCTURE -- U.S. NAVY (36-IN. DIAMETER PILING) -- J.ATKINSON

MEMBER NO.	GROUP ID	MAXIMUM COMBINED UNITY CK	UNITY CHECK COMPONENT VALUES AXIAL	Y-AXIS	Z-AXIS	LOAD COND NO.	DIST FROM END(FT)	CONTROLLING MEMBER ACTIONS FX KIPS	TORSION MX IN-KIPS	MOMENT MY IN-KIPS	MOMENT MZ IN-KIPS	NEXT TWO HIGH CASES COMBINED UNITY CK	LD CN	COMBINED UNITY CK	LD CN
22- 58	P1 -01	.716	.063	.000	.653	5	4.5	-183.27	-13.85	-294.27	-16165.43	.709	4	.656	1
23- 23	HB1-01	.790	.147	.574	.069	4	30.9	67.22	-1.40	907.31	-314.60	.789	5	.681	1
26- 23	HB1-01	.702	.109	.498	.094	4	30.9	50.06	-11.91	810.88	353.16	.701	5	.681	1
27- 23	XB1-01	.987	.207	.779	.001	4	21.8	108.82	-22.90	1540.84	66.45	.986	5	.906	1
24- 23	JL1-01	1.712	.971	.739	.002	5	30.3	1301.33	194.24	-9667.22	-509.57	1.711	4	1.556	1
23- 51	WBN-01	.016	.015	.000	.001	4	2.8	16.48	-.72	-7.10	-202.87	.015	5	.014	1
25- 24	HB1-01	1.072	.288	.258	.526	4	0.0	131.72	-10.58	-671.02	958.71	1.071	5	.724	1
27- 24	XB1-01	.371	.155	.000	.217	4	0.0	81.43	-391.63	-.44	428.03	.369	5	.299	1
28- 24	DB1-01	1.050	.547	.336	.117	5	45.4	-397.14	-173.79	-1534.69	789.01	1.049	4	.881	1
29- 24	JL1-01	1.037	.225	.003	.810	5	30.3	301.70	650.71	591.40	-10599.20	1.035	4	.934	1
24- 53	WBN-01	.10	.001	.000	.000	4	2.8	.99	-8.44	-7.10	-2386.05	.010	5	.008	1
25- 26	HB1-01	.770	.233	.519	.018	4	30.0	106.57	-3.29	788.38	-144.95	.766	5	.725	1
26- 27	XB1-01	.832	.230	.572	.030	5	0.0	121.17	-1.82	-1159.31	-267.52	.832	4	.759	1
29- 25	DB1-01	1.202	.711	.265	.227	5	45.4	-472.77	253.34	-1156.31	-1069.81	1.195	4	1.106	1
30- 25	JL1-01	1.206	.457	.749	.000	5	30.3	-613.03	413.30	9786.74	132.03	1.200	4	1.096	1
31- 25	DB1-01	1.306	.707	.298	.309	5	45.4	-872.11	-158.96	-1113.09	1572.22	1.300	4	1.106	1
25- 55	WBN-01	.005	.005	.000	.000	4	2.8	6.21	.36	-7.10	102.22	.005	1	.003	5
26- 27	XB1-01	.303	.153	.001	.150	4	21.8	86.24	375.02	-21.73	297.23	.301	5	.299	1
28- 26	DB1-01	.912	.496	.270	.146	5	45.4	-330.16	137.02	-1208.16	-889.74	.909	4	.881	1
31- 26	JL1-01	1.008	.254	.000	.755	5	30.3	339.24	-753.20	35.47	9864.08	1.008	4	.934	1
26- 57	WBN-01	.009	.001	.000	.008	4	2.8	.86	7.72	-7.10	2182.80	.009	5	.008	1
29- 28	HB1-01	.249	.012	.031	.206	4	36.9	5.36	3.43	128.06	-329.86	.249	5	.236	1
31- 28	HB1-01	.256	.012	.026	.219	6	36.9	-3.63	-4.70	118.02	344.85	.256	4	.236	1
32- 28	XB2-01	.133	.007	.129	.002	5	26.1	-3.54	-4.42	316.90	36.22	.132	4	.123	1
33- 28	JL1-01	.538	.372	.165	.001	5	31.3	498.40	84.28	2161.43	166.62	.537	4	.492	1
34- 28	DB2-01	.757	.426	.135	.197	5	50.7	292.76	20.55	533.72	-645.89	.756	4	.684	1
36- 28	DB2-01	.714	.374	.127	.213	5	50.7	221.85	-11.87	525.88	680.91	.712	4	.686	1
28- 59	WBN-01	.076	.076	.000	.001	4	2.8	-81.55	.59	-7.10	166.29	.076	5	.070	1
30- 29	HB1-01	.309	.106	.011	.192	1	0.0	48.41	2.98	71.15	294.82	.296	5	.295	4
32- 29	XB2-01	.319	.118	.005	.196	5	0.0	69.97	-14.70	-77.45	502.21	.318	4	.285	1
34- 29	JL1-01	.267	.111	.017	.139	5	31.3	-139.27	290.66	666.45	1916.25	.266	4	.215	1
35- 29	DB2-01	.547	.291	.104	.152	5	0.0	173.03	.06	412.57	497.69	.545	4	.511	1
29- 61	WBN-01	.015	.005	.000	.010	1	2.8	-4.92	9.39	-7.10	2657.29	.015	4	.015	5
30- 31	HB1-01	.353	.123	.010	.220	5	0.0	56.47	-4.89	70.93	-334.95	.352	4	.309	1
30- 32	XB2-01	.091	.016	.039	.037	5	0.0	9.60	-4.81	136.24	-132.97	.091	4	.076	1
35- 33	JL1-01	.598	.497	.101	.000	5	31.3	-621.30	204.30	-1475.57	-24.28	.595	4	.532	1
30- 63	WBN-01	.073	.073	.000	.000	5	0.0	78.83	-.06	23.67	.00	.073	4	.067	1
31- 32	XB2-01	.293	.117	.005	.171	5	26.1	69.50	14.11	-77.05	457.88	.292	4	.235	1
35- 31	DB2-01	.547	.287	.103	.157	5	0.0	170.67	-11.64	413.18	-509.86	.546	4	.511	1
36- 31	JL1-01	.230	.078	.021	.131	5	31.3	-98.03	-340.04	728.58	-1836.00	.229	4	.215	1
31- 65	WBN-01	.018	.007	.000	.011	4	2.8	-7.49	-9.94	-7.10	-2811.60	.018	5	.015	1
34- 33	HB2-01	.396	.139	.084	.173	5	43.1	-59.74	-1.80	370.44	-532.01	.395	4	.362	1
36- 33	HB2-01	.369	.116	.070	.183	5	43.1	-49.81	-3.88	334.97	543.57	.368	4	.362	1
37- 33	XB3-01	.288	.079	.208	.000	5	30.5	-47.81	-7.96	656.01	24.52	.287	4	.267	1
38- 33	JL1-01	.104	.006	.098	.000	5	0.0	7.40	29.38	-1281.26	-22.32	.103	4	.099	1
39- 33	DB2-01	.738	.485	.033	.219	5	41.3	288.07	-17.82	230.37	-594.92	.737	4	.677	1
45- 33	DB2-01	.694	.438	.029	.227	5	41.3	259.79	23.07	219.84	609.88	.692	4	.677	1
33- 67	WBN-01	.064	.063	.000	.001	5	2.8	68.57	-.52	-7.10	-146.95	.064	4	.059	1

STRAN MEMBER STRESS REPORT NO. 1

4-PILE ACMR STRUCTURE -- U.S. NAVY (56-IN. DIAMETER PILING) -- J.ATKINSON

MEMBER NO.	GROUP ID	MAXIMUM COMBINED UNITY CK	UNITY CHECK COMPONENT VALUES AXIAL	Y-AXIS	Z-AXIS	LOAD COND NO.	DIST FROM END(FT)	CONTROLLING MEMBER ACTIONS FORCE FX KIPS	TORSION MX IN-KIPS	MOMENT MY IN-KIPS	MOMENT MZ IN-KIPS	/-NEXT TWO HIGH CASES-/ COMBINED UNITY CK	LD CN	COMBINED UNITY CK	LD CN
35- 34	HB2-01	.269	.073	.006	.189	5	0.0	-31.49	7.02	-88.96	486.49	.268	4	.266	1
37- 34	XB3-01	.307	.092	.012	.203	5	0.0	-55.17	-97.09	-159.65	658.43	.307	4	.290	1
34- 39	DB2-01	.769	.580	.058	.131	5	0.0	-278.81	-70.53	-235.55	-355.75	.767	4	.684	1
40- 34	JL1-01	.063	.004	.013	.046	5	0.0	5.03	250.47	-363.09	-680.05	.063	4	.060	1
41- 34	DB2-01	.649	.445	.118	.086	5	41.3	264.24	-69.61	391.62	333.83	.647	4	.610	1
34- 69	WBN-01	.011	.001	.000	.010	4	2.8	.55	-9.48	-7.10	-2681.27	.011	5	.011	1
35- 36	HB2-01	.285	.071	.005	.209	5	0.0	-30.66	-12.16	-79.36	-533.85	.285	4	.266	1
35- 37	XB3-01	.086	.055	.021	.010	5	0.0	-33.07	-2.00	-72.68	-54.56	.085	4	.068	1
35- 41	DB2-01	.776	.535	.004	.239	5	0.0	-256.22	-14.31	-72.75	559.57	.774	4	.730	1
42- 35	JL1-01	.029	.003	.026	.000	5	0.0	3.37	57.02	341.12	-.25	.028	4	.026	1
35- 43	DB2-01	.782	.527	.003	.252	5	0.0	-253.43	26.39	-66.38	-589.01	.780	4	.730	1
35- 71	WBN-01	.066	.066	.000	.000	5	2.8	-70.77	-.03	-7.10	-8.85	.065	4	.061	1
36- 37	XB3-01	.297	.092	.018	.192	5	30.5	-55.28	92.09	-165.61	623.73	.297	4	.290	1
65- 36	DB2-01	.643	.480	.117	.086	5	41.3	261.05	69.15	389.68	-333.80	.642	4	.610	1
44- 36	JL1-01	.062	.004	.016	.042	5	0.0	5.12	-243.74	-394.59	849.88	.062	4	.060	1
36- 45	DB2-01	.704	.521	.058	.125	5	0.0	-250.50	69.12	-239.45	352.71	.702	4	.684	1
36- 73	WBN-01	.013	.003	.000	.010	4	2.8	3.35	9.01	-7.10	2547.29	.013	5	.011	1
39- 38	HB2-01	.645	.241	.085	.360	5	25.0	-142.90	-7.04	339.75	-964.59	.645	4	.610	1
45- 38	HB2-01	.619	.213	.038	.368	5	25.0	-126.60	3.83	313.84	976.42	.618	4	.610	1
46- 38	XB3-01	.266	.017	.259	.000	5	35.4	-3.83	-4.24	814.95	14.14	.265	4	.258	1
38- 75	WBN-01	.203	.202	.000	.001	5	2.8	-217.14	1.38	-7.10	391.32	.203	4	.187	1
47- 39	HB2-01	.546	.267	.091	.189	5	25.0	158.36	17.91	403.30	580.40	.546	4	.510	1
41- 40	HB2-01	.523	.287	.039	.197	5	0.0	-149.56	4.05	-206.94	-597.66	.522	4	.491	1
48- 40	XB3-01	.244	.011	.019	.215	4	0.0	-6.36	-101.15	-207.74	765.61	.244	5	.240	1
40- 77	WBN-01	.032	.004	.000	.028	1	2.8	-3.87	25.72	-7.10	7274.31	.031	5	.031	4
42- 41	HB2-01	.594	.214	.025	.355	5	0.0	126.87	-1.48	-250.36	928.17	.593	4	.579	1
42- 43	HB2-01	.603	.212	.024	.366	5	0.0	126.11	-4.80	-245.85	-955.62	.602	4	.579	1
42- 46	XB3-01	.060	.015	.044	.000	1	35.4	10.13	-.00	-139.64	-.00	.059	5	.059	4
42- 79	WBN-01	.193	.193	.000	.000	5	0.0	208.37	.08	39.21	.00	.192	4	.179	1
43- 44	HB2-01	.512	.243	.041	.189	5	0.0	-147.40	-6.00	-264.17	578.11	.511	4	.491	1
44- 45	HB2-01	.519	.244	.089	.186	5	25.0	145.01	-20.00	394.55	-571.00	.518	4	.510	1
44- 46	XB3-01	.240	.009	.019	.212	1	35.4	-5.56	91.68	-210.01	695.86	.240	4	.240	5
44- 81	WBN-01	.038	.008	.000	.030	4	2.8	-8.56	-27.09	-7.10	-7661.42	.037	5	.032	1
51- 52	WBN-01	.016	.015	.000	.001	4	0.0	-16.48	-.00	7.10	-202.87	.015	5	.014	1
52- 60	P1 -01	1.148	.506	.640	.002	5	0.0	-1490.03	.44	-15873.37	917.34	1.145	4	1.038	1
53- 54	WBN-01	.010	.001	.000	.009	4	0.0	-.99	.60	7.10	-2386.07	.010	5	.008	1
54- 62	P1 -01	.732	.629	.001	.702	5	0.0	-79.37	9.27	619.57	17387.57	.725	4	.659	1
55- 56	WBN-01	.005	.005	.001	.000	4	0.0	-5.21	.00	7.10	102.22	.005	1	.003	5
56- 64	P1 -01	1.102	.453	.649	.000	4	0.0	1334.51	.02	16061.11	-178.93	1.096	5	.995	1
57- 58	WBN-01	.009	.001	.000	.008	4	0.0	-.86	-.00	7.10	2182.82	.009	5	.008	1
58- 66	P1 -01	.721	.067	.000	.653	5	0.0	-183.38	-8.84	-294.27	-16165.43	.713	4	.659	1
59- 20	WBN-01	.076	.076	.000	.001	4	0.0	81.55	.00	7.10	168.29	.076	5	.070	1
61- 70	P1 -01	.731	.558	.173	.001	5	0.0	-1513.81	.44	4699.20	-296.37	.726	4	.653	1
61- 62	WBN-01	.015	.005	.000	.010	1	0.0	4.92	.00	7.10	2657.31	.015	4	.015	5
62- 70	P1 -01	.253	.034	.001	.218	5	0.0	-91.90	9.27	353.07	-5417.15	.246	4	.240	1
63- 64	WBN-01	.073	.073	.000	.000	5	0.0	-78.83	.00	7.10	-15.77	.073	4	.067	1
64- 72	P1 -01	.648	.452	.195	.000	4	0.0	1333.67	.02	-4837.31	14.72	.640	5	.580	1
65- 66	WBN-01	.018	.007	.000	.011	4	0.0	7.48	-.00	7.10	-2811.61	.018	5	.015	1

4-PILE ACHR STRUCTURE -- U.S. NAVY (36-IN. DIAMETER PILING) -- J.ATKINSON

MEMBER NO.	GROUP ID	UNITY CHECK MAXIMUM COMBINED UNITY CK	COMPONENT VALUES AXIAL	Y-AXIS	Z-AXIS	LOAD COND NO.	DIST FROM END(FT)	/-------- CONTROLLING MEMBER ACTIONS --------/ FORCE FX KIPS	TORSION MX IN-KIPS	MOMENT MY IN-KIPS	MOMENT MZ IN-KIPS	/-NEXT TWO HIGH CASES-/ COMBINED UNITY CK	LD CN	COMBINED UNITY CK	LD CN
66- 74	P1 -01	.281	.072	.003	.206	5	0.0	-196.51	-8.84	590.24	5130.08	.273	4	.240	1
67- 68	WBN-01	.064	.064	.000	.001	5	0.0	-68.57	-.00	7.10	-146.95	.064	4	.059	1
68- 76	P2 -01	1.006	.437	.568	.002	5	35.3	-1533.30	.44	16537.37	-878.83	1.001	4	.916	1
69- 70	WBN-01	.011	.001	.000	.010	4	0.0	-.55	.00	7.10	-2681.28	.011	5	.011	1
70- 78	P2 -01	.672	.038	.000	.634	5	35.3	-121.16	9.27	-218.35	-18439.49	.665	4	.619	1
71- 72	WBN-01	.066	.066	.000	.000	5	0.0	70.77	.00	7.10	-8.85	.065	4	.061	1
72- 80	P2 -01	.921	.369	.552	.000	4	35.3	1294.23	.02	-16061.75	-37.14	.916	5	.839	1
73- 74	WBN-01	.013	.003	.000	.010	4	0.0	-3.35	-.00	7.10	2547.31	.013	5	.011	1
74- 82	P2 -01	.675	.071	.000	.604	5	35.3	-225.38	-8.84	418.29	17577.33	.667	4	.619	1
75- 76	WBN-01	.203	.201	.000	.002	5	0.0	217.14	.00	7.10	391.33	.202	4	.187	1
76- 103	P3 -01	6.615	6.016	.569	.030	5	0.0	-1564.55	-.00	16537.37	-878.83	6.559	4	5.879	1
77- 78	WBN-01	.032	.004	.000	.028	1	0.0	3.87	.00	7.10	7274.36	.031	5	.031	4
78- 104	P3 -01	1.148	.571	.004	.573	1	0.0	-148.66	-.00	105.27	-16659.36	1.107	5	1.034	4
79- 80	WBN-01	.194	.193	.000	.000	5	0.0	-208.37	.00	7.10	22.36	.193	4	.180	1
80- 102	P3 -01	5.645	5.091	.552	.001	4	0.0	1324.08	-0.00	-16061.75	-37.14	5.544	5	4.997	1
81- 82	WBN-01	.038	.008	.000	.030	4	0.0	8.56	-.00	7.10	-7661.47	.037	5	.032	1
82- 101	P3 -01	1.490	.871	.014	.604	4	0.0	-224.55	-.00	418.29	17577.33	1.407	4	1.148	1

STRAN MEMBER STRESS REPORT NO. 2

DATE 04/30/76

4-PILE ACHR STRUCTURE -- U.S. NAVY (36-IN. DIAMETER PILING) -- J.ATKINSON

/-------- CONTROLLING MEMBER ACTIONS --------/

MEMBER NO.	GROUP ID	MAXIMUM COMBINED UNITY CK	LOAD COND	DIST FROM END(FT)	FORCE FX KIPS	TORSION MX IN-KIPS	MOMENT MY IN-KIPS	MOMENT MZ IN-KIPS	Z-AXIS SHEAR UNITY CK	LD CN	Y-AXIS SHEAR UNITY CK	LD CN	KLY/RY	KLZ/RZ	NEXT HIGH UN.CK.	LD CN
2- 1	W21-01	.521	5	10.0	-9.89	.94	885.90	-27.94	.095	5	.004	5	14.3	69.5	.261	3
8- 1	W21-01	.185	5	0.0	-3.79	-.00	103.88	-18.58	.019	5	.001	1	42.9	208.5	.169	4
9- 1	SSC-01	.071	5	0.0	-17.30	17.87	-908.60	568.30	.008	5	.007	5	17.7	17.7	.058	4
3- 2	W21-01	.265	5	0.0	-9.86	-.01	-393.43	-15.59	.008	4	.002	4	14.3	69.5	.152	3
7- 2	W17-01	.062	5	30.0	-.62	-.01	.94	4.56	.210	5	.000	5	50.0	283.0	.062	4
4- 3	W21-01	.724	5	0.0	-9.86	-.96	658.92	103.47	.083	5	.009	5	14.3	69.5	.461	4
6- 3	W17-01	.024	5	30.0	1.25	.02	.95	2.54	.210	5	.000	5	50.0	283.0	.023	4
5- 4	W21-01	.676	5	0.0	-5.94	.01	78.52	136.60	.018	5	.014	5	42.9	208.5	.635	4
11- 4	SSC-01	.086	5	0.0	-16.22	50.71	971.42	900.04	.011	5	.009	5	17.7	17.7	.064	4
5- 6	W21-01	.914	5	0.0	-14.51	.97	1341.70	-75.85	.159	3	.008	5	14.3	69.5	.529	3
12- 5	SSC-01	.088	5	15.0	-19.52	62.82	-1341.69	75.49	.014	5	.011	5	17.7	17.7	.076	3
6- 7	W21-01	.492	5	0.0	-14.50	-.01	-736.07	32.12	.006	4	.005	4	14.3	69.5	.302	3
7- 8	W21-01	.764	5	10.0	-14.48	-.99	1462.37	23.45	.165	5	.003	1	14.3	69.5	.522	3
14- 8	SSC-01	.096	5	15.0	-20.57	-42.03	1462.36	104.87	.013	5	.011	5	17.7	17.7	.076	3
10- 9	W18-01	.553	5	15.0	-73.18	.45	463.96	-14.55	.048	5	.001	5	19.4	86.4	.469	4
14- 9	W18-01	1.376	1	0.0	-54.44	.00	4.85	-23.47	.010	1	.001	1	43.7	194.4	1.339	4
15- 9	SSC-01	.840	5	0.0	-157.64	88.15	9959.02	-8383.44	.057	4	.053	4	16.5	16.5	.835	4
16- 9	DB3-01	.990	4	33.1	164.08	-25.11	366.97	-467.81	.080	1	.061	1	61.0	61.0	.990	5
18- 9	DB3-01	.810	5	33.1	128.82	58.46	322.58	388.35	.091	5	.066	5	61.0	61.0	.810	4
11- 10	W18-01	.672	5	0.0	-73.16	-.46	253.27	60.89	.036	5	.003	5	19.4	86.4	.589	4
13- 10	W18-01	.032	5	30.0	.28	.01	.91	7.87	.129	5	.000	4	43.7	194.4	.032	4
12- 11	W18-01	173.215	5	30.0	-63.45	.00	560.22	347.99	.131	5	.094	2	43.7	194.4	72.111	4
16- 11	SSC-01	.866	5	0.0	-97.40	-534.90	10353.33	-9251.51	.102	4	.078	4	16.5	16.5	.859	4
17- 11	DB3-01	.971	5	0.0	145.72	12.53	46.19	632.22	.091	1	.069	1	61.0	61.0	.967	4
12- 13	W18-01	.590	5	0.0	-48.34	.43	589.88	-37.82	.070	5	.003	5	19.4	86.4	.419	4
17- 12	SSC-01	.857	5	0.0	-49.91	71.81	9936.95	-9952.59	.060	5	.056	5	16.5	16.5	.839	4
13- 14	W18-01	.524	5	15.0	-48.32	-.46	677.41	12.15	.076	5	.001	1	19.4	86.4	.355	4
17- 14	DB3-01	1.073	5	0.0	139.03	-56.75	53.48	-771.37	.122	4	.085	4	61.0	61.0	1.071	4
18- 14	SSC-01	.793	5	0.0	-101.60	312.19	9236.21	-8588.84	.079	4	.065	4	16.5	16.5	.784	4
16- 15	DB3-01	.897	4	30.0	-43.33	-10.79	574.77	-676.53	.060	5	.053	5	68.5	68.5	.896	5
18- 15	DB3-01	.761	1	30.0	-28.14	3.34	455.93	600.34	.046	1	.044	1	68.5	68.5	.744	5
19- 15	SSC-01	.958	5	29.5	-170.11	149.43	11300.40	-9589.12	.069	5	.062	5	34.8	34.8	.953	4
47- 15	XB1-01	.670	4	21.2	-60.00	-29.23	1080.09	32.55	.038	4	.027	4	29.4	29.4	.669	5
17- 16	DB3-01	1.747	4	0.0	-25.44	-5.44	-842.61	1847.28	.119	5	.115	5	68.5	68.5	1.744	5
20- 16	SSC-01	.901	5	29.5	-52.29	-1206.90	11163.54	-9889.28	.165	4	.111	4	34.8	34.8	.893	4
47- 16	XB1-01	.548	4	21.2	-43.30	-331.21	-69.20	-904.00	.266	4	.145	4	29.4	29.4	.547	5
17- 18	DB3-01	.845	4	0.0	-32.72	-10.02	-438.27	-707.88	.084	4	.047	4	68.5	68.5	.842	5
21- 17	SSC-01	.952	4	29.5	105.39	636.20	10794.73	-10844.75	.135	5	.087	4	34.8	34.8	.942	5
17- 47	XB1-01	.715	4	0.0	-52.67	1.20	-1119.07	-424.90	.018	4	.018	4	29.4	29.4	.712	5
22- 18	SSC-01	.822	5	29.5	-52.76	1071.62	9852.63	-9117.74	.147	4	.100	4	34.8	34.8	.812	4
18- 47	XB1-01	.305	1	0.0	-56.81	271.26	-8.68	-493.48	.235	5	.120	5	29.4	29.4	.268	4
23- 19	JC1-01	1.919	5	0.0	1297.33	312.09	-12416.47	-592.98	.176	4	.158	4	3.9	3.9	1.918	4
19- 52	P1 -01	1.149	5	4.5	-1492.24	.73	-15873.37	917.34	.029	5	.028	5	4.4	4.4	1.145	4
24- 20	JL1-01	1.050	5	0.0	36.53	2259.19	917.53	-13345.14	.379	5	.250	5	3.9	3.9	1.049	4
20- 54	P1 -01	.730	5	4.5	-79.52	14.64	619.57	17387.57	.115	1	.060	1	4.4	4.4	.724	4
25- 21	JL1-01	2.061	5	0.0	-1230.93	626.87	14933.29	-62.12	.259	5	.223	5	3.9	3.9	2.051	4
21- 56	P1 -01	1.101	4	4.5	1333.74	-.04	16061.11	-178.93	.040	4	.040	4	4.4	4.4	1.096	5
26- 22	JC1-01	1.642	4	0.0	118.78	-2167.07	67.81	12463.61	.360	4	.236	4	3.9	3.9	1.642	5

STRAN MEMBER STRES REPORT NO. 2

4-PILE ACMR STRUCTURE -- U.S. NAVY (36-IN. DIAMETER PILING) -- J.ATKINSON

MEMBER NO.	GROUP ID	MAXIMUM COMBINED UNITY CK	LOAD COND	DIST FROM END(FT)	/-------- CONTROLLING MEMBER ACTIONS --------/ FORCE FX KIPS	TORSION MX IN-KIPS	MOMENT MY IN-KIPS	MOMENT MZ IN-KIPS	Z-AXIS SHEAR UNITY CK	LD CN	Y-AXIS SHEAR UNITY CK	LD CN	KLY/RY	KLZ/RZ	NEXT HIGH UN.CK.	LD CN
22- 56	P1 -01	.716	5	4.5	-144.27	-13.33	-294.27	-16165.83	.115	1	.060	1	4.4	4.4	.709	4
24- 23	HB1-01	.790	4	30.9	67.22	-1.80	903.31	-314.60	.027	1	.025	4	70.1	70.1	.789	5
26- 23	HB1-01	.702	4	30.9	50.06	-11.91	810.88	353.16	.035	5	.029	5	70.1	70.1	.701	5
27- 23	XB1-01	.987	4	21.8	108.82	-22.90	1540.84	66.45	.041	4	.033	4	30.4	30.4	.986	5
28- 23	JL1-01	1.712	5	30.3	1301.33	198.24	-9667.22	-509.57	.072	4	.060	4	26.0	26.0	1.711	4
23- 51	WBN-01	.016	4	2.8	16.43	-.72	-7.10	-207.87	.001	4	.008	2	1.4	1.4	.015	5
25- 24	HB1-01	1.072	4	0.0	141.72	-10.46	-671.02	958.71	.112	4	.106	4	70.1	70.1	1.071	5
27- 24	XB1-01	.371	4	0.0	81.43	-301.63	-.44	428.03	.318	5	.170	5	30.4	30.4	.369	5
28- 24	DB1-01	1.050	5	45.4	-397.14	-173.79	-1330.69	789.01	.087	4	.056	4	59.3	59.3	1.049	4
29- 24	JL1-01	1.037	5	30.3	301.70	650.71	591.40	-10599.20	.140	1	.095	1	26.0	26.0	1.035	4
24- 53	WBN-01	.010	4	2.8	.99	-8.84	-7.10	-2386.05	.001	4	.098	5	1.4	1.4	.010	5
25- 26	HB1-01	.770	4	30.9	106.57	-3.29	788.38	-184.95	.024	1	.022	1	70.1	70.1	.766	5
25- 27	XB1-01	.832	5	0.0	121.17	-1.82	-1159.31	-267.52	.020	5	.019	5	30.4	30.4	.832	4
29- 25	DB1-01	1.202	5	45.4	-472.77	253.34	-1156.31	-1069.81	.114	5	.069	5	59.3	59.3	1.195	4
30- 25	JL1-01	1.206	5	30.3	-613.03	413.30	9788.74	132.03	.098	5	.075	5	26.0	26.0	1.200	4
31- 25	DB1-01	1.306	5	45.4	-470.11	-158.96	-1113.09	1572.22	.094	1	.057	1	59.3	59.3	1.300	4
25- 55	WBN-01	.005	4	2.8	5.21	.36	-7.10	102.22	.001	4	.004	5	1.4	1.4	.005	1
26- 27	XB1-01	.303	4	21.8	80.24	375.02	-21.73	297.23	.362	5	.160	5	30.4	30.4	.361	5
28- 26	DB1-01	.912	5	45.4	-530.16	137.02	-1206.16	-859.74	.073	4	.065	4	59.3	59.3	.909	4
31- 26	JL1-01	1.008	5	30.3	339.94	-753.20	35.47	9864.08	.140	1	.095	1	26.0	26.0	1.008	4
26- 57	WBN-01	.009	4	2.8	.86	7.72	-7.10	2182.80	.001	4	.089	4	1.4	1.4	.009	5
29- 28	HB1-01	.249	4	36.9	5.36	3.43	128.06	-329.86	.017	1	.015	1	85.2	85.2	.249	5
31- 28	HB1-01	.256	5	36.9	-3.63	-4.70	118.02	384.85	.018	5	.016	5	85.2	85.2	.256	4
32- 28	XB2-01	.133	5	26.1	-1.54	-4.42	316.90	36.22	.009	4	.007	4	32.3	32.3	.132	4
33- 28	JL1-01	.538	5	31.3	204.10	83.28	2151.43	186.02	.032	4	.027	4	26.9	26.9	.537	4
34- 28	DB2-01	.757	5	58.7	252.76	29.55	533.72	-645.89	.033	4	.027	4	74.0	74.0	.756	4
36- 28	DB2-01	.714	5	58.7	221.85	-11.67	525.88	680.91	.031	1	.026	1	74.0	74.0	.712	4
28- 59	WBN-01	.076	4	2.8	-81.55	.59	-7.10	168.29	.001	1	.007	2	1.4	1.4	.076	5
30- 29	HB1-01	.309	1	0.0	48.41	2.98	71.15	294.82	.015	1	.014	1	85.2	85.2	.296	5
32- 29	XB2-01	.319	5	0.0	59.97	-14.70	-77.45	502.21	.026	5	.022	5	32.3	32.3	.318	4
34- 29	JL1-01	.267	5	31.3	-140.27	240.66	606.45	1916.25	.058	1	.038	1	26.9	26.9	.266	4
35- 29	DB2-01	.547	5	0.0	173.03	.06	412.57	497.69	.020	1	.018	1	74.0	74.0	.545	4
29- 61	WBN-01	.015	1	2.8	-4.92	9.39	-7.10	2657.29	.001	5	.123	5	1.4	1.4	.015	4
30- 31	HB1-01	.353	5	0.0	56.47	-4.89	70.93	-334.95	.017	4	.015	4	85.2	85.2	.352	4
30- 32	XB2-01	.091	5	0.0	9.60	-4.81	136.24	-132.97	.007	5	.006	5	32.3	32.3	.091	4
35- 30	JL1-01	.598	5	31.3	-621.30	204.30	-1475.57	-24.28	.038	5	.027	5	26.9	26.9	.595	4
30- 63	WBN-01	.073	5	0.0	78.83	-.06	23.67	.00	.002	5	.001	2	1.4	1.4	.073	4
31- 32	XB2-01	.293	5	28.1	69.50	14.11	-77.05	437.88	.024	5	.020	5	32.3	32.3	.292	4
35- 31	DB2-01	.547	5	0.0	170.67	-11.64	413.18	-509.88	.024	5	.020	5	74.0	74.0	.546	4
36- 31	JL1-01	.230	5	31.3	-98.03	-340.04	728.58	-1836.00	.058	5	.039	5	26.9	26.9	.229	4
31- 65	WBN-01	.018	4	2.8	-7.49	-9.94	-7.10	-2811.60	.001	1	.115	5	1.4	1.4	.018	5
34- 33	HB2-01	.396	5	43.1	-59.74	-1.80	370.44	-532.01	.015	5	.015	5	77.7	77.7	.395	4
36- 33	HB2-01	.369	5	43.1	-49.81	-3.88	334.97	543.57	.017	4	.015	4	77.7	77.7	.368	4
37- 33	XB3-01	.288	5	30.5	-47.81	-7.96	656.01	24.32	.012	4	.010	4	34.1	34.1	.287	4
35- 33	JL1-01	.104	5	0.0	7.40	29.38	-1281.26	-22.32	.018	5	.016	5	30.4	30.4	.103	4
39- 33	DB2-01	.738	5	41.3	288.07	-17.82	230.57	-594.92	.028	1	.022	1	59.3	59.3	.737	4
45- 33	DB2-01	.694	5	41.3	259.79	23.07	219.84	609.88	.029	4	.022	4	59.3	59.3	.692	4
33- 67	WBN-01	.064	5	2.8	68.57	-.52	-7.10	-146.95	.001	5	.006	2	1.4	1.4	.064	4

STRAN MEMBER STRESS REPORT NO. 2

4-PILE ACHN STRUCTURE -- U.S. NAVY (36-IN. DIAMETER PILING) -- J.ATKINSON

MEMBER NO.	GROUP ID	MAXIMUM COMBINED UNITY CK	LOAD COND	DIST FROM END(FT)	/-------- CONTROLLING MEMBER ACTIONS --------/ FORCE FX KIPS	TORSION MX IN-KIPS	MOMENT MY IN-KIPS	MOMENT MZ IN-KIPS	Z-AXIS SHEAR UNITY CK	LD CN	Y-AXIS SHEAR UNITY CK	LD CN	KLY/RY	KLZ/RZ	NEXT HIGH UN.CK.	LD CN
35- 34	HB2-01	.269	5	0.0	-31.49	7.02	-88.96	486.49	.018	1	.015	1	77.7	77.7	.268	4
37- 34	XB3-01	.307	5	0.0	-55.17	-97.09	-159.65	658.43	.063	5	.040	5	34.1	34.1	.307	4
34- 39	DB2-01	.769	5	0.0	-278.81	-70.33	-235.55	-355.75	.053	5	.033	4	59.3	59.3	.767	4
40- 34	JL1-01	.063	5	0.0	5.03	250.47	-363.09	-680.05	.041	5	.027	5	30.4	30.4	.063	4
41- 34	DB2-01	.649	5	41.3	264.24	-69.61	391.62	333.83	.056	4	.035	4	59.3	59.3	.647	4
34- 69	WBN-01	.011	4	2.8	.55	-9.48	-7.10	-2681.27	.001	1	.110	5	1.4	1.4	.011	5
35- 36	HB2-01	.285	5	0.0	-30.66	-12.16	-79.36	-533.85	.019	5	.016	4	77.7	77.7	.285	4
35- 37	XB3-01	.086	5	0.0	-33.07	-2.00	-79.68	-54.56	.004	5	.004	5	34.1	34.1	.085	4
35- 41	DB2-01	.776	5	0.0	-256.22	-14.31	-72.75	559.57	.024	1	.018	1	59.3	59.3	.774	4
42- 35	JL1-01	.029	5	0.0	3.37	57.02	341.13	-.25	.016	5	.013	5	30.4	30.4	.028	4
35- 43	DB2-01	.782	5	0.0	-253.43	26.39	-66.39	-589.01	.028	4	.020	4	59.3	59.3	.780	4
35- 71	WBN-01	.066	5	2.8	-70.77	-.03	-7.10	-8.85	.001	1	.000	5	1.4	1.4	.065	4
36- 37	XB3-01	.297	5	30.5	-55.28	92.09	-165.61	623.73	.060	5	.038	5	34.1	34.1	.297	4
43- 36	DB2-01	.643	5	41.3	251.45	69.15	380.68	-335.80	.055	4	.035	4	59.3	59.3	.642	4
44- 36	JL1-01	.062	5	0.0	5.12	-245.74	-398.55	649.88	.041	1	.026	1	30.4	30.4	.062	4
36- 45	DB2-01	.704	5	0.0	-250.50	69.12	-239.45	352.71	.053	4	.032	4	59.3	59.3	.702	4
36- 73	WBN-01	.013	4	2.8	3.35	9.01	-7.10	2547.29	.001	4	.104	5	1.4	1.4	.013	5
39- 38	HB2-01	.645	5	25.0	-142.90	-7.04	339.75	-964.59	.024	5	.022	5	42.7	42.7	.645	4
45- 38	HB2-01	.619	5	25.0	-126.68	3.83	315.84	976.42	.023	1	.021	1	42.7	42.7	.618	4
46- 38	XB3-01	.266	5	35.4	-3.83	-4.24	814.95	14.14	.012	4	.011	4	40.1	40.1	.265	4
36- 75	WBN-01	.203	5	2.8	-217.14	1.58	-7.10	391.32	.000	5	.016	2	1.4	1.4	.203	4
40- 39	HB2-01	.546	5	25.0	158.38	17.91	403.30	580.40	.024	1	.019	5	42.7	42.7	.546	4
41- 40	HB2-01	.523	5	0.0	-149.56	4.05	-266.94	-597.66	.017	1	.016	5	42.7	42.7	.522	4
46- 40	XB3-01	.244	4	0.0	-6.36	-101.15	-207.74	705.01	.065	5	.041	5	40.1	40.1	.244	5
40- 77	WBN-01	.032	1	2.8	-3.87	25.72	-7.10	7274.31	.001	5	.330	5	1.4	1.4	.031	5
42- 41	HB2-01	.594	5	0.0	126.07	-1.48	-250.36	928.17	.020	1	.019	1	42.7	42.7	.593	4
42- 43	HB2-01	.603	5	0.0	126.11	-4.80	-245.85	-955.62	.021	4	.020	4	42.7	42.7	.602	4
42- 46	XB3-01	.060	1	35.4	10.13	-.00	-139.64	-.00	.005	5	.005	1	40.1	40.1	.059	5
42- 79	WBN-01	.193	5	0.0	208.37	.08	39.21	.00	.002	5	.001	5	1.4	1.4	.192	4
43- 44	HB2-01	.512	5	0.0	-147.40	-6.00	-244.17	574.11	.018	5	.016	5	42.7	42.7	.511	4
44- 45	HB2-01	.519	5	25.0	145.01	-20.00	398.59	-571.00	.025	5	.019	5	42.7	42.7	.518	4
44- 46	XB3-01	.240	1	35.4	-5.56	91.68	-210.01	695.86	.062	5	.039	5	40.1	40.1	.240	4
44- 81	WBN-01	.038	4	2.8	-8.56	-27.09	-7.10	-7661.42	.001	1	.314	5	1.4	1.4	.037	5
51- 52	WBN-01	.016	4	0.0	-16.48	-.00	7.10	-202.67	.001	4	.008	2	1.4	1.4	.015	5
52- 60	P1 -01	1.148	5	0.0	-1090.03	.44	-15873.37	917.34	.029	4	.029	4	29.6	29.6	1.145	4
53- 54	WBN-01	.010	4	0.0	-.49	.00	7.10	-2386.07	.001	5	.098	5	1.4	1.4	.010	5
54- 62	P1 -01	.732	5	0.0	-79.37	9.27	619.57	17387.37	.036	5	.032	5	29.6	29.6	.725	4
55- 56	WBN-01	.005	4	0.0	-5.21	.00	7.10	102.22	.001	1	.004	5	1.4	1.4	.005	1
56- 64	P1 -01	1.102	4	0.0	1334.51	.02	16061.11	-178.93	.030	5	.030	5	29.6	29.6	1.096	5
57- 58	WBN-01	.009	4	0.0	-.86	-.00	7.10	2182.02	.001	4	.009	4	1.4	1.4	.009	5
58- 66	P1 -01	.721	5	0.0	-183.38	-8.84	-294.37	-16165.43	.030	5	.030	5	29.6	29.6	.713	4
59- 60	WBN-01	.076	4	0.0	81.55	.00	7.10	168.29	.001	5	.007	2	1.4	1.4	.076	5
60- 68	P1 -01	.731	5	0.0	-1513.61	.44	4699.20	-296.37	.012	5	.012	5	30.6	30.6	.726	4
61- 62	WBN-01	.015	1	0.0	4.92	.00	7.10	2657.31	.001	1	.123	5	1.4	1.4	.015	4
62- 70	P1 -01	.253	5	0.0	-91.90	9.27	353.07	-5417.15	.014	5	.013	5	30.6	30.6	.286	4
63- 64	WBN-01	.073	5	0.0	-78.83	.00	7.10	-15.77	.001	5	.001	2	1.4	1.4	.073	4
64- 72	P1 -01	.648	4	0.0	1336.67	.02	-4837.31	14.72	.012	5	.012	5	30.6	30.6	.640	5
65- 66	WBN-01	.018	4	0.0	7.48	-.00	7.10	-2811.61	.001	4	.115	5	1.4	1.4	.018	5

STRAN MEMBER STRESS REPORT NO. 2

4-PILE ACHR STRUCTURE -- U.S. NAVY (36-IN. DIAMETER PILING) -- J.ATKINSON

/-------- CONTROLLING MEMBER ACTIONS --------/

MEMBER NO.	GROUP ID	MAXIMUM COMBINED UNITY CK	LOAD COND	DIST FROM END(FT)	FORCE FX KIPS	TORSION MX IN-KIPS	MOMENT MY IN-KIPS	MOMENT MZ IN-KIPS	Z-AXIS SHEAR UNITY CK	LD CN	Y-AXIS SHEAR UNITY CK	LD CN	KLY/RY	KLZ/RZ	NEXT HIGH UN.CK.	LD CN
66- 74	P1 -01	.281	5	0.0	-198.51	-8.84	590.28	5150.88	.015	5	.013	5	30.6	30.6	.273	4
67- 68	WBN-01	.064	5	0.0	-68.57	-.00	7.10	-146.95	.001	4	.006	2	1.4	1.4	.064	4
68- 76	P2 -01	1.006	5	35.3	-1543.56	.44	16537.57	-878.83	.021	5	.021	5	34.7	34.7	1.001	4
69- 70	WBN-01	.011	4	0.0	-.55	.00	7.10	-2681.28	.001	1	.110	5	1.4	1.4	.011	5
70- 78	P2 -01	.672	5	35.3	-121.16	8.27	-218.35	-18439.49	.023	5	.023	5	34.7	34.7	.665	4
71- 72	WBN-01	.066	5	0.0	76.77	.00	7.10	-8.85	.001	1	.000	5	1.4	1.4	.065	4
72- 80	P2 -01	.921	4	35.3	1294.21	.02	-16061.75	-37.14	.020	5	.020	5	34.7	34.7	.916	5
73- 74	WBN-01	.013	4	0.0	-4.35	-.00	7.10	2547.31	.001	5	.104	5	1.4	1.4	.013	5
74- 82	P2 -01	.675	5	35.3	-225.38	-8.84	418.29	17577.33	.022	5	.022	5	34.7	34.7	.667	4
75- 76	WBN-01	.203	5	0.0	217.18	.00	7.10	391.33	.001	1	.016	2	1.4	1.4	.202	4
76- 103	P3 -01	6.615	5	0.0	-1561.55	-.00	16537.57	-878.83	.953	5	.051	2	2.2	2.2	6.559	4
77- 78	WBN-01	.032	1	0.0	3.57	.00	7.10	7274.36	.001	5	.330	5	1.4	1.4	.031	5
78- 104	P3 -01	1.148	1	0.0	1184.59	-.00	105.27	-16459.36	.018	2	1.061	5	2.2	2.2	1.107	5
79- 80	WBN-01	.194	5	0.0	-298.57	.00	7.10	22.36	.001	1	.001	5	1.4	1.4	.195	4
80- 102	P3 -01	5.645	4	0.0	1324.08	-8.00	-16061.75	-37.14	.930	5	.003	5	2.2	2.2	5.544	5
81- 82	WBN-01	.038	4	0.0	8.56	-.00	7.10	-7061.47	.001	4	.314	5	1.4	1.4	.037	5
82- 101	P3 -01	1.490	5	0.0	-226.55	-.00	418.29	17577.33	.028	4	1.011	5	2.2	2.2	1.407	4

STRAN MEMBER STRESS REPORT NO. 3

DATE 04/30/76

4-PILE ACMR STRUCTURE -- U.S. NAVY (36-IN. DIAMETER PILING) -- J.ATKINSON

MEMBER NO.	GROUP ID	MAXIMUM COMBINED UNITY CK	LOAD COND NO.	DIST FROM END(FT)	AXIAL STRESS KSI	BENDING STRESS Y KSI	BENDING STRESS Z KSI	SHEAR FORCE FY KIPS	SHEAR FORCE FZ KIPS	KLY/RY	KLZ/RZ	SECOND-HIGHEST UNITY CHECK	SECOND-HIGHEST LOAD COND	THIRD-HIGHEST UNITY CHECK	THIRD-HIGHEST LOAD COND
2- 1	-21-01	.521	5	10.0	-.51	8.08	-2.38	.38	10.31	14.3	69.5	.261	3	.260	4
8- 1	521-01	.185	5	0.0	-.23	.95	-1.58	-.08	-2.11	42.9	208.5	.169	4	.164	1
9- 1	SSC-01	.071	5	0.0	-.15	-1.38	0.00	4.17	9.97	17.7	17.7	.058	4	.044	1
3- 2	-21-01	.265	5	0.0	-.61	-3.59	-1.33	-.24	.36	14.3	69.5	.152	3	.115	4
7- 2	-17-01	.062	5	30.0	-.05	.01	.72	-.02	8.85	50.0	283.0	.062	4	.052	1
4- 3	-21-01	.724	5	0.0	-.61	6.01	8.80	1.01	-9.04	14.3	69.5	.461	4	.264	3
8- 3	-17-01	.024	5	30.0	.11	.01	.40	-.01	8.85	50.0	283.0	.023	4	.020	2
5- 4	-21-01	.676	5	0.0	-.37	.68	11.62	1.79	-1.93	42.9	208.5	.635	4	.512	2
11- 4	SSC-01	.086	5	0.0	-.14	-1.70	0.00	0.22	-9.06	17.7	17.7	.064	4	.049	1
5- 6	-21-01	.914	5	0.0	-.90	12.24	-6.28	-.89	-17.59	14.3	69.5	.529	3	.389	4
12- 5	SSC-01	.088	5	15.0	-.17	-1.72	0.00	-5.05	-12.72	17.7	17.7	.076	3	.052	4
6- 7	-21-01	.492	5	0.0	-.90	-6.72	2.73	.36	.06	14.3	69.5	.302	3	.191	4
7- 8	-21-01	.764	5	10.0	-.89	13.34	1.99	-.26	18.26	14.3	69.5	.522	3	.244	4
14- 8	SSC-01	.096	5	15.0	-.18	-1.88	0.00	-4.34	14.40	17.7	17.7	.076	3	.061	4
10- 9	-18-01	.553	5	15.0	-4.52	4.72	-1.12	.09	4.71	19.4	86.4	.469	4	.349	1
14- 9	-18-01	1.376	1	0.0	-3.36	.05	-1.96	-.10	-.48	43.7	194.4	1.339	4	1.319	5
15- 9	SSC-01	.840	5	0.0	-1.40	-16.69	0.00	-45.84	-52.98	16.5	16.5	.835	4	.716	1
16- 9	DB3-01	.990	4	33.1	10.22	11.17	0.00	4.35	3.36	61.0	61.0	.990	5	.798	1
15- 9	DB3-01	.810	5	33.1	8.03	9.48	0.00	-3.71	3.08	61.0	61.0	.810	4	.801	1
11- 10	-18-01	.672	5	0.0	-4.52	2.56	5.10	.37	-5.54	19.4	86.4	.589	4	.326	1
13- 10	-18-01	.032	5	30.0	.02	.01	.66	-.02	6.93	43.7	194.4	.032	4	.018	1
12- 11	-18-01	173.215	5	30.0	-3.92	5.70	29.12	-12.69	6.70	43.7	194.4	72.111	4	1.840	2
16- 11	SSC-01	.866	5	0.0	-.86	-17.82	0.00	-45.12	-47.24	16.5	16.5	.859	4	.712	1
17- 11	DB3-01	.971	5	0.0	9.08	11.90	0.00	10.88	-3.79	61.0	61.0	.967	4	.938	1
12- 13	-18-01	.590	5	0.0	-2.98	6.00	-3.17	5.28	-6.96	19.4	86.4	.419	4	.264	3
17- 12	SSC-01	.857	5	0.0	-.44	-18.05	0.00	-50.82	24.23	16.5	16.5	.839	4	.729	1
13- 14	-18-01	.524	5	15.0	-2.98	6.89	1.02	-.00	7.40	19.4	86.4	.355	4	.343	1
17- 14	DB3-01	1.073	5	0.0	8.66	14.52	0.00	-10.59	43.82	61.0	61.0	1.071	4	.937	1
18- 14	SSC-01	.793	5	0.0	-.90	-16.19	0.00	-37.38	-45.72	16.5	16.5	.784	4	.711	1
16- 15	BB3-01	.897	4	30.0	-2.70	-16.67	0.00	9.86	3.73	68.5	68.5	.896	5	.759	1
18- 15	BB3-01	.761	1	30.0	-1.75	-14.16	0.00	68.81	3.08	68.5	68.5	.744	5	.742	4
19- 15	SSC-01	.958	5	29.5	-1.51	-19.02	0.00	32.11	41.65	34.8	34.8	.953	4	.818	1
47- 15	XB1-01	.670	4	21.2	-2.46	-11.81	0.00	-.27	5.56	29.4	29.4	.669	5	.562	1
17- 16	BB3-01	1.747	4	0.0	-1.56	-35.67	0.00	29.82	4.93	88.5	88.5	1.744	5	1.109	2
20- 16	SSC-01	.901	5	29.5	-.29	-19.15	0.00	34.75	41.49	34.8	34.8	.893	4	.736	1
47- 16	XB1-01	.548	4	21.2	-1.78	-9.91	0.00	5.28	-.31	29.4	29.4	.547	5	.307	1
17- 18	BB3-01	.845	4	0.0	-2.04	-15.59	0.00	-9.26	1.09	68.5	68.5	.842	5	.688	1
21- 17	SSC-01	.952	4	29.5	.93	19.64	0.00	22.88	42.50	34.8	34.8	.942	5	.819	1
17- 47	XB1-01	.715	4	0.0	-2.16	-13.10	0.00	-2.57	5.53	29.4	29.4	.712	5	.572	1
22- 18	SSC-01	.822	5	29.5	-.47	-17.23	0.00	30.09	34.20	34.8	34.8	.812	4	.735	1
18- 47	XB1-01	.305	1	0.0	-1.51	-4.96	0.00	22.24	.41	29.4	29.4	.268	4	.267	5
23- 19	JL1-01	1.919	5	0.0	20.91	20.54	0.00	-4.16	124.73	3.9	3.9	1.918	4	1.745	1
19- 52	P1 -01	1.149	5	4.5	-10.94	-13.88	0.00	-2.58	40.84	4.4	4.4	1.145	4	1.034	1
24- 20	JL1-01	1.050	5	0.0	.59	22.10	0.00	-106.54	515.53	3.9	3.9	1.049	4	.965	1
20- 54	P1 -01	.730	5	4.5	-.58	-15.18	0.00	-7.61	-1.22	4.4	4.4	.724	4	.656	1
25- 21	JL1-01	2.061	5	0.0	-19.84	-24.68	0.00	-2.50	-106.85	3.9	3.9	2.051	4	1.859	1
21- 56	P1 -01	1.101	4	4.5	9.77	14.02	0.00	2.48	503.90	4.4	4.4	1.096	5	.995	1
26- 22	JL1-01	1.042	4	0.0	1.91	20.60	0.00	99.67	-8.38	3.9	3.9	1.042	5	.965	1

STRAN MEMBER STRESS REPORT NO. 3

4-PILE ACMR STRUCTURE -- U.S. NAVY (36-IN. DIAMETER PILING) -- J.ATKINSON

MEMBER NO.	GROUP ID	MAXIMUM COMBINED UNITY CK	LOAD COND NO.	DIST FROM END(FT)	AXIAL STRESS KSI	BENDING STRESS Y KSI	BENDING STRESS Z KSI	SHEAR FORCE FY KIPS	SHEAR FORCE FZ KIPS	KLY/RY	KLZ/RZ	SECOND-HIGHEST UNITY CHECK	SECOND-HIGHEST LOAD COND	THIRD-HIGHEST UNITY CHECK	THIRD-HIGHEST LOAD COND
22- 58	P1 -01	.716	5	4.5	-1.34	-10.11	0.00	5.72	2.43	4.4	4.4	.709	4	.656	1
24- 23	HB1-01	.790	4	30.9	4.17	15.98	0.00	4.98	5.41	70.1	70.1	.789	5	.681	1
26- 23	HB1-01	.702	4	30.9	2.15	14.40	0.00	-4.96	4.91	70.1	70.1	.701	5	.681	1
27- 23	XB1-01	.987	4	21.8	4.47	12.84	0.00	-.29	8.41	30.4	30.4	.986	5	.906	1
28- 23	JL1-01	1.712	5	30.3	28.97	16.00	0.00	1.67	-43.91	26.0	26.0	1.711	4	1.556	1
23- 51	WBN-01	.016	4	2.8	.33	-.06	-.02	5.98	-.48	1.4	1.4	.015	5	.014	1
25- 24	HB1-01	1.072	4	0.0	6.21	16.43	0.00	30.70	3.07	70.1	70.1	1.071	5	.724	1
27- 24	XB1-01	.371	4	0.0	3.34	6.68	0.00	7.25	-.57	30.4	30.4	.369	5	.299	1
28- 24	DB1-01	1.050	5	45.4	-10.44	-8.68	0.00	-7.85	-6.89	59.3	59.3	1.049	4	.881	1
29- 24	JL1-01	1.037	5	30.3	4.86	17.54	0.00	49.13	2.61	26.0	26.0	1.035	4	.934	1
24- 53	WBN-01	.010	4	2.8	.02	-.00	-.20	70.30	-.42	1.4	1.4	.010	5	.008	1
25- 26	HB1-01	.770	4	30.9	5.63	11.40	0.00	5.69	4.76	70.1	70.1	.766	5	.725	1
25- 27	XB1-01	.832	5	0.0	4.98	13.00	0.00	-1.48	4.61	30.4	30.4	.832	4	.739	1
29- 25	DB1-01	1.202	5	45.4	-12.43	-8.82	0.00	9.48	-5.37	59.3	59.3	1.195	4	1.106	1
30- 25	JL1-01	1.206	5	30.3	-9.88	-16.17	0.00	-.39	45.43	26.0	26.0	1.200	4	1.096	1
31- 25	DB1-01	1.306	5	45.4	-12.36	-10.78	0.00	-10.76	-5.26	59.3	59.3	1.300	4	1.106	1
25- 55	WBN-01	.005	4	2.8	.10	-.00	.01	-3.01	-.44	1.4	1.4	.005	1	.003	5
26- 27	XB1-01	.303	4	21.8	3.30	3.26	0.00	-6.01	.20	30.4	30.4	.301	5	.299	1
28- 26	DB1-01	.912	5	45.4	-8.68	-8.00	0.00	8.07	-6.52	59.3	59.3	.909	4	.881	1
31- 26	JL1-01	1.008	5	30.3	5.48	16.36	0.00	-46.54	.76	26.0	26.0	1.308	4	.934	1
26- 57	WBN-01	.009	4	2.8	.02	-.00	.18	-68.31	-.42	1.4	1.4	.009	5	.008	1
29- 28	HB1-01	.249	4	36.9	.25	5.12	0.00	4.00	1.24	85.2	85.2	.249	5	.236	1
31- 28	HB1-01	.256	5	36.9	-.17	-5.27	0.00	-4.00	1.20	85.2	85.2	.256	4	.236	1
32- 28	XB2-01	.133	5	26.1	-.13	-2.73	0.00	-.14	2.38	32.3	32.3	.132	4	.123	1
33- 28	JL1-01	.538	5	31.3	8.03	3.59	0.00	-.67	-.43	26.9	26.9	.537	4	.492	1
34- 28	DB2-01	.757	5	50.7	9.19	7.16	0.00	6.58	4.49	74.0	74.0	.756	4	.688	1
36- 28	DB2-01	.714	5	50.7	8.07	7.35	0.00	-6.63	4.96	74.0	74.0	.712	4	.668	1
28- 59	WBN-01	.076	4	2.8	-1.63	-.00	.01	-4.96	-.13	1.4	1.4	.076	5	.070	1
30- 29	HB1-01	.309	1	0.0	2.28	4.39	0.00	3.53	-1.02	85.2	85.2	.296	5	.295	4
32- 29	XB2-01	.319	1	0.0	2.55	4.34	0.00	6.83	-.13	32.3	32.3	.318	4	.285	1
34- 29	JL1-01	.267	5	31.3	-2.24	-3.35	0.00	3.44	3.95	26.9	26.9	.266	4	.215	1
35- 29	DB2-01	.547	5	0.0	6.29	5.52	0.00	4.56	-4.46	74.0	74.0	.545	4	.511	1
29- 61	WBN-01	.015	1	2.8	-.10	-.00	.22	-76.29	-.40	1.4	1.4	.015	4	.015	5
30- 31	HB1-01	.353	5	0.0	2.66	4.95	0.00	-3.65	-1.01	85.2	85.2	.352	4	.309	1
30- 32	XB2-01	.091	5	0.0	.35	1.63	0.00	-.61	-1.71	32.3	32.3	.091	4	.076	1
35- 30	JL1-01	.598	5	31.3	-10.01	-2.44	0.00	.02	5.04	26.9	26.9	.595	4	.532	1
10- 63	WBN-01	.073	5	0.0	1.58	.00	.00	.46	-1.12	1.4	1.4	.073	4	.067	1
11- 32	XB2-01	.293	5	26.1	2.53	3.80	0.00	-6.31	.10	32.3	32.3	.292	4	.285	1
35- 31	DB2-01	.547	5	0.0	6.21	5.61	0.00	-4.55	-4.45	74.0	74.0	.546	4	.511	1
36- 31	JL1-01	.230	5	31.3	-1.58	-3.26	0.00	-3.68	4.05	26.9	26.9	.229	4	.215	1
31- 65	WBN-01	.018	4	2.8	-.15	-.00	-.23	82.84	-.39	1.4	1.4	.018	5	.015	1
34- 33	HB2-01	.396	5	43.1	-2.17	-5.54	0.00	5.11	2.47	77.7	77.7	.395	4	.362	1
36- 33	HB2-01	.369	5	43.1	-1.81	-5.46	0.00	-5.11	2.34	77.7	77.7	.368	4	.362	1
37- 33	XB3-01	.288	5	30.5	-1.56	-4.51	0.00	-.10	3.74	34.1	34.1	.287	4	.267	1
18- 33	JL1-01	.104	5	0.0	.12	2.12	0.00	-.00	13.14	30.4	30.4	.103	4	.099	1
19- 33	DB2-01	.738	5	41.3	10.48	5.45	0.00	5.23	3.05	59.3	59.3	.737	4	.677	1
15- 33	DB2-01	.692	5	41.3	9.45	5.54	0.00	-5.26	3.04	59.3	59.3	.692	4	.677	1
13- 67	WBN-01	.064	5	2.8	1.37	-.00	-.01	4.33	-.66	1.4	1.4	.064	4	.059	1

STRAN MEMBER STRESS REPORT NO. 3

DATE 04/30/76

4-PILE ACMR STRUCTURE -- U.S. NAVY (36-IN. DIAMETER PILING) -- J.ATKINSON

MEMBER NO.	GROUP ID	MAXIMUM COMBINED UNITY CK	LOAD COND NO.	DIST FROM END(FT)	AXIAL STRESS KSI	BENDING STRESS Y KSI	BENDING STRESS Z KSI	SHEAR FORCE FY KIPS	SHEAR FORCE FZ KIPS	KLY/RY	KLZ/RZ	SECOND-HIGHEST UNITY CHECK	SECOND-HIGHEST LOAD COND	THIRD-HIGHEST UNITY CHECK	THIRD-HIGHEST LOAD COND
35- 34	HB2-01	.269	5	0.0	-1.15	-4.23	0.00	4.63	-.75	77.7	77.7	.268	4	.266	1
37- 34	XB3-01	.307	5	0.0	-1.80	-4.65	0.00	7.49	.04	34.1	34.1	.307	4	.290	1
34- 39	DB2-01	.769	5	0.0	-10.14	-3.65	0.00	-3.72	2.76	59.3	59.3	.767	4	.684	1
40- 34	JL1-01	.063	5	0.0	.08	1.27	0.00	-10.90	.60	30.4	30.4	.063	4	.060	1
41- 34	DB2-01	.649	5	41.3	9.61	4.40	0.00	-3.65	4.39	59.3	59.3	.647	4	.610	1
34- 69	XBN-01	.011	4	2.8	.01	-.00	-.22	79.00	-.42	1.4	1.4	.011	5	.011	1
35- 36	HB2-01	.285	5	0.0	-1.12	-4.61	0.00	-4.73	-.78	77.7	77.7	.285	4	.266	1
35- 37	XB3-01	.086	5	0.0	-1.08	-.66	0.00	-.21	-1.21	34.1	34.1	.085	4	.068	1
35- 41	DB2-01	.776	5	0.0	-9.32	-4.82	0.00	4.63	1.17	59.3	59.3	.774	4	.730	1
42- 35	JL1-01	.029	5	0.0	.05	.56	0.00	.01	-8.36	30.4	30.4	.028	4	.026	1
35- 43	DB2-01	.782	5	0.0	-9.22	-5.07	0.00	-4.69	1.16	59.3	59.3	.780	4	.730	1
35- 71	XBN-01	.066	5	2.8	-1.42	-.00	-.00	.26	-.17	1.4	1.4	.065	4	.061	1
36- 37	XB3-01	.297	5	30.5	-1.80	-4.43	0.00	-7.25	-.11	34.1	34.1	.297	4	.290	1
43- 36	DB2-01	.643	5	41.3	9.51	4.38	0.00	3.65	4.39	59.3	59.3	.642	4	.610	1
44- 36	JL1-01	.062	5	0.0	.08	1.26	0.00	10.74	.84	30.4	30.4	.062	4	.060	1
36- 45	DB2-01	.704	5	0.0	-9.11	-3.64	0.00	3.71	2.80	59.3	59.3	.702	4	.684	1
36- 73	XBN-01	.013	4	2.8	.07	-.00	.21	-75.05	-.43	1.4	1.4	.013	5	.011	1
39- 38	HB2-01	.645	5	25.0	-5.20	-8.74	0.00	7.57	2.51	42.7	42.7	.645	4	.610	1
45- 38	HB2-01	.619	5	25.0	-4.61	-8.76	0.00	-7.59	2.39	42.7	42.7	.618	4	.610	1
46- 38	XB3-01	.266	5	35.4	-.12	-5.59	0.00	-.04	4.20	40.1	40.1	.265	4	.258	1
36- 75	XBN-01	.203	5	2.8	-4.34	-.00	.03	-11.53	.35	1.4	1.4	.203	4	.187	1
40- 39	HB2-01	.546	5	25.0	5.76	6.04	0.00	-.95	3.64	42.7	42.7	.546	4	.510	1
41- 40	HB2-01	.523	5	0.0	-5.44	-5.59	0.00	-1.10	1.39	42.7	42.7	.522	4	.491	1
46- 40	XB3-01	.244	4	0.0	-.21	-5.04	0.00	7.26	-.10	40.1	40.1	.244	5	.240	1
40- 77	XBN-01	.032	1	2.8	-.08	-.00	.61	-210.32	-.40	1.4	1.4	.031	5	.031	4
42- 41	HB2-01	.594	5	0.0	4.62	8.22	0.00	7.12	.08	42.7	42.7	.593	4	.579	1
42- 43	HB2-01	.603	5	0.0	4.59	8.43	0.00	-7.18	.67	42.7	42.7	.602	4	.579	1
42- 46	XB3-01	.060	1	35.4	.53	.96	0.00	.00	.99	40.1	40.1	.059	5	.059	4
42- 79	XBN-01	.193	5	0.0	4.17	.01	.00	-.00	-1.67	1.4	1.4	.192	4	.179	1
43- 44	HB2-01	.512	5	0.0	-5.36	-5.43	0.00	.59	1.37	42.7	42.7	.511	4	.491	1
48- 45	HB2-01	.519	5	25.0	5.28	5.93	0.00	.91	3.56	42.7	42.7	.518	4	.510	1
44- 46	XB3-01	.240	1	35.4	-.18	-4.99	0.00	-7.21	[illegible]	40.1	40.1	.240	4	.240	5
44- 81	XBN-01	.038	4	2.8	-.17	-.00	-.64	225.73	-.39	1.4	1.4	.037	5	.032	1
51- 52	XBN-01	.016	4	0.0	-.33	.00	-.02	-5.98	-.42	1.4	1.4	.015	5	.014	1
52- 60	P1 -01	1.148	5	0.0	-10.92	-13.88	0.00	3.34	95.73	29.6	29.6	1.145	4	1.038	1
53- 54	XBN-01	.010	4	0.0	-.02	.00	-.20	-75.30	-.42	1.4	1.4	.010	5	.008	1
54- 62	P1 -01	.732	5	0.0	-.58	-15.16	0.00	62.72	-1.56	29.6	29.6	.725	4	.659	1
55- 56	XBN-01	.005	4	0.0	-.10	.00	.01	3.01	-.42	1.4	1.4	.005	1	.003	5
56- 68	P1 -01	1.102	4	0.0	9.74	14.02	0.00	-.53	-50.33	29.6	29.6	1.096	5	.995	1
57- 58	XBN-01	.009	4	0.0	-.02	.00	.18	64.31	-.42	1.4	1.4	.009	5	.008	1
58- 66	P1 -01	.721	5	0.0	-1.34	-14.11	0.00	-58.57	1.38	29.6	29.6	.713	4	.659	1
59- 60	XBN-01	.076	4	0.0	1.63	.00	.01	4.96	-.42	1.4	1.4	.076	5	.070	1
60- 68	P1 -01	.731	5	0.0	-11.69	-4.11	0.00	-1.57	-23.17	30.6	30.6	.726	4	.653	1
61- 62	XBN-01	.015	1	0.0	.10	.00	.22	75.29	-.42	1.4	1.4	.015	4	.015	5
62- 70	P1 -01	.253	5	0.0	-.67	-4.74	0.00	-25.71	-2.95	30.6	30.6	.246	4	.240	1
63- 64	XBN-01	.073	5	0.0	-1.58	.00	-.00	-.85	-.42	1.4	1.4	.073	4	.067	1
64- 72	P1 -01	.648	4	0.0	9.77	4.22	0.00	-.06	20.98	30.6	30.6	.640	5	.580	1
65- 66	XBN-01	.018	4	0.0	.15	.00	-.23	-82.84	-.42	1.4	1.4	.018	5	.015	1

STRAN MEMBER STRE[illegible] REPORT NO. 5

4-PILE ACHR STRUCTURE -- U.S. NAVY (36-IN. DIAMETER PILING) -- J.ATKINSON

MEMBER NO.	GROUP ID	MAXIMUM COMBINED UNITY CK	LOAD COND NO.	DIST FROM END(FT)	AXIAL STRESS KSI	BENDING STRESS Y KSI	BENDING STRESS Z KSI	/----SHEAR FORCE----/ FY KIPS	FZ KIPS	KLY/RY	KLZ/RZ	SECOND-HIGHEST UNITY CHECK	SECOND-HIGHEST LOAD COND	THIRD-HIGHEST UNITY CHECK	THIRD-HIGHEST LOAD COND
65- 74	P1 -01	.281	5	0.0	-1.[illegible]	-8.[illegible]	0.00	24.33	-3.88	30.6	30.6	.275	4	.240	1
67- 68	WBN-01	.064	5	0.0	-1.57	.00	-.01	-4.33	-.42	1.4	1.4	.064	4	.059	1
68- 76	P2 -01	1.006	5	35.3	59.[illegible]	-12.50	0.00	2.76	48.84	34.7	34.7	1.001	4	.916	1
69- 70	WBN-01	.011	4	0.0	-.01	.00	-.22	-79.00	-.42	1.4	1.4	.011	5	.011	1
70- 78	P2 -01	.672	5	35.3	-.79	-13.70	0.00	53.47	1.68	34.7	34.7	.665	4	.619	1
71- 72	WBN-01	.066	5	0.0	1.42	.00	-.00	-.26	-.42	1.4	1.4	.065	4	.061	1
72- 80	P2 -01	.921	4	35.3	7.[illegible]	11.[illegible]	0.00	.17	-40.60	34.7	34.7	.916	5	.859	1
73- 74	WBN-01	.013	4	0.0	2.67	.06	.21	75.05	-.42	1.4	1.4	.013	5	.011	1
74- 82	P2 -01	.675	5	35.3	-1.39	-13.06	0.00	-50.90	3.43	34.7	34.7	.667	4	.619	1
75- 76	WBN-01	.203	5	0.0	4.34	.00	.03	11.53	-.42	1.4	1.4	.202	4	.187	1
76- 103	P3 -01	6.615	5	0.0	-129.95	12.28	-.65	-8.77	-165.27	2.2	2.2	6.559	4	5.879	1
77- 78	WBN-01	.032	1	0.0	.08	.00	.61	214.32	-.42	1.4	1.4	.031	5	.031	4
78- 104	P3 -01	1.148	1	0.0	-13.[illegible]	.[illegible]	12.57	-165.[illegible]	-1.55	2.2	2.2	1.107	5	1.054	4
79- 80	WBN-01	.194	5	0.0	4.17	.00	.00	.66	-.42	1.4	1.4	.195	4	.160	1
80- 102	P3 -01	5.645	4	0.0	169.97	11.[illegible]	-.03	-.57	159.96	2.2	2.2	5.544	5	4.497	1
81- 82	WBN-01	.038	4	0.0	.17	.00	[illegible]	-225.73	-.42	1.4	1.4	.037	5	.032	1
82- 101	P3 -01	1.490	5	0.0	-18.82	.31	13.05	175.36	-4.46	2.2	2.2	1.407	4	1.148	1

```
JYJ3G0G.   04/30/76. #UNITED COMPUTING* 67. APEX/SL. 8.0.25

13.18.39$STRAN,CM100,T500,RT.
13.18.39>FL      64      0.000
13.18.39$AC3400CM80023,2777100CC )B
13.18.39. 04/30/76,JYJ3G0G
13.18.39>FL    3392      0.001
13.18.39.GET,TAPF26=SPFILE(LIBRARY)
13.18.40.READY =   SPFILE
13.18.40.GET,STRAN=STRANS(LIBRARY)
13.18.41.DAF READY =          STRANS
13.18.41.GET,TAPF3=S771A1.
13.18.43.READY =   S771A1
13.18.43.RFL,170000.
13.18.43>FL     4096      0.001        0        0.
13.18.43>FI      176          5
13.18.43.STRAN.
13.18.43>FLS  61440      0.002
13.18.44>FLA  61440      0.359      336        8
13.18.46.FL REQUIRED TO LOAD     621178 ( 25679)
13.18.46.FL REQUIRED TO EXECUTE  52100B ( 21568)
13.18.46>FE   61440      0.360
13.18.55.ESC START STRAN6
13.18.55.
13.18.55.  SSSSSSSSSSSSSSSSSSSSSSSSSSSS
13.18.55. SSSSSSSSSSSSSSSSSSSSSSSSSSSSS
13.18.55. SSSSSSSSSSSSSSSSSSSSSSSSSSSSS
13.18.55. SSSSSSSSSSSSSSSSSSSSSSSSSSSSS
13.18.55. SSSSSSS
13.18.55. SSSSSSS TTTTTTTTTTTTTTTTTTTTTT
13.18.55. SSSSSSS TTTTTTTTTTTTTTTTTTTTTT
13.18.55. SSSSSSS TTTTTTTTTTTTTTTTTTTTTT
13.18.55. SSSSSSS TTTTTTTTTTTTTTTTTTTTTT
13.18.55. SSSSSSS          TTTTTTT
13.18.55. SSSSSSSSSSSSSSS TTTTTTT SSSSSS
13.18.55. SSSSSSSSSSSSSSS TTTTTTT SSSSSSS
13.18.55. SSSSSSSSSSSSSSS TTTTTTT SSSSSSS
13.18.55. SSSSSSSSSSSSSSS TTTTTTT SSSSSSS
13.18.55.                 TTTTTTT SSSSSSS
13.18.55. SSSSSSSSSSSSSSS TTTTTTT SSSSSSS
13.18.55. SSSSSSSSSSSSSSS TTTTTTT SSSSSSS
13.18.55. SSSSSSSSSSSSSSS TTTTTTT SSSSSSS
13.18.55. SSSSSSSSSSSSSSS TTTTTTT SSSSSS
13.18.55.
13.18.55.     SYNERCOM TECHNOLOGY, INC.
13.18.55.       S T R A E 6
13.18.55.          MOD 12
13.19.39.4-PILE ACMR STRUCTURE -- U.S. NAVY  (36-
13.19.39.IN. DIAMETER PILING) -- J.ATKINSON
13.19.39.04/30/76
13.19.39...  5 UNITS     83 JOINTS    161 MEMBERS
13.19.39...  3 BASIC LOADS ON   761 LOAD CARDS
13.19.39...  2 COMBINED LOADS
13.19.39...UNITY CHECK REQUESTED
13.19.55.UNIT  1, 20 JT ELIM,  5 JT FWD, CYCLE  1
13.20.31.UNIT  2, 20 JT ELIM, 24 JT FWD, CYCLE  1
13.21.03.UNIT  3, 20 JT ELIM, 13 JT FWD, CYCLE  1
13.21.44.UNIT  4, 20 JT ELIM,  2 JT FWD, CYCLE  1
13.22.09.UNIT  5,  3 JT ELIM,  0 JT FWD, CYCLE  1
13.22.11.BACKWARD SUBSTITUTION
13.23.15.PRINTING DEFLECTIONS
13.23.24.COMPUTING FORCES
13.24.09.COMPUTING UNITY CHECK
```

```
13.25.28.$BC[redacted]   STRAN
13.25.29.STOP
13.25.29$SB*   6 440     25,010     17104     2459,
13.25.29$FI     - 35          2
13.25.29.COST.
13.25.29$FL    61440     25,010
13.25.30.              SERVICE UNITS*     182.2
13.25.30.             JOB COST*$       45.55
13.25.30$FL    12288     25,032        13         5
13.25.30.EXIT.
13.25.30$JTOO  2368      25,033
13.25.30.     *FL*   *CPU SEC.  *DISC PRUS* DISC ACC
13.25.30.*P.F. PRUS*P.F. ACC  *TAPE PRUS* TAPE ACC
```