AMERICAN

CODE NO. 1

U·S·NAVAL·TECHNICAL·MISSION·IN·EUROPE

AD-A953 470

UNCLASSIFIED

TECHNICAL REPORT NO. 422-45.

GERMAN "WELLENSONDE" (WAVE-SOUNDER) LINE UNIT

September 1945

DTIC FILE COPY

BEST AVAILABLE COPY

DTIC ELECTE AUG 2 1984 S D

D

DECLASSIFIED
DOD DIR 5200.9

U·S·NAVAL·TECHNICAL·MISSION·IN·EUROPE

DISTRIBUTION STATEMENT A
Approved for public release;
Distribution Unlimited

UG 490/P. 1

84 05 15 529

U. S. NAVAL TECHNICAL MISSION IN EUROPE
c/o Fleet Post Office
New York, N.Y.

File: A9-16(3)(40/Hn)

Serial: 01178

28 September 1945.

[redacted] UNCLASSIFIED

From: Chief, U.S. Naval Technical Mission in Europe.
To : Chief of Naval Operations (OP-16-PT).

Subject: U.S. Naval Technical Mission in Europe Technical Report No. 422-45, German "Wollensonde" (Wave-Sounder) Mine Unit - Forwarding of.

Enclosures: (A) (HW) Four (4) complete copies of subject report as listed in distribution.
(B) (HW) One (1) set of negatives of photographs in subject report with copy No. 5 as listed in distribution.

1. Enclosures (A) and (B) are forwarded herewith.

2. CNO (OP-16-PT) is requested to make complete additional copies of this report for forwarding to such other agencies as may be interested.

L. V. HONSINGER
Capt. U. S. N.
Acting

DISTRIBUTION To:

CNO (OP-16-PT)	Copy Nos.	1 - 4
CNO (OP-16-PT) ..... w/Enclosure B	Copy No.	5
FLAT	Copy No.	6
Office of Research and Invention	Copy No.	7
ComNavEu	Copy No.	8
ComNavEu for Admiralty	Copy No.	9
BuShips (Code 620)	Copy No.	10
BuOrd (Re)	Copy No.	11
BuOrd (Re 6)	Copy No.	12
BuOrd (Re 7a)	Copy No.	13
CNO (OP-30-3M)	Copy No.	14
Mine Disposal School	Copy No.	15
NOL	Copy No.	16
NavTechMisEu (Mission Files)	Copy No.	17

Accession For
NTIS GRA&I ☒
DTIC TAB ☐
Unannounced ☐
Justification
By Per Ltr.
Distribution/
Availability Codes
Dist | Avail and/or Special
A/1
UNANNOUNCED

Released

[redacted]

UNCLASSIFIED

TECHNICAL REPORT NO. 422-45

GERMAN "WELLENSONDE" (WAVE-SOUNDER) MINE UNIT

DTIC COPY INSPECTED 3

SUMMARY

This report contains information on the German "Wellensonde" mine firing unit. This unit is dependent for operation on the distortion produced in an alternating field originating in the mine by a target vessel. It was designed for use in the LMB ground mine. This device was in the development stage at the end of the war in Europe and had not been used operationally.

September 1945

U. S. NAVAL TECHNICAL MISSION IN EUROPE

DTIC
ELECTE
AUG 2 1984
S D
D

DISTRIBUTION STATEMENT A
Approved for public release;
Distribution Unlimited

[redacted] UNCLASSIFIED

GERMAN "WELLENSONDE" (WAVE-SOUNDER) MINE UNIT

1. Introduction.

(a) One of the special developments carried on in mine firing devices by the Germans was in the distortion caused by target vessels to high-frequency alternating current fields. The only experimental product of this development is the so called "Wellensonde", a development of Dr. Ing. Rudolf Hell. The "Wellensonde" is an experimental device and never reached advanced development or trials.

(b) No specimens of or documents relating to the "Wellensonde" were captures. All information contained herein has been obtained through interrogation of German prisoners of war.

2. General.

The "Wellensonde" (wave-sounder) creates and alternating electromagnetic field around the mine case, When this field is distorted by the transit of a ship or other body, the mine fires. The firing unit devised consists of a transmitter, a receiver, antennae for both transmitter and receiver, and firing circuit. The transmitter has an output of 5 watts at 5000 cps. Each antenna is rectangular, made of metal tubing, and 50 x 80 cm. in size. The two antennae are mounted in the LMB IV mine-case as shown in Figure 2, and cast into the explosive. Since the antennae are mounted at right-angles to each other there is a little or no mutual induction. The mine-case is made of plasticized pressed paper (press-stoff) for minimum interference with the field pattern. If the symmetry of the field produced by the transmitter is disturbed by the metal mass of a ship passing overhead, a small amount of alternating current appears in the receiver's antenna, and the firing circuit of the receiver output fires the mine.

3. Characteristics

The distortion effect at the receiving antenna through field disturbance varries inversely with the 5th to 6th power of the distance to the disturbing force. Thus, the sensitivity is greatly dependent upon the depth of water. A change in depth of water from 20 to 22 meters will result in reduction of sensitivity by 50 per cent.

UNCLASSIFIED

3. Characteristics (Cont'd).

The high battery consumption of such a system make it necessary to use a triggering system which will allow the "Wellensonde" to stabilize before the firing impulse arises. It was intended to use a simple acoustic triggering system. A few seconds are necessary for the "Wellensonde" to come to equilibrium. A high geometric and electrical symmetry of the antennae and amplifiers is necessary to make the system operate properly. However, after a long period these characteristics tend to vary somewhat, and spontaneous firing may occur after the "Wellensonde" has been repeatedly switched on. In order to avoid this, a rate-of-change circuit is used in the firing circuit to allow firing only when sudden surges occur. This principle, however, was not adopted due to the great variation in sensitivity with depth and was considered of no operational value in a mine.

Prepared by:

W. C. HOLLES
Lieut., USNR.

R. J. FRANZ,
Lieut., USNR

C. J. OLENIACZ,
Lieut., USNR.

H. G. VOGEL,
Lieut., USNR.

[redacted]

Wellensonde.

UNCLASSIFIED

Anlage Blatt

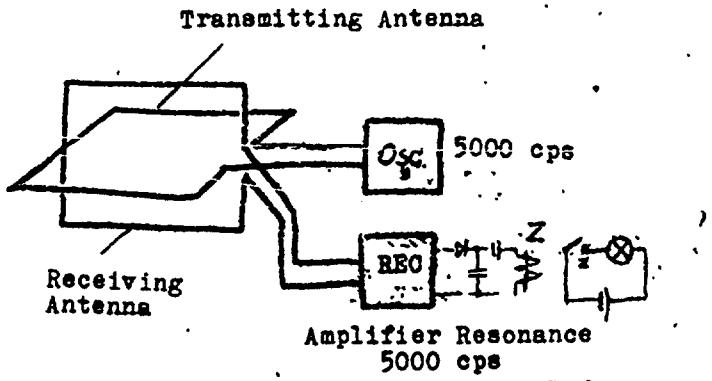

Fig.1
SCHEMATIC DIAGRAM

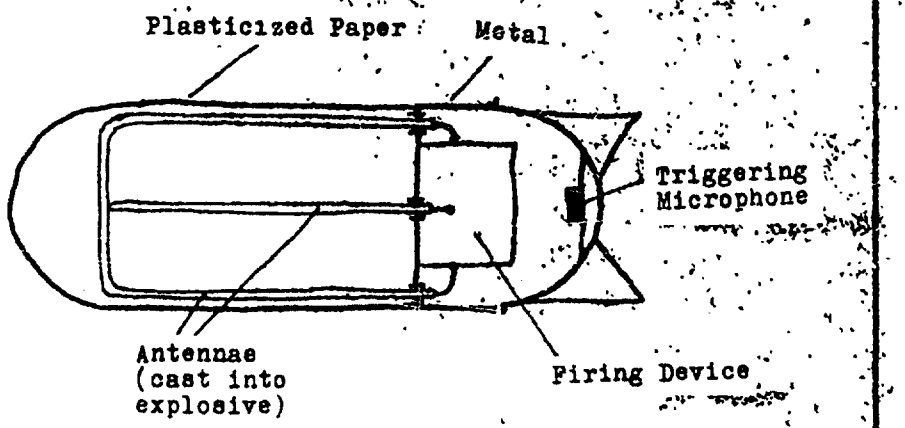

Fig.2
MOUNTING IN LMB MINE

17.7.45

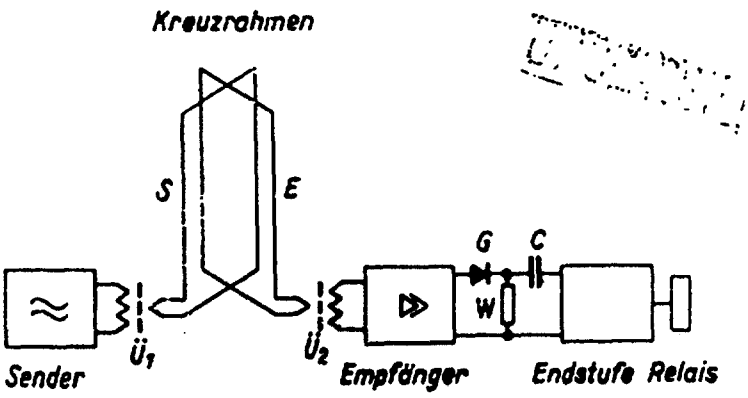

Abb. 17
Zündgerät Wellensonde — Übersichtsschaltplan

Es liegt ein Gleichrichter *G*, der auf den Widerstand *W* arbeitet. Über den Kondensator *C* wird die Spannung an *W* abgenommen und der Endstufe zugeführt, die das Zündrelais beeinflußt.

Abbildung 18 zeigt die Gesamtanordnung mit dem Gefäß LMB 1 (links) und (rechts) den Metallteil des Gefäßes ohne Isolierstoff-Zylinder. Die

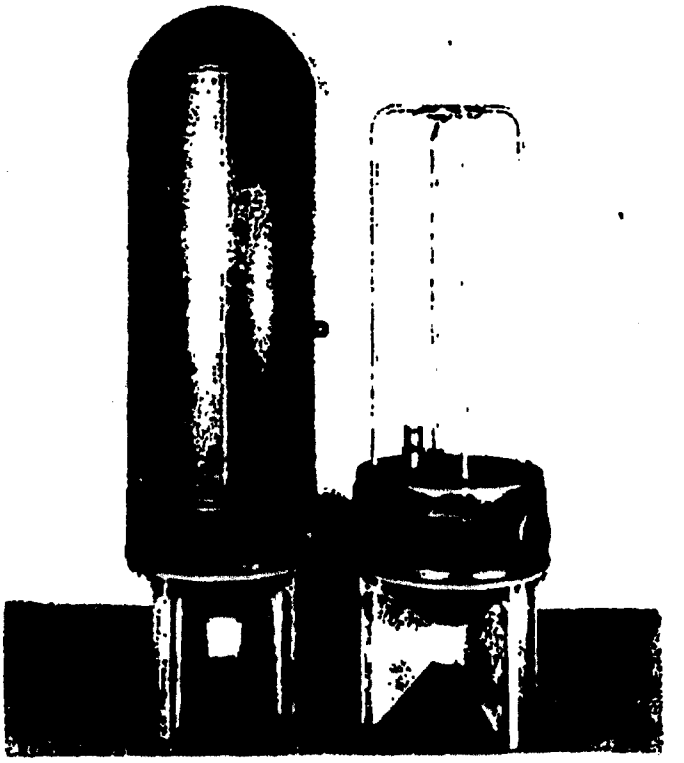

Abb. 18
Zündgerät Wellensonde — Einbau in die Fallschirmkanne