PHOTOGRAPH THIS SHEET

A951 748

DTIC ACCESSION NUMBER

LEVEL

1

INVENTORY

WAL 401/68-8

MARCH 1952

DOCUMENT IDENTIFICATION

DISTRIBUTION STATEMENT A

Approved for public release;
Distribution Unlimited

DISTRIBUTION STATEMENT

ACCESSION FOR		
NTIS	GRA&I	☑
DTIC	TAB	☐
UNANNOUNCED		☐
JUSTIFICATION		
1952 PER LETTER		
BY		
DISTRIBUTION /		
AVAILABILITY CODES		
DIST	AVAIL AND/OR SPECIAL	
A		

DISTRIBUTION STAMP

UNANNOUNCED

DTIC
ELECTE
JUN 1 1982
S D
B

DATE ACCESSIONED

DTIC COPY INSPECTED 2

82 05 25 093

DATE RECEIVED IN DTIC

PHOTOGRAPH THIS SHEET AND RETURN TO DTIC-DDA-2

DTIC FORM OCT 79 70A

DOCUMENT PROCESSING SHEET

DISCLAIMER NOTICE

THIS DOCUMENT IS BEST QUALITY PRACTICABLE. THE COPY FURNISHED TO DTIC CONTAINED A SIGNIFICANT NUMBER OF PAGES WHICH DO NOT REPRODUCE LEGIBLY.

RESEARCH AND DEVELOPMENT OF EFFECT OF RANGE OF STRESS AND PRESTRAIN ON THE FATIGUE PROPERTIES OF TITANIUM AND ITS ALLOYS

INTERIM REPORT

PREPARED BY

CARNEGIE INSTITUTE OF TECHNOLOGY

FOR

OFFICE CHIEF OF ORDNANCE
RESEARCH AND DEVELOPMENT BRANCH

UNDER

CONTRACT NO. DA-36-061-ORD-68

MARCH 1952

AL 195174

CARNEGIE INSTITUTE OF TECHNOLOGY

AND

OFFICE CHIEF OF ORDNANCE, RESEARCH AND DEVELOPMENT BRANCH

Contract No. DA-36-061-ORD-68

WAL Report No: 401/68-8 Priority: DO-X1

Title of Project

RESEARCH AND DEVELOPMENT OF EFFECT OF RANGE OF STRESS AND PRESTRAIN ON THE FATIGUE PROPERTIES OF TITANIUM AND ITS ALLOYS

Object

To report on the construction and calibration of two fatigue testing machines.

Summary

Two fatigue machines were constructed for the study of the effect of range of stress and prestrain on titanium and titanium alloys. The machines are identical in design with a machine previously designed and constructed by the Department of Civil Engineering of Carnegie Institute of Technology. The machines of the rotating-beam type are readily assembled and operated. A full range of loading from pure tension to pure bending in any combination can be obtained. The machines have been calibrated for both static and dynamic loading and proved adequate throughout their operative range.

Conclusion

The machines are fully described, and calibration data are summarized in tables and graphs. Working formulas and a nomographic chart bring the analysis of combined stresses into convenient form for use in the laboratory.

A REPORT ON THE CONSTRUCTION AND CALIBRATION OF TWO FATIGUE TESTING MACHINES

BY

CARNEGIE INSTITUTE OF TECHNOLOGY

PITTSBURGH, PENNSYLVANIA

MARCH 1, 1952

CONTENTS

	Page
Introduction	1
Synopsis	1
Acknowledgements	2
Description of Machine	2
Details of Construction and Design	4
Calibration of Fatigue Machine	5
Operation Curves	8
Correction Factors	9
Summary and Conclusions	10
Appendix A - Development of Formula for Combined Bending and Tension	11
Appendix B - Notation	12

LIST OF FIGURES

Figure

1 Schematic Drawing of Fatigue Machine

2 Section View of Connections of Specimen, Chuck, and Shaft

3 Section View of Bearing Housing

4 Calibration Specimen

5 Stress Strain Curve for Assembly Specimen

6 Results of Static Calibration Test in Pure Tension (Machine No 1)

7 Results of Static Calibration Test in Pure Tension (Machine No 2)

8 Results of Static Calibration Test in Pure Bending (Machine No 1)

9 Results of Static Calibration Test in Pure Bending (Machine No 2)

10 Curves From the Oscillograph Showing the Strain in the Specimen Under Repeated Loading for Machine No 1

11 Curves From the Oscillograph Showing the Strain in the Specimen Under Repeated Loading for Machine No 2

12 Curves of M_o, T_o, Plotted Against Stress Ratio

13 Nomograph for the Solution of Equation (3)

14 Moment Diagram for Specimen and Shaft Assembly

15 Photograph of Fatigue Machine

LIST OF TABLES

Table

1 Strain Gage Calibration Data

2 Calibration of Fatigue Machine No 1 Pure Tension

3 Calibration of Fatigue Machine No 2 Pure Tension

4 Calibration of Fatigue Machine No 1 Pure Bending

5 Calibration of Fatigue Machine No 2 Pure Bending

6 Calibration of Fatigue Machine No 1 Varying Bending at Constant Tension of 390 lb

7 Calibration of Fatigue Machine No 1 Varying Tension at Constant Bending of 45.5 in-lb

8 Calibration of Fatigue Machine No 2 Varying Bending at Constant Tension of 380 lb

9 Calibration of Fatigue Machine No 2 Varying Tension at Constant Bending of 56 in-lb

10 Correction Factors

A REPORT ON THE CONSTRUCTION AND CALIBRATION OF TWO FATIGUE TESTING MACHINES

INTRODUCTION

Synopsis.—Two testing machines of the rotating-beam type, described in this report, are in operation to study the effect of range of stress and prestrain on the fatigue strength of titanium and titanium alloys. The machines were made at Carnegie Institute of Technology in all essentials like an earlier machine designed and built as part of a doctoral program of research in civil engineering at Carnegie by Chao-Lin Chang in 1950-51.* The testing machines are described in detail in this report.

The main features of the machines are that specimens 1/4 in. in diameter can be subjected to a full range of loading from pure tension to pure bending in any combination, and that changes in loading can be made while the test is in progress. The machines have been calibrated for both static and dynamic operation and proved adequate throughout their operative range.

The machines are fully described, and calibration data are summarized in tables and graphs. Working formulas and a nomographic chart bring the analysis of combined stresses into convenient form for use in the laboratory.

This project is under the technical supervision of the Applied Mechanics Branch of the Watertown Arsenal Laboratories.

---

*Chang, Chao-Lin, "Effects of range of stress and low temperature on fatigue of metals—Background and apparatus". Thesis submitted to the department of civil engineering in partial fulfillment of the requirements of the degree Doctor of Science, Carnegie Institute of Technology, June 1952.

Acknowledgements.--Dr. Elio D'Appolonia, assistant professor of civil engineering, is project supervisor. Assisting him in detail work are James P. Romauldi and Richard J. Magner, civil engineering students, and Joseph J. Wolfe and Claude Argall, mechanicians in the department.

Dr. Charles F. Peck, Jr., assistant professor of civil engineering, and Dr. Frederic T. Mavis, head of the civil engineering department advised on the design and construction of the testing equipment and on matters related to the research as a whole.

DESCRIPTION OF MACHINE

Stresses are induced in the specimen by loads that produce tension and bending. Alternating stresses, varying from complete reversal to pure tension, can be developed by varying the magnitudes of the axial and bending stresses.

The testing machine is shown in Fig. 1. The shaft, or rotating beam, consists of the specimen; two chucks, C_1 and C_2; and the two shafts, S_1 and S_2.

The shaft is supported by the two bearing housings, H_1 and H_2, and driven by the motor D, through a flexible coupling. The housings, pivoted at P_1 and P_2, are free to rotate about axes perpendicular to the plane of loading. They are supported by two vertical tension arms, T_1 and T_2, attached to the main chassis by pivots P_3 and P_4.

Bending stresses are produced in the specimen by the weight W_1 that is connected to the arms M_1 and M_2 by the nylon string A_1. The vertical arms are securely fastened to the bearing housings. Since the housings are free

to rotate about the horizontal pivots, P_1 and P_2, the bending moment due to the weight W_1 is resisted solely by the specimen. The length of the moment arm is 12 inches and the bending moment produced in the specimen due to the weight W_1 is 24 W_1 (in-lb). Tests carried out on the machine show that the effect of the flexible coupling in offering resistance to this moment is negligible.

When the specimen breaks the arms M_1 and M_2 are drawn together bringing the adjustable arm G into contact with the micro-switch F to shut off the motor. The arm G also prevents the specimen from striking the chassis after fracture.

Tension is applied to the specimen by the weight W_2. Because the bar T_2 is free to rotate about the pivot P_4, the pull in the cable A_2 is resisted by the tension in the specimen. This tension is transmitted to the arms through thrust bearings in the housings. The bar T_1 is held fixed to the chassis by the turn-buckle B.

The pivot P_4 can be moved longitudinally along the chassis so that specimens of various lengths can be tested. After a specimen has been mounted further movement of this pivot is prevented by the stop nut E that is drawn up tight against the chassis. The stop rod R checks the swing of bar T_2 after the specimen breaks, but it offers no resistance to movement of bar T_2 while the specimen is still intact.

The cable A_2 and the pulleys P_5 and P_6 form a system with a mechanical advantage of two, hence the force tending to draw the bottom of the arms T_1 and T_2 together is $2W_2$. The pivots, P_3 and P_4, divide the vertical tension

arms into a ratio of 8:1 and, therefore, the tensile force in the specimen, due to the weight W_2, is $16W_2$ (lb).

The motor is 1/2-hp, single phase, 155-v, a-c, 1800 rpm. It is connected in series with the micro-switch and an electric clock that runs and stops with the motor. The total number of revolutions that the specimen has undergone can be computed by multiplying the difference in time, in minutes, from the start of the experiment to fracture, by 1800 rpm.

DETAILS OF CONSTRUCTION AND DESIGN

The design of the chucks that are used to attach the specimen to the shaft was based on the following considerations:

(1) Specimens should be installed and removed readily.

(2) Specimens must be in proper alignment during a test.

(3) Threads should not be depended upon for longitudinal alignment.

The connection of specimen, chuck, and shaft is illustrated in Fig. 2. The chuck has a straight collar which is machined to fit the shaft beyond the threaded section. Thus when the shaft is pulled the alignment is not dependent on the threads but on the sliding collar. The specimen is tapered at both ends and is aligned in the chuck by an inside tapered split nut. The specimen is kept in place by the tensile pull through the assembly and the 60° center-point on the shaft which bears on the specimen as shown.

Thrust is transmitted from the bearing housing to the shaft by a radial-thrust bearing in the housing. This arrangement is shown in Fig. 3. Moment is transmitted to the shaft by the radial reactions of the thrust bearing and

a radial bearing. The reaction of these two bearings on the housing form a couple with a moment equal to the external moment exerted by the weight W_1 and the arms M_1 and M_2.

To avoid operating the machine through resonance the natural frequency of the combined shaft and housings was made to be greater than the speed of operation by reducing the span length between the pivot-points P_1 and P_2 and by making the vertical arms and housings of aluminum. Cold-rolled steel was used at all rotating or pivoting joints. The pulleys and housings are designed to permit lateral adjustment. By means of the stop nut E the distance between the chucks can be adjusted to take specimens from one and one-half inches to seven inches in length.

CALIBRATION OF FATIGUE MACHINES

The two machines were calibrated to determine whether appreciable dead load stresses were induced in the specimen when mounted and whether the dynamic effect of rotation produced significant variation in the stresses of the loaded specimen.

Fig. 4 shows the calibration specimen static and dynamic which was subjected to both tests. A square specimen was used because of difficulty in mounting SR-4 strain gages on a round specimen of small radius and because the curving of the strain gages would lead to erroneous readings. Two electric strain gages (SR-4, type A-7) were attached to two opposite faces of the specimen. Strain in the specimen was determined by means of strain measuring apparatus.

The strain gages were first calibrated on the specimen which was subjected to loads in a standard testing machine. Tensile loads were applied to the specimen and chucks that were held by a ball and socket arrangement to insure axial loading. Results of this test are shown in Table 1 and the stress strain curve for the assembly is shown in Fig. 5. An apparent modulus for the steel specimen assembly of 32.14×10^6 psi was obtained. This modulus was used during the calibration tests to convert strain to stress for different applied loads on the machine.

The static tests were made with the specimen in pure bending, pure tension, and combined bending and tension.

The pure tension tests were conducted by applying loads W_2, (Fig. 1) in increments to a total load of 45.5 pounds (including weight of hanger). The results of these tests are shown in Tables 2 and 3 wherein the average strain for the two strain gages was converted to applied load by use of the apparent modulus. The tensile pull in the specimen is plotted as ordinate and the corresponding weight W_2 as abscissa in Figs. 6 and 7 for machines 1 and 2 respectively. Both calculated and observed functions are plotted.

The pure bending tests were conducted by applying loads W_1, (Fig. 1) until a total load of three pounds was reached. This corresponds theoretically to a moment in the specimen of 72 in-lb. Results of these tests are shown in Tables 4 and 5 wherein the average strain is converted to the applied bending moment by use of the apparent modulus. Figs. 8 and 9 show bending moment as ordinate and corresponding weight W_1 as abscissa for machines 1 and 2 respectively. Both calculated and observed functions are plotted.

Under combined bending and tension there is a counter-action between the tensile and bending loads. In Appendix A there is developed a method whereby a correction is made for this counter-action.

Tests of combined bending and tension were conducted at a constant mean stress level and at varying mean stress levels. That is, for the first series of tests the tensile load was held constant and the bending load was varied. For the second series of tests a constant bending load was applied and the tensile load was varied. The results of these tests are shown in Tables 6, 7, 8, and 9. In each test one gage was on the compression side and one on the tension side of the specimen. The gages were then reversed and the test was repeated for the same loading. Thus there were two readings each for the maximum and minimum strains. These strains were averaged and the maximum and minimum stresses were computed therefrom by use of the apparent modulus. These values are shown in Tables 6, 7, 8, and 9 along with the values as computed by the method developed in Appendix A. Good agreement is noted between these values.

Tests were conducted to determine whether there was any dynamic effect on the stress due to the rotation of the specimen and the vibration of the machine. For this purpose a plot of the strain in the specimen was obtained on an oscillograph. Strains were not measured quantitatively from the plotted curves since the machine had already been calibrated statically. Hence it was only necessary to compare the peak readings on the curve, or the maximum strain, when the machine was turned slowly by hand and when it was rotated by the motor.

The strain gages and the oscillograph were connected by mounting slip-rings on the chucks. These were insulated from the chucks by a layer of rubber tape. The leads from the strain gages were connected to the slip-rings and in turn contact with the leads from the oscillograph was made through brass brushes with carbon tips.

Different combinations of bending and tensile loads were tested. From Figs. 10 and 11, which show the charts from the oscillograph, it is evident that the maximum strain in the specimen is the same when the shaft is turned by hand or by motor.

OPERATION CURVES

It is often desirable to conduct a series of tests for a S-N diagram at certain fixed values of r (ratio of minimum to maximum stress) when the specimens are being tested under combined bending and tension. Also, most established criteria for the construction of a range of stress diagram require values of the endurance limit at $r = -1$ and $r = o$.

The formula developed in Appendix A for the corrected moment in combined bending and tension is:*

$$M' = \frac{M_o}{1 + T_o/2300} \qquad (1)$$

The maximum and minimum stresses are given by:

$$S = \frac{T_o \pm \frac{8 M'}{d}}{A} \qquad (2)$$

---

*Refer to Appendix B for meaning of symbols.

and for a 0.25 inch diameter specimen

$$S = 20.4\ T_o \pm \frac{653\ M_o}{1 + T_o/2300} \qquad (3)$$

Thus for any combination of M_o and T_o the maximum and minimum stresses can be calculated directly.

In order to conduct a test at a fixed value of r, the values of M_o and T_o in equation (3) would have to be adjusted prior to the testing of each specimen. The use of equation (3) for this would be laborious and time-consuming. To overcome this difficulty the chart Fig. 12 and the nomograph Fig. 13 have been prepared. Thus for values of r and S_{max} the resulting values of M_o and T_o can be readily determined.

CORRECTION FACTORS

The numerical constants in equation (3) are developed on the basis that the diameter of the specimen is 0.250 inches. Table 10 shows correction factors which take into account small variations in the diameter of specimens as machined. The factors are applied to the values of M_o and T_o that are to be substituted in equation (3).

TABLE 10 CORRECTION FACTORS

DIAMETER	T_o	M_o
0.248	0.985	0.976
0.249	0.992	0.985
0.250	1.000	1.000
0.251	1.008	1.013
0.252	1.014	1.023

Machining specifications allow a tolerance of $\pm$ 0.001 inches; hence, with the use of the correction factors, no appreciable error in the computed stress is introduced by small changes in the diameter of the specimen.

SUMMARY AND CONCLUSIONS

Fatigue machines for the study of the effect of range of stress and prestrain on titanium and titanium alloys were constructed. The machines are identical in design with a machine previously designed and constructed by the Department of Civil Engineering of Carnegie Institute of Technology. The machines are of the rotating-beam type and are easily assembled and maintained. Dynamic calibration tests showed that the limits of stress in the specimen rotated by the motor at 1800 rpm are the same as the limits of stress when the specimen is rotated slowly by hand. The static calibration tests showed

(1) That the calculated and observed stresses in pure bending and pure tension agree closely when the apparent modulus, as obtained from the strain gage calibration, is used.

(2) That the calculated and observed stresses in combined bending and tension agree when formula (3) is used to correct for the counteracting moment produced by the tensile load.

Operation curves involving M_o, T_o, r, and S_{max} were developed to facilitate testing procedure. Correction factors were determined to take into account slight changes in the diameter of the specimen.

The machines fulfill the desired functions and specifications called for in their design and are satisfactory for an investigation on the effect of range of stress and prestrain on the fatigue properties of a metal.

APPENDIX A

Under loads of combined bending and tension, the maximum stress is

$$S = \frac{T_o + 8\ M'/d}{A} \qquad (4)$$

The part of the stress due to bending depends both on the moment M_o and the moment due to T_o, that is

$$M' = M_o - T_o\ \Delta_o \qquad (5)$$

For the shaft assembly shown schematically in Fig. 14(A) the center deflection with an error of less than 1% is given by

$$\Delta_o = \frac{M_o}{C + T_o} \qquad (6)$$

where

$$C = \frac{8\ E\ L_o}{L_o\ (2L - L_o)}.$$

Substituting (6) into (5) the expression for the maximum bending moment becomes

$$M' = \frac{M_o}{1 + T_o/C} \qquad (7)$$

Using the numerical values of length and moment of inertia shown in Fig. 14(A) the equation for the maximum stress in the steel specimens that were used for the calibration is

$$S = 20.4\ T_o + \frac{653\ M_o}{1 + T_o/2300}$$

APPENDIX B

NOTATION

The following symbols are arranged in the order in which they first appear in the report:

S-N Diagram	Diagram showing nominal stress at failure as ordinates and corresponding number of cycles as abscissas.
r	Ratio of minimum stress to maximum stress.
M'	Corrected bending moment in a specimen under combined bending and tension.
M_o	Bending moment due to the applied load W_1 (Fig. 1).
M_T	Bending moment due to applied load W_2 (Fig. 1).
T_o	Total tensile stress due to the applied load W_2 (Fig. 1).
S	Unit stress.
S_{max}	Maximum unit stress.
S_{min}	Minimum unit stress.
I	Moment of inertia of cross-section about centroidal axis.
c	Distance from the neutral axis to the outermost fiber.
d	Diameter of the specimen.
A	Cross-sectional area of the specimen.
Δ	Deflection.

WATERTOWN ARSENAL
WATERTOWN, MASS.
LABORATORY
INDEXED

NOTE:-This form is to be executed to show proposed distribution, and forwarded in triplicate to the Chief of Ordnance for prior approval of all distributions. Proposed distribution to agencies or individuals whose official interest in the report is not obvious must be justified by explanatory statements on the back of this form.

BINDING AREA FORM NO. ORDBE-342L. (Rev.) 2 Sept. 1947 *BINDING AREA*

COPIES PREPARED 8

WATERTOWN ARSENAL
TECHNICAL REPORT DISTRIBUTION

EXTRA COPIES REMAINING

REPORT NO. 401/68-8 TITLE: Carnegie I. of Tech. DA ... 68
Interim report. March 1952.

TO:	NO. OF COPIES	DATE OCO APPROVAL	DATE SENT	TO:	NO. OF COPIES	DATE OCO APPROVAL	DATE SENT
WATERTOWN ARSENAL-ORDBE				OTHER:			
Laboratory File	1						
Author: Dr. Beerwker	2	#2/3					
OFFICE, CHIEF OF ORDNANCE							
ORDIR-Artillery							
ORDIM-Ammunition							
ORDIT-Automotive							
ORDIS-Small Arms							
ORDTB-Res . & Materials							
ORDTM-Ammunition Dev.							
ORDTR-Artillery Dev.							
ORDTS-Small Arms Dev.							
ORDTT-Tank Automotive							
ORDTU-Rocket Dev.							
ORDTX-Executive							
ORDTX-AR - Executive Library	1						
ORDNANCE DEPARTMENT AGENCIES							
ORDBA-Frankford Arsenal							
ORDBB-Picatinny Arsenal							
ORDBC-Rock Island Arsenal							
ORDBD-Springfield Armory							
ORDBF-Watervliet Arsenal							
ORDBG-Aberdeen Prov. Ground							
ORDJR-Raritan Arsenal							
ORDMY-Detroit Arsenal							

APPROVING AUTHORITY:
Ltr.:
Date:
From:

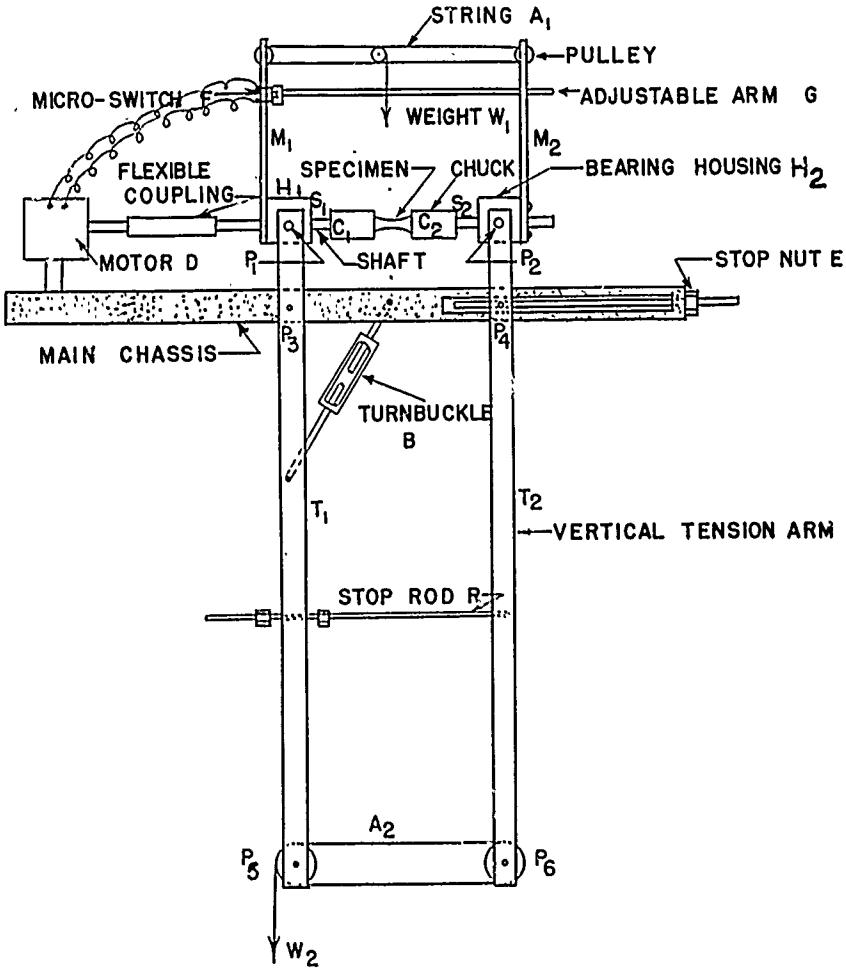

FIG I SCHEMATIC DRAWING OF FATIGUE MACHINE

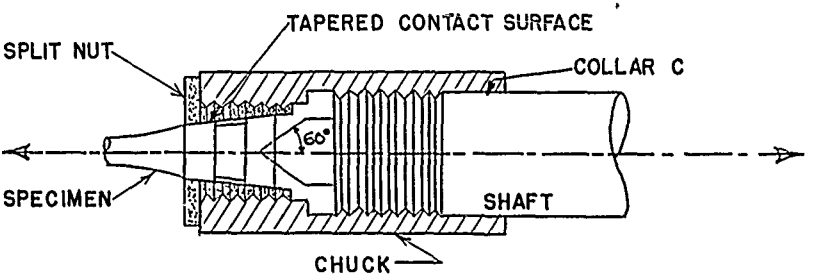

FIG 2 SECTION VIEW OF CONNECTIONS OF SPECIMEN, CHUCK, AND SHAFT

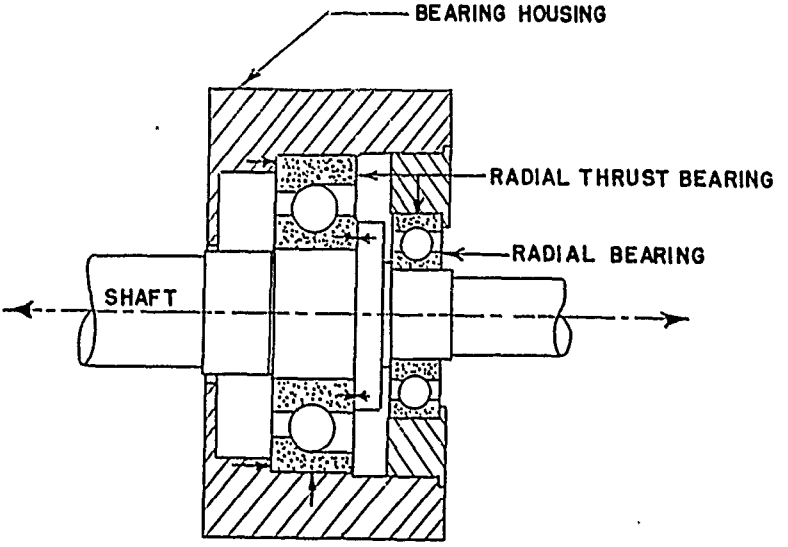

FIG 3 SECTION VIEW OF BEARING HOUSING

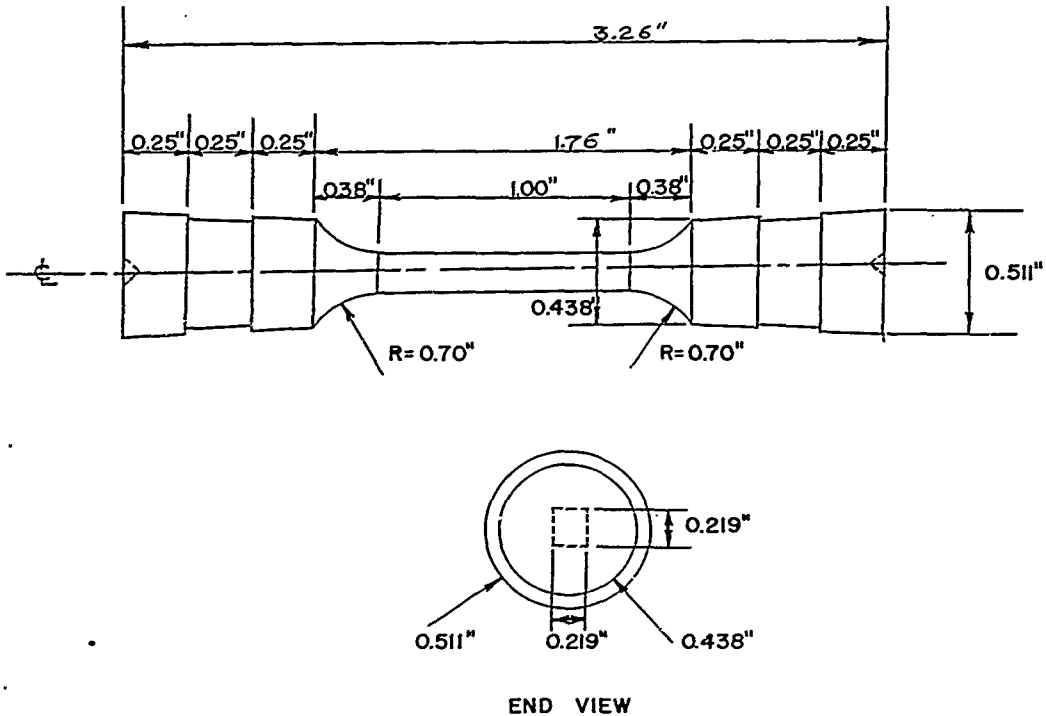

FIG 4 CALIBRATION SPECIMEN

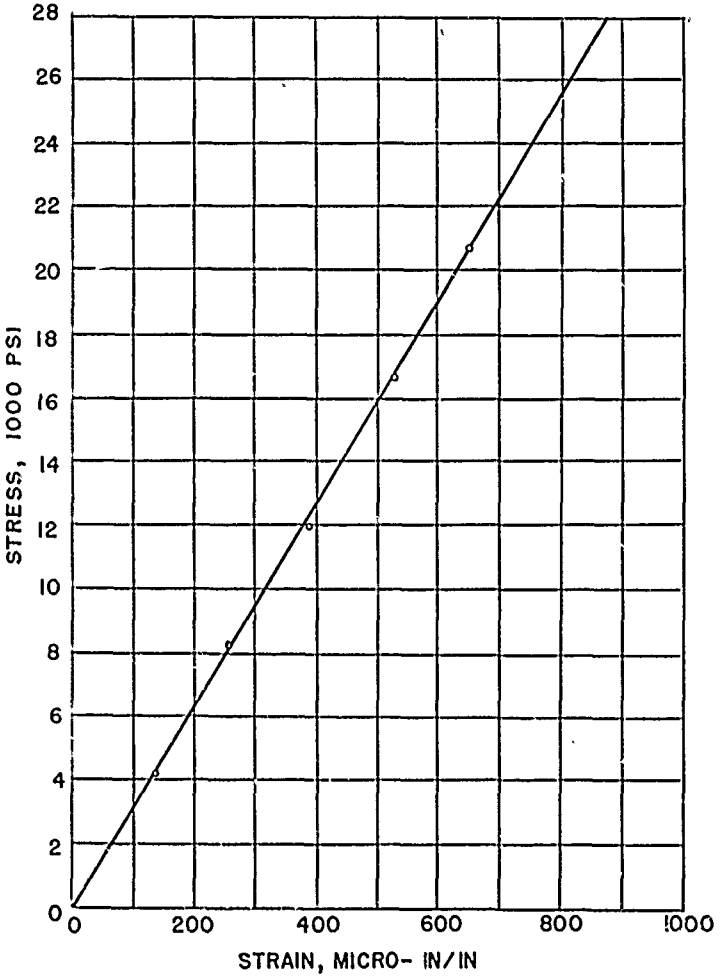

FIG. 5. STRESS-STRAIN CURVE FOR SPECIMEN ASSEMBLY

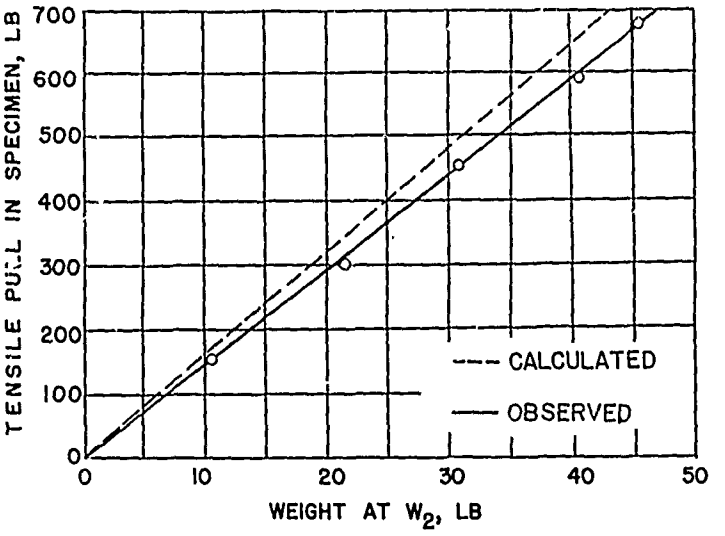

FIG 6 RESULTS OF STATIC CALIBRATION TEST IN PURE TENSION (MACHINE NO 1)

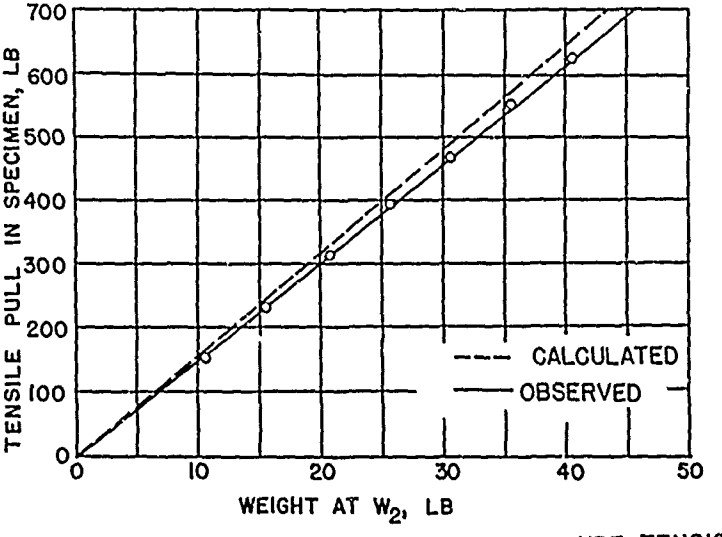

FIG 7 RESULTS OF STATIC CALIBRATION TEST IN PURE TENSION (MACHINE NO 2)

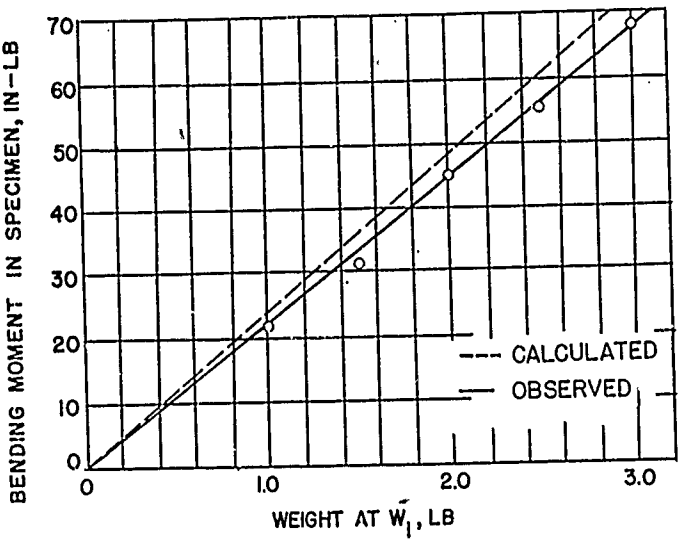

FIG 8 RESULTS OF STATIC CALIBRATION TEST IN PURE BENDING (MACHINE NO 1)

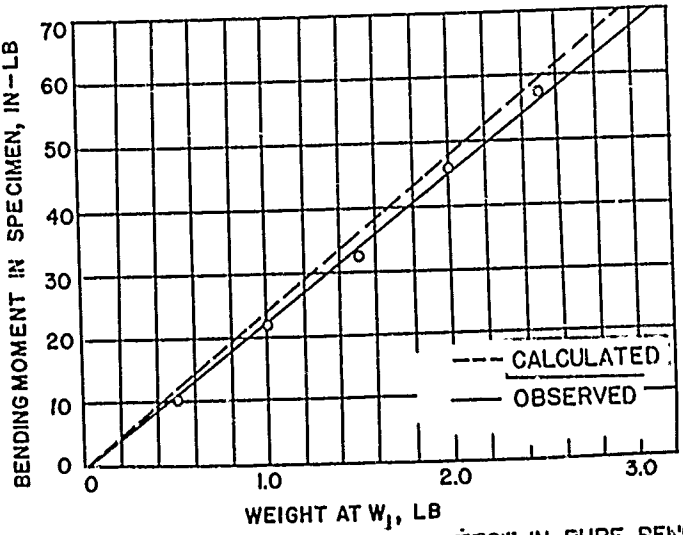

FIG 9 RESULTS OF STATIC CALIBRATION TEST IN PURE BENDING (MACHINE NO 2)

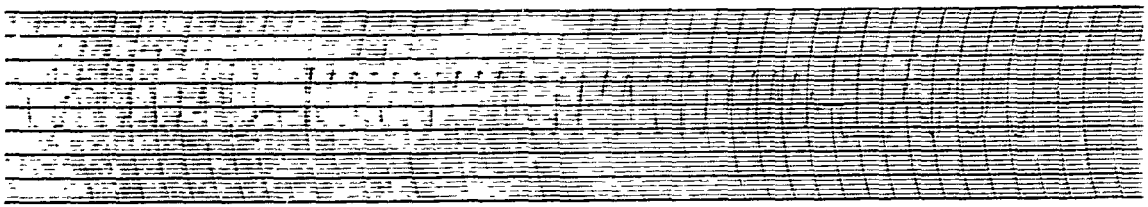

(A) NO LOAD ON MACHINE

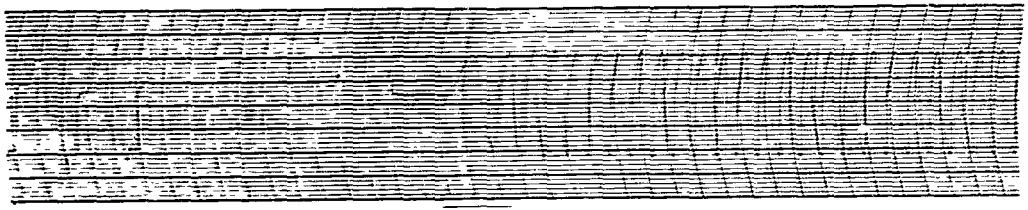

(B) $S_{MAX} = 32{,}100$ PSI $S_{MIN} = -19{,}900$ PSI

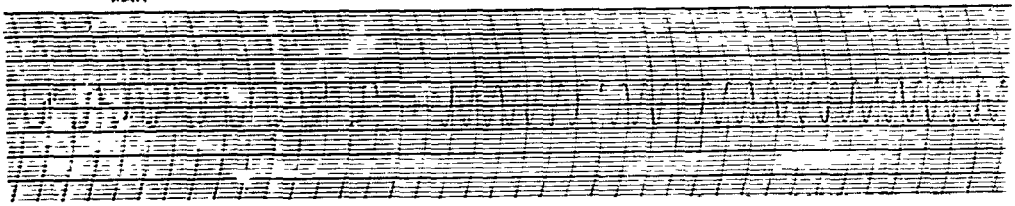

(C) $S_{MAX} = \pm 29{,}000$ PSI

FIG. 10. CURVES FROM THE OSCILLOGRAPH SHOWING THE STRAINS IN THE SPECIMEN UNDER REPEATED LOADING IN MACHINE NO I

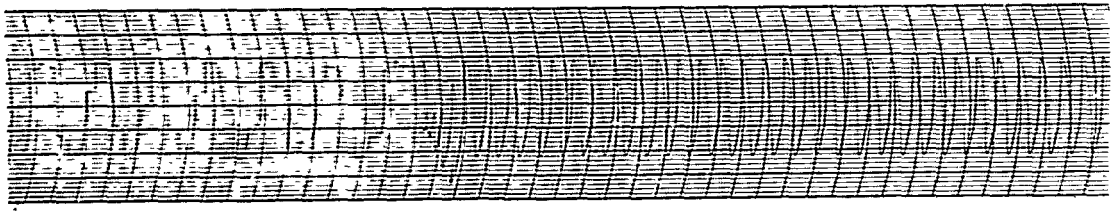

(A) $S_{MAX} = 47{,}600$ PSI $S_{MIN} = -35{,}400$ PSI

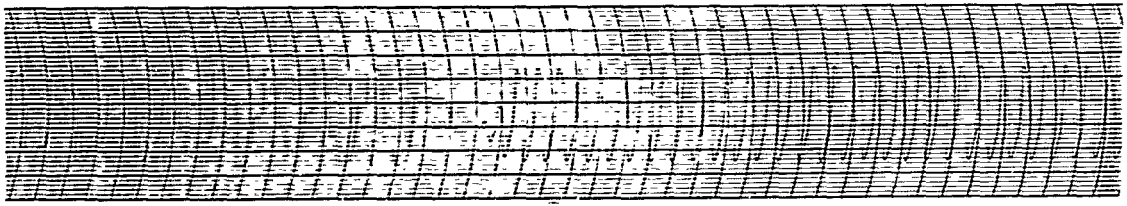

(B) $S_{MAX} = 32{,}000$ PSI $S_{MIN} = -19{,}900$ PSI

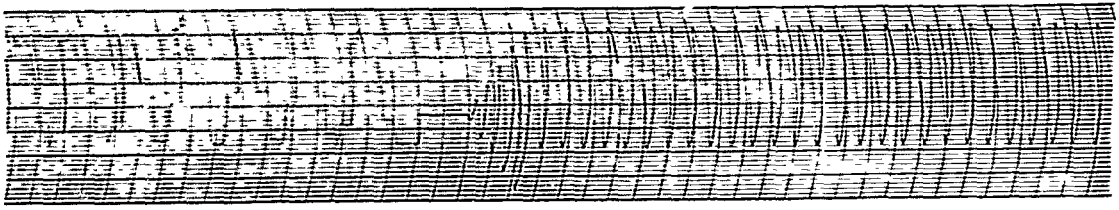

(C) $S_{MAX} = \pm 29{,}000$ PSI

FIG 11 CURVES FROM THE OSCILLOGRAPH SHOWING THE STRAINS IN THE SPECIMEN UNDER REPEATED LOADING IN MACHINE NO 2

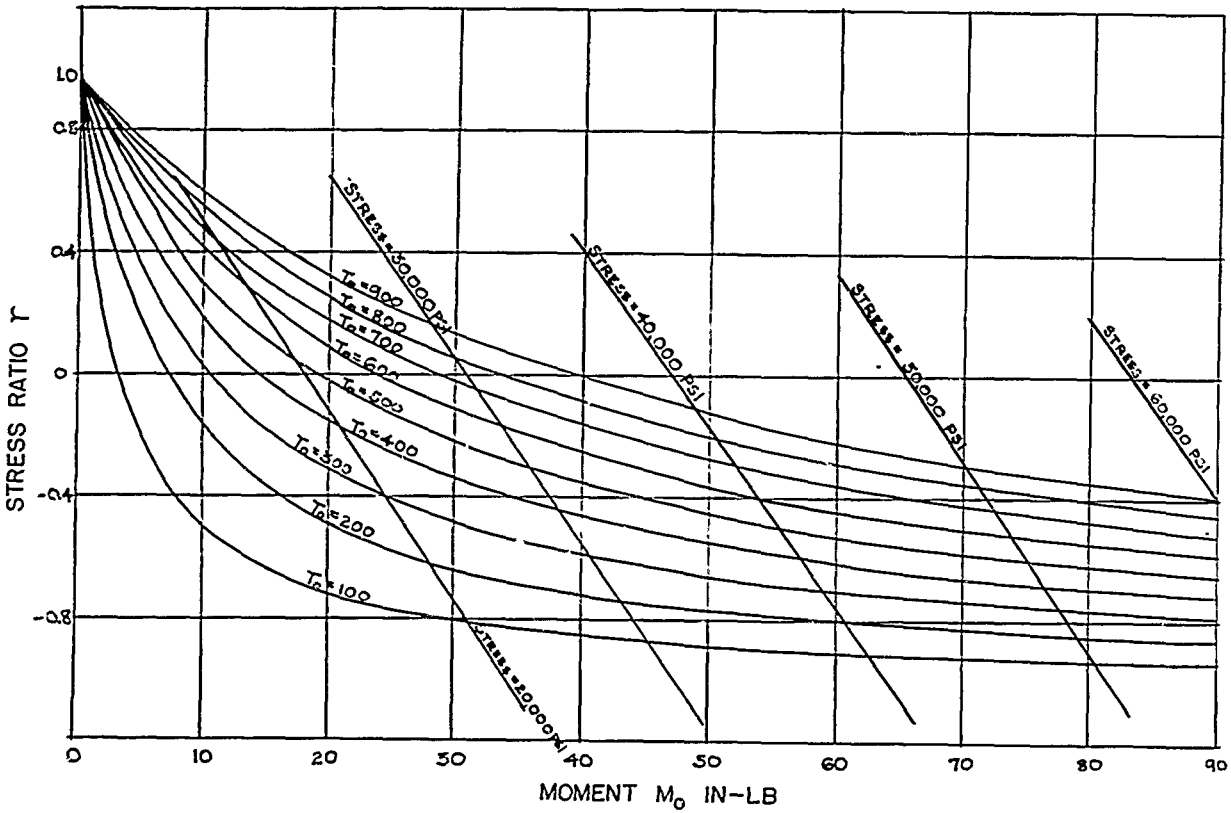

FIG 12 CURVES OF M_0 T_0 PLOTTED AGAINST STRESS RATIO

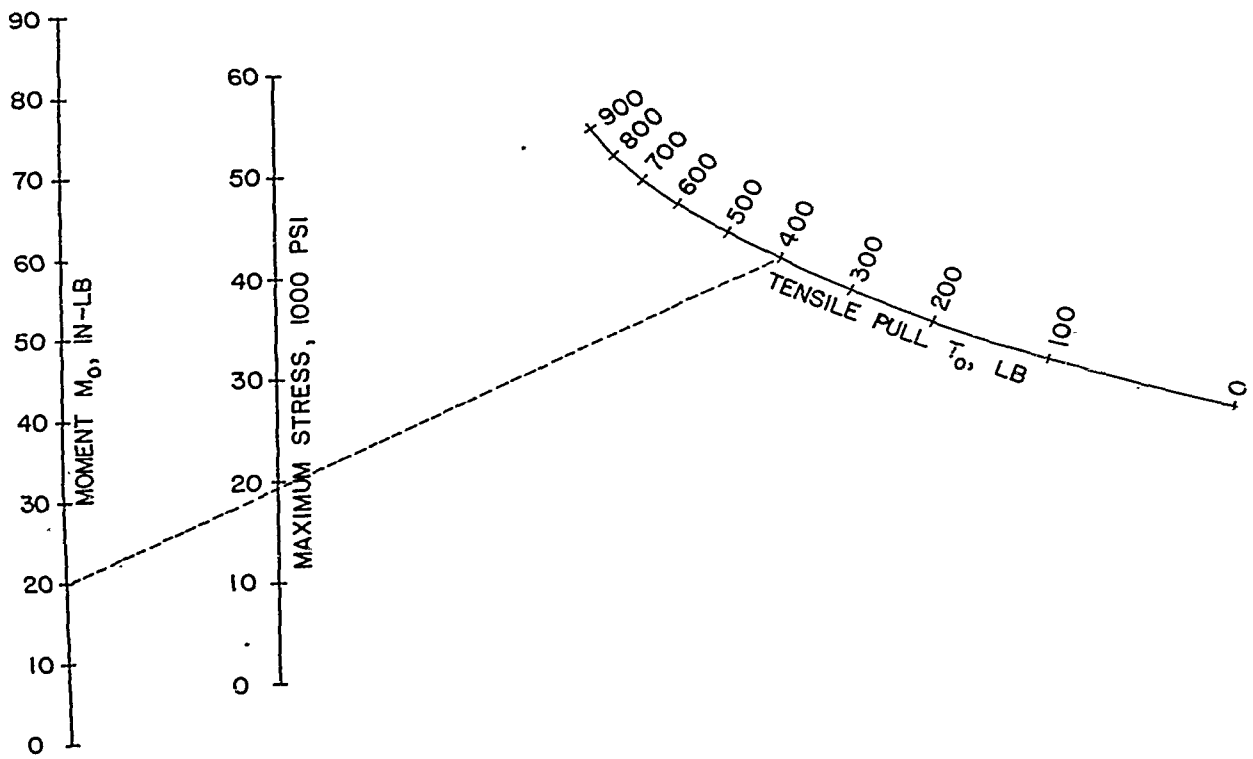

FIG 13 NOMOGRAPH FOR THE SOLUTION OF EQUATION (3)

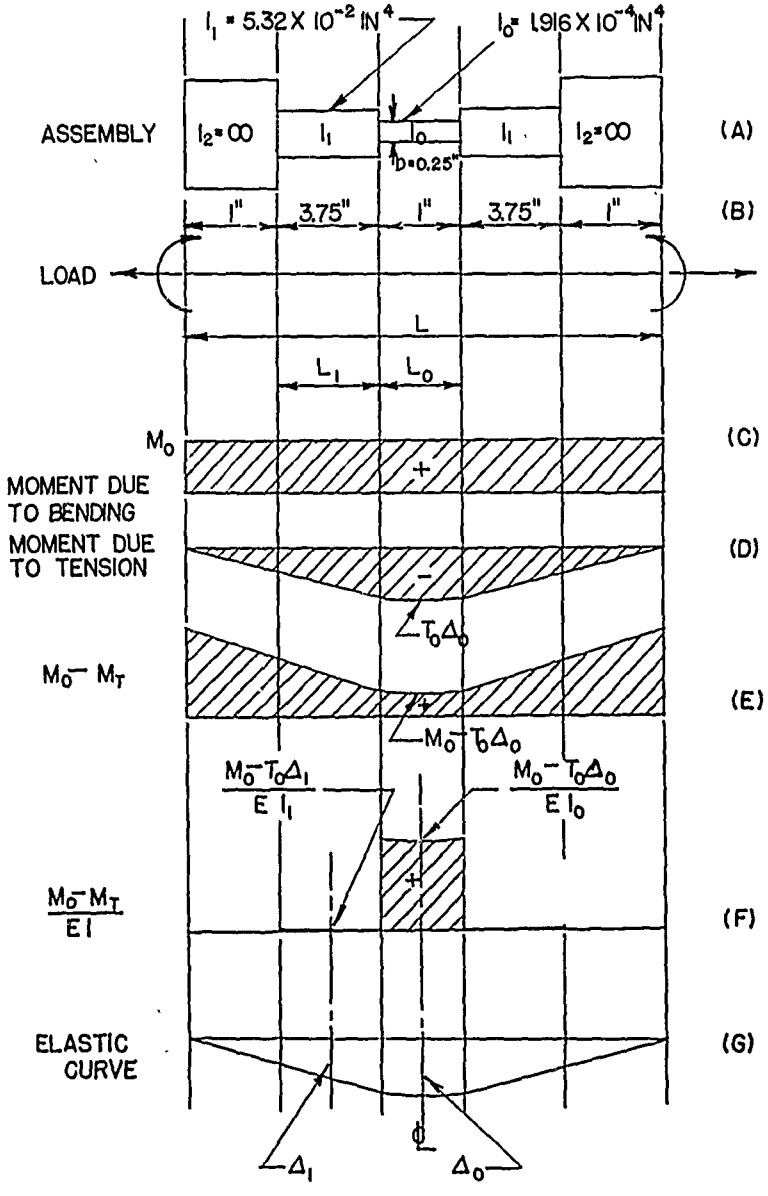

FIG 14 MOMENT DIAGRAM FOR SPECIMEN AND SHAFT ASSEMBLY

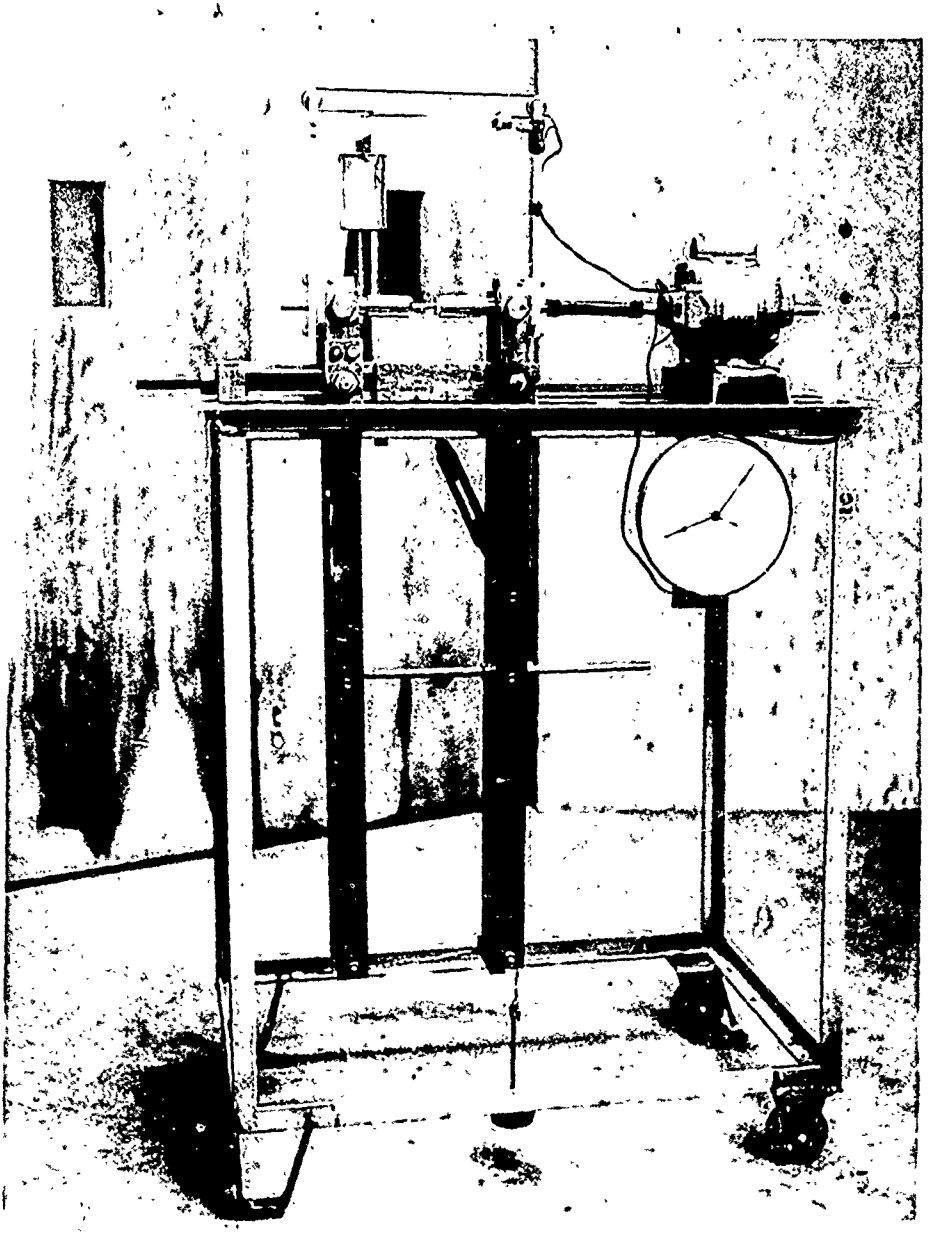

Fig. 15 Fatigue Machine

TABLE 1 STRAIN GAGE CALIBRATION DATA

Machine Load (lb)	Stress (psi)	Gage I* (micro-in)	Gage II* (micro-in)	Average Strain (micro-in/in)	Measured Load (lb)
0	0	0	0	0	0
200	4175	152	109	130.5	187.4
400	8350	274	251	262.5	377.0
600	12520	428	359	393.5	565.0
800	16700	561	491	526.0	755.3
1000	20870	649	665	657.0	943.5

TABLE 2 CALIBRATION OF FATIGUE MACHINE NO 1 IN PURE TENSION

Machine Load (lb)	Stress (psi)	Gage I** (micro-in)	Gage II** (micro-in)	Average Strain (micro-in/in)	Observed Tensile Load (lb)	Calculated Tensile Load (lb)
0	0	0	0	0	0	0
10.5	3510	121.0	82.0	101.5	155.8	168.0
20.5	6850	228.5	182.5	205.5	315.5	328.0
30.5	10200	332.7	274.5	303.6	466.0	488.0
40.5	13525	453.3	361.0	407.1	625.0	648.0
45.5	15200	504.0	411.0	457.5	702.3	728.0

*Average of four tests
**Average of three tests

TABLE 3 CALIBRATION OF FATIGUE MACHINE NO 2 IN PURE TENSION

Machine Load (lb)	Stress (psi)	Gage I* (micro-in)	Gage II* (micro-in)	Average Strain (micro-in/in)	Observed Tensile Load (lb)	Calculated Tensile Load (lb)
0	0	0	0	0	0	0
10.5	3510	105.3	101.0	103.2	158.4	168.0
20.5	6850	200.0	197.3	198.6	304.8	328.0
30.5	10200	291.0	303.0	297.0	455.9	488.0
40.5	13525	379.3	402.0	390.6	599.6	648.0
45.5	15200	430.0	458.3	444.2	681.8	728.0

TABLE 4 CALIBRATION OF FATIGUE MACHINE NO 1 IN PURE BENDING

Machine Load (lb)	Average Strain in Compression (micro-in)	Average Strain in Tension (micro-in)	Average Strain (micro-in/in)	Observed Moment (in-lb)	Calculated Moment (in-lb)
0	0	0	0	0	0
1.0	383.0	378.0	380.5	21.4	24.0
1.5	589.5	582.0	586.0	32.8	36.0
2.0	811.5	803.0	807.0	45.3	48.0
2.5	1041.5	1034.5	1038.0	58.1	60.0
3.0	1284.5	1278.0	1281.0	72.0	72.0

*Average of three tests

TABLE 5 CALIBRATION OF FATIGUE MACHINE NO 2 IN PURE BENDING

Machine Load (lb)	Average Strain in Compression (micro-in)	Average Strain in Tension (micro-in)	Average Strain (micro-in/in)	Observed Moment (in-lb)	Calculated Moment (in-lb)
0	0	0	0	0	0
1.0	-365.0	372.0	368.5	20.3	24.0
1.5	-551.0	581.0	566.0	31.8	36.0
2.0	-807.0	810.0	808.5	45.3	48.0
2.5	-996.0	1003.0	999.5	56.0	60.0
3.0	-1220.0	1222.0	1221.0	68.5	72.0

TABLE 6 CALIBRATION OF FATIGUE MACHINE NO 1 VARYING BENDING AT CONSTANT TENSION OF 390 LB

	Maximum Strain (micro-in/in)			Minimum Strain (micro-in/in)			Observed Stress (psi)		Calculated Stress (psi)	
M_o	Ave	Diff	Sum	Ave	Diff	Sum	Max	Min	Max	Min
0	4810		---	4760		---	0	0	0	0
		580			-65					
21.7	5390		580	4695		-65	18420	-2060	16720	-2417
		175			-175					
33.5	5565		755	4520		-240	24000	-7600	24470	-8166
		160			-160					
45.5	5725		915	4360		-400	29060	-12700	30310	-14010
		170			-170					
58.0	5895		1085	4190		-570	34460	-18100	36400	-20100
		175			-130					
71.0	6070		1260	4060		-700	40000	-22200	42730	-26430

TABLE 7 CALIBRATION OF FATIGUE MACHINE NO 1 VARYING TENSION AT CONSTANT BENDING OF 45.5 IN-LB

T_o (lb)	Maximum Strain (micro-in/in)			Minimum Strain (micro-in/in)			Observed Stress (psi)		Calculated Stress (psi)	
	Ave	Diff	Sum	Ave	Diff	Sum	Max	Min	Max	Min
0	4815		---	4755		---	0	0	0	0
		910			-705					
160	5735		910	4050		-705	28900	-22400	27610	-20900
		25			-90					
238	5750		935	4140		-90	29690	-19500	28480	-18500
		15			-85					
315	5765		950	4225		-85	30170	-16800	29378	-16200
		20			-80					
390	5785		970	4305		-80	30800	-14300	30312	-14010
		25			-95					
466	5810		995	4400		-95	31600	-11300	31280	-11800
		25			-70					
545	5835		1020	4470		-70	32400	-9050	32166	-9380

TABLE 8 CALIBRATION OF FATIGUE MACHINE NO 2 VARYING BENDING AT CONSTANT TENSION OF 380 LB

M_o	Maximum Strain (micro-in/in)			Minimum Strain (micro-in/in)			Observed Stress (psi)		Calculated Stress (psi)	
	Ave	Diff	Sum	Ave	Diff	Sum	Max	Min	Max	Min
0	3746		---	3660		---	0	0	0	0
		397			124					
10	4143		397	3784		124	12720	3980	12832	3052
		146			-149					
21	4289		543	3635		-25	17400	-800	18209	-235
		166			-163					
31	4455		709	3472		-188	22750	-6040	23098	-7214
		175			-172					
43	4630		884	3300		-360	28400	-11550	28965	-13081
		153			-152					
56	4783		1037	3148		-512	33200	-16400	35320	-19437
		177			-181					
68	4960		1214	2967		-693	39000	-22200	41180	-25300
		-1215			696					
0	3745		-1	3663		3	0	0	0	0

TABLE 9 CALIBRATION OF FATIGUE MACHINE NO 2 VARYING TENSION AT CONSTANT BENDING OF 56 IN-LB

T_o	Maximum Strain (micro-in/in)			Minimum Strain (micro-in/in)			Observed Stress (psi)		Calculated Stress (psi)	
	Ave	Diff	Sum	Ave	Diff	Sum	Max	Min	Max	Min
0	3755		-	3675		-	0	0	0	0
		1038			-820					
152	4793		1038	2855		-880	33200	-26300	33140	-26789
		12			80					
228	4805		1050	2935		-740	33700	-23750	33816	-24286
		23			75					
305	4828		1073	3010		-665	34400	-21350	34554	-21800
		20			80					
380	4848		1093	3090		-585	35100	-18750	35321	-19438
		12			90					
455	4860		1105	3180		-495	35400	-15900	36131	-17113
		15			70					
535	4875		1120	3250		-425	35900	-13600	37040	-14678
		21			80					
610	4896		1141	3330		-345	36600	-11800	37532	-12434
		29			70					
685	4925		1170	3400		-275	37500	- 8830	38856	-10224
		-1170			280					
0	3755		0	3680		5	0	0	0	0