AD A951574

~~RESTRICTED~~

Unc.

Downgraded by auth. Doc. of MIT May 16,

PULSE LENGTH SELECTOR AND MULTIPLE PULSE DECODER

REPORT

917

8327

RADIATION LABORATORY

MASSACHUSETTS INSTITUTE OF TECHNOLOGY

CAMBRIDGE - MASSACHUSETTS

DTIC ELECTE DEC 1 1 1981 S D A

This document has been approved for public release and sale; its distribution is unlimited.

Enclosure B to NRL 1221-866; Folder

81 12 1182

DISCLAIMER NOTICE

THIS DOCUMENT IS BEST QUALITY PRACTICABLE. THE COPY FURNISHED TO DTIC CONTAINED A SIGNIFICANT NUMBER OF PAGES WHICH DO NOT REPRODUCE LEGIBLY.

NRL No. 8327 Title **Pulse Length Selector and Multiple Pulse Decoder** UNCLASSIFIED

Authority Massachusetts Institute of Technology, Radiation Lab., Report No. 917

Classification Changed from [redacted] Restricted by Authority [illegible] to unclas [illegible] MIT May 16, 194

Date 3-21-46 Author R. M. Ashby and L. K. Neher
Date rec'd 3-22-46

Summary or complete title: The circuit diagram and operating characteristics are given for the one-stage pulse-length selector and pulse stretcher which was built to operate with the APX-13 receiver. The concepts involved have been extended to the utilization of the maximum amount of information present in a pulse passed by a receiver of given bandwidth. The extension of these concepts to include multiple-pulse decoder uses is also discussed.

Entries: 1. Radar - sp. types - AN/APX-13 2. Radar - receivers 3. Radar - pulse 4. Pulse - measurements 5. Pulse - circuit 6. Radar - circuits 7. Pulse - voltage

Filed as Rad Lab 917 3-21-46
Copies rec'd 2 copies
Originator's file

Bulletin Entry
R5-Radar

ATT: DR. C LEETON AND CAPT. PRYOR

198 13 pages with diagrams

Accession For
NTIS GRA&I
DTIC TAB
Unannounced
Justification
By
Distribution
Availability Codes
Avail and/or
Dist Special
A 23

DTIC COPY INSPECTED 3

UNANNOUNCED

DTIC

[redacted]

NDRC
Div. 14
OEMsr-262

Radiation Laboratory

Report 917 March 21, 1946

PULSE LENGTH SELECTOR AND MULTIPLE PULSE DECODER

Abstract

The circuit diagram and operating characteristics are given for the one-stage pulse-length selector and pulse stretcher which was built to operate with the AN/X-13 receiver. The concepts involved have been extended to the utilization of the maximum amount of information present in a pulse passed by a receiver of given bandwidth. The extension of these concepts to include multiple-pulse decoder uses is also discussed.

R. M. Ashby
L. K. Neher

Approved by: Leon B. Linford
Leader, Group 44

E. M. Purcell
Head, Division 4

Title page
9 Numbered pages
7 Pages of figures

[redacted]

PULSE LENGTH SELECTOR AND MULTIPLE PULSE DECODER

I. INTRODUCTION

Interference from other radar sets having pulse lengths different from those desired in the output of the APX-13 receiver suggested the possibility of a circuit which would only pass signals of the desired pulse length. The circuit to be described was devised for this purpose. The concepts involved have been extended to the utilization of a maximum amount of information present in a pulse passed by a receiver of given bandwidth. The extension of these concepts to include multiple pulse decoder uses is also discussed.

II. THEORY

A. One Stage Pulse Length Selector, with Rectangular Pulse Input.

The feature which should be distinguished is that the average voltage input suddenly rises from that of noise to a new value of the voltage corresponding to noise plus signal, mtaintains this new value for a definite time, T sec, which we can prescribe, then drops abruptly to its former value. Only under these conditions is an output signal from the selector desired.

In the one-stage pulse-length selector, the fact that the pulse has begun or ended is determined by finding the difference, in input voltage, $V = f(t)$, that occurs in a time interval d sec (where $d \leq T$). Mathematically, this difference voltage, ΔV, is:

$$\Delta V = f(t) - f(t - d) \qquad (1)$$

Electrically this difference is obtained in the output of a shorter transmission line having a one-way delay time of $\frac{d}{2}$ sec and having an input current proportional to $V = f(t)$. A positive pulse of width, d sec, occurs at the terminals of the line, beginning at the beginning of the input pulse, followed by a negative pulse of the same length which begins at the end of the input pulse.

This voltage from the differentiating line is used in two ways: (1) It is inverted and applied to one control grid of the coincidence output tube as shown in Fig. 1b, and (2) it is delayed in time $d_1 = T$ sec by a delay line, as shown in Fig. 1c, and applied to the other control grid of the coincidence tube. This tube is operated so that an output, Fig. 1d, is obtained only if a positive

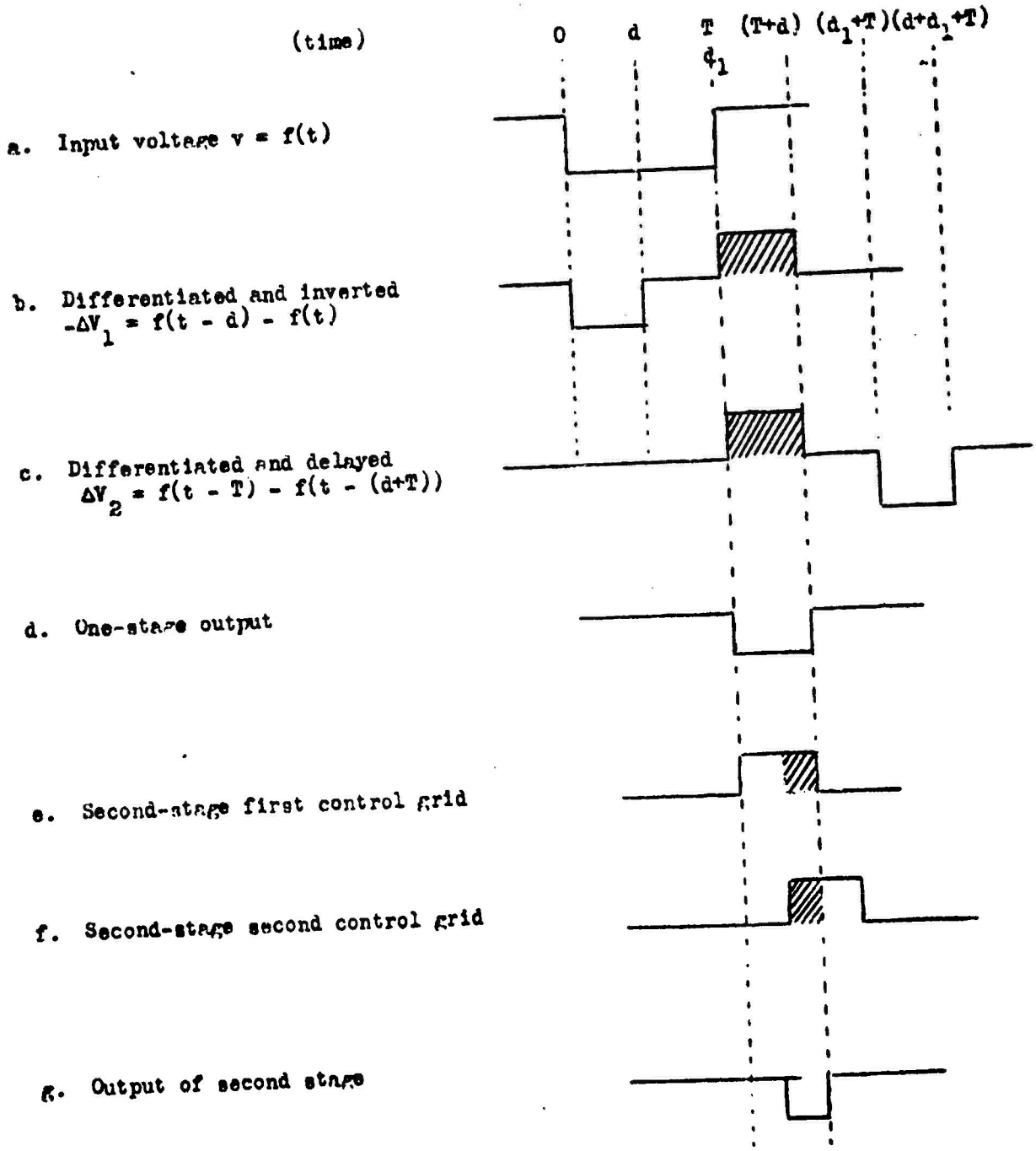

FIG. 1. Wave forms at various points in the pulse-length selector.

voltage is on both control grids simultaneously as indicated by the cross hatched regions in Fig. 1b and 1c. Mathematically the output is given by:

$$V_d = \left| f(t) - f(t-d) \right| \; f(t - T) - f[t - (d + T)]$$

$$\text{When both} \quad -f(t) + f(t - d) > 0 \qquad (2)$$

$$f(t + T) - f[t - (d + T)] > 0$$

otherwise $\qquad V_d = 0$

The output pulse length as a function of input pulse length is shown in Fig. 2a with the differentiation time, d, as a parameter. For most purposes the differentiation time should be $\frac{T}{2}$ sec, since this value uses information from all of the pulse only once. If the differentiation time is shorter than this some of the pulse information from the center of the pulse is not used, resulting in the circuit passing other waveforms equally well. In this case this center region may have any shape whatsoever. If the differentiation time is longer than $\frac{T}{2}$ the circuit uses information from the center region twice* and, most important, again passes undesired pulses unnecessarily. The regions included because of this can be seen from Fig. 2a.

Figure 2 shows that if $d = \frac{T}{2}$ sec., as recommended, the circuit passes pulses having lengths from $\frac{T}{2}$ to $\frac{3T}{2}$ sec. The output pulse length increases linearly with input pulse length from zero, for $\frac{T}{2}$ sec input, to $\frac{T}{2}$ sec output, for T sec input pulse length and decreasing again to zero for pulse input of $\frac{3T}{2}$ sec.

The circuit diagram of a single stage selector with points marked corresponding to the waveforms of Fig. 1 is given in Fig. 3. For some applications the selection characteristic of this single stage discriminator may be adequate, while for others more accurate selection may be desired.

B. <u>More Accurate Pulse-Length Selection.</u>

More accurate pulse-length selection may be accomplished by adding a second stage of selection to the single stage described above. The components of this second stage should be scaled so that it selects pulses of length $\frac{T}{2}$ sec. Output from the second stage would be obtained for input pulses to the second stage of lengths from $\frac{T}{4}$ to $\frac{3T}{4}$ sec. The overall pulse-pass characteristic for the two

* If the differentiation time d = T sec then two of the quantities of Eq. (2) can be seen to be identical. Similarly it can be shown by drawing figures like 1b and 1c that each control grid uses some of the same information as the other if $d > T_2$.

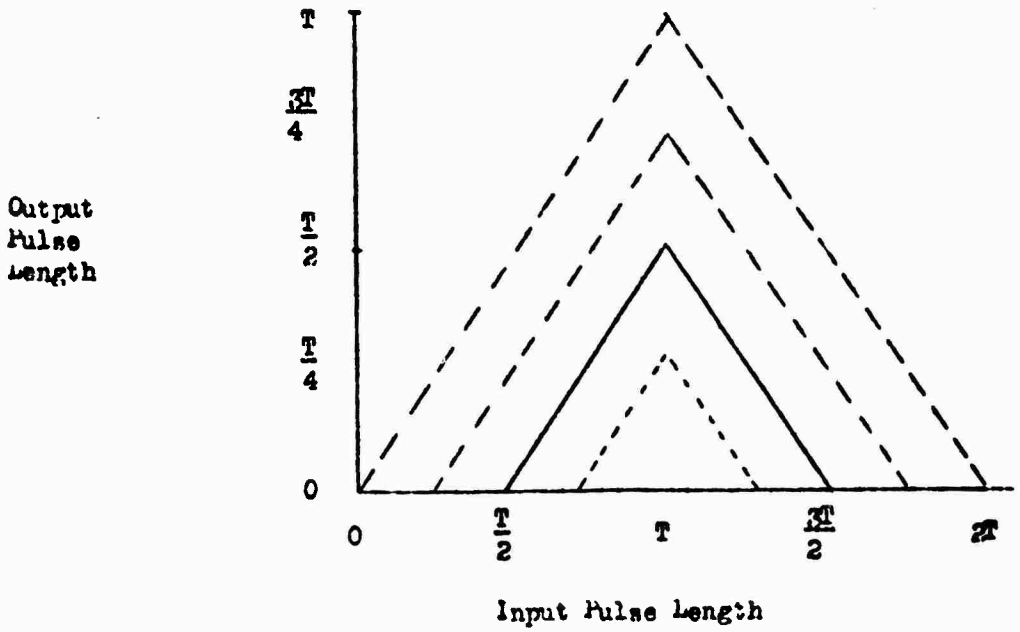

(a) One-stage pulse-length selector

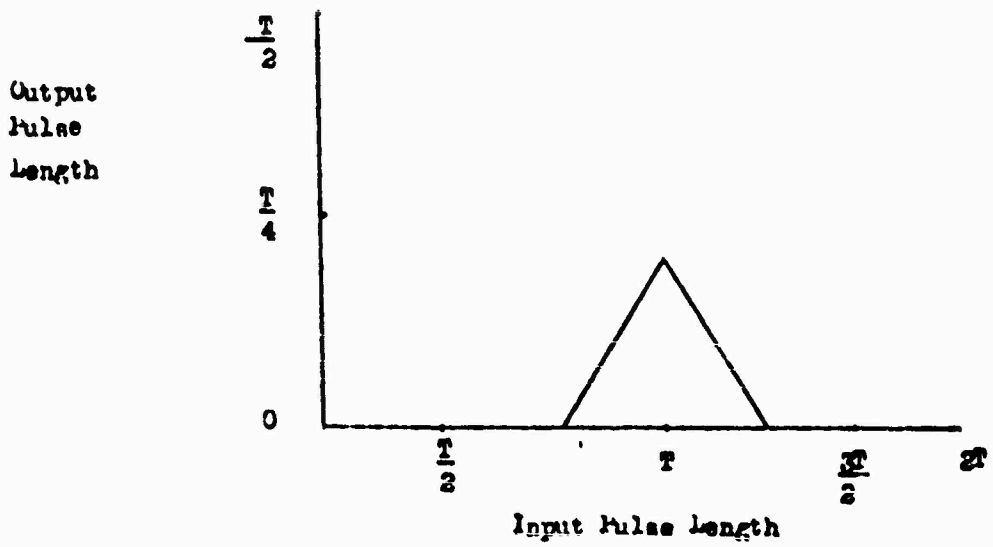

(b) Two-stage pulse-length selector

FIG. 2. Theoretical pulse-pass characteristics

Desired pulse length	T sec
Differentiation time	$d = \frac{T}{2}$ sec
Delay times	$d_1 = T$ sec
	$d_2 = \frac{T}{4}$ sec

FIG. 3. Pulse length selector.

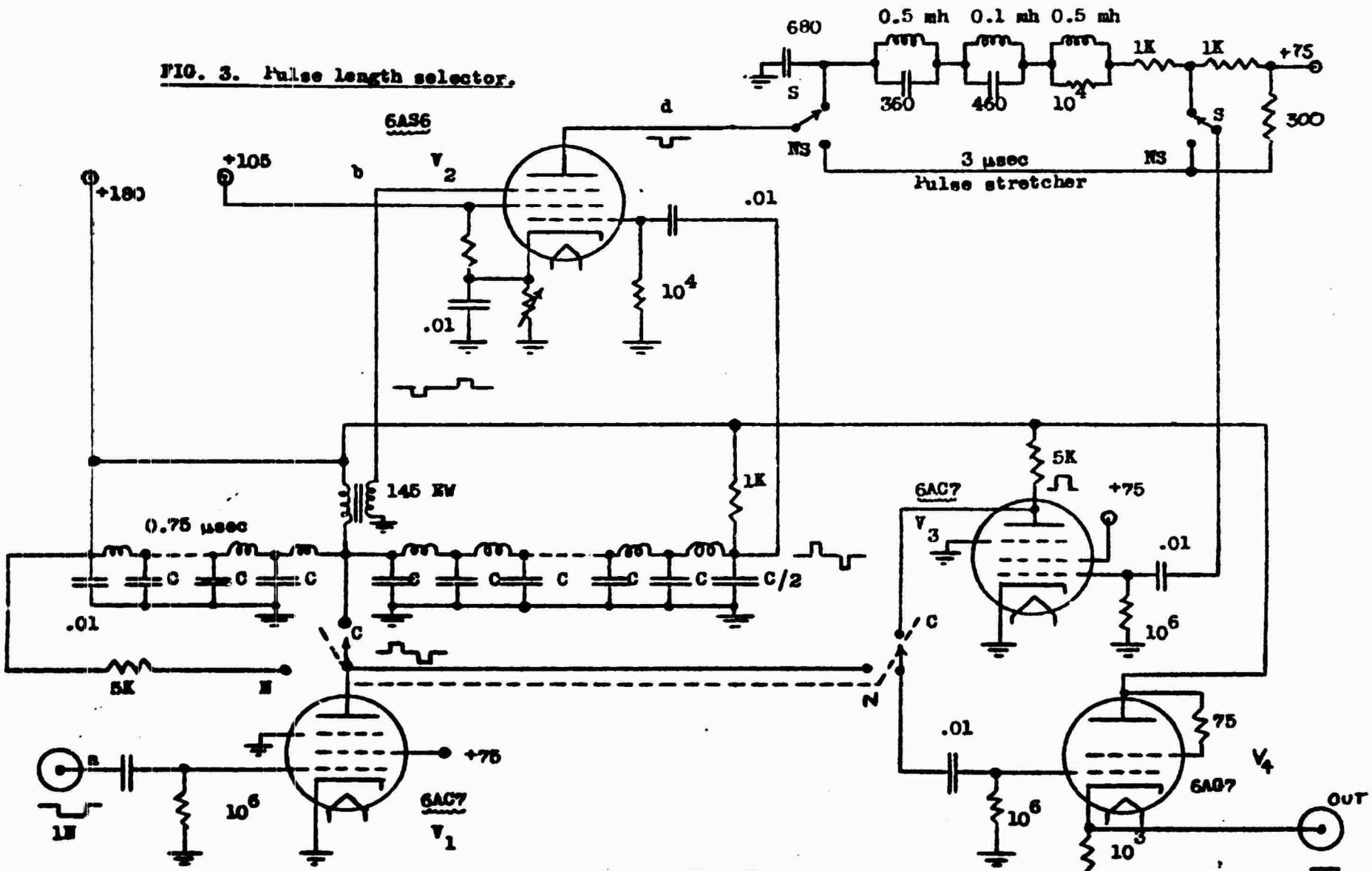

Notes
$L = 10^{-4}$ Henries
$C = 10^{-10}$ farads

V_1 = input amplifier
V_2 = coincidence tube
V_3 = output amplifier
V_4 = cathode follower

NS = No stretch video = 1.5 μsec.
N = normal video
C = pulse length selector video
S = video stretched to 3 μsec

stages is given in Fig. 2b. The output of the second stage is zero for all input pulses except those between $\frac{3T}{4}$ and $\frac{5T}{4}$ sec length at the input of the first stage. The output pulse length has a maximum value of $\frac{T}{4}$ sec for an input pulse of T sec and falls linearly to zero at the above limits, $\frac{3T}{4}$ and $\frac{5T}{4}$ sec.

Since $\frac{T}{2}$ sec is the longest signal at the input of the second stage, a simplification of the circuit for the second stage is possible. No differentiation is required. The output of the first stage is inverted, so it is positive and applied to one control grid of the second coincidence tube. This same voltage is delayed by $\frac{T}{4}$ sec. and applied to the second control grid of the second coincidence tube. The voltages appearing at the control grid of the second coincidence tube, and the resulting coincidence region are shown in Figs. le, f, and g.

If still narrower pass characteristics are desired, this process may be repeated as many times as required. The third stage would be arranged to select pulses of length $\frac{T}{4}$ sec and the overall pass characteristics would include pulses from $\frac{7T}{8}$ to $\frac{9T}{8}$ sec with a maximum pulse length at the output of $\frac{T}{8}$ sec.

The ever shorter and shorter output pulses from the selector, as additional selector stages are added, may cause some presentation loss* on the final indicator. A simple means of stretching the output pulses back to any desired length is given in Fig. 3. The charge passed by the output coincidence tube is discharged through a pulse forming line of suitable pulse time and impedance characteristics, the output then has the desired output pulse length. The pulse forming line must be of a type that stores the energy in one place, not distributed. It should be pointed out that this pulse stretcher is not universally applicable and may have deleterious effects if used in some other types of equipment.

C. <u>Multiple Pulse Decoder</u>.

The output of the one stage pulse length discriminator as described in Sec. A, results from the coincidence of the first half of the pulse delayed by T sec. with the second half of the pulse delayed by $\frac{T}{2}$ sec. This may be considered a two pulse decoder with two pulses of length $T' = \frac{T}{2}$ sec. separated

* RL Report No. 915 shows that if the pulse length on the final indicator is less than 1 mm the signal threshold power relative to receiver noise is greater the shorter the pulse.

by zero time. If the delay lines are changed in a way that maintains the coincidence conditions, the separation of these two pulses of length T' sec can, in principle, be any desired value, x. In practice the separation of pulses should not be between 0 and T' sec because of bandwidth or transient response considerations which will be discussed in the next section.

More precisely the one stage pulse length discriminator output depends at every instant on the input voltage at four points of time as stated in the equation (1) $V = (V_1 - V_2)(V_3 - V_4)$ These points are numbered for one instant of time on the sketches of Fig. 4. The noise voltages were considered negligible compared with the signal voltages in the above statement. It is seen that the voltages actually used in the coincidence circuit are the difference voltages between the pulse voltage and noise voltage at some point in time near the pulse. In the single stage selector the time regions immediately preceding and immediately following the pulse are used for this comparison as indicated by the numbers 1 and 4 in Fig. 4a. If the two halves of the pulse are separated into a two pulse code the region between the pulses is also a possible region for comparison with the pulse regions. As indicated by numbers 2 and 3 in that region in Fig. 4c, d, and e, the various combinations possible, together with the corresponding differentiation time, d, and first stage delay time, d_1, are given in Fig. 4.

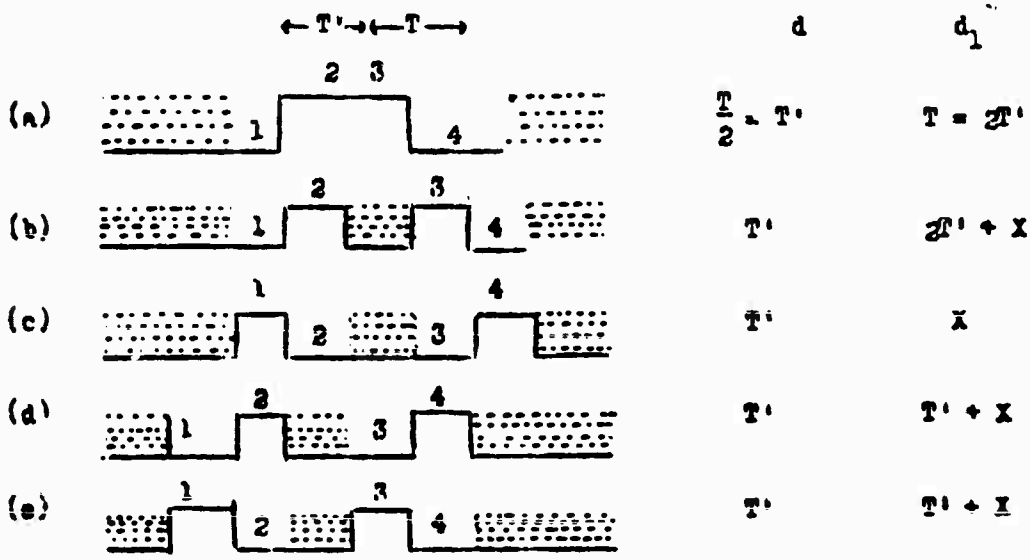

FIG. 4 One-stage selector or decoder. Voltage comparison points; differentiation time, d, and delay time, d_1, pulse separation, x, sec.

That these values of delay lines will work as given can be confirmed by drawing coincidence diagrams similar to Fig. 1, with proper regard to the sign of the various voltage components. It should be noticed that other wave forms than the desired two pulse code tend to be passed in each of the cases given above, but all of these other forms are discriminated against as to efficient use of energy. Any proposed decoder should be considered critically with regard to its tendency toward passing other wave forms.

Corresponding to the two-stage pulse-length selector in a similar way, is a two-stage decoder, which compares four voltages during pulses with four voltages in the adjacent time regions, taking the difference between pairs, one pulse point and one no-pulse point. In principle, at least, these points of comparison may be distributed as desired, but some arrangements are more convenient and desirable than others. Other factors also influence the particular comparison pattern used in a given case. With regard to receiver noise no difference would be expected between any of these arrangements. Some of the possible combinations with the corresponding delay times are given in Fig. 5.

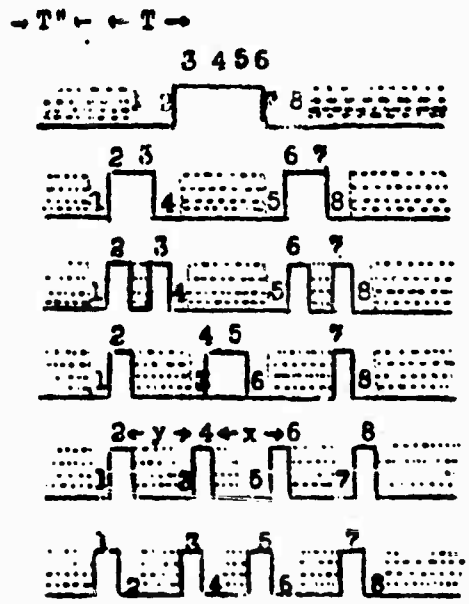

	d	d_1	d_2
(a)	$\frac{T}{2} - 2T''$	$4T''$	T''
(b)	T''	$2T''$	$2T'' + x$
(c)	T''	$2T'' + y$	$2T'' + x + y$
(d)	T''	$2T'' + y$	$T'' + y$
(e)	T''	$T'' + y$	$2T'' + x + y$
(f)	T''	$T'' + y$	$2T'' + x + y$

FIG. 5. Two-stage selector of decoder; comparison points; delay times d, d_1, and d_2. Separation of pulse groups x and y

The extension of these same concepts to any desired number of stages follows the same pattern as the extension from one to two stages, that is from two-pulse code to four-pulse code. It is also possible to give certain pulses more weight in the code than others. For example, the form of Fig. 5d may be modified so that a single pulse of length T" sec in the center of the code has the weight of both points 4 and 5 in that code. The corresponding delay times are: $d = T''$, $d_1 = 2T'' + y$, $d_2 = T'' + y$. In selecting the type of comparison pattern to be used in a given application, code types b and c of Fig. 5 should be favored because of greater freedom from simpler wave forms which also tend to be passed by the decoder.

D. Bandwidth Considerations.

The fundamental limitation on the selectivity that can be achieved by the addition of more pulse-length selector stages in the practical case comes from bandwidth limitations. The bandwidth alone has some pulse length selection properties. The narrower the bandwidth the longer the pulse that is favored. The minimum signal power discernible in the presence of certain kinds of interference is improved by having the receiver bandwidth slightly wider than optimum. At the same time the operation relative to receiver noise is not appreciably worse for i-f bandwidths equal to about twice the reciprocal of the pulse length. Also in this case tuning is not quite as critical. The recommended i-f bandwidth for pulse length T sec is therefore:*

$$B = 2/T$$

In the section on multiple pulse decoding it was pointed out that the single-stage pulse-length selector was equivalent to a two-pulse decoder in which the first and second halves of the pulse acted as the pulses of a two-pulse code separated by zero time. The bandwidth should be the same as if there were a separation of these two pulses into a real two-pulse code. Likewise, the multiple-stage pulse-length selectors should be considered the same in regard to bandwidth as the corresponding decoder. The n-stage pulse-length selector corresponds to a 2^n-pulse decoder. The i-f bandwidth for the n-stage pulse-length selector should correspond to a pulse $1/2^n$ as long as the selected pulse length. Therefore, in general the i-f bandwidth, B_n, for an n-stage selector or decoder should be:

$$B_n = \frac{2^{(n+1)}}{T}$$

* See R.L. Report No. 915.

The video bandwidth should be wide enough that the video circuits produce no distortion of the pulses passed by the i-f amplifier. This means that pulse delay lines and amplifier or selector circuits should be at least at broadband as the i-f amplifier, preferably broader. The reason for this requirement is more easily seen in the case of the multiple pulse decoder than in the selector. Equation (1) and the succeeding discussion show that the output at a given instant of the one stage selector depends on the voltage information from four points of time, two during the pulse and two in the neighboring noise. The number of points used simultaneously goes up by a factor of two for each additional selector stage added. If these points lose their independent character, as by video narrowing, then corresponding stages of the selector lose their function as the differences upon which they depend for their selection no longer exist. This is evident on an A-scope by the similarity of pulses of different (original) length after video narrowing.

III. PRACTICAL ONE-STAGE PULSE-LENGTH SELECTOR

To reduce the interference in the APX-13 receiver a one-stage pulse-length selector was built. The circuit diagram with constants is given in Fig. 3. The operation is essentially as described in Section II A.

The problem was to pass pulses three microseconds long and to reject, as far as possible, all other pulses regardless of their signal amplitude. The rise and fall time of the received r-f pulses was approximately 0.5 μsec. The bandwidth of the video circuits and delay lines in accordance with Section D, was made wide enough to pass the 0.5 μsec rise and fall with inappreciable distortion. The delay time, d_1, was 3 μsec. The differentiation time, d, was 1.5 μsec using a shorted line of one-way delay of 0.75 μsec.

A. The Performance of the One-stage Selector.

The pulse pass characteristic of the one-stage APX-13 selector is given in Fig. 6. In most applications it is desirable to see the weak signals. In this case it is necessary that the noise be showing on the presentation. This requires a reasonably careful setting of both grid bias voltages. It is recommended for the sake of maximum gain to small signals that the bias be set at the "knee" of the gm curves of Fig. 7. It should be recognized, however, that this is a compromise. Figure 6 shows that off-length pulses are reduced in amplitude by a factor of 5 compared to three μsec pulses (of the same saturation amplitude). If greater discrimination against pulses of the wrong

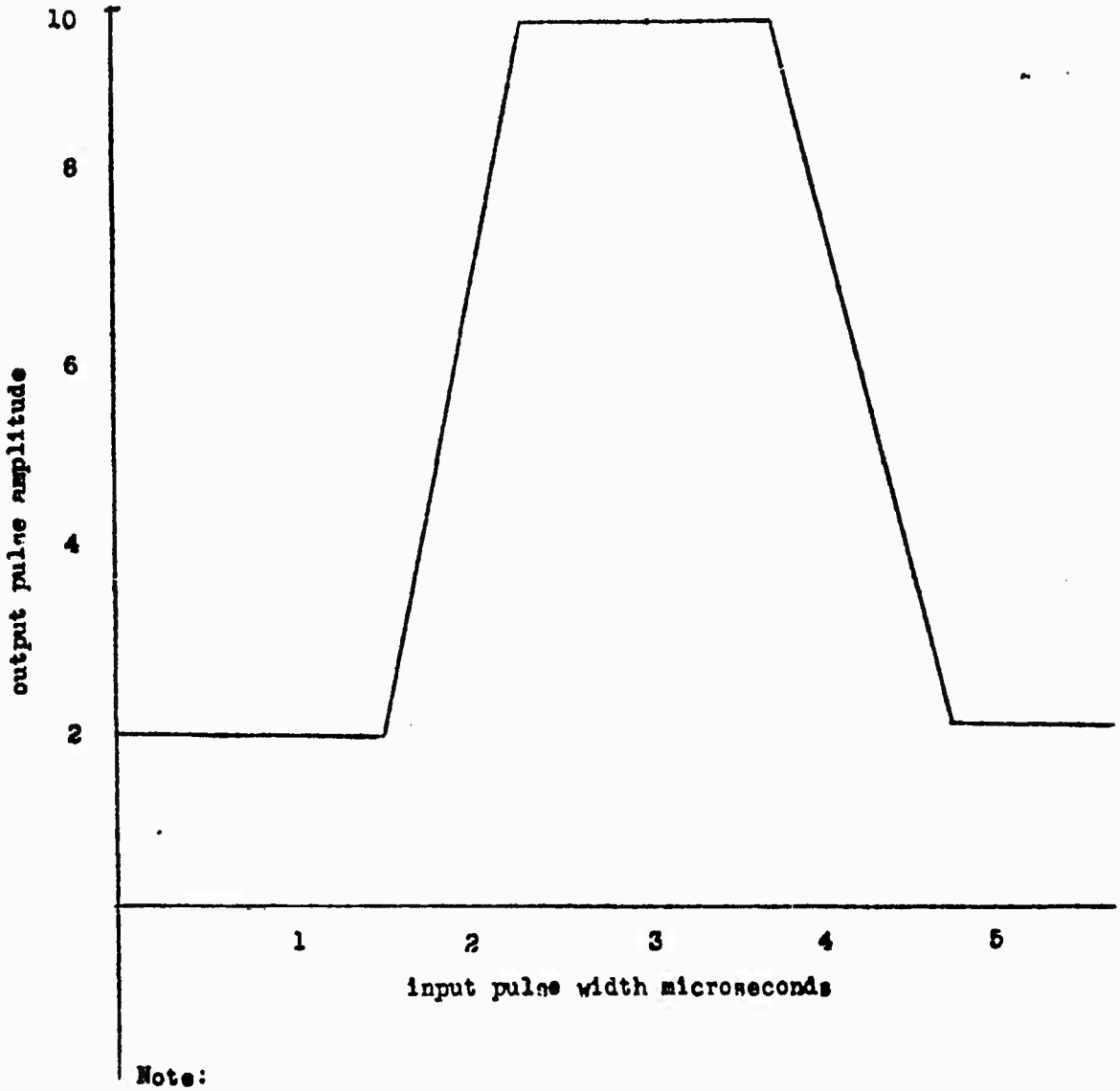

Note:

The slope of the selector curve is due to the slope of the rise and fall of the input pulse (about 1 μsec). The pulse lines themselves would give only 0.5 μsec slope. Bias 4 volts.

FIG. 6. Pulse length selector performance.

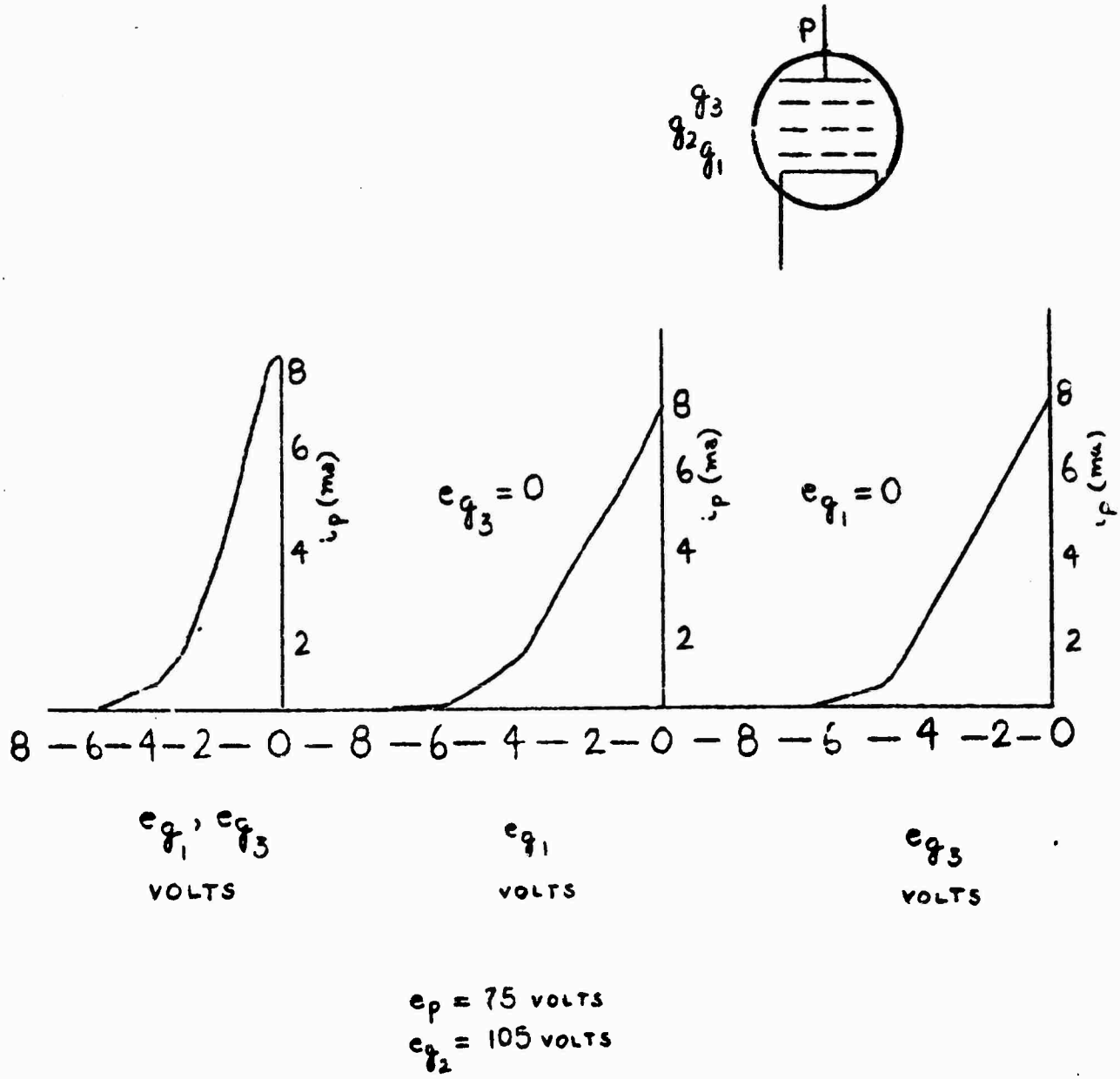

FIG. 7. Characteristics of the 6AS6

(a) delay

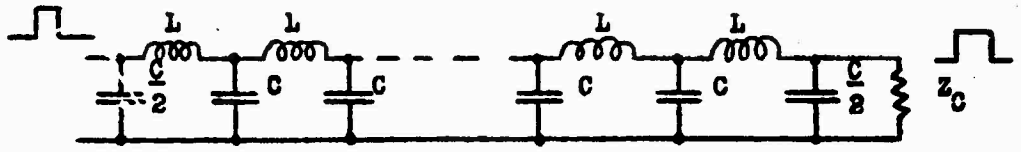

(b) differentiating

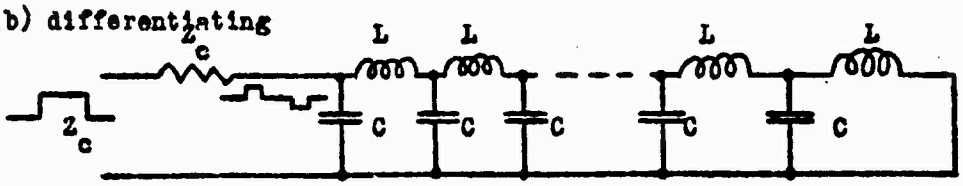

L = Henries
C = farads
t = seconds
n = number of sections

$Z_C = \sqrt{L/C}$
$t_{rise} = n\sqrt{LC}$
$t_{delay} = N\sqrt{LC}$

FIG. 8a. Pulse delay and differentiation lines.

(current fed)

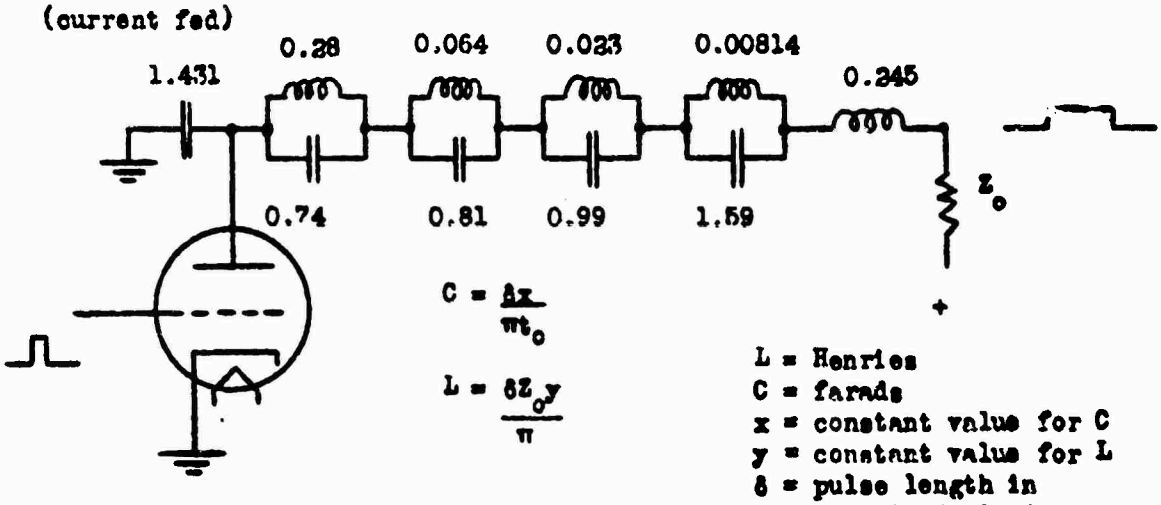

$C = \frac{\delta x}{\pi t_o}$

$L = \frac{\delta Z_o y}{\pi}$

L = Henries
C = farads
x = constant value for C
y = constant value for L
δ = pulse length in seconds desired

FIG. 8b. Pulse forming or stretching line.

length is desired the grids should be biased nearer the cutoff The theoretical discussion was on the basis of the output being proportional to the voltage on each of the control grids of the coincidence tube when that voltage was above a certain value and zero if either grid was below that value. Thus no compromise was involved in the theoretical discussion. The compromise comes from the lack of sharp cut-off in the coincidence tube characteristics.

In order to judge the performance of the selector and stretcher circuits photographs were taken of PPI and A-scope presentation of the signals from a "G" band receiver not using these circuits and then using them. The circuit given in Fig. 3 includes switches for changing from (1) normal presentation, (2) to selector output, or (3) stretched selector output for convenient comparison.

In Fig. 9a are photographs of normal presentation; 9b, the stretched selector output, and 9c, the selector output. The three rings appearing on the PPI photographs are the three pips appearing close together at the beginning of the "A" sweep. These signals are of 3 μsec made by a range-coded beacon and appear at constant range. The jamming from radar sets causes the spiral patterns on the normal PPI and the heavy saturated signals on the A scope. This jamming was due to a variety of pulse transmitters, sparking commutators, and other sources which were not known. In general the pulse length of this jamming was greater than 3 μsec. A slight amount was at 3 μsec and a slight amount less than 3 μsec. It will be noticed that the jamming is greatly reduced by the use of the selector, also that the ground signals close into the center of the PPI are less bothersome. At the same time the beacon signals (the three rings) stand out much better in both the selector output and the stretched selector output.

B. <u>Difficulties Encountered with the Pulse-length Selector</u>.

The length of the limited portion of high amplitude pulses passed by the receiver circuits before the selector is a function of the signal amplitude before limiting. This means that intense signals are "spread" to longer pulses at the input of the selector and consequently may be completely rejected if the signals are sufficiently intense. It is recommended that methods to combat this pulse spreading be employed in the receiver if signals of widely differing amplitude are to be passed at one setting of the receiver gain.

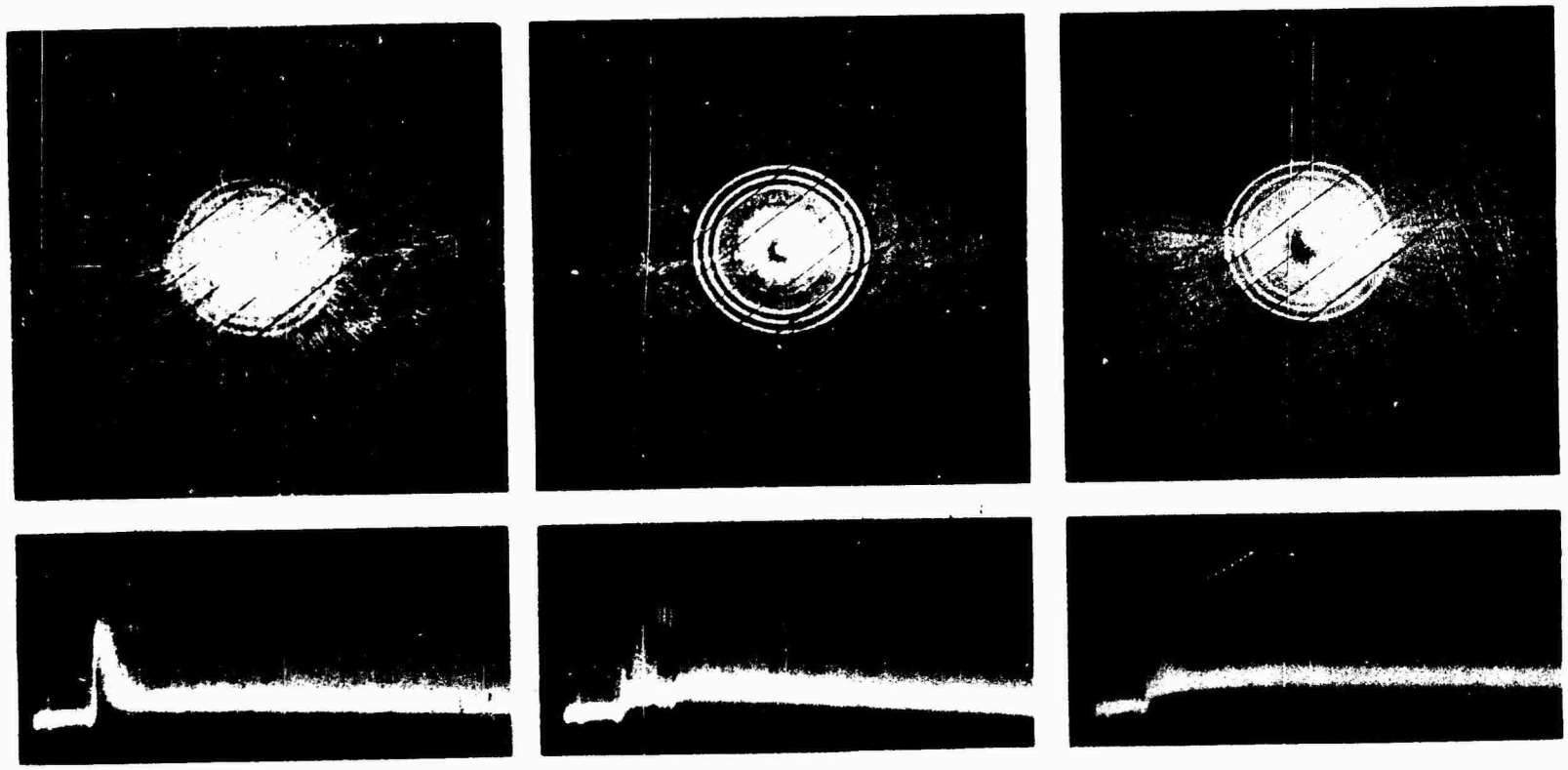

A- NORMAL PRESENTATION WITH INTERFERENCE

B- STRETCHED PULSE-LENGTH SELECTOR OUTPUT INTERFERENCE REDUCED

C- PULSE-LENGTH SELECTOR OUTPUT INTERFERENCE REDUCED

FIG. 9- PPI AND A-SCOPE PHOTOGRAPHS SHOWING THE INTERFERENCE REDUCTION ACCOMPLISHED BY THE PULSE-LENGTH SELECTOR

THE THREE RINGS ON THE PPI AND THE THREE SIGNALS ON THE A-SCOPE ARE FROM A CONSTANT RANGE BEACON WITH PULSE LENGTH 3 MICROSECONDS. THE SIGNALS IN THE NO-NOISE REGION ON THE LEFT IN THE A-SCOPE ARE SWEEP SYNCHRONIZATION SIGNALS.

C. Notes on the Coincidence Tube and the Delay Lines Used.

1. Coincidence Tube. The requirements of the coincidence tube are that there must be two grids in the tube which are capable of controlling plate current. It is necessary for the proper operation of the coincidence circuit that each grid have equal control on the plate current over the entire grid voltage or mathematically that $(gm_{g1})\ V_{g_1} = (gm_{g3})\ V_{g_3}$. In the circuit of Fig. 3 $V_{g_1} = V_{g_3}$. The Western Electric type 6AS6 vacuum tube was selected for this function. The 6AS6 and 6K5 have similar characteristics and the size with the exception that the 6AS6 has a tight suppressor grid (g_3) which is brought out to a pin. This grid has a transconductance curve which closely matches that of (g_1) when $V_p = 75$ volts and $V_{g2} = 105$ volts, and therefore makes an excellent coincident tube for video frequencies. See Fig. 7 for transconductance curves of g_1 and g_3 of the 6AS6.

2. Delay Lines. Although it is possible to use transmission lines (delay lines) which are of the distributed machine-wound variety, providing their specifications meet those required, it was easier to build so-called lumped lines from standard inductors and capacitors. The design formula and network pattern for the delay line and differentiating delay line are shown in Fig. 8a. In case of the differentiating line, the loss down the line and back must be kept small so that the amplitude of a reflected step wave cancels, as nearly as possible, the latter part of the incoming step wave. In case of the delay line, the loss down the line is not too important, as the non-delayed differentiated wave may be reduced in amplitude to match the delayed differentiated wave at the coincidence tube.

In order to stretch the coincidence pulse to its original length, a pulse forming line (of a design worked out by Guillemin for modulators) was used. This line has the property of storing energy during the coincidence pulse, then releasing this energy over the required length of time. Design formula and circuit are shown in Fig. 8b.

In both types of lines it may be necessary to place damping resistors of value of Zc to 2Zc in parallel with the first and last inductance sections of the line in order to damp out the transients set up by the square waves.

A compromise must usually be reached between the number of sections used and the time of rise and delay expected from the line.

R. M. Ashby
L. K. Maher
December 1, 1945