PHOTOGRAPH THIS SHEET

AD A951118

DTIC ACCESSION NUMBER

LEVEL

INVENTORY

Rept. No. MET345-568T4

DOCUMENT IDENTIFICATION

Contract DAI-30-115-505-ORD-(P)-613 Aug. 56 WAL-313/48, ITR-4

DISTRIBUTION STATEMENT A

Approved for public release;
Distribution Unlimited

DISTRIBUTION STATEMENT

ACCESSION FOR		
NTIS	GRA&I	☒
DTIC	TAB	☐
UNANNOUNCED		☐
JUSTIFICATION		
(Aug. 1956)		
BY		
DISTRIBUTION /		
AVAILABILITY CODES		
DIST	AVAIL AND/OR SPECIAL	
A		

DISTRIBUTION STAMP

Released

DTIC
ELECTE
SEP 14 1981
S D
D

DATE ACCESSIONED

UNANNOUNCED

81 7 02 013

DATE RECEIVED IN DTIC

PHOTOGRAPH THIS SHEET AND RETURN TO DTIC-DDA-2

DTIC FORM OCT 79 70A

DOCUMENT PROCESSING SHEET

WAL 313/48
Interim Technical Report No. 4
August 1956

WATERTOWN ARSENAL
WATERTOWN, MASS.
LABORATORY

Wal 313/48-4

EFFECT OF HYDROGEN ON HIGH-STRENGTH STEELS

AD 116625

AD A951118

Prepared by
V. WEISS

WATERTOWN ARSENAL
Contract No. DAI-30-115-505-ORD-(P)-613
Department of the Army Project No. 5B93-26-006
Ordnance Project No. TB4-911

SYRACUSE UNIVERSITY RESEARCH INSTITUTE
CHEMICAL AND METALLURGICAL ENGINEERING
Report No. MET345-568T4

DISTRIBUTION STATEMENT A
Approved for public release;
Distribution Unlimited

NOTE:-This form is to be executed to show proposed distribution, and forwarded in triplicate to the Chief of Ordnance for prior approval of all distributions. Proposed distribution to agencies or individuals whose official interest in the report is not obvious must be justified by explanatory statements on the back of this form.

BINDING AREA FORM NO. ORDBE-342 L. (Rev.) 2 Sept. 1947 *BINDING AREA*

COPIES PREPARED 2

WATERTOWN ARSENAL

TECHNICAL REPORT DISTRIBUTION

EXTRA COPIES REMAINING

REPORT NO. WAL 313/48-4 TITLE: Syracuse Univ. Res. Inst. Cont. DAI...613 Int. Tech. Rpt. 4 August 19,6

TO:	NO. OF COPIES	DATE OCO APPROVAL	DATE SENT	TO:	NO. OF COPIES	DATE OCO APPROVAL	DATE SENT
WATERTOWN ARSENAL-ORDBE				OTHER:			
Laboratory File	1						
Author:							
OFFICE, CHIEF OF ORDNANCE							
ORDIR-Artillery							
ORDIM-Ammunition							
ORDIT-Automotive							
ORDIS-Small Arms							
ORDTB-Res . & Materials							
ORDTM-Ammunition Dev.							
ORDTR-Artillery Dev.							
ORDTS-Small Arms Dev.							
ORDTT-Tank Automotive							
ORDTU-Rocket Dev.							
ORDTX-Executive							
ORDTX-AR - Executive Library	1						
ORDNANCE DEPARTMENT AGENCIES							
ORDBA-Frankford Arsenal							
ORDBB-Picatinny Arsenal							
ORDBC-Rock Island Arsenal							
ORDBD-Springfield Armory							
ORDBF-Watervliet Arsenal							
ORDBG-Aberdeen Prov. Ground							
ORDJR-Raritan Arsenal							
ORDMX-Detroit Arsenal							
Cancelled report to AFSC							
4th retention 1/2/58							

APPROVING AUTHORITY:

Ltr.:

Date:

From:

Wal 313/48-4

WAL 313/48
Interim Technical Report No. 4

EFFECT OF HYDROGEN ON HIGH-STRENGTH STEELS

George Sachs, Director
Metallurgical Research Laboratories
Syracuse University Research Institute
Collendale Campus, D-6
Syracuse 10, New York

August 1956

Work Performed Under
Technical Supervision of
Watertown Arsenal Laboratory

Rochester Ordnance District
Contract No. DAI-30-115-505-ORD-(P)-613
Department of the Army Project No. 5B93-26-006
Ordnance Project No. TB 4-911
Account No. 1620.345

Report Prepared by:

V. Weiss

for

WATERTOWN ARSENAL
Watertown 72, Massachusetts

MET345-568T4

DISTRIBUTION STATEMENT A
Approved for public release;
Distribution Unlimited

PREFACE

This work was performed under Contract No. DAI-30-115-505-ORD-(P)-613, "The Effect of Stress States and Concentrations on Plastic Flow and Fracture," with Dr. R. Beeuwkes, Chief Scientist, acting as coordinator. This lecture was originally published in the Proceedings of the 1955 Sagamore Research Conference, "Strength Limitations of Metals," sponsored by the Ordnance Corps, United States Army.

ABSTRACT

The effect of hydrogen on the mechanical properties of high-strength steels and titanium is discussed. It is shown that hydrogen embrittlement is indicated as a decrease in ductility of smooth specimens and in the notch strength. A decrease in strain rate leads to pronounced embrittlement, the maximum embrittlement or minimum of strength being obtained on sustained load tests. Regarding the effects of testing temperature the maximum ductility obtains at room temperature while testing at lower or higher temperatures decreases the effect of hydrogen embrittlement.

It is also shown that the effect of baking treatments in order to eliminate hydrogen embrittlement depend upon the plating or charging conditions. Increasing notch sharpness, which gives decreasing notch strength values for tests conducted at moderate strain rates, becomes less effective for tests conducted at very low strain rates and for sustained load tests where the development of the crack due to hydrogen itself produces the limiting stress concentration factor.

Effects of Hydrogen on High-Strength Alloys

The fact that hydrogen decreases the ductility of steel and leads to cracking at stresses below the tensile strength was observed many years ago in rail steel. Fish eye fractures, hair line cracks (or flakes) and, more recently, a decrease in strength under the action of sustained loads have been found to be caused by hydrogen. A typical example is shown in Figure 1 where a landing gear part failed after it was straightened and cadmium plated. In the past several years a great amount of research has been conducted to study the effects of hydrogen on new high-strength alloys. The results of these investigations clearly indicate a definite deterioration of strength properties of these alloys due to hydrogen contamination, especially those strength properties that are connected with low strain rates or residual stress systems. All failures of these kinds are now commonly referred to as delayed failure cases.

The materials for which these effects are at present of major interest are steels and high-strength titanium alloys. Since the effects of hydrogen in steel were found to depend upon the strength level of the steel, steels again can be separated into those having a strength level above 200,000 psi and those having a strength level below 200,000 psi.

The sources of hydrogen can be divided into two different groups. The first group, termed "cell action," involves the processes of pickling, cleaning and electroplating. Here the electro-chemical potential between metal surface and electrolyte is the driving force to build up a diffusion gradient

which is responsible for the introduction of hydrogen into the metal. The second source can be called "processing" since it refers to hydrogen dissolved during the melting, alloying, and heat-treating procedures for the material.

In sections where cell action is the major source of hydrogen, the hydrogen distribution has a maximum close to the surface of that section. Where the hydrogen is introduced during melting or heat treating it is more or less uniformly distributed throughout the metal.

Relatively little information is available about the effects of residual hydrogen originating during melting and alloying of steels. The brittleness resulting from hydrogen introduced during heat treating has been recognized only recently. Hydrogen embrittlement caused either by heating in a hydrogen-containing atmosphere or by cell action appears to be identical as is shown in Figure 2 where cathodically embrittled and hydrogen contaminated specimens are compared on the basis of their fatigue life.

Also very early (1934) in this type of research it was recognized that the bend test (or as used in this figure, the bend fatigue test) serves as an indicator of hydrogen embrittlement, while the standard tensile strength fails to indicate hydrogen embrittlement. However, the reduction of area of a tensile specimen is highly sensitive to hydrogen embrittlement, as are all ductility measurements. This is shown in Figure 3 where the effect of strength level is also illustrated.

Qualitatively, the same picture is obtained on titanium alloys. Figure 4 illustrates the decrease in ductility with increasing hydrogen content of an 8 percent Mn-Ti alloy. The limits at which hydrogen becomes detrimental

to the mechanical properties depend upon the alloy composition. In general, the lower threshold value is higher than for steel. In addition, it should be mentioned here that this effect in titanium is an effect of residual hydrogen.

In the above discussion the general effects of hydrogen in steels and titanium alloys originating from both cell action and processing in hydrogen containing environments are outlined. In order to fully describe the effect of hydrogen on high-strength alloys, a few more parameters (in addition to strength level and hydrogen content) must be introduced. The most important of these parameters are the testing speed or strain rate, the testing temperature, the hydrogen distribution and finally the stress system which leads to failure.

The effects of strain rate on hydrogen embrittlement were (among other research institutes) studied at Syracuse University on 4340 steel. The notch-tensile test, which was earlier proven to be highly ductility-sensitive, was used. Figure 5 shows the decrease in notch strength with decreasing strain rates.

Similar effects were observed on copper-plated, low-alloy steels having strength levels of below 200,000 psi and on titanium.

The effect of testing temperature is shown in Figure 6.

The combined effect of testing temperature and strain rate is best illustrated in a 3-dimensional representation. For a 1020 steel Figure 7 shows the ductility surface of hydrogen free (a) and severely charged (b) material. The effect on a high strength steel and on titanium is similar, varying slightly in hydrogen content and maximum obtainable ductility.

In the picture of the effects of hydrogen on strength of high-strength alloys which has been outlined so far, it was always the ductility-sensitive quantity in the test which suffered the loss. In principle, then, every test which allows the measurement of such a quantity can be used for the evaluation of hydrogen embrittlement. In the tension test it is the reduction of area; in the slow bend test it is the fracture angle; in the notch tensile test it is the notch strength. Similar losses in fatigue tests and sustained load tests are observed, the cycles or time to fracture being the indicating quantities. Since all of these tests have given basically identical trends and because of the great number of variables which have to be investigated (in addition to the already mentioned variables of hydrogen content, strain rate, testing temperature, and strength level, various recovery heating treatments ((heating time)) and the effects of various plating conditions), the test should be economical. With this need in mind, there has been developed at Syracuse University a bend testing machine which allows the testing of 20 specimens simultaneously at various temperatures and strain rates. The Naval Air Material Center in Philadelphia has developed a very economical ring test and the General Electric Laboratories have used a clip-spring type test.

The correlation of these test methods is very good. Dr. Beck, who is in charge of the investigation at the Navy yard has indicated that all our measurements on the bend test have been confirmed by the ring-test method.

It is now desirable to present our view of the stress-system-hydrogen combination that leads to cracking and failure. This is best illustrated in Figure 8 where the buttonhead fillet of a notch tensile specimen is shown.

This specimen was cathodically embrittled on the entire surface. After fracturing in the test section (K = 10) the indicated crack was found in the buttonhead (where K = 1.7). From this it was concluded that the initial stress concentration need not be very severe in order to attain maximum hydrogen embrittlement. The development of the crack itself produces a limiting stress concentration so that in the presence of failure only slight differences due to the initial stress concentrations can be expected.

Our ideas were confirmed by data shown in Figure 9. Cathodically embrittled notch tensile specimens having a 0.3 in. dia. cross section and notches with radii corresponding to K = 3, 5 and 10 were tested at room temperature at loading rates of 2, 0.2, 0.02 in. per sec and in stress rupture, corresponding to a loading rate of 0 in. per sec. With decreasing loading rates the effect of the initial stress concentration was virtually eliminated.

The combined effect of stress and hydrogen leads to a crack which finally leads to complete fracture. Very recently the relation of flake formation in steel to hydrogen, microstructure and stress was studied at Case Institute of Technology. It was found that no correlation existed between average hydrogen content and flake formation where cooling stresses were low. Hydrogen was found necessary but not sufficient for flake formation. The same kind of behavior is assumed to be true with any type interaction between residual stresses and hydrogen.

For the description of both strain rate effect and testing temperature effect more assumptions about the cause of weakening must be made than merely to refer to hydrogen as to a material deteriorating element. The loading

rate influence on the strength of materials has been described by Prof. D Wood, the effects of stress concentration were described by Prof. Hoffman and the crack propagation will be discussed by Dr. Irwin. The Griffith crack concept has been advanced and it would only be repetitious to discuss it further. The assumption of a cooperation of diffusion and chemical reaction between hydrogen and steel or titanium combined with the general fracture concept, therefore, will suffice to describe the above-mentioned effects.

The hydrogen is introduced into the metal by diffusion. In the case of residual hydrogen, the hydrogen vapor pressure of the surrounding atmosphere builds up the diffusion gradient while, in the case of cell action, the electrochemical potential is the driving force. Once the diffusion gradient is built up and a large amount of hydrogen is present at the surface, the hydrogen moves inward governed by the diffusion laws.

The strain rate effect is thus a competitive effect between inward diffusion and crack propagation. If the strain rate exceeds a certain value, no effect of hydrogen embrittlement is noticeable.

Different plating conditions give different levels of embrittlement, which is particularly noticeable in recovery of ductility during baking. This brings up the subject of recovery and inhibition treatment. The most commonly used recovery treatment is baking in the ranges from 200 to 700°F. Specimens which are cathodically embrittled, without having a layer plated on the surface, have recovered after a relatively short time. When specimens are plated, the metal layer represents a more or less impenetrable barrier to outward diffusion of hydrogen. This is shown in Figure 10 where the

increase in reduction of area is plotted as a function of baking time at 375°F for various plates. A cathodically charged specimen was found to have completely recovered after approximately 1 hour at room temperature.

Even with these possibilities of at least partially eliminating hydrogen embrittlement, it is more desirable to prevent initial impregnation. In the case of residual hydrogen, vacuum melting (for titanium) and heat treating in vacuum or inert atmospheres have been applied successfully. Where plating is necessary, shot peening before plating was found to decrease hydrogen penetration (Dr. Beck). Organic oxidizing agents as plating bath additions (such as used to inhibit hydrogen penetration during pickling) have not been found of any value during electroplating. However, strong oxidizing agents such as H_2O_2 have reduced hydrogen embrittlement considerably. H_2O_2 itself is impractical because of its tendency to decompose. Flash plating with electroless nickel to a thickness of 0.00004 in. prior to the desired 0.0005 in. cadmium plate has also been found to aid in suppressing embrittlement.

Much is still to be learned about the phenomena here described. A fundamental study of the micro-structural events caused by hydrogen would give a great deal of information and would lead to more effective inhibition or recovery treatments. The state of the material residual(surface) stresses and microstructure are also of concern to this study and finally a detailed understanding of the cracking and fracturing process will help considerably in solving the problem.

REFERENCES

Sachs, G. and Beck, W., Survey of Low-Alloy Aircraft Steels Heat Treated to High-Strength Levels, WADC TR 53-254, Part 1 (1953).

Frohmberg, R. P., Barnett, W. J. and Troiano, A. R., Delayed Failure and Hydrogen Embrittlement in Steel, WADC TR 54-320 (1954).

Slaughter, E. R., Fletcher, E. E., Elsea, A. R. and Manning, G. K., An Investigation of the Effects of Hydrogen on the Brittle Failure of High-Strength Steels, Battelle Memorial Institute, Quarterly Report No. 4 to WADC (1954).

Zapffe, C. A. and Haslem, M.E., Acid Composition, Concentration Temperature, and Pickling Time as Factors in the Hydrogen Embrittlement of Mild Steel and Stainless Steel Wire, Trans. Am. Soc. Metals, Vol. 39 (1947) p. 213.

Smith, D. P., Hydrogen in Metals, The University of Chicago Press, Chicago (1948).

Beck, W., Klier, E. P. and Sachs, G., Constant Strain Rate Bend Tests on Hydrogen Embrittled High-Strength Steels, (Publication in print, Am. Inst. Mining Met. Engrs., (1956).

Petch, N. H. and Stables, P., Delayed Fracture of Metals Under Static Load, Nature, Vol. 169 (1952) p. 842.

Hobson, J. B. and Hewitt, S., The Effect of Hydrogen on the Tensile Properties of Steel, J. Iron Steel Inst., Vol. 173 (1953) p. 131.

Klier, E. P., Muvdi, B. B. and Sachs, G., Hydrogen Embrittlement in an Ultra-High-Strength 4340 Steel, (Publication in print, Am. Inst. Mining Met. Engrs., 1956).

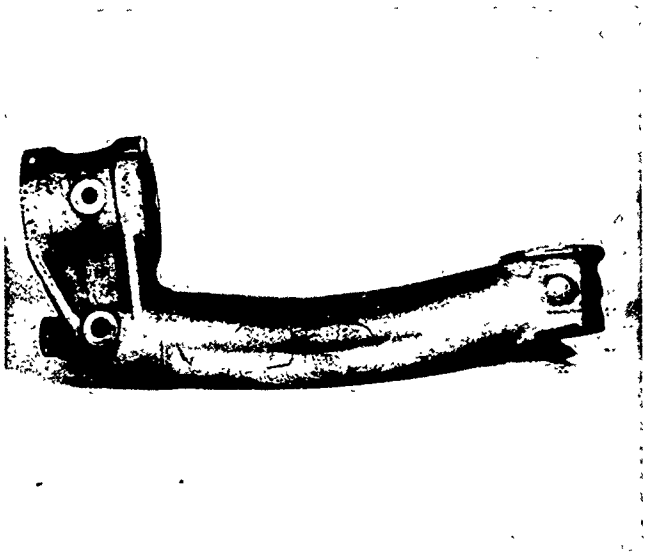

FIG. 1 PART CRACKED IN STRAIGHTENED SECTION ON CADMIUM PLATING.

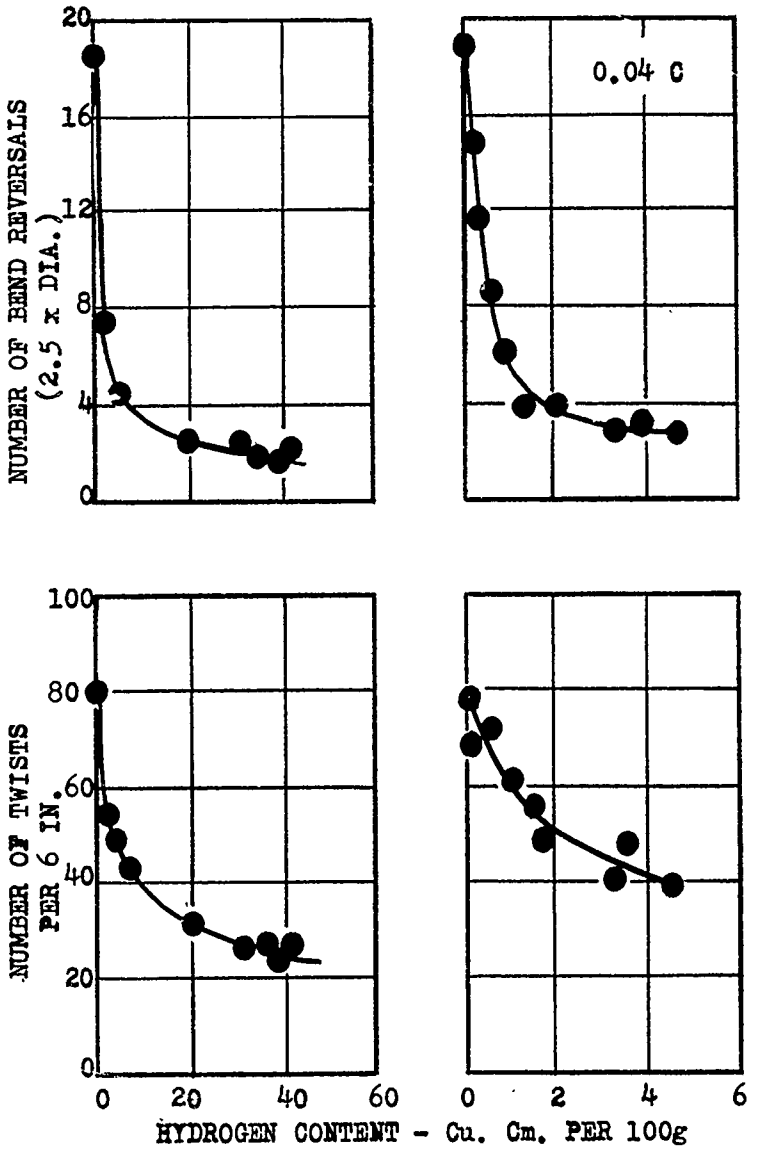

a.
CATHODIC
TREATMENT
(19 AMP PER SQ FT)

b.
HEATING IN
HYDROGEN

FIG. 2 COMPARISON OF HYDROGEN EMBRITTLEMENT OF LOW-CARBON STEEL WIRE (0.160 IN. DIA.) BY DIFFERENT TREATMENTS.

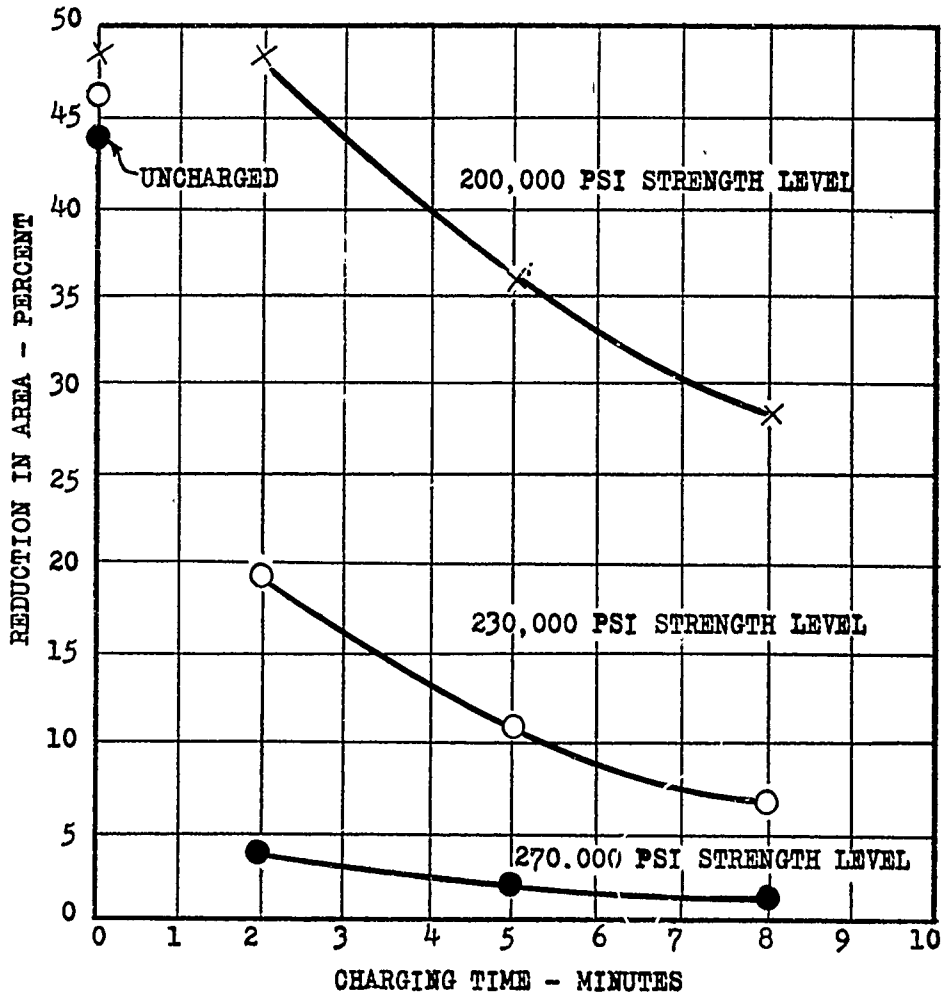

FIG. 3 EFFECT OF CHARGING TIME ON DUCTILITY OF 4340 STEEL HEAT TREATED TO VARIOUS STRENGTH LEVELS (4% H_2SO_4, 0.02 AMPS/SQ. IN. AGED 5 MINUTES AT ROOM TEMPERATURE BEFORE TENSILE TESTING).

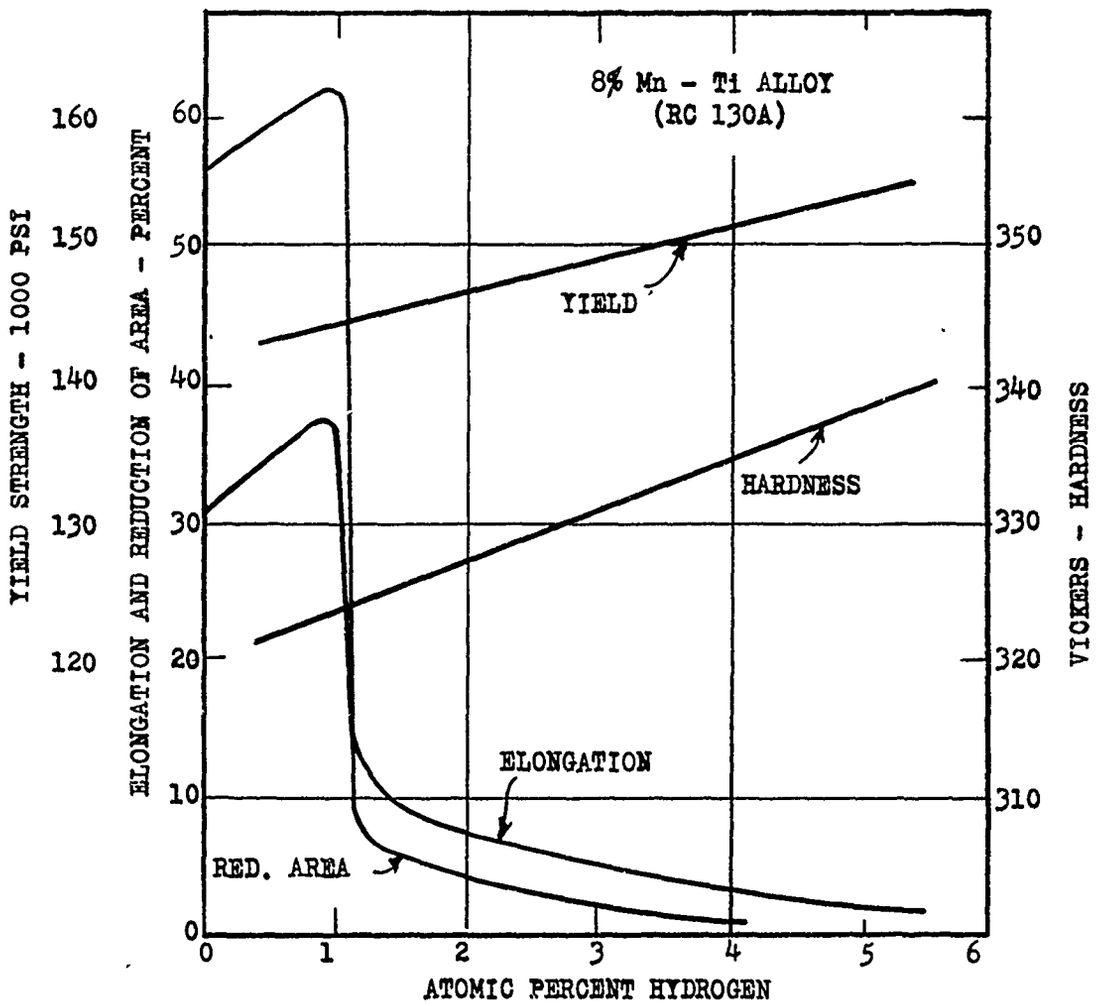

FIG. 4 EFFECT OF HYDROGEN ON THE MECHANICAL PROPERTIES OF COMMERCIAL RC 130A-ALLOY.

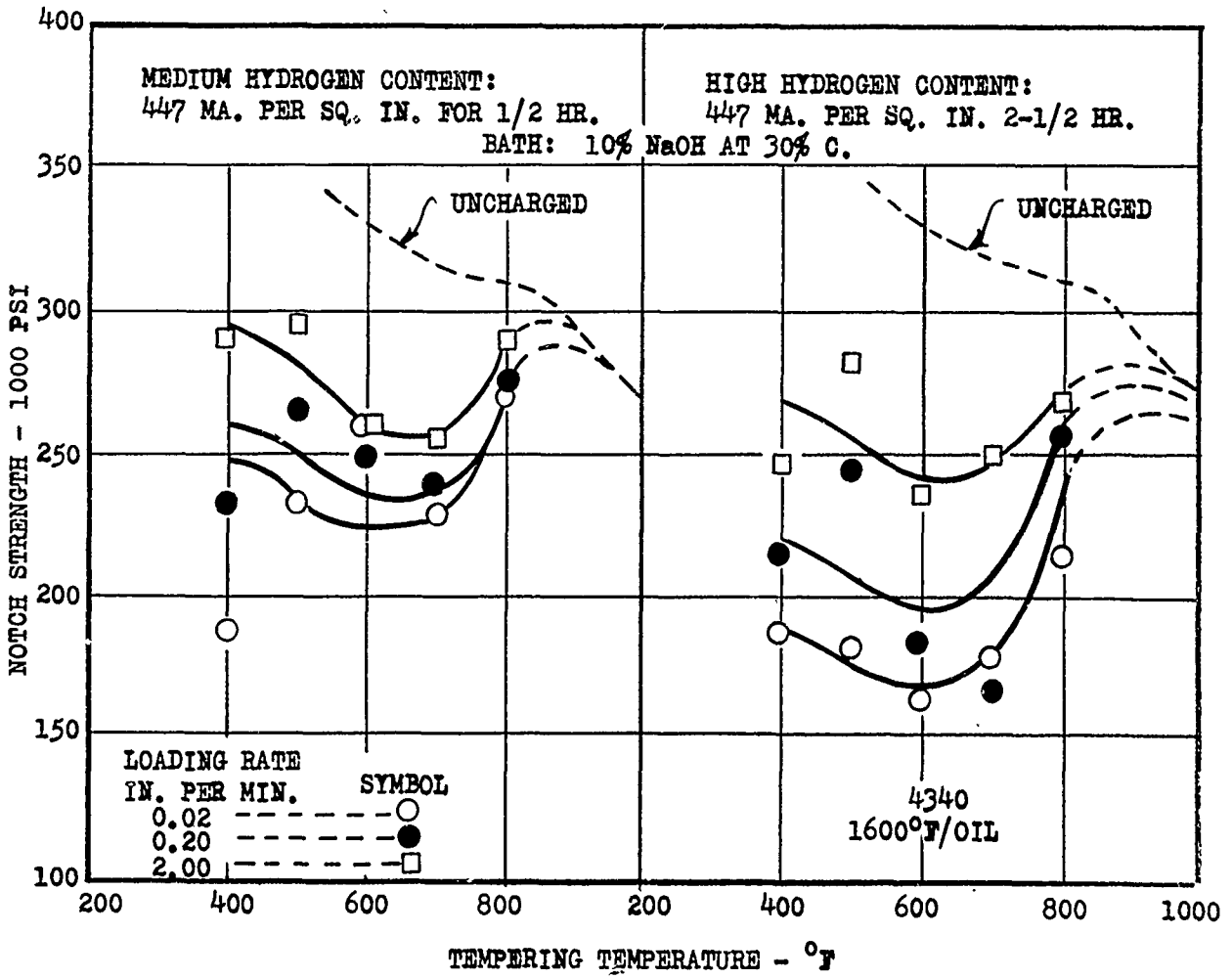

FIG. 5 NOTCH STRENGTH OF HYDROGEN EMBRITTLED 0.3 IN. DIA. NOTCHED TENSILE SPECIMENS (K = 3) OF 4340 STEEL AS A FUNCTION OF TEMPERING TEMPERATURE FOR TWO DIFFERENT HYDROGEN CONTENTS. TEST TEMP: R.T.

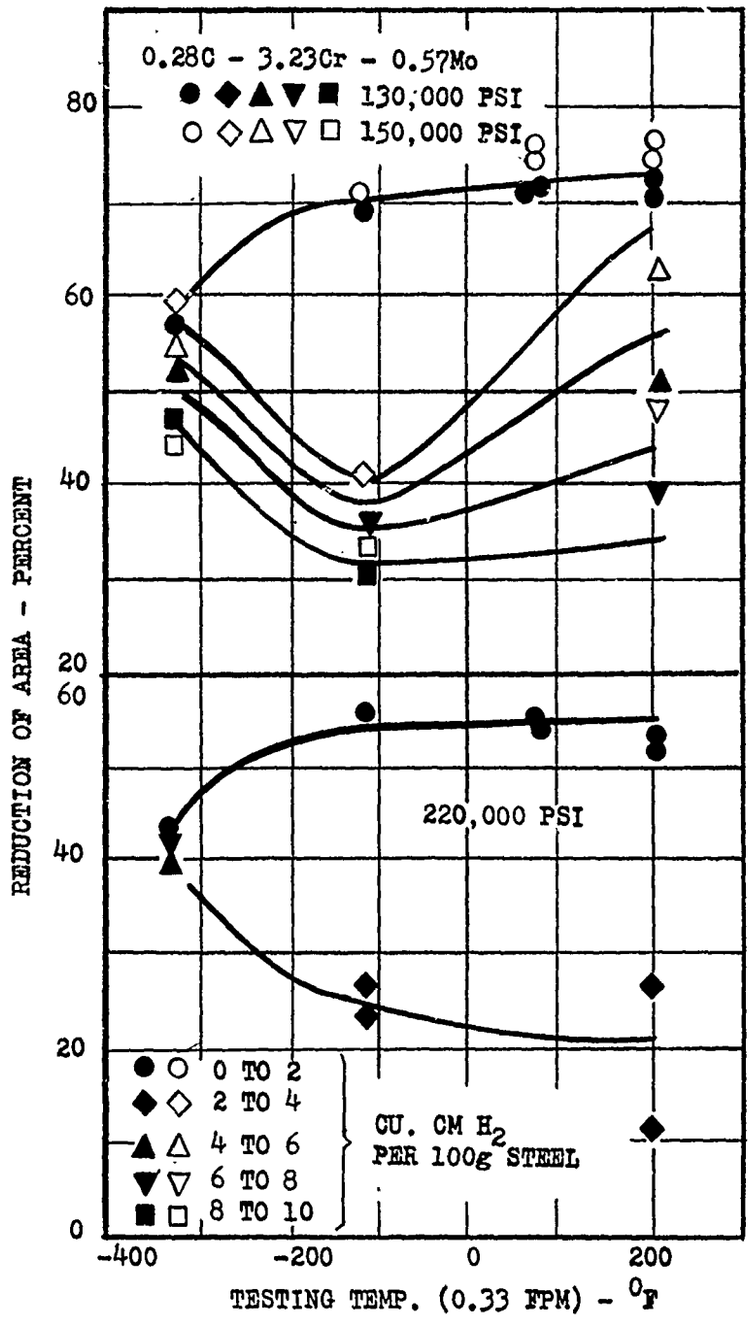

FIG. 6 EFFECT OF TESTING TEMPERATURE ON HYDROGEN EMBRITTLEMENT OF A HEAT-TREATED LOW-ALLOY STEEL OBTAINED BY HEATING IN HYDROGEN UNDER PRESSURE.

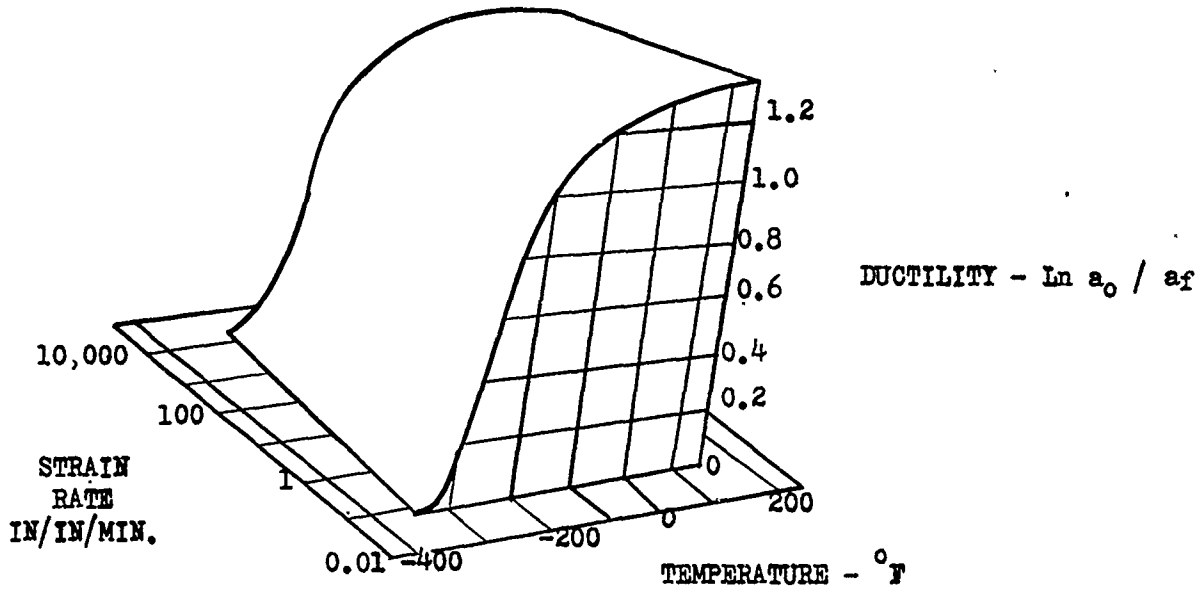

a)

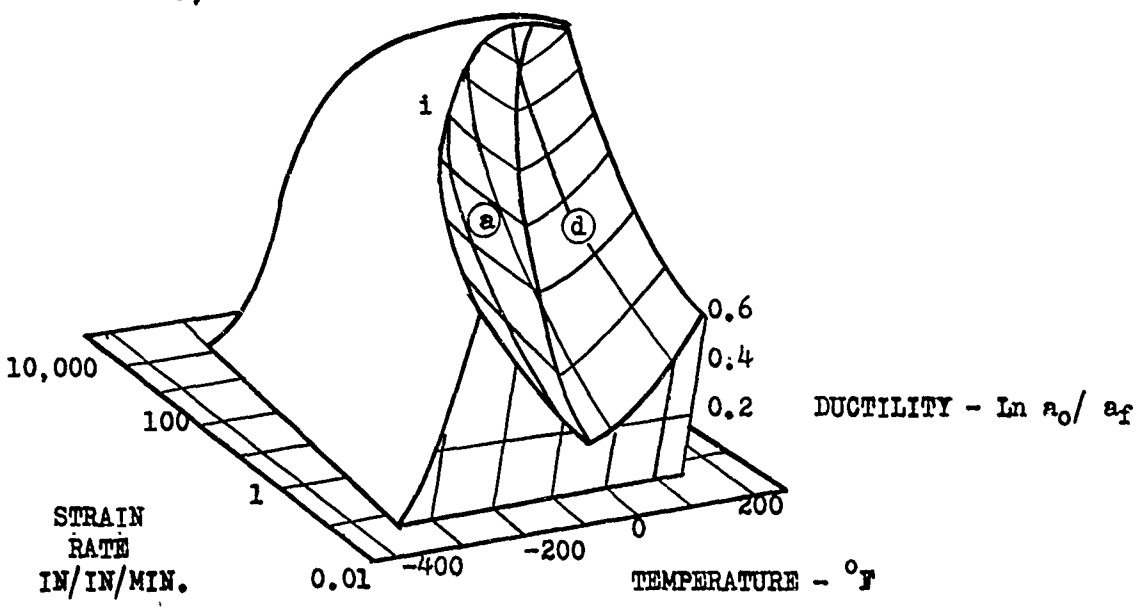

b)

FIG. 7 THE DUCTILITY OF AN SAE 1020 STEEL AS A FUNCTION OF STRAIN RATE AND TEMPERATURE: a) AS ANNEALED b) AS CHARGED CATHODICALLY FOR 1 HOUR IN 4 PERCENT SULPHURIC ACID. CURVE i. IN FIG. 1b, BOUNDS THE RANGE OF STRAIN RATES AND TEMPERATURES WHERE EMBRITTLEMENT IS FOUND.

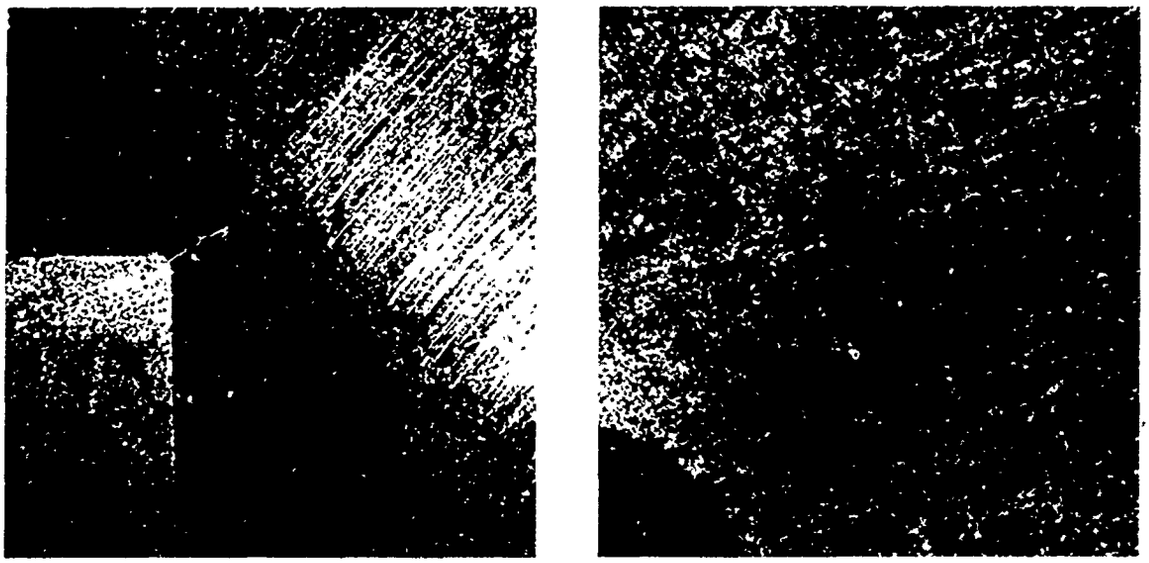

FIG. 8 PHOTOGRAPH OF NOTCH TENSILE SPECIMEN FILLET (MUVDI-PUBLICATION).

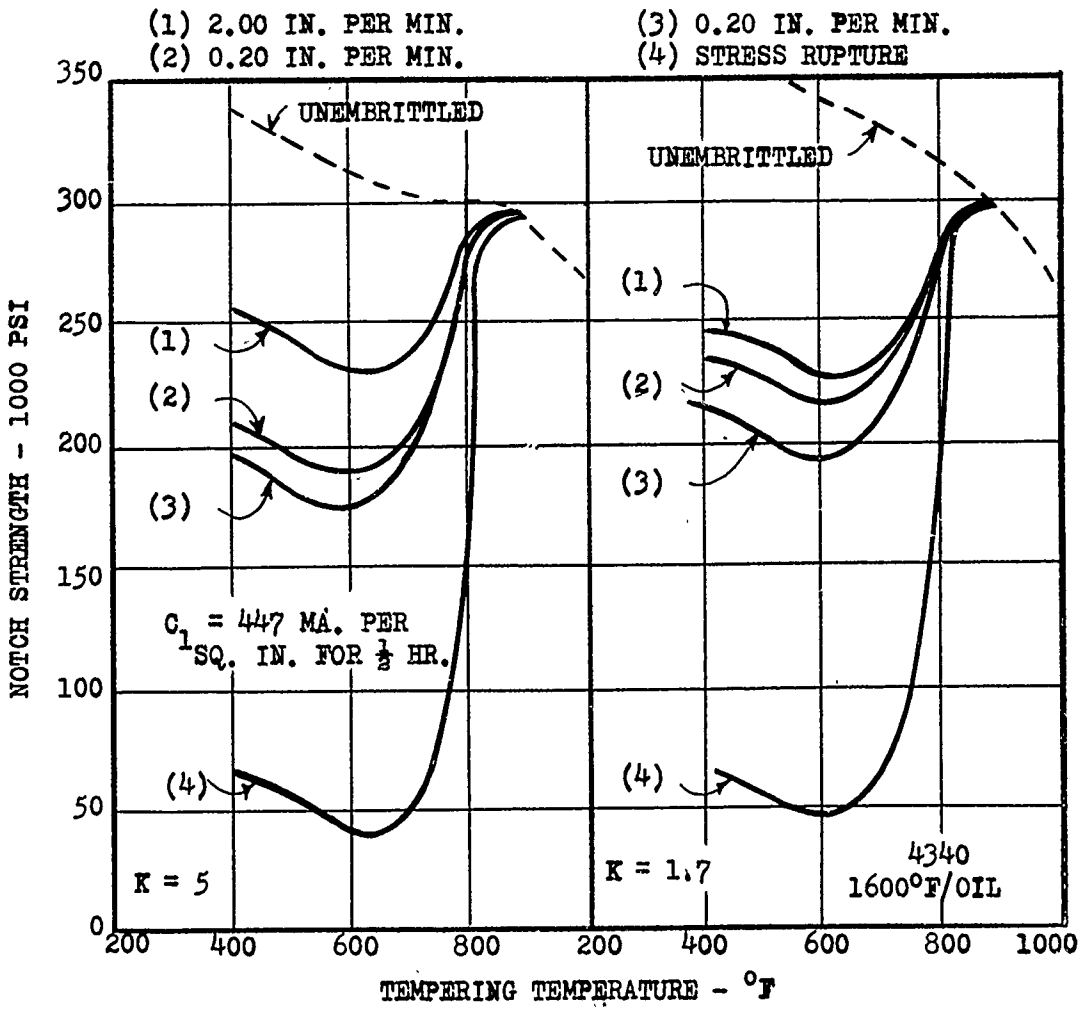

FIG. 9 EFFECT OF LOADING RATE ON THE NOTCH STRENGTH OF CATHODICALLY EMBRITTLED (C_1) 4340 STEEL.

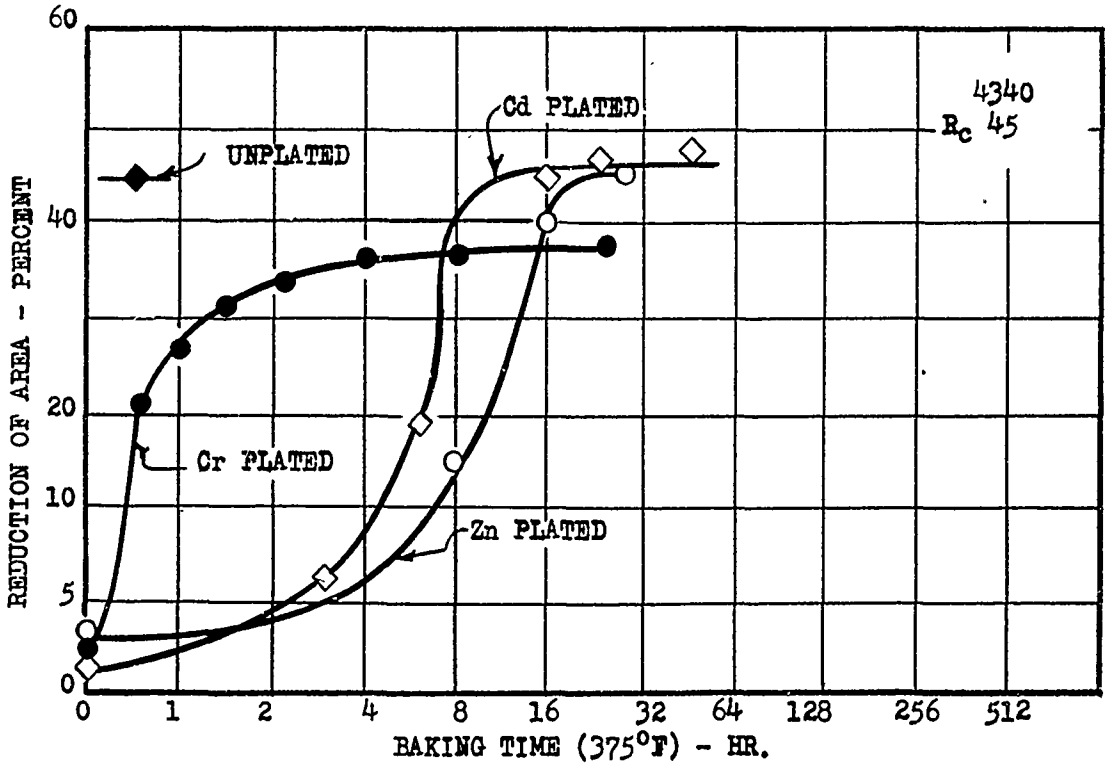

FIG. 10 EFFECT OF BAKING TIME ON HYDROGEN EMBRITTLEMENT OF CHROMIUM-, CADMIUM-, AND ZINC-PLATED SPECIMENS.