AD A950110

Technical document

MK 112 ASROC launcher digital control system study

D. L. Buck, D. W. Doherty, and R. W. Nowll

Technical Document 57

April 1969

NELC/TD-57

Naval Electronics Laboratory Center
San Diego, California 9215

403 940

This document has been approved for public release and sale; its distribution is unlimited.

DDC FILE COPY

GENERAL CONTENTS

PART 1. COMPUTER PROGRAM SPECIFICATIONS, GENERAL . . . *3*

PART 2. COMPUTER PROGRAM PERFORMANCE SPECIFICATION . . . *15*

PART 3. COMPUTER PROGRAM DESIGN SPECIFICATION . . . *41*

PART 4. COMPUTER PROGRAM OPERATOR'S MANUAL . . . *127*

PART 5. COMPUTER PROGRAM TEST PLAN . . . *141*

PART 6. COMPUTER PROGRAM TEST SPECIFICATION . . . *151*

APPENDIX: FORMAT FOR AN OPERATIONAL DIGITAL LAUNCHER CONTROL PROGRAM . . . *195*

NOTE

A detailed table of contents for each part of this volume is located immediately ahead of each Part.

Accession For
NTIS GRA&I
DDC TAB
Unannounced
Justification
Letter on file
Distribution/
Availability Codes
Avail and/or
Dist Special
A

UNANNOUNCED

REVERSE SIDE BLANK

PART 1

COMPUTER PROGRAM SPECIFICATIONS, GENERAL

REVERSE SIDE BLANK

CONTENTS

1.0 PURPOSE . . . *7*

2.0 SCOPE . . . *7*
- 2.1 Computer Program Performance Specifications . . . *7*
- 2.2 Computer Program Design Specifications . . . *8*
- 2.3 Computer Program Operator's Manual . . . *8*
- 2.4 Computer Program Test Plan . . . *8*
- 2.5 Computer Program Test Specification . . . *8*

3.0 APPLICABILITY . . . *9*

4.0 REFERENCE DOCUMENTS . . . *9*

5.0 EXPLANATION OF TERMS . . . *10*
- 5.1 Executive . . . *10*
- 5.2 Launcher Order . . . *10*
- 5.3 Launcher Position . . . *11*
- 5.4 Loop Error . . . *11*
- 5.5 Program . . . *11*
- 5.6 Program Initialization . . . *11*
- 5.7 Command Selector Control Panel . . . *11*
- 5.8 Routine . . . *12*
- 5.9 Symbology . . . *12*

6.0 EXPLANATION OF VOLUME FORMAT . . . *13*

REVERSE SIDE BLANK

1.0 PURPOSE

This study of the MK 112 ASROC Launcher Digital Control System* developed at the Naval Electronics Laboratory Center (NELC) is intended for use by agencies and personnel concerned with the development of digital fire-control techniques. The program documented herein does not in any sense furnish an operational entity, but does demonstrate the feasibility of launcher control by digital techniques and forms a basis from which the launcher control portion of an operational program can be developed. The program is designed to exercise both train and elevation functions simultaneously.

2.0 SCOPE

This volume comprises a comprehensive description of the computer program designed, implemented, and tested by NELC. For convenience of use, all specifications pertinent to the program have been compiled within this volume.

Parts 1 to 6 contain all information pertinent to each of the respective program areas. As a prerequisite for fully understanding the material contained in this volume, the reader should be familiar with the UNIVAC Type 1218 (CP 789) Digital Computer and Trim II (field-data code) programming language. Reference to applicable documents concerning the computer and the Trim II language is made in Section 4.0, Part 1.

2.1 Computer Program Performance Specifications

Part 2 describes the design of parameters for the computer program in terms of performance criteria and hardware constraints. It also contains a comprehensive description of the simulation techniques employed in creating an artificial launcher environment that parallels as closely as possible the operational environment.

Prepared by the Naval Electronics Laboratory Center Code S360, in support of the Antisubmarine Warfare Project Office (ASWPO 2021. This task was directed under 63[illegible]42 S31-03 10572, NELC Task N201.

2.2 Computer Program Design Specifications

Part 3 defines the program design and contains a detailed description of the overall program and individual routines. Also included is a complete set of flow diagrams. Section 5, Part 3, includes a printed output listing of the complete program.

2.3 Computer Program Operator's Manual

Part 4 provides complete instructions for program operation. It presumes a basic knowledge of the Type 1218 Digital Computer and familiarity with its operating controls.

2.4 Computer Program Test Plan

Part 5 presents a plan for testing the computer program.

2.5 Computer Program Test Specification

Part 6 describes the detailed requirements and parameters of the program test as conducted at the Naval Nuclear Weapons Training Center Pacific (NWTCP) during the period 10 July 1968 to 28 August 1968. Also included in Part 6 is a comprehensive description of the hardware and equipment employed in the tests.

3.0 APPLICABILITY

This volume is applicable to organizations and personnel concerned with the development and implementation of computer programs for weapons controlled by digital techniques.

4.0 REFERENCE DOCUMENTS

The following documents contain reference material applicable to the content of this volume.

a. NAVWEPS OD 14430, "Factory Acceptance Test Power Drive MK 61 and MK 62, Power Amplifier MK 153 "

b. Naval Underwater Weapons Research and Engineering Station TM 379, *Operational Tests of the ASROC Launcher MK 112 with Simulated ASROC and ERA Missile Loads*, by W. B. Cullison, CONFIDENTIAL, November 1966

c. Naval Electronics Laboratory Center Drawing RAAC 340.1-2230, *Encoder-Synchro Assembly*, March 1968

d. Univac PX 2526, 4 vols., *Technical Manual For Type 1218 Digital Data Computer*, May 1964

e. Naval Ordnance Systems Command WS-8506, *Requirements For Digital Computer Program Documentation*, 15 December 1966

f. Bureau of Ordnance Drawing LD 541510, *ASROC Weapon System FCG Mk 111 Functional Schematics For DD 710 Class Ships*, 28 June 1961

g. Univac PX 2910, Revision A, *Programmers Reference Manual for UNIVAC 1218 Computer*, December 1963

h. Bureau of Ships NavShips 94093(A), v.2, *Technical Manual For Digital Data Converter CV-1123/USQ-20(V), Section 8, v.2*, 14 June 1963

i. Naval Electronics Laboratory Center, *Computer Program Performance Specifications For the MK 112 ASROC Launcher*, by D. L. Buck, 28 June 1968

j. Bureau of Weapons NavWeps OP 2385, v.2 (Revision 1, Change 2), *Launching Group MK 16 Mods 1, 2, 3 and 4, Train Power Drive MK 61 Mod 0 and 1, Elevation Power Drive MK 62 Mods 0 and 1, and Power Drive Amplifier MK 153 Mod 0 Amplifier Chassis; Description and Maintenance*, 14 May 1965

k. Navy Electronics Laboratory Report 1354, *Digital Control of the Guided Missile Launching System MK 13*, by J. B. Slaughter and D. W. Doherty, CONFIDENTIAL, 11 February 1966

l. Naval Underwater Weapons Research and Engineering Station TM 392, *Development of a Linear Math Model For the ASROC Launcher MK 112 Power Drives*, by E. W. Wilbur, April 1968

5.0 EXPLANATION OF TERMS

Paragraphs 5.1 through 5.9 define the terms and equipment names referred to in the specifications contained in this volume. Since the terms are not unique, the explanations given here will clarify their usage in this study.

5.1 Executive

The Executive is the overall control routine for the program. This routine, as a function of manual selection on the Command Selector Control Panel, initializes the program and calls each routine in its proper sequence.

5.2 Launcher Order

The Launcher Order is a driving function, as opposed to Launcher Position. The order implies physical movement of the launcher to a new position.

5.3 Launcher Position

The Launcher Position is the actual position as measured by a position feedback device.

5.4 Loop Error

The Loop Error is defined as the difference, in degrees, between the actual Launcher Position and the ordered position.

5.5 Program

The term "Program" refers to the entire group of routines that have been assembled to demonstrate the feasibility of digital launcher control.

5.6 Program Initialization

The Program Initialization is the procedure by which program operation is started, including table generation. Once initialized, the program will cycle in response to inputs from the Command Selector Control Panel.

5.7 Command Selector Control Panel

The Command Selector Control Panel is a special-purpose panel that provides a means of introducing simulated fire-control-system inputs to the program.

5.8 Routine

This item, "Routine," describes an entity that in a larger program might be termed a subprogram.

5.9 Symbology

Certain symbols are employed to identify various fire-control positions and functions. The following symbols will be used:

Bdg'	=	Launcher train position
Edg'	=	Launcher elevation position
$Bdg1'$	=	Launcher train order
$Edg1'$	=	Launcher elevation order
$DBdg'$	=	Launcher train rate (velocity)
$DEdg'$	=	Launcher elevation rate (velocity)
$DBdg1'$	=	Launcher train rate order
$DEdg1'$	=	Launcher elevation rate order
$Bdg1' - Bdg'$	=	$e(Bdg')$ = Train error as a function of launcher position
$Edg1' - Edg'$	=	$e(Edg')$ = Elevation error as a function of launcher position

Special symbols, of the following form, were created to meet the requirements for expressing digital functions:

$f(e(Bdg'))$	=	Control input to Zeltex train amplifier, consisting of a modified error signal summed with feedforward velocity signal.
$f(e(Edg'))$	=	Control input to the Zeltex elevation amplifier, consisting of a modified error signal summed with the feedforward velocity signal.

6.0 EXPLANATION OF VOLUME FORMAT

The program specifications described in Section 2.0, Part 1, are contained in this volume as Parts 2 through 6. Each specification is a complete entity and, in deviation from normal documentation practice, has been sectionalized independently so that it may, if desired, be removed from the volume for user convenience. Following Part 6 is an appendix that contains a suggested format for an operational digital launcher control program.

REVERSE SIDE BLANK

PART 2

COMPUTER PROGRAM PERFORMANCE SPECIFICATION

REVERSE SIDE BLANK

CONTENTS

1.0 SCOPE . . . *19*
- 1.1 Identification . . . *19*
- 1.2 Functional Summary . . . *19*

2.0 APPLICABLE DOCUMENTS . . . *19*
- 2.1 System Performance Specifications . . . *19, 20*
- 2.2 Inter-Subsystem Specifications . . . *20*
- 2.3 Miscellaneous Documents . . . *20*

3.0 REQUIREMENTS . . . *21*
- 3.1 Introduction . . . *21, 26*
- 3.2 Functional Summary . . . *26, 28*
- 3.3 Detailed Functional Requirements . . . *28*
- 3.4 Adaptation . . . *30, 31*
- 3.5 Input/Output Interfaces . . . *31*
- 3.6 Formats . . . *31*

4.0 QUALITY ASSURANCE PROVISIONS . . . *31*

5.0 PREPARATIOr FOR DELIVERY . . . *31*

6.0 NOTES . . . *32*

7.0 ANALOG COMPUTER SiMULATION . . . *32*
- 7.1 Nonlinear Error-Shaping Curve . . . *32*
- 7.2 Small-Signal Compensation . . . *37*
- 7.3 Mode Switching . . . *38*
- 7.4 Amplifier, Torque Motor, and Servo Valve . . . *38*
- 7.5 Saturation Consideration . . . *39*
- 7.6 Piston and Slide Block . . . *39*
- 7.7 Conclusions . . . *40*

ILLUSTRATIONS

2-1 ASROC launcher functional block diagram . . . *22*

2-2 ASROC Mk 112 launcher digital system block diagram . . . *23*

2-3 Configuration, block diagram . . . *24*

2-4 Electrohydraulic power drive . . . *25*

2-5 Computer program, functional block diagram . . . *27*

2-6 ASROC launcher block diagram . . . *33*

2-7 ASROC launcher analog computer diagram . . . *35*

1.0 SCOPE

1.1 Identification

Part 2 describes the performance requirements for the computer program used to test the feasibility of digital control of the ASROC Mk 112 Launcher.

1.2 Functional Summary

The computer program is used to provide inputs to the ASROC Mk 112 Launcher for testing its responses in two different configurations. In one configuration, the launcher position is inputted via keyset central (KCS) and in the other, the launcher position is inputted by shaft position encoders. This specification describes the program used for testing in terms of system functional requirements. It includes an analysis of the ASROC launcher power drives and presents the characteristics that the digital control must display. Section 7.0, Part 2, contains a supplementary description of the analog computer simulation of the train power drive.

2.0 APPLICABLE DOCUMENTS

2.1 System Performance Specifications

a. NAVWEPS OD 14430, "Factory Acceptance Test Power Drive Mk 61 and Mk 62, Power Amplifier Mk 153"

b. Naval Underwater Weapons Research and Engineering Station TM 379, *Operational Tests of the ASROC Launcher MK 112 With Simulated ASROC and ERA Missile Loads*, by W. B. Cullison, CONFIDENTIAL, November 1966

c. Naval Underwater Weapons Research and Engineering Station TM 392, *Development of a Linear Math Model For the ASROC Launcher MK 112 Power Drives*, by E. W. Wilbur, April 1968

d. Bureau of Weapons NavWeps OP 2385, v.2, (Revision 1, Change 2), *Launching Group MK 16 Mods 1, 2, 3 and 4, Train Power Drive MK 61, Mods 0 and 1, Elevation Power Drive MK 62 Mods 0 and 1, and Power Drive Amplifier MK 153 Mod 0 Amplifier Chassis; Description and Maintenance*, 14 May 1965

e. Bureau of Ordnance Drawing LD 541510, *ASROC Weapon System FCG Mk 111 Functional Schematics For DD 710 Class Ships*, 28 June 1961

2.2 Inter-Subsystem Specifications

a. Naval Electronics Laboratory Center Drawing RAAC 340.1-2230, *Encoder-Synchro Assembly*, March 1968

b. Univac PX 2526, 4 vols., *Technical Manual For Type 1218 Digital Data Computer*, May 1964

c. Univac PX 2910, Revision A, *Programmers Reference Manual For UNIVAC 1218 Computer*, December 1963

d. Bureau of Ships NavShips 94093(A), v.2, *Technical Manual For Digital Data Converter CV-1123/USQ-20(V), Section 8, v.2*, 14 June 1963

2.3 Miscellaneous Documents

a. Navy Electronics Laboratory Report 1354, *Digital Control of the Guided Missile Launching System Mk 13*, by J. B. Slaughter and D. W. Doherty, CONFIDENTIAL, 11 February 1966

3.0 REQUIREMENTS

3.1 Introduction

The MK 112 launcher power drives for train and elevation consist of two separate electrohydraulic systems. Since the train and elevation power drives are functionally identical, only the train power drive is discussed. The test program is, however, designed to exercise both the train and elevation power drives. The normal configuration of the train system is shown in the block diagram (fig. 2-1). The design of the digital control system is based on two considerations: (1) the dual-mode controller approach to error compensation, and (2) the system configuration shown in figure 2-2. The conventional, continuous compensation for the power drives is not used in the digital system and therefore will not be discussed. Figures 2-2 and 2-3 show the NELC digital system configuration. The dual-mode controller consists of a nonlinear error curve for large-signal compensation and a biquadratic lag controller for small-signal compensation. This compensation is performed by the digital computer. The selection of a controller is based on error magnitude. The error-shaping curve is used for error compensation for all error magnitudes greater than 1 degree. Error compensation is switched to the linear controller on a *decreasing* error signal when its magnitude becomes less than or equal to 1/2 degree. This small signal controller is switched, out of the loop and the error curve, back in on an *increasing* error signal when the error magnitude exceeds 1 degree. Thus this asymmetrical operation allows, after insertion into the loop at 1/2-degree error, the linear controller to remain in the loop until error magnitude is greater than 1 degree. Feedforward velocity is calculated and filtered by the computer and added to the output of the dual-mode controller. The resultant sum is then outputted as a dc voltage and summed with the stroke feedback voltage. This resultant signal is called velocity error.

The small-signal compensation is a low-pass filter with a steady-state gain of 20 and is designed from the linear model of the power-drive system. The large-signal, nonlinear error-shaping curve is used to drive the launcher into the linear, small-signal region with a predetermined error/velocity relationship. Its design is based on the nonlinear characteristics of the power drive. The electrohydraulic power drive (fig. 2-4) operates in the following manner: A dc signal from the control amplifier is applied to the torque motor windings. Linear motion less than or equal to ± 0.0075 inch is transmitted by the armature of the motor to position the paddle within the servo valve. The in-and-out position of the paddle directs the flow of hydraulic fluid to piston X, the first stage of a two-stage hydraulic amplifier. Piston X controls the flow and direction of fluid to the ends of control pistons Z and Y. The control piston in the second stage of the hydraulic

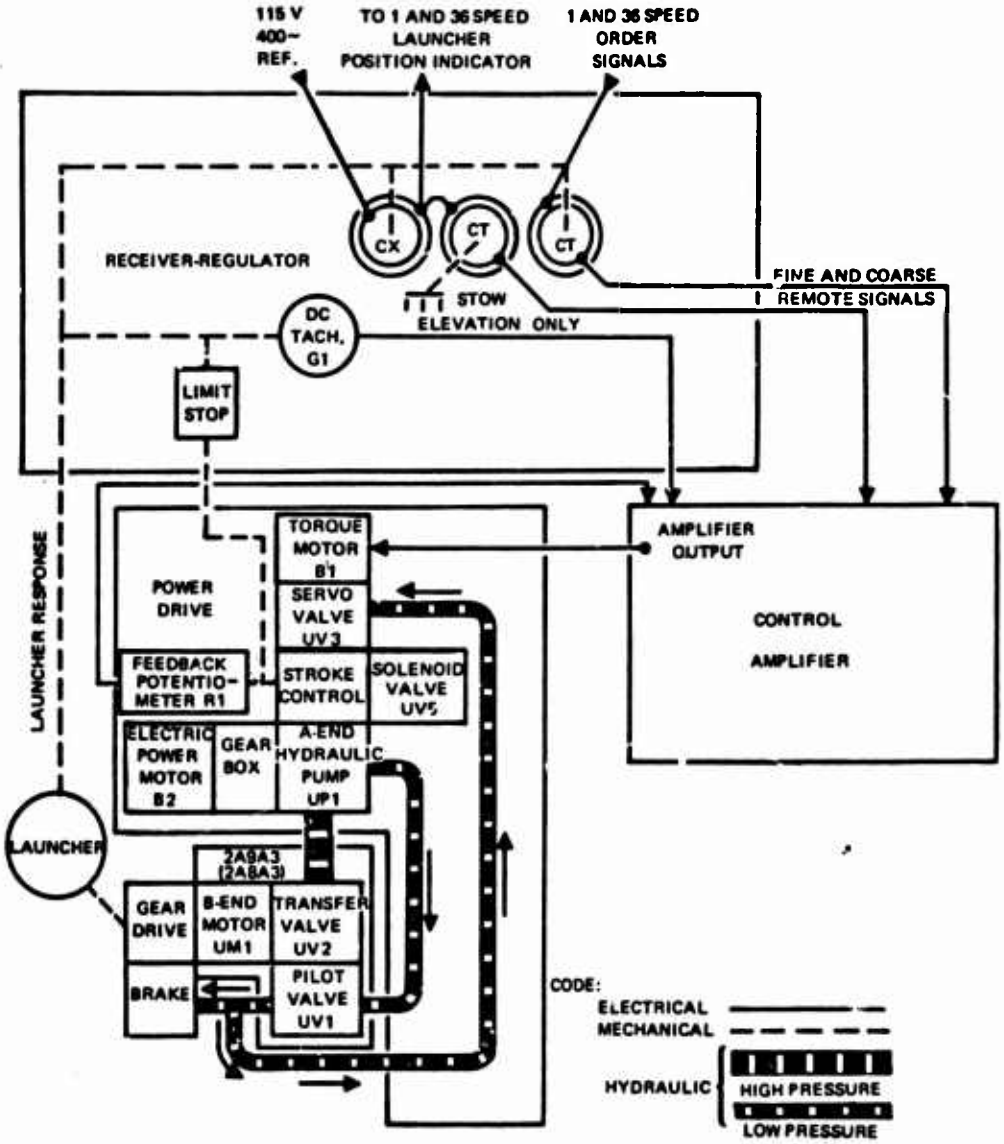

Figure 2-1. ASROC launcher functional block diagram.

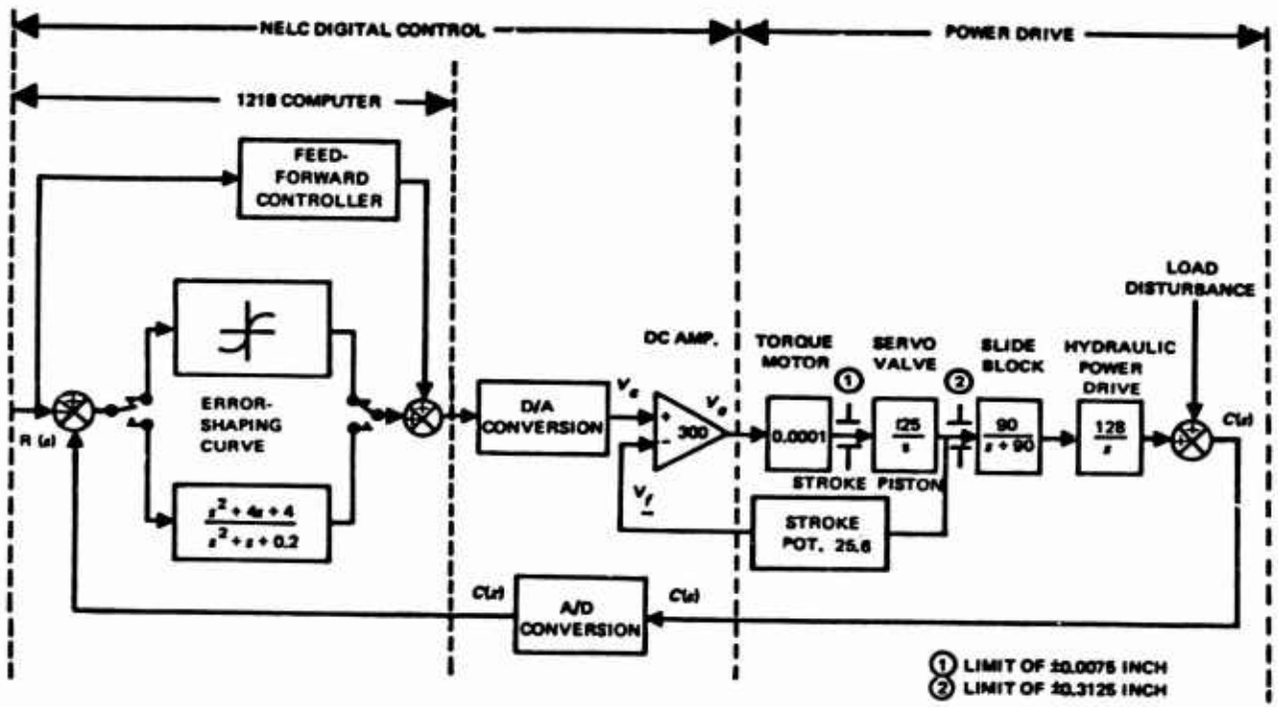

Figure 2-2. ASROC Mk 112 launcher digital system block diagram.

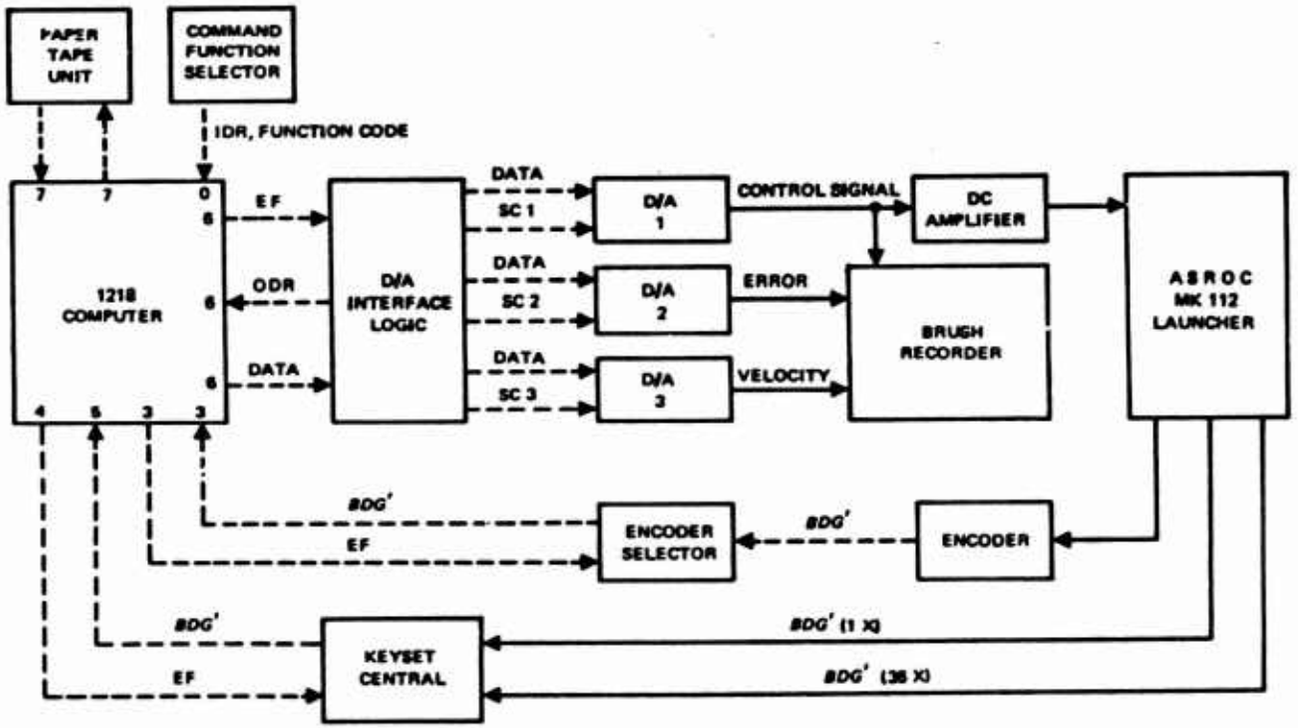

Figure 2-3. Configuration, block diagram.

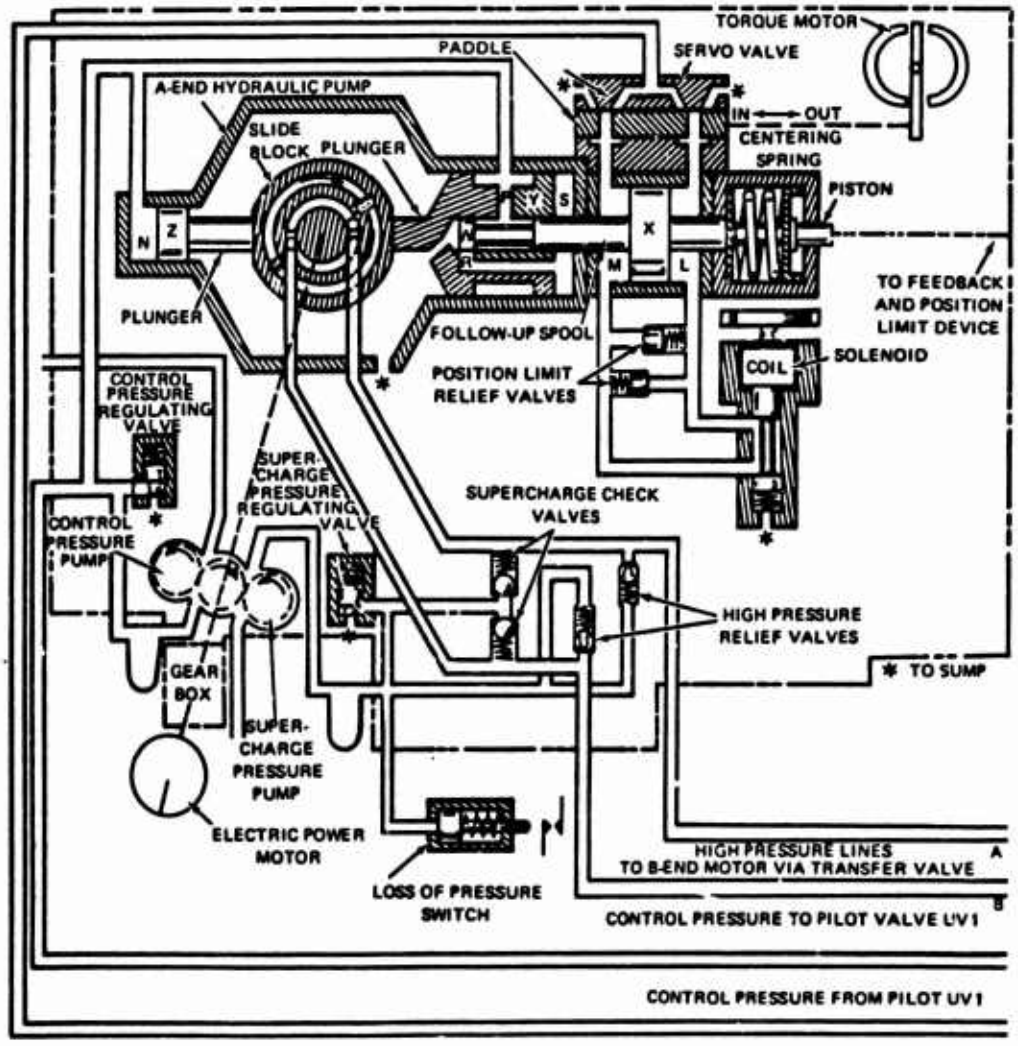

Figure 2-4. Electrohydraulic power drive.

amplifier controls the position of the slide block around the pistons in the cylinder body of the A-end hydraulic pump. The displacement of the block, which is proportional to launcher velocity, controls the volume and direction of flow of high-pressure fluid to the B-end hydraulic motor. The B-end motor positions the launcher via the gear train.

The digital program will provide plant dynamic compensation as well as position orders. Error calculation will be accomplished within the 1218 computer by comparing the digital position orders with the actual Launcher Position via signals converted to digital form by either the CV-1123/USQ-20(V) Keyset Central or the 15-bit shaft-position encoders.

3.2 Functional Summary

The digital program for testing the feasibility of digital control of the Mk 112 launcher system will be designed to be used with the UNIVAC 1218 computer. This program will provide comprehensive tests of both train and elevation operation and will be loaded from the UNIVAC 1232 I/O Console using Input Channel 7. Figure 2-3 shows the major equipment interfaces between the digital computer and the Mk 112 launcher. The position command (determined by the switch configuration of the Command Selector Control Panel) will be compared to the Launcher Position and any error present will be computed. Then the error signal is compensated by a digital filter or a nonlinear error-shaping function, depending on error magnitude.

The resultant control signal is summed with the feedforward velocity signal and transmitted on Channel 6 of the 1218 to the digital-to-analog (D/A) interface logic and then to D/A-1. The dc output of D/A-1 and the tachometer feedback are summed in the dc amplifier. This amplifier drives the torque motor of the launcher power drive, thereby closing the loop. The control signal from D/A-1, the error signal from D/A-2, and the launcher velocity from D/A-3 are displayed on a Brush Recorder (fig. 2-3). Output Channels 3 and 4 are used for external function commands to the Encoder Selector and Keyset Central, respectively. Input Channels 3 and 5 are used to receive Launcher Position information from either the Encoder Selector or Keyset Central. The Command Function Selector signal is received on Channel 0. The basic functional requirements of the computer program are shown in the flow diagram (fig. 2-5).

The program can be compartmented into seven major functions described in greater detail in the next sections. These functions are:

a. Generate tables, initialize, and clear cells.

b. Perform timing and establish remote-control operations.

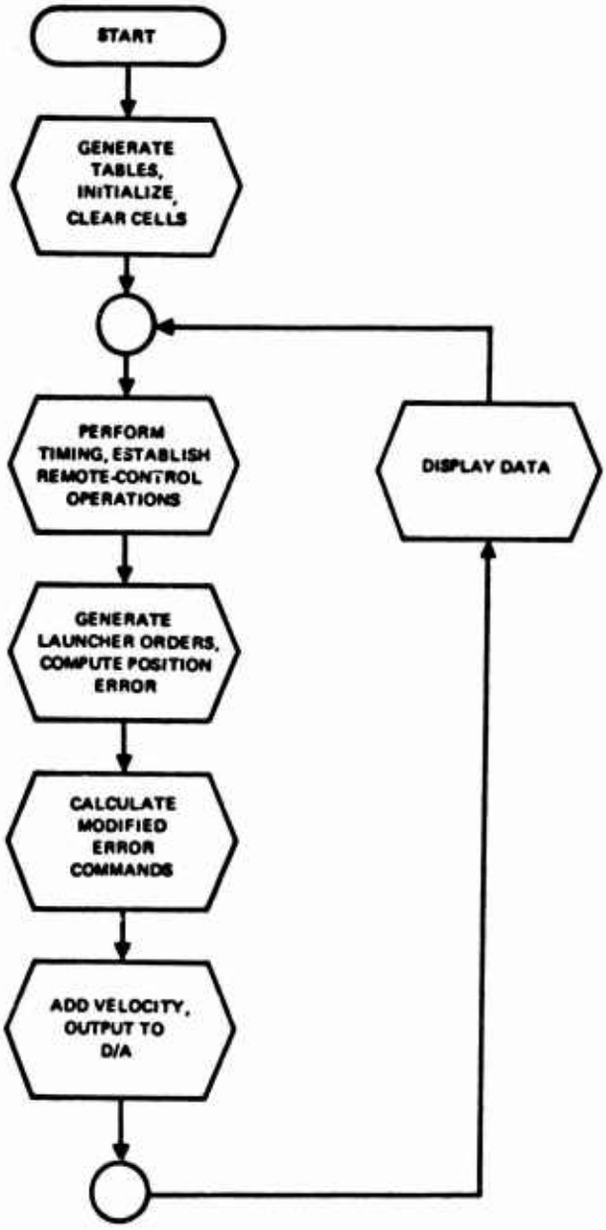

Figure 2-5. Computer program, functional block diagram.

c. Generate launcher orders and compute position error.

d. Form and output launcher orders to D/A.

e. Calculate modified error commands.

f. Add velocity and output to D/A.

g. Display data.

3.3 Detailed Functional Requirements

The computer program will be required to perform the major functions outlined in Section 3.2. The specific requirements are included in the paragraphs that follow.

3.3.1 GENERATE TABLES, INITIALIZE, AND CLEAR CELLS

The first major function of the computer program is to prepare itself for a test operation. The program will be required to modify constants, clear past history, and set the initial conditions for a specific test. The program will be required to generate certain tables used in the runs.

3.3.2 PERFORM TIMING AND ESTABLISH REMOTE-CONTROL OPERATION

This is the second major function of the computer program. The basic system sampling rates will be established by using internally generated interrupts. The computer internal clock produces 1-kHz pulses. These will be utilized by a countdown subroutine to establish the desired sampling interval. The Command Function Selector will be used to specify the desired Launcher Position command. This portion of the program will establish the necessary communication with that panel.

3.3.3 GENERATE LAUNCHER ORDERS AND COMPUTE POSITION ERROR

This portion of the computer program is concerned with the generation of the Launcher-Position and velocity orders and the computation of the closed-loop position error. Step, ramp, and sinusoidal inputs, with and without additive noise, will be generated. The velocity order will be determined from the position order and passed through a 1st-order infinite memory filter for smoothing purposes. Loop error will be determined by the use of a subroutine comparing the position order and the feedback quantity from the Encoder or KSC.

3.3.4 CALCULATE MODIFIED ERROR COMMANDS

The computer will be required to carry out the compensation functions. The functions of the compensation selector will be performed by a routine that examines the error magnitude and decides whether the small-signal controller or the error curve should be used to modify the error signal. For errors outside the synchronized region, the error curve table will be utilized. The computer will modify the error by using a table lookup. For errors within the synchronized region, a linear digital filter subroutine will be utilized to develop the required control signals.

3.3.5 ADD VELOCITY AND OUTPUT TO D/A

Feedforward velocity will be added to the modified error to reduce the steady-state position error to a velocity command signal. The modified error commands will be applied to a D/A with dc voltage output.

3.3.6 DISPLAY DATA

The last major function of the computer is to provide the necessary communication with the recording equipment to allow an on-line Brush Recorder display of the various quantities of interest (fig. 2-3).

3.4 Adaptation

3.4.1 GENERAL ENVIRONMENT

Not applicable to this specification.

3.4.2 SYSTEM PARAMETERS

Certain constants used in the feasibility program will be capable of change at the discretion of the test conductor. The error window size may be varied to alter the crossover characteristics of the small- and large-signal controllers.

The error curve table may also be modified to show the effects on system performance. The constants that constitute this table will be programmed in such a manner as to facilitate modification.

3.4.3 SYSTEM CAPACITIES

Since this program is primarily designed for the purpose of determining the feasibility of digital control of the Mk 112 launcher, little consideration has been given to optimizing the time and storage allocations required. Many of the

functions performed would be unnecessary in an operational program. Approximately 7 milliseconds (msec) should be required for a complete program cycle. Approximately 4,000 cells of memory will be used for tables and program instructions.

3.5 Input/Output Interfaces

The computer program shall be designed to meet the requirements of input/output imposed by the intersubsystem specification defined in Section 2.2, Part 2.

3.6 Formats

The computer program will be written using the UNIVAC 1218 Trim II language (field-data code). All labels used in the program will be suffixed by the letter "N," the identification letter assigned to NELC. No requirements on input/output, displays, and operation control formats exist at this time.

4.0 QUALITY ASSURANCE PROVISIONS

Not applicable to this specification.

5.0 PREPARATION FOR DELIVERY

Not applicable to this specification.

6.0 NOTES

The Computer Program Design Specification, Part 3, provides a more comprehensive treatment of the program functions.

7.0 ANALOG COMPUTER SIMULATION

A block diagram of the modified system, including transfer functions of the various launcher components, is shown in figure 2-6. These transfer functions were used in developing the analog computer simulation of the launcher system. A time-scaling factor of 10 was used in the simulation to slow the solution, thereby providing more accurate recording of results on the *X-Y* plotter. Simulation was performed on a PACE TR-48 computer. A description of key portions of the simulation is included in the following paragraphs, 7.1 through 7.7.

7.1 Nonlinear Error-Shaping Curve

The nonlinear error-shaping curve can be approximated by the circuit shown in figure 2-7. In this circuit a straight-line approximation using a soft limiter is employed. For small values of error magnitude, the soft limiter on the output of Amplifier 01 has no effect. Therefore the gain is equal to the sum of the gains of the two paths and is represented by line *A*. As error magnitude increases, the soft limiter starts to take effect and the gain is reduced, *i.e.* it approaches line *B*. The result is a smooth curve that closely approximates the true error-shaping curve.

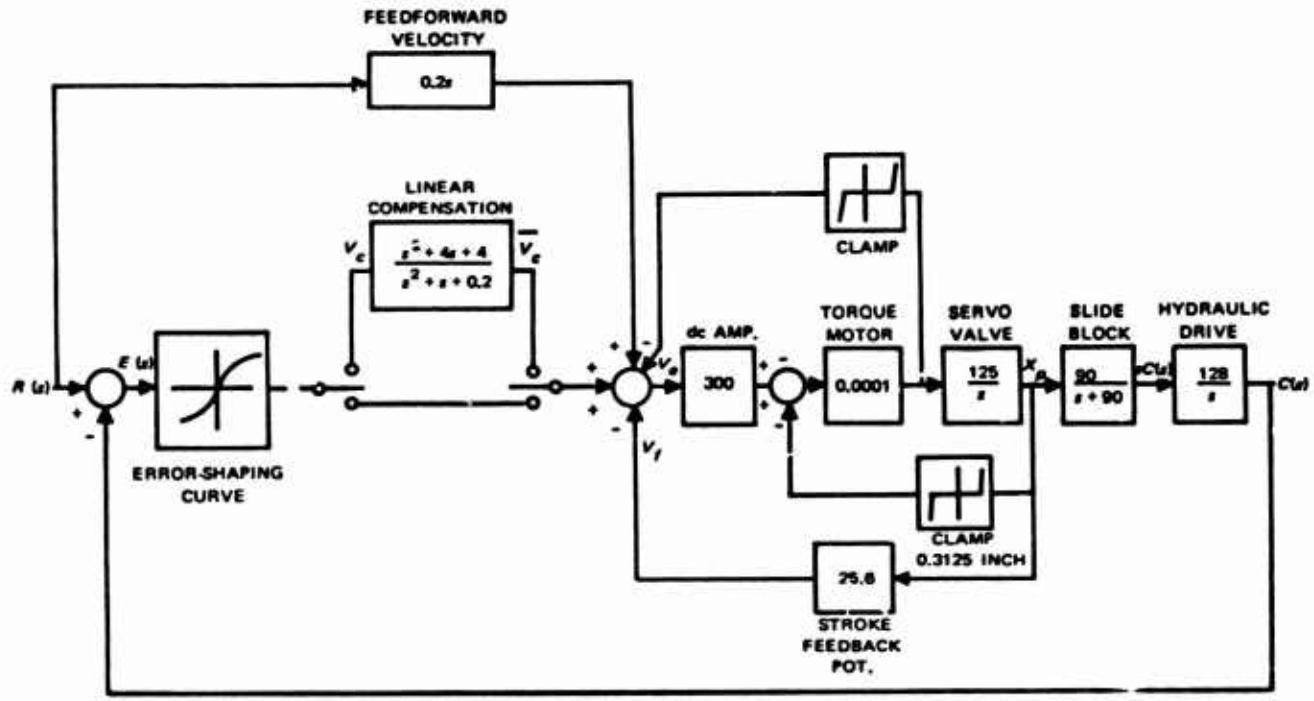

Figure 2-6. ASROC launcher block diagram.

REVERSE SIDE BLANK

REVERSE SIDE BL

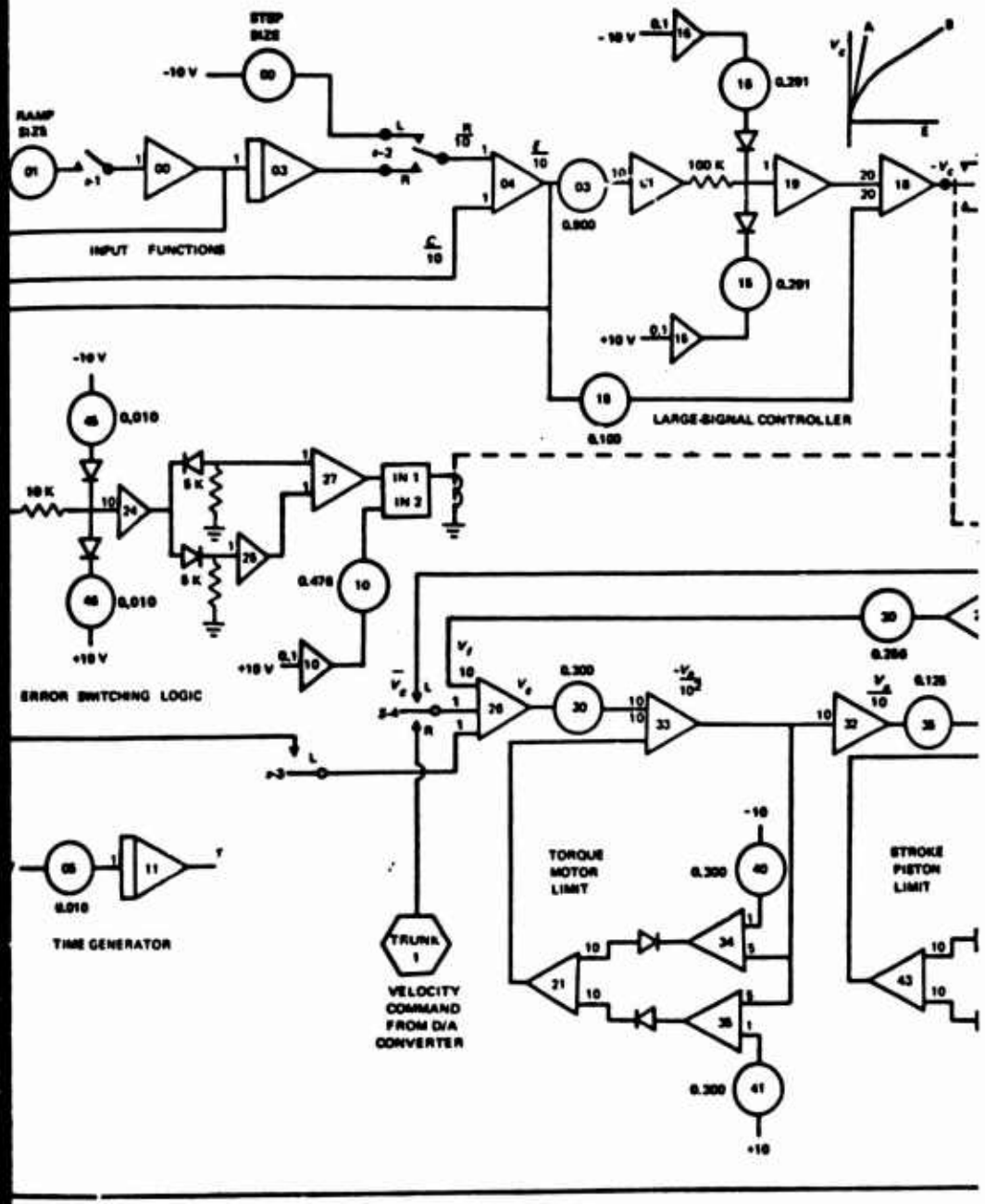

Figure 2-7. ASROC launcher analog computer diagram.

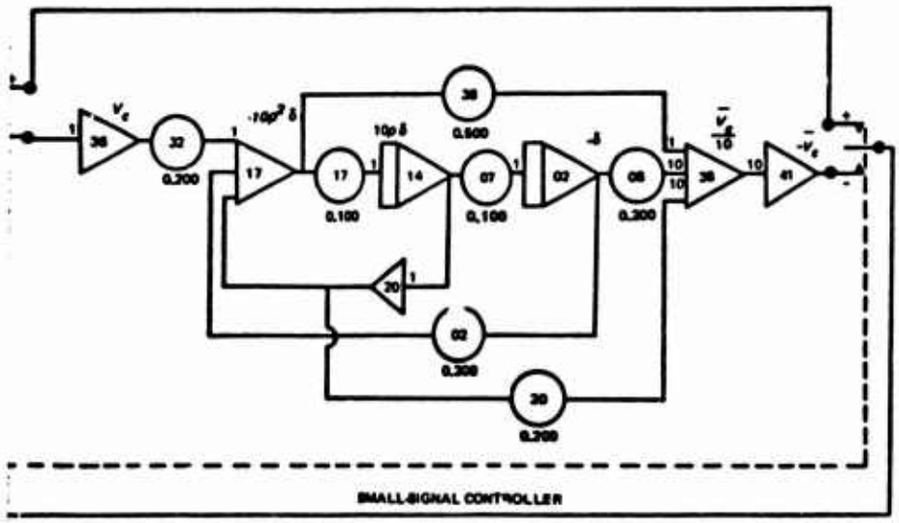
SMALL-SIGNAL CONTROLLER

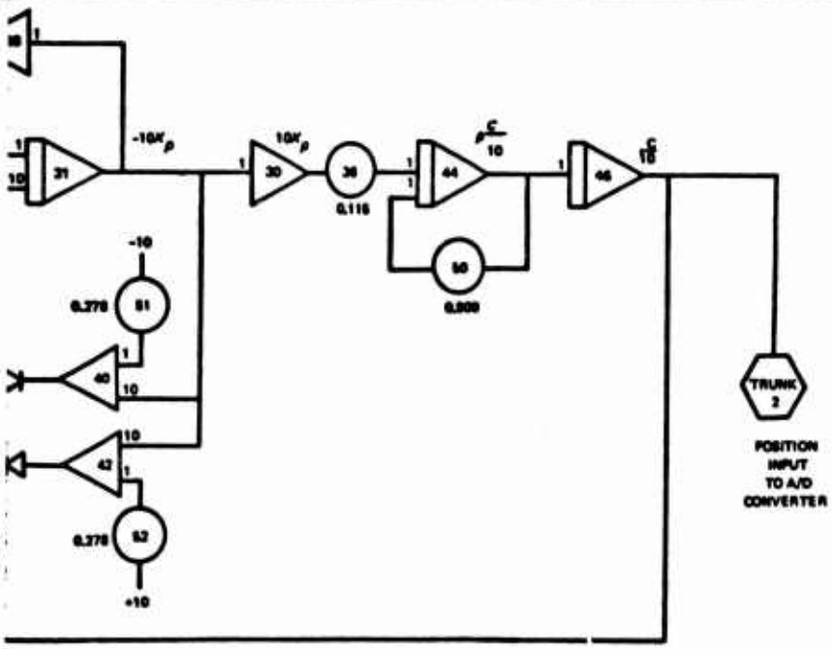
TRUNK 2
POSITION INPUT TO A/D CONVERTER

7.2 Small-Signal Compensation

The small-signal compensation transfer function is given in Laplace transform notation as:

$$\frac{\overline{V}_c}{V_e} = \frac{5s^2 + 20s + 20}{5s^2 + 5s + 1} \tag{1}$$

Implementation of this equation requires the introduction of a dummy variable, δ.

Let

$$V_e = (5s^2 + 5s + 1)\,\delta = 5s^2\,\delta + 5s\delta + \delta$$

Solving for the highest order of s,

$$s^2\delta = 0.2V_e - s\delta - 0.2\delta$$

Time scaling by a factor of 10, letting $s = 10p$,

$$10^2p^2\delta = 0.2V_e - 10p\delta - 0.2\delta \tag{2}$$

Referring back to equation (1), let

$$\overline{V}_c = 5s^2\delta + 20s\delta + 20\delta$$

Time scaling this equation

$$\overline{V}_c = 5(10^2p^2\delta) + 20(10p\delta) + 20\delta$$

$$\frac{\overline{V}_c}{10} = 0.5(10^2p^2\delta) + 2(10p\delta) + 2\delta \tag{3}$$

Implementation of equations (2) and (3) leads to the small-signal compensation circuit portion of figure 2-7.

7.3 Mode Switching

The switching circuit is designed to switch the small-signal compensation network in when error magnitude falls below 0.5 degree. This operation may be accomplished using the relay comparator circuit (fig. 2-7). The output of Amplifier 27 is proportional to $\left|\frac{\varepsilon}{10}\right|$. This absolute value is applied to the input of Relay Comparator 1 together with the bias from Amplifier 10, which controls the switching window size. This bias is adjusted so that as the signal decreases to 0.5 degree the comparator will be in the " – " position, thereby inserting the small-signal compensation into the system loop. When the error is greater than 0.5 degree, the comparator is in the " + " position, which bypasses the small-signal compensation.

The error curve remains in the loop at all times since it has a gain of 1 when the error is less than 0.5 degree and therefore does not affect the small-signal controller's operation.

7.4 Amplifier, Torque Motor, and Servo Valve

The open-loop transfer function, X_p / V_e for the amplifier, torque motor, and servo valve is,

$$\frac{X_p}{V_e} = \frac{3.75}{s}$$

or

$$sX_p = 3.75 V_e$$

Time scaling,

$$10\,pXp = 3.75\,V_e$$

7.5 Saturation Consideration

The maximum output of the amplifier is 125 V dc whereas only 75 V dc are needed to saturate the torque motor to ± 0.0075 inch of displacement. This corresponds to an acceleration saturation of 120 deg/sec per second. To incorporate acceleration saturation in the simulation, a hard limiter on Amplifier 33 was used. If the amplifier output magnitude is less than ± 75 V, the limiter circuit will not affect the circuit operation. The two diodes remain reverse-biased. When the amplifier output exceeds 75 V, one of the diodes (depending on the sign of V_a) will conduct, thus forming a high-gain negative feedback path around Amplifier 33. The effect of this high-gain negative feedback is to immediately cancel the normal input to the amplifier and cause the output to remain at the desired limiting value.

Velocity saturation of the launcher is caused by the stroke piston limit of ± 0.3125 inch, thus limiting the velocity to approximately 40 degrees per second. A limit of the same type used for acceleration saturation is used around Integrator 31 to simulate velocity saturation.

7.6 Piston and Slide Block

The closed-loop transfer function $\frac{C}{X_p}$ of the piston and slide block may be calculated from figure 2-6:

$$\frac{C}{X_p} = \frac{(128)\,90}{s\,(s+90)}$$

Expanding and time scaling,

$$\frac{p^2C}{10} = 1.15(10X_p) - 0.9\,pC \qquad (4)$$

7.7 Conclusions

The analog computer simulation described in Section 7.0 of this Part was programmed on an Electronic Associates, Inc., PACE TR-48 analog computer. The simulation required is two-thirds of the full 48 amplifier complement of the computer. The computer has output voltage ranges of ±10 V full-scale, and careful consideration of maximum voltage outputs was maintained to prevent saturation problems. Slightly different programming techniques could be used with other types of computers that could optimize the use of computing components on those machines. The simulation has been designed to be readily used in a hybrid computing arrangement with the UNIVAC 1218 to provide a means of laboratory testing of the dual-mode controllers and the digital computer program.

PART 3

COMPUTER PROGRAM DESIGN SPECIFICATION

REVERSE SIDE BLANK

CONTENTS

1.0 SCOPE . . . *45*
- 1.1 Identification . . . *45*
- 1-2 Functional Summary . . . *45*

2.0 APPLICABLE DOCUMENTS . . . *45*
- 2.1 Performance Specification . . . *45*
- 2.2 Miscellaneous Documents . . . *46*

3.0 REQUIREMENTS . . . *46, 47, 48*
- 3.1 Functional Allocation/Description . . . *48*
- 3.2 Functional Description . . . *52*
- 3.3 Storage Allocation . . . *81*
- 3.4 Computer Program Functional Flow Diagrams . . . *83*
- 3.5 Control Functions . . . *83*
- 3.6 Data Base Definition . . . *83, 84*

4.0 QUALITY ASSURANCE . . . *90*

5.0 SUPPLEMENTARY STRUCTURAL DETAILS . . . *90*
- 5.1 General . . . *90*
- 5.2 Philosophy . . . *91*
- 5.3 Program Listing . . . *92*

ILLUSTRATIONS

3-1 Launcher test program, overall flow diagram . . . *53, 54, 55*
3-2 Noise table generator routine, flow diagram . . . *56, 57*
3-3 Error curve table generator routine, flow diagram . . . *58*
3-4 Sample period clock routine, flow diagram . . . *59*
3-5 Command Function Selector processing routine, flow diagram . . . *61*
3-6 Train position commands routine, flow diagram . . . *62, 63*
3-7 Elevation position commands routine, flow diagram . . . *64, 65*
3-8 Calculate feedforward velocity command routine, flow diagram . . . *67*
3-9 Input position via encoder routine, flow diagram . . . *68*
3-10 Input train position via Keyset Central routine, flow diagram . . . *70*
3-11 Input elevation position via Keyset Central routine, flow diagram . . . *71*
3-12 Calculate error routine, flow diagram . . . *72*
3-13 Error curve table lookup routine, flow diagram . . . *73*

ILLUSTRATIONS (Continued)

3-14 Complete controller calculations routine, flow diagram . . . *75*
3-15 Output to launcher routine, flow diagram . . . *76*
3-16 Calculate partial controller for next pass routine, flow diagram . . . *77*
3-17 Data to Brasi. Recorder routine, flow diagram . . . *79, 80*

TABLES

3-1 Functional allocation/description . . . *49, 50, 51*
3-2 Storage allocation . . . *81, 82*
3-3 Alphabetical item index . . . *84 (Continued through 89)*
3-4 Symbology . . . *91*
3-5 Program listing . . . *93 (Continued through 126)*

1.0 SCOPE

1.1 Identification

Part 3 contains all program design data for the ASROC Mk 112 Launcher Digital Control System as designed, implemented, and tested by NELC. The computer program was designed to demonstrate the feasibility of controlling the launcher by digital techniques, utilizing the UNIVAC 1218 (CP 789) Digital Data Computer. The program is self-contained and operates as an entity; therefore, all design information normally contained within the specification relating to computer subprograms has been integrated into Part 3.

1.2 Functional Summary

Since this is essentially a feasibility demonstration program, it provides for control of both axes of launcher movement, *i.e.* train and elevation. It also furnishes a choice of inputting Launcher Position via KSC or encoders. For convenience, all subprograms necessary to perform these operations are embodied in one program. The program controls the launcher in a digital, closed-loop fashion and demonstrates the capability of the digital computer to perform many functions, including command position generation and launcher compensation, using digital-to-analog converters to feed operational amplifiers that provide power to the launcher torque motors.

2.0 APPLICABLE DOCUMENTS

2.1 Performance Specifications

Part 2, Computer Program Performance Specification, is applicable to the content of Part 3.

2.2 Miscellaneous Documents

The following documents are applicable to the content of this specification.

a. Univac PX 2526, 4 vols., *Technical Manual For Type 1218 Digital Data Computer*, May 1964

b. Univac PX 2910, Revision A, *Programmers Reference Manual For UNIVAC 1218 Computer*, December 1963

c. Naval Electronics Laboratory Center TD 57, *ASROC MK 112 Digital Control System, Part 4: Computer Program Operator's Manual* (In press)

d. Naval Electronics Laboratory Center TD 57, *ASROC MK 112 Launcher Digital Control System, Part 5: Computer Program Test Plan* (In press)

e. Naval Electronics Laboratory Center TD 57, *ASROC MK 112 Launcher Digital Control System, Part 6: Computer Program Test Specification* (In press)

3.0 REQUIREMENTS

The ASROC Mk 112 Launcher Digital Control System computer program includes all routines necessary to perform all functions of both train and elevation control. The program must be run as an entity, under the control of an integral Executive, with appropriate routines called on as needed. Since the program was designed for use in a non-operational environment, three tables are generated at the time of program initialization to provide the necessary operational atmosphere for the launcher: a noise table (NTABN), which simulates random noise approximating that which would occur in the operational environment, and the train-and-elevation error curve tables (TETABN and ELETBN, respectively), which provide digital compensation to the launcher during large signal excursions.

The Executive routine begins with the initialization of various memory areas, including the following:

a. Storage of synchronizing interrupt instruction.

b. Calculation of sampling rate.

c. Generation of noise table.

d. Generation of train error curve table.

e. Generation of elevation error curve table.

Upon completing the initialization, the program "S-stops" and waits for the operator to manually set the synchronizing interrupt switches to ON and INTERNAL, which starts the internal real-time clock. The program is restarted, and routine CLOCKN is entered to control the sample period of the program. The real-time clock generates a series of interrupts at the rate of 1024 per second. Each interrupt advances the counter in routine CLOCKN until a predetermined value is reached; for example, a sampling rate of 20 per second requires a count of 50. In addition to its counting function, CLOCKN switches back to the main program after each interrupt until the counter has reached its precalculated value, at which time a jump is made to the portion of the Executive that starts program operation. The first routine, CNTRLN, called at the word CONTRN, interrogates the Command Selector Control Panel. The train and elevation position and feedforward velocity commands are now generated by the appropriate routines. At this point, the program stops performing elevation calculations and works only on train until all train calculations except the partial controller calculations for train are completed. If Computer Skip Key 2 is set, train position is inputted via an encoder. If Skip Key 2 is not set, train position is buffered in through Keyset Central. This position information is used by routine TRERKN to determine the difference between actual train position and commanded train position. At this point the program starts to perform the functions of the train compensating network.

A series of instructions is executed to determine the magnitude of train error and introduce error compensation so that the proper signal will be sent to train. The following series of actions occurs:

a. If train error is greater than 1 degree, an error flag is cleared and routine ECTABN is called to perform an error curve table lookup. The resultant value is saved, controller past history cells are cleared, the feedforward velocity is added to the error-compensated signal, and this command is sent to train by routine TROUTN.

b. If train error is greater than 1/2 degree, but less than 1 degree, a test of the error flag is made. If the error flag is set, routine CONCON is entered to complete the controller calculation, the velocity is added, and this signal is sent to train by routine TROUTN. If the error flag is cleared, the action described under a. above occurs.

c. If the train error is less than 1/2 degree, the error flag is set, routine CONCON is entered to complete the controller calculation, the feedforward velocity is added, and the signal sent to train by routine TROUTN. The preceding sequence of actions insures correct error compensation at all times. Large errors, greater than 1/2 degree, are compensated by the error curve. Once the error becomes less than 1/2 degree, the continuous small-signal controller makes the appropriate compensation until error increases to a value greater than 1 degree, at which time the large error compensation is again used.

This completes all train calculations except for the partial controller calculations. Here, elevation calculations are resumed. The same sequence of actions as described above for train is now performed for elevation: position is inputted by the appropriate routine, error

calculated, the correct compensation provided, feedforward velocity added, and this command outputted to elevation. Now the train-and-elevation small-signal controller is partially calculated for the next pass, and data are sent to the recorder.

It should be noted that after each pass in which the error curve table lookup is performed for train and/or elevation, the respective controller past-history cells ar leared. This action permits the appropriate routines, for completing train and/or elevation controller calculations, to operate, when called, without concern for generation of transient signals that might occur if the cells contained outdated information. In every pass, feedforward velocity is added to the new control orders before they are outputted to the launcher. Routines TROUTN and ELOUTN send data words to D/A converters feeding amplifiers that drive the appropriate launcher torque motors. The calculation of the controller outputs for the next pass takes into account the present and past history of the controller inputs and outputs.

3.1 Functional Allocation/Description

The routines and tables listed in table 3-1 are utilized by the computer program. They are presented in tabular form to facilitate identification of the mode in which each is used.

TABLE 3-1. FUNCTIONAL ALLOCATION/DESCRIPTION
(Continued through page 51)

Task	Description	Designator	Called by	Mode used in
Control all program functions	Executive	EXECTN	Initial-ization	Train and elevation
Generate a simulated random noise table	Noise table generator	NOISEN	EXECTN	Train and elevation
Generate train error curve table	Error curve table generator	ERRORN	ERSUBN	Train
Generate elevation error curve table	Error curve table generator	ERTBGN	EXECTN	Elevation
Control program sample period	Sample time clock	CLOCKN	SAMTMN	Train and elevation
Input command selector panel word	Command selector processing	CNTRLN	CONTRN	Train and elevation
Generate train position orders	Train position commands	TLNPSN	TNPOSN	Train
Generate elevation position orders	Elevation position commands	ELNPSN	EXECTN	Elevation
Form train velocity	Calculate velocity	TRVELN	EXECTN	Train
Form elevation feed-forward velocity	Calculate velocity	ELVELN	EXECTN	Elevation

TABLE 3-1. (Continued)

Task	Description	Designator	Called by	Mode used in
Input train position via encoder	Input train position	TRENIN	LNIN	Train
Input train position through keyset central	Input train position	TKSCIN	EXECTN	Train
Calculate difference between generated command and present position	Calculate train error	TRERRN	EXECTN	Train
Determine controller output based on precalculated error and error curve table	Error curve table lookup	ECTABN	ECTN	Train
Form controller output using precalculated data and new error values	Complete train controller calculations	CONCON	CNCOMN	Train
Output digital orders to train D/A	Output to train	TROUTN	EXECTN	Train
Input elevation position via an encoder	Input elevation position	ELENIN	EXECTN	Elevation
Input elevation position via keyset central	Input elevation position	EKSCIN	EXECTN	Elevation
Calculate difference between generated command and present position	Calculate elevation error	ELERRN	EXECTN	Elevation

TABLE 3-1. (Continued)

Task	Description	Designator	Called by	Mode used in
Determine controller output based on precalculated error and error curve table	Error curve table lookup	ELERLN	ELECTN	Elevation
Form controller output from precalculated data and new error values	Complete elevation controller calculation	COMCON	CMECON	Elevation
Output digital orders to elevation D/A	Output to elevation	ELOUTN	EXECTN	Elevation
Form partial train controller calculations for next pass	Calculate train $D(z)$ for next pass	TRPDZN	EXECTN	Train
Form partial elevation controller calculation for next pass	Calculate elevation $D(z)$ for next pass	ELPDZN	EXECTN	Elevation
Transmit train and elevation driving function and position error to recorder	Data to recorder	DATRDN	DISPLN	Train and elevation
Store generated random noise values	Noise table	NTABN	Provide operating environment	Train and elevation
Store generated train error curve values	Train error curve table	TETABN		Train
Store generated elevation error curve values	Elevation error curve table	ELETBN		Elevation

3.2 Functional Description

Paragraphs 3.2.1 through 3.2.16 describe in detail all functional routines contained within the ASROC digital-control-system computer program. (The tables that provide simulation of launcher operational environment, NTABN, TETABN, and ELETBN, are not included because the routines by which they are generated amply describe them. Since most of the train and elevation routines are identical, only those routines of elevation significantly different will be described separately. The arrangement of these paragraphs follows the order in which the general flow chart (fig. 3-1) is presented).

3.2.1 EXECTN, EXECUTIVE ROUTINE

EXECTN is the entrance to the Executive routine, under which all program functions are controlled. The Executive occupies memory locations 500-625 and performs two functions: (1) initialization (Locations 500 through 510), and (2) execution (Locations 511 through 625). All routines are under Executive control throughout program operation and are called as needed.

3.2.2 NOISEN, NOISE TABLE GENERATOR ROUTINE

This routine (fig. 3-2) is called by the Executive at the time of program initialization to generate a series of 1000 numbers whose distribution characteristics resemble the noise data that might be expected under operational conditions. These numbers are stored in the noise table (NTABN) beginning at Location 5177. The routine is self-contained and executed only at the time of program initialization. Noise values are selected from NTABN and may be added to the launcher commands as a function of operations performed by routines TLNPSN and ELNPSN.

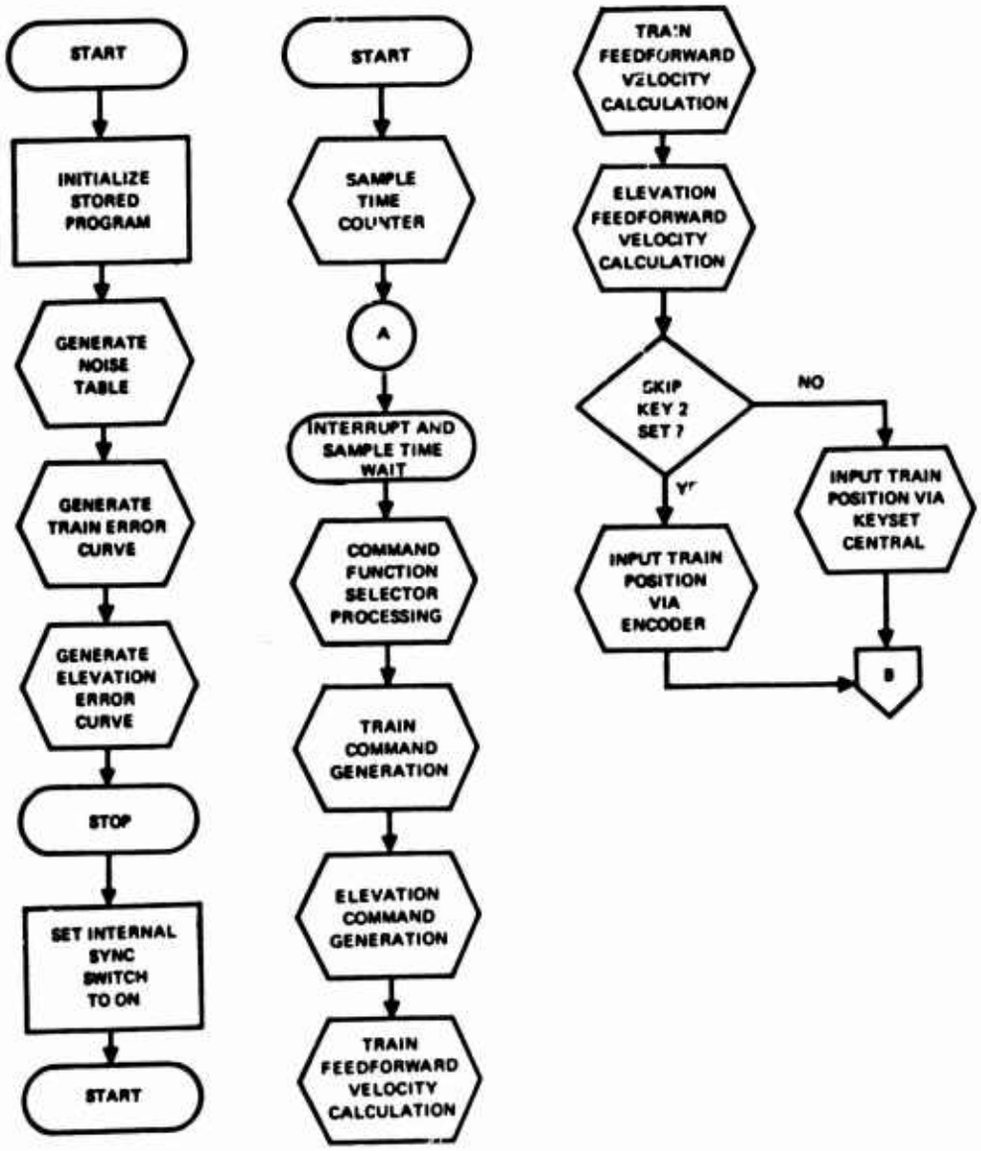

Figure 3-1. Launcher test program, overall flow diagram.

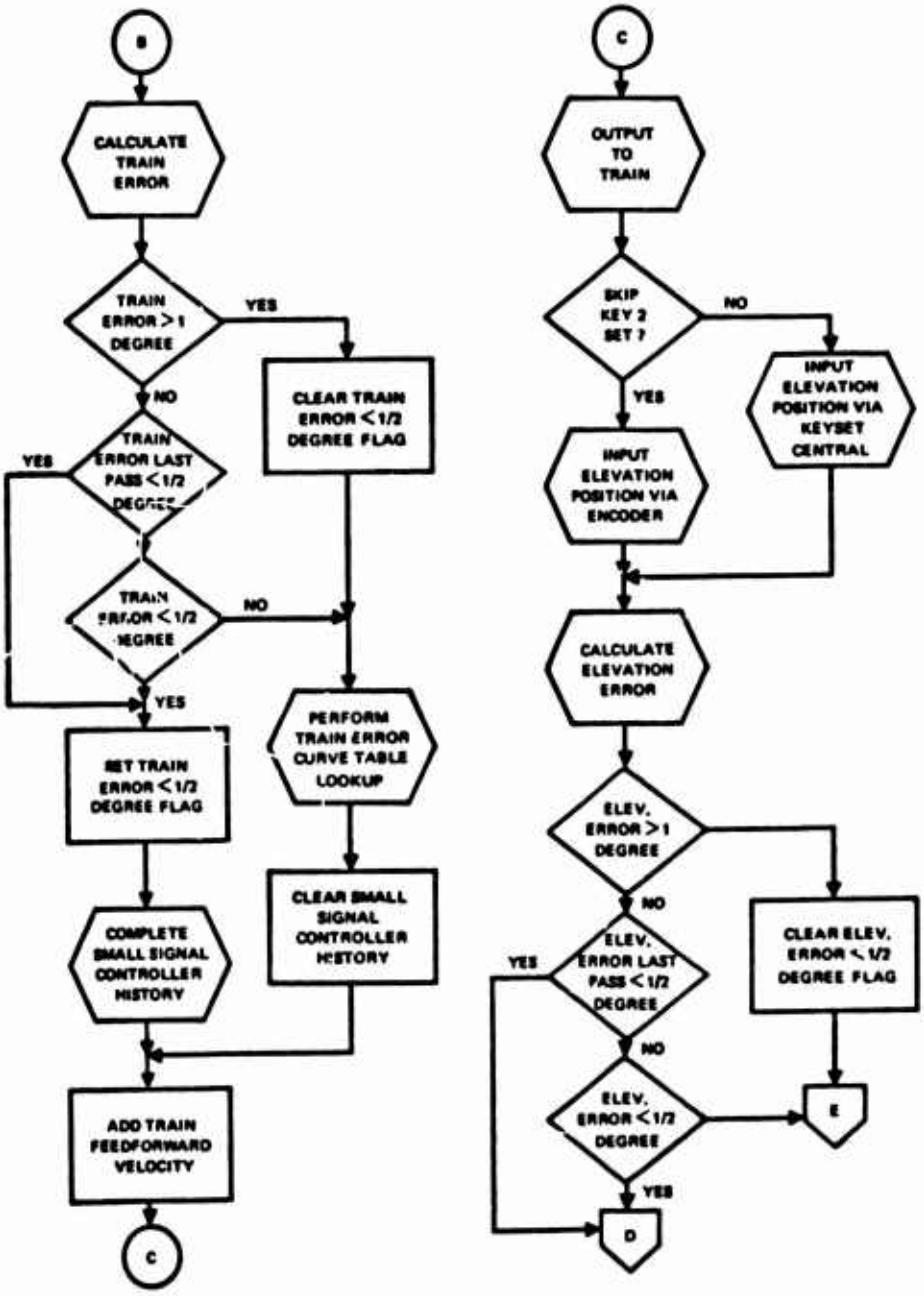

Figure 3-1. (Continued)

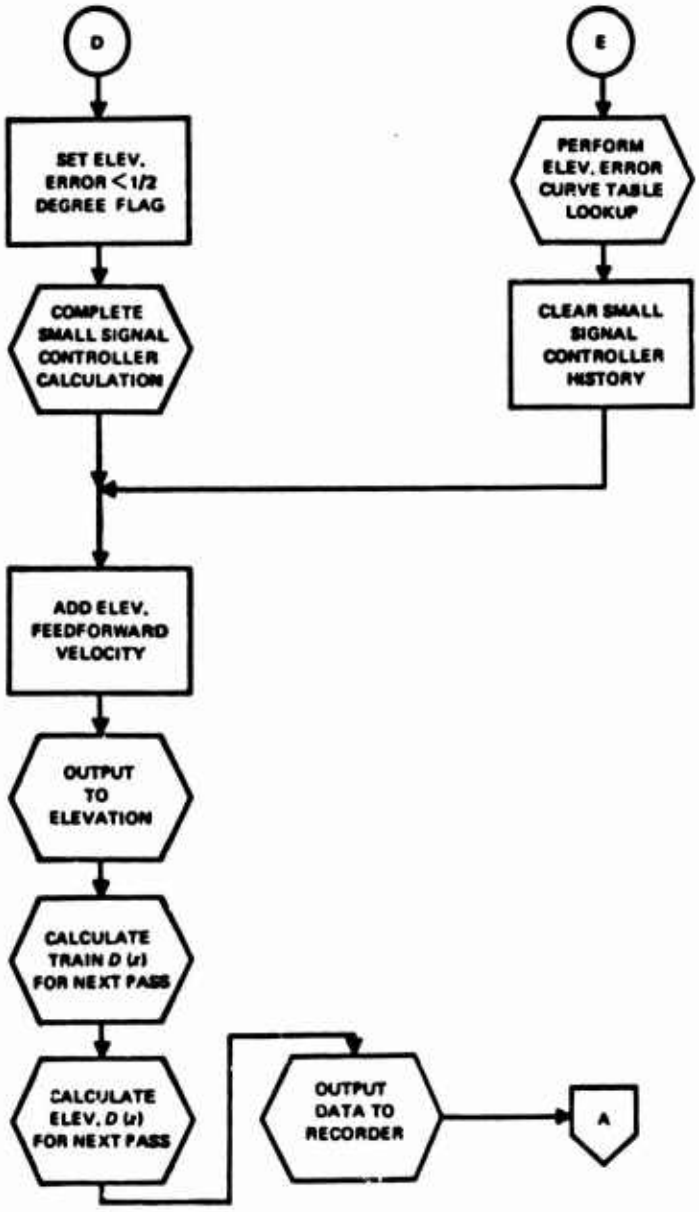

Figure 3-1. (Continued)

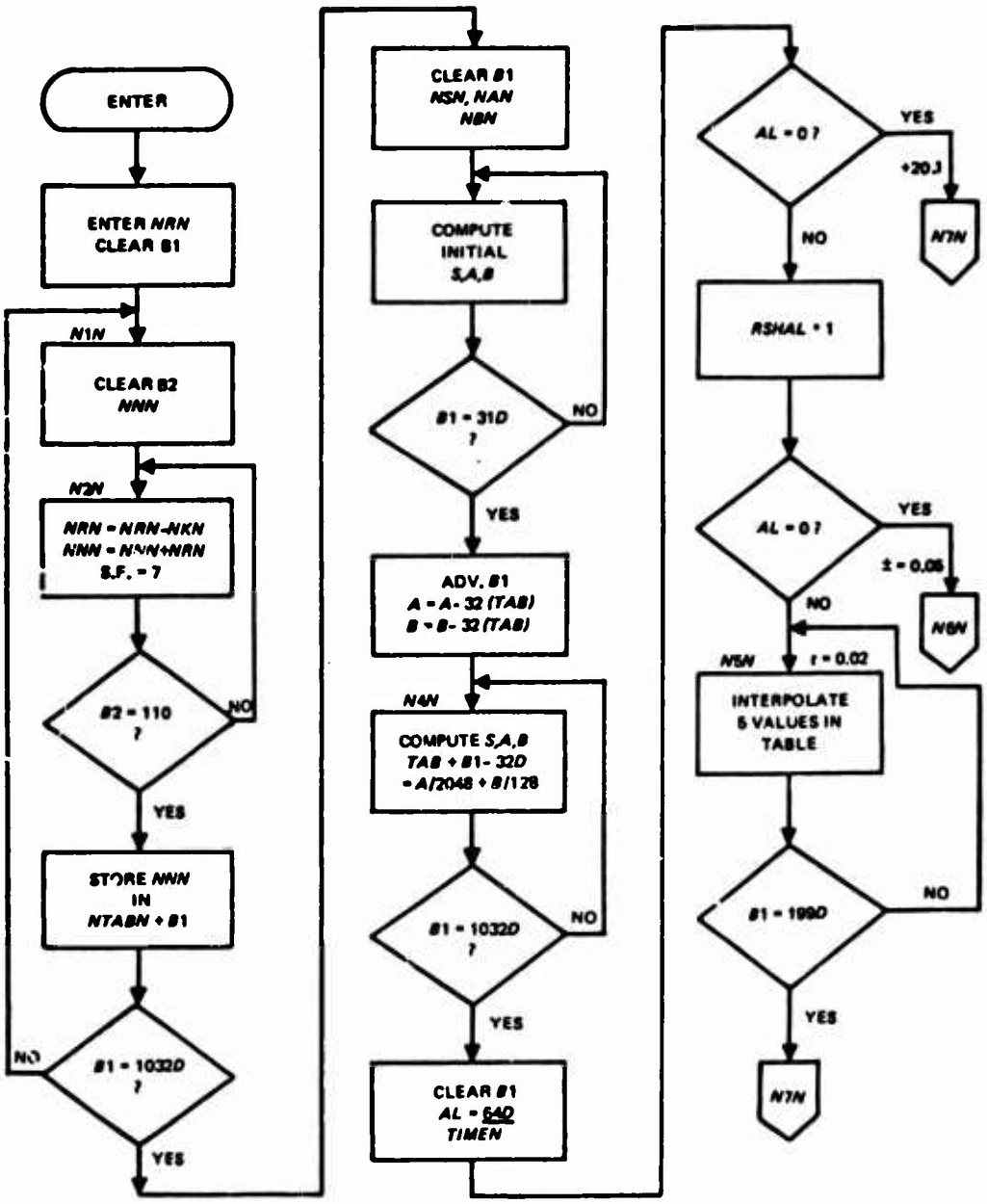

Figure 3-2. Noise table generator routine (NOISEN), flow diagram.

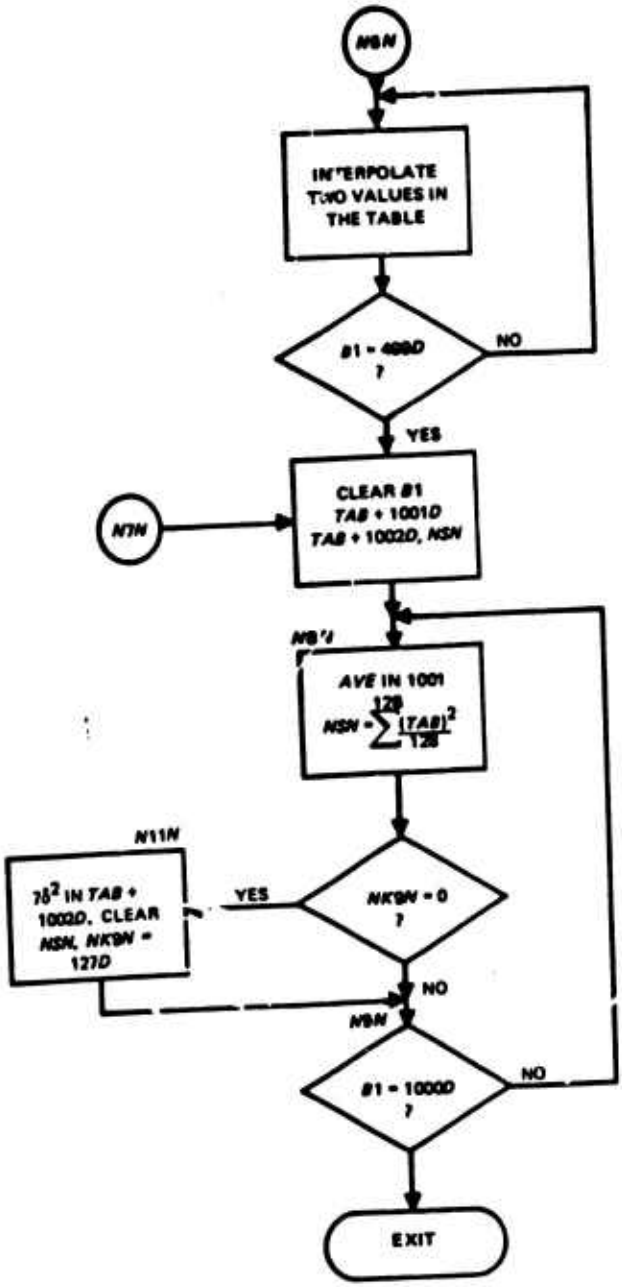

Figure 3-2. (Continued)

3.2.3 ERRORN, ERTBGN, ERROR CURVE TABLE GENERATOR ROUTINES

These routines (fig. 3-3) are called by the Executive at the time of program initialization to generate tables of weighted values stored in the error curve tables (TETABN, ELETBN) at Locations 3203 and 4213, respectively. The tables are used to introduce error compensation during large signal excursions. The magnitude of the stored values is determined by the following equation:

$$Y_n = Y_{n-1} + \frac{A}{Y_{n-1} + B}, \text{ where}$$

$$KN = A = 121727_8$$

$$K1N = B = 1027_8$$

$$K2N = Y_{n-1} \text{ @ } 0.5^\circ = 700_8$$

The same error-curve coefficients are used in both train and elevation. The tables start at 0.4 degree and increment in 0.1-degree steps to 50 degrees. The values are stored with a scaling factor of 2^{10}.

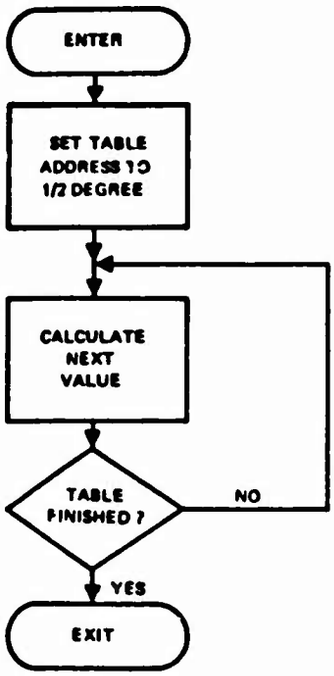

Figure 3-3. Error curve table generator routine (ERRORN for train; ERTBGN for elevation), flow diagram.

3.2.4 CLOCKN, SAMPLE PERIOD CLOCK ROUTINE

This routine (fig. 3-4) enables the real-time clock to regulate the sampling rate of the program that controls the time the Executive starts the program. Entry to CLOCKN occurs 1024 times per second (the interrupt cycle time) via a jump instruction stored in a special interrupt cell (address 16 of the computer). CLOCKN processes each interrupt by decrementing a register and then switching back to the main program. When the register reaches zero, the predetermined sample period has been reached, and the register is reinitialized. Routine CNTRLN is entered, and CLOCKN relinquishes control to the Executive.

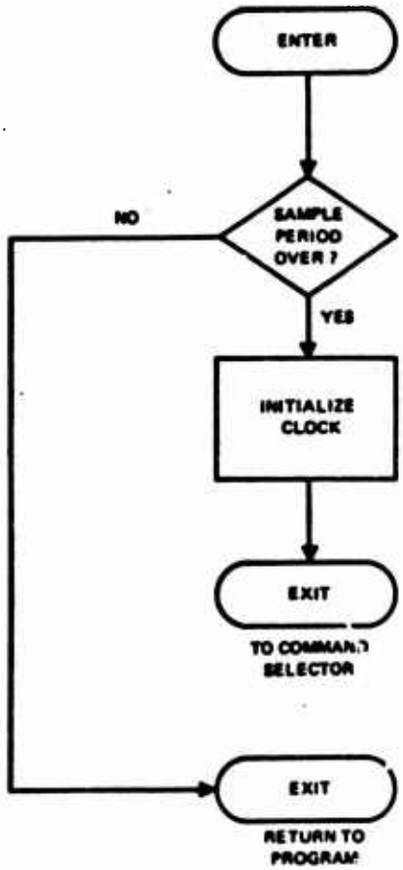

Figure 3-4. Sample period clock routine (CLOCKN), flow diagram.

3.2.5 CNTRLN, COMMAND SELECTOR PROCESSING ROUTINE

This routine (fig. 3-5) receives inputs from a remote Command Selector Control Panel. These inputs select the driving functions to be generated. The word format for selecting these functions is as follows:

2^{17}	2^{16}	2^{15}	2^{14}	2^{12}	2^3	2^2	2^1	2^0
	3			2			1	

a. Train function codes (bits 0-3).

b. Noise set switch (bit 2^{12}).

c. Elevation function codes (bits 14-17)

When a code is selected and an input-data request button is pressed on the command control panel, the computer program buffers in the digital data and separates them into train, elevation, and noise words. The new train and elevation words are compared with the old train and elevation words, respectively. A difference in the words signifies a change in the driving functions; the program then initializes routines TLNPSN and ELNPSN by clearing the respective driving function storage cells. The noise word is saved for use by routines TLNPSN and ELNPSN to determine if noise is to be added to the driving function. Exit from this routine returns control to the Executive.

3.2.6 TLNPSN, ELNPSN, LAUNCHER POSITION COMMAND ROUTINES

TLNPSN (fig. 3-6) and ELNPSN (fig. 3-7) generate the selected train and elevation driving functions and, if specified, add the random noise component to these driving functions. TLNPSN starts by storing the existing driving function. The noise bit is removed, and the new driving function select code is examined for legality. If the new code is illegal, a zero position command is generated. If the code is legal, TLNPSN generates appropriate driving functions by utilizing steps, ramps, and sine waves (fig. 3-6). After function generation, noise is added, if required, by calling in the proper values from NTABN. Upon

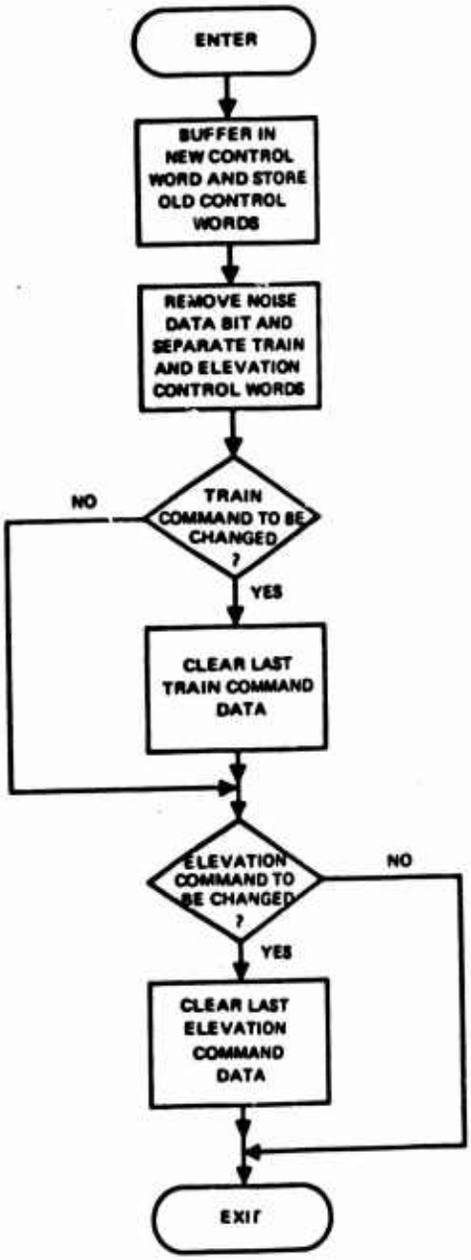

Figure 3-5. Command Function Selector processing routine (CNTRLN), flow diagram.

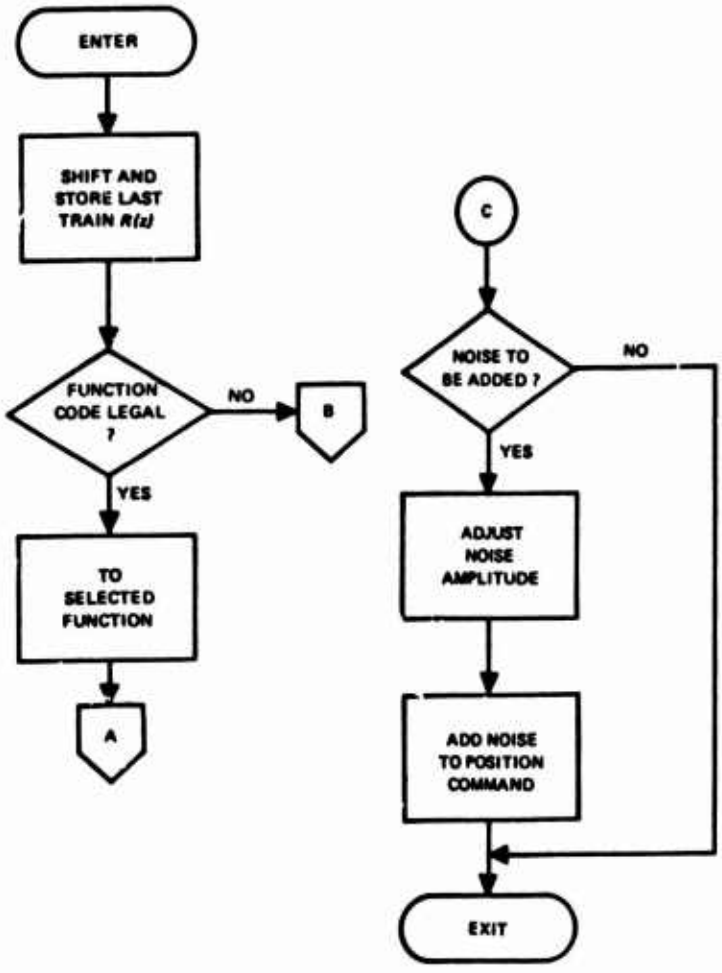

Figure 3-6. Train position commands routine (TLNPSN), flow diagram.

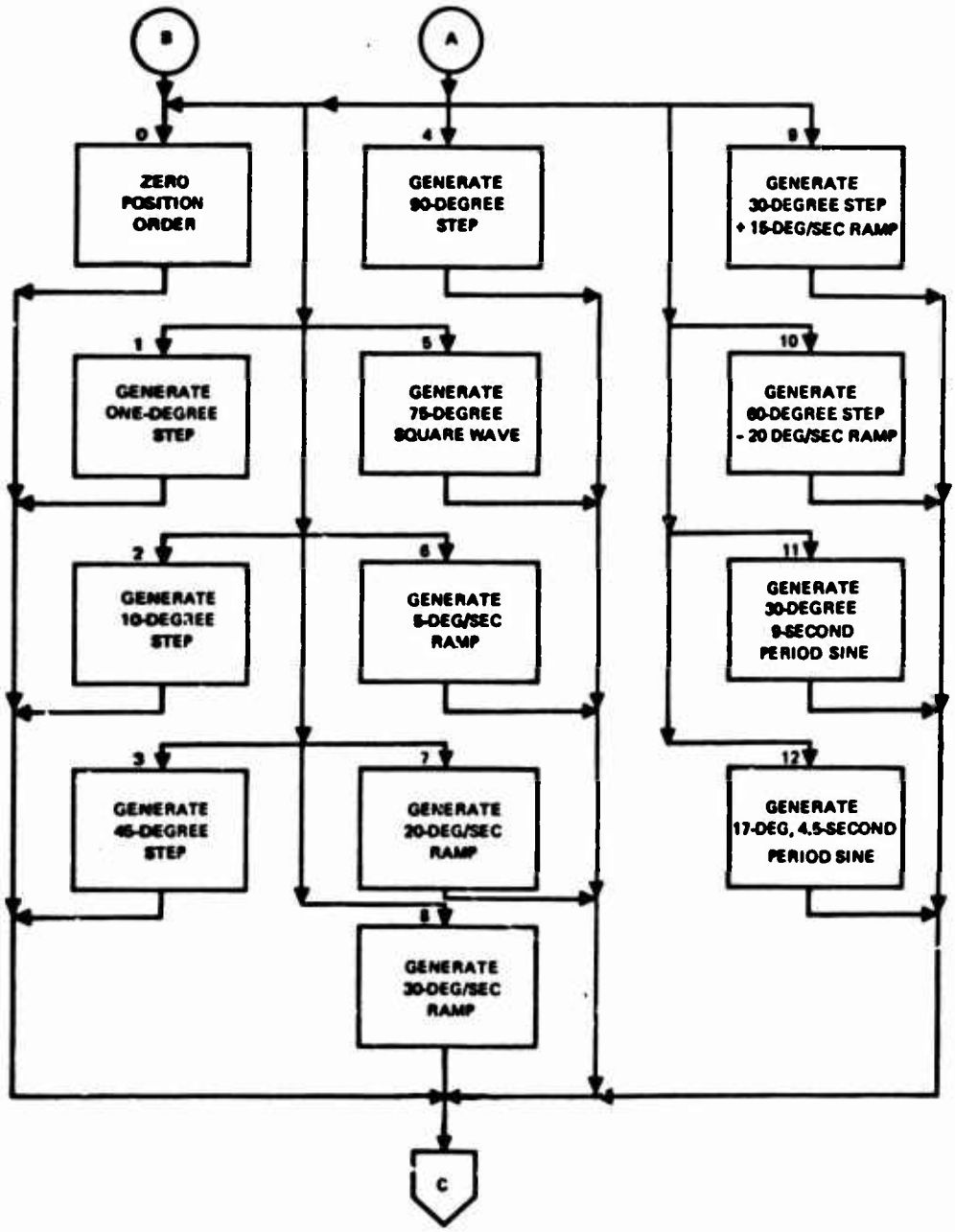

Figure 3-6. (Continued)

completion of TLNPSN, ELNPSN, is entered to generate elevation position commands. The only difference between TLNPSN and ELNPSN is that TLNPSN can generate one more ramp function than ELNPSN, and ELNPSN offsets the sine waves from zero since the elevation mode only depresses about 1 or 2 degrees. Upon completion, ELNPSN exits to the executive.

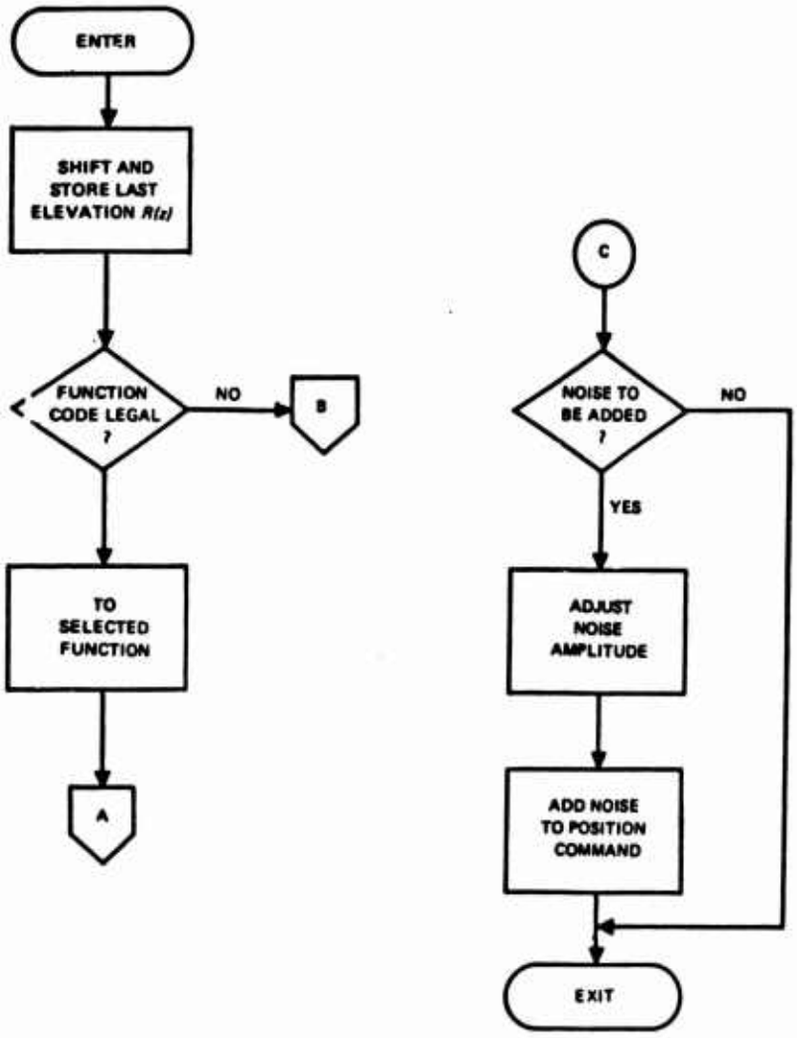

Figure 3-7. Elevation position commands routine (ELNPSN), flow diagram.

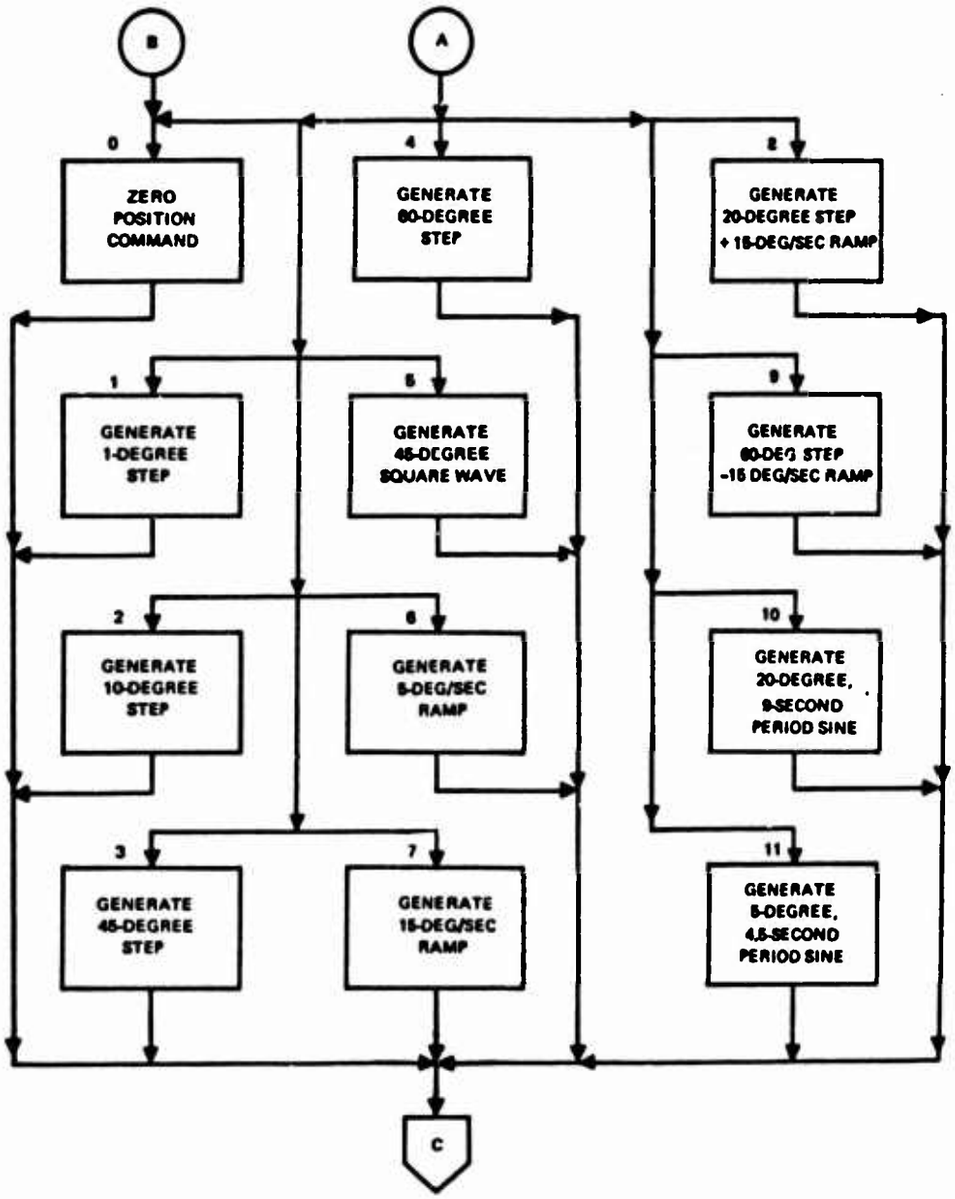

Figure 3-7. (Continued)

3.2.7 TRVELN, ELVELN, CALCULATE VELOCITY ORDER ROUTINES

These routines (fig. 3-8) are used to calculate the feedforward velocity components of the digital signals outputted to train and elevation. The velocity order is generated by solving the following equation:

$V_n = (R_n - R_{n-1})F \times 0.109375$ where

R_n represents the present commanded position,

R_{n-1} represents the past commanded position,

F is the sampling rate, and

0.109375 is a constant that is approximately the reciprocal of the train plant gain.

The calculated velocity is filtered through use of the following equation:

$$\overline{V}_n = 0.25\,(V_n - \overline{V}_{n-1}) + \overline{V}_{n-1}$$

TRVELN first calculates V_n, then filters it, and finally multiples $\overline{V}_n$ by the feedforward gain factor. The routine now checks the command function select code to determine what kind of position order has been commanded. If a step or square wave has been ordered, TRVELN will zero in the velocity before returning to the Executive. If a command other than a step or square wave has been ordered, TRVELN returns to the Executive normally. This check is made and velocity zeroed to eliminate large transients that might occur because of step inputs. After TRVELN is executed, the Executive enters ELVELN to calculate the feedforward velocity to be used in elevation. The only difference between ELVELN and TRVELN is the constant used; ELVELN uses a constant of 0.144531, which is approximately the reciprocal of the elevation plant gain.

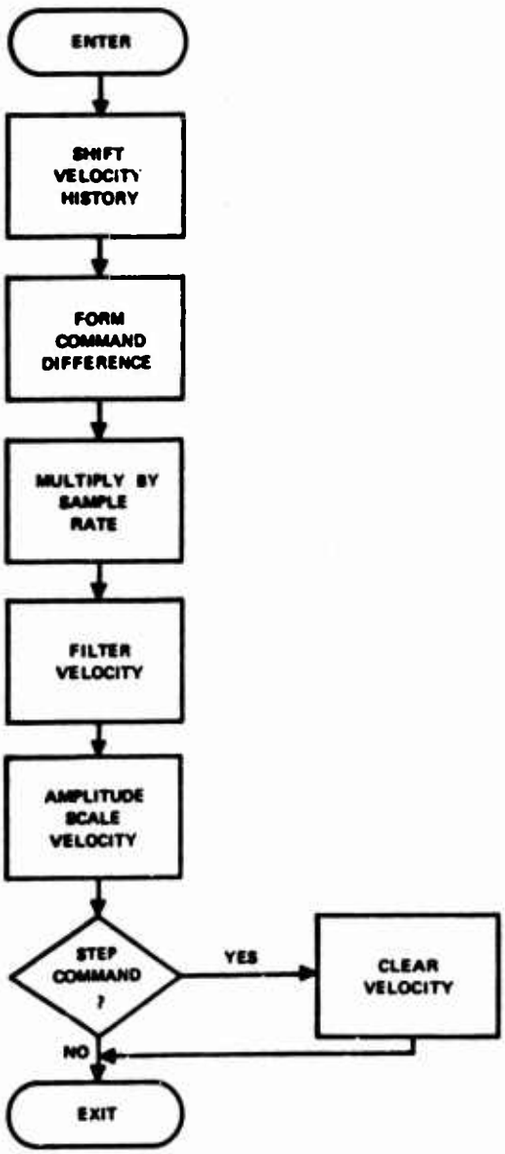

Figure 3-8. Calculate feedforward velocity command routine (TRVELN, train; ELVELN, elevation), flow diagram.

3.2.8 TRENIN, ELENIN, INPUT LAUNCHER POSITION VIA ENCODER ROUTINES

These routines (fig. 3-9) input the Launcher Position via DATEX, 15-bit, shaft-to-digital encoders on Computer Channel 6. Each routine (TRENIN and ELENIN) first selects the encoder designated for train and elevation through use of the external function command on Channel 6 and the appropriate external function code. Position is then buffered in, scaled, and stored for later use in the previously specified storage location. Control is now returned to the Executive.

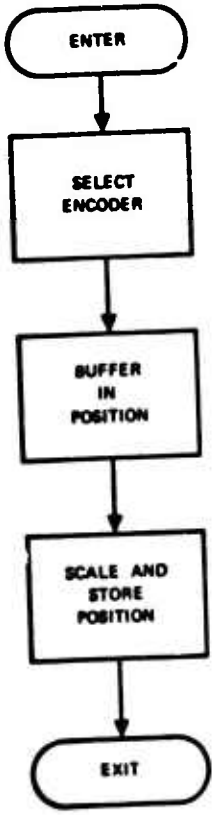

Figure 3-9. Input position via encoder routine (TRENIN, train; ELENIN, elevation), flow diagram.

3.2.9 TKSCIN, TRAIN POSITION IN THROUGH KEYSET CENTRAL ROUTINE

This routine (fig. 3-10) inputs train position through KSC in a dual-channel operation using Computer Channels 4 and 5. TKSCIN first stores an interrupt instruction in Cell 112, then requests control of KSC and waits for an interrupt from KSC. The KSC interrupts are coded to signal the completion of operation or allow for error examination. Code "1" signals the successful completion of the request control operation; Code "2" signals the successful completion of an input operation, and any other code signals, that an error in the operation has occurred. Each time a KSC interrupt occurs, the instruction in Cell 112 jumps to the place in routine TKSCIN where the interrupt lookout is released and the interrupt code is analyzed. If the interrupt code is "1," train position is buffered in a wait occurs, and a return is made to release the interrupt lockout and analyze the code. On this pass the interrupt code will not be "1" (since the position has been buffered in), but will be a "2," so the position is scaled and stored, and exit is made to the Executive. If the interrupt code is not "1" or "2," the program is stopped to permit examination of the KSC error.

3.2.10 EKSCIN, ELEVATION POSITION IN THROUGH KSC ROUTINE

This routine (fig. 3-11) inputs elevation position through KSC. Essentially the program is the same as TKSCIN except that it does not request control from KSC. This was granted during the execution of TKSCIN and therefore it does not check for interrupt code "1." After the interrupt instruction is stored in Cell 112, the position is buffered in, the interrupt lockout released, the interrupt code is analyzed, and the position is scaled and stored if the buffered p[illegible] was completed properly. Exit is then made to the Executive.

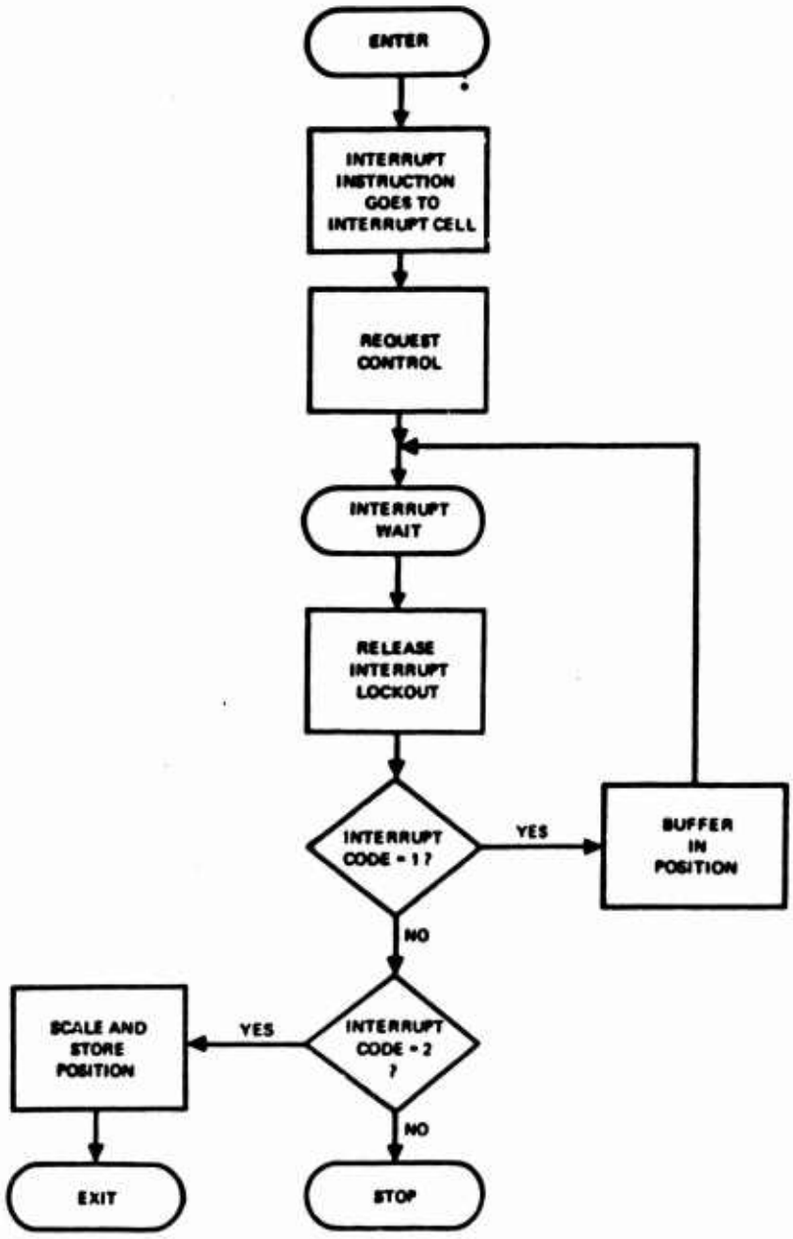

Figure 3-10. Input train position via Keyset Central routine (TKSCIN), flow diagram.

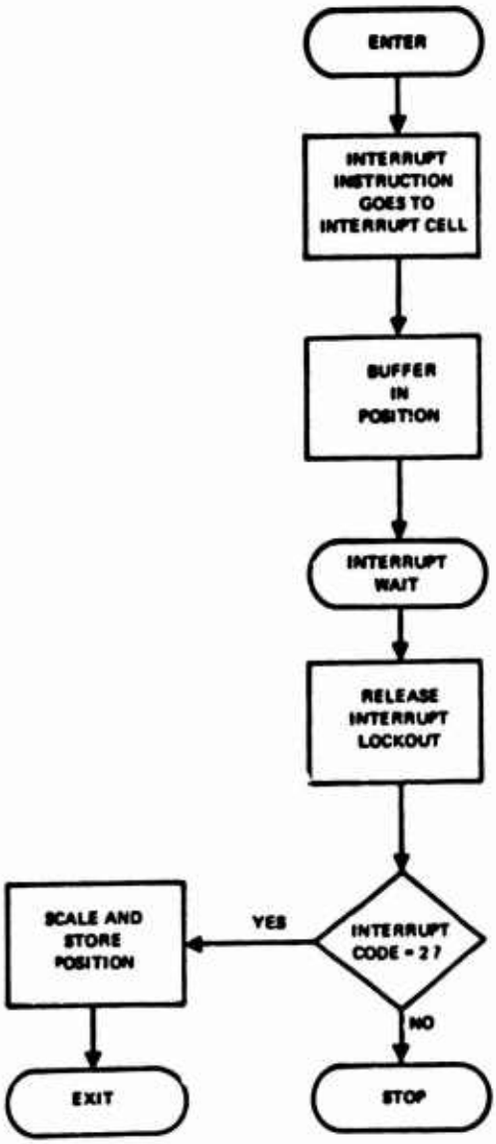

Figure 3-11. Input elevation position via Keyset Central routine (EKSCIN), flow diagram.

3.2.11 TRERRN, ELERRN, CALCULATE LOOP ERROR ROUTINES

These routines (fig. 3-12) are entered to calculate the difference between the present Launcher Position and the commanded Launcher Position. The Launcher Position is subtracted from the driving function and stored for later use. A return is made to the Executive after error calculation.

3.2.12 ECTABN, ELERLN, ERROR CURVE TABLE LOOKUP ROUTINES

These routines (fig. 3-13) make use of the error curve tables TETABN and ELETBN, which were created at the time of program initialization. If the Executive determines that the initial loop error is greater than 1 degree, these routines are called to make the table lookup and appropriate error compensation. Exit is then made to the Executive. As long as loop error remains less than 1/2 degree, the program bypasses the error-curve lookup routines and goes to routines CONCON and COMCON, respectively. Error flags can be set such that routines ECTABN and ELERLN are called to make the error compensation when loop error exceeds 1/2 degree at any time during program operation.

Figure 3-12. Calculate error routine (TRERRN, train; ELERRN, elevation), flow diagram.

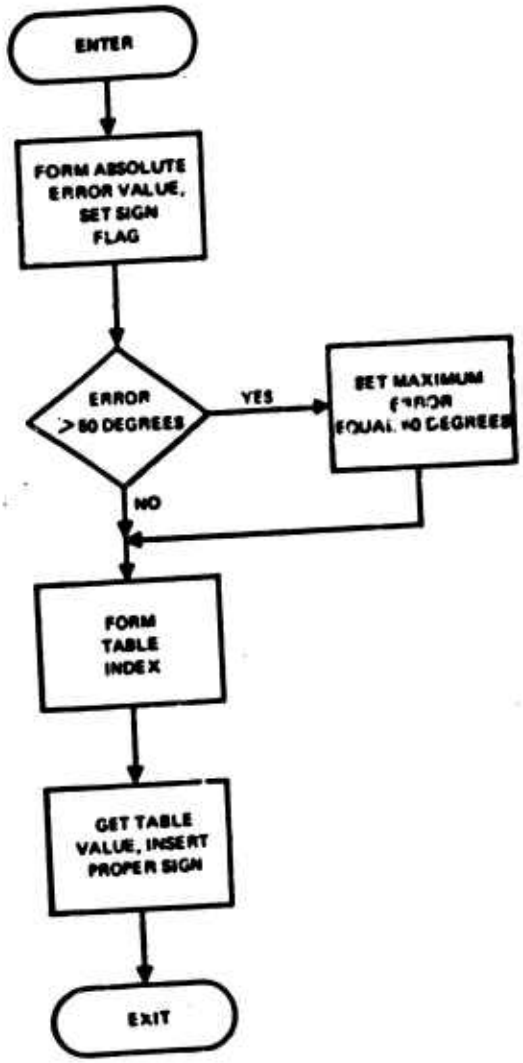

Figure 3-13. Error curve table lookup routine (ECTABN, train; ELERLN, elevation), flow diagram.

3.2.13 CONCON, COMCON, COMPLETE CONTROLLER CALCULATION ROUTINES

When the Executive determines that train and elevation loop error is less than 1/2 degree, these routines (fig. 3-14) are entered to complete calculations of the control order (less feedforward velocity). Routines CONCON and COMCON are used only when conditions are such that the error-curve table lookup routines are not called. CONCON and COMCON scale the error, store position error history, multiply by the a_0 coefficient, add it to previously calculated position data from TRPDZN and ELPDZN, store the new controller output, and exit to the Executive.

3.2.14 TROUTN, ELOUTN, OUTPUT TO LAUNCHER ROUTINES

These routines (fig. 3-15) output the commands to train and elevation. The routines scale all inputs to system scale (40 deg/sec = 8 V); check for an overflow and make corrections as required; select the correct D/A converter; buffer the commands to the selected D/A; and exit to the Executive.

3.2.15 TRPDZN, ELPDZN, CALCULATE PARTIAL CONTROL FUNCTION FOR NEXT PASS ROUTINES

These routines (fig. 3-16) use stored train and elevation history and coefficients to form the partial control function calculation for the next pass. The outputs of these routines form part of the inputs to CONCON and COMCON and are used by CONCON and COMCON in their calculation of the controller's outputs. Upon completion, these routines return to the Executive.

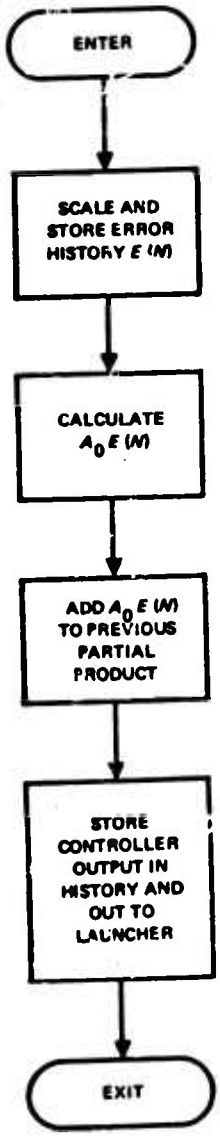

Figure 3-14. Complete controller calculations routine (CONCON, train; COMCON, elevation), flow diagram.

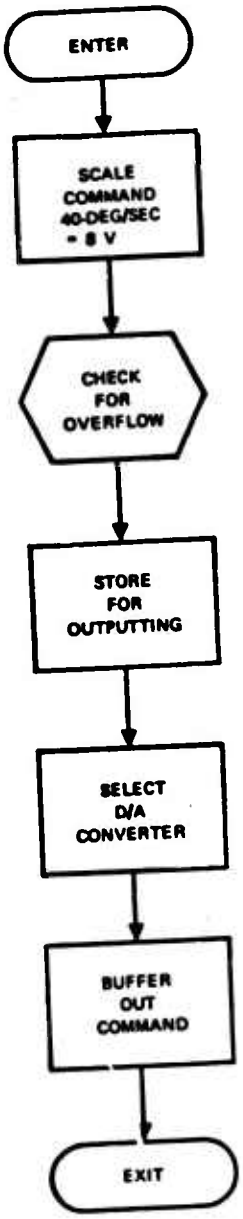

Figure 3-15. Output to launcher routine (TROUTN, train; ELOUTN, elevation), flow diagram.

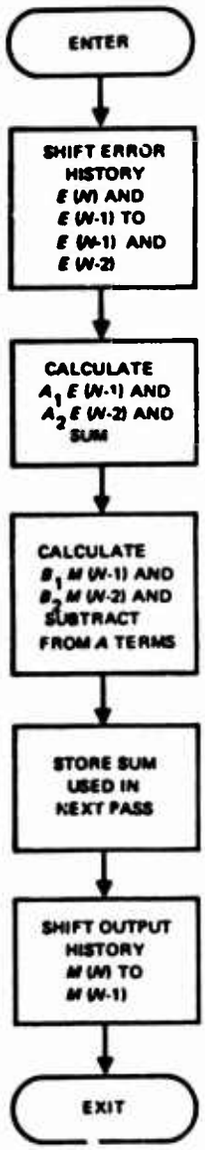

Figure 3-16. Calculate partial controller for next pass routine (TRPDZN, train; ELPDZN, elevation), flow diagram.

3.2.16 DATRDN, DATA TO BRUSH RECORDER ROUTINE

DATRDN (fig. 3-17) is used to output data to the Brush Recorder. The data are buffered to the recorder via D/A converters 1, 4, 5, and 6. Four parameters are recorded: train and elevation driving function (TR(z) and ER(z)) and train and elevation position error (TE(z) and EE(z)). The driving functions are scaled so that 10 degrees equal 1 volt out of the D/A converter, and the errors are scaled so that 1 degree equals 1 volt. The sequence is identical for each of the four parameters, as follows: the value is scaled as above and checked for overflow, making corrections as required; the proper D/A converter selected, and the scaled value buffered out to the recorder. At the end of this routine, return is made to the Executive, which waits for the next interrupt and sample time to reinitiate the sequence of routines.

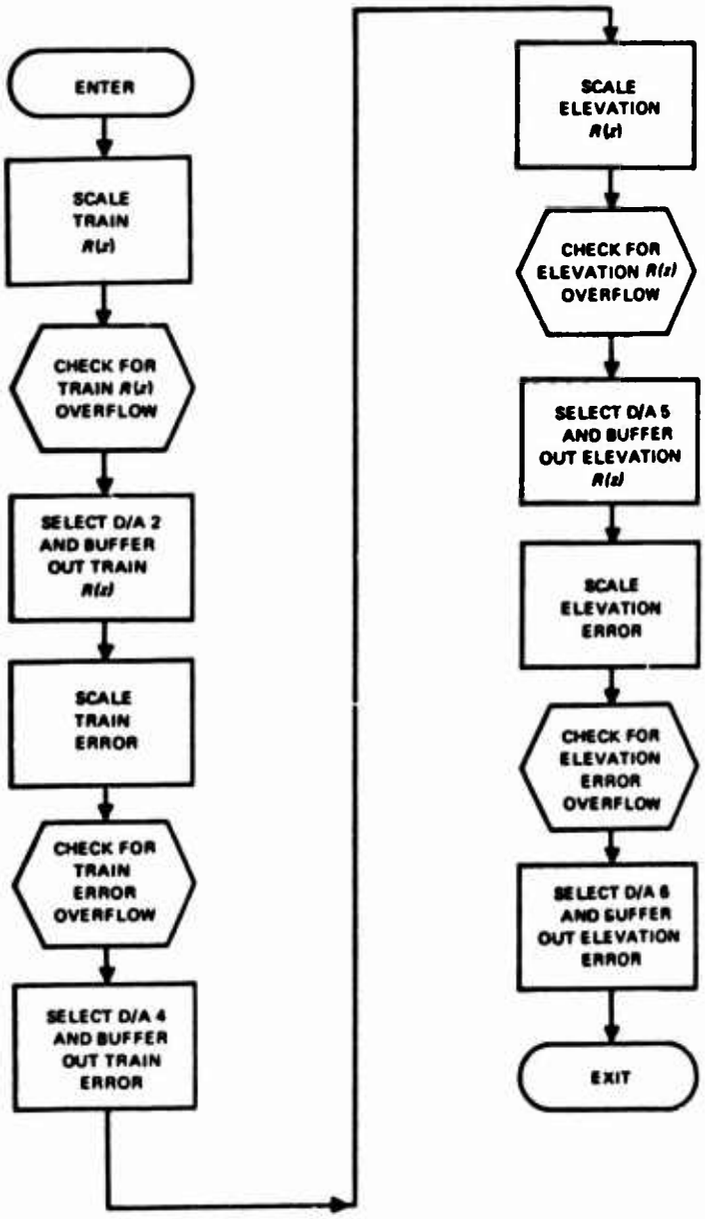

Figure 3-17. Data to Brush Recorder routine (DATRDN), flow diagram.

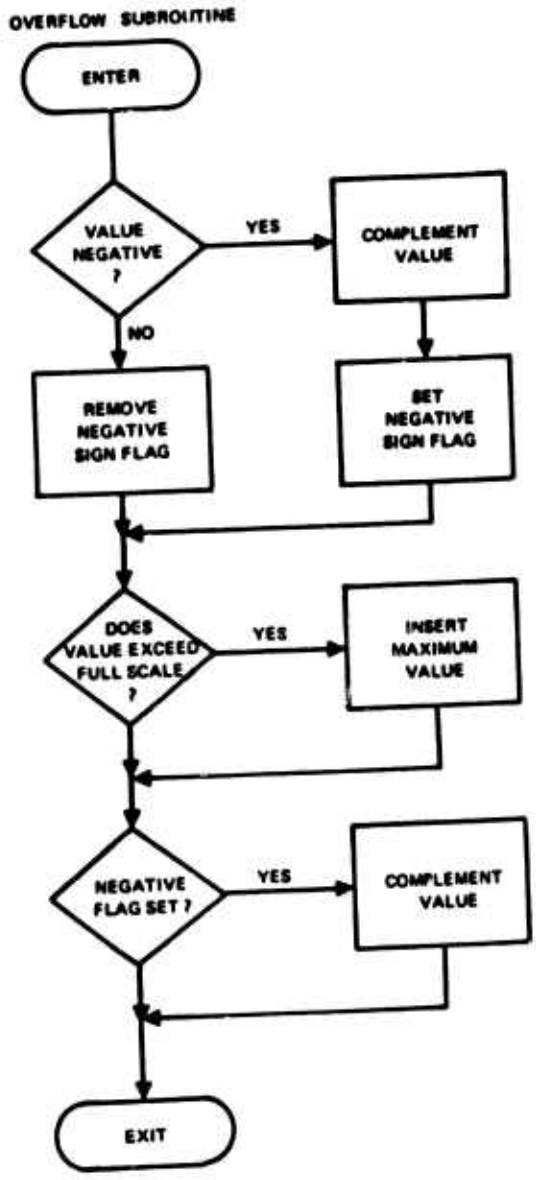

Figure 3-17. (Continued)

3.3 Storage Allocation

This program occupies memory locations 500 through 3204 octal, a total of 1348 (decimal) cells, allocated as shown in table 3-2 (see par. 5.3, Part 3, Program Listing). Table 3-2 also lists the storage locations for the three tables.

TABLE 3-2. STORAGE ALLOCATION

LOCATION	CONTENT
500-615	EXECTN
615-625	EXECTN data cells
626-1065	NOISEN
1066-1107	NOISEN data cells
1110-1132	ERRORN
1133-1141	ERRORN data cells
1142-1164	ERTBGN
1165-1170	ERTBGN data cells
1171-1177	CLOCKN
1200-1201	CLOCKN data cells
1201-1240	CNTRLN
1241-1247	CNTRLN data cells
1250-1643	TLNPSN
1644-1700	TLNPSN data cells
1701-2234	ELNPSN
2235-2270	ELNPSN data cells
2271-2312	TRVELN
2313-2317	TRVELN data cells
2320-2342	ELVELN
2343-2347	ELVELN data cells
2350-2367	TRENIN
2370-2372	TRENIN data cells
2373-2432	TKSCIN
2433-2444	TKSCIN data cells

TABLE 3-2. (Continued)

LOCATION	CONTENT
2445-2452	TRERRN
2453-2455	TRERRN data cells
2456-2507	ECTABN
2510-2513	ECTABN data cells
2514-2527	CGNCON
2530-2531	CONCON data cells
2532-2551	TROUTN
2552-2554	TROUTN data cells
2555-2574	ELENIN
2575-2600	ELENIN data cells
2601-2631	EKSCIN
2632-2634	EKSCIN data cells
2635-2642	ELERRN
2643-2644	ELERRN data cells
2645-2676	ELERLN
2677-2701	ELERLN data cells
2702-2715	COMCON
2716-2716	COMCON data cells
2717-2736	ELOUTN
2737-2740	ELOUTN data cells
2741-2774	TRPDZN
2775-3007	TRPDZN data cells
3010-3043	ELPDZN
3044-3056	ELPDZN data cells
3057-3150	DATRDN
3151-3163	DATRDN data cells
3164-3202	ATSTN
3202-3204	ATSTN data cells
3205-4214	TETABN
4215-5200	ELETBN
5201-7210	NTABN

3.4 Computer Program Functional Flow Diagrams

Figures 3-1 through 3-17 present a complete set of flow diagrams for the computer program. The diagrams are arranged in the same order as the discussions in paragraph 3.2. Only those elevation programs significantly different from train programs have their flow diagrams listed separately.

3.5 Control Functions

The program is executed under the control of an integral Executive routine. After program initialization, each routine is called in sequence by the Executive until the complete cycle has been run, then returns to the start to wait for a new order. Since this is not an operational program, neither start-over nor recovery functions were deemed necessary.

3.5.1 INPUT MODE SELECTION

The selection of input mode requires setting of a computer key. No reconfiguration of hardware is required nor it is necessary to stop and restart the computer program. Reselection can be made without noticeable interruption or interference with program operation.

3.6 Data Base Definitions

Routine, table, and item descriptions used in this program are, insofar as possible, assigned mnemonic names, which identify their functions in an abbreviated fashion. The suffix letter "N" attached to each description or label is the program identification letter assigned to the Naval Electronics Laboratory Center. The program, as written, is subject to the constraints imposed by the use of the Trim II language (field-data code) and conforms in all respects to Trim II requirements. Table 3-3 shows all program items

in alphabetical order. Each item is identified by the routine in which it is used and is further classified by a code Letter, "T" for static items (those that do not change during program operation) or "D" for dynamic items (those that may change during program operation). Items that must be preset prior to program operation are identified by an asterisk (•) in the INIT. COND. column. As a further cross index to the printed output listing of table 3-5, Part 3, storage location is shown in the last column of the table.

TABLE 3-3. ALPHABETICAL ITEM INDEX

ITEM	ROUTINE	CLASS	INIT. CONT.	LOC.	ITEM	ROUTINE	CLASS	INIT. CONT.	LOC.
ACOEFN	TRPDZN	T	•	2777	CMECON	EXECTN	T		605
ADDN	TLNPSN	T		1620	CMELCN	CNTRLN	T		1232
ADDVLN	EXECTN	T		552	CNCOMN	EXECTN	T		551
AFLGN	ATSTN	D		3206	CNTRLN	ROUTINE	T		1202
AIREFN	DATRDN	T		3163	COFTN	TRENIN	D		2373
AIRN	TRERRN	D		2455	COMCON	ROUTINE	T		2704
AIR1N	TRERRN	D		2454	CONCON	ROUTINE	T		2516
AKON	ATSTN	T		3205	CONTRN	EXECTN	T		515
AK1N	DATRDN	T		3153	CONWDN	CNTRLN	D		1247
AK2N	DATRDN	T		3154	CYCLEN	TLNPSN	T		1353
ALOOPN	ERRORN	T		1117	CYCL1N	TLNPSN	T		1416
AOUTN	DATRDN	D		3155	CYCL2N	TLNPSN	T		1456
ATSTN	ROUTINE	T		3166	CYCL3N	TLNPSN	T		1513
AZERON	ERRORN	T		1140	CYCL4N	TLNPSN	T		1537
BCOEFN	TRPDZN	T	•	3002	CYCL5N	TLNPSN	T		1557
BEGON	TRENIN	T		2374	CYCL6N	TLNPSN	T		1603
BOUTN	TROUTN	D		2554	DATRDN	ROUTINE	T		3061
BUFERN	TKSCIN	T		2414	DEDGSN	ELNPSN	T		1732
CENDN	CNTRLN	T		1240	DEGSPN	TLNPSN	T		1302
CLERPN	ELNPSN	T		2137	DELTAN	TLNPSN	D		1652
CLOCKN	ROUTINE	T		1171	DELTEN	ELNPSN	D		2245
CLRPN	TLNPSN	T		1526	DISPLN	EXECTN	T		0614

Items marked by an asterisk must be preset prior to program operation.

TABLE 3-3. (Continued)

ITEM	ROUTINE	CLASS	INIT. CONT.	LOC.	ITEM	ROUTINE	CLASS	INIT. CONT.	LOC.
DWNRN	TLNPSN	T		1375	EEDIN	EKSCIN	T		2623
DWNR1N	TLNPSN	T		1440	EEH15N	ELPDZN	D		3053
DWNR2N	TLNPSN	T		1500	EFDGRN	ELNPSN	T		1770
D15N	TLNPSN	T		1656	EFDGSN	ELNPSN	T		1735
D20N	TLNPSN	T		1657	EFINSN	ELNPSN	T		2231
D30N	TLNPSN	T		1660	EFLAGN	ELVELN	D		2347
D45N	TLNPSN	T		1661	EFRDSN	ELNPSN	T		1740
D60N	TLNPSN	T		1662	EGNRPN	ELNPSN	T		2006
D75N	TLNPSN	T		1663	EHISTN	ELPDZN	D		3056
D90N	TLNPSN	T		1664	EKN	ERTBGN	T		116[illegible]
D160N	TLNPSN	T		1665	EKONEN	ELNPSN	T	•	2246
EACOFN	ELPDZN	T	•	3046	EKSCIN	ROUTINE	T		2603
EADDN	ELNPSN	T		2212	EK1N	ERTBGN	T		1166
EADVLN	EXECTN	T		606	EK2N	ERTBGN	T		1167
EAIRN	ELERRN	D		2645	ELCFGN	EXECTN	D		624
EAIR1N	ELERRN	D		2646	ELCTN	ERTBGN	D		1170
EAREFN	DATRDN	T		3165	ELECTN	EXECTN	T		571
EBCOFN	ELPDZN	T	•	3051	ELEFIN	ELENIN	T		2577
EBOUTN	ELOUTN	D		2741	ELEFN	ELOUTN	T		2742
ECNWDN	CNTRLN	D		1241	ELENIN	ROUTINE	T		2557
ECOFTN	ELENIN	D		2602	ELERLN	ROUTINE	T		2647
ECTABN	ROUTINE	T		2460	ELERRN	ROUTINE	T		2637
ECTN	EXECTN	T		535	ELESIN	EXECTN	T		603
ECYCLN	ELNPSN	T		2003	ELETBN	TABLE	T	•	4175
ECYC1N	ELNPSN	T		2045	ELNPSN	ROUTINE	T		1701
ECYC2N	ELNPSN	T		2103	ELOOPN	ERTBGN	T		1151
ECYC3N	ELNPSN	T		2124	ELOUTN	ROUTINE	T		2721
ECYC5N	ELNPSN	T		2147	ELPDZN	ROUTINE	T		3012
ECYC6N	ELNPSN	T		2174	ELPOSN	ELENIN	D		600
EDWNRN	ELNPSN	T		2025	ELVELN	ROUTINE	T		2322
EDWR1N	ELNPSN	T		2070	EMOFZN	ELERLN	D		2703

TABLE 3-3. (Continued)

ITEM	ROUTINE	CLASS	INIT. CONT.	LOC.	ITEM	ROUTINE	CLASS	INIT. CONT.	LOC.
EMZVLN	EXECTN	D		625	ESIZEN	ELVELN	T		2350
ENCOUN	ELNPSN	D		2251	ESPRPN	ELNPSN	T		2074
ENDIN	TKSCIN	T		2424	ESQWCN	ELNPSN	D		2242
ENOSTN	ELNPSN	T		2226	ESQWIN	ELNPSN	D		2240
ENSVLN	ELNPSN	T		2222	ESQWN	ELNPSN	D		1745
ENTVAN	TLNPSN	T		1326	ESTLIN	COMCON	T		2720
ENTVEN	ELNPSN	T		1756	ESTPUN	ELNPSN	T		1753
ENVALN	ELNPSN	D		2225	ESTRN	ELNPSN	T		1765
ENWDCN	EKSCIN	T		2635	ESWJPN	EXECTN	T		576
EOSWN	ELNPSN	T		1713	ETESTN	ELERLN	D		2701
EPSZRN	ELNPSN	T		1730	ETIMEN	ELVELN	T		2331
ERAMPN	ELNPSN	T		2031	ETWRPN	ELNPSN	T		2033
EREFN	DATRDN	T		3164	FVELCN	ELVELN	D		2351
ERENTN	COMCON	T		2616	EVELN	ELNPSN	T		2017
EROFTN	ELNPSN	D		2236	EVTMPN	ELVELN	T		2345
ERPISN	EKSCIN	T		2634	EXECTN	ROUTINE	T		500
ERRORN	ROUTINE	T		1110	EXEN	ELNPSN	T		1764
ERSUBN	EXECTN	T		507	EXN	TLNPSN	T		1334
ERTBGN	ROUTINE	T		1142	FDGSPN	TLNPSN	T		1305
ESAWN	ELNPSN	T		2115	FDSRPN	TLNPSN	T		1340
ESDGSN	ELNPSN	T		1743	FINSHN	TLNPSN	T		1637
ESETN	ELNPSN	T		2232	FRDSPN	TLNPSN	T		1310
ESINEN	ELNPSN	T		2141	GENRPN	TLNPSN	T		1356
ESINZN	ELNPSN	T		2255	GENR1N	ELNPSN	T		2051
ESIN1N	ELNPSN	D		2247	GENR2N	ELNPSN	T		2106
ESIN2N	ELNPSN	D		2250	GENR3N	TLNPSN	T		2127
ESIN3N	ELNPSN	D		2252	GNRP1N	TLNPSN	T		1421
ESIN4N	ELNPSN	D		2166	GNRP2N	TLNPSN	T		1461
ESIN5N	ELNPSN	D		2256	GNRP3N	TLNPSN	T		1516
ESIN6N	ELNPSN	D		2261	GNRP4N	TLNPSN	T		1542

TABLE 3-3. (Continued)

ITEM	ROUTINE	CLASS	INIT. CONT.	LOC.	ITEM	ROUTINE	CLASS	INIT. CONT.	LOC.
HDGSPN	TLNPSN	T		1313	NKN	NOISEN	T		1066
INPOSN	TKSCIN	D		2440	NK1N	NOISEN	T		1067
INTCKN	EXECTN	T		616	NK2N	NOISEN	T		1070
INWDCN	TKSCIN	T		2442	NK3N	NOISEN	T		1071
IRPISN	TKSCIN	T		2435	NK9N	NOISEN	T		1077
KIN	TRENIN	T		2372	NNN	NOISEN	D		1102
KONEN	TLNPSN	D	•	1653	NOISEN	ROUTINE	T		626
KN	ERRORN	T		1133	NONEN	ELNPSN	T		2262
K1N	ERRORN	T		1134	NOSHTN	TLNPSN	D		1634
K2N	ERRORN	T		1135	NRN	NOISEN	D		1101
LCTN	ERRORN	D		1141	NSN	NOISEN	D		1103
LESS1N	EXECTN	T		547	NSVALN	TLNPSN	T		1630
LEVELN	TLNPSN	T		1367	NTABN	TABLE	T	•	5162
LEVL1N	ELNPSN	T		2062	NTENN	ELNPSN	T		[illegible]
LEXITN	TRERRN	T		2452	NVALN	TLNPSN	D		1633
LIMITN	ECTABN	T		2513	N1N	NOISEN	T		632
LNIN	EXECTN	T		524	N2N	NOISEN	T		635
LVEL1N	TLNPSN	T		1432	N3N	NOISEN	T		660
LVEL2N	TLNPSN	T		1472	N4AN	NOISEN	T		746
MASKN	CNTRLN	T		1245	NK4N	NOISEN	T		1072
MASK1N	CNTRLN	T		1246	NK5N	NOISEN	T		1073
MOFZN	CONCUN	D		2533	NK6N	NOISEN	T		1074
MODJPN	EXECTN	T		617	NK7N	NOISEN	T		1075
MZVELN	EXECTN	D		622	NK8N	NOISEN	T		1076
NAN	NOISEN	D		1104	N4N	NOISEN	T		713
NBN	NOISEN	D		1105	N5N	NOISEN	T		760
NCN	NOISEN	T		1106	N6N	NOISEN	T		1013
NCOUN	TLNPSN	T		1670	N7N	NOISEN	T		1034
NDN	NOISEN	T		1107	N8N	NOISEN	T		1040
NFIVEN	ELNPSN	T		2263	N9N	NOISEN	T		1053
NKAN	NOISEN	T		1100	N11N	NOISEN	T		1056

TABLE 3-3. (Continued)

ITEM	ROUTINE	CLASS	INIT. CONT.	LOC.	ITEM	ROUTINE	CLASS	INIT. CONT.	LOC.
N15N	ELNPSN	T		2265	STEPUN	TLNPSN	T		1323
N20N	ELNPSN	T		2266	STLIN	CONCON	T		2532
N30N	ELNPSN	T		2267	SVSRPN	TLNPSN	T		1444
N45N	ELNPSN	T		2270	SWJPN	EXECTN	T		542
N60N	ELNPSN	T		2277	TCNWDN	CNTRLN	D		1243
PKN	TROUTN	T		2555	TEFN	TROUTN	T		2554
POSWN	TLNPSN	T		1262	TEHISN	TRPDZN	D		3004
POSZRN	TLNPSN	T		1300	TEMPN	ERRORN	D		1136
P180N	TKSCIN	T		2445	TEN	ECTABN	T		2512
P360N	TKSCIN	T		2446	TESTN	ECTABN	D		2514
REENTN	TKSCIN	T		2405	TETABN	TABLE	T	•	3210
REFN	DATRDN	T		3162	THISTN	TRPDZN	D		3007
REQCON	TKSCIN	T		2436	TIMEN	CLOCKN	T		1201
RESTRN	TLNPSN	T		1335	TIMERN	CLOCKN	D		1200
ROFTN	TLNPSN	D		1644	TKSCIN	ROUTINE	T		2375
ROFT1N	TLNPSN	D		1645	TLNPSN	ROUTINE	T		1250
SA[illegible]N	EXECTN	T		512	TNPOSN	EXECTN	T		516
SA[illegible]	TLNPSN	D		1504	TRENIN	ROUTINE	T		2352
SETN	TLNPSN	T		1640	TRERRN	ROUTINE	T		2447
SINEN	TLNPSN	T		1551	TROUTN	ROUTINE	T		2534
SINE1N	TLNPSN	D		1654	TRPDZN	ROUTINE	T		2743
SINE2N	TLNPSN	D		1655	TRVELN	ROUTINE	T		2272
SINE4N	TLNPSN	D		1575	TSINEN	TLNPSN	D		1672
SIN2EN	TLNPSN	T		1671	TSIN4N	TLNPSN	D		1675
SIN2AN	TLNPSN	D		1700	TWON	TKSCIN	T		2444
SERP[illegible]	TLNPSN	T		1530	TWSRPN	TLNPSN	T		1403
S[illegible]WCON	TLNPSN	D		1647	VARCON	EXECTN	T	•	620
S[illegible]WC1N	TLNPSN	D		1650	VARNUN	EXECTN	T		621
SQW[illegible]2N	TLNPSN	D		1651	VARTMN	EXECTN	T		502
SQW[illegible]	TLNPSN	D		1646	VELOCN	TRVELN	D		2321
SQWN	TLNPSN	D		1316	VFLAGN	TRVELN	D		2317

TABLE 3-3. (Continued)

ITEM	ROUTINE	CLASS	INIT. CONT.	LOC.
VSIZEN	TRVELN	T		2320
VTEMPN	TRVELN	D		2315
VTIMEN	TRVELN	T	•	2301
WAITIN	TKSCIN	T		2404
WAITSN	EXECTN	T		513
WONEN	TRERRN	T		2457
WON	TLNPSN	T		1667
ZRAMPN	TLNPSN	T		1401
ZRON	TLNPSN	T		1666

4.0 QUALITY ASSURANCE

Since the computer program described was designed for feasibility demonstration only and not for operational environment, no formal quality assurance procedures beyond those required to effectively implement the program were taken. Prior to the tests described in Parts 5 and 6, the control function portions of the program were rigorously tested at NELC. Control functions were tested by digital simulation of launcher functions; control equations were tested in a hybrid simulation using the EAI TR-48 analog computer and the UNIVAC CP 789 digital computer, and the results in all cases indicated the validity of the respective equations and program sequences.

No capability for simulating launcher input and output interfaces existed at NELC, and therefore complete program tests could not be run prior to the feasibility demonstrations that were held at NWTCP during the period 10 July – 28 August 1968. These tests conclusively demonstrated the validity of the program and the feasibility of launcher control by digital techniques. Comprehensive documentation of the tests will be found in Parts 5 and 6.

5.0 SUPPLEMENTARY STRUCTURAL DETAILS

5.1 General

The information contained in this section is presented to assist in understanding the computer program structure. Since the program was not designed for an operational environment, many functions contained within it will not be needed in order to achieve operational launcher control by digital techniques.

The Appendix contains a suggested format for an operational control program. The approach to the design and implementation of the program is predicated upon demonstrating the feasibility of digital control; therefore many variables are included to insure that all predictable operational functions can be thoroughly checked. No extensive effort has been made to optimize the program. The program, involving complete closed-loop digital control, represents a complex programming effort. The computer performs the functions of launcher order generation, error determination, and nonlinear and linear compensation. Table 3-4 shows a comparison between conventional analog fire-control symbols and the digital equivalents used in the program.

TABLE 3-4. SYMBOLOGY

Analog Symbol	Digital Equivalent	Definition
Bdg'	COFTN	Launcher train position
Edg'	ECOFTN	Launcher elevation position
Bdg1'	ROFTN	Train ition order
Edg1'	EROFTN	Elevation position order
DBdg'	*VELOCN	Train velocity order
DEdg'	*EVELCN	Elevation velocity order

**Filtered and multiplied by a gain constant.*

5.2 Philosophy

Program operation is as close an approach to launcher digital control as can be achieved in a nonoperational or test environment. All functions of launcher control are performed by the digital computer. The control signal is converted to an analog output and fed to an amplifier that feeds the launcher torque motor. The feedback path to the computer can take one of two paths: (1) through a digital data converter that converts coarse and fine synchro signals to digital quantities, and (2) through a 15-bit Brush encoder that converts the launcher shaft portion directly to digital data. This feedback information is used by the computer in error determination. The two feedback paths were provided for failure back-up and to demonstrate the feasibility of using shaft-to-digital encoders in such a situation.

The total computer program comprises 25 routines and was designed and implemented, as previously stated, to demonstrate feasibility, but it is readily adaptable to modification for use in an operational environment. Storage allocation can be drastically reduced since only the error-curve tables would be required for reference. The routines used in the operational program can be optimized, and since only a single sampling rate would be used, those routines affected by sampling rate would become shorter and less complex.

5.3 Program Listing

This Section contains a printed output listing (table 3-5) of the current computer program. The listing contains all instructions and, with the material contained in the foregoing Sections of Part 3, constitutes a complete computer program design.

TABLE 3-5. PROGRAM LISTING

```
MEM. STRG. USED  2512
00500  THRU  03206
00321  THRU  00321
04175  THRU  04175
05162  THRU  05162

  0  □        □PRØG'ASRØC'(WRITTENIN1968BYR.NEWLIN)
88
00500  12 0616  1  □EXECTN □ENTAL'INTCKN□SYNC INTERRUPT INSTR
00501  44 0016  2  □       □STRAL'16
00502  10 0621  3  □VARTMN □ENTAU'VARNUN□CALCULATES SAMPLES/SEC
00503  50 4322  4  □       □RSHA'18D
00504  26 1201  5  □       □DIVA'TIMEN
00505  44 0620  6  □       □STRAL'VARCØN
00506  76 0626  7  □       □RJP'NØISEN
00507  76 1110  10  □ERSUBN □RJP'ERRØRN□TRAIN ERRØR TABLE GENERATØR

00510  76 1142  11  □       □RJP'ERTBGN□ELEV ERR TAB GEN
00511  50 5640  12  □       □STØP'
00512  76 1171  13  □SAMTMN □RJP'CLØCKN□SAMPLE TIME SUBRØUTINE
00513  50 2400  14  □WAITSN □WTFI'□WAIT FØR SYNC INTERRUPT
00514  34 0513  15  □       □JP'WAITSN
00515  76 1202  16  □CØNTRN □RJP'CNTRLN□CØNTRØL PANEL SUBRØUTINE
00516  76 1250  17  □TNPØSN □RJP'TLNPSN□TRAIN POSITION CØMMANDS
00517  76 1701  20  □       □RJP'ELNPSN□ELEV PØS CØMMANDS

00520  76 2272  21  □       □RJP'TRVELN□CALCULATE TRAIN VELØCITY
00521  76 2322  22  □       □RJP'ELVELN□CALCULATE ELEV VELØCITY
00522  50 5004  23  □       □SKP'4
00523  34 0526  24  □       □JP'LØK+3
00524  76 2352  25  □LNIN   □RJP'TRENIN□INPUT TRAIN PØS VIA ENCØDER
00525  34 0527  26  □       □JP'LØK+2
00526  76 2375  27  □       □RJP'TKSCIN□INPUT TRAIN PØS VIA KSC
00527  76 2447  30  □       □RJP'TRERRN□CALCULATE TRAIN ERRØR

00530  10 2455  31  □       □ENTAU'A1RN
00531  50 4412  32  □       □SF'10D
00532  12 0017  33  □       □ENTAL'17
00533  61 0542  34  □       □JPALZ'SWJPN
00534  40 0617  35  □       □CL'MØDJPN
00535  76 2460  36  □ECTN   □RJP'ECTABN□TRAIN ERRØR TABLE LØØKUP
00536  56 0005  37  □       □CLEAR'6'TERISN
00537  41 3004
```

TABLE 3-5. (Continued)

```
00540  73 0537
00541  34 0552  40  □        □JP'ADDVLN
00542  57 0617  41  □SWJPN   □ISK'MØDJPN
00543  34 0547  42  □        □JP'LESSIN
00544  50 4401  43  □        □SF'1
00545  12 0017  44  □        □ENTAL'17
00546  63 0555  45  □        □JPALNZ'ECTN
00547  70 0001  46  □LESSIN  □ENTALK'1

00550  44 0617  47  □        □STKAL'MØDJPN
00551  76 2516  50  □CNCOMN  □KJP'CØNCØN□CØMPLETE TRAIN CØNTRØLLER CALCU
00552  12 2553  51  □ADDVLN  □ENTAL'MØFZN
00553  14 2321  52  □        □ADDAL'VELØCN□ADDS VELØCITY TØ TRAIN M(Z)
00554  44 0622  53  □        □STKAL'MZVELN□STØRE FØR ØUTPUTTING
00555  76 2534  54  □        □RJP'TRØUTN□ØUTPUT TRAIN CØMMAND
00556  50 5004  55  □        □SKP'4
00557  34 0562  56  □        □JP'LØK+3

00560  76 2557  57  □        □RJP'ELENIN□INPUT ELEV PØS VIA ENCØDER
00561  34 0563  60  □        □JP'LØK+2
00562  76 2603  61  □        □RJP'EKSCIN□INPUT ELEV PØS VIA KSC
00563  76 2637  62  □        □KJP'ELERRN□CALC ELEV ERØR
00564  10 2645  63  □        □ENTAU'EAIRN
00565  50 4412  64  □        □SF'10D
00566  12 0017  65  □        □ENTAL'17
00567  61 0576  66  □        □JPALZ'ESWJPN

00570  40 0624  67  □        □CL'ELCFGN
00571  76 2647  70  □ELECTN  □RJP'ELERLN□ELEV ERRØR TAB LØØKUP
00572  36 0005  71  □        □CLEAR'6'EEHISN
00573  41 3053
00574  73 0573
00575  34 0606  72  □        □JP'EADVLN
00576  57 0624  73  □ESWJPN  □ISK'ELCFGN
00577  34 0603  74  □        □JP'ELESIN

00600  50 4401  75  □        □SF'1
00601  12 0017  76  □        □ENTAL'17
00602  63 0571  77  □        □JPALNZ'ELECTN
00603  70 0001  100  □ELESIN  □ENTALK'1
00604  44 0624  101  □        □STKAL'ELCFGN
00605  76 2704  102  □CMEC[illegible]  □RJP'CØMCØN□CØMPLETE ELEV CØNT CALC
00606  12 2703  103  □EA[illegible]  □ENTAL'EMØFZN
00607  14 2351  104  □        □ADDAL'EVELCN□ADDS VEL TØ ELEV M(Z)
```

TABLE 3-5. (Continued)

```
00610  44 0625  105  □        □STRAL'EMZVLN□STORE FOR OUTPUTTING
00611  76 2721  106  □        □RJP'ELOUTN□OUTPUT ELEV COMMAND
00612  76 2743  107  □        □RJP'TRPDZN□CALC TRAIN D(Z),NEXT PASS
00613  76 3012  110  □        □RJP'ELPDZN□CALC ELEV D(Z),NEXT PASS
00614  76 3061  111  □DISPLN  □RJP'DATRDN□DATA TO BRUSH RECORDER
00615  34 0513  112  □        □JP'WAITSN
00616  76 1171  113  □INTCKN  □RJP'CLOCKN
00617  00 0000  114  □NOJPN   □0'

00620  00 0000  115  □VARC0N  □0'□SAMPLES PER SECOND
00621  00 2000  116  □VARNUN  □1024D'
00622  00 0000  117  □MZVELN  □0'□TRAIN M(Z) PLUS VELOCITY, SF7
00623  00 0000  120  □        □0'
00624  00 0000  121  □ELCFGN  □2'
00625  00 0000  122  □EMZVLN  □0'□ELEV M(Z) PLUS VEL,SF7
00626  00 0000  123  □NOISEN  □0'□NOISE TABLE RTN
00627  12 1067  124  □        □ENTAL'NXIN

00630  44 1101  125  □        □STRAL'NRN
00631  40 0001  126  □        □CL'1
00632  50 7202  127  □NIN     □ENTICR'2
00633  40 0002  130  □        □CL'2
00634  40 1102  131  □        □CL'NNN
00635  12 1101  132  □N2N     □ENTAL'NRN
00636  52 1106  133  □        □SLCL'NCN
00637  14 0001  134  □        □ADDAL'1

00640  14 0002  135  □        □ADDAL'2
00641  24 1070  136  □        □MULAL'NX2N
00642  44 1101  137  □        □STRAL'NRN
00643  50 4212  140  □        □RSHAL'12
00644  14 1102  141  □        □ADDAL'NNN
00645  44 1102  142  □        □STRAL'NRN
00646  56 1071  143  □        □BSK'NK5N
00647  34 0635  144  □        □JP'N2N

00650  50 7201  145  □        □ENTICR'1
00651  45 5162  146  □        □STRAL3'NTARN
00652  56 1072  147  □        □BSK'NA4N
00653  34 0632  150  □        □JP'N1N
00654  40 0001  151  □        □CL'1
00655  40 1103  152  □        □CL'NSN
00656  40 1104  153  □        □CL'NAN
00657  40 1105  154  □        □CL'NBN
```

TABLE 3-5. (Continued)

```
00660   13 5162   155   □N3N     □ENTAL3'NTA3N
00661   14 1103   156   □        □ADDAL'NSN
00662   44 1103   157   □        □STRAL'NSN
00663   13 5162   160   □        □ENTAL3'NTA3N
00664   50 4606   161   □        □LSHAL'6
00665   16 1103   162   □        □SUBAL'NSN
00666   16 1103   163   □        □SUBAL'NSN
00667   16 1103   164   □        □SUBAL'NSN

00670   14 1104   165   □        □ADDAL'NAN
00671   44 1104   166   □        □STRAL'NAN
00672   13 5162   167   □        □ENTAL3'NTA3N
00673   50 4605   170   □        □LSHAL'5
00674   16 1103   171   □        □SUBAL'NSN
00675   16 1103   172   □        □SUBAL'NSN
00676   14 1105   173   □        □ADDAL'N3N
00677   44 1105   174   □        □STRAL'N3N

00700   56 1073   175   □        □3SK'NK5N
00701   34 0660   176   □        □JP'N5N
00702   37 0001   177   □        □ENT3K3'1
00703   12 5162   200   □        □ENTAL'NTA3N
00704   50 4605   201   □        □LSHAL'5
00705   44 1102   202   □        □STRAL'NNN
00706   14 1104   203   □        □ADDAL'NAN
00707   44 1104   204   □        □STRAL'NAN

00710   12 1102   205   □        □ENTAL'NNN
00711   50 4203   206   □        □RSHAL'3
00712   44 1105   207   □        □STRAL'N3N
00713   13 5162   210   □N4N     □ENTAL3'NTA3N
00714   17 5122   211   □        □SUBAL3'NTA3N-40
00715   14 1103   212   □        □ADDAL'NSN
00716   44 1103   213   □        □STRAL'NSN
00717   13 5162   214   □        □ENTAL3'NTA3N

00720   15 5162   215   □        □ADDAL3'NTA3N
00721   15 5123   216   □        □ADDAL3'NTA3N-37
00722   50 4605   217   □        □LSHAL'5
00723   16 1103   220   □        □SUBAL'NSN
00724   16 1103   221   □        □SUBAL'NSN
00725   16 1103   222   □        □SUBAL'NSN
00726   14 1104   223   □        □ADDAL'NAN
00727   44 1104   224   □        □STRAL'NAN
```

TABLE 3-5. (Continued)

```
00730  13 5162  225  0      DENTALB*NTABN
00731  15 5123  226  0      DADDALB*NTABN-37
00732  50 4605  227  0      DLSHAL*5
00733  16 1103  230  0      DSUBAL*NSN
00734  16 1103  231  0      DSUBAL*NSN
00735  14 1105  232  0      DADDAL*NBN
00736  44 1105  233  0      DSTRAL*NBN
00737  12 1104  234  0      DENTAL*NAN

00740  50 4204  235  0      DRSHAL*4
00741  14 1105  236  0      DADDAL*NDN
00742  50 4207  237  0      DRSHAL*7
00743  45 5122  240  0      DSTRALB*NTABN-40
00744  56 1072  241  0      DBSK*NK4N
00745  34 0713  242  0      DJP*N4N
00746  40 0001  243  DN4AN  DCL*1
00747  70 0000  244  0      DENTALA*0

00750  10 1074  245  0      DENTAU*NK6N
00751  50 4301  246  0      DRSHA*1
00752  26 1201  247  0      DDIVA*TIMEN
00753  44 1066  250  0      DSTRAL*NKN
00754  50 4213  251  0      DRSHAL*11D
00755  61 1034  252  0      DJPALZ*N7N
00756  50 4201  253  0      DRSHAL*1
00757  61 1013  254  0      DJPALZ*N6N

00760  13 6622  255  DN59   DENTALB*NTABN+8000
00761  44 1103  256  0      DSTRAL*NSN
00762  17 6623  257  0      DLSHA*180
00763  50 4722  260  0      DRSHA*180
00764  50 4322  261  0      DDIVA*NDN
00765  26 1107  262  0      DDPAL*
00766  50 6100  263  0      DSTRAL*NAN
00767  44 1104  264  0

00770  42 1105  265  0      DSTRB*NBN
00771  12 1105  266  0      DENTAL*NBN
00772  50 4602  267  0      DLSHAL*2
00773  14 1105  270  0      DADDAL*NBN
00774  44 0001  271  0      DSTRAL*1
00775  12 1103  272  0      DENTAL*NSN
00776  45 5162  273  0      DSTRALB*NTABN
00777  14 1104  274  0      DADDAL*NAN
```

TABLE 3-5. (Continued)

01000	45	5163	275	□	□STRALB'NTABN+1
01001	14	1104	276	□	□ADDAL'NAN
01002	45	5164	277	□	□STRALB'NTABN+2
01003	14	1104	300	□	□ADDAL'NAN
01004	45	5165	301	□	□STRALB'NTABN+3
01005	14	1104	302	□	□ADDAL'NAN
01006	45	5166	303	□	□STRALB'NTABN+4
01007	32	1105	304	□	□ENTB'NBN
01010	56	1075	305	□	□BSK'NK7N
01011	34	0760	306	□	□JP'N5N
01012	34	1034	307	□	□JP'N7N
01013	13	6146	310	□N6N	□ENTALB'NTABN+500D
01014	44	1103	311	□	□STRAL'NSN
01015	17	6147	312	□	□SUBALB'NTABN+501D
01016	50	4201	313	□	□RSHAL'1
01017	50	6100	314	□	□CPAL'
01020	44	1104	315	□	□STRAL'NAN
01021	42	1105	316	□	□STRB'NBN
01022	12	1105	317	□	□ENTAL'NBN
01023	50	4601	320	□	□LSHAL'1
01024	44	0001	321	□	□STRAL'1
01025	12	1103	322	□	□ENTAL'NSN
01026	45	5162	323	□	□STRALB'NTABN
01027	14	1104	324	□	□ADDAL'NAN
01030	45	5163	325	□	□STRALB'NTABN+1
01031	32	1105	326	□	□ENTB'NBN
01032	56	1076	327	□	□BSK'NK8N
01033	34	1013	330	□	□JP'N6N
01034	40	0001	331	□N7N	□CL'1
01035	40	7133	332	□	□CL'NTABN+1001D
01036	40	7134	333	□	□CL'NTABN+1002D
01037	40	1103	334	□	□CL'NSN
01040	13	5162	335	□N8N	□ENTALB'NTABN
01041	14	7133	336	□	□ADDAL'NTABN+1001D
01042	44	7133	337	□	□STRAL'NTABN+1001D
01043	13	5162	340	□	□ENTALB'NTABN
01044	25	5162	341	□	□MULALB'NTABN
01045	50	4307	342	□	□RSHAL'7
01046	14	1103	343	□	□ADDAL'NSN
01047	44	1103	344	□	□STRAL'NSN

TABLE 3-5. (Continued)

```
01050  57 1077  345  □        □ISK'NK9N
01051  34 1053  346  □        □JP'N9N
01052  34 1056  347  □        □JP'N11N
01053  56 1100  350  □N9N     □3SK'NKAN
01054  34 1040  351  □        □JP'N8N
01055  55 0626  352  □        □IJP'N01SEN
01056  12 1103  353  □N11N    □ENTAL'NSN
01057  50 4207  354  □        □RSHAL'7

01060  14 7134  355  □        □ADDAL'NTA3N+1002D
01061  44 7134  356  □        □STRAL'NTA3N+1002D
01062  40 1103  357  □        □CL'NSN
01063  70 0177  360  □        □ENTALK'127D
01064  44 1077  361  □        □STRAL'NK9N
01065  34 1053  362  □        □JP'N9N
01066  00 0000  363  □NKN     □0'
01067  17 5631  364  □NK1N    □175631'

01070  23 0455  365  □NK2N    □230455'
01071  00 0013  366  □NK3N    □13'
01072  00 2010  367  □NK4N    □2010'
01073  00 0037  370  □NK5N    □37'
01074  00 0001  371  □NK6N    □1'
01075  00 0307  372  □NK7N    □199D'
01076  00 0763  373  □NK8N    □499D'
01077  00 0177  374  □NK9N    □127D'

01100  00 1750  375  □NKAN    □1000D'
01101  00 0000  376  □NRN     □0'
01102  00 0000  377  □NNN     □0'
01103  00 0000  400  □NSN     □0'
01104  00 0000  401  □NAN     □0'
01105  00 0000  402  □NBN     □0'
01106  37 7777  403  □NCN     □377777'
01107  00 0005  404  □NDN     □5'

01110  00 0000  405  □ERR0RN  □0'□TRAIN ERROR CURVE TABLE GENERATOR
01111  10 1140  406  □        □ENTAU'AZER0N□CLEARS AU REG
01112  12 1135  407  □        □ENTAL'K2N
01113  44 0325  410  □        □STRAL'TETA0N+4
01114  44 1136  411  □        □STRAL'TEMPN
01115  50 7201  412  □        □ENTICK'1
01116  36 0005  413  □        □ENTBK'5□STARTS STORING AT 1 DEGREE
01117  12 1136  414  □AL00PN  □ENTAL'TEMPN□START CALCULATING VALUE
```

TABLE 3-5. (Continued)

```
01120  14 1134  415  □        □ADDAL'KIN
01121  44 1137  416  □        □STRAL'TEMPN+1
01122  12 1133  417  □        □ENTAL'KN
01123  26 1137  420  □        □DIVA'TEMPN+1
01124  14 1136  421  □        □ADDAL'TEMPN
01125  44 1136  422  □        □STRAL'TEMPN
01126  45 0321  423  □        □STRALB'TETABN□STØRES VALUE IN TABLE
01127  10 1140  424  □        □ENTAU'AZERØN

01130  56 1141  425  □        □BSK'LCTN□5000
01131  34 1117  426  □        □JP'ALØØPN□NØT FINISHED
01132  55 1110  427  □        □IJP'ERRØRN□EXIT
01133  12 1727  430  □KN      □121727'
01134  00 1027  431  □KIN     □1027'
01135  00 0700  432  □K2N     □700'
01136  00 0000  433  □TEMPN   □0'
01137  00 0000  434  □        □0'

01140  00 0000  435  □AZERØN  □0'
01141  00 0764  436  □LCTN    □5000'
01142  00 0000  437  □ERTBGN  □0'□ELEV ERRØR CURVE TAB GENERATØR
01143  10 1140  440  □        □ENTAU'AZERØN
01144  12 1167  441  □        □ENTAL'EK2N
01145  44 4201  442  □        □STRAL'ELETBN+4
01146  44 1136  443  □        □STRAL'TEMPN
01147  50 7201  444  □        □ENTICR'1

01150  36 0005  445  □        □ENTBK'5
01151  12 1136  446  □ELØØPN  □ENTAL'TEMPN
01152  14 1166  447  □        □ADDAL'EKIN
01153  44 1137  450  □        □STRAL'TEMPN+1
01154  12 1165  451  □        □ENTAL'EKN
01155  26 1137  452  □        □DIVA'TEMPN+1
01156  14 1136  453  □        □ADDAL'TEMPN
01157  44 1136  454  □        □STRAL'TEMPN

01160  45 4175  455  □        □STRALB'ELETBN
01161  10 1140  456  □        □ENTAU'AZERØN
01162  56 1170  457  □        □BSK'ELCTN
01163  34 1151  460  □        □JP'ELØØPN
01164  55 1142  461  □        □IJP'ERTBGN
01165  12 1727  462  □EKN     □121727'
01166  00 1027  463  □EKIN    □1027'
01167  00 0700  464  □EK2N    □700'
```

TABLE 3-5. (Continued)

```
01170  00 0764  465  □ELCTN   □5000'
01171  00 0000  466  □CLOCKN  □0'□SAMPLE PERIOD SUBROUTINE
01172  57 1200  467  □        □ISA'TIMERN□COUNTS TIME
01173  54 1171  470  □        □IJPEI'CLOCKN□NOT TIME YET
01174  12 1201  471  □        □ENTAL'TIMEN□INITIALIZE TIME PERIOD
01175  40 1200  472  □        □STRAL'TIMERN
01176  50 3000  473  □        □RIL'□ENABLE ALL INTERRUPTS
01177  34 0515  474  □        □JP'□CONTRN□TO CONTROL PANEL SUBROUTINE

01200  00 0000  475  □TIMERN  □0'□VALUE BEING DECREMENTED
01201  02 0062  476  □TIMEN   □5000'□0.02 SEC PERIOD
01202  00 0000  477  □CNTRLN  □0'
01203  12 1247  500  □        □ENTAL'CONWDN
01204  50 1100  501  □        □SUFIN'0'AD'1'CONWDN
01205  50 1247
01206  00 1247
01207  52 1245  502  □        □SLCL'MASKN

01210  10 1140  503  □        □ENTAU'AZERON
01211  50 4704  504  □        □LSHA'4
01212  50 4204  505  □        □RSHAL'4
01213  46 1242  506  □        □STRAU'ECNWDN+1
01214  44 1244  507  □        □STRAL'TCNWDN+1
01215  50 1500  510  □        □INSTP'0
01216  12 1247  511  □        □ENTAL'CONWDN
01217  52 1245  512  □        □SLCL'MASKN

01220  10 1140  513  □        □ENTAU'AZERON
01221  50 4704  514  □        □LSHA'4
01222  50 4204  515  □        □RSHAL'4
01223  46 1241  516  □        □STRAU'ECNWDN
01224  44 1243  517  □        □STRAL'TCNWDN
01225  02 1244  520  □        □CMAL'TCNWDN+1
01226  61 1232  521  □        □JPEQ'CNELCN
01227  35 0007  522  □        □CLEAR'00'RETN

01230  41 1644
01231  73 1230
01232  50 4322  523  □CNELCN  □RSHA'18D
01233  02 1242  524  □        □CMAL'ECNWDN+1
01234  61 1240  525  □        □JPEQ'CENDN
01235  36 0010  526  □        □CLEAR'00'ERETN
01236  41 2236
01237  73 1236
```

TABLE 3-5. (Continued)

```
01240  55 1202  527  □CENDN   □IJP'CNTRLN
01241  00 0000  530  □ECNWDN  □0'
01242  00 0000  531  □        □0'
01243  00 0000  532  □TCNWDN  □0'
01244  00 0000  533  □        □0'
01245  74 0017  534  □MASKN   □740017'
01246  01 0000  535  □MASKIN  □010000'
01247  00 0000  536  □CONWDN  □0'

01250  00 0000  537  □TLNPSN  □0'□TRAIN POSITION COMMANDS
01251  12 1644  540  □        □ENTAL'ROFTN□SHIFT R(T)
01252  44 1645  541  □        □STRAL'ROFTN
01253  50 7201  542  □        □ENTICK'1
01254  12 1243  543  □        □ENTAL'TCNWDN
01255  52 1245  544  □        □SLCL'MASKN□REMOVES NOISE BITS
01256  44 0001  545  □        □STRAL'1□CONTROL WORD INTO B1
01257  70 0014  546  □        □ENTALA'12D□CHECKS TO SEE IF REQUESTED

01260  16 0001  547  □        □SUBAL'1□FUNCTION EXISTS
01261  67 1263  550  □        □JPALNG'PASWN+1□ILLEGAL FUNCTION CODE
01262  35 1263  551  □PASWN   □JP3'PASWN+1
01263  34 1300  552  □        □JP'PASZRN□JUMPS TO ZERO COMMAND
01264  34 1302  553  □        □JP'DEGSPN□1 DEGREE STEP
01265  34 1305  554  □        □JP'FDGSPN□10 DEGREE STEP
01266  34 1310  555  □        □JP'FHDSPN□45 DEGREE STEP
01267  34 1313  556  □        □JP'HDGSPN□90 DEGREE STEP

01270  34 1316  557  □        □JP'SQUN□75 DEGREE SQUARE WAVE
01271  34 1340  560  □        □JP'FDSRPN□5 DEGREE/SEC RAMP
01272  34 1403  561  □        □JP'TVSRPN□20 DEGREE/SEC RAMP
01273  34 1444  562  □        □JP'SVSRPN□30 DEGREE/SEC RAMP
01274  34 1530  563  □        □JP'SPRPN□30 STEP,15 RAMP
01275  34 1504  564  □        □JP'SAWN□SAWTOOTH
01276  34 1551  565  □        □JP'SINEN□SINEWAVE, 30/9
01277  34 1575  566  □        □JP'SINE4N□SINEWAVE, 17/4.5

01300  46 1644  567  □PASZRN  □CL'ROFTN□ZEROS POSITION R(T)
01301  34 1620  570  □        □JP'ADDN□GOES TO ADD NOISE
01302  70 2200  571  □DEGSPN  □ENTALA'2200□1 DEGREE STEP
01303  44 1644  572  □        □STRAL'ROFTN
01304  34 1620  573  □        □JP'ADDN
01305  70 2400  574  □FDGSPN  □ENTALA'2400□10 DEGREE STEP
01306  44 1644  575  □        □STRAL'ROFTN
01307  34 1622  576  □        □JP'ADDN
```

TABLE 3-5. (Continued)

```
01310  12 1661  577  □FRDSPN  □ENTAL'D45N□45 DEG STEP
01311  44 1644  600  □        □STRAL'RØFTN
01312  34 1620  601  □        □JP'ADDN
01313  12 1664  602  □HDGSPN  □ENTAL'D90N□90 DEGREE STEP
01314  44 1644  603  □        □STRAL'RØFTN
01315  34 1620  604  □        □JP'ADDN
01316  70 0012  605  □SQWN    □ENTALK'10D□10SEC PERIØD
01317  24 0620  606  □        □MULAL'VARCØN□SAMPLES PER SECØND

01320  44 1647  607  □        □STRAL'SQWCN□SAMPLES PER CYCLE
01321  50 4201  610  □        □RSHAL'1
01322  44 1650  611  □        □STRAL'SQWCIN□HALF PERIØD
01323  57 1646  612  □STEPUN  □ISK'SQWIN□IS CYCLE CØMPLETED
01324  34 1326  613  □        □JP'ENTVAN□NØ
01325  34 1335  614  □        □JP'RESTRN□YES
01326  12 1663  615  □ENTVAN  □ENTAL'D75N□75 DEGREE STEP SIZE
01327  44 1644  616  □        □STRAL'RØFTN

01330  12 1650  617  □        □ENTAL'SQWCIN□HALF PERIØD
01331  16 1646  620  □        □SUBAL'SQWIN□INDEX CØUNT
01332  67 1334  621  □        □JPALNG'EXN□JUMP IF STEP IS TØ BE 75 DEG
01333  40 1644  622  □        □CL'RØFTN□ZERØS R(T)
01334  34 1620  623  □EXN     □JP'ADDN
01335  12 1647  624  □RESTRN  □ENTAL'SQWCN□RESTØRES INDEX
01336  44 1646  625  □        □STRAL'SQWIN
01337  34 1323  626  □        □JP'STEPUN

01340  12 1652  627  □FDSRPN  □ENTAL'DELTAN□ZERØ ØN FIRST PASS
01341  63 1353  630  □        □JPALNZ'CYCLEN□SKIPS GEN ØF CØNST. AFTER
01342  70 0022  631  □        □ENTALK'18D□GENERATE CYCLE SWITCH PØINTS
01343  24 0620  632  □        □MULAL'VARCØN
01344  44 1651  633  □        □STRAL'SQWC2N□18 SECØNDS
01345  50 4201  634  □        □RSHAL'1
01346  14 1651  635  □        □ADDAL'SQWC2N
01347  44 1650  636  □        □STRAL'SQWCIN□27 SECØNDS

01350  14 1651  637  □        □ADDAL'SQWC2N
01351  44 1647  640  □        □STRAL'SQWCN□45 SECØNDS
01352  34 1354  641  □        □JP'LØK+2
01353  57 1647  642  □CYCLEN  □ISK'SQWCN□RAMP FINISHED
01354  34 1356  643  □        □JP'GENRPN□NØ
01355  34 1401  644  □        □JP'ZRAMPN□YES
01356  76 1200  645  □GENRPN  □ENTALK'1200□CALCULATE RAMP DELTA
01357  24 1667  646  □        □MULAL'WØN
```

TABLE 3-5. (Continued)

```
01360  26 0620  647  □        □DIVA'VARCØN
01361  44 1652  650  □        □STRAL'DELTAN
01362  14 1644  651  □        □ADDAL'RØFTN
01363  44 1644  652  □        □STRAL'RØFTN□NEW RAMP SIZE
01364  12 1650  653  □        □ENTAL'SQWC1N
01365  16 1647  654  □        □SUBAL'SQWCN□HAS TOP ØF RAMP BEEN REACHED
01366  67 1620  655  □        □JPALNG'ADDNØNE
01367  12 1644  656  □LEVELN  □ENTAL'RØFTN□YES SUBTRACT DELTA

01370  16 1652  657  □        □SUBAL'DELTAN
01371  44 1644  660  □        □STRAL'RØFTN
01372  12 1651  661  □        □ENTAL'SQWC2N□TIME TØ CØME DØWN RAMP
01373  16 1647  662  □        □SUBAL'SQWCN
01374  67 1620  663  □        □JPALNG'ADDNØNE
01375  12 1644  664  □DWNRN   □ENTAL'RØFTN□DØWN RAMP
01376  16 1652  665  □        □SUBAL'DELTAN
01377  67 1401  666  □        □JPALNG'ZRAMPN

01400  34 1303  667  □        □JP'DEGSPN+1
01401  40 1644  670  □ZRAMPN  □CL'RØFTN□ZERØ ØUTPUT
01402  34 1620  671  □        □JP'ADDN
01403  12 1652  672  □TWSRPN  □ENTAL'DELTAN□ZERØ ØN FIRST PASS
01404  63 1416  673  □        □JPALNZ'CYCLIN□SKIPS GEN ØF CØNST AFTER
01405  70 0005  674  □        □ENTALK'5
01406  24 0620  675  □        □MULAL'VARCØN
01407  44 1651  676  □        □STRAL'SQWC2N□5 SECØNDS

01410  50 4201  677  □        □RSHAL'1
01411  14 1651  700  □        □ADDAL'SQWC2N
01412  44 1650  701  □        □STRAL'SQWC1N□7.5 SECØNDS
01413  14 1651  702  □        □ADDAL'SQWC2N
01414  44 1647  703  □        □STRAL'SQWCN□12.5 SECØNDS
01415  34 1417  704  □        □JP'LØK+2
01416  57 1647  705  □CYCLIN  □ISK'SQWCN
01417  34 1421  706  □        □JP'GNRPIN

01420  34 1401  707  □        □JP'ZRAMPN□ZERØ ØUTPUT
01421  12 1657  710  □GNRPIN  □ENTAL'D20N□CALCULATE RAMP DELTAN
01422  24 1667  711  □        □MULAL'WØN
01423  26 0620  712  □        □DIVA'VARCØN
01424  44 1652  713  □        □STRAL'DELTAN
01425  14 1644  714  □        □ADDAL'RØFTN
01426  44 1644  715  □        □STRAL'RØFTN□NEW RAMP SIZE
01427  12 1650  716  □        □ENTAL'SQWC1N
```

TABLE 3-5. (Continued)

```
01430  16 1647  717  □        □SUBAL'SQWCN□HAS TØP BEEN REACHED
01431  67 1620  720  □        □JPALNG'ADDN□N0
01432  12 1644  721  □LVEL1N  □ENTAL'RØFIN□YES SUBTRACT DELTA
01433  16 1652  722  □        □SUBAL'DELTAN
01434  44 1644  723  □        □STRAL'RØFTN
01435  12 1651  724  □        □ENTAL'SQWC2N□TIME TØ CØME DØWN RAMP
01436  16 1647  725  □        □SUBAL'SQWCN
01437  67 1620  726  □        □JPALNG'ADDN□N0

01440  12 1644  727  □DWNR1N  □ENTAL'RØFTN□DØWN RAMP
01441  16 1652  730  □        □SUBAL'DELTAN
01442  67 1401  731  □        □JPALNG'ZRAMPN
01443  34 1303  732  □        □JP'DEGSPN+1
01444  12 1652  733  □SVSRPN  □ENTAL'DELTAN□ZERØ ØN FIRST PASS
01445  63 1456  734  □        □JPALNZ'CYCL2N□SKIP CØNSTANT CALCULATIØN
01446  70 0003  735  □        □ENTALK'3□GEN CYCLE SWITCH PØINTS
01447  24 0620  736  □        □MULAL'VARCØN

01450  44 1651  737  □        □STRAL'SQWC2N□3 SECØNDS
01451  50 4201  740  □        □RSHAL'1□ADDAL'SQWC2N
01452  44 1650  741  □        □STRAL'SQWC1N□4.5 SECØNDS
01453  14 1651  742  □        □ADDAL'SQWC2N
01454  44 1647  743  □        □STRAL'SQWCN□7.5 SECØNDS
01455  34 1457  744  □        □JP'LØK+2
01456  57 1647  745  □CYCL2N  □ISK'SQWCN
01457  34 1461  746  □        □JP'GNRP2N

01460  34 1401  747  □        □JP'ZRAMPN
01461  12 1660  750  □GNRP2N  □ENTAL'D3ØN
01462  24 1667  751  □        □MULAL'WØN
01463  26 0620  752  □        □DIVA'VARCØN
01464  44 1652  753  □        □STRAL'DELTAN
01465  14 1644  754  □        □ADDAL'RØFTN
01466  44 1644  755  □        □STRAL'RØFTN
01467  12 1650  756  □        □ENTAL'SQWC1N

01470  16 1647  757  □        □SUBAL'SQWCN
01471  67 1620  760  □        □JPALNG'ADDN
01472  12 1644  761  □LVEL2N  □ENTAL'RØFTN
01473  16 1652  762  □        □SUBAL'DELTAN
01474  44 1644  763  □        □STRAL'RØFTN
01475  12 1651  764  □        □ENTAL'SQWC2N
01476  16 1647  765  □        □SUBAL'SQWCN
01477  67 1620  766  □        □JPALNG'ADDN
```

TABLE 3-5. (Continued)

```
01500  12 1644  767  □DWNR2N  □ENTAL'RØFTN
01501  16 1652  770  □        □SUBAL'DELTAN
01502  67 1401  771  □        □JPALNG'ZRAMPN
01503  34 1303  772  □        □JP'DEGSPN+1
01504  12 1652  773  □SAWN    □ENTAL'DELTAN
01505  67 1513  774  □        □JPALNG'CYCL3N
01506  70 0006  775  □        □ENTALK'6
01507  24 0620  776  □        □MULAL'VARCØN

01510  44 1647  777  □        □STRAL'SQWCN
01511  12 1662  1000 □        □ENTAL'D6ØN
01512  44 1644  1001 □        □STRAL'RØFTN
01513  57 1647  1002 □CYCL3N  □ISK'SQWCN
01514  34 1516  1003 □        □JP'GNRP3N
01515  34 1526  1004 □        □JP'CLRPN
01516  12 1657  1005 □GNRP3N  □ENTAL'D2ØN
01517  24 1667  1006 □        □MULAL'WØN

01520  26 0620  1007 □        □DIVA'VARCØN
01521  50 6100  1010 □        □CPAL'
01522  44 1652  1011 □        □STRAL'DELTAN
01523  14 1644  1012 □        □ADDAL'RØFTN
01524  44 1644  1013 □        □STRAL'RØFTN
01525  34 1620  1014 □        □JP'ADDN
01526  40 1652  1015 □CLRPN   □CL'DELTAN
01527  34 1620  1016 □        □JP'ADDN

01530  12 1652  1017 □SPRPN   □ENTAL'DELTAN
01531  63 1537  1020 □        □JPALNZ'CYCL4N
01532  70 0004  1021 □        □ENTALK'4
01533  24 0620  1022 □        □MULAL'VARCØN
01534  44 1647  1023 □        □STRAL'SQWCN
01535  12 1660  1024 □        □ENTAL'D3ØN
01536  44 1644  1025 □        □STRAL'RØFTN
01537  57 1647  1026 □CYCL4N  □ISK'SQWCN

01540  34 1542  1027 □        □JP'GNRP4N
01541  34 1620  1030 □        □JP'ADDN
01542  12 1656  1031 □GNRP4N  □ENTAL'D15N
01543  24 1667  1032 □        □MULAL'WØN
01544  26 0620  1033 □        □DIVA'VARCØN
01545  44 1652  1034 □        □STRAL'DELTAN
01546  14 1644  1035 □        □ADDAL'RØFTN
01547  44 1644  1036 □        □STRAL'RØFTN
```

TABLE 3-5. (Continued)

```
01550  34 1620  1037  □        □JP'ADDN
01551  12 1653  1040  □SINEN   □ENTAL'KØNEN
01552  63 1557  1041  □        □JPALNZ'CYCL5N
01553  36 0002  1042  □        □MØVE'3'TSINEN'KØNEN
01554  11 1672
01555  47 1653
01556  73 1554
01557  12 1653  1043  □CYCL5N  □ENTAL'KØNEN

01560  24 1654  1044  □        □MULAL'SINE1N
01561  50 4320  1045  □        □RSHA'20
01562  50 6100  1046  □        □CPAL'
01563  14 1654  1047  □        □ADDAL'SINE1N
01564  16 1655  1050  □        □SUBAL'SINE2N
01565  14 1654  1051  □        □ADDAL'SINE1N
01566  10 1654  1052  □        □ENTAU'SINE1N
01567  46 1655  1053  □        □STRAU'SINE2N

01570  44 1654  1054  □        □STRAL'SINE1N
01571  24 1671  1055  □        □MULAL'SINZEN
01572  50 4311  1056  □        □RSHA'9D
01573  44 1644  1057  □        □STRAL'RØFTN
01574  34 1620  1060  □        □JP'ADDN
01575  12 1653  1061  □SINE4N  □ENTAL'KØNEN
01576  63 1603  1062  □        □JPALNZ'CYCL6N
01577  36 0002  1063  □        □MØVE'3'TSIN4N'KØNEN

01600  11 1675
01601  47 1653
01602  73 1600
01603  12 1653  1064  □CYCL6N  □ENTAL'KØNEN
01604  24 1654  1065  □        □MULAL'SINE1N
01605  50 4324  1066  □        □RSHA'20D
01606  50 6100  1067  □        □CPAL'
01607  14 1654  1070  □        □ADDAL'SINE1N

01610  16 1655  1071  □        □SUBAL'SINE2N
01611  14 1654  1072  □        □ADDAL'SINE1N
01612  10 1654  1073  □        □ENTAU'SINE1N
01613  46 1655  1074  □        □STRAU'SINE2N
01614  44 1654  1075  □        □STRAL'SINE1N
01615  24 1700  1076  □        □MULAL'SINZ4N
01616  50 4311  1077  □        □RSHA'9D
01617  44 1644  1100  □        □STRAL'RØFTN
```

TABLE 3-5. (Continued)

```
01620  12 1247  1101  □ADDN    □ENTAL'CØNWDN
01621  52 1246  1102  □        □SLCL'MASKIN
01622  10 1666  1103  □        □ENTAU'ZRØN
01623  50 4706  1104  □        □LSHA'6
01624  60 1637  1105  □        □JPAUZ'FINSHN
01625  57 1670  1106  □        □ISK'NCØUN
01626  34 1630  1107  □        □JP'NSVALN
01627  76 1640  1110  □        □RJP'SETN

01630  70 5162  1111  □NSVALN  □ENTALK'NTABN
01631  14 1670  1112  □        □ADDAL'NCØUN
01632  74 1633  1113  □        □STRADR'NVALN
01633  12 0000  1114  □NVALN   □ENTAL'0
01634  50 4204  1115  □NØSHTN  □RSHAL'4
01635  14 1644  1116  □        □ADDAL'RØFTN
01636  44 1644  1117  □        □STRAL'RØFTN
01637  55 1250  1120  □FINSHN  □IJP'TLNPSN

01640  00 0000  1121  □SETN    □0'
01641  70 1750  1122  □        □ENTALK'10000
01642  44 1670  1123  □        □STRAL'NCØUN
01643  55 1640  1124  □        □IJP'SETN
01644  00 0000  1125  □RØFTN   □0'□NEW PØSITIØN R(T)
01645  00 0000  1126  □RØFTIN  □0'□PØSITIØN ØNE SAMPLE ØLD
01646  00 0000  1127  □SQWIN   □0'
01647  00 0000  1130  □SQWCN   □0'

01650  00 0000  1131  □SQWCIN  □0'
01651  00 0000  1132  □SQWC2N  □0'
01652  00 0000  1133  □DELTAN  □0'
01653  00 0000  1134  □KØNEN   □0'
01654  00 0000  1135  □SINEIN  □0'
01655  00 0000  1136  □SINE2N  □0'
01656  00 3600  1137  □D15N    □3600'□15 DEG
01657  00 5000  1140  □Q20N    □5000'□20 DEG

01660  00 7400  1141  □D30N    □7400'□30 DEG
01661  01 3200  1142  □D45N    □13200'□45 DEG
01662  01 7000  1143  □D60N    □17000'□60
01663  02 2600  1144  □D75N    □22600'□75 DEG
01664  02 6400  1145  □D90N    □26400'□90 DEG
01665  05 0000  1146  □D160N   □50000'□160 DEG
01666  00 0000  1147  □ZRØN    □0'
01667  00 0001  1150  □WØN     □1'
```

TABLE 3-5. (Continued)

```
01670  00 1750  1151  ⌐NCØUN  ⌐10000'⌐NØISE TABLE INDEX
01671  00 0053  1152  ⌐SINZEN ⌐53'⌐GAIN FACTØR ØF 9 SEC SINE
01672  00 0116  1153  ⌐TSINEN ⌐116'
01673  00 3004  1154  ⌐       ⌐3004'
01674  00 6010  1155  ⌐       ⌐6010'
01675  01 2020  1156  ⌐TSIN4N ⌐12020'
01676  00 4012  1157  ⌐       ⌐4012'
01677  01 0023  1160  ⌐       ⌐10023'

01700  00 0044  1161  ⌐SINZ4N ⌐44'⌐GAIN FACTØR ØF 4.5 SEC SINE
01701  00 0000  1162  ⌐ELNPSN ⌐0'⌐ELEV PØSITIØN CØMMANDS
01702  12 2236  1163  ⌐       ⌐ENTAL'ERØFTN
01703  44 2237  1164  ⌐       ⌐STRAL'ERØFTN+1
01704  50 7201  1165  ⌐       ⌐ENTICR'1
01705  12 1241  1166  ⌐       ⌐ENTAL'ECNWDN
01706  52 1245  1167  ⌐       ⌐SLCL'MASKN
01707  44 0001  1170  ⌐       ⌐STRAL'1

01710  70 0014  1171  ⌐       ⌐ENTALN'12D
01711  16 0001  1172  ⌐       ⌐SUBAL'1
01712  67 1714  1173  ⌐       ⌐JPALNG'EØSWN+1
01713  35 1714  1174  ⌐EØSWN  ⌐JPB'EØSWN+1
01714  34 1730  1175  ⌐       ⌐JP'EPSZRN⌐JUMPS TØ ZERØ CØMMAND
01715  34 1732  1176  ⌐       ⌐JP'EDEGSN⌐1 DEG STEP
01716  34 1735  1177  ⌐       ⌐JP'EFDGSN⌐10 DEG STEP
01717  34 1740  1200  ⌐       ⌐JP'EFRDSN⌐45 DEG STEP

01720  34 1743  1201  ⌐       ⌐JP'ESDGSN⌐60 DEG STEP
01721  34 1746  1202  ⌐       ⌐JP'ESQWN⌐45 DEG SQUARE WAVE
01722  34 1770  1203  ⌐       ⌐JP'EFDGRN⌐5 DEG/SEC RAMP
01723  34 2033  1204  ⌐       ⌐JP'ETWRPN⌐15 DEG/SEC RAMP
01724  34 2074  1205  ⌐       ⌐JP'ESPRPN⌐20 STEP,15 RAMP
01725  34 2115  1206  ⌐       ⌐JP'ESAWN⌐SAWTØØTH
01726  34 2141  1207  ⌐       ⌐JP'ESINEN⌐SINE WAVE,20/9
01727  34 2166  1210  ⌐       ⌐JP'ESIN4N⌐SINE WAVE,5/4.5

01730  40 2236  1211  ⌐EPSZRN ⌐CL'ERØFTN⌐ZERØS PØSITIØN CØMMAND
01731  34 2212  1212  ⌐       ⌐JP'EADDN
01732  12 2262  1213  ⌐EDEGSN ⌐ENTAL'NØNEN⌐1 DEG STEP
01733  44 2236  1214  ⌐       ⌐STRAL'ERØFTN
01734  34 2212  1215  ⌐       ⌐JP'EADDN
01735  12 2264  1216  ⌐EFDGSN ⌐ENTAL'NTENN⌐10 DEG STEP
01736  44 2236  1217  ⌐       ⌐STRAL'ERØFTN
01737  34 2212  1220  ⌐       ⌐JP'EADDN
```

TABLE 3-5. (Continued)

```
01740  12 2270  1221  □EFRDSN □ENTAL'N45N□45 DEG STEP
01741  44 2236  1222  □       □STRAL'ERØFTN
01742  34 2212  1223  □       □JP'EADDN
01743  12 2271  1224  □ESDGSN □ENTAL'N60N□60 DEG STEP
01744  44 2236  1225  □       □STRAL'ERØFTN
01745  34 2212  1226  □       □JP'EADDN
01746  70 0012  1227  □ESQWN  □ENTALK'10D□SQUARE WAVE
01747  24 0620  1230  □       □MULAL'VARCØN

01750  44 2242  1231  □       □STRAL'ESQWCN
01751  50 4201  1232  □       □RSHAL'1
01752  44 2243  1233  □       □STRAL'ESQWCN+1
01753  57 2240  1234  □ESTPUN □ISK'ESQWIN
01754  34 1756  1235  □       □JP'ENTVEN
01755  34 1765  1236  □       □JP'ESTRN
01756  12 2270  1237  □ENTVEN □ENTAL'N45N
01757  44 2236  1240  □       □STRAL'ERØFTN

01760  12 2243  1241  □       □ENTAL'ESQWCN+1
01761  16 2240  1242  □       □SUBAL'ESQWIN
01762  67 1764  1243  □       □JPALNG'EXEN
01763  40 2236  1244  □       □CL'ERØFTN
01764  34 2212  1245  □EXEN   □JP'EADDN
01765  12 2242  1246  □ESTRN  □ENTAL'ESQWCN
01766  44 2240  1247  □       □STRAL'ESQWIN
01767  34 1753  1250  □       □JP'ESTPUN

01770  12 2245  1251  □EFDGRN □ENTAL'DELTEN□5 DEG/SEC RAMP
01771  63 2003  1252  □       □JPALNZ'ECYCLN
01772  70 0017  1253  □       □ENTALK'15D
01773  24 0620  1254  □       □MULAL'VARCØN
01774  44 2244  1255  □       □STRAL'ESQWCN+2□15 SEC
01775  50 4201  1256  □       □RSHAL'1
01776  14 2244  1257  □       □ADDAL'ESQWCN+2
01777  44 2243  1260  □       □STRAL'ESQWCN+1□22.5 SEC

02000  14 2244  1261  □       □ADDAL'ESQWCN+2
02001  44 2242  1262  □       □STRAL'ESQWCN□37.5 SEC
02002  34 2004  1263  □       □JP'LØK+2
02003  57 2242  1264  □ECYCLN □ISK'ESQWCN
02004  34 2006  1265  □       □JP'EGNRPN
02005  34 2031  1266  □       □JP'ERAMPN
02006  12 2263  1267  □EGNRPN □ENTAL'NFIVEN
02007  24 1667  1270  □       □MULAL'WØN
```

TABLE 3-5. (Continued)

```
02010  26 0620  1271  □        □DIVA'VARCØN
02011  44 2245  1272  □        □STRAL'DELTEN
02012  14 2236  1273  □        □ADDAL'ERØFTN
02013  44 2236  1274  □        □STRAL'ERØFTN
02014  12 2243  1275  □        □ENTAL'ESQWCN+1
02015  16 2242  1276  □        □SUBAL'ESQWCN
02016  67 2212  1277  □        □JPALNG'EADDN
02017  12 2236  1300  □EVELN   □ENTAL'ERØFTN

02020  16 2245  1301  □        □SUBAL'DELTEN
02021  44 2236  1302  □        □STRAL'ERØFTN
02022  12 2244  1303  □        □ENTAL'ESQWCN+2
02023  16 2242  1304  □        □SUBAL'ESQWCN
02024  67 2212  1305  □        □JPALNG'EADDN
02025  12 2236  1306  □EDWNRN  □ENTAL'ERØFTN
02026  16 2245  1307  □        □SUBAL'DELTEN
02027  65 2031  1310  □        □JPALP'ERAMPN

02030  34 1733  1311  □        □JP'EDEGSN+1
02031  40 2236  1312  □ERAMPN  □CL'ERØFTN
02032  34 2212  1313  □        □JP'EADDN
02033  12 2245  1314  □ETWRPN  □ENTAL'DELTEN□15 DEG/SEC RAMP
02034  63 2046  1315  □        □JPALNZ'ECYCIN
02035  70 0004  1316  □        □ENTALA'4
02036  24 0620  1317  □        □MULAL'VARCØN
02037  44 2244  1320  □        □STRAL'ESQWCN+2□4 SEC

02040  50 4201  1321  □        □RSHAL'1
02041  14 2244  1322  □        □ADDAL'ESQWCN+2
02042  44 2243  1323  □        □STRAL'ESQWCN+1□6 SEC
02043  14 2244  1324  □        □ADDAL'ESQWCN+2
02044  44 2242  1325  □        □STRAL'ESQWCN□10 SEC
02045  34 2047  1326  □        □JP'LØK+2
02046  57 2242  1327  □ECYCIN  □ISK'ESQWCN
02047  34 2051  1330  □        □JP'GENRIN

02050  34 2031  1331  □        □JP'ERAMPN
02051  12 2265  1332  □GENRIN  □ENTAL'N15N
02052  24 1667  1333  □        □MULAL'WØN
02053  26 0620  1334  □        □DIVA'VARCØN
02054  44 2245  1335  □        □STRAL'DELTEN
02055  14 2236  1336  □        □ADDAL'ERØFTN
02056  44 2236  1337  □        □STRAL'ERØFTN
02057  12 2243  1340  □        □ENTAL'ESQWCN+1
```

TABLE 3-5. (Continued)

```
02060  16 2242  1341  □        □SUBAL'ESQWCN
02061  67 2212  1342  □        □JPALNG'EADDN
02062  12 2236  1343  □LEVLIN  □ENTAL'ERØFTN
02063  16 2245  1344  □        □SUBAL'DELTEN
02064  44 2236  1345  □        □STRAL'ERØFTN
02065  12 2244  1346  □        □ENTAL'ESQWCN+2
02066  16 2242  1347  □        □SUBAL'ESQWCN
02067  67 2212  1350  □        □JPALNG'EADDN

02070  12 2236  1351  □EDWRIN  □ENTAL'ERØFTN
02071  16 2245  1352  □        □SUBAL'DELTEN
02072  65 2031  1353  □        □JPALP'ERAMPN
02073  34 1733  1354  □        □JP'EDEGSN+1
02074  12 2245  1355  □ESPRPN  □ENTAL'DELTEN□STEP + RAMP
02075  63 2103  1356  □        □JPALNZ'ECYC2N
02076  70 0003  1357  □        □ENTALK'3
02077  24 0620  1360  □        □MULAL'VARCØN

02100  44 2242  1361  □        □STRAL'ESQWCN
02101  12 2266  1362  □        □ENTAL'N2ØN
02102  44 2236  1363  □        □STRAL'ERØFTN
02103  57 2242  1364  □ECYC2N  □ISK'ESQWCN
02104  34 2106  1365  □        □JP'GENR2N
02105  34 2212  1366  □        □JP'EADDN
02106  12 2265  1367  □GENR2N  □ENTAL'N15N
02107  24 1667  1370  □        □MULAL'WØN

02110  26 0620  1371  □        □DIVA'VARCØN
02111  44 2245  1372  □        □STRAL'DELTEN
02112  14 2236  1373  □        □ADDAL'ERØFTN
02113  44 2236  1374  □        □STRAL'ERØFTN
02114  34 2212  1375  □        □JP'EADDN
02115  12 2245  1376  □ESAWN   □ENTAL'DELTEN□SAWTØØTH
02116  63 2124  1377  □        □JPALNZ'ECYC3N
02117  70 0004  1400  □        □ENTALK'4

02120  24 0620  1401  □        □MULAL'VARCØN
02121  44 2242  1402  □        □STRAL'ESQWCN
02122  12 2271  1403  □        □ENTAL'N6ØN
02123  44 2236  1404  □        □STRAL'ERØFTN
02124  57 2242  1405  □ECYC3N  □ISK'ESQWCN
02125  34 2127  1406  □        □JP'GENR3N
02126  34 2137  1407  □        □JP'CLERPN
02127  12 2265  1410  □GENR3N  □ENTAL'N15N
```

TABLE 3-5. (Continued)

```
02130  24 1667  1411  □        □MULAL'WØN
02131  26 0620  1412  □        □DIVA'VARCØN
02132  50 6100  1413  □        □CPAL'
02133  44 2245  1414  □        □STRAL'DELTEN
02134  14 2236  1415  □        □ADDAL'ERØFTN
02135  44 2236  1416  □        □STRAL'ERØFTN
02136  34 2212  1417  □        □JP'EADDN
02137  40 2245  1420  □CLERPN  □CL'DELTEN

02140  34 2212  1421  □        □JP'EADDN
02141  12 2246  1422  □ESINEN  □ENTAL'EKØNEN□20/9 SINE
02142  63 2147  1423  □        □JPALNZ'ECYC5N
02143  36 0002  1424  □        □MØVE'3'ESIN3N'EKØNEN
02144  11 2252
02145  47 2246
02146  73 2144
02147  12 2246  1425  □ECYC5N  □ENTAL'EKØNEN

02150  24 2247  1426  □        □MULAL'ESIN1N
02151  50 4324  1427  □        □RSHA'20D
02152  50 6100  1430  □        □CPAL'
02153  14 2247  1431  □        □ADDAL'ESIN1N
02154  16 2250  1432  □        □SUBAL'ESIN2N
02155  14 2247  1433  □        □ADDAL'ESIN1N
02156  10 2247  1434  □        □ENTAU'ESIN1N
02157  46 2250  1435  □        □STRAU'ESIN2N

02160  44 2247  1436  □        □STRAL'ESIN1N
02161  24 2255  1437  □        □MULAL'ESIN2N
02162  50 4311  1440  □        □RSHA'9D
02163  14 2267  1441  □        □ADDAL'N3ØN
02164  44 2236  1442  □        □STRAL'ERØFTN
02165  34 2212  1443  □        □JP'EADDN
02166  12 2246  1444  □ESIN4N  □ENTAL'EKØNEN□5/4.5 SINE
02167  63 2174  1445  □        □JPALNZ'ECYC6N

02170  36 0002  1446  □        □MØVE'3'ESIN5N'EKØNEN
02171  11 2256
02172  47 2246
02173  73 2171
02174  12 2246  1447  □ECYC6N  □ENTAL'EKØNEN
02175  24 2247  1450  □        □MULAL'ESIN1N
02176  50 4324  1451  □        □RSHA'20D
02177  50 6100  1452  □        □CPAL'
```

TABLE 3-5. (Continued)

```
02200  14 2247  1453  □        □ADDAL'ESININ
02201  16 2250  1454  □        □SUBAL'ESIN2N
02202  14 2247  1455  □        □ADDAL'ESININ
02203  10 2247  1456  □        □ENTAU'ESININ
02204  46 2250  1457  □        □STRAU'ESIN2N
02205  44 2247  1460  □        □STRAL'ESININ
02206  24 2261  1461  □        □MULAL'ESIN6N
02207  50 4311  1462  □        □RSHA'9D

02210  14 2266  1463  □        □ADDAL'N20N
02211  44 2236  1464  □        □STRAL'ERØFTN
02212  12 1247  1465  □EADDN   □ENTAL'CØNWDN
02213  52 1246  1466  □        □SLCL'MASKIN
02214  10 1666  1467  □        □ENTAU'ZRØN
02215  50 4706  1470  □        □LSHA'6
02216  60 2231  1471  □        □JPAUZ'EFINSN
02217  57 2251  1472  □        □ISK'ENCØUN

02220  34 2222  1473  □        □JP'ENSVLN
02221  76 2232  1474  □        □RJP'ESETN
02222  70 5162  1475  □ENSVLN  □ENTALK'NTABN
02223  14 2251  1476  □        □ADDAL'ENCØUN
02224  74 2225  1477  □        □STRADR'ENVALN
02225  12 0000  1500  □ENVALN  □ENTAL'0
02226  50 4202  1501  □ENØSTI  □RSHAL'2
02227  14 2236  1502  □        □ADDAL'ERØFTN

02230  44 2236  1503  □        □STRAL'ERØFTN
02231  55 1701  1504  □EFINSN  □IJP'ELNPSN
02232  00 0000  1505  □ESETN   □0'
02233  70 1750  1506  □        □ENTALK'1000D
02234  44 2251  1507  □        □STRAL'ENCØUN
02235  55 2232  1510  □        □IJP'ESETN
02236  00 0000  1511  □ERØFTN  □0'
02237  00 0000  1512  □        □0'

02240  00 0000  1513  □ESQWIN  □0'
02241  00 0000  1514  □        □0'
02242  00 0000  1515  □ESQWCN  □0'
02243  00 0000  1516  □        □0'
02244  00 0000  1517  □        □0'
02245  00 0000  1520  □DELTEN  □0'
02246  00 0000  1521  □EKØNEN  □0'
02247  00 0000  1522  □ESININ  □0'
```

TABLE 3-5. (Continued)

```
02250  00 0000   1523  □ESIN2N  □0'
02251  00 1750   1524  □ENCOUN  □10000'
02252  00 2404   1525  □ESIN3N  □2404'
02253  00 4012   1526  □        □4012'
02254  01 0023   1527  □        □10023'
02255  00 0026   1530  □ESIN2N  □26'
02256  01 2020   1531  □ESIN5N  □12020'
02257  00 4012   1532  □        □4012'

02260  01 0023   1533  □        □10023'
02261  00 0014   1534  □ESIN6N  □14'
02262  77 7577   1535  □NCNEN   □777577'
02263  77 6577   1536  □NFIVEN  □776577'
02264  77 5377   1537  □NTENN   □775377'
02265  77 4177   1540  □N15N    □774177'
02266  77 2777   1541  □N20N    □772777'
02267  77 0377   1542  □N30N    □770377'

02270  76 4577   1543  □N45N    □764577'
02271  76 0777   1544  □N60N    □760777'
02272  00 0000   1545  □TRVELN  □0'□□CALCULATE TRAIN VELOCITY COMMAND
02273  12 2315   1546  □        □ENTAL'VTEMPN□SHIFT VELOCITY HISTORY
02274  44 2316   1547  □        □STRAL'VTEMPN+1
02275  12 1644   1550  □        □ENTAL'ROFTN
02276  16 1645   1551  □        □SUBAL'ROFTN□NEW VELOCITY
02277  24 0620   1552  □        □MULAL'VARCON

02300  16 2316   1553  □        □SUBAL'VTEMPN+1□VELOCITY FILTER
02301  50 4202   1554  □VTIMEN  □RSHAL'2□SAMPLE TIME DEPENDENT
02302  14 2316   1555  □        □ADDAL'VTEMPN+1
02303  44 2315   1556  □        □STRAL'VTEMPN
02304  24 2320   1557  □        □MULAL'VSIZEN
02305  50 4316   1560  □        □RSHA'14D
02306  44 2321   1561  □        □STRAL'VELOCN
02307  70 0005   1562  □        □ENTALK'5

02310  16 1243   1563  □        □SUBAL'TCNWDN
02311  65 2313   1564  □        □JPALP'LOK+2
02312  55 2272   1565  □        □IJP'TRVELN
02313  40 2321   1566  □        □CL'VELOCN
02314  55 2272   1567  □        □IJP'TRVELN□EXIT
02315  00 0000   1570  □VTEMPN  □0'
02316  00 0000   1571  □        □0'
02317  00 0000   1572  □VFLAGN  □0'
```

TABLE 3-5. (Continued)

```
02320  00 3400  1573  □VSIZEN  □3400
02321  00 0000  1574  □VELØCN  □0'□FILTERED VELØCITY
02322  00 0000  1575  □ELVELN  □0'□CALCULATES ELEV VEL CØMMAND
02323  12 2345  1576  □        □ENTAL'EVTMPN
02324  44 2346  1577  □        □STRAL'EVTMPN+1
02325  12 2236  1600  □        □ENTAL'ERØFTN
02326  16 2237  1601  □        □SUBAL'ERØFTN+1
02327  24 0620  1602  □        □MULAL'VARCØN

02330  16 2346  1603  □        □SUBAL'EVTMPN+1
02331  50 4202  1604  □ETIMEN  □RSHAL'2
02332  14 2346  1605  □        □ADDAL'EVTMPN+1
02333  44 2345  1606  □        □STRAL'EVTMPN
02334  24 2350  1607  □        □MULAL'ESIZEN
02335  50 4316  1610  □        □RSHA'14D
02336  44 2351  1611  □        □STRAL'EVELCN
02337  70 0005  1612  □        □ENTALK'5

02340  16 1241  1613  □        □SUBAL'ECNWDN
02341  65 2343  1614  □        □JPALP'LØK+2
02342  55 2322  1615  □        □IJP'ELVELN
02343  40 2351  1616  □        □CL'EVELCN
02344  55 2322  1617  □        □IJP'ELVELN
02345  00 0000  1620  □EVTMPN  □0'
02346  00 0000  1621  □        □0'
02347  00 0000  1622  □EFLAGN  □0'

02350  00 4500  1623  □ESIZEN  □4500'
02351  00 0000  1624  □EVELCN  □0'
02352  00 0000  1625  □TRENIN  □0'□TRAIN PØS IN VIA ENCØDER
02353  50 1306  1626  □        □EXFCT'6'AD'1'BEGØN
02354  00 2375
02355  00 2374
02356  50 2706  1627  □        □EXFØV'6
02357  50 1106  1630  □        □BUFIN'6'AD'1'INPØSN

02360  00 2440
02361  00 2440
02362  50 2106  1631  □        □SKPIIN'6
02363  34 2362  1632  □        □JP'LØK-1
02364  12 2440  1633  □        □ENTAL'INPØSN
02365  50 4725  1634  □        □LSHA'21D
02366  50 4306  1635  □        □RSHA'6
02367  26 2372  1636  □        □DIVA'KIN
```

TABLE 3-5. (Continued)

```
02370  44 2373  1637  □        □STRAL'CØFTN
02371  55 2352  1640  □        □IJP'TRENIN
02372  05 5404  1641  □KIN     □55404'
02373  00 0000  1642  □CØFTN   □0'
02374  00 1000  1643  □BEGCN   □1000'
02375  00 0000  1644  □TKSCIN  □0'□TRAIN PØS IN THRU KSC
02376  12 2435  1645  □        □ENTAL'IRPISN
02377  44 0112  1646  □        □STRAL'112

02400  50 1305  1647  □        □EXFCT'5'AD'2'REQCCN
02401  00 2440
02402  00 2436
02403  50 2705  1650  □        □EXFØV'5
02404  34 2404  1651  □WAITIN  □JP'WAITIN
02405  50 3000  1652  □REENTN  □RIL'
02406  12 0113  1653  □        □ENTAL'113
02407  02 2436  1654  □        □CMAL'REQCØN

02410  61 2414  1655  □        □JPEQ'BUFERN
02411  02 2444  1656  □        □CMAL'TWØN
02412  61 2424  1657  □        □JPEQ'ENDIN
02413  50 5640  1660  □        □STØP'
02414  50 1105  1661  □BUFERN  □BUFIN'5'AD'2'INPØSN
02415  00 2441
02416  00 2440
02417  50 1305  1662  □        □EXFCT'5'AD'2'INWDCN

02420  00 2444
02421  00 2442
02422  50 2705  1663  □        □EXFØV'5
02423  34 2423  1664  □        □JP'LØK-0
02424  12 2440  1665  □ENDIN   □ENTAL'INPØSN
02425  50 4202  1666  □        □RSHAL'2
02426  14 2440  1667  □        □ADDAL'INPØSN
02427  02 2445  1670  □        □CMAL'P180N

02430  67 2432  1671  □        □JPMGR'LØK+2
02431  16 2446  1672  □        □SUBAL'P360N
02432  50 6100  1673  □        □CPAL'
02433  44 2373  1674  □        □STRAL'CØFTN
02434  55 2375  1675  □        □IJP'TKSCIN
02435  34 2405  1676  □IRPISN  □JP'REENTN
02436  00 0001  1677  □REQCCN  □000001'
02437  00 0000  1700  □        □0'
```

TABLE 3-5. (Continued)

```
02440  00 0000  1701  □INPØSN □0'
02441  00 0000  1702  □       □0'
02442  10 0400  1703  □INWDCN □100400'
02443  00 1000  1704  □       □001000'
02444  00 0002  1705  □TWØN   □000002'
02445  05 5000  1706  □P18ØN  □23040D'
02446  13 2000  1707  □P36ØN  □46080D'
02447  00 0000  1710  □TRERRN □0'□CALCULATE TRAIN ERRØR

02450  12 1644  1711  □       □ENTAL'RØFTN□NEW PØSITIØN CØMMAND
02451  16 2373  1712  □       □SUBAL'CØFTN□PRESENT TRAIN PØSITIØN
02452  44 2455  1713  □LEXITN □STRAL'AIRN□STØRE ERRØR
02453  44 2456  1714  □       □STRAL'AIRIN
02454  55 2447  1715  □       □IJP'TRERRN□EXIT
02455  00 0000  1716  □AIRN   □0'□LATEST ERRØR
02456  00 0000  1717  □AIRIN  □0'
02457  00 0200  1720  □WØNEN  □128D'□1 SF7

02460  00 0000  1721  □ECTABN □0'□TRAIN ERRØR CURVE TABLE LØØKUP
02461  50 7201  1722  □       □ENTICR'1
02462  36 0000  1723  □       □ENTBK'0□ZERØS B BØX1
02463  12 2455  1724  □       □ENTAL'AIRN
02464  65 2470  1725  □       □JPALP'LØK+4□JUMP IF ERRØR PØITIVE
02465  50 6100  1726  □       □CPAL'□MAKE VALUE ABSØLUTE
02466  44 2514  1727  □       □STRAL'TESTN□FLAG, NEGATIVE NUMBER
02467  34 2471  1730  □       □JP'LØK+2

02470  40 2514  1731  □       □CL'TESTN□FLAG, PØSITIVE NUMBER
02471  44 2515  1732  □       □STRAL'TESTN+1□SAVE ABSØLUTE ERRØR
02472  16 2513  1733  □       □SUBAL'LIMITN
02473  65 2476  1734  □       □JPALP'LØK+3
02474  12 2515  1735  □       □ENTAL'TESTN+1□ABSØLUTE VALUE
02475  34 2477  1736  □       □JP'LØK+2
02476  12 2513  1737  □       □ENTAL'LIMITN□MAXIMUM ERRØR
02477  24 2512  1740  □       □MULAL'TEN□TENTHS ØF DEGREES

02500  50 4307  1741  □       □RSHA'7□REMØVES SF
02501  44 2515  1742  □       □STRAL'TESTN+1□STØRE ERRØR TABLE INDEX
02502  32 2515  1743  □       □ENTB'TESTN+1
02503  13 0321  1744  □       □ENTALB'TETABN
02504  10 2514  1745  □       □ENTAU'TESTN□CHECK SIGN ØF ERRØR
02505  60 2507  1746  □       □JPAUZ'LØK+2□JUMP IF SIGN PØSITIVE
02506  50 6100  1747  □       □CPAL'□NEGATIVE ERRØR
02507  50 4203  1750  □       □RSHAL'3□REDUCE SF7
```

TABLE 3-5. (Continued)

```
02510  44 2533  1751  □        □STRAL'MØFZN□CØNTAINS ØUTPUT
02511  55 2460  1752  □        □IJP'ECTABN
02512  00 0012  1753  □TEN     □1ØD'
02513  01 4363  1754  □LIMITN  □63870'□49.9 DEGREES
02514  00 0000  1755  □TESTN   □0'□SIGN FLAG STØRAGE
02515  00 0000  1756  □        □0'
02516  00 0000  1757  □CØNCØN  □0'□CØMPLETE TRAIN CØNTRØLLER CAL
02517  12 2455  1760  □        □ENTAL'AIRN□PØSITIØN ERRØR E(N)

02520  24 2532  1761  □        □MULAL'STLIN
02521  50 4314  1762  □        □RSHA'12D
02522  44 3004  1763  □        □STRAL'TEHISN□SAVE TRAIN ERRØR HISTØRY
02523  24 2777  1764  □        □MULAL'ACØEFN□A0 TIMES E(N) SF22
02524  50 4310  1765  □        □RSHA'8D□SF 14
02525  14 3011  1766  □        □ADDAL'THISTN+2□PREVIØUS PARTIAL PRØDUCT
02526  44 3007  1767  □        □STRAL'THISTN
02527  50 4207  1770  □        □RSHAL'7
02530  44 2533  1771  □        □STRAL'MØFZN□M(Z) ØUT TØ TRAIN
02531  55 2516  1772  □        □IJP'CØNCØN
02532  00 6443  1773  □STLIN   □33630'□.821 SF12
02533  00 0000  1774  □MØFZN   □0'□M(Z) SF7
02534  00 0000  1775  □TRØUTN  □0'□ØUTPUT TØ TRAIN
02535  12 0622  1776  □        □ENTAL'MZVELN□M(Z) PLUS VELØCITY
02536  24 2555  1777  □        □MULAL'PKN
02537  50 4307  2000  □        □RSHA'7

02540  76 3166  2001  □        □RJP'ATSTN
02541  44 2556  2002  □        □STRAL'BØUTN
02542  50 1306  2003  □        □EXFCT'6'AD'1'TEFN
02543  00 2555
02544  00 2554
02545  50 2706  2004  □        □EXFØV'6
02546  50 1206  2005  □        □BUFØUT'6'AD'1'BØUTN
02547  00 2557

02550  00 2556
02551  50 2206  2006  □        □SKPØIN'6
02552  34 2551  2007  □        □JP'LØK-1
02553  55 2534  2010  □        □IJP'TRØUTN
02554  00 0002  2011  □TEFN    □2'□DA NØ. 2
02555  00 2400  2012  □PKN     □2400'
02556  00 0000  2013  □BØUTN   □0'
02557  00 0000  2014  □ELENIN  □0'□ELEV PØS BUFFERED IN
```

TABLE 3-5. (Continued)

```
02560  50 1306  2015  □        □EXFCT'6'AD'1'ELEFIN
02561  00 2600
02562  00 2577
02563  50 2706  2016  □        □EXFØV'6
02564  50 1106  2017  □        □BUFIN'6'AD'1'ELPØSN
02565  00 2600
02566  00 2600
02567  50 2106  2020  □        □SKPIIN'6

02570  34 2567  2021  □        □JP'LØK-1
02571  12 2600  2022  □        □ENTAL'ELPØSN
02572  50 4725  2023  □        □LSHA'21D
02573  50 4306  2024  □        □RSHA'6
02574  26 2372  2025  □        □DIVA'KIN
02575  44 2602  2026  □        □STRAL'ECØFTN
02576  55 2557  2027  □        □IJP'ELENIN
02577  00 2000  2030  □ELEFIN  □2000'

02600  00 0000  2031  □ELPØSN  □0'
02601  00 0000  2032  □        □0'
02602  00 0000  2033  □ECØFTN  □0'
02603  00 0000  2034  □EKSCIN  □0'□ELEV PØS IN THRU KSC
02604  12 2634  2035  □        □ENTAL'ERPISN
02605  44 0112  2036  □        □STRAL'112
02606  50 1105  2037  □        □BUFIN'5'AD'2'ELPØSN
02607  00 2601

02610  00 2600
02611  50 1305  2040  □        □EXFCT'5'AD'2'ENWDCN
02612  00 2637
02613  00 2635
02614  50 2705  2041  □        □EXFØV'5
02615  34 2614  2042  □        □JP'LØK-1
02616  50 3000  2043  □ERENTN  □RIL'
02617  12 0113  2044  □        □ENTAL'113

02620  02 2444  2045  □        □CMAL'TWØN
02621  61 2623  2046  □        □JPEQ'EEDIN
02622  50 5640  2047  □        □STØP'
02623  12 2600  2050  □EEDIN   □ENTAL'ELPØSN
02624  50 4202  2051  □        □RSHAL'2
02625  14 2600  2052  □        □ADDAL'ELPØSN
02626  02 2445  2053  □        □CMAL'P18ØN
02627  67 2631  2054  □        □JPMGR'LØK+2
```

TABLE 3-5. (Continued)

```
02630  16 2446  2055  □        □SUBAL'P360N
02631  50 6100  2056  □        □CPAL'
02632  44 2602  2057  □        □STRAL'ECØFTN
02633  55 2603  2060  □        □IJP'EKSCIN
02634  34 2616  2061  □ERPISN  □JP'ERENTN
02635  11 0400  2062  □ENWDCN  □110400'
02636  00 1100  2063  □        □001100'
02637  00 0000  2064  □ELERRN  □0'□CALC ERRØR ,ELEV

02640  12 2236  2065  □        □ENTAL'ERØFTN
02641  16 2602  2066  □        □SUBAL'ECØFTN
02642  44 2645  2067  □        □STRAL'EAIRN
02643  44 2646  2070  □        □STRAL'EAIRIN
02644  55 2637  2071  □        □IJP'ELERRN
02645  00 0000  2072  □EAIRN   □0'
02646  00 0000  2073  □EAIRIN  □0'
02647  00 0000  2074  □ELERLN  □0'□ELEV ERRØR CURVE TAB LØØKUP

02650  50 7201  2075  □        □ENTICR'1
02651  36 0000  2076  □        □ENTBK'0
02652  12 2645  2077  □        □ENTAL'EAIRN
02653  65 2657  2100  □        □JPALP'LØK+4
02654  50 6100  2101  □        □CPAL'
02655  44 2701  2102  □        □STRAL'ETESTN
02656  34 2660  2103  □        □JP'LØK+2
02657  40 2701  2104  □        □CL'ETESTN

02660  44 2702  2105  □        □STRAL'ETESTN+1
02661  16 2513  2106  □        □SUBAL'LIMITN
02662  65 2665  2107  □        □JPALP'LØK+3
02663  12 2702  2110  □        □ENTAL'ETESTN+1
02664  34 2666  2111  □        □JP'LØK+2
02665  12 2513  2112  □        □ENTAL'LIMITN
02666  24 2512  2113  □        □MULAL'TEN
02667  50 4307  2114  □        □RSHA'7

02670  44 2702  2115  □        □STRAL'ETESTN+1
02671  32 2702  2116  □        □ENTB'ETESTN+1
02672  13 4175  2117  □        □ENTALB'ELETBN
02673  10 2701  2120  □        □ENTAU'ETESTN
02674  60 2676  2121  □        □JPAUZ'LØK+2
02675  50 6100  2122  □        □CPAL'
02676  50 4203  2123  □        □RSHAL'3
02677  44 2703  2124  □        □STRAL'EMØFZN
```

TABLE 3-5. (Continued)

```
02700  55 2647  2125  □        □IJP'ELERLN
02701  00 0000  2126  □ETESTN  □0'
02702  00 0000  2127  □        □0'
02703  00 0000  2130  □EMØFZN  □0'
02704  00 0000  2131  □CØMCØN  □0'□CØMPLETE ELEV CØNT CALC
02705  12 2645  2132  □        □ENTAL'EAIRN
02706  24 2720  2133  □        □MULAL'ESTLIN
02707  50 4314  2134  □        □RSHA'12D

02710  44 3053  2135  □        □STRAL'EEHISN
02711  24 3046  2136  □        □MULAL'EACØFN
02712  50 4310  2137  □        □RSHA'8D
02713  14 3060  2140  □        □ADDAL'EHISTN+2
02714  44 3056  2141  □        □STRAL'EHISTN
02715  50 4207  2142  □        □RSHAL'7
02716  44 2703  2143  □        □STRAL'EMØFZN
02717  55 2704  2144  □        □IJP'CØMCØN

02720  00 6443  2145  □ESTLIN  □6443'
02721  00 0000  2146  □ELØUTN  □0'□ELEV OUTPUT TØ LAUNCHER
02722  12 0625  2147  □        □ENTAL'EMZVLN
02723  24 2555  2150  □        □MULAL'PKN
02724  50 4307  2151  □        □RSHA'7
02725  76 3166  2152  □        □RJP'ATSTN
02726  44 2741  2153  □        □STRAL'EBØUTN
02727  50 1306  2154  □        □EXFCT'6'AD'1'ELEFN

02730  00 2743
02731  00 2742
02732  50 2706  2155  □        □EXFØV'6
02733  50 1206  2156  □        □BUFØUT'6'AD'1'EBØUTN
02734  00 2742
02735  00 2741
02736  50 2206  2157  □        □SKPØIN'6
02737  34 2736  2160  □        □JP'LØK-1

02740  55 2721  2161  □        □IJP'ELØUTN
02741  00 0000  2162  □EBØUTN  □0'
02742  00 0104  2163  □ELEFN   □4'□DA NØ 3
02743  00 0000  2164  □TRPDZN  □0'□CALCULATE TRAIN D(Z) FØR NEXT PASS
02744  12 3005  2165  □        □ENTAL'TEHISN+1
02745  44 3006  2166  □        □STRAL'TEHISN+2
02746  12 3004  2167  □        □ENTAL'TEHISN
02747  44 3005  2170  □        □STRAL'TEHISN+1
```

TABLE 3-5. (Continued)

```
02750  24 3000  2171  □        □MULAL'AC0EFN+1□A1 TIMES E(N-1)
02751  50 4310  2172  □        □RSHA'8D
02752  44 3011  2173  □        □STRAL'THISTN+2
02753  12 3006  2174  □        □ENTAL'TEHISN+2
02754  24 3001  2175  □        □MULAL'AC0EFN+2
02755  50 4310  2176  □        □RSHA'8D
02756  14 3011  2177  □        □ADDAL'THISTN+2
02757  44 3011  2200  □        □STRAL'THISTN+2

02760  12 3007  2201  □        □ENTAL'THISTN
02761  24 3002  2202  □        □MULAL'BC0EFN□B1 TIMES M(Z)
02762  50 4317  2203  □        □RSHA'15D
02763  50 6100  2204  □        □CPAL'
02764  14 3011  2205  □        □ADDAL'THISTN+2
02765  44 3011  2206  □        □STRAL'THISTN+2
02766  12 3010  2207  □        □ENTAL'THISTN+1
02767  24 3003  2210  □        □MULAL'BC0EFN+1

02770  50 4317  2211  □        □RSHA'15D
02771  50 6100  2212  □        □CPAL'
02772  14 3011  2213  □        □ADDAL'THISTN+2
02773  44 3011  2214  □        □STRAL'THISTN+2
02774  12 3007  2215  □        □ENTAL'THISTN
02775  44 3010  2216  □        □STRAL'THISTN+1
02776  55 2743  2217  □        □IJP'TRPDZN
02777  10 0000  2220  □AC0EFN  □100000'□A0 SF 15

03000  61 4642  2221  □        □614642'□A1 SF 15
03001  06 3636  2222  □        □063636'□A2 SF 15
03002  60 3115  2223  □BC0EFN  □603115'□B1 SF 15
03003  07 4702  2224  □        □074702'□B2 SF 15
03004  00 0000  2225  □TEHISN  □0'
03005  00 0000  2226  □        □0'□SF 7
03006  00 0000  2227  □        □0'□SF 7
03007  00 0000  2230  □THISTN  □0'

03010  00 0000  2231  □        □0'□SF 14
03011  00 0000  2232  □        □0'□WORKING CELL
03012  00 0000  2233  □ELPDZN  □0'□ELEV D(Z) FOR NEXT PASS
03013  12 3054  2234  □        □ENTAL'EEHISN+1
03014  44 3055  2235  □        □STRAL'EEHISN+2
03015  12 3053  2236  □        □ENTAL'EEHISN
03016  44 3054  2237  □        □STRAL'EEHISN+1
03017  24 3047  2240  □        □MULAL'EAC0FN+1
```

TABLE 3-5. (Continued)

```
03020  50 4310  2241  □        □RSHA'8D
03021  44 3060  2242  □        □STRAL'EHISTN+2
03022  12 3055  2243  □        □ENTAL'EEHISN+2
03023  24 3050  2244  □        □MULAL'EACØFN+2
03024  50 4310  2245  □        □RSHA'8D
03025  14 3060  2246  □        □ADDAL'EHISTN+2
03026  44 3060  2247  □        □STRAL'EHISTN+2
03027  12 3056  2250  □        □ENTAL'EHISTN

03030  24 3051  2251  □        □MULAL'EBCØFN
03031  50 4317  2252  □        □RSHA'15D
03032  50 6100  2253  □        □CPAL'
03033  14 3060  2254  □        □ADDAL'EHISTN+2
03034  44 3060  2255  □        □STRAL'EHISTN+2
03035  12 3057  2256  □        □ENTAL'EHISTN+1
03036  24 3052  2257  □        □MULAL'EBCØFN+1
03037  50 4317  2260  □        □RSHA'15D

03040  50 6100  2261  □        □CPAL'
03041  14 3060  2262  □        □ADDAL'EHISTN+2
03042  44 3060  2263  □        □STRAL'EHISTN+2
03043  12 3056  2264  □        □ENTAL'EHISTN
03044  44 3057  2265  □        □STRAL'EHISTN+1
03045  55 3012  2266  □        □IJP'ELPDZN
03046  10 0000  2267  □EACØF'   □100000'
03047  61 4642  2270  □        □614642'

03050  06 3636  2271  □        □063636'
03051  60 3115  2272  □EBCØFN  □603115'
03052  07 4702  2273  □        □074702'
03053  00 0000  2274  □EEHISN  □0'
03054  00 0000  2275  □        □0'
03055  00 0000  2276  □        □0'
03056  00 0000  2277  □EHISTN  □0'
03057  00 0000  2300  □        □0'

03060  00 0000  2301  □        □0'
03061  00 0000  2302  □DATRDN  □0'□DATA TØ BRUSH RECØRDER
03062  12 1644  2303  □        □ENTAL'RØFTN
03063  24 3153  2304  □        □MULAL'AKIN
03064  50 4306  2305  □        □RSHA'6
03065  76 3166  2306  □        □RJP'ATSTN
03066  44 3156  2307  □        □STRAL'AØUTN+1
03067  50 1306  2310  □        □EXFCT'6'AD'1'REFN
```

TABLE 3-5. (Continued)

```
03070  00 3163
03071  00 3162
03072  50 2706  2311  □      □EXFØV'6
03073  50 1206  2312  □      □BUFØUT'6'AD'1'AØUTN+1
03074  00 3157
03075  00 3156
03076  50 2206  2313  □      □SKPØIN'6
03077  34 3076  2314  □      □JP'LØK-1

03100  12 2456  2315  □      □ENTAL'AIRIN
03101  24 3154  2316  □      □MULAL'AK2N
03102  50 4303  2317  □      □RSHA'3
03103  76 3166  2320  □      □RJP'ATSTN
03104  44 3157  2321  □      □STRAL'AØUTN+2
03105  50 1306  2322  □      □EXFCT'6'AD'1'AIREFN
03106  00 3164
03107  00 3163

03110  50 2706  2323  □      □EXFØV'6
03111  50 1206  2324  □      □BUFØUT'6'AD'1'AØUTN+2
03112  00 3160
03113  00 3157
03114  50 2206  2325  □      □SKPØIN'6
03115  34 3114  2326  □      □JP'LØK-1
03116  12 2236  2327  □      □ENTAL'EREFTN
03117  24 3153  2330  □      □MULAL'AK1N

03120  50 4306  2331  □      □RSHA'6
03121  76 3166  2332  □      □RJP'ATSTN
03122  44 3160  2333  □      □STRAL'AØUTN+3
03123  50 1306  2334  □      □EXFCT'6'AD'1'EREFN
03124  00 3165
03125  00 3164
03126  50 2706  2335  □      □EXFØV'6
03127  50 1206  2336  □      □BUFØUT'6'AD'1'AØUTN+3

03130  00 3161
03131  00 3160
03132  50 2206  2337  □      □SKPØIN'6
03133  34 3132  2340  □      □JP'LØK-1
03134  12 2646  2341  □      □ENTAL'EAIRIN
03135  24 3154  2342  □      □MULAL'AK2N
03136  50 4303  2343  □      □RSHA'3
03137  76 3166  2344  □      □RJP'ATSTN
```

TABLE 3-5. (Continued)

```
03140  44 3161  2345  □        □STRAL'AØUTN+4
03141  50 1306  2346  □        □EXFCT'6'AD'1'EAREFN
03142  00 3166
03143  00 3165
03144  50 2706  2347  □        □EXFØV'6
03145  50 1206  2350  □        □BUFØUT'6'AD'1'AØUTN+4
03146  00 3162
03147  00 3161

03150  50 2206  2351  □        □SKPØIN'6
03151  34 3150  2352  □        □JP'LØK-1
03152  55 3061  2353  □        □IJP'DATRDN
03153  00 0045  2354  □AK1N    □45'
03154  00 0062  2355  □AK2N    □62'
03155  00 0000  2356  □AØUTN   □0'
03156  00 0000  2357  □        □0'
03157  00 0000  2360  □        □0'

03160  00 0000  2361  □        □0'
03161  00 0000  2362  □        □0'
03162  00 0001  2363  □REFN    □1'□DA NØ. 1
03163  00 0010  2364  □AIREFN  □10'□DA NØ. 4
03164  00 0020  2365  □EREFN   □20'□DA NØ. 5
03165  00 0040  2366  □EAREFN  □40'□DA NØ. 6
03166  00 0000  2367  □ATSTN   □0'□ØVERFLØW SUBRØUTINE
03167  65 3173  2370  □        □JPALP'LØK+4

03170  50 6100  2371  □        □CPAL'
03171  44 3206  2372  □        □STRAL'AFLGN
03172  34 3174  2373  □        □JP'LØK+2
03173  40 3206  2374  □        □CL'AFLGN
03174  02 3205  2375  □        □CMAL'AKØN
03175  65 3203  2376  □        □JPMLEQ'LØK+6
03176  10 3206  2377  □        □ENTAU'AFLGN
03177  62 3201  2400  □        □JPAUNZ'LØK+2

03200  55 3166  2401  □        □IJP'ATSTN
03201  50 6100  2402  □        □CPAL'
03202  55 3166  2403  □        □IJP'ATSTN
03203  12 3205  2404  □        □ENTAL'AKØN
03204  34 3176  2405  □        □JP'LØK-6
03205  01 4400  2406  □AKØN    □14400'
03206  00 0000  2407  □AFLGN   □0'
00321  00 0000  2410  □TETABN  □0'□TRAIN ERRØR CURVE TABLE
04175  00 0000  2411  □ELETBN  □0'□ELEV ERRØR CURVE TABLE
05162  00-0000  2412  □NTABN   □0'□NØISE TABLE
..
31 3676
.
```

PART 4

COMPUTER PROGRAM OPERATOR'S MANUAL

REVERSE SIDE BLANK

CONTENTS

1.0 SCOPE . . . *131*

2.0 OPERATIONAL ENVIRONMENT . . . *131*
- 2.1 Equipment Requirements . . . *131, 132*
- 2.2 Computer Program Materials . . . *134*
- 2.3 Supporting Documentation . . . *134*
- 2.4 Personnel Requirements . . . *134*

3.0 PRE-STANDBY PROCEDURES . . . *134*
- 3.1 Equipment Setup . . . *135*
- 3.2 Computer Program Setup . . . *135*

4.0 STANDBY/OPERATE PROCEDURES . . . *135, 136*

5.0 MONITORING PROCEDURES . . . *140*

6.0 RECOVERY PROCEDURES . . . *140*

7.0 MAINTENANCE PROCEDURES . . . *140*

ILLUSTRATIONS

4-1 Configuration, block diagram . . . *133*
4-2 Mode Selector Control Panel . . . *137*
4-3 Command Selector Control Panel . . . *137*

TABLES

4-1 Train position command switch settings . . . *138*
4-2 Elevation position command switch settings . . . *139*

1.0 SCOPE

Part 4 contains complete instructions for the operation of the computer program described in Part 2, Computer Program Performance Specification, and Part 3, Computer Program Design Specification. The procedures given presume a basic knowledge of the UNIVAC Type 1218 (CP 789) Digital Computer and familiarity with its operating controls. The program was designed for feasibility demonstration of both train and elevation. Operating procedures are identical for both since the program is run as a continuous entity.

2.0 OPERATIONAL ENVIRONMENT

The following paragraphs describe the requirements for computer program operation in terms of equipment, program materials, and personnel.

2.1 Equipment Requirements

Computer and Peripheral

a. 1 Digital Computer, Model CP 789 (UNIVAC Type 1218).
b. 1 Paper Tape Unit, Model 1232 I/O Console.

Supporting

c. 1 Digital Data Converter, Model CV1123/USQ-20 (V).
d. 6 Digital-to-Analog Converters, Packard-Bell Model DA6.
e. 2 Operational Amplifiers, Zeltex Model 142C.
f. 1 4-Channel Strip Recorder, Brush Model Mk 200.
g. 1 Command Selector Control Panel, NELC Prototype.
h. 1 Logic Chassis, NELC Prototype.
i. 2 Special Switch Boxes, NELC Prototype.

j. 2 Shaft-to-Digital Encoders, Datex Model 12-300-27.
k. 1 Special Mode Selector Control Panel, NELC Prototype.
l. 4 Power Supplies, Sorensen Model Q Nobatron QRC 20-8A.

The complete feasibility of demonstration equipment setup is shown in block-diagram form for train in figure 4-1. A similar configuration is used for elevation

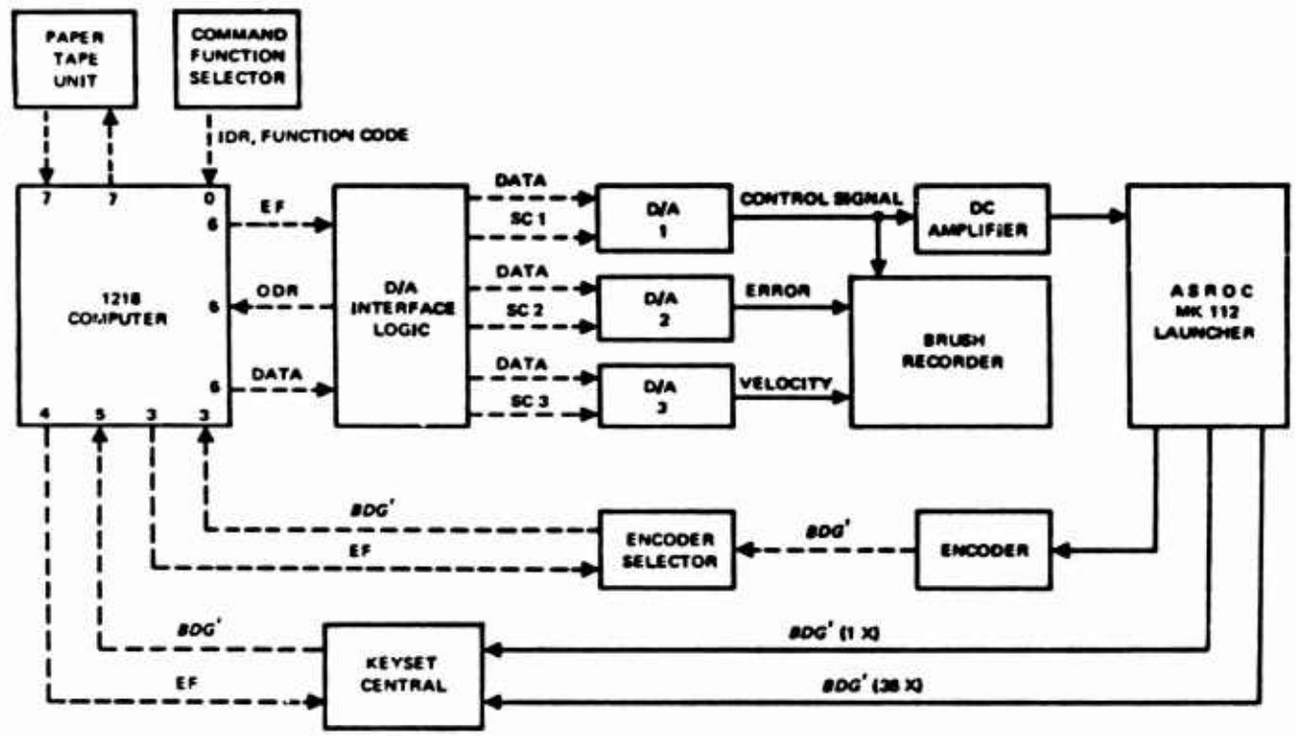

Figure 4-1. Configuration, block diagram.

2.2 Computer Program Materials

The following program paper tapes are required for operation of the launcher test program:

a. ASROC Test Program (Paper Tape, Bioctal)
b. "UPAK 1B" Utility Program (Paper Tape, Bioctal)

2.3 Supporting Documentation

Assuming a familiarity with the Type 1218 digital computer, the only supporting documentation necessary for program operation is Part 3, Computer Program Design Specification. The design specification contains a printed output listing and detailed information concerning all functions of the computer program.

2.4 Personnel Requirements

Program operation requires a minimum of two people: (1) the system operator, who is responsible for the operation of the computer, the Command Selector Control Panel, and the Mode Selector Control Panel; and (2) the launcher operator, who is stationed at the launcher controls and performs, as required, the switchover between the continuous analog control and the digital computer control system.

3.0 PRE-STANDBY PROCEDURES

Assuming power ON, and that all launcher and supporting equipment is properly connected and aligned, the computer operator will follow the procedures described in the next paragraphs.

3.1 Equipment Setup

The computer operator has no responsibilities with regard to equipment setup. The equipment setup and the power requirements for computer operation are the responsibilities of assigned electronic technicians.

3.2 Computer Program Setup

The following procedures are necessary prior to program initialization:

a. Using the computer bootstrap and the automatic-load routine on the UPAK 1B tape, load UPAK 1B into the computer via the 1232 tape reader.

b. Manually clear the computer via the MASTER CLEAR switch on the computer panel and enter 26006 octal into the P register.

c. Place the ASROC test program tape in the 1232 tape reader and depress the computer RESTART switch, thus loading the ASROC test program.

d. Using the inspect and change feature of UPAK 1B, insert into the memory the sampling-rate controller coefficients and the sine-wave parameters appropriate to the given test run.

4.0 STANDBY/OPERATE PROCEDURES

With all program setup steps completed the program initialization and execution are performed as follows:

a. Depress the MASTER CLEAR switch on the computer panel and enter the 500 octal, the program initial address, in the P register.

b. Depress the RESTART switch on the computer panel.

c. Set the SYNCH (synchronizing interrupt) switch on the computer panel to ON.

d. If encoder input is desired, set Skip Key 2 on the computer panel. If synchro input through KSC is desired, do not set Skip Key 2.

e. Set all switches on the Command Selector Control Panel (fig. 4-2) to the OFF position and depress the input data request pushbutton.

f. Set the mode select switches on the Mode Selector Control Panel (fig. 4-3) to DIGITAL.

g. Depress the RESTART switch on the computer panel to begin program operation.

h. Request the launcher operator to switch to digital control.

i. Exercise the launcher in various control functions by entering appropriate switch settings at Command Selector Control Panel, in accordance with the schedule shown in tables 4-1 and 4-2.

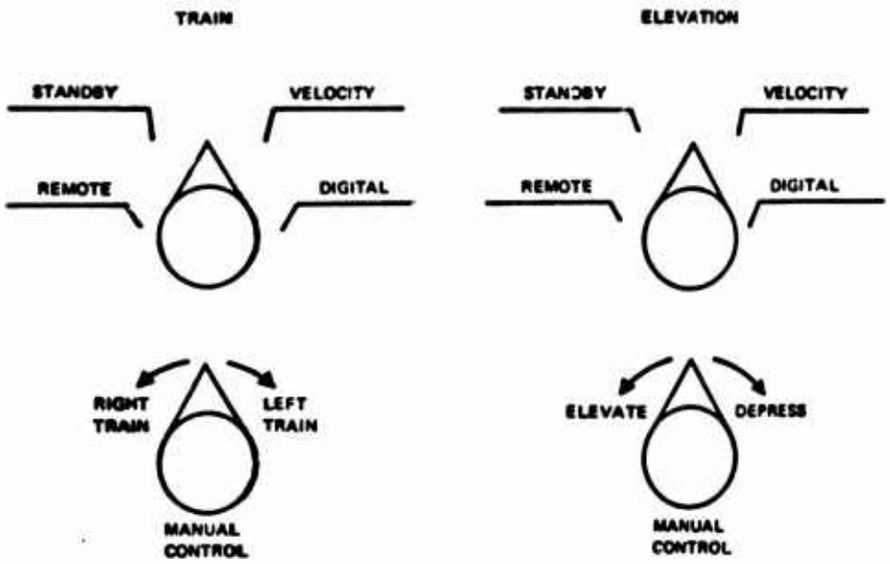

Figure 4-2. Mode Selector Control Panel

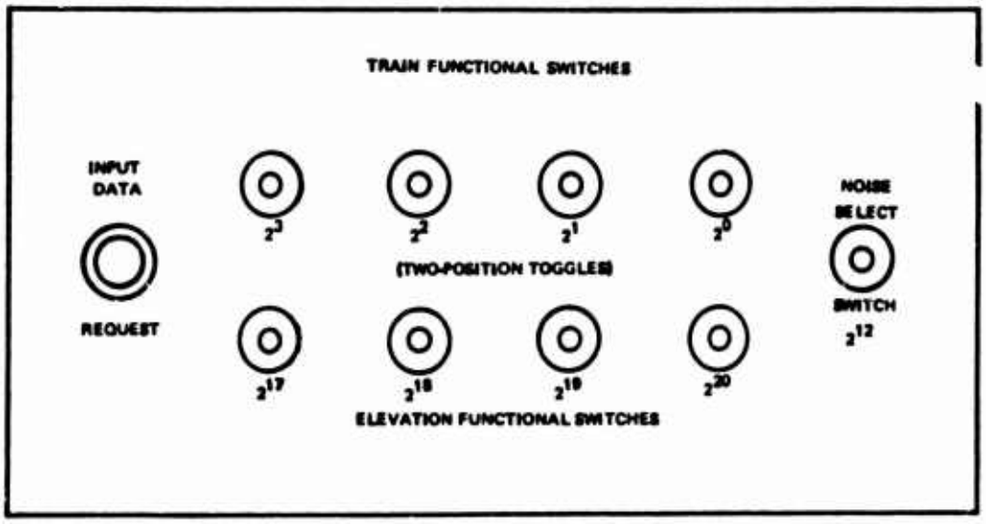

Figure 4-3. Command Selector Control Panel

TABLE 4-1. TRAIN POSITION COMMAND SWITCH SETTINGS

Function	Binary code	Control panel switch setting (function)
Generate zero position command	0000	None
1-degree step	0001	1
10-degree step	0010	2
45-degree step	0011	1, 2
90-degree step	0100	3
75-degree square wave	0101	1, 3
5-deg/sec ramp	0110	2, 3
20-deg/sec ramp	0111	1, 2, 3
30-deg/sec ramp	1000	4
30-deg step, plus 15-deg/sec ramp to 90 degrees	1001	1, 4
60-deg step, minus 20 deg/sec to -60 degrees	1010	2, 4
30-deg amplitude, 9-second period sine wave	1011	1, 2, 4
17.5-deg amplitude, 4.5-second period sine wave	1100	3, 4

TABLE 4-2. ELEVATION POSITION COMMAND SWITCH SETTINGS

Function	Binary code	Control Panel switch setting (function)
Generate zero position command	0000	None
1-degree step	0001	1
10-degree step	0010	2
45-degree step	0011	1, 2
60-degree step	0100	3
45-degree square wave	0101	1, 3
5-deg/sec ramp	0110	2, 3
15-deg/sec ramp	0111	1, 2, 3
20-degree step, plus 15-deg/sec ramp to 65 degrees	1000	4
60-degree step, minus 15-deg/sec ramp to zero	1001	1, 4
*20-degree amplitude, 9-second period sine wave	1010	2, 4
**5-degree amplitude, 4.5-second period sine wave	1011	1, 2, 4

*Offset from zero 30 degrees upward

**Offset from zero 20 degrees upward

NOTE: Noise may be added to any of the functions in tables 4-1 and 4-2 by additionally setting the noise function switch on the control panel.

5.0 MONITORING PROCEDURES

Program monitoring in the feasibility demonstration is accomplished both visually and electronically: visually by observing launcher response to Command Selector Control Panel inputs, and electronically by a Brush Strip Recorder, which produces paper recordings of test responses. In view of the extremely short program cycle time, no provisions are made for interrupt or abort, in the event of system malfunction during a program run, other than to switch control of the launcher from digital control to velocity control or analog control by use of the Mode Selector Control Panel switches or the two special switch boxes.

6.0 RECOVERY PROCEDURES

In the event of system malfunction and consequent stopping of the computer program, recovery is accomplished using the program restart procedure given in Section 4.0.

7.0 MAINTENANCE PROCEDURES

The information normally contained in a maintenance section is not applicable to this program since it is not designed for operational use.

PART 5

COMPUTER PROGRAM TEST PLAN

REVERSE SIDE BLANK

CONTENTS

1.0 SCOPE . . . *145*
- 1.1 Test Objectives . . . *145*
- 1.2 Test Description . . . *145, 146, 147*

2.0 SCHEDULE . . . *147*

3.0 TEST SUPPORT REQUIREMENTS . . . *147*
- 3.1 Personnel Requirements . . . *148*
- 3.2 Equipment/Facility Requirements . . . *148*
- 3.3 Software Requirements . . . *149*

TABLES

5-1 Computer Program Reference Functions . . . *146*

1.0 SCOPE

Part 5 defines the scope of test activities conducted by NELC personnel at NWTCP in connection with the digital computer program and specialized hardware configurations required for the feasibility demonstration of digital computer control of the ASROC Mk 112 launcher. The test plan describes in general terms the nature and organization of the required tests. The tests served the dual function of (1) program test and validation, and (2) verification of engineering analysis techniques employed in simulation of the launcher during program design and the design of the digital system. The program exercises the launcher in both train and elevation. The computer program employs two distinct methods of inputting the Launcher Position into the computer, as described in Part 3, Computer Program Design Specification.

1.1 Test Objectives

The tests were planned to meet the following major objectives:

a. Test the digital computer program for accuracy and completeness.

b. Validate the results of the hybrid simulation conducted at NELC by observation and analysis of launcher response to varying input functions.

c. Accumulate and evaluate test data for application to the overall digital fire-control problem.

1.2 Test Description

Tests were planned to (1) exercise the computer program using either KSC or shaft position encoders, and (2) validate all routines. Preparation for the test included outfitting a 40-foot trailer, which transported the computer and all required peripheral equipment to the test site at NWTCP. The trailer also provided a work area for test personnel. The first part of testing included setup of all equipment, interconnection between the launcher and digital computer, installation and checkout of recording instrumentation, and checkout of the launcher to verify that it met its performance specifications.

The second part of testing included running the computer program using the KSC or shaft position encoder feedback, exercising the launcher in all programmed functions, observing launcher responses, and recording data for postmortem evaluation.

1.2.1 INPUTS

In the absence of operational launcher environment (director, continuous control) certain functions were selected as representative of those that would be necessary in the operational configuration. To arrive at a set of parameters that satisfy feasibility demonstration requirements, control functions of the same magnitude as those used in the launcher acceptance tests were used as guidelines. Reference functions used by the digital computer program consist of step functions, ramp functions, sine waves, and combinations of these wave forms. Table 5-1 lists the control functions available to the computer program.

TABLE 5-1. COMPUTER PROGRAM REFERENCE FUNCTIONS

Train	Elevation
STEPS (DEGREES)	
1	1
10	10
45	45
90	60
RAMPS (DEG/SEC)	
5	5
20	15
30	

SINE WAVE

30-degree amplitude, 9-second period — 20-degree amplitude, 9-second period

17.5-degree amplitude, 4.5-second period — 5-degree amplitude, 4.5-second period

Program inputs take into consideration the following launcher response limitations: For train – maximum position, 0 degree to ±170 degrees; maximum velocity, 38.5 deg/sec; maximum acceleration, 120 deg/sec per second. For elevation – maximum position, 0 degree to 116 degrees; maximum velocity, 25 deg/sec; maximum acceleration, 94 deg/sec per second. Program inputs were also designed to prove the capability of the launcher to follow and synchronize to signals in accordance with the accuracies and times of those specified in tables 9, 10, and 12, chapter 9, NAVWEPS OD 10729, of reference K, Part 6, Section 2.4.

1.2.2 ANTICIPATED TEST RESULTS

Since the program was designed as a feasibility demonstration, the actual test of program accuracy and completeness was dependent upon observed and recorded launcher response to programmed control function inputs. If launcher response was within the allowable error parameters shown in tables 9, 10, and 12, chapter 9, NAVWEPS OD 10729, the program was considered valid and complete. This program represents a demonstration of techniques that can be refined and used in the creation of the launcher control portion of an operational fire-control system.

2.0 SCHEDULE

The feasibility demonstration and program test activities were scheduled for the period 10 July 1968 through 28 August 1968. The first two weeks of the scheduled test period were occupied with cabling equipment in the necessary test configuration, resolving various interface problems, debugging computer program routines, and making mechanical adjustments to the launcher power drives. The balance of the test period was devoted to actual test and demonstration activities. All tests were done on a non-interfering, after-hours basis, so that the launcher would be free for scheduled classes during the day.

3.0 TEST SUPPORT REQUIREMENTS

The following paragraphs list the test support requirements in terms of personnel, equipment, and computer programs.

3.1 Personnel Requirements

NELC was responsible for the management and evaluation of the Mk 112 launcher tests. Support in resolving launcher interface problems was made available from Naval Underwater Weapons Research and Engineering Station (NUWRES). The following personnel were required to carry out the test activities.

a. Four electronic engineers, including a project manager, test director and two engineers responsible for test documentation and program execution.

b. Two electronic technicians, one of whom was stationed at the launcher control panel.

3.2 Equipment/Facility Requirements

Facilities for the test were provided at NWTCP adjacent to an ASROC Mk 112 launcher that was made available, along with a dummy director, by NWTCP. All other necessary equipment, including interconnecting cabling, was housed in a 40-foot semi-trailer obtained on loan from the U.S. Naval Schools Command, Mare Island, California, and transported to the test site. A listing of the equipment requirements is contained in Part 6, Computer Program Test Specification.

3.3 Software Requirements

In addition to the computer program, the following supporting programs were required in the conduct of the tests:

a. "UPAK 1B" - 1218 Utility package.

b. "TRIM II FIELD-DATA" Trim II Field Data Code Assembler.

c. "EDITOR" Raytheon Conversational Software Package for the UNIVAC 1218/1232 Computer.

d. Launcher Test Program (Source).

e. "ICE" 1232 Input/Output Console Test Program.

f. "DAADCK" D/A Converter Test program.

PART 6

COMPUTER PROGRAM TEST SPECIFICATION

REVERSE SIDE BLANK

CONTENTS

1.0 SCOPE . . . *155*

2.0 APPLICABLE DOCUMENTS . . . *155*
- 2.1 Computer Program Test Plan, Mk 112 ASROC Launcher Digital Control System . . . *156*
- 2.2 Computer Program Performance Specification Mk 112 ASROC Launcher Digital Control System . . . *156*
- 2.3 Computer Program Design Specification, Mk 112 ASROC Launcher Digital Control System . . . *156*
- 2.4 Other Publications . . . *156, 157*

3.0 REQUIREMENTS . . . *158*
- 3.1 Test Management . . . *158*
- 3.2 Personnel Requirements . . . *158*
- 3.3 Hardware Requirements . . . *160*
- 3.4 Supporting Software Requirements . . . *178*
- 3.5 Test Procedures . . . *179*
- 3.6 Functional Test Design . . . *185*
- 3.7 Procedure For Test Conduct . . . *188*

4.0 QUALITY ASSURANCE . . . *189*

5.0 PREPARATION FOR DELIVERY . . . *190*

6.0 TEST RESULTS . . . *190*
- 6.1 Keyset Central Test . . . *190*
- 6.2 Encoder Test . . . *191*
- 6.3 Gen .ral Comments . . . *194*

ILLUSTRATIONS

6-1 Trailer hardware configuration . . . *161*

6-2 Command Selector Control Panel logic . . . *163*

6-3 Encoder-computer interface logic . . . *165*

6-4 Mode Selector Control Panel . . . *167*

6-5 Configuration block diagram . . . *181*

6-6 Command Selector Control Panel . . . *183*

6-7 Basic launcher position order wave forms . . . *185*

TABLES

6-1 Personnel requirements . . . *159*

6-2 Computer program reference functions . . . *182*

6-3 Train position command switch settings . . . *183*

6-4 Elevation position command switch settings . . . *184*

6-5 Typical train responses using KSC . . . *191*

6-6 Typical train responses using encoder position feedback . . . *192*

6-7 Typical elevation responses using encoder position feedback . . . *192*

1.0 SCOPE

Part 6 contains a detailed description of the program tests and feasibility demonstration conducted by NELC at NWTCP. The tests required a specialized configuration of hardware, including replacement of portions of the launcher system. All equipment necessary to conduct the tests, except the two encoders and two special switch boxes, was housed in a trailer transported to NWTCP and placed adjacent to the launcher. Section 3.0, Part 6, describes the hardware configuration installed in the trailer, discusses the system environment, and gives a detailed account of test methods, procedures, and requirements. All program functions in both train and elevation were exercised during the tests.

The test objectives were as follows:

a. Ascertain the feasibility of utilizing digital control techniques in the operation of the Mk 112 ASROC Launcher.

b. Establish the validity of the engineering analysis and techniques employed in simulating a conventional launcher environment.

c. Validate the results, in terms of hardware response, of hybrid simulation conducted at NELC.

d. Accumulate test data for determination of a transfer function model of the launcher system.

e. Test the digital computer program for accuracy and completeness.

f. Determine optimum sampling rate for overall system performance, considering both the launcher response and conservation of computer time.

g. Gather test data for evaluation and application to future digital fire-control problems.

All test objectives were achieved. The results indicated that digital control of the Mk 112 ASROC launcher is entirely feasible. The basic program design, although in no sense an operational configuration, proved to be sound and completely adequate for the mission performed.

2.0 APPLICABLE DOCUMENTS

The documents listed in paragraphs 2.1 through 2.4 are applicable to Part 6.

2.1 Computer Program Test Plan, Mk 112 ASROC Launcher Digital Control System

Part 5 outlines the scope of testing to be performed and the support requirements for testing in terms of personnel, facilities, and equipment

2.2 Computer Program Performance Specification, Mk 112 ASROC Launcher Digital Control System

Part 2 provides a logical, detailed description of the performance requirements of the computer program. It also describes the hardware interfaces in terms of applicability to the feasibility demonstration task.

2.3 Computer Program Design Specification, Mk 112 ASROC Launcher Digital Control System

Part 3 provides an overall description of the functions of the computer program and detailed information concerning each routine.

2.4 Other Publications

The following publications contain reference material applicable to the content of this specification.

a. NAVWEPS OD 14430, "Factory Acceptance Test Power Drive Mk 61 and Mk 62, Power Amplifier Mk 153 "

b. Naval Underwater Weapons Research and Engineering Station TM 379, *Operational Tests of the ASROC Launcher MK 112 With Simulated ASROC and ERA Missile Loads*, by W. B. Cullison, CONFIDENTIAL, November 1966

c. Naval Electronics Laboratory Center Drawing RAAC 340.1-2230, *Encoder-Synchro Assembly*, March 1968

d. Univac PX 2526, 4 vols., *Technical Manual For Type 1218 Digital Data Computer*, May 1964

e. Bureau of Ordnance Drawing LD 541510, *ASROC Weapon System FCG Mk 111 Functional Schematics For DD 710 Class Ships*, 28 June 1961

f. Univac PX 2910, Revision A, *Programmers Reference Manual For UNIVAC 1218 Computer*, December 1963

g. Bureau of Ships NavShips 94093(A), v.2, *Technical Manual For Digital Data Converter CV-1123/USQ-20(V), Section 8, v.2*, 14 June 1963

h. Naval Electronics Laboratory Center, *Computer Program Performance Specifications For the MK 112 ASROC Launcher*, by D. L. Buck, 28 June 1968

i. Bureau of Weapons NavWeps OP 2385, v.2 (Revision 1, Change 2), *Launching Group MK 16 Mods 1, 2, 3 and 4, Train Power Drive MK 61, Mods 0 and 1, Elevation Power Drive MK 62 Mods 0 and 1, and Power Drive Amplifier MK 153 Mod 0 Amplifier Chassis; Description and Maintenance*, 14 May 1965

j. Navy Electronics Laboratory Technical Memorandum 977, *Digital Multiplexer For the 1218 Computer*, by R. W. Nowlin, 11 August 1966

k. Bureau of Weapons NavWeps OD 10729, Revision 5, *Launching Group MK 16 Mod 4 Shipboard Installation and Checkout, Instructions For*, CONFIDENTIAL, 14 February 1962

3.0 REQUIREMENTS

Paragraphs 3.1 through 3.7 define the detailed test requirements for the feasibility demonstration, including test management, personnel, hardware, functions tested, and procedures. Test results are documented in Section 6.0, Part 6.

3.1 Test Management

All test activities conducted at NWTCP, during the period 10 July to 28 August 1968 were the responsibility of NELC. This responsibility included not only the actual conduct of the feasibility demonstration and program tests, but implementation of the test setup. Cabling equipment in the necessary test configuration, resolving interface problems, and verifying equipment operational status constituted major portions of the hardware setup requirements. Technical and mechanical assistance in areas concerned with the Mk 112 ASROC Launcher was made available by NWTCP.

3.2 Personnel Requirements

Table 6-1 lists the NELC personnel involved in the test activities. The services of NWTCP were used on an as-needed basis. NWTCP personnel assisted with all mechanical and technical problems concerned with the ASROC Launcher on a part-time, as-required basis. The following personnel were present as observers during the feasibility demonstration:

P. McCann (NUWC, Pasadena)

H. Mori (NUWC, Pasadena)

N. Wilbur (NUWRES)

T. Caito (NUWRES)

C. Manning (NELC)

J. Slaughter (NELC)

TABLE 6-1. PERSONNEL REQUIREMENTS

PERSONNEL	CLASSIFICATION	DUTIES
D. W. Doherty (NELC)	Electronic Engr. (Project Manager)	Overall administrative and technical supervision of project. Coordination and direction of test activities and system design.
D. L. Buck (NELC)	Electronic Engr.	Program execution, test monitoring, resolution of design problems, and test documentation.
R. L. Bruck (NELC)	Electronic Engr.	Test monitoring, test documentation, and administrative details.
R. W. Nowlin (NELC	Electronic Engr.	Computer programming, hardware interface resolution, test preparation, and hardware and software consultation.
P. G. Sibert (NELC)	Electronic Tech.	Initial equipment installation and interconnection, trouble shooting, equipment checkout, and test monitoring.
G. F. Grable	Electronic Tech.	Initial equipment installation and interconnection, trouble shooting, equipment checkout, and test monitoring.

3.3 Hardware Requirements

The testing equipment was housed in the trailer except for the two special switch boxes located in the ASROC Control Room and the two encoders located in the train and elevation receiver regulators Mk 46 and 47, Mod 2. The cable listing and description are covered in paragraph 3.3.3. The location of hardware in the trailer is shown in figure 6-1.

The computer and peripheral equipment are as follows:

a. 1 Digital Computer, Model CP 789 (UNIVAC Type 1218).

b. 1 Paper Tape Unit, Type 1232 Input/Output Console.

The supporting equipments, which include some of the special testing assemblies designed and built by NELC, are as follows (miscellaneous types are not listed):

a. 1 Digital Data Converter, Model CV 1123/USQ-20(V).

b. 6 Digital-to-Analog Converters, Packard Bell Model DA6.

c. 2 Operational Amplifiers, Zeltex Model 142C.

d. 1 4-Channel Strip Recorder, Brush Model Mark 200.

e. 2 Shaft-to-Digital Encoders, Datex Model 12-300-27.

f. 1 +6-Volt Power Supply, Sorensen Model Q Nobatron QRC 20-8A.

g. 1 -12-Volt Power Supply, Sorensen Model Q Nobatron QRC 20-8A.

h. 1 +15-Volt Power Supply, Sorensen Model Q Nobatron QRC 20-8A.

i. 1 -15-Volt Power Supply, Sorensen Model Q Nobatron ARC 20-8A.

3.3.1 HARDWARE DESCRIPTIONS

The hardware described in the following paragraphs is that which was designed and built by NELC and is not treated elsewhere. Each description is headed by the title of the equipment being described.

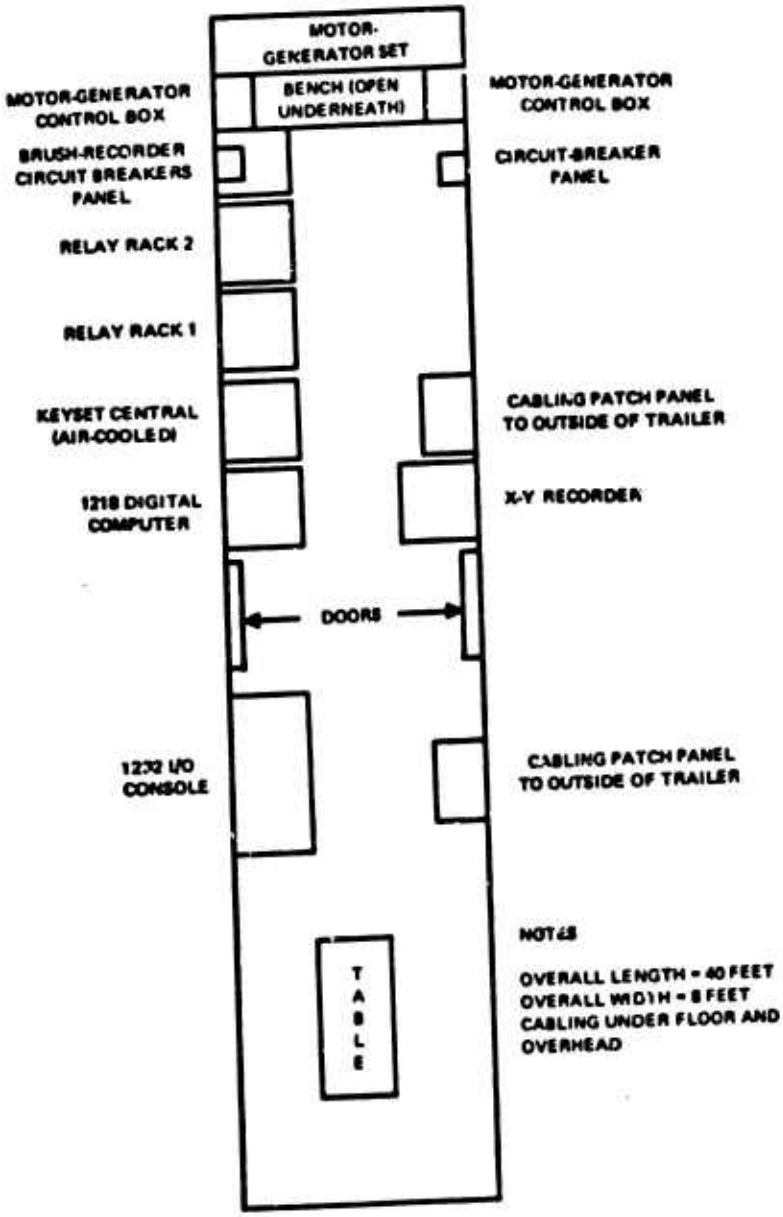

Figure 6-1. Trailer hardware configuration.

3.3.1.1 Command Selector Control Panel Logic

The Command Selector Control Panel is described sufficiently in other sections of this document, but associated with the panel is the logic shown in figure 6-2. All the switches associated with the data bits (2^0 - 2^{17}) are two-position toggle switches. The switch associated with the flip-flop is a spring-loaded, pushbutton type. The data word, to be generated by this panel and logic, is selected by setting the desired toggle switches to give zero volts. After the appropriate switch selection has been performed, the pushbutton switch is pushed. This puts 0 volt on the set side of the flip-flop, causing it to switch to the set state. The output of the flip-flop changes states and causes the line driver to send an Input Data Request (IDR) to the computer. After the computer recognizes the IDR, it reads the data of the switch settings and sends an Input Data Acknowledge (IDA) to the Command Selector Control Panel that resets the flip-flop and drops the IDR. A new command is generated by resetting the desired switches and again actuating the pushbutton switch.

3.3.1.2 Command Selector Control Panel Logic

The Command Selector Control Panel is described sufficiently in other sections of this document, but associated with the panel is the logic shown in figure 6-2. All switches, except the one on the left of figure 4-3, are of the two-position toggle variety. The left-most switch is a spring-loaded pushbutton type. The data word generated by this panel is selected by setting the desired switches to give zero volts. After switch selection has been performed, the pushbutton switch is pushed, setting the flip-flop, activating the line driver, and generating an Input Data Request at the computer. When the computer reads the data, it sends an Input Acknowledge, resetting the flip-flop, and dropping the IDR.

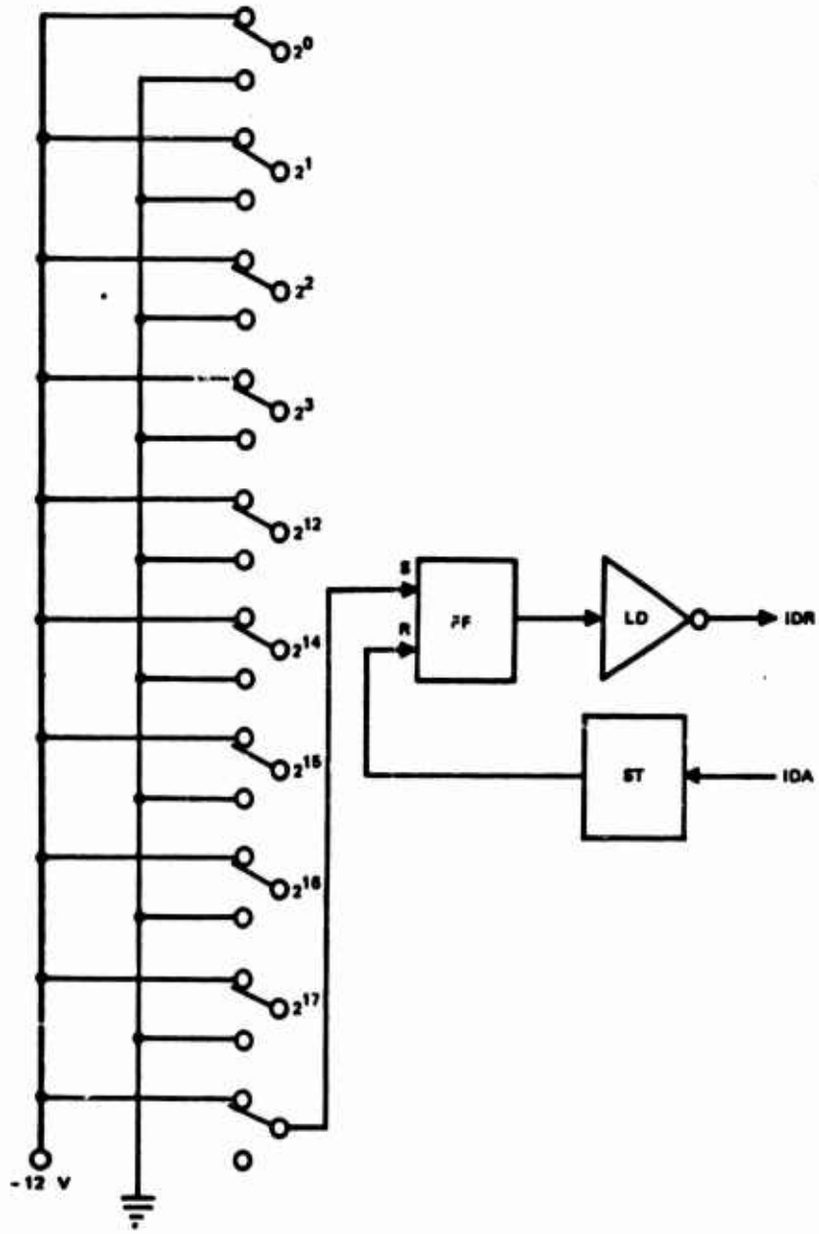

Figure 6-2. Command Selector Control Panel logic.

3.3.1.3 Special Logic Chassis

Included in this special logic chassis are the necessary components to interface the D/A converters and the encoders with the computer. The philosophy and operation of the computer-to-D/A-converter interface are adequately presented in reference j, Section 2.4, Part 6. There are some differences between the interface described and the interface used in the tests at NWCTP. Instead of feeding the external-function code bits directly into the D/A selection circuitry, they are inverted before being applied. The external-function code for selecting D/A 1 through 6 then becomes 000001_8, 000002_8, 000004_8, 000010_8, 000020_8, and 000040_8 instead of as given in reference j.

The encoder-to-computer interface is shown in figure 6-3. The Datex encoders require the following control signal characteristics:

a. Before Interrogation,

Inhibit = -12 V

Store/follow = 0 V

b. Start of Interrogation,

Inhibit = 0 V

Store/follow = 0 V

c. 100μ sec after start of Interrogation,

Inhibit = 0 V

Store/follow = -12 V

(Computer reads data at this time.)

The interface was designed to ensure that the encoder receives these signals as needed and that the computer does not read the data until the encoder is ready. The Schmitt triggers are used for shaping computer pulses and activating subsequent circuits. An external function and external-function code are sent by the computer to initiate action and to select the desired encoder. External-function signal "A" is applied to OR Gate 1, resetting Flip-flops 1, 2, and 3, deactivating Line Drivers 1, 2, and 3, and activating Line Driver 4. This ensures the inhibits to be -12V, the store/follow to be 0 V, and the input data request deactivated. Several μ sec after these events, external-function signal "B" is applied to the AND gates, gating the external-function code and selecting the desired encoder. This sets

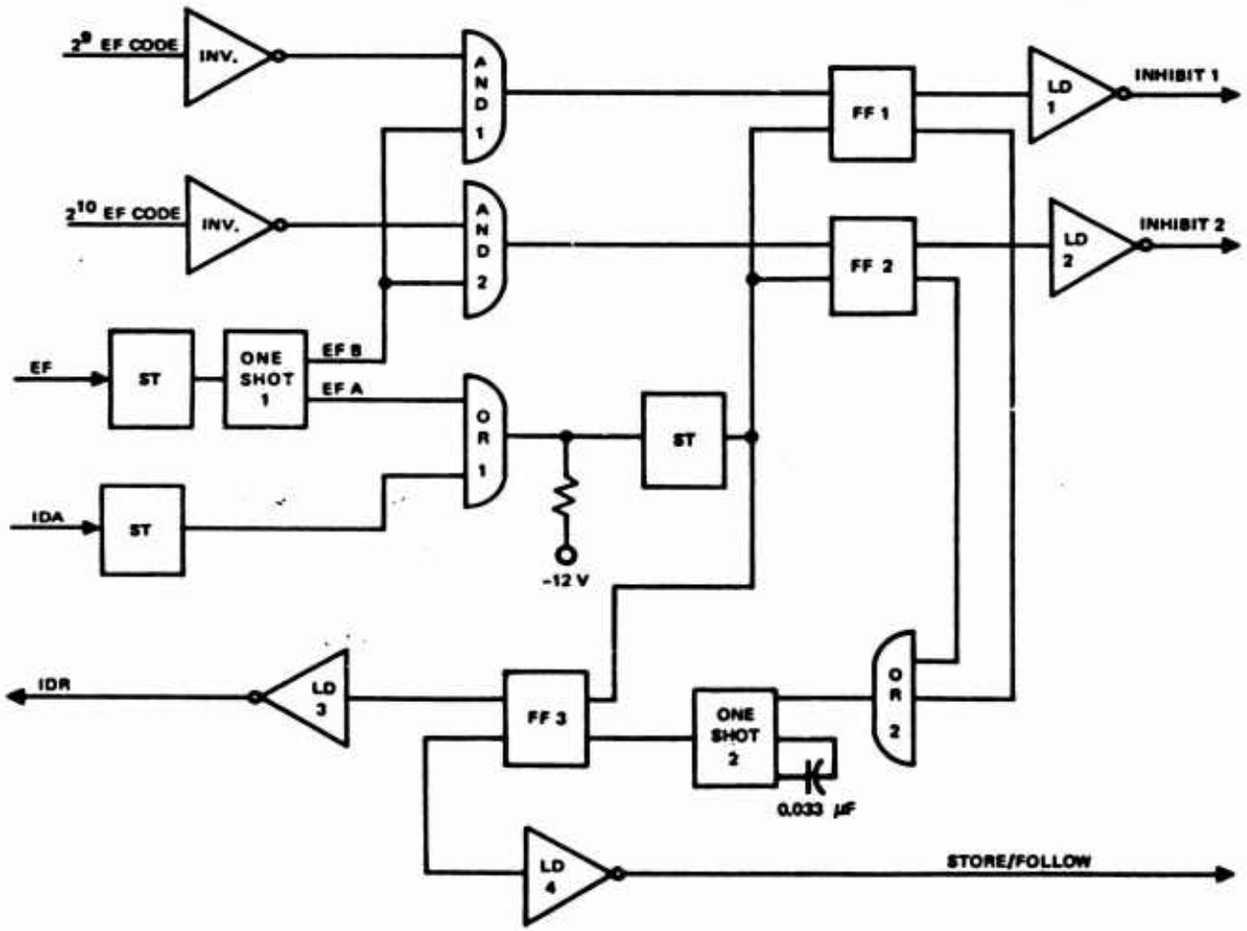

Figure 6-3. Encoder-computer interface logic.

the proper flip-flop and activates the correct line driver, forcing the inhibit of the selected encoder to 0 V. OR Gate 2 applies the output of the flip-flop selected to One Shot 2. The output of this circuit is delayed 100μ sec, after which Flip-flop 3 is set, activating Line Driver 3 and deactivating Line Driver 4.

These actions drive the input data request to 0 V (activated) and the store/follow to −12 V. The computer reads the data at this time and then sends an Input Data Acknowledge. The IDA generates the same sequence of actions as does external function signal "A." The sequence of events can now be reinitiated. The logic chassis also contains (but is not shown in fig. 6-3) the necessary circuitry to convert the encoder data bits to the level acceptable by the computer and for converting computer data to the level acceptable by the D/A converters.

3.3.1.4 Mode Selector Control Panel

The Mode Selector Control Panel, designed and built by NELC, controls the configuration of the launcher system in both train and elevation. Only the train part of the panel will be discussed since the elevation functions are identical to that of the train. The remote position (fig. 6-4) allows the launcher to be operated, in its normal mode, from the Launcher Captain's Control Panel Mk 199. The STANDBY position freezes all launcher operation by disconnecting control of the power drives from the Mk 199. Manual control of the launcher at the Mode Selector Control Panel is obtained with the Mode Selector switch in the VELOCITY position. In the velocity mode, the operator can position the launcher to the left or right by turning the MANUAL CONTROL potentiometer, which adjusts a control voltage applied to the power amplifier driving the torque motor. When the switch is in the DIGITAL position, the launcher power drives are controlled by the computer program.

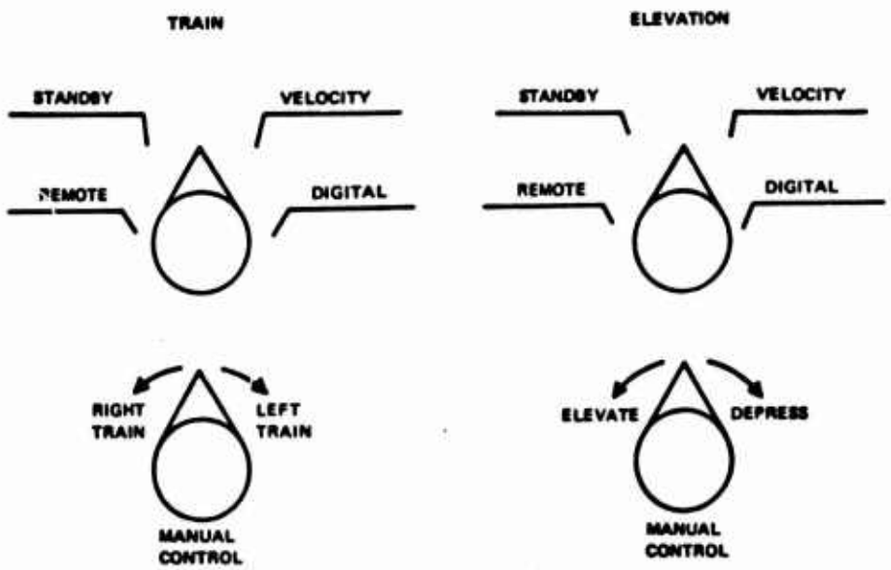

Figure 6-4. Mode Selector Control Panel.

3.3.3 CABLES REQUIRED

3.3.3.1 Cable List

The cables are numbered sequentially from beginning to end, although they are divided into two groups, "digital data" and "analog data, miscellaneous":

DIGITAL DATA

No.	Cable
1	1218 Computer Input Channel 0 to Relay Rack 1
2	1218 Computer Input Channel 5 to KSC output
3	1218 Computer Input Channel 6 to logic chassis
4	1218 Computer Input Channel 7 to 1232 I/O Console output

No.	Cable
5	1218 Computer Output Channel 5 to KSC input
6	1218 Computer Output Channel 6 to logic chassis
7	1218 Computer Output Channel 7 to 1232 I/O Console input
8	Train shaft encoder to logic chassis
9	Elevation shaft encoder to logic chassis
10	Logic chassis to DA6 Rack 1
11	Logic chassis to DA6 Rack 1
12	Logic chassis to DA6 Rack 2
13	Logic chassis to DA6 Rack 2

ANALOG DATA, MISCELLANEOUS

14	DA6 1 output to Relay Rack 2 (patch panel)
15	DA6 2 output to Relay Rack 2 (patch panel)
16	DA6 3 output to Relay Rack 2 (patch panel)
17	DA6 4 output to Relay Rack 2 (patch panel)
18	DA6 5 output to Relay Rack 2 (patch panel)
19	DA6 6 output to Relay Rack 2 (patch panel)
20	Brush Recorder to Relay Rack 2 (patch panel)
21	Mode Selector Control chassis to Captain's Control Panel (Mk 199), Train
22	Mode Selector Control chassis to Captain's Control Panel (Mk 199), Elevation
23	Relay Rack 2 (patch panel) to variplotter (X-Y recorder)
24	Train synchro to KSC
25	Elevation synchro to KSC

3.3.3.2 Cable Descriptions

Each of the following descriptions is headed by a cable number(s); these numbers correspond to those in the cable list (par. 3.3.3.1).

CABLE 1

Title: 1218 Computer Input Channel 0 to Relay Rack 1

Length: 15 feet

Connectors: Cannon DPD 4500-5002 (both ends)

Number, pins	Function	Number, pins
	Note: Transmits Command Selector Control Panel word data bits via standard computer cable.	

CABLE 2

Title: 1218 Computer Input Channel 5 to KSC output

Length: 15 feet

Connectors: Cannon DPD 4500-5002 (both ends)

Number, pins	Function	Number, pins
	Note: Transmits *Bdg'* and *Edg'* from KSC to 1218 via standard computer cable.	

CABLE 3

Title: 1218 Computer Input Channel 6 to logic chassis

Length: 15 feet

Connectors: Cannon DPD 4500-5002 (both ends)

Number, pins	Function	Number, pins
	Note: Transmits *Bdg'* and *Edg'* from encoder logic to 1218 via standard computer cable.	

CABLE 4

Title: 1218 Computer Input Channel 7 to 1232 I/O console output

Length: 20 feet

Connectors: Cannon DPD 4500-5002 (both ends)

Number, pins	Function	Number, pins

Note: Standard computer cable.

CABLE 5

Title: 1218 Computer Output Channel 5 to KSC input

Length: 15 feet

Connectors: Cannon DPD 4500-5002 (both ends)

Number, pins	Function	Number, pins

Note: Standard computer cable.

CABLE 6

Title: 1218 Computer Output Channel 6 to logic chassis

Length: 15 fee:

Connectors: Cannon DPD 4500-5002 (both ends)

Number, pins	Function	Number, pins

Note: Transmits $Bdg1'$, $Edg1'$, e(Bdg'), e(Edg'), $DBdg1'$ and $DEdg1'$ to the D/A converters via standard computer cable.

CABLE 7

Title: 1218 Output Channel 7 to 1232 I/O Console input

Length: 20 feet

Connectors: Cannon DPD 4500-5002 (both ends)

Number, pins	Function	Number, pins

Note: Standard computer cable.

CABLE 8

Title: Train shaft encoder to logic chassis

Length: 100 feet

Connectors: Encoder: KOA6-21S20-38-SN

Chassis: Bendix 20-41S SR

Number, pins (Encoder)	Function	Number, pins
1	-15 V dc	V
1	Common (0 V dc)	D
2	+15 V dc	X
2	Store-follow	A
3	Inhibit	Z
5	2^0	E
6	2^1	F
6	2^2	G
7	2^3	H
7	Parity 1 (not used)	
8	2^4	J
8	2^5	K
9	2^6	L
9	2^7	M
10	Parity 2 (not used)	
10	2^8	N
11	2^9	P
11	2^{10}	R
12	2^{11}	S
13	2^{12}	T
13	2^{13}	U
14	2^{14}	W
18	Test 1 (not used)	
18	Test 2 (not used)	

CABLE 9

Title: Elevation shaft encoder to logic chassis

Length: 100 feet

Connectors: Encoder: KOA6-21S20-38 SN

Chassis: Bendix 20-41S SR

Number, pins (Encoder)	Function	Number, pins
1	-15 V dc	V
1	Common (0 V dc)	D
2	+15 V dc	X
2	Store-follow	A
3	Inhibit	Z
5	2^0	E
6	2^1	F
6	2^2	G
7	2^3	H
7	Parity 1 (not used)	
8	2^4	J
8	2^5	K
9	2^6	L
9	2^7	M
10	Parity 2 (not used)	
10	2^8	N
11	2^9	P
11	2^{10}	R
12	2^{11}	S
13	2^{12}	T
13	2^{13}	U
14	2^{14}	W

CABLE 9 (Continued)

Number, pins (Encoder)	Function	Number, pins
18	Test 1 (not used)	
18	Test 2 (not used)	

CABLE 10 AND 12

Title: Logic chassis to DA6 Rack 1 and Rack 2

Length: 5 feet

Connectors: Winchester MRE 26H XMRE 26-0300 (both ends)

Number, pins (Chassis - P5)	Function	Number, pins (DA6 - J23)
A	2^0	A
B	2^1	B
C	2^2	C
D	2^3	D
E	2^4	E
F	2^5	F
H	2^6	H
J	2^7	J
K	2^8	K
L	2^9	L
M	2^{10}	M
N	2^{11}	N
P	2^{12}	P
R	2^{13}	R
V	Convert trigger	V (DA6 1 and 4)
W	Convert trigger	V (DA6 2 and 5)
X	Convert trigger	V (DA6 3 and 6)
AA	Common (0 V dc)	AA

CABLE 11 AND 13

Title: Logic chassis to DA6 rack 1 and rack 2

Length: 5 feet

Connectors: Winchester MRE 26H XMRE 26-0300 (both ends)

Number, pins (Chassis - P6)	Function	Number, pins (DA6 - J24)
A	2^0	A
B	2^1	B
C	2^2	C
D	2^3	D
E	2^4	E
F	2^5	F
H	2^6	H
J	2^7	J
K	2^8	K
L	2^9	L
M	2^{10}	M
N	2^{11}	N
P	2^{12}	P
R	2^{13}	R

CABLES 14, 15, 16, 17, 18, AND 19

Title: DA6 1, 2, 3, 4, 5, and 6 outputs to Relay Rack 2 (patch panel)

Length: 5 feet

Connectors: DA6: Microdot
Patch Panel: Phone jack ADC PJ 318

Number, pins	Function	Number, pins
	Note: Converter analog output to patch panel via microdot cable.	

CABLE 20

Title: Brush Recorder to Relay Rack 2 (patch panel)

Length: 15 feet

Connectors: Brush Recorder: J3 - Amphenol - 24-28S
Patch Panel: Phone Jack ADC PJ 318

Number, pins (Recorder - J3)	Function	Number, pins
A	Sig. Hi	ADC
B	Sig. Lo	J23A and B
F	Shield	
K	Sig. Hi	
L	Sig. Lo	J24A and B
E	Shield	
P	Sig. Hi	
Q	Sig. Lo	J25A and B
J	Shield	
X	Sig. Hi	
Y	Sig. Lo	J26A and B
T	Shield	

CABLE 21 (TRAIN) AND 22 (ELEVATION)

Title: Mode selector Control chassis to Captain's Control Panel (Mk 199)

Length: 100 feet

Connectors: Mode Selector Control chassis: Bendix MS3102R
Captain's Control Stand (Mk 199): TB 1

Number, pins (MSCC)	Function	Number, pins (Chassis, TB)
A	GND	GND
B	Torque motor center tap	7

CABLE 21 AND 22 (Continued)

Number, pins (MSCC)	Function	Number, pins (Chassis, TB)
C	Torque Motor center tap	End of wire removed from 7
D	Torque motor B+	6
E	Torque motor B+	End of wire removed from 6
F	Stroke potentometer	3
G	Stroke potentiometer	End of wire removed from 3
H	Tachometer	1
I	Tachometer	End of wire removed from 1
J	Torque motor ground	8
K	Torque motor ground	End of wire removed from 8
L	Stroke potentiometer and tachometer ground	2
M	Stroke potentiometer and tachometer ground	End of wire removed from 2

CABLE 23

Title: Relay Rack 2 (patch panel) to variplotter (X-Y recorder)

Length: 20 feet

Conn: Variplotter: P1 - Amphenol - 201356-3
Patch Panel: Phone jack ADC PJ 318

Number, pins (Variplotter - P1)	Function	Number, pins (Patch Panel)
A	Arm (high)	J27 (A and B) Hi
C	Pen (high)	J28 (A and B) Hi
D	+10 V ref.	Zener from +15 V
E	GND (chassis)	Chassis
L	Arm (low)	J27 (A and B) Lo
N	Pen (low)	J28 (A and B) Lo

CABLE 24

Title: Train synchro to KSC

Length: 100 feet

Connectors: Train synchro (Mk 199): TB-2
Keyset Central: A1J13-MS-1057-10B (Cannon)

Number, pins (TB-2)	Function	Number, pins (A1J13)
1	R1	J
2	R2	I
4	S1 (1X)	A
5	S2 (1X)	B
6	S3 (1X)	C
7	S1 (36X)	D
8	S2 (36X)	E
9	S3 (36X)	F

CABLE 25

Title: Elevation synchro to KSC

Length: 100 feet

Connectors: Elevation synchro (Mk 199): TB-3
Keyset Central: A1J12-MS-1057-10B (Cannon)

Number, pins (TB-3)	Function	Number, pins (A1J12)
1	R1	J
2	R2	I
4	S3 (1X)	C
5	S2 (1X)	B
6	S1 (1X)	A
7	S3 (36X)	F
8	S2 (36X)	E
9	S1 (36X)	D

3.4 Supporting Software Requirements

The following programs were utilized in support of the tests. Each program listed is followed by a brief statement of its purpose.

3.4.1 "UPAK 1B" - 1218 UTILITY PACKAGE

This program is used to load the launcher test program and to make any "on-the-spot" changes to the launcher test program.

3.4.2 "TRIM II" - TRIM II FIELD-DATA CODE ASSEMBLER

This program is used to compile and recompile the test program when necessary.

3.4.3 LAUNCHER TEST PROGRAM (SOURCE)

This program is used with Trim II in recompiling the test program.

3.4.4 "EDITOR"

This program is used in making changes to the launcher test program (source).

3.4.5 "TELFA" - COMPUTER DIAGNOSTIC TEST

This program is used to check the computer for any malfunctions.

3.4.6 "ICE" - I/O CONSOLE TEST

This program is used to check the 1232 I/O console for malfunctions.

3.4.7 "MEDIC" - COMPUTER DIAGNOSTIC TEST

This program is used to diagnose troubles in the memory section of the computer.

3.4.8 D/A CONVERTER - ENCODER TEST

This program is used to test the D/A converters and the encoders.

3.5 Test Procedure

Hardware configuration test inputs and operator actions for the feasibility demonstration are discussed in paragraphs 3.5.1 through 3.5.4. The test program was written to contain all routines for both Keyset Central and encoder input configurations. Program execution for either type of input was controlled by skip-key action at the computer.

3.5.1 ENCODER INPUT CONFIGURATION

Figure 6-5 shows a block diagram of the hardware configuration. Encoders were mounted in the train and elevation receiver regulators. The digital outputs of the encoders correspond to launcher train and elevation positions which are sent through NELC-designed interface equipment to the 1218 computer. The computer program uses these position signals to determine errors and the appropriate compensated control signals, which are then outputted to the launcher.

3.5.2 KEYSET CENTRAL INPUT CONFIGURATION

Figure 6-5 shows the configuration when launcher train and elevation coarse and fine synchros are used for position feedback through KSC. By setting the proper computer skip key the test program obtains these position data instead of those provided by the encoders. Keyset Central converts the launcher coarse and fine synchro signals to digital quantities for use by the digital computer in error determination and compensation.

3.5.3 INPUTS

Inputs for system operation comprise those functions that will most closely simulate the normal command inputs to the ASROC launcher, with additional reference functions added to assist in determining optimum performance parameters. Reference functions used by the program (via appropriate switch setting at the Command Selector Control Panel) consist of step functions, ramp functions, and sine waves of the same magnitude as those used in conducting launcher acceptance tests (table 6-2).

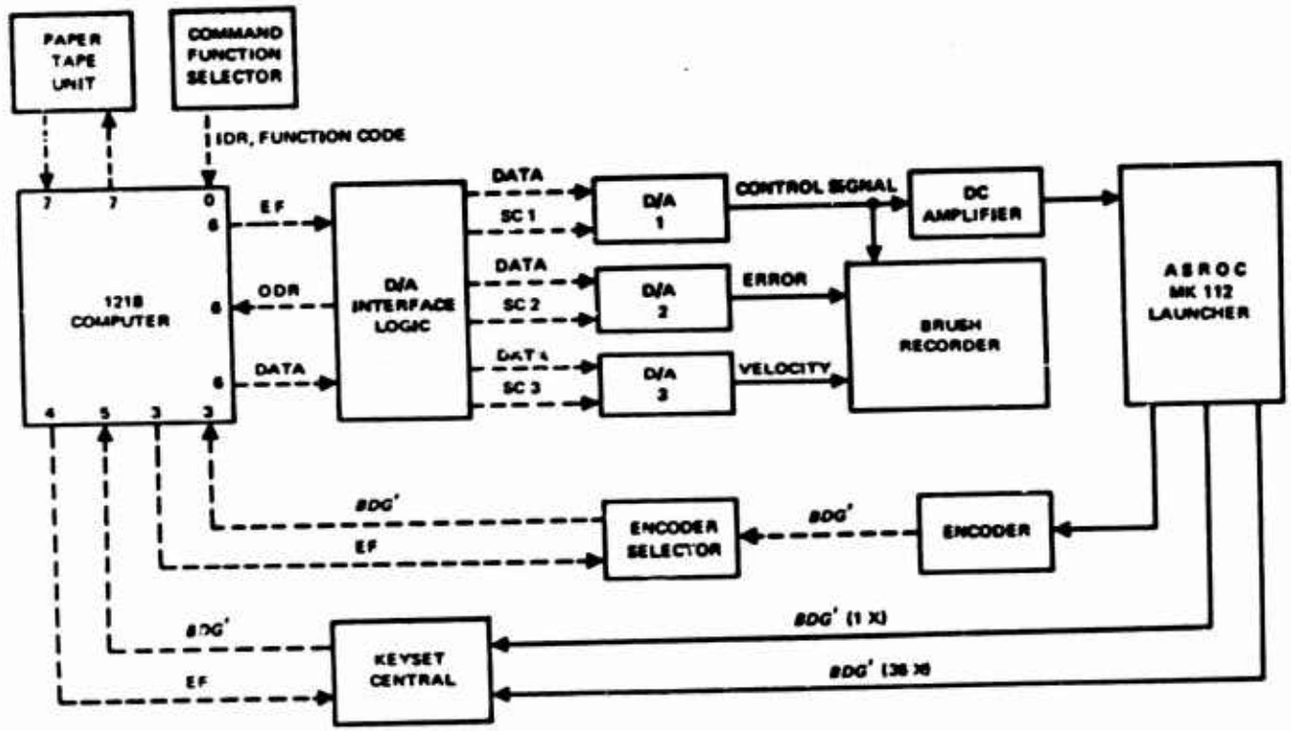

Figure 6-5. Configuration block diagram.

TABLE 6-2. COMPUTER PROGRAM RL"ERENCE FUNCTIONS

Steps (deg)	Ramps (deg/sec)	Sine wave
1	5	30-degree, 9-second period
10	15	17.5-degree, 4.5-second period
45	20	20-degree, 9-second period
50	30	5-degree, 4.5-second period
75		
160		

3.5.4 OPERATOR ACTIONS

System operation subsequent to initialization and encoder or KSC selection requires only switch and pushbutton action at the Command Selector Control Panel. Figure 6-6 shows the panel and identifies the switches. The four-switch array on top of the panel controls all train function inputs to the computer, with the switch at the extreme left representing the least significant digit. The four-switch array on the bottom of the panel controls all elevation function inputs to the computer, with the least significant digit located at the extreme left. After appropriate switch settings are made, the selection is entered into the computer by depressing the Input Data Request button. Switch settings merely set a binary code that calls up the function required after being entered into the computer. The functions and their binary code are shown in table 6-3. Switches are set by placing them in the UP position.

It should be noted that, regardless of the switch settings, no new launcher commands will be executed until the IDR pushbutton is depressed, thus signaling the program to interrogate the panel.

Step functions are executed by a direct and immediate movement to the new commanded position. Ramp functions impart a rate of change, or velocity component; thus the combinations shown in tables 6-3 and 6-4 (30-degree step plus 15 deg/sec ramp to 90 degrees; 60-degree step, minus 20 deg/sec ramp to -60 degrees; 20-degree step, plus 15/deg/sec ramp to 65 degrees; and 60-degree

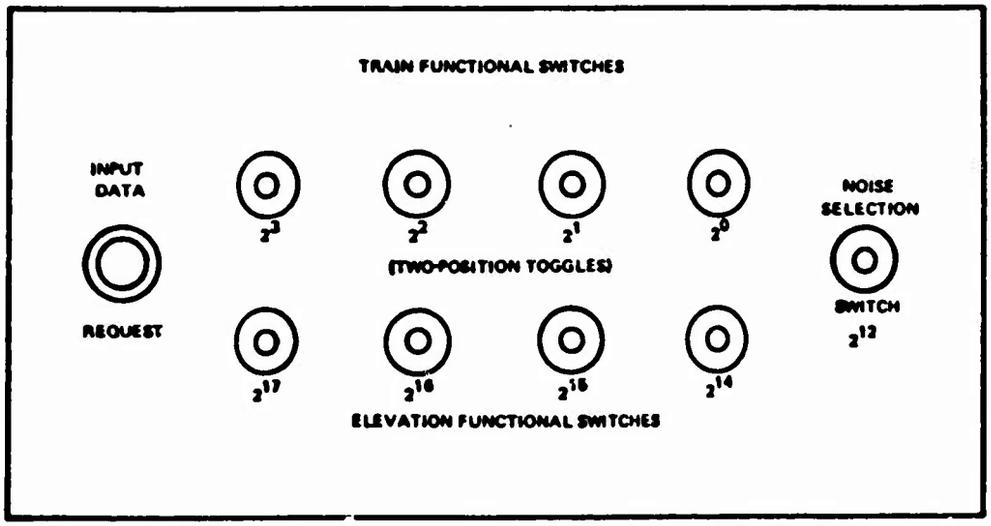

Figure 6-6. Command Selector Control Panel.

TABLE 6-3. TRAIN POSITION COMMAND SWITCH SETTINGS

Function	Binary code	Control panel switch setting (function)
Generate zero position command	0000	None
1-degree step	0001	1
10-degree step	0010	2
45-degree step	0011	1, 2
90-degree step	0100	3
75-degree square wave	0101	1, 3
5-deg/sec ramp	0110	2, 3
20-deg/sec ramp	0111	1, 2, 3
30-deg/sec ramp	1000	4
30-degree step, plus 15-deg/sec ramp to 90 degrees	1001	1, 4
60-degree step, minus 20-deg/sec to -60 degrees	1010	2, 4
30-degree amplitude, 9-second period sine wave	1011	1, 2, 4
17.5-degree amplitude, 4.5-second period sine wave	1100	3, 4

TABLE 6-4. ELEVATION POSITION COMMAND SWITCH SETTINGS

Function	Binary code	Control panel switch settings (function)
Generate zero position command	0000	None
1-degree step	0001	1
10-degree step	0010	2
45-degree step	0011	1, 2
60-degree step	0100	3
45-degree square wave	0101	1, 3
5-deg/sec ramp	0110	2, 3
15-deg/sec ramp	0111	1, 2, 3
20-degree step, plus 15-deg/sec ramp to 65 degrees	1000	4
60-degree step, minus 15-deg/sec ramp to zero	1001	1, 4
*20-degree amplitude, 9-second period sine wave	1010	2, 4
**5-degree amplitude, 4.5-second period sine wave	1011	1, 2, 4

*Offset from zero 30 degrees upward
**Offset from zero 20 degrees upward

step, minus 15 deg/sec ramp to zero) furnish both a position and a velocity command. In similar fashion, the 75 (45)-degree square-wave input furnishes a command that drives the launcher to the 75 (45)-degree position, returns it to 0 degree, drives it back to 75 (45), returns it to 0 degree, etc., until another command is executed. The sine-wave input introduces a sinusoidal movement, about 0 degree in train.

Since elevation will depress below horizontal only a few degrees, the sine-wave command is biased above the horizontal position. A sinusoidal motion is thus produced around this biased position. Typical functions are shown in figure 6-7.

Complete operating instructions are given in Part 4, Computer Program Operator's Manual.

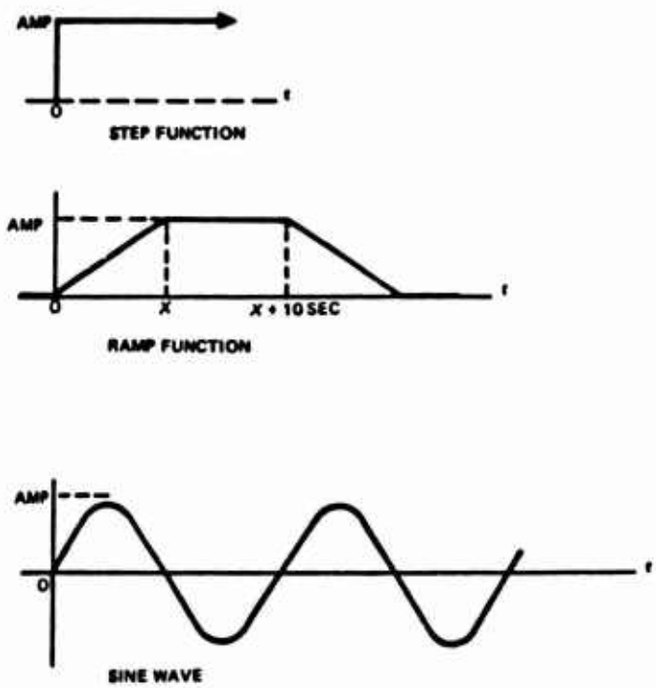

Figure 6-7. Basic launcher position order wave forms.

3.6 Functional Test Design

Paragraphs 3.6.1 through 3.6.8 present the static values, parameters, accuracies required, data collection and analysis methods, and other significant details of the feasibility demonstration tests. Since the demonstration tests were not only of the computer program, but also of the engineering techniques employed to achieve digital control of the ASROC Mk 112 launcher, the following paragraphs contain information concerning the hardware used. Also significant is that the test program exercised the launcher in both axes, multiplexing the functions for both axes as required. Train and elevation portions of the test program are functionally identical.

3.6.1 PRE-STANDBY VALUES

Static data items contained within the computer program are, for the most part, contained in the three tables stored upon program initialization. The noise table (NTABN) and the two error curve tables (TETABN and ELETBN) contain static values that become dynamic program inputs when called by appropriate operator switch action (par. 3.5.4). The noise table is used to modify commands in both train and elevation; TETABN is used to compensate train, and ELETBN is used to compensate elevation. In addition to the static values stored in the tables, certain constants used for internal computation are part of the static data.

3.6.2 RANGE OF PARAMETERS

Inasmuch as the feasibility demonstration program tests are directed toward launcher control within already established error limits, major emphasis is placed upon the generation of digital input signals to create launcher response that meets or exceeds system criteria. The following response parameters were considered: (1) position, -180 degrees to +173 degrees in train and up 116 degrees and down 32 degrees in elevation; (2) velocity, 40 deg/sec in train and 25 deg/sec in elevation; and (3) acceleration, 120 deg/sec per second in train and 94 deg/sec per second in elevation. To demonstrate digital launcher control satisfactorily, the input functions selected paralleled the functions listed in reference k, Part 6, paragraph 2.4. Since these functions are deemed adequate for acceptance testing of the launcher itself, it is believed that they constitute an adequate test of the digital program capabilities.

3.6.3 REQUIRED ACCURACIES

Reference k, Part 6, paragraph 2.4 lists the required accuracies for those functions tested by the feasibility demonstration program.

3.6.4 DATA COLLECTION METHODS

The tests were monitored both visually and electronically. Visual data were gathered by test observers and conductors in the form of test logs and notes. In tests to determine the effects of sampling rates, test personnel rode the launcher to ascertain by feel if any roughness of operation was encountered. Electronic data collection was accomplished by use of a Brush Recorder that produced strip recordings of test responses for later evaluation. In addition to observer and electronic data, a comprehensive photographic record of launcher response during the feasibility demonstration was made.

3.6.5 ANALYSIS TECHNIQUES

The results and data were subjected to immediate post-test analysis, consisting of discussion of visual results and comparison of output recordings against known input values. In addition to the immediate evaluation, all test data accumulated during the series of demonstrations were saved for later analysis and evaluation by NELC. Conclusions and test results are documented in Section 6.0, Part 6.

3.6.6 REPORTING REQUIREMENTS

Since each test was essentially of a "one-shot" nature, reporting of individual test runs and results was conducted on an informal basis, with immediate remedial action undertaken in the event of system malfunction (either hardware or software). Each test, however, was documented for historical purposes. Major reporting requirements are fulfilled by Section 6.0, Part 6.

3.6.7 TEST INPUT VALUES

Test input values are discussed in paragraph 3.5.4 and shown in table 6-3.

3.6.8 EXPECTED OUTPUT VALUES

Test output values are referenced in paragraph 3.6.3 and the required response accuracies are given in reference k, section 2.4.

3.7 Procedure for Test Conduct

For each series of tests, the general procedure remained essentially the same. As discussed in paragraph 3.5, tests were conducted with the option of two distinct methods of inputting launcher position – either via encoders or through KSC. After the hardware was configured to meet test requirements and the appropriate switch settings made, program operation for either input was the same because the computer program contains all routines for both inputs. Specific instructions for program operation are contained in Part 4, Computer Program Operator's Manual.

3.7.1 GENERAL PROCEDURE

The following general procedure was adhered to throughout the tests, with minor variations occurring as circumstances demanded.

a. Load the program into the computer via the 1232 Input/Output Console.

b. Using "UPAK 1B," set the sampling rate and insert the controller and sine-wave coefficients, appropriate to the given test run, into memory.

c. Enter 500 octal in the P register to provide program initial address.

d. Set computer Skip Key 2 to select the appropriate mode of input.

e. Start the computer. The computer runs through initialization, then 5-stops.

f. Restart the computer.

g. Set all switches on the Command Selector Control Panel to the OFF position and depress the Input Data Request pushbutton to zero the system.

h. Request the test personnel in the ASROC Control Room to set switches on the special switch boxes to allow selection of mode at the Mode Selector Control Panel in the trailer.

i. Set the mode selector switch on the Mode Selector Control Panel to digital position. The computer program is now controlling the launcher.

j. Exercise the launcher in various control functions by making appropriate switch settings at the Command Selector Control Panel.

4.0 QUALITY ASSURANCE

No formal quality assurance procedures were undertaken during the test activities since the tests were for feasibility demonstration only. To insure applicability and adequacy of the control functions used as test inputs, those portions of the program were subjected to rigorous in-house testing at NELC through digital simulation of launcher functions. In essence, the tests conducted at NWTCP and the results obtained constituted a valid assurance of the quality of the program and a verification of the concepts involved in its creation. The nature of this program, requiring not only that launcher control be exercised by digital techniques, but that the environmental data necessary to launcher operation be included in the program itself, made it mandatory that all elements of the program be carefully constructed.

5.0 PREPARATION FOR DELIVERY

Not applicable to this document.

6.0 TEST RESULTS

This section of Part 6 contains a compilation of test results achieved during the feasibility demonstration conducted at NWTCP. Tests were run using Keyset Central or encoders to input the Launcher Position to the 1218 Computer.

Several digital controllers were tested. The major development effort was devoted to a discrete compensation controller that could be used at sampling rates of 10, 20, and 32 samples per second. The test results presented in paragraphs 6.1 and 6.2 are a representative sampling of those obtained from numerous program runs and are presented here to show typical responses to program inputs.

6.1 Keyset Central Test

The test results shown in table 6-5 represent a typical program run made using KSC to convert two-speed synchro data into computer words used by the 1218 computer. To obtain these figures, the Brush Recorder tracings for the series of program runs were analyzed for each type of input. Since step functions, regardless of magnitude, represent a direct movement to a preselected position, the overshoot, steady-state error, and time to synchronize to ±20 minutes are shown for both train and elevation. Similarly, the response for ramps and sine-wave inputs was recorded and the maximum peak-to-peak, steady-state errors for both train and elevation are tabulated in table 6-5. The system met all of the launcher performance specifications using KSC to input the Launcher Position data.

TABLE 6-5. TYPICAL TRAIN RESPONSES USING KSC

A.	Maximum Steady State Error	20 samples/second
	1. Step input	0.6 minute
	2. Ramp input, 20 deg/sec	1.2 minutes
	3. Sine wave, 17/4.5	28 minutes
B.	Overshoot to 90-degree Step	9 minutes
C.	Time to Synch to ±20 minutes	
	1. Step input, 1 degree	0.5 second
	2. Sine wave, 17/4.5	1.5 seconds

6.2 Encoder Test

Tables 6-6 and 6-7 show results for the tests using the encoder input of the Launcher Position. All results were arrived at in essentially the same manner as that employed in tabulating KSC input tests, the major difference being in the number of program runs recorded. The encoder gave slightly smoother test results than the KSC. This is partially due to the conversion delay associated with Keyset Central. As in the Keyset Central tests, the sampling rate had no significant effect on launcher steady-state error to a step function. For sample rates of 20 and 32, the launcher performance was equal to, or in most instances better, than the accepted launcher performance.

Although the train error to the 4.5-second-period sine wave for 10 samples per second did not meet the performance specifications, all other errors are well within the allowable limits. No roughness of operation was indicated in the recorded response trace, and personnel who physically "rode" the launcher during sine-wave test runs reported that very little difference in launcher performance could be detected. All considered sampling rates resulted in smooth launcher operation.

TABLE 6-6. TYPICAL TRAIN RESPONSES USING ENCODER POSITION FEEDBACK

		10 samples/second	20 samples/second	32 samples/second
A.	Maximum Steady State Error			
	1. Step inputs	0.9 minute	0.6 minute	0.6 minute
	2. Ramp input, 20 deg/sec	1.8 minutes	1.2 minutes	1.2 minutes
	3. Sine wave input, 17/4.5	54 minutes	23 minutes	20 minutes
B.	Overshoot to 90-degree Step	27 minutes	6 minutes	4 minutes
C.	Time to Synch to ±20 minutes			
	1. Step Input, 1 degree	0.7 second	0.4 second	0.4 second
	2. Sine Wave, 17/4.5	2.3 seconds	1.5 seconds	0.66 second

TABLE 6-7. TYPICAL ELEVATION RESPONSES USING ENCODER POSITION FEEDBACK

A.	Maximum Steady State Error	20 samples/second	32 samples/second	32 samples/second
	1. Step inputs	0.9 minute	0.6 minute	0.6 minute
	2. Ramp input, 15 degrees/second	24 minutes	1.2 minutes	1.2 minutes
	3 Sine wave input, 5/4.5	30 minutes	10 minutes	10 minutes
B.	Overshoot to 60-degree step	11 minutes	10 minutes	4.3 minutes
C.	Time to Synch to ±20 minutes			
	1. Step input, 1 degree	0.9 second	0.4 second	0.3 second
	2. Sine wave, 5/4.5	2.0 seconds	1.7 seconds	1.5 seconds

6.3 General Comments

The test results conclusively demonstrated the feasibility of digital launcher control. Runs at other sampling frequencies were made merely to verify the simulation results established during the prior NELC runs; at that time, it was shown that a sampling rate of 20 samples per second or better would give the most desirable response. The actual launcher tests verify the system hybrid simulation at NELC. Therefore the launcher system can be optimized through hybrid simulation techniques, and the results can be applied directly to the launcher with minimum difficulty.

APPENDIX
FORMAT FOR AN OPERATIONAL DIGITAL LAUNCHER CONTROL PROGRAM

REVERSE SIDE BLANK

CONTENTS

1.0 GENERAL . . . *199*
1.1 Suggested Operational Program . . . *199*

TABLE

A-1 Program listing . . . *200 (Continued through 210)*

REVERSE SIDE BLANK

1.0 GENERAL

This appendix contains a suggested format that will aid in the development of the launcher control portion of an operational digital fire-control program. The sample program shown has been extracted from the feasibility demonstration program and is presented only for the purpose of illustrating the typical parameters that must be considered.

In addition to the functions specified, an operational program must take into account launcher synchronization. The launcher contains a synchronism firing interlock that prevents the firing of a missile whenever the error signal exceeds 20 minutes. When error is less than 20 minutes, the firing interlock is activated and the missile can be fired. In the digital control system, a sampling rate of 20 samples/second is recommended to allow for optimum smoothness in launcher operation.

1.1 Suggested Operational Program

The following output listing represents a suggested program format for both the train and elevation axes control portion of an operational program.

TABLE A-1. PROGRAM LISTING

```
MEM. STRG. USED   631
00500  THRU   01326
01350  THRU   01350
02535  THRU   02335

  0  □        □PRØG'ASRØC'(ØPERATIØNAL)
88
00500  00 0000  1  □INITN   □0'□INITIALIZATIØN PRIØR TØ ØPERATIØN
00501  10 0551  2  □ERRØRN □ENTAU'AZERØN□TRAIN ERRØR TABLE GENERATØR
00502  12 0546  3  □        □ENTAL'K2N
00503  44 1354  4  □        □STRAL'TETABN+4
00504  44 0547  5  □        □STRAL'TEMPN
00505  50 7201  6  □        □ENTICR'1
00506  36 0005  7  □        □ENTBK'5□STARTS STØRING AT 1/2 DEGREE
00507  12 0547  10  □AL00PN □ENTAL'TEMPN□START CALCULATING VALUE

00510  14 0545  11  □        □ADDAL'K1N
00511  44 0550  12  □        □STRAL'TEMPN+1
00512  12 0544  13  □        □ENTAL'KN
00513  26 0550  14  □        □DIVA'TEMPN+1
00514  14 0547  15  □        □ADDAL'TEMPN
00515  44 0547  16  □        □STRAL'TEMPN
00516  45 1350  17  □        □STRALB'TETABN□STØRES VALUE IN TABLE
00517  10 0551  20  □        □ENTAU'AZERØN

00520  56 0552  21  □        □BSK'LCTN□500D
00521  34 0507  22  □        □JP'AL00PN□NØT FINISHED
00522  10 0551  23  □ERTBGN □ENTAU'AZERØN□ELEV ERRØR TABLE GENERATØR
00523  12 0555  24  □        □ENTAL'EK2N
00524  44 2341  25  □        □STRAL'ELETBN+4
00525  44 0547  26  □        □STRAL'TEMPN
00526  50 7201  27  □        □ENTICR'1
00527  36 0005  30  □        □ENTBK'5

00530  12 0547  31  □EL00PN □ENTAL'TEMPN
00531  14 0554  32  □        □ADDAL'EK1N
00532  44 0550  33  □        □STRAL'TEMPN+1
00533  12 0553  34  □        □ENTAL'EKN
00534  26 0550  35  □        □DIVA'TEMPN+1
00535  14 0547  36  □        □ADDAL'TEMPN
00536  44 0547  37  □        □STRAL'TEMPN
00537  45 2335  40  □        □STRALB'ELETBN
```

TABLE A-1. (Continued)

```
00540  10 0551  41  □        □ENTAU'AZERØN
00541  56 0556  42  □        □BSK'ELCTN
00542  34 0530  43  □        □JP'ELØØPN
00543  55 0500  44  □        □IJP'INITN
00544  12 1727  45  □KN      □121727'
00545  00 1027  46  □KIN     □1027'
00546  00 0700  47  □K2N     □700'
00547  00 0000  50  □TEMPN   □0'

00550  00 0000  51  □        □0'
00551  00 0000  52  □AZERØN  □0'
00552  00 0764  53  □LCTN    □500D'
00553  12 1727  54  □EKN     □121727'
00554  00 1027  55  □EKIN    □1027'
00555  00 0700  56  □EK2N    □700'
00556  00 0764  57  □ELCTN   □500D'
00557  00 0000  60  □EXECTN  □0'□PRØGRAM ENTRANCE CELL
00560  12 1226  61  □TRVELN  □ENTAL'VTEMPN□CALCULATE FEEDFØRWARD VELØCITY
00561  44 1227  62  □        □STRAL'VTEMPN+1
00562  12 1313  63  □        □ENTAL'RØFTN
00563  16 1314  64  □        □SUBAL'RØFTIN□NEW VELØCITY
00564  24 1171  65  □        □MULAL'VARCØN
00565  16 1227  66  □        □SUBAL'VTEMPN+1□VELØCITY FILTER
00566  50 4202  67  □VTIMEN  □RSHAL'2□SAMPLE TIME DEPENDENT
00567  14 1227  70  □        □ADDAL'VTEMPN+1

00570  44 1226  71  □        □STRAL'VTEMPN
00571  24 1231  72  □        □MULAL'VSIZEN
00572  50 4316  73  □        □RSHA'14D
00573  44 1232  74  □        □STRAL'VELØCN
00574  12 1315  75  □ELVELN  □ENTAL'EVTMPN□CALCULATE ELEV FDFRD VELØCITY
00575  44 1316  76  □        □STRAL'EVTMPN+1
00576  12 1317  77  □        □ENTAL'ERØFTN
00577  16 1320  100  □        □SUBAL'ERØFTN+1

00600  24 1171  101  □        □MULAL'VARCØN
00601  16 1316  102  □        □SUBAL'EVTMPN+1
00602  50 4202  103  □ETIMEN  □RSHAL'2
00603  14 1316  104  □        □ADDAL'EVTMPN+1
00604  44 1315  105  □        □STRAL'EVTMPN
00605  24 1235  106  □        □MULAL'ESIZEN
00606  50 4316  107  □        □RSHA'14D
00607  44 1236  110  □        □STRAL'EVELCN
```

TABLE A-1 (Continued)

```
00610  12 1237  111  ⊡TKSCIN ⊡ENTAL'IKPISN⊡INPUT TRAIN PØSITIØN
00611  44 0112  112  ⊡       ⊡STRAL'112
00612  50 1305  113  ⊡       ⊡EXFCT'5'AD'2'REQCØN
00613  00 1242
00614  00 1240
00615  50 2705  114  ⊡       ⊡EXFØV'5
00616  34 0616  115  ⊡WAITIN ⊡JP'WAITIN
00617  50 3000  116  ⊡REENTN ⊡RIL'

00620  12 0113  117  ⊡       ⊡ENTAL'113
00621  02 1240  120  ⊡       ⊡CMAL'REQCØN
00622  61 0626  121  ⊡       ⊡JPEQ'BUFERN
00623  02 1246  122  ⊡       ⊡CMAL'TWØN
00624  61 0636  123  ⊡       ⊡JPEQ'ENDIN
00625  50 5640  124  ⊡       ⊡STØP'
00626  50 1105  125  ⊡BUFERN ⊡BUFIN'5'AD'2'INPØSN
00627  00 1243

00630  00 1242
00631  50 1305  126  ⊡       ⊡EXFCT'5'AD'2'INWDCN
00632  00 1246
00633  00 1244
00634  50 2705  127  ⊡       ⊡EXFØV'5
00635  34 0635  130  ⊡       ⊡JP'LØK-0
00636  12 1242  131  ⊡ENDIN  ⊡ENTAL'INPØSN
00637  50 4202  132  ⊡       ⊡RSHAL'2

00640  14 1242  133  ⊡       ⊡ADDAL'INPØSN
00641  02 1247  134  ⊡       ⊡CMAL'P18ØN
00642  67 0644  135  ⊡       ⊡JPMGR'LØK+2
00643  16 1250  136  ⊡       ⊡SUBAL'P36ØN
00644  50 6100  137  ⊡       ⊡CPAL'
00645  44 1321  140  ⊡       ⊡STRAL'CØFTN
00646  12 1313  141  ⊡       ⊡ENTAL'RØFTN⊡NEW PØSITIØN CØMMAND
00647  16 1321  142  ⊡       ⊡SUBAL'CØFTN⊡PRESENT TRAIN PØSITIØN

00650  44 1251  143  ⊡LEXITN ⊡STRAL'AIRN⊡STØRE ERRØR
00651  44 1252  144  ⊡       ⊡STRAL'AIRIN
00652  10 1251  145  ⊡       ⊡ENTAU'AIRN
00653  50 4412  146  ⊡       ⊡SF'100
00654  12 0017  147  ⊡       ⊡ENTAL'17
00655  61 0713  150  ⊡       ⊡JPALZ'SWJPN
00656  40 1170  151  ⊡       ⊡CL'MØDJPN
00657  50 7201  152  ⊡ECTABN ⊡ENTICK'1⊡TRAIN ERRØR CURVE TABLE LØØKUP
```

TABLE A-1 (Continued)

```
00660  36 0000  153  □        □ENTBK'0□ZERØS B BØX1
00661  12 1251  154  □        □ENTAL'AIRN
00662  65 0666  155  □        □JPALP'LØK+4□JUMP IF ERRØR PØITIVE
00663  50 6100  156  □        □CPAL'□MAKE VALUE ABSØLUTE
00664  44 1256  157  □        □STRAL'TESTN□FLAG, NEGATIVE NUMBER
00665  34 0667  160  □        □JP'LØK+2
00666  40 1256  161  □        □CL'TESTN□FLAG, PØSITIVE NUMBER
00667  44 1257  162  □        □STRAL'TESTN+1□SAVE ABSØLUTE ERRØR

00670  16 1255  163  □        □SUBAL'LIMITN
00671  65 0674  164  □        □JPALP'LØK+3
00672  12 1257  165  □        □ENTAL'TESTN+1□ABSØLUTE VALUE
00673  34 0675  166  □        □JP'LØK+2
00674  12 1255  167  □        □ENTAL'LIMITN□MAXIMUM ERRØR
00675  24 1254  170  □        □MULAL'TEN□TENTHS ØF DEGREES
00676  50 4307  171  □        □RSHA'7□REMOVES SF
00677  44 1257  172  □        □STRAL'TESTN+1□STØRE ERRØR TABLE INDEX

00700  32 1257  173  □        □ENTB'TESTN+1
00701  13 1350  174  □        □ENTALB'TETABN
00702  10 1256  175  □        □ENTAU'TESTN□CHECK SIGN ØF ERRØR
00703  60 0705  176  □        □JPAUZ'LØK+2□JUMP IF SIGN PØSITIVE
00704  50 6100  177  □        □CPAL'□NEGATIVE ERRCR
00705  50 4203  200  □        □RSHAL'3□REDUCE SF7
00706  44 1260  201  □        □STRAL'NØFZN□CØNTAINS ØUTPUT
00707  36 0005  202  □        □CLEAR'6'TEHISN

00710  41 1272
00711  73 0710
00712  34 0733  203  □        □JP'ADDVLN
00713  57 1170  204  □SWJPN   □ISK'MØDJPN
00714  34 0720  205  □        □JP'LESSIN
00715  50 4401  206  □        □SF'1
00716  12 0017  207  □        □ENTAL'17
00717  63 0657  210  □        □JPALNZ'ECTABN

00720  70 0001  211  □LESSIN  □ENTALK'1
00721  44 1170  212  □        □STRAL'MØDJPN
00722  12 1251  213  □CØNCØN  □ENTAL'AIRN□CØMPLETE TRAIN CØNTRØLLER
00723  24 1326  214  □        □MULAL'STLIN
00724  50 4314  215  □        □RSHA'12D
00725  44 1272  216  □        □STRAL'TEHISN□SAVE TRAIN ERRØR HISTØRY
00726  24 1176  217  □        □MULAL'AC□EFN□A0 TIMES E(N) SF22
00727  50 4310  220  □        □RSHA'8D□SF 14
```

TABLE A-1. (Continued)

```
00730  14 1277  221  □        □ADDAL'THISTN+2□PREVIØUS PARTIAL PRØDUCT
00731  44 1275  222  □        □STRAL'THISTN
00732  50 4207  223  □        □RSHAL'7
00733  14 1232  224  □ADDVLN  □ADDAL'VELØCN□ADDS VELØCITY TØ TRAIN M(Z)
00734  24 1262  225  □        □MULAL'PKN
00735  50 4307  226  □        □RSHA'7
00736  76 1203  227  □        □RJP'ATSTN
00737  44 1263  230  □        □STRAL'BØUTN

00740  50 1306  231  □        □EXFCT'6'AD'1'TEFN
00741  00 1262
00742  00 1261
00743  50 2706  232  □        □EXFØV'6
00744  50 1206  233  □        □BUFØUT'6'AD'1'BØUTN
00745  00 1264
00746  00 1263
00747  50 2206  234  □        □SKPØIN'6

00750  34 0747  235  □        □JP'LØK-1
00751  12 1264  236  □EXSCIN  □ENTAL'ERPISN□INPUT ELEVATIØN PØSITIØN
00752  44 0112  237  □        □STRAL'112
00753  50 1105  240  □        □BUFIN'5'AD'2'ELPØSN
00754  00 1323
00755  00 1322
00756  50 1305  241  □        □EXFCT'5'AD'2'ENWDCN
00757  00 1267

00760  00 1265
00761  50 2705  242  □        □EXFØV'5
00762  34 0761  243  □        □JP'LØK-1
00763  50 3000  244  □ERENTN  □RIL'
00764  12 0113  245  □        □ENTAL'113
00765  02 1246  246  □        □CMAL'TWØN
00766  61 0770  247  □        □JPEQ'EEDIN
00767  50 5640  250  □        □STØP'

00770  12 1322  251  □EEDIN   □ENTAL'ELPØSN
00771  50 4202  252  □        □RSHAL'2
00772  14 1322  253  □        □ADDAL'ELPØSN
00773  02 1247  254  □        □CMAL'P180N
00774  67 0775  255  □        □JPMGR'LØK+2
00775  16 1250  256  □        □SUBAL'P360N
00776  50 6100  257  □        □CPAL'
00777  44 1324  260  □        □STRAL'ECØFTN
```

TABLE A-1. (Continued)

```
01000  12 1317  261  □        ⌹ENTAL'ERØFTN⌹CALCULATE ELEV ERRØR
01001  16 1324  262  □        ⌹SUBAL'EC⌹FTN
01002  44 1267  263  □        ⌹STRAL'EAIRN
01003  44 1270  264  □        ⌹STRAL'EAIRIN
01004  10 1267  265  □        ⌹ENTAU'EAIRN
01005  50 4412  266  □        ⌹SF'100
01006  12 0017  267  □        ⌹ENTAL'17
01007  61 1045  270  □        ⌹JPALZ'ESWJPN

01010  40 1224  271  □        ⌹CL'ELCFGN
01011  50 7201  272  ⌹ELERLN  ⌹ENTICK'1⌹ELEV ERRØR CURVE TABLE LØØKUP
01012  36 0000  273  □        ⌹ENTBK'0
01013  12 1267  274  □        ⌹ENTAL'EAIRN
01014  65 1020  275  □        ⌹JPALP'LØK+4
01015  50 6100  276  □        ⌹CPAL'
01016  44 1271  277  □        ⌹STRAL'ETESTN
01017  34 1021  300  □        ⌹JP'LØK+2

01020  40 1271  301  □        ⌹CL'ETESTN
01021  44 1272  302  □        ⌹STRAL'ETESTN+1
01022  16 1255  303  □        ⌹SUBAL'LIMITN
01023  65 1026  304  □        ⌹JPALP'LØK+3
01024  12 1272  305  □        ⌹ENTAL'ETESTN+1
01025  34 1027  306  □        ⌹JP'LØK+2
01026  12 1255  307  □        ⌹ENTAL'LIMITN
01027  24 1254  310  □        ⌹MULAL'TEN

01030  50 4307  311  □        ⌹RSHA'7
01031  44 1272  312  □        ⌹STRAL'ETESTN+1
01032  32 1272  313  □        ⌹ENTB'ETESTN+1
01033  13 2335  314  □        ⌹ENTALB'ELETBN
01034  10 1271  315  □        ⌹ENTAU'ETESTN
01035  60 1037  316  □        ⌹JPAUZ'LØK+2
01036  50 6100  317  □        ⌹CPAL'
01037  50 4203  320  □        ⌹RSHAL'3

01040  44 1325  321  □        ⌹STRAL'EMJFZN
01041  36 0005  322  □        ⌹CLEAN'6'EEMISN
01042  41 1305
01043  73 1042
01044  34 1065  323  □        ⌹JP'EADVLN
01045  57 1224  324  ⌹ESWJPN ⌹ISK'ELCFGN
01046  34 1052  325  □        ⌹JP'ELESIN
01047  50 4401  326  □        ⌹SF'1
```

TABLE A-1. (Continued)

```
01050  12 0017  327  □        □ENTAL'17
01051  63 1011  330  □        □JPALNZ'ELERLN
01052  70 0001  331  □ELESIN  □ENTALR'1
01053  44 1224  332  □        □STRAL'ELCFGN
01054  12 1267  333  □□CØMCØN □ENTAL'EAIRN□CØMPLETE ELEV CØNTRØLLER
01055  24 1326  334  □        □MULAL'STLIN
01056  50 4314  335  □        □RSHA'12D
01057  44 1305  336  □        □STRAL'EEHISN

01060  24 1300  337  □        □MULAL'EACØFN
01061  50 4310  340  □        □RSHA'8D
01062  14 1312  341  □        □ADDAL'EHISTN+2
01063  44 1310  342  □        □STRAL'EHISTN
01064  50 4207  343  □        □RSHAL'7
01065  14 1236  344  □EADVLN  □ADDAL'EVELCN□ADDS VEL TØ ELEV M(Z)
01066  24 1262  345  □        □MULAL'PKN
01067  50 4307  346  □        □RSHA'7

01070  76 1203  347  □        □RJP'ATSTN
01071  44 1174  350  □        □STRAL'EBØUTN
01072  50 1306  351  □        □EXFCT'6'AD'1'ELEFN
01073  00 1176
01074  00 1175
01075  50 2706  352  □        □EXFØV'6
01076  50 1206  353  □        □BUFØUT'6'AD'1'EBØUTN
01077  00 1175

01100  00 1174
01101  50 2206  354  □        □SKPØIN'6
01102  34 1101  355  □        □JP'L:'-1
01103  12 1273  356  □TRPDZN  □ENTAL TEHISN+1□TRAIN PARTIAL CØNT CALC
01104  44 1274  357  □        □STRAL'TEHISN+2
01105  12 1272  360  □        □ENTAL'TEHISN
01106  44 1273  361  □        □STRAL'TEHISN+1
01107  24 1177  362  □        □MULAL'ACØEFN+1□A1 TIMES E(N-1)

01110  50 4310  363  □        □RSHA'8D
01111  44 1277  364  □        □STRAL'THISTN+2
01112  12 1274  365  □        □ENTAL'TEHISN+2
01113  24 1200  366  □        □MULAL'ACØEFN+2
01114  50 4310  367  □        □RSHA'8D
01115  14 1277  370  □        □ADDAL'THISTN+2
01116  44 1277  371  □        □STRAL'THISTN+2
01117  12 1275  372  □        □ENTAL'THISTN
```

TABLE A-1. (Continued)

```
01120  24 1201  373  □        □MULAL'BCØEFN□B1 TIMES M(Z)
01121  50 4317  374  □        □RSHA'15D
01122  50 6100  375  □        □CPAL'
01123  14 1277  376  □        □ADDAL'THISTN+2
01124  44 1277  377  □        □STRAL'THISTN+2
01125  12 1276  400  □        □ENTAL'THISTN+1
01126  24 1202  401  □        □MULAL'BCØEFN+1
01127  50 4317  402  □        □RSHA'15D

01130  50 6100  403  □        □CPAL'
01131  14 1277  404  □        □ADDAL'THISTN+2
01132  44 1277  405  □        □STRAL'THISTN+2
01133  12 1275  406  □        □ENTAL'THISTN
01134  44 1276  407  □        □STRAL'THISTN+1
01135  12 1306  410  □ELPDZN  □ENTAL'EEHISN+1□ELEV PARTIAL CØNT CALC
01136  44 1307  411  □        □STRAL'EEHISN+2
01137  12 1305  412  □        □ENTAL'EEHISN

01140  44 1306  413  □        □STRAL'EEHISN+1
01141  24 1301  414  □        □MULAL'EACØFN+1
01142  50 4310  415  □        □RSHA'8D
01143  44 1312  416  □        □STRAL'EHISTN+2
01144  12 1307  417  □        □ENTAL'EEHISN+2
01145  24 1302  420  □        □MULAL'EACØFN+2
01146  50 4310  421  □        □RSHA'8D
01147  14 1312  422  □        □ADDAL'EHISTN+2

01150  44 1312  423  □        □STRAL'EHISTN+2
01151  12 1310  424  □        □ENTAL'EHISTN
01152  24 1303  425  □        □MULAL'EBCØFN
01153  50 4317  426  □        □RSHA'15D
01154  50 6100  427  □        □CPAL'
01155  14 1312  430  □        □ADDAL'EHISTN+2
01156  44 1312  431  □        □STRAL'EHISTN+2
01157  12 1311  432  □        □ENTAL'EHISTN+1

01160  24 1304  433  □        □MULAL'EBCØFN+1
01161  50 4317  434  □        □RSHA'15D
01162  50 6100  435  □        □CPAL'
01163  14 1312  436  □        □ADDAL'EHISTN+2
01164  44 1312  437  □        □STRAL'EHISTN+2
01165  12 1310  440  □        □ENTAL'EHISTN
01166  44 1311  441  □        □STRAL'EHISTN+1
01167  55 0557  442  □        □1JP'EXECTN
```

TABLE A-1. (Continued)

```
01170  00 0000  443  □MØDJPN □0'
01171  00 0000  444  □VARCØN □0'□SAMPLES PER SECØND
01172  00 0000  445  □MZVELN □0'□TRAIN M(Z) PLUS VELØCITY, SF7
01173  00 0000  446  □       □0'
01174  00 0000  447  □EBØUTN □0'
01175  00 0004  450  □ELEFN  □4'□DA NØ 3
01176  10 0000  451  □ACØEFN □100000'□A0 SF 15
01177  61 4642  452  □       □614642'□A1 SF 15

01200  06 3636  453  □       □063636'□A2 SF 15
01201  60 3115  454  □BCØEFN □603115'□B1 SF 15
01202  07 4702  455  □       □074702'□B2 SF 15
01203  00 0000  456  □ATSTN  □0'□ØVERFLØW SUBRØUTINE
01204  65 1210  457  □       □JPALP'LØK+4
01205  50 6100  460  □       □CPAL'
01206  44 1223  461  □       □STRAL'AFLGN
01207  34 1211  462  □       □JP'LØK+2

01210  40 1223  463  □       □CL'AFLGN
01211  02 1222  464  □       □CMAL'AKØN
01212  65 1220  465  □       □JPMLEQ'LØK+6
01213  10 1223  466  □       □ENTAU'AFLGN
01214  62 1216  467  □       □JPAUNZ'LØK+2
01215  55 1203  470  □       □IJP'ATSTN
01216  50 6100  471  □       □CPAL'
01217  55 1203  472  □       □IJP'ATSTN

01220  12 1222  473  □       □ENTAL'AKØN
01221  34 1213  474  □       □JP'LØK-6
01222  01 4400  475  □AKØN   □14400'
01223  00 0000  476  □AFLGN  □0'
01224  00 0000  477  □ELCFGN □0'
01225  00 0000  500  □EMZVLN □0'□ELEV M(Z) PLUS VEL,SF7
01226  00 0000  501  □VTEMPN □0'
01227  00 0000  502  □       □0'

01230  00 0000  503  □VFLAGN □0'
01231  00 3400  504  □VSIZEN □3400'
01232  00 0000  505  □VELØCN □0'□FILTERED VELØCITY
01233  00 0000  506  □       □0'
01234  00 0000  507  □EFLAGN □0'
01235  00 4500  510  □ESIZEN □4500'
01236  00 0000  511  □EVELCN □0'
01237  34 0617  512  □IRPISN □JP'REENTN
```

TABLE A-1. (Continued)

```
01240  00 0001  513  □REQCØN  □200001'
01241  00 0000  514  □        □0'
01242  00 0000  515  □INPOSN  □0'
01243  00 0002  516  □        □0'
01244  10 0400  517  □INWDCN  □100400'
01245  00 1000  520  □        □001000'
01246  00 0002  521  □TWON    □000002'
01247  05 5000  522  □P180N   □250400'

01250  13 2000  523  □P360N   □460800'
01251  00 0000  524  □AIRN    □0'□LATEST ERRØR
01252  00 0000  525  □AIRIN   □0'
01253  00 0200  526  □ØONEN   □128D'□1 SF7
01254  00 0012  527  □TEN     □10D'
01255  01 4363  530  □LIMITN  □63870'□49.9 DEGREES
01256  00 0000  531  □TESTN   □0'□SIGN FLAG STØRAGE
01257  00 0000  532  □        □0'

01260  00 0000  533  □NØFZN   □0'□M(Z) SF7
01261  00 0002  534  □TEFN    □2'□DA NØ. 2
01262  00 2400  535  □PKN     □2400'
01263  00 0000  536  □3CUTN   □0'
01264  54 0763  537  □ERPISN  □JP'ERENTN
01265  11 0400  540  □ENWDCN  □110400'
01266  00 1100  541  □        □001100'
01267  00 0000  542  □EAIRN   □0'

01270  00 0000  543  □EAIRIN  □0'
01271  00 0000  544  □ETESTN  □0'
01272  00 0000  545  □TEHISN  □0'
01273  00 0000  546  □        □0'□SF7
01274  00 0000  547  □        □0'□SF7
01275  00 0000  550  □THISTN  □0'
01276  00 0200  551  □        □0'□SF14
01277  00 0000  552  □        □0'□ØØRKING CELL

01300  10 0000  553  □EACOFN  □100000'
01301  61 4642  554  □        □614642'
01302  06 3656  555  □        □063656'
01303  60 3115  556  □E3COFN  □603115'
01304  07 4702  557  □        □074702'
01305  00 0000  560  □EEHISN  □0'
01306  00 0000  561  □        □0'
01307  00 0000  562  □        □0'
```

TABLE A-1. (Continued)

```
01310  00 0000  563  ØEHISTN  ØØ'
01311  00 0000  564  Ø        ØØ'
01312  00 0000  565  Ø        ØØ'
01313  00 0000  566  ØRØFTN   ØØ'
01314  00 0000  567  ØRØFTIN  ØØ'
01315  00 0000  570  ØEVTMPN  ØØ'
01316  00 0000  571  Ø        ØØ'
01317  00 0000  572  ØERØFTN  ØØ'

01320  00 0000  573  Ø        ØØ'
01321  00 0000  574  ØCØFTN   ØØ'
01322  00 0000  575  ØELPØSN  ØØ'
01323  00 0000  576  Ø        ØØ'
01324  00 0000  577  ØECØFTN  ØØ'
01325  00 0000  600  ØEMØFZN  ØØ'
01326  00 5443  601  ØSTLIN   Ø3363Ø'

01350  00 0000  602  ØTETA3N  ØØ'ØTRAIN ERRØR CURVE TABLE
02335  00 0000  603  ØELET3N  ØØ'ØELEV ERRØR CURVE TABLE
..
00 7743
*
```