UNCLASSIFIED

AD NUMBER
ADA801457
CLASSIFICATION CHANGES
TO: **UNCLASSIFIED**
FROM: **RESTRICTED**
LIMITATION CHANGES
TO: **Approved for public release; distribution is unlimited. Document partially illegible.**
FROM: **Distribution authorized to U.S. Gov't. agencies and their contractors; Administrative/Operational Use; 13 SEP 1945. Other requests shall be referred to Office of Scientific Research and Development, Washington, DC 20301. Document partially illegible.**
AUTHORITY
OSRD list no. 5 dtd 21-25 Jan 1946; OTS index dtd Jun 1947

THIS PAGE IS UNCLASSIFIED

Reproduced by

AIR DOCUMENTS DIVISION

TECHNICAL INTELLIGENCE

AMC

HEADQUARTERS AIR MATERIEL COMMAND

WRIGHT FIELD, DAYTON, OHIO

The U.S. GOVERNMENT

IS ABSOLVED

FROM ANY LITIGATION WHICH MAY ENSUE FROM THE CONTRACTORS INFRINGING ON THE FOREIGN PATENT RIGHTS WHICH MAY BE INVOLVED.

WRIGHT FIELD, DAYTON, OHIO

REEL - C

1310

A.T.I.

307000

RESTRICTED

Division 9
NATIONAL DEFENSE RESEARCH COMMITTEE
of the
OFFICE OF SCIENTIFIC RESEARCH AND DEVELOPMENT

THE STAINLESS-STEEL PROPANE INJECTOR

to
February 28, 1945
by
Arnold O. Beckman, James D. McCullough, and Robert A. Crane

Report OSRD No. 6042
Copy No. 40
Date: September 13, 1945

Copy Nos.
1-7 Dr. Irvin Stewart
8-21 OSRD Liaison Office
22 Office of the Chief, Chemical Warfare Service
Technical Division, Washington 25, D. C.
23-26 Commanding General, Chemical Warfare Service
Technical Command, Edgewood Arsenal, Maryland
27 Director, Naval Research Laboratory
28 Medical Division, Office of the Chief, CWS
29 Office of the Chief, CWS, Technical Division
Attention: Information Division
Lt. Hilbert Sloan
30 Dr. Walter R. Kirner (Division 9 Files)
31 Dr. Carl Niemann

Total Number of Copies - 40

This document contains information affecting the national defense of the United States within the meaning of the Espionage Act, U.S.C. 50; 31 and 32. Its transmission or the revelation of its contents in any manner to an unauthorized person is prohibited by law.

RESTRICTED

RESTRICTED

OSRD No. 6042

Division 9
NATIONAL DEFENSE RESEARCH COMMITTEE
of the
OFFICE OF SCIENTIFIC RESEARCH AND DEVELOPMENT

THE STAINLESS-STEEL PROPANE INJECTOR

Service Directive: CWS-6

Endorsement (1) Carl Niemann, Member, Division 9 to Dr. Walter R. Kirner, Chief, Division 9.

Forwarding report and noting:

> "The stainless-steel injector is a compact, light-weight unit which operates on liquefied petroleum gas. This eliminates the need of an air compressor and the use of stainless steel reduces the amount of corrosion attributable to acetic acid from bubbler samplers. The most promising use of this device is for sampling with impacting samplers for aerosols."

(2) from Walter R. Kirner, Chief, Division 9 to Dr. Irvin Stewart, Executive Secretary of the National Defense Research Committee.

Forwarding report and concurring:

This is a progress report under Contract 9-355, OEMsr-674 with Arnold C. Bookman.

RESTRICTED

The Stainless-steel Propane Injector

by

Arnold O. Beckman

James D. McCullough

Robert A. Crane

Pasadena, California

February 28, 1945

Table of Contents

Abstract _____ iii

Introduction _____ 1.

Experimental _____ 1.

Performance _____ 2.

Fuel Consumption _____ 2.

Suction Developed _____ 2.

Flow-rates Obtainable _____ 3.

Efficiency of the Injector _____ 3.

Size of Fuel Tank Required _____ 3.

Abstract

A compact, light-weight, stainless-steel injector unit has been developed which operates on liquefied petroleum gas. The use of liquefied petroleum gas eliminates the necessity for an air compressor while the use of stainless-steel greatly reduces the corrosion which otherwise results when acetic acid is used in the bubblers.

The Stainless-steel Propane Injector

Introduction

Compressed-air operated aspirators have been used at a number of experimental stations for aspirating air through the bubblers used in estimating the concentration of C. W. agents in the atmosphere. For the aspirators to operate over a reasonably long period at a flow rate of 5-20 liters per minute, either an inconveniently large low-pressure tank or a smaller high-pressure tank is required. Small high-pressure tanks are customarily used, which require a multi-stage compressor. For field use this arrangement is cumbersome and apt to require considerable attention. Furthermore, the use of brass or bronze aspirators with bubblers filled with 50% acetic acid has caused troublesome corrosion especially in the jet.

In the development of the Beckman H-recorder, a small stainless-steel aspirator was designed which operated on liquefied petroleum gas. This development suggested the possible use of liquefied propane or butane for drawing air samples through the bubblers used in field experiments, which would eliminate the necessity for the air compressor and reduce corrosion problems. A suitable aspirator for this purpose is described in this report.

Experimental

The aspirator unit is an adaptation of the Morton injector which has been in use for some time by British and Canadian investigators. To determine the optimum jet and throat diameters, three different jets and three different throats were made up, after studying a report on the British injector. The nine combinations were tested experimentally, using a propane-butane mixture. The combination which gave the

maximum efficiency through a Porton bead-filled bubbler containing 20 cc. of 50% acetic acid was selected for production.

A flow-rate of 5-20 liters per minute was originally specified. Recently there has been a tendency at some stations to use lower flow-rates. Although the aspirator will perform satisfactorily at flow-rates under 5 liters per minute, its efficiency under load is not as great as it is in the range for which the aspirator was originally designed.

A cross-section of the aspirator is shown in Figure 1, and the complete unit is shown in Figure 2. The unit includes the aspirator, a pressure regulator, a gas filter, a 0-30 p.s.i. gauge to indicate the jet pressure and a 0-250 p.s.i. gauge to indicate the pressure in the supply tank.

Performance

The following performance tests were carried out using a commercial, liquefied petroleum gas having an apparent molecular weight of 50. This corresponds roughly to a mixture 50% by weight propane and 50% butane. The composition changes during use, of course, becoming richer in butane.

Fuel Consumption. The fuel consumption varies with the jet pressure employed and is shown graphically in Figure 3. The fuel consumption is given both in terms of pounds (avoirdupois) of fuel per hour and in terms of liters of gas (S.T.P.) per minute.

Suction Developed. The suction produced with various jet pressures was measured at zero air-flow by connecting a mercury manometer directly to the suction side of the aspirator. The data obtained are shown in Figure 4.

Flow-rates Obtainable. The rate at which air is pumped by the aspirator is a function of both the jet pressure and the load (resistance) in the suction line. The flow through a Porton bubbler filled with glass beads and containing 20 cc. of 50% acetic acid is shown as a function of jet pressure in Figure 5.

After the aspirators had been completed, their possible use in connection with the Cascade Impactor was suggested. Since no impactor was available for test, one was simulated by means of an adjustable valve in the suction line using the data on the impactor furnished by Capt. Hoeser of the C.W.S. The valve was set so that the pressure drop across it was the same at each flow-rate as in the impactor. One setting actually gave a load which had characteristics closely conforming to the real impactor. With this simulated impactor in the suction line, flow-rates were measured as a function of jet pressure. The results are shown in Figure 6.

The Efficiency of the Aspirator. The efficiency of the aspirator varies with the load and the flow-rate used. The efficiency, expressed as the gas-flow (both at the same conditions of pressure and temperature), is plotted as a function of jet pressure in Figure 7. Curve A shows the efficiency through the Porton bubbler and Curve B gives efficiency data when used with the simulated Cascade Impactor.

Size of Fuel Tank Required. In estimating the size of fuel tank required, special attention must be given to the flow-rates, to the composition of the liquid fuel and to the temperature to which the tank

will be subjected. At higher flow-rates a larger tank is needed, not only because the fuel is consumed more rapidly but also because of the greater refrigerating effect and the accompanying drop in gauge pressure. To insure good pressure regulation, the gauge pressure should not be permitted to drop below a value twice the jet pressure employed. For jet pressures under 5 p.s.i., a tank holding 10 lbs of the liquid fuel should be large enough but a 25 lb. (or larger) tank is recommended if higher jet pressures are required.

RESTRICTED

Figure 1

Stainless Steel Injector

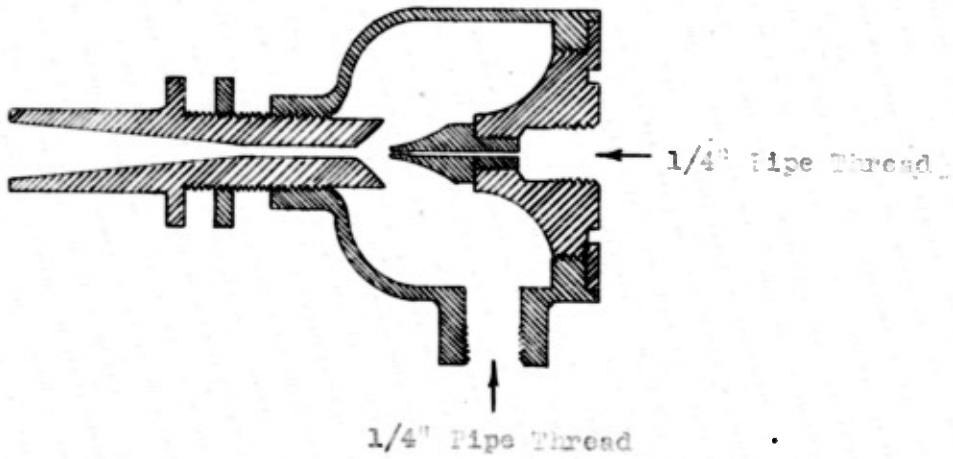

Figure 2

Stainless-steel Injector Unit

RESTRICTED

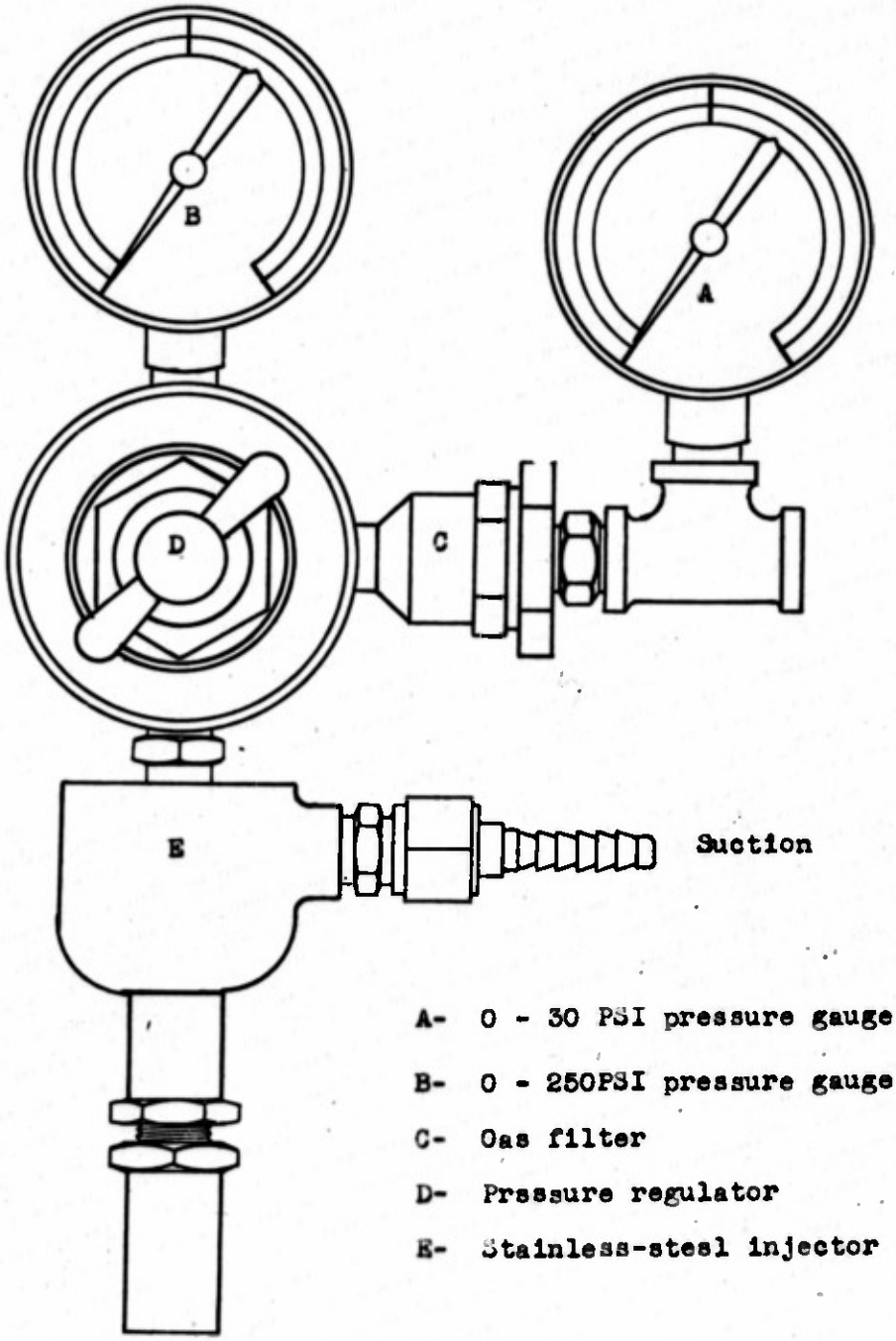

A- 0 - 30 PSI pressure gauge

B- 0 - 250PSI pressure gauge

C- Gas filter

D- Pressure regulator

E- Stainless-steel injector

RESTRICTED

Figure 3

Gas Consumption of Injector
as a function of
Jet Pressure

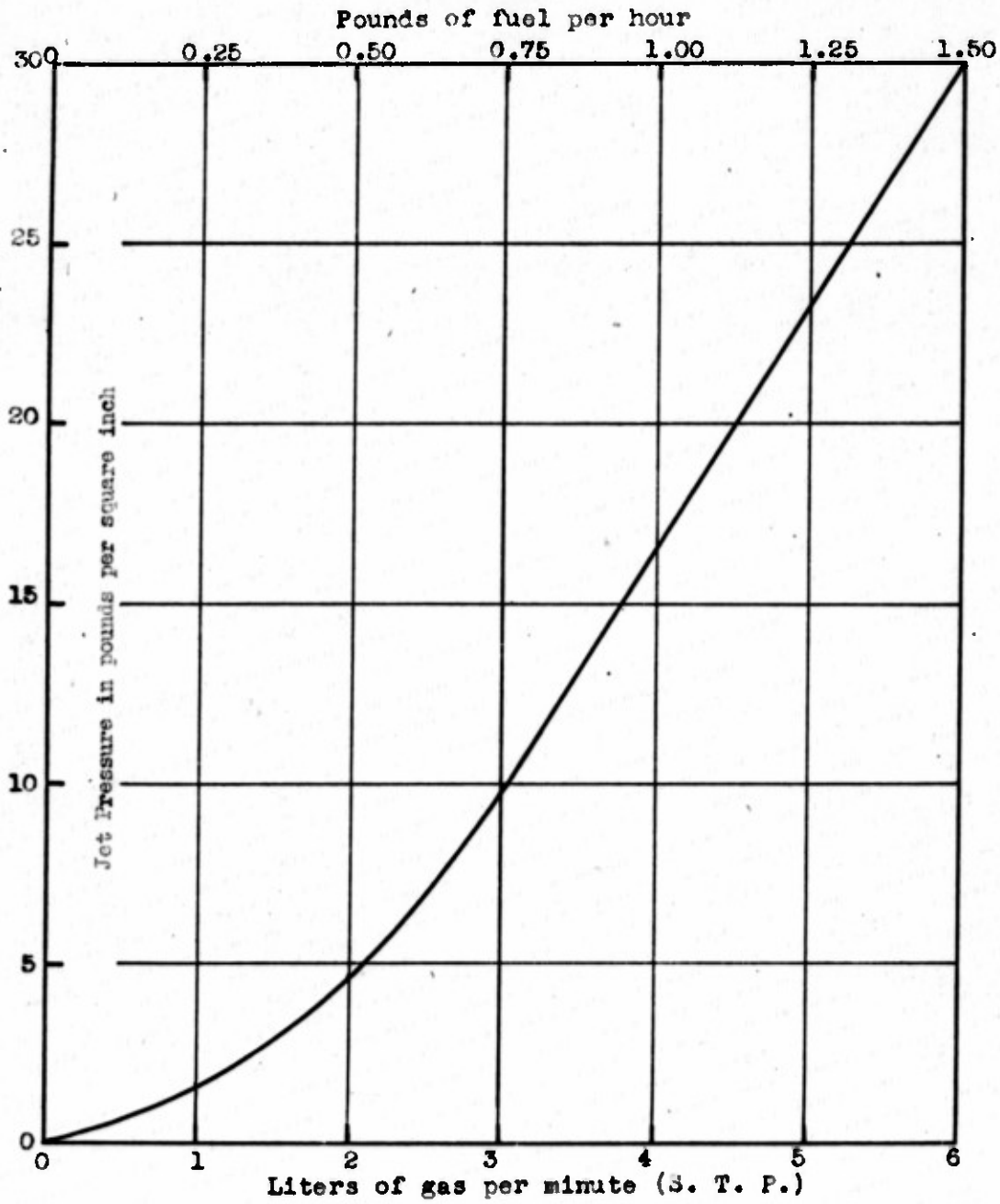

Figure 4

Suction Produced
as a function of
Jet Pressure

RESTRICTED

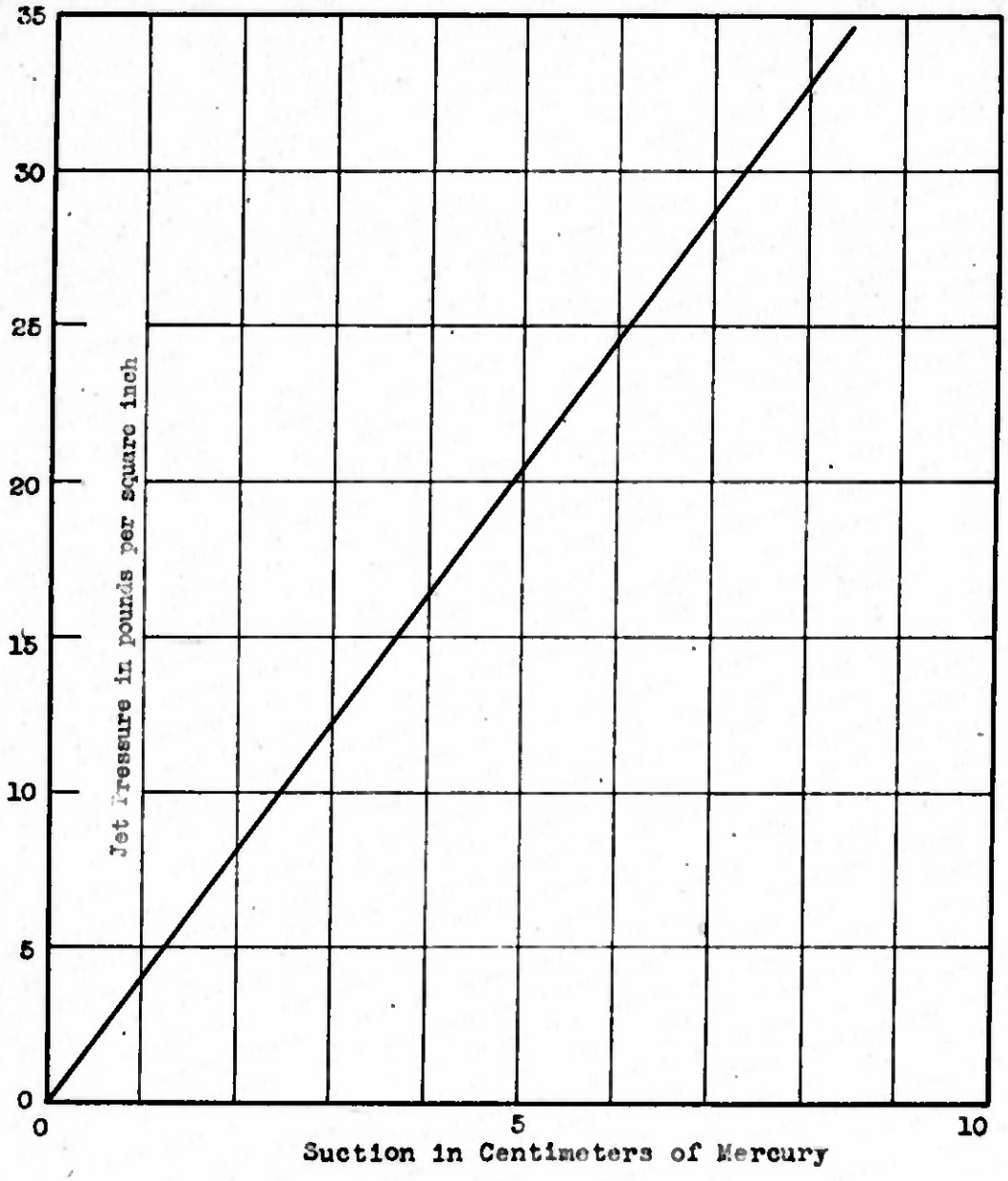

Figure 5

Air-flow through Porton Bubbler
as a function of
Jet Pressure

RESTRICTED

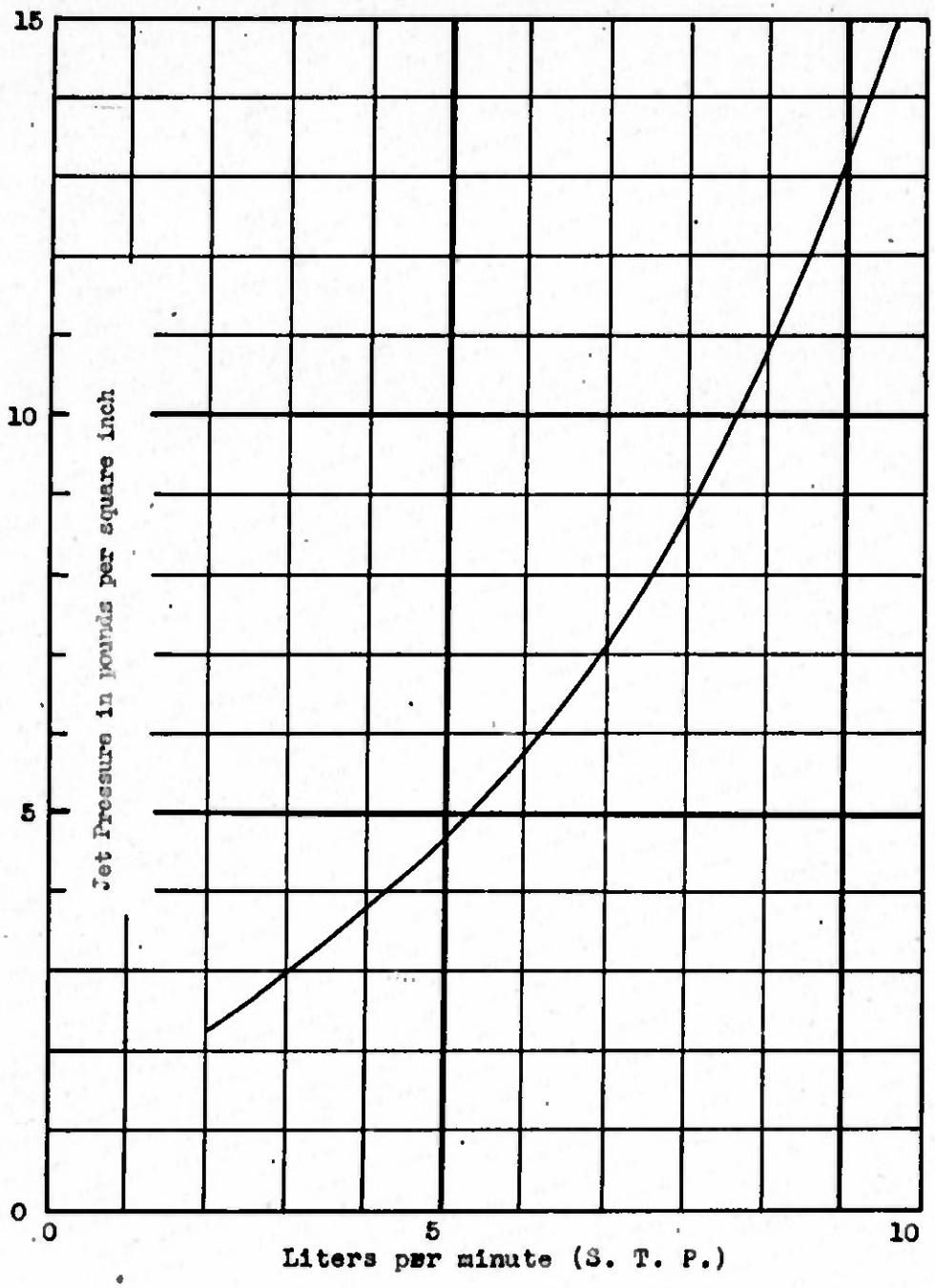

RESTRICTED

Figure 6

Air-flow through Simulated Cascade Impactor
as a function of
Jet Pressure

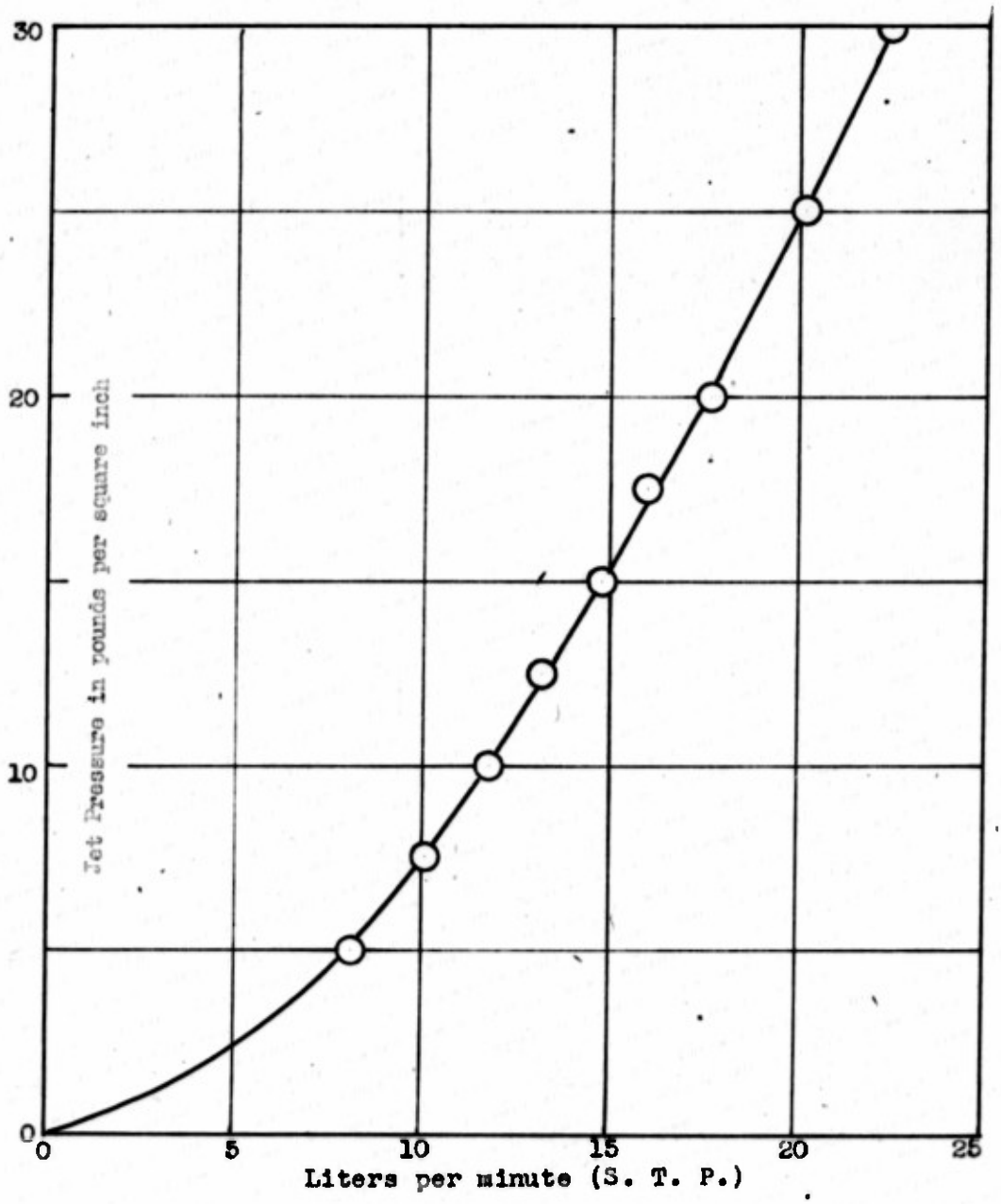

RESTRICTED

Figure 7

Efficiency of Injector
as a function of
Jet Pressure

A- Through Porton Bubbler

B- Through Simulated Cascade Impactor

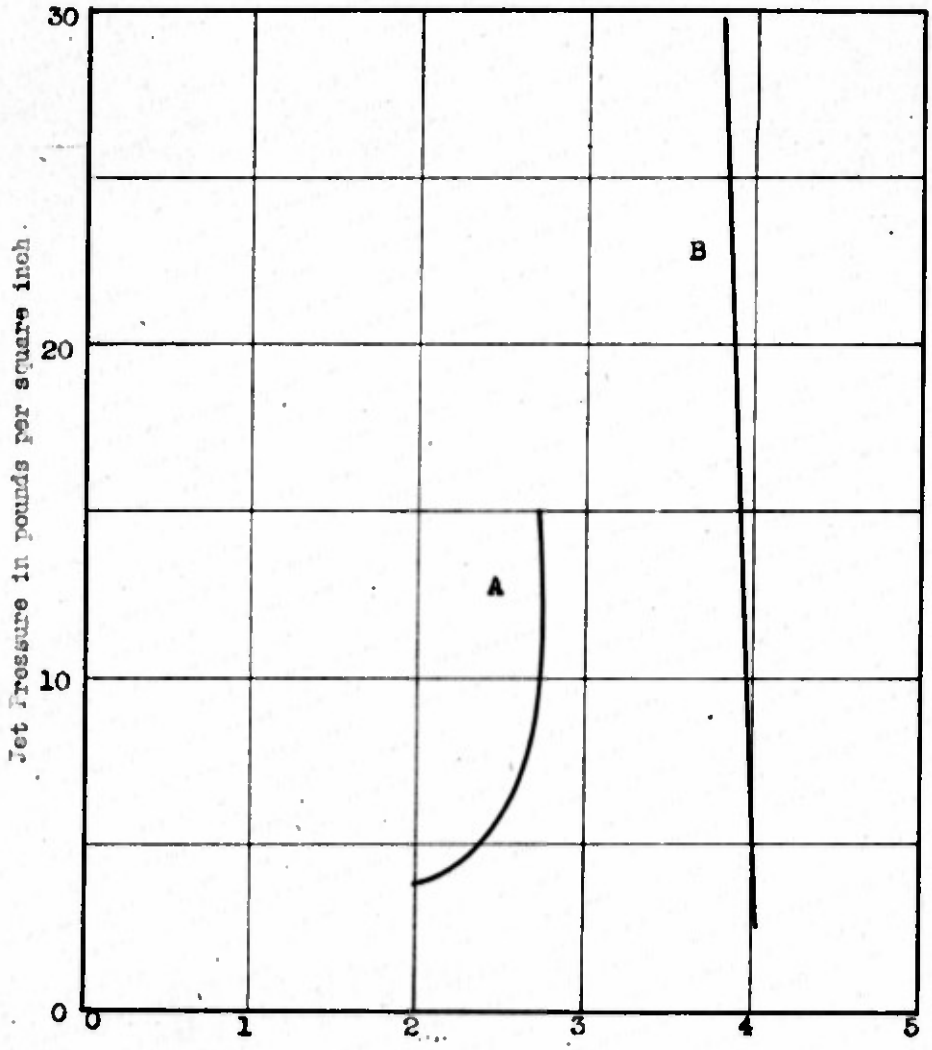

Efficiency (Air-flow/Gas-flow) STP

REEL – C
1310
A.T.I.
307000

TITLE: The Stainless-Steel Propane Injector

AUTHOR(S): Beckman, Arnold O.; McCullough, James; Crane, Robert

ORIGINATING AGENCY: (Not known)

PUBLISHED BY: Office of Scientific Research and Development, NDRC, Div. 9

OVER

ATI- 30700

REVISION (None)

ORIG. AGENCY NO. (None)

PUBLISHING AGENCY NO. OSRD-6042

DATE	DOC. CLASS.	COUNTRY	LANGUAGE	PAGES	ILLUSTRATIONS
Sept '45	Unclass.	U.S.	Eng.	11	graphs

ABSTRACT:

The stainless-steel injector is a compact, light-weight unit which operates on liquefied petroleum gas, eliminating the need of an air compressor; and the stainless-steel reduces the amount of corrosion attributable to acetic acid from bubbler samples. The unit includes the aspirator, a pressure regulator, gas filter, 0-30 psi gauge to indicate the jet pressure, and a 0-250 psi gauge for supply tank pressure. To determine the optimum jet and throat diameters, three different jets, and three different throats were made up; and the nine combinations were tested experimentally using a propane-butane mixture. A cross-section of the aspirator, and a drawing of the complete unit are given. The most promising use of the device is for sampling with impacting samplers for aerosols.

DISTRIBUTION: Copies of this report obtainable from Air Documents Division; Attn: MCIDXD

DIVISION: ~~Ordnance and Armament (22)~~ 57

SECTION: ~~Chemicals and Incendiaries (11)~~

SUBJECT HEADINGS:
Gases, Poisonous - Detection (44510.5)

ATI SHEET NO.: R-22-11-29

UNCLASSIFIED PER AUTHORITY
OSRD LIST # 5, DTD 21-25 Jan 46