UNCLASSIFIED

AD NUMBER
ADA801441
LIMITATION CHANGES
TO: **Approved for public release; distribution is unlimited.**
FROM: **Distribution authorized to DoD only; Administrative/Operational Use; 09 SEP 1946. Other requests shall be referred to National Aeronautics and Space Administration, Washington, DC. Pre-dates formal DoD distribution statements. Treat as DoD only.**
AUTHORITY
NASA TR Server website

THIS PAGE IS UNCLASSIFIED

AUG 30 1946 CLASSIFICATION CANCELLED RM-SE6H20

Source of Acquisition
CASI Acquired

NACA

RESEARCH MEMORANDUM

for the

Air Materiel Command, Army Air Forces

INVESTIGATION OF THREE DESIGN MODIFICATIONS OF THE NACA INJECTION IMPELLER IN AN R-3350 ENGINE

By

Robert O. Hickel and Donald J. Michel

Aircraft Engine Research Laboratory
Cleveland, Ohio

FILE COPY
To be returned to the files of the National Advisory Committee for Aeronautics Washington, D. C.

CLASSIFICATION CANCELLED
Authority Dir., Aeron. Research NACA Date
By
See 1445

Restriction/Classification Cancelled

NATIONAL ADVISORY COMMITTEE FOR AERONAUTICS

WASHINGTON

SEP 9 1946

(Inactive)

CLASSIFICATION CANCELLED

 RESTRICTED CLASSIFICATION CANCELLED

NATIONAL ADVISORY COMMITTEE FOR AERONAUTICS

RESEARCH MEMORANDUM

for the

Air Materiel Command, Army Air Forces

INVESTIGATION OF THREE DESIGN MODIFICATIONS OF THE NACA INJECTION IMPELLER IN AN R-3350 ENGINE

By Robert O. Hickel and Donald J. Michel

SUMMARY

An investigation was conducted to determine the effects of three design modifications of the original NACA injection impeller on the performance of an R-3350 engine. Different methods of injecting the fuel into the impeller air stream were studied and evaluated from the individual cylinder fuel-air ratios and the resulting cylinder temperatures. Each impeller was tested for a range of engine powers normally used in flight operation.

The relatively simple design of the original injection impeller produced approximately the same mixture- and temperature-distribution characteristics as the modified impellers of more complex design. None of the modifications appreciably affected the manifold pressure, the combustion-air flow, nor the throttle angle required to maintain a given engine power.

INTRODUCTION

A general investigation of means of improving the cooling of the R-3350 engine was conducted at the NACA Cleveland laboratory at the request of the Air Materiel Command, Army Air Forces. Definite cooling improvements can be obtained by an improvement in the fuel distribution from the use of the NACA injection impeller in place of a standard nozzle bar. (See reference 1.) The hydraulic characteristics of several impeller fuel-injection passage designs were investigated and the results were reported in reference 2. Bench tests showed that these passages provided sufficient flow capacity without appreciable leakage at the collector cup.

CLASSIFICATION CANCELLED RESTRICTED

A full-scale engine test-stand investigation of three design modifications of the original injection impeller described in reference 1 was made to determine if improvement over the mixture distribution obtained with the original injection impeller could be realized by use of a modified impeller and to determine the effect of each impeller modification on the fuel-air ratio and temperature distribution of the engine. Each design modification incorporated a different method of injecting the fuel into the combustion-air stream. The impeller design changes were intended to promote more thorough atomization of the fuel at the exit of the impeller fuel passage and thus promote better fuel dispersion. Each type of injection impeller was tested for a range of engine speeds and powers normally used in flight operation. The effects of the original injection impeller and the three modifications on the mixture and temperature distributions are shown by comparisons of the fuel-air ratio, the temperature of the rear spark-plug gasket and the temperature of the exhaust-valve seat for the individual cylinders.

DESCRIPTION OF NACA INJECTION IMPELLER

A sketch of the original injection impeller designed for the R-3350 engine is shown in figure 1. This impeller is hereinafter designated impeller A. Metered fuel from the carburetor is supplied to the nozzle ring through two fuel-transfer tubes. The fuel is transferred from the nozzle ring to the collector cup, which rotates at impeller speed. The fuel is pumped through the collector cup by the action of the fuel inducer vanes into the impeller-transfer passages and is then pumped by centrifugal force into the fuel-distribution annulus that acts as an equalization chamber. As a result of centrifugal force, the fuel then flows through the fuel-injection passages into the air stream of the impeller. A complete description of the NACA injection impeller is given in references 1 and 2. For all tests, a slotted nozzle ring with 24 holes and a long-vaned fuel inducer with 16 vanes were used. The nozzle ring and fuel inducer were designed (reference 2) to reduce the leakage of fuel upstream of the impeller.

Impeller A. - The original injection impeller of reference 1 (fig. 1) incorporates fuel-injection passages of 1/16-inch diameter that discharge in alternate impeller air channels. The fuel-injection passages are slightly inclined from a radial position toward the advancing side of the impeller blade. The fuel passage was so inclined that the fuel droplets would be struck and dispersed by the advancing impeller blade.

Although the original injection impeller improved the mixture distribution considerably over that obtained with the standard carburetor nozzle-bar injection system (reference 1), better atomization of the fuel at the outlet of the fuel-injection passages would lead to even better mixture- and temperature-distribution patterns. In an attempt to promote better dispersion of the fuel, three modifications were made to the fuel-injection passages of the original injection impeller and are designated impellers B, C, and D. These modifications involved no changes in the nozzle ring, the fuel inducer, the collector cup, or the impeller-transfer passages. A schematic diagram of each of the impeller modifications for an R-3350 engine is shown in figure 2.

Impeller B. - The modification of original impeller A is shown in figure 2(a). Radial fuel-injection passages in each impeller air channel, of 1/16-inch diameter, extend from the fuel-distribution annulus to a point about $4\frac{3}{4}$ inches from the center of the impeller. Each of these passages is met by another 1/16-inch-diameter passage drilled in each blade at a 25° angle from the rear shroud of the impeller. This second passage decreases in size to 1/32-inch diameter to form an orifice before entering a diagonal fuel-discharge passage 1/8 inch in diameter drilled through the blade at an angle of 60°. With this design, the fuel was intended to strike the diagonal fuel passage and disperse in a fine spray; about three-fourths of the fuel would be ejected from the advancing side of the blade while the other one-fourth would be ejected from the trailing side of the blade. The passages drilled from the rear shroud of the impeller were left open and may have permitted air to circulate through the passages. Air may also have circulated through the diagonal fuel passages from the high-pressure side to the low-pressure side of the blades.

Impeller C. - Impeller C uses the same type fuel-injection passages as original impeller A. The fuel-discharge passages, however, are located in each impeller air passage rather than in alternate passages. Fuel-dispersion pins 5/64 inch high are located at the exit of the fuel passage as shown in figure 2(b). In this design the fuel was intended to impinge on the dispersion pin and be finely dispersed and forced across the air passage where it would mix with the impeller air stream.

Impeller D. - Impeller D incorporates radial fuel-injection passages, which discharge in the blades as in impeller B. These passages, however, were drilled into alternate blades rather than in every blade. Each radial passage is met by a 1/16-inch-diameter passage drilled from the rear of the impeller at a 75° angle, as shown in figure 2(c). Two 0.010-inch-diameter orifices were drilled

into the low-pressure side of the blade to meet the 1/16-inch-diameter inclined passages. These orifices are located 3/8 inch apart and consequently are at slightly different radii (0.084 in. difference) from the center of the impeller. Overflow holes of 1/16-inch diameter are provided about $2\frac{3}{4}$ inches from the center of the impeller by drilling from the rear shroud into the radial fuel-injection passage and through the front face. All the passages drilled into the rear shroud were plugged.

This impeller was intended to eject all the fuel from the 0.010-inch orifices. Because the orifices are on slightly different radii, it was expected that fuel would be ejected from the orifice nearest the impeller tip at low fuel flows and, as the fuel flow increases, fuel would eventually be ejected from both orifices. The overflow holes are provided in order that fuel can be distributed if the orifices become clogged with sludge or dirt or if they are too small to provide sufficient fuel flow in the higher power ranges.

APPARATUS

The tests were made with an R-3350-23A engine installed in a test cell as shown in figure 3. A standard Ceco 58 CPB-4 carburetor was used for the tests. The fuel used for all tests conformed to specification AN-F-28. The combustion-air induction system, the propeller, and the torquemeter were the same as described in reference 1. Combustion-air pressure and temperature were controlled by an external system (reference 1). The tests were made with the engine fitted with a ring cowling. Each cylinder exhausted directly to the atmosphere through relatively short exhaust stacks (fig. 3). The cooling air was drawn across the engine by a controllable suction system.

Temperatures were measured on each cylinder at the rear spark-plug gasket and the exhaust-valve seat. (See fig. 3 of reference 1.) Cooling-air temperature was measured by three thermocouples located at the cowling inlet. Combustion-air temperature was measured by three thermocouples located on the screen immediately upstream of the carburetor.

The cooling-air pressure drop across the engine was considered to be the difference between the total pressure at the top of the cylinder head at the baffle entrance and the static pressure behind the baffle sealing ring of the rear-row cylinders. The value used for the cooling-air pressure drop was the measured value corrected to sea-level Army summer air density of 0.0022 slug per cubic foot upstream of the cylinder.

In the tests of impellers A and D, the fuel-air ratios of the individual cylinders were determined by the use of the NACA mixture analyzer. This analyzer operates on the carbon-dioxide content of oxidized exhaust gases and uses a thermal-conductivity bridge by allowing the oxidized gases to pass over the two cells of a Wheatstone bridge while the other two cells hold a gas of constant thermal conductivity. The unbalance is then indicated on a millivoltmeter calibrated by Orsat analysis of oxidized exhaust gases. For impellers B and C the fuel-air ratios of the individual cylinders were determined by Orsat analysis. Periodic surveys were made for each cylinder to determine the oxygen dilution of the exhaust-gas samples due to air leakage into the exhaust stack from the atmosphere. The individual fuel-air ratios were then corrected for any oxygen dilution. No dilution was found below 1600 brake horsepower and the greatest dilution for a given cylinder was 2.0 percent oxygen at 2000 brake horsepower, which gave a correction factor of 1.084 for the fuel-air ratio of that particular cylinder.

The absolute manifold pressure was measured at the standard engine location in the intake manifold. The carburetor-deck pressure was measured by a static tube at the upper carburetor deck. The charge-air flow was calculated from measurement of the venturi suction differential pressure and reference to an air-flow calibration curve of the carburetor. The throttle angle was measured by a calibrated position indicator. The fuel flow to the engine was measured by rotameters.

TEST PROCEDURE

In order to compare the effects of the injection-impeller modification on the performance of the engine, similar tests were made for each type of impeller at five powers and speeds that are likely to be used in normal-flight operation.

Because of the influence of fuel-air-ratio distribution on temperature distribution and engine performance, the effects of each injection impeller modification were evaluated by comparing the patterns of fuel-air ratio and temperature distribution, the manifold pressure, the combustion-air flow, and the carburetor throttle angle at a given engine power. The following engine conditions were selected for each test:

Engine power (bhp)	Engine speed (rpm)	Approximate average engine fuel-air ratio	Approximate cooling-air pressure drop, (in. water)
1200	2000	0.071	4.2
1400	2100	.081	5.8
1600	2200	.087	6.6
1800	2300	.090	8.3
2000	2400	.095	8.6

For all tests, the carburetor deck temperature was maintained at 100° F and the deck pressure at atmospheric pressure. The cooling-air pressure drop was selected to maintain the temperature of the rear spark-plug gasket of the hottest cylinder at approximately 450° F for the tests of impeller A. Tests of the modified impellers were then run at the same pressure drops. Because of variations in the cooling-air temperature between tests, all cylinder temperatures were corrected for a cooling-air temperature of 50° F, a mean value of the cooling-air temperatures, by the method presented in reference 3.

Shortly after the rated-power test of impeller C, the engine failed. The failure occurred when two of the impeller-shaft oil-seal rings broke and damaged the impeller tip but left the fuel passages undamaged. Consequently, the patterns of fuel-air ratio and temperature were probably only slightly affected by this failure.

RESULTS AND DISCUSSION

Fuel-air-ratio distribution. - The distribution patterns of fuel-air ratio for impellers A, B, and C, are shown in figure 4. (No data are given for impeller D because the design objective was not realized.) The differences between the maximum and minimum fuel-air ratio (fuel-air-ratio spread) for each impeller are given in the following table:

Engine power (bhp)	Fuel-air-ratio spread		
	Impeller		
	A	B	C
1200	0.011	0.011	0.011
1400	.009	.013	.012
1600	.009	.010	.013
1800	.010	.013	.014
2000	.009	.013	.014

The fuel-air-ratio spreads at a given power were approximately the same for every impeller tested. The maximum difference in spread for all the impellers at any one power was 0.005. Impeller A produced fuel-air-ratio patterns that had the most consistent spreads with a change in power; the spread varied from 0.009 to 0.011 with changes in engine power.

Impellers A, B, and C produced patterns that were similar throughout the range of powers tested (fig. 4). The cylinders that were leaner than the average over-all engine fuel-air ratio were usually cylinders 1 to 10, (the right side of the engine as viewed from the rear) whereas the cylinders richer than the average fuel-air ratio were cylinders 11 to 18 (the left side of the engine). No systematic change in the fuel-air-ratio pattern occurred with changes in power for impellers A, B, and C.

When impeller D was removed from the engine immediately following the tests, it was found that most of the 0.010-inch-diameter orifices were so plugged by sludge or dirt that no fuel flowed through these holes. This clogging caused fuel to flow from the overflow holes provided near the impeller hub and may have caused a nonuniformity of dispersion of fuel in the impeller air streams. Because of this condition, the fuel-air-ratio pattern exhibited a marked change from that produced by the other impellers with cylinders 1 to 10 generally operating richer and the cylinders 11 to 18 operating leaner than the average engine fuel-air ratio, a complete reversal of the pattern produced by the previous impellers. Impeller D was considered unsatisfactory and no data are presented because, with ordinary precautions taken to insure dirt-free fuel, the orifices became clogged and consequently the design objective was not accomplished.

The original injection impeller A, of relatively simple design, produced results that were as good or better than those of the modified impellers of more complex designs. Design factors that critically affect the fuel-distribution characteristics of the injection impeller appear unlikely provided that no fuel-injection passages clog with sludge or dirt.

Temperature distribution. - The temperature patterns for the rear spark-plug gasket and exhaust-valve seat are shown in figures 5 and 6, respectively. Impellers A, B, and C produced temperature spreads of the rear spark-plug gasket that varied from a minimum of 60° F to a maximum of 93° F. The spread for exhaust-valve seat varied from 115° F to 186° F. The temperature spreads of the rear spark-plug gasket and exhaust-valve seat are shown in the following table for each impeller:

Engine power (bhp)	Temperature spread					
	Impeller					
	A		B		C	
	Rear spark-plug gasket (°F)	Exhaust-valve seat (°F)	Rear spark-plug gasket (°F)	Exhaust-valve seat (°F)	Rear spark-plug gasket (°F)	Exhaust-valve seat (°F)
1200	65	131	72	141	63	163
1400	60	115	76	130	79	168
1600	62	117	73	127	93	184
1800	64	118	70	131	69	186
2000	62	117	71	119	79	166

The original impeller A produced temperature spreads that were most consistent with a change of power with a variation of only 5° F for the rear spark-plug gasket and 16° F for the exhaust-valve seat. No systematic change in temperature pattern occurred with changes in power. The temperature patterns for impellers A, B, and C therefore showed spreads and trends similar to those produced by the fuel-air ratio patterns. Impellers B and C produced no important improvement in temperature pattern over impeller A.

General engine performance. - The engine performance characteristics of the various impellers were evaluated by comparing the required manifold pressure, the combustion-air flow, and the throttle angle for each power condition. In general, all impellers presented the same performance characteristics. Because of the small differences in over-all performance of the various impeller designs, impeller A would probably be most desirable inasmuch as the more complex fuel discharge-passage designs gave no significant improvement.

SUMMARY OF RESULTS

The results of testing the original injection impeller and three modifications of this design in an R-3350 engine may be summarized as follows:

1. The relatively simple design of the original injection impeller produced fuel-air-ratio patterns that were equal to or better than those produced by the modified impellers of more complex design.

2. The original injection impeller produced temperature patterns as good as those produced by the modified impellers.

3. Each impeller showed approximately the same engine performance characteristics such as required manifold pressure, combustion-air flow, and throttle angle for a given power.

Aircraft Engine Research Laboratory,
National Advisory Committee for Aeronautics,
Cleveland, Ohio.

Robert O. Hickel,
Mechanical Engineer.

Donald J. Michel

Donald J. Michel,
Mechanical Engineer.

Approved: Frank E. Marble 8-26-46
Frank E. Marble,
Aeronautical Engineer.

Oscar W. Schey
Oscar W. Schey,
Mechanical Engineer.

jh

REFERENCES

1. Marble, Frank E., Ritter, William K., and Miller, Mahlon A.: Effect of the NACA Injection Impeller on the Mixture Distribution of a Double-Row Radial Aircraft Engine. NACA TN No. 1069, 1946.

2. Ritter, William K., Johnsen, Irving A., and Lieblein, Seymour: Hydraulic Characteristics of the NACA Injection Impeller. NACA MR No. E6C25, Army Air Forces, 1946.

E-278

3. Schey, Oscar W., Pinkel, Benjamin, and Ellerbrock, Herman H., Jr.: Correction of Temperatures of Air-Cooled Engine Cylinders for Variation in Engine and Cooling Conditions. NACA Rep. No. 645, 1938.

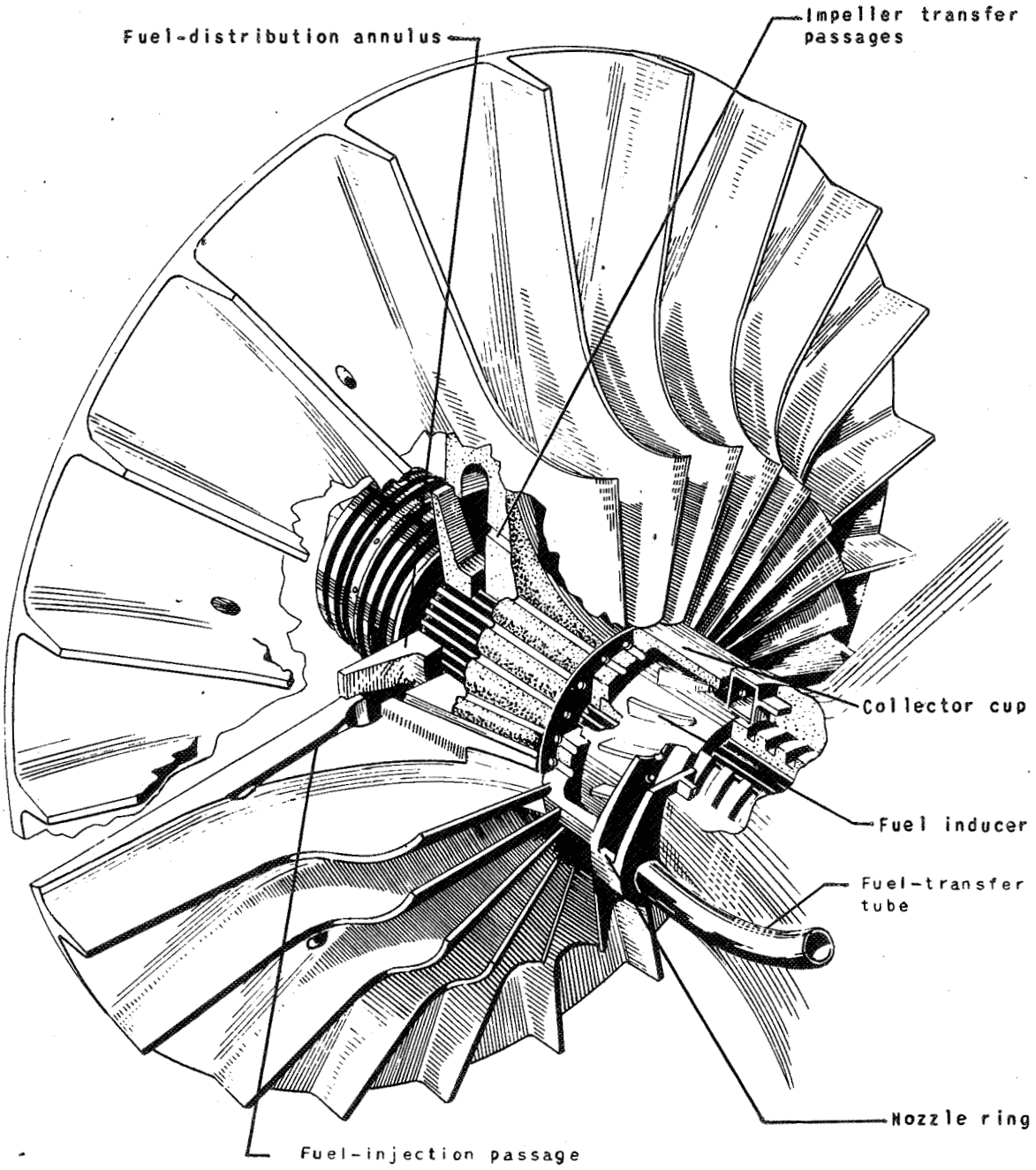

NATIONAL ADVISORY
COMMITTEE FOR AERONAUTICS

Figure 1. - Original NACA injection impeller A designed for installation on R-3350 engine.

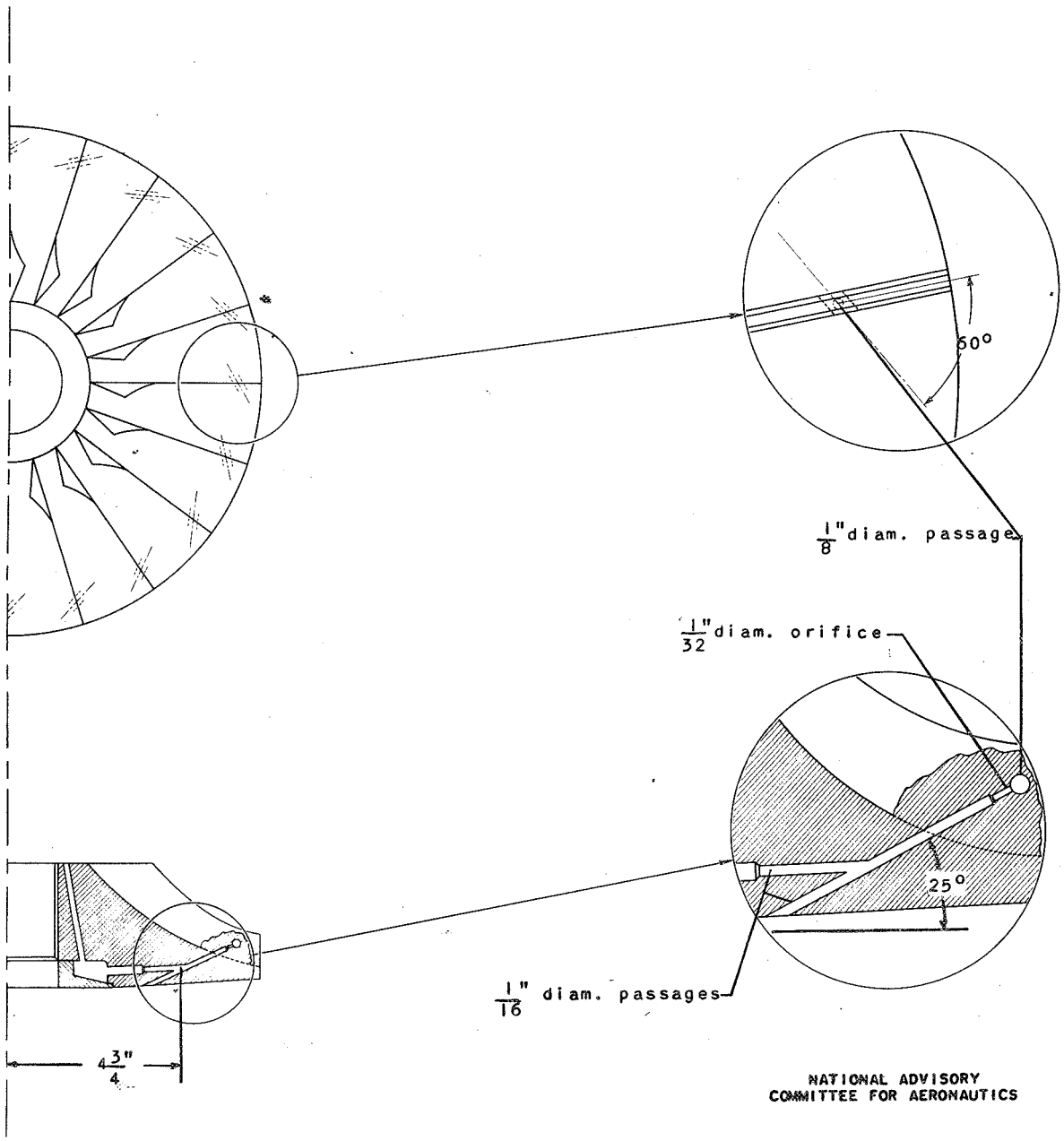

(a) Impeller B.

Figure 2. - Schematic diagrams of modified designs of NACA injection impeller as installed in R-3350 engine.

285 682

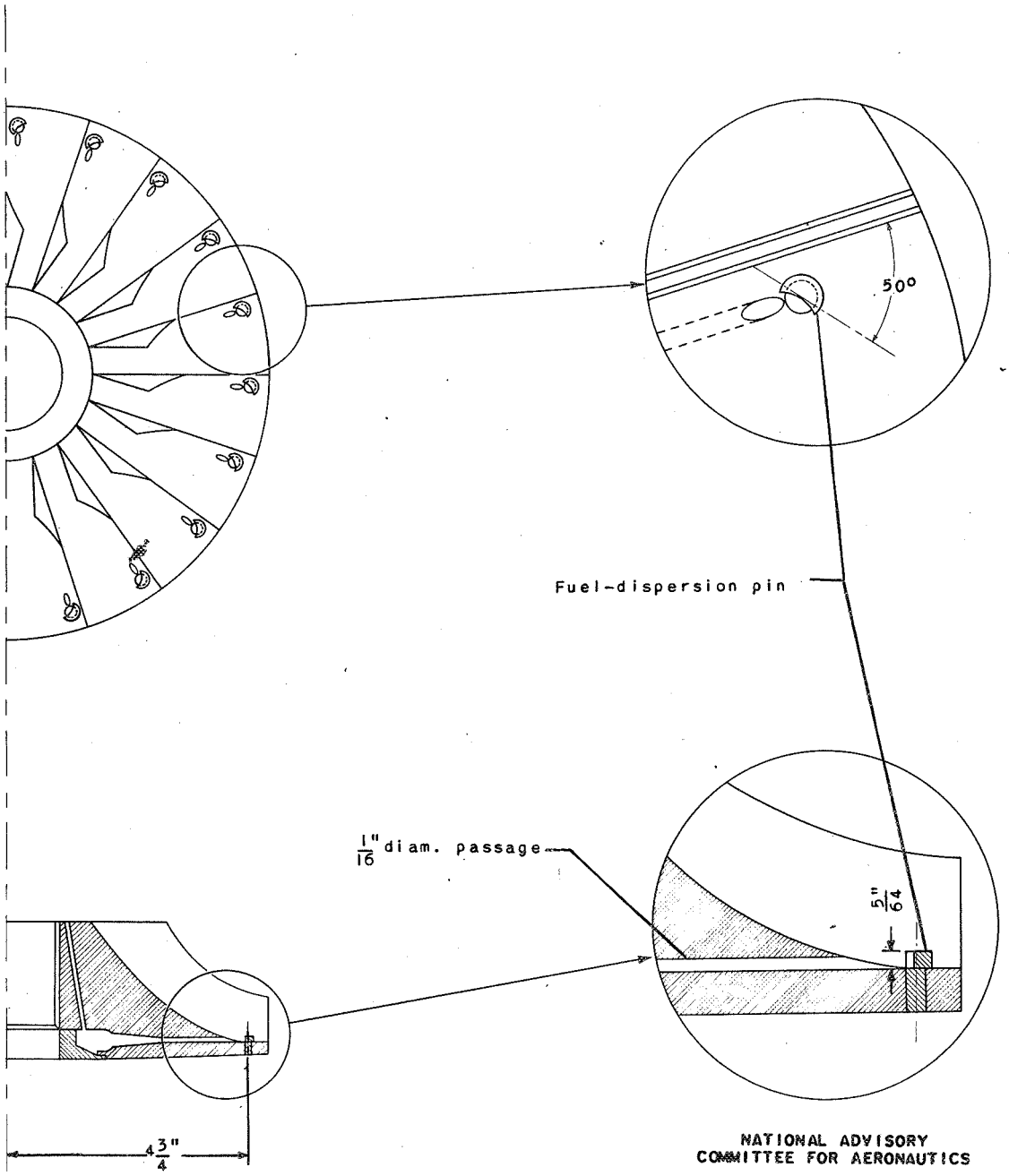

(b) Impeller C.

Figure 2. - Continued. Schematic diagrams of modified designs of NACA injection impeller as installed in R-3350 engine.

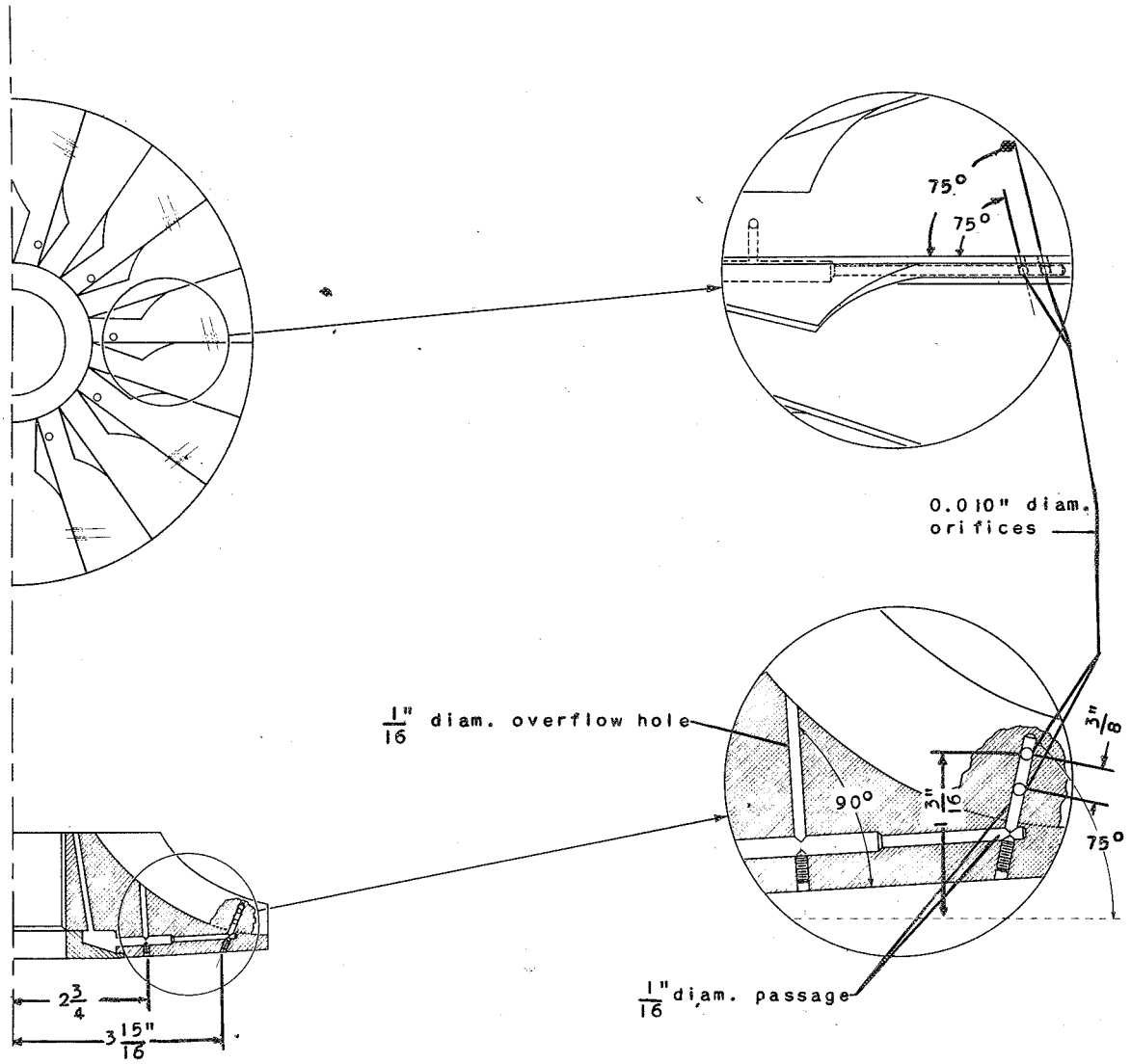

NATIONAL ADVISORY
COMMITTEE FOR AERONAUTICS

(c) Impeller D.

Figure 2. - Concluded. Schematic diagram of modified design of NACA injection impeller as installed in a R-3350 engine.

285 + 681

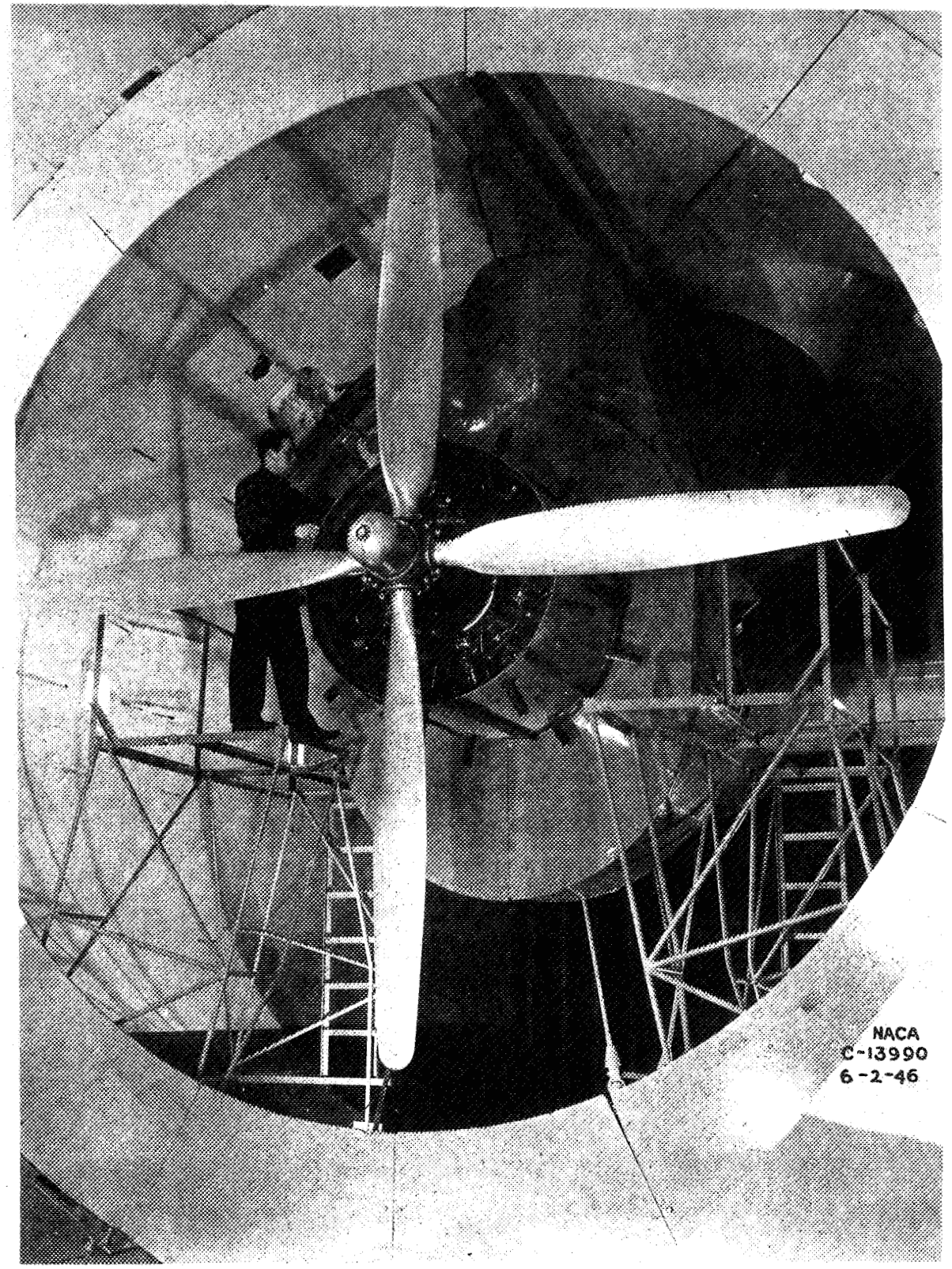

Figure 3. - Test-cell installation of R-3350-23A engine.

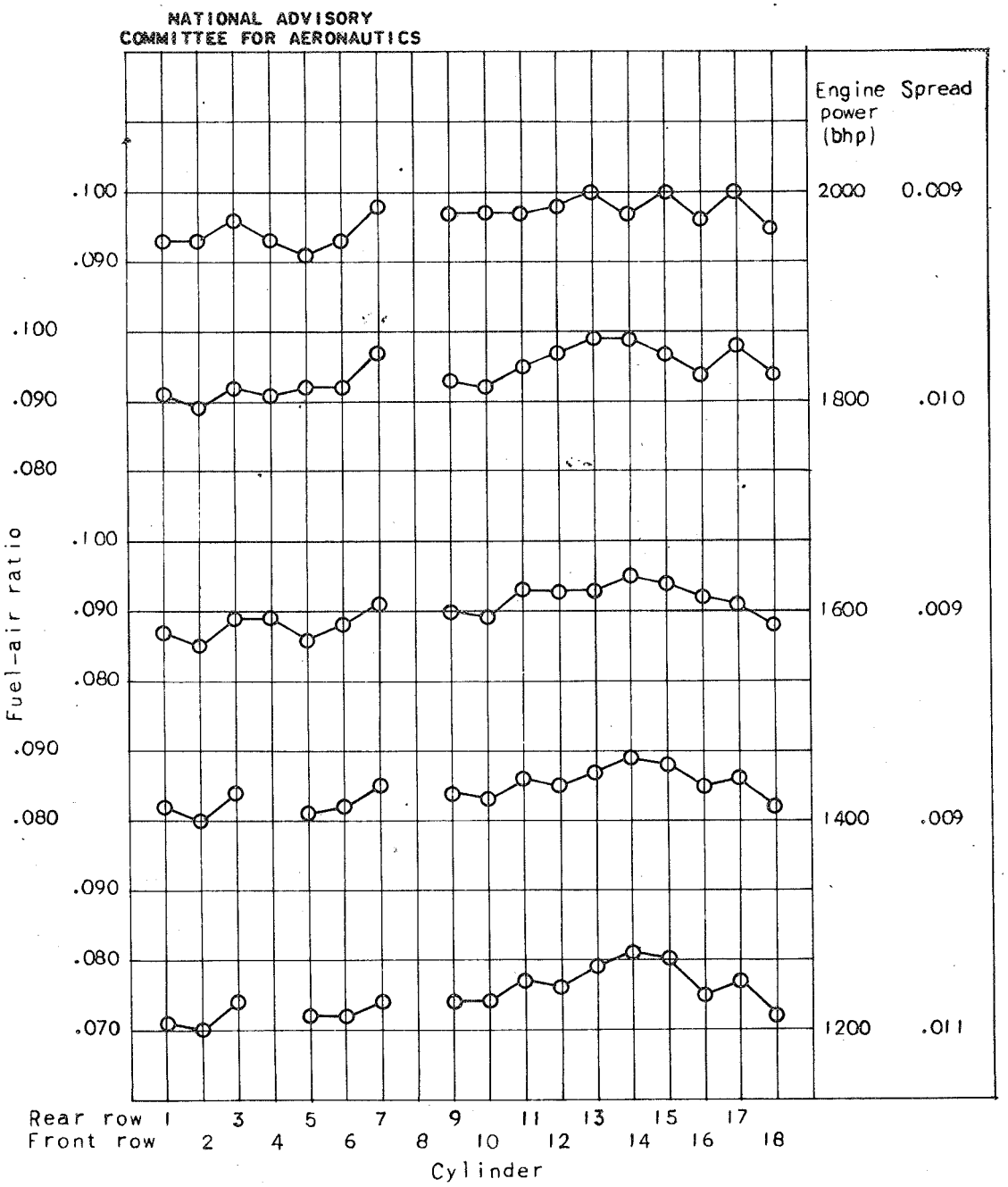

(a) Impeller A.

Figure 4. - Fuel-air ratio distribution patterns obtained using NACA injection impellers in R-3350 engine.

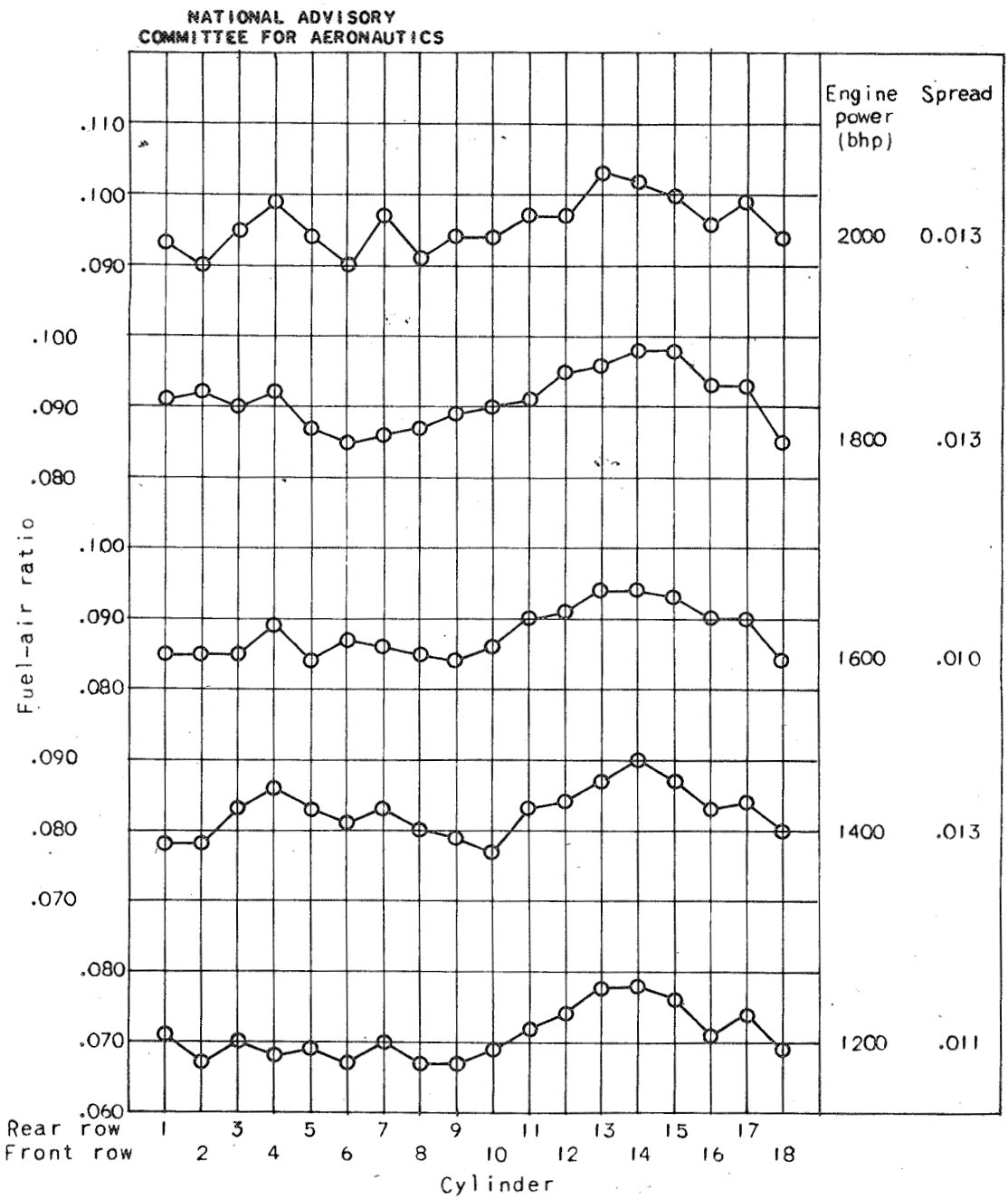

(b) Impeller B.

Figure 4. - Continued. Fuel-air ratio distribution patterns obtained using NACA injection impellers in R-3350 engine.

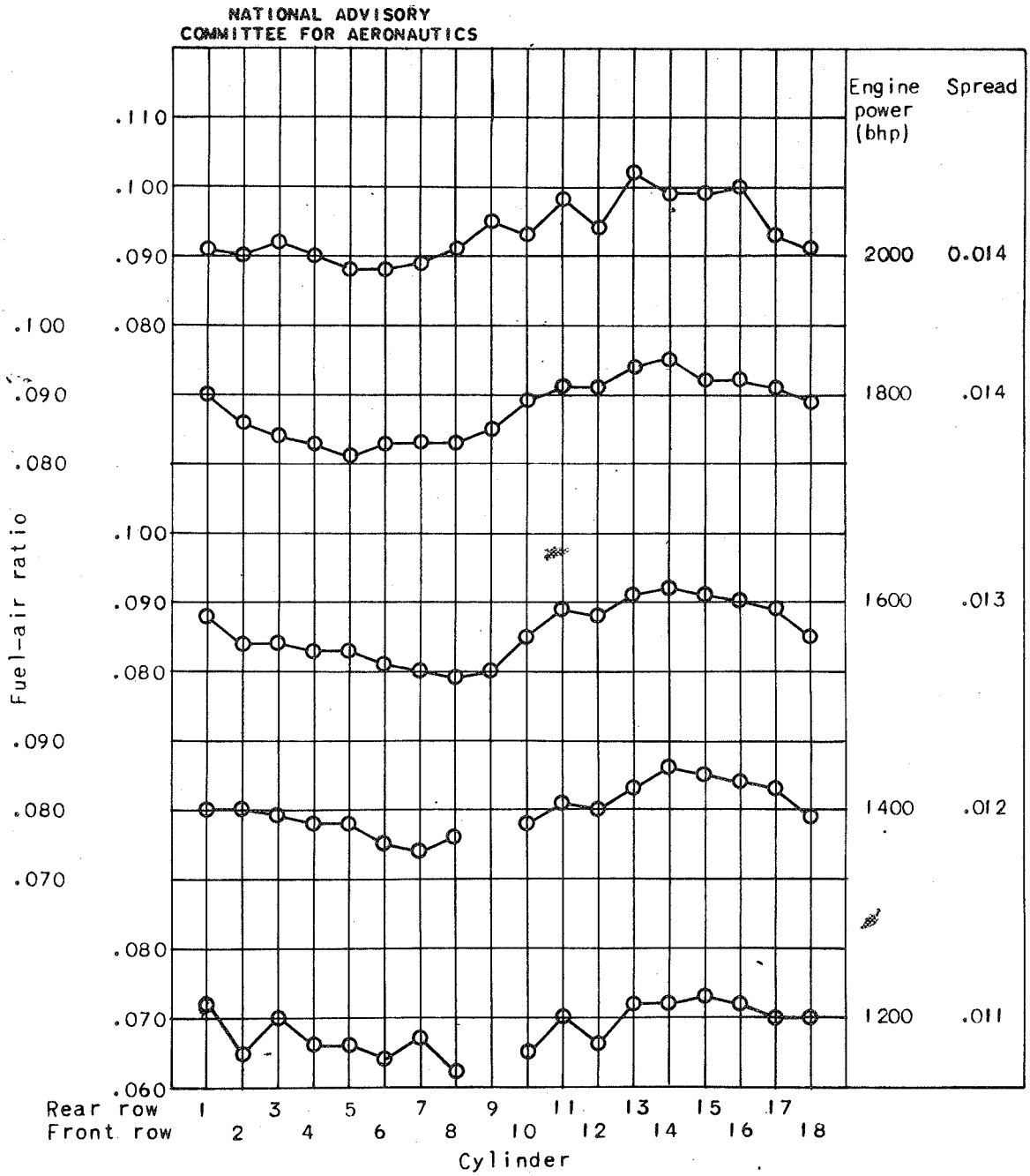

(c) Impeller C.

Figure 4. - Concluded. Fuel-air ratio distribution patterns obtained using NACA injection impellers in R-3350 engine.

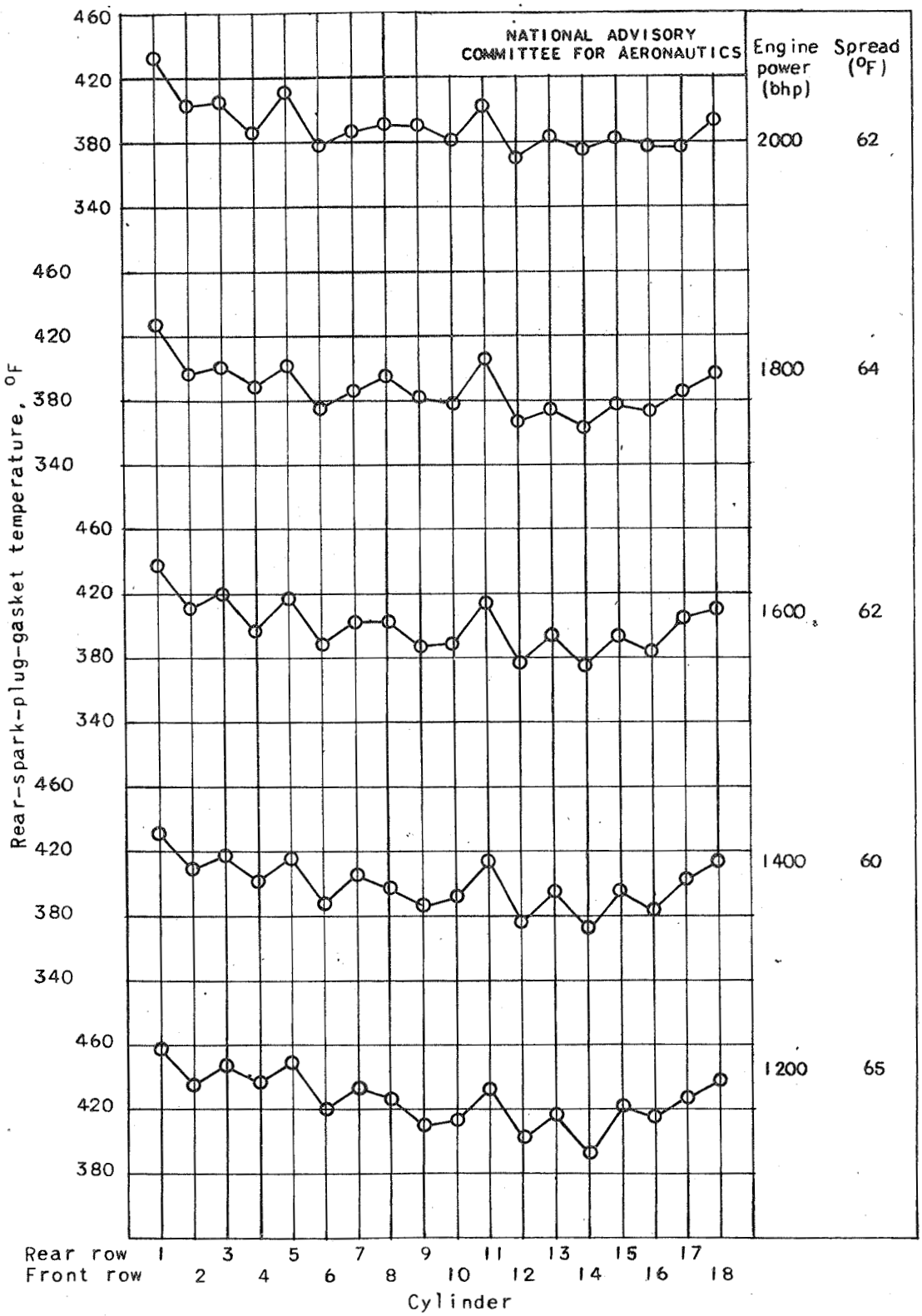

(a) Impeller A.

Figure 5. - Rear-spark-plug-gasket temperature-distribution patterns obtained using NACA injection impellers in R-3350 engine.

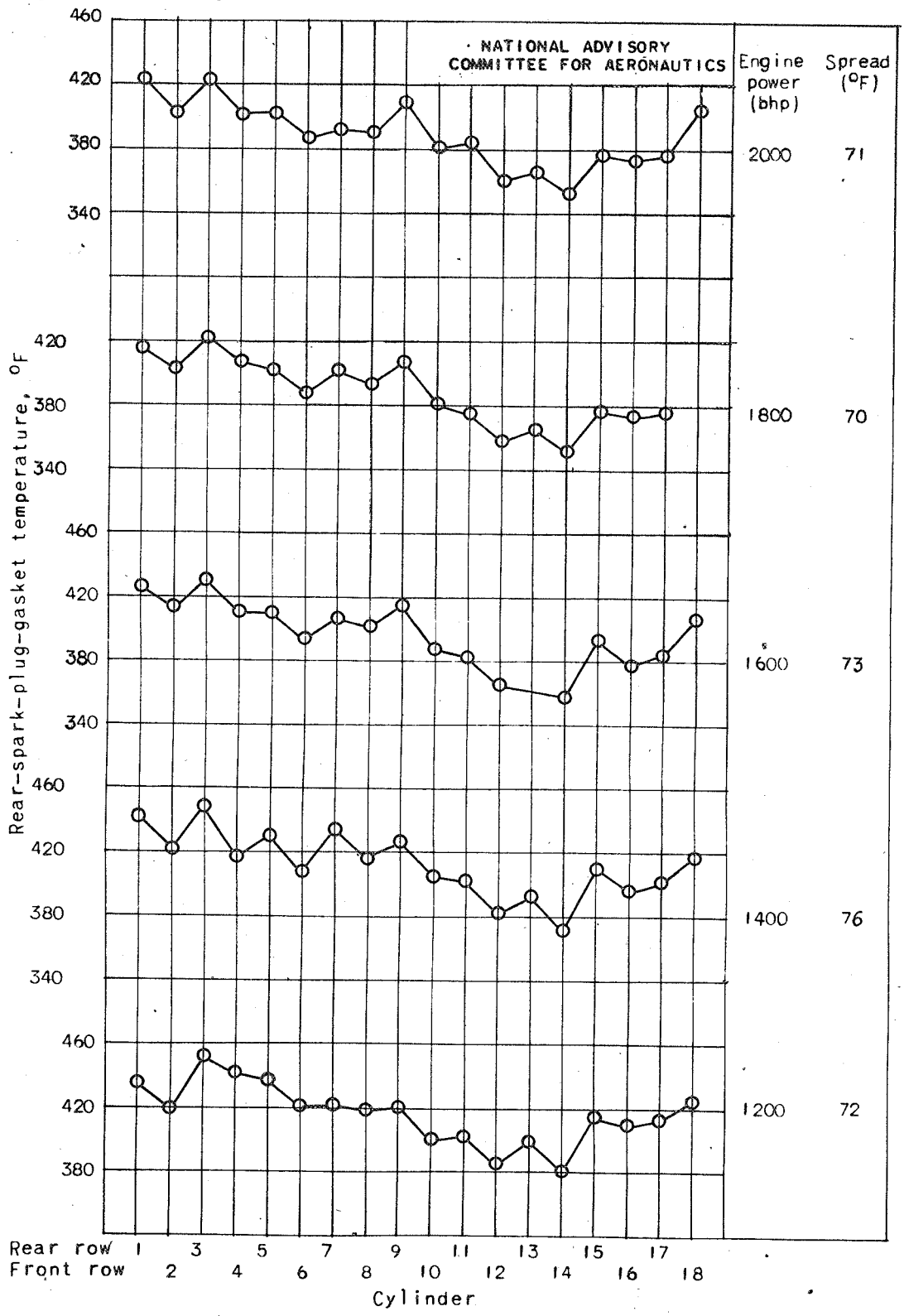

(b) Impeller B.

Figure 5. - Continued. Rear-spark-plug-gasket temperature-distribution patterns obtained using NACA injection impellers in R-3350 engine.

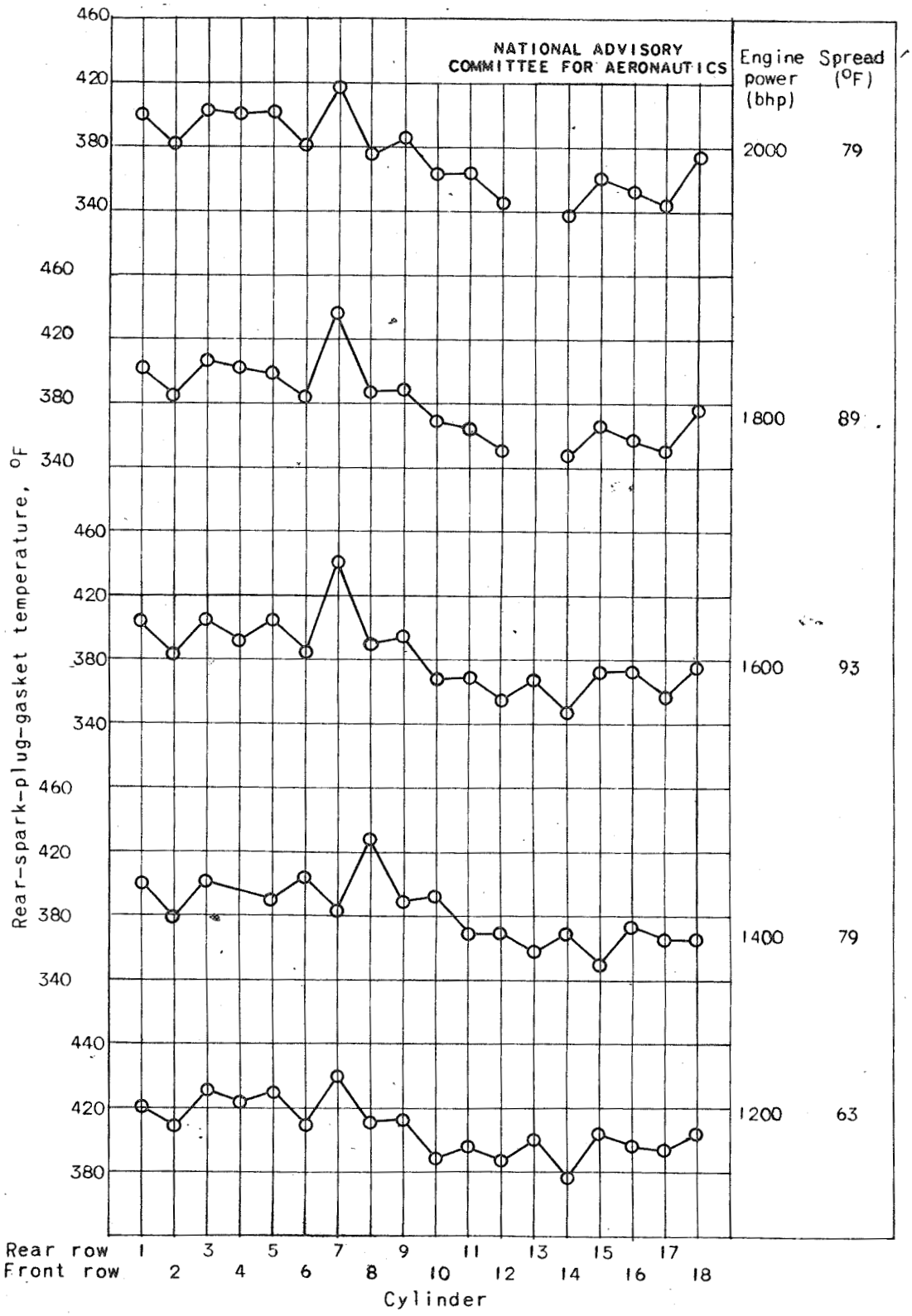

(c) Impeller C.

Figure 5. - Concluded. Rear-spark-plug-gasket temperature-distribution patterns obtained using NACA injection impeller in R-3350 engine.

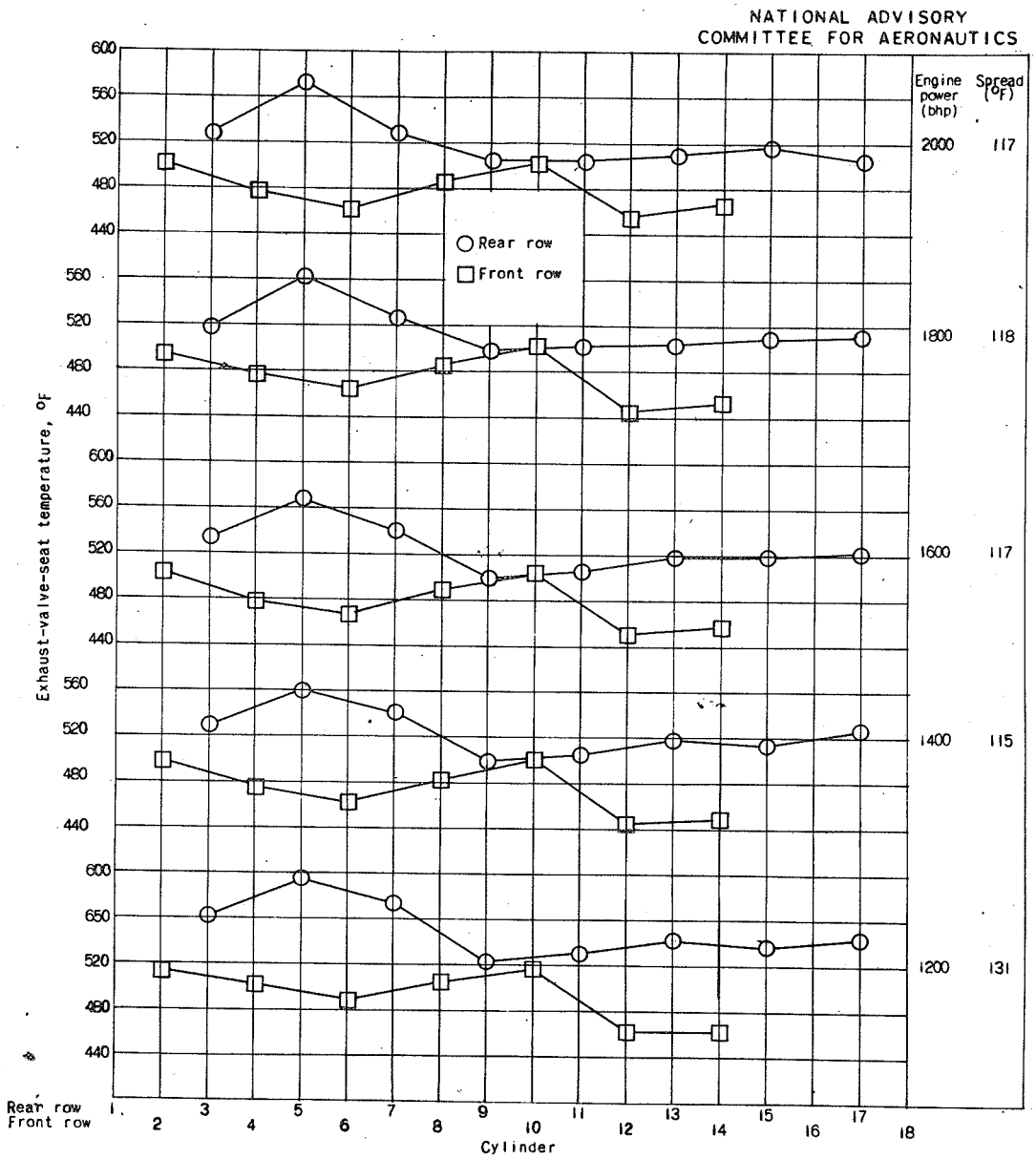

(a) Impeller A.

Figure 6. - Exhaust-valve-seat temperature-distribution patterns obtained using NACA injection impellers in R-3350 engine.

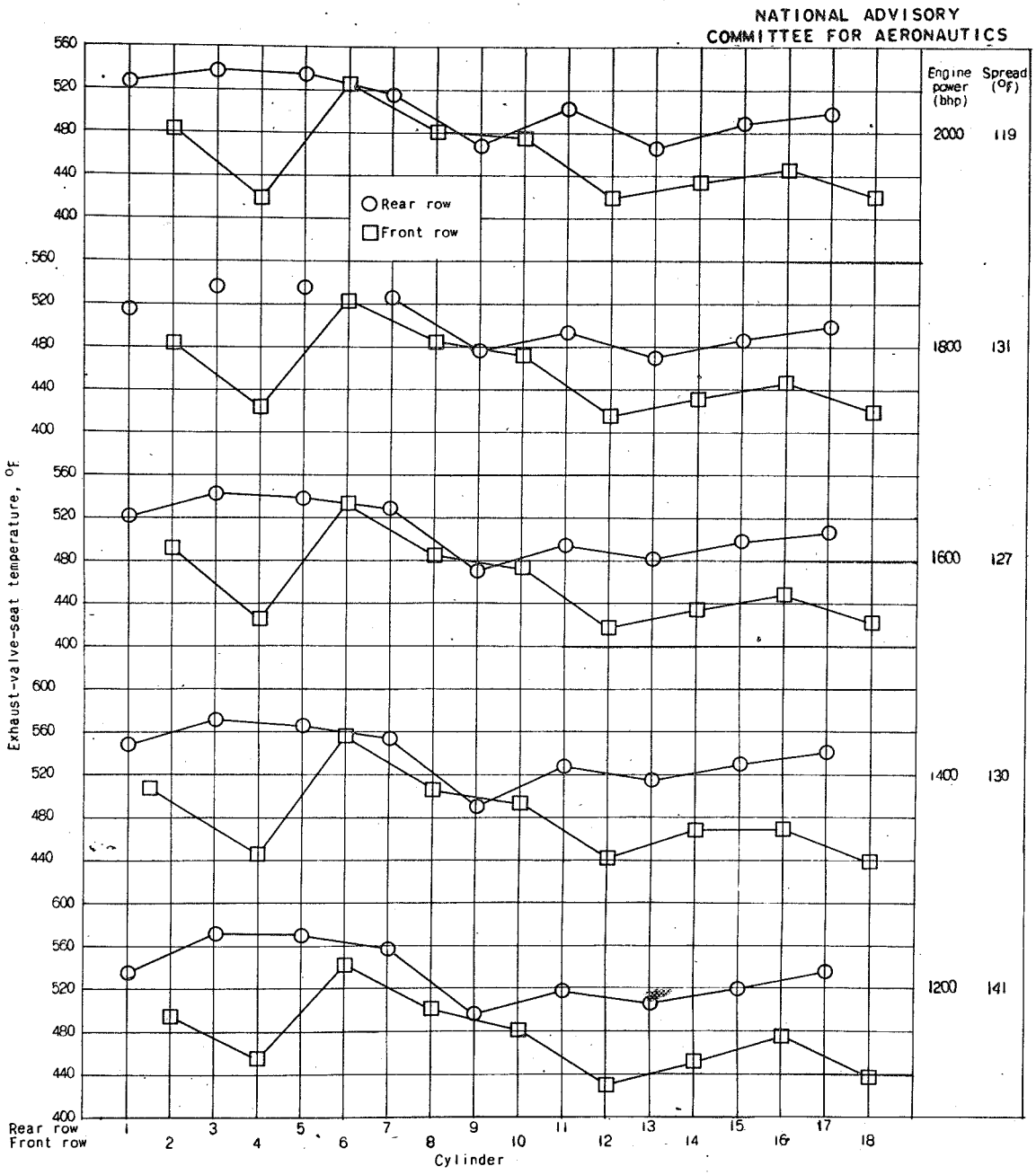

(b) Impeller B.

Figure 6. Continued. Exhaust-valve-seat temperature-distribution patterns obtained using NACA injection impellers in R-3350 engine.

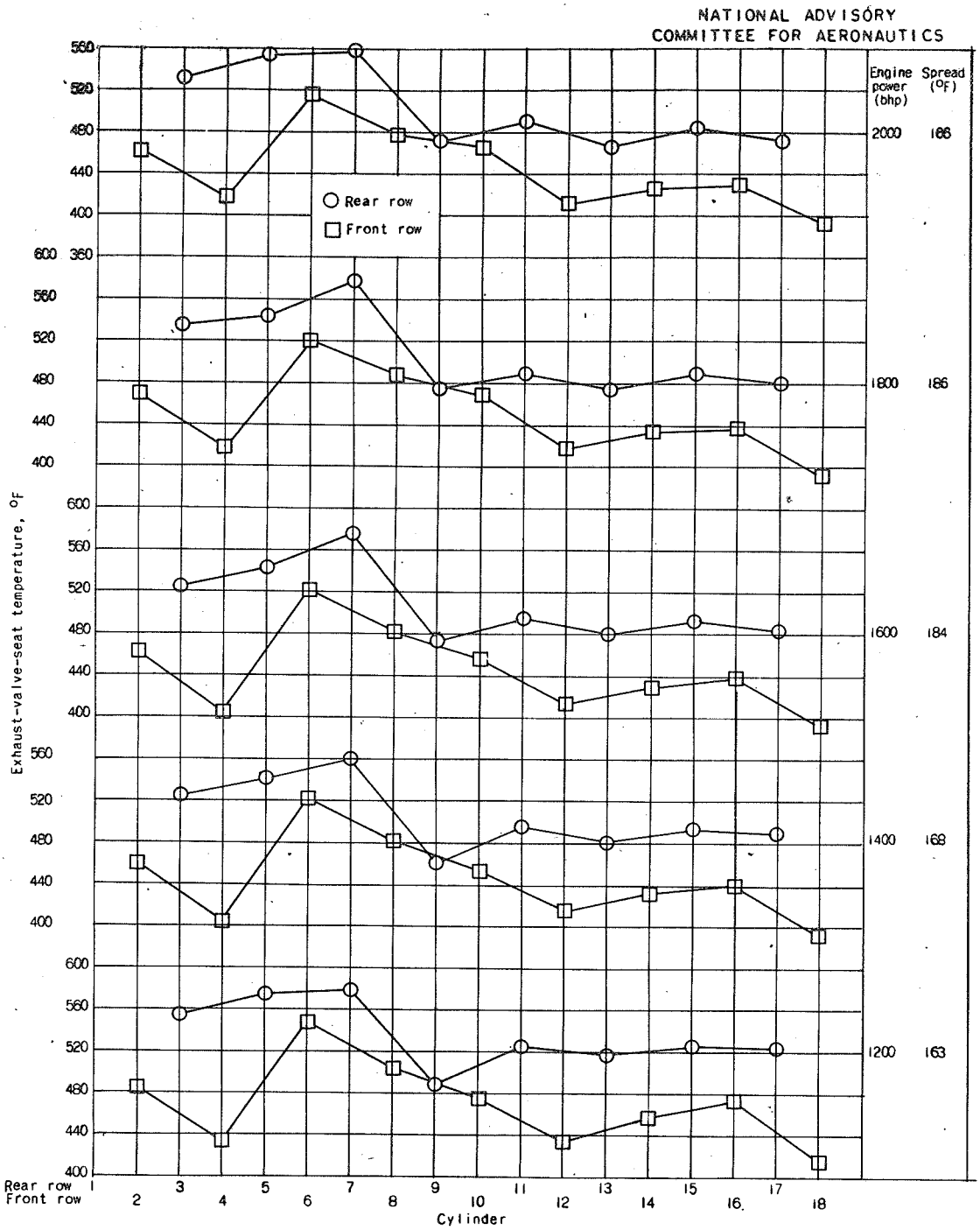

(c) Impeller C.

Figure 6. - Concluded. Exhaust-valve-seat temperature-distribution patterns obtained using NACA injection impellers in R-3350 engine.

EDITION FORM 69 A (13 OCT 47)

RESTRICTED

ATI- 1300

ORIG. AGENCY NUMBER

RM-E6K20

REVISION

Hickel, R. O.
Michel, D. J.

AUTHOR(S)

DIVISION: Power Plants, Reciprocating (6)
SECTION: Induction and Supercharging (2)
CROSS REFERENCES: Superchargers -- Performance (91003); Impellers - Design (50932); Engine performance (32846); R-3350 (32846)

AMER. TITLE: Investigation of three design modifications of the NACA injection impeller in an R-3350 engine

FORG'N. TITLE:

ORIGINATING AGENCY: National Advisory Committee for Aeronautics, Washington, D. C.

TRANSLATION:

COUNTRY	LANGUAGE	FORG'N.CLASS	U. S.CLASS.	DATE	PAGES	ILLUS.	FEATURES
U.S.	Eng.		Restr.		24	17	photos, tables, diagrs, graphs

ABSTRACT

Effects of three design modifications of the original NACA injection impeller on the performance of an R-3350 engine were investigated. Different methods of injecting the fuel into the impeller air stream were studied and evaluated from the individual cylinder fuel/air ratios and the resulting cylinder temperatures. It was found that the more complexly designed modified impellers produced approximately the same mixture- and temperature-distribution characteristics as the simple, original impeller. Manifold pressure, combustion-air flow, and throttle angle were not appreciably affected.

NOTE: Requests for copies of this report must be addressed to N.A.C.A., Washington, D. C.