UNCLASSIFIED

AD NUMBER
ADA801302
CLASSIFICATION CHANGES
TO: **unclassified**
FROM: **restricted**
LIMITATION CHANGES
TO: **Approved for public release; distribution is unlimited.**
FROM: **Distribution authorized to DoD only; Administrative/Operational Use; 10 JUL 1945. Other requests shall be referred to Office of Scientific Research and Development, Washington, DC 20301. Pre-dates formal DoD distribution statements. Treat as DoD only.**
AUTHORITY
OSRD list no. 39 dtd 20 Jan-21 Feb 1947; OTS index dtd Jun 1947

THIS PAGE IS UNCLASSIFIED

CLASSIFICATION CHANGED TO UNCLASSIFIED

BY AUTHORITY OF R-U

Date 2 JULY 1957 Signed Richard E. Reedy
OFFICE SECURITY ADVISOR

A.T.I 24617

Reproduced by

DOCUMENT SERVICE CENTER

ARMED SERVICES TECHNICAL INFORMATION AGENCY

KNOTT BUILDING, DAYTON, 2, OHIO

"NOTICE: When Government or other drawings, specifications or other data are used for any purpose other than in connection with a definitely related Government procurement operation, the U.S. Government thereby incurs no responsibility, nor any obligation whatsoever; and the fact that the Government may have formulated, furnished, or in any way supplied the said drawings, specifications or other data is not to be regarded by implication or otherwise as in any manner licensing the holder or any other person or corporation, or conveying any rights or permission to manufacture, use or sell any patented invention that may in any way be related thereto."

UNCLASSIFIED

The Aerodynamics of a Slightly Yawing Supersonic Cone

24617

(None)

Stone, A. H.

Carnegie Institution of Washington, Washington, D. C.

(None)

Office of Scientific Research and Development, Div. 1, Washington, D. C.

OSRD 6306

July '45 Restr. U.S. Eng. 44 tables, diagrs, graph

The Taylor-Maccoll theory, dealing with the aerodynamic problem of the flow around a cone moving without yaw at supersonic speeds through air, is extended. The theory is applied to the case in which the cone is moving with a small yaw. The problem is reduced to a form suitable for computation, and the theory is checked by comparing its predictions about the shape and yaw of the shock wave with experiment. The head contribution to the total normal-force coefficient and center of pressure of a conical headed projectile in flight is determined.

Copies of this report obtainable from Air Documents Division; Attn: MCIDXD

Ornance and Armament (22)

Ballistics (12)

Projectiles, Supersonic - Yaw (75427.82); Projectiles - Aerodynamics (75415)

R-22-12

Air Documents Division, T-2
AMC, Wright Field
Microfilm No.
R C987 F 24617

RESTRICTED

~~234~~
210.1

Division 1
National Defense Research Committee of the
Office of Scientific Research and Development

THE AERODYNAMICS OF A SLIGHTLY YAWING SUPERSONIC CONE

by

A. H. Stone
Geophysical Laboratory
Carnegie Institution of Washington

NDRC Report No. A-358
OSRD Report No. 6306

This document contains information affecting the national defense of the United States within the meaning of the Espionage Act, U.S.C., 50; 31 and 32. Its transmission or the revelation of its contents in any manner to an unauthorized person is prohibited by law.

Copy No. 107

RESTRICTED

RESTRICTED

Division 1
National Defense Research Committee of the
Office of Scientific Research and Development

THE AERODYNAMICS OF A SLIGHTLY YAWING SUPERSONIC CONE

by

A. H. Stone
Geophysical Laboratory
Carnegie Institution of Washington

NDRC Report No. A-358
OSRD Report No. 6306

This document contains information affecting the National Defense of the United States within the meaning of the Espionage Act, U. S. C. 50, 31 and 32. Its transmission or the revelation of its contents in any manner to an unauthorized person is prohibited by law.

Submitted to Division 1
on July 10, 1945

RESTRICTED

This report was edited and prepared for duplication by, and is distributed by:

Technical Reports Section
Office of the Chairman, NDRC
Room 4724, Munitions Building
Washington 25, D.C.

Requests from Service personnel for additional copies should be addressed to:

War Department	Navy Department
War Department Liaison Officer with NDRC Headquarters, Army Service Forces The Pentagon Washington 25, D.C.	Chief of Research and Inventions Research and Development Division EXOS, Navy Department Washington 25, D.C.

LETTER OF SUBMITTAL

Division 1
National Defense Research Committee
Office of Scientific Research and Development
Washington, D.C.

31 October 1945

My dear Doctor Stewart:

I have the honor to forward herewith a report by A. H. Stone, entitled The aerodynamics of a slightly yawing supersonic cone, which has been accepted by Division 1 and approved by the Division Chief for duplication and for the usual distribution that has been sanctioned by the National Defense Research Committee. The work described therein is pertinent to the project designated by the War Department as OD-52 and to the project designated by the Navy Department as NO-26.

The purpose of this investigation was to provide basic information for use in connection with the design of projectiles. It is believed that the solution of a three-dimensional compressible flow problem involving a shock wave, whereby values of the cross-wind force coefficient and position of center of pressure of a high-speed cone can be obtained by numerical integration of the equation, will be useful in experimental determination of aerodynamic factors affecting the stability of the projectiles. The work was carried out at the Geophysical Laboratory of the Carnegie Institution of Washington under contract OEMsr-51; and the report was transmitted on behalf of that Laboratory by Dr. H. E. Merwin, Technical Representative for the contract.

The initial distribution of the report appears on the following page.

Respectfully submitted,

L. H. Adams

L. H. Adams
Chief, Division 1

Dr. Irvin Stewart, Executive Secretary
National Defense Research Committee

Initial distribution of copies

No. 1 to Office of the Executive Secretary, OSRD;

Nos. 2 to 14 to Liaison Office, OSRD;

No. 15 to J. P. Baxter, III, Historian, OSRD;

Nos. 16 to 18 to L. H. Adams, Chief, Division 1;

Nos. 19 to 21 to H. B. Allen, Deputy Chief, Division 1;

No. 22 to War Department Liaison Officer for NDRC;

Nos. 23 to 35 to Ordnance Department Liaison Officer for NDRC for
Col. S. B. Ritchie (6 copies)
R. H. Kent, Aberdeen Proving Ground (4 copies)
Ordnance Research and Development Center, Aberdeen Proving Ground (1 copy)
Office of the Ordnance Officer, U.S. Military Academy (2 copies)

Nos. 36 to 38 to Army Air Forces Liaison Officer for NDRC for
AAF Board, Orlando, Fla. (2 copies)
AAF School Library-Req. 265, AAF Center, Orlando, Fla. (1 copy)

Nos. 39 to 53 to Office of the Chief of Research and Inventions, Navy Department for
Office of Research and Inventions (4 copies)
Lt. Comdr. B. D. Mills, Jr., Re5a, Bureau of Ordnance (6 copies)
Technical Library, Adlf-2, Bureau of Ordnance (1 copy)
Head of Department of Ordnance and Gunnery, U.S. Naval Academy (1 copy)
Director, Naval Ordnance Laboratory (2 copies)
Officer-in-Charge, U.S. Naval Proving Ground (1 copy)

No. 54 to Director, Naval Research Laboratory;

No. 55 to N. H. Smith, The Franklin Institute;

No. 56 to H. E. Merwin, Geophysical Laboratory.

CONTENTS

		Page
Abstract		1
Section		
1.	Introduction	1
2.	Geometrical discussion	4
3.	The differential equations	7
4.	Substitution	10
5.	The boundary conditions	12
6.	The Bernoulli equation	15
7.	Determination of $nx_n + z_n \sin \theta$	17
8.	Determination of x_n, and so forth	18
9.	The problem for computation	21
10.	Departure from isentropy	24
11.	Irrotationality and other approximations	26
12.	The shock wave for conical-headed projectiles	28
13.	The pressure on a conical-headed projectile	31
14.	Uniqueness	34

List of Figures

Figure		Page
1.	The flow past the cone	5
2.	Coordinates	5
3.	Observed and theoretical values of projectile yaw and wave yaw	30
4.	Idealized conical-headed projectile	31

THE AERODYNAMICS OF A SLIGHTLY YAWING SUPERSONIC CONE*

Abstract

The flow around a cone moving at high velocity at a small yaw is worked out mathematically. The problem is reduced to a form suitable for computation, and the theory is checked by comparing its predictions about the shape and yaw of the shock wave with experiment. It is applied to determine the head contribution to the normal-force coefficient and center of pressure of a conical-headed projectile in flight.

1. Introduction

The aerodynamic problem of the flow around a cone moving without yaw at supersonic speeds through air has been worked out by Taylor and Maccoll,[1] and the results have proved useful in evaluating the head drag on conical-headed projectiles, in calibrating ballistic measurements, and so forth. The object of the present report is to extend the theory to cover the case in which the cone is moving with a small yaw, and to apply the theory to evaluate the normal-force coefficient and center of pressure on the conical head of a projectile, and to locate the shock wave.

This problem has been considered by Karush and Critchfield,[2] and the present report may be regarded as a continuation of their work. The main difference is that a simplifying assumption made by Karush and Critchfield,[3] which led to a final equation not well adapted to numerical solution, is abandoned. It is remarkable that this abandonment actually leads to a simpler final equation.

---

*Grateful acknowledgments are due to Col. L. E. Simon and to the Ballistic Research Laboratory of the Aberdeen Proving Ground for their cooperation.

1/ G. I. Taylor and J. W. Maccoll, Proc. Roy. Soc. A 139 (1933), pp. 278-311; J. W. Maccoll, Proc. Roy. Soc. A 159 (1937), pp. 459-472. See also W. Karush and C. L. Critchfield, The drag coefficient for a cone moving with high velocity, NDRC Report A-126 (OSRD-1104), Dec. 1942.

2/ W. Karush and C. L. Critchfield, The pressure on a cone moving with small yaw at high velocity, NDRC Report A-260 (OSRD-3397). This report will be referred to as [K.C.].

3/ The constancy of ξ ([K.C.], p. 8).

Under reasonable physical assumptions, the problem is here reduced to the solution of an ordinary linear differential equation of the second order, with simple boundary conditions. The solution has been computed in one case by the Ballistic Research Laboratory of the Aberdeen Proving Ground. (Tabulation of the solution by mechanical means is planned by the Navy Department.) The theory is checked against experiment, in the case which has been computed, by comparing its predictions about the geometrical form of the shock wave with measurements (likewise supplied by the Ballistic Research Laboratory) of spark photographs of conical-headed projectiles. For this reason, the shape of the shock wave has not been postulated a priori (except insofar as it is assumed to be close to its nonyaw position). It is shown theoretically that the shock wave will remain a circular cone, and that its semiangle is unchanged from its nonyaw value (denoted by θ_w); and the ratio of its "yaw" δ 4/ to the yaw ϵ of the conical projectile is evaluated. The experimental confirmation seems satisfactory.

The theory is then applied to estimate approximately the normal-force coefficient and the center of pressure for a conical-headed projectile, insofar as the head force is concerned. This enables rougher estimates to be given for the total normal-force coefficient, and for the total center of pressure, and should indicate how the normal force and center of pressure on a conical-headed projectile may be expected to vary with varying speeds and cone angles. It should be observed that the drag on the yawing cone will be unaltered from its nonyaw value, since the square of the yaw is neglected throughout. Moreover, the formula for the center of (head) pressure will be identical with that in [K.C.], since it depends only on the general form of the pressure function.

Finally, a brief discussion is made of the mathematically revealed possibility that for certain exceptional combinations of Mach number and cone angle, the solution may not be unique. It is shown that this may affect the shape of the shock wave, but not the forces on the cone.

4/ That is, δ is the angle between the axis of symmetry of the shock wave and the direction of motion of the cone.

An attempt has been made to keep the physical assumptions few and safe. The main assumptions are:

(i) The Mach number U/a_1 is large enough, and the cone semiangle θ_s is small enough, for the nonyaw case to give rise to a conical shock wave attached to the cone at the vertex. (This amounts to requiring U/a_1 to be somewhat larger than 1, and θ_s to be less than 56°; the exact limits have been calculated by Taylor and Maccoll.)

(ii) The yaw ϵ is small enough for ϵ^2 to be disregarded throughout. (Roughly speaking, this will amount to requiring that ϵ be not much larger than 5°.)

(iii) The flow relative to the cone is steady. (This implies that the velocity of the cone, and the magnitude and direction of its yaw, can change only relatively slowly.)

(iv) The flow is independent of the distance r from the vertex of the cone. (That is, the air velocity, pressure, and so forth, will be the same for any two points on the same ray through the vertex.)

(v) The flow is adiabatic, as far as each air particle is concerned, though not isentropic. (That is, the entropy will be constant — except for a jump at the shock wave — for each air particle, but will in general vary from particle to particle. This amounts to neglecting the effects of viscosity and heat conduction in the flow between the shock wave and the cone.)

(vi) The air behaves like a perfect (nonviscous) fluid and an ideal (polytropic) gas. (In particular, the standard Hugoniot-Rankine-Meyer conditions are obeyed at the shock wave.)

Assumptions (i), (iii), (iv), and (vi) were used very successfully in the nonyaw case by Taylor and Maccoll; of course, in the nonyaw case assumption (ii) is trivial, and (v) can be simplified, since there will be isentropy. There is also some direct experimental evidence in favor of assumption (iv). The accuracy of the "thermodynamical" part of the shock-wave conditions involved in assumption (vi) is not important; this is essentially because the variation in entropy turns out to be very small. It should be observed that the flow will <u>not</u> be irrotational.

2. Geometrical discussion

The geometrical considerations are essentially the same as in [K.C.]. The motion will be considered relative to the cone. Thus a stream of air, originally of uniform velocity U, pressure p_1, and density ρ_1, encounters a stationary shock wave, and then flows on past the cone (see Fig. 1).

We use spherical coordinates (r,θ,ϕ), with origin at the vertex of the cone, and axis $(\theta = 0)$ in the direction of motion of the undisturbed air. The plane $\phi = 0$ is chosen to be the plane of yaw; thus the axis of the cone will have the equation $|\theta = \epsilon,\ \phi = 0|$. (See Fig. 2.) It is understood that $r \geqq 0$, $0 \leqq \theta \leqq \pi$, and $0 \leqq \phi \leqq 2\pi$.

The semiangle of the cone is denoted by θ_s. To find the equation of the cone surface (see Fig. 2), we observe that if A is the point $(1,\epsilon,0)$ on the cone axis, the point P with coordinates (r,θ,ϕ) lies on the cone (that is, on the cone surface) if and only if the inner vector product $\vec{OP} \cdot \vec{OA} = |OP| \cdot |OA| \cos\theta_s$. Now, using temporarily the rectangular coordinate (1,2,3) indicated in Fig. 2, $\vec{OP}$ is $(r\cos\theta,\ r\sin\theta\cos\phi,\ r\sin\theta\sin\phi)$, and $\vec{OA}$ is $(\cos\epsilon,\ \sin\epsilon,\ 0)$.

Thus the equation of the cone reduces to

$$r\cos\theta\cos\epsilon + r\sin\theta\sin\epsilon\cos\phi = r\cos\theta_s.$$

Here ϵ is small; so, disregarding ϵ^2, we may write $\cos\epsilon = 1 = \cos(\epsilon\cos\phi)$ and $\sin\epsilon\cos\phi = \epsilon\cos\phi = \sin(\epsilon\cos\phi)$; and the equation becomes

$$\cos\theta\cos(\epsilon\cos\phi) + \sin\theta\sin(\epsilon\cos\phi) = \cos\theta_s;$$

that is,

$$\cos(\theta - \epsilon\cos\phi) = \cos\theta_s,$$

which is equivalent to

$$\theta = \theta_s + \epsilon\cos\phi, \tag{1}$$

the equation of the cone.

Concerning the shock wave, we assume that on it θ is an analytic function[5/] of ϕ, depending continuously on ϵ; it is, of course, independent of r

5/ The assumption of analyticity is unnecessarily strong, but is made in order to avoid discussions of convergence, term-by-term differentiability, and so forth.

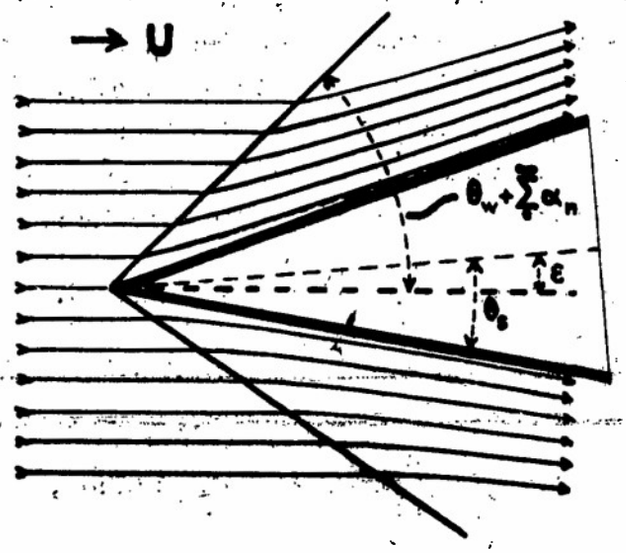

FIG.1. THE FLOW PAST THE CONE.

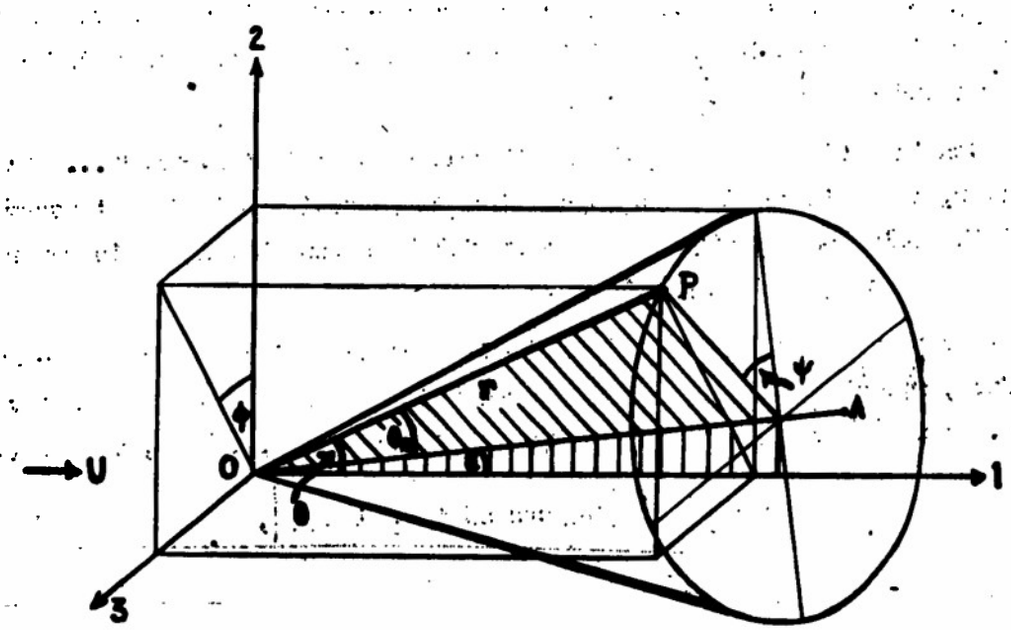

FIG.2. TILTED CONE SHOWING COORDINATE SYSTEM.

since the whole flow is so. When $\epsilon = 0$, we are in the nonyaw case and θ has the constant value θ_W on the shock wave. Hence, if ϵ is small, we have $\theta = \theta_W + f$, where f is a small function of ϕ and ϵ only. (The quantities θ_s, U, a_1, on which the motion also depends, will be regarded as constant throughout.) Since f is now an analytic function of ϕ, and moreover is periodic with period 2π, f can be expanded in a Fourier series:

$$f = \alpha_0 + \sum_{n=1}^{\infty} (\alpha_n \cos n\phi + A_n \sin n\phi).$$

Thus, introducing $A_0 = 0$ for convenience, the equation of the shock wave becomes

$$\theta = \theta_W + \sum_{n=0}^{\infty} (\alpha_n \cos n\phi + A_n \sin n\phi), \tag{2}$$

where α_n and A_n are constants (that is, are independent of r, θ, ϕ), and are small if ϵ is small.

Since the function θ in Eq. (2) is assumed to be analytic, it will be legitimate to differentiate the series term-by-term with respect to ϕ; and similar differentiations, for similar reasons, will be made in what follows without further comment.

Considerations of symmetry immediately suggest that $A_1 = A_2 = \ldots = 0$; however, we shall retain these terms for the present, as it is not assumed that the solution is unique. Later it will be shown that $A_n = 0$ in general, and also that $\alpha_n = 0$ if $n \neq 1$.

For later use we shall need to know, for each point of the shock-wave surface, a vector normal to the surface, and two perpendicular tangent vectors. A normal vector to the shock-wave surface at (r,θ,ϕ) is, by Eq. (2),

$$\underline{\nabla}\left[\theta - \theta_W - \sum_{0}^{\infty}(\alpha_n \cos n\phi + A_n \sin n\phi)\right],$$

where

$$\underline{\nabla} = \left(\frac{\partial}{\partial r}, \quad \frac{1}{r}\frac{\partial}{\partial \theta}, \quad \frac{1}{r \sin\theta}\frac{\partial}{\partial \phi}\right)$$

in spherical coordinates.[6] Simplifying this, and multiplying it by r, a normal vector $\underline{n}$ is found to be

$$\underline{n} = \left[0, 1, \csc\theta \cdot \sum_{0}^{\infty} n(\alpha_n \sin n\phi - A_n \cos n\phi)\right]. \tag{3}$$

A vector perpendicular to this, which is therefore a tangent vector, is

$$\underline{t_1} = (1, 0, 0); \tag{4}$$

and a perpendicular tangent vector is then

$$\underline{t_2} = \underline{t_1} \times \underline{n} = \left[0, -\csc\theta \cdot \sum_{0}^{\infty} n(\alpha_n \sin n\phi - A_n \cos n\phi), 1\right]. \tag{5}$$

Finally, we need a similar triad of vectors for the general point on the cone. Now, Eq. (2) specializes to Eq. (1) if θ_w is replaced by θ_s, α_1 is replaced by ϵ, and all the other α's and A's are taken to be zero. Making the same replacements in Eqs. (3), (4), and (5), we obtain

$$\underline{n} = (0, 1, \epsilon \csc\theta \sin\phi), \quad \underline{t_1} = (1, 0, 0), \quad \underline{t_2} = (0, -\epsilon \csc\theta \sin\phi, 1) \tag{6}$$

as, respectively, normal and perpendicular tangent vectors to the cone surface at the point (r, θ, ϕ).

3. The differential equations

Let (u,v,w) be the components of the air velocity in the directions of increasing r, θ, ϕ, at the point (r, θ, ϕ) between the cone and the shock wave; and let p and ρ denote the pressure and density there. We are assuming that the effects of viscosity can be neglected (in the flow between the shock wave and the cone); thus the equations of motion are, as in [K.C.],[7]

$$\left.\begin{aligned}
&u\frac{\partial u}{\partial r} + \frac{v}{r}\frac{\partial u}{\partial \theta} + \frac{w}{r\sin\theta}\frac{\partial u}{\partial \phi} + \frac{1}{\rho}\frac{\partial p}{\partial r} - \frac{1}{r}(v^2 + w^2) = 0,\\
&u\frac{\partial v}{\partial r} + \frac{v}{r}\frac{\partial v}{\partial \theta} + \frac{w}{r\sin\theta}\frac{\partial v}{\partial \phi} + \frac{1}{\rho r}\frac{\partial p}{\partial \theta} + \frac{1}{r}(uv - w^2\cot\theta) = 0,\\
&u\frac{\partial w}{\partial r} + \frac{v}{r}\frac{\partial w}{\partial \theta} + \frac{w}{r\sin\theta}\frac{\partial w}{\partial \phi} + \frac{1}{\rho r\sin\theta}\frac{\partial p}{\partial \phi} + \frac{1}{r}(uw + vw\cot\theta) = 0.
\end{aligned}\right\} \tag{7}$$

6/ By the components of a vector function of a point P, in spherical coordinates, we mean the components of the vector in the directions of increasing r, θ, and ϕ at P.

7/ For the derivation of these equations see "Report of the Committee on Hydrodynamics," National Research Council, Washington (1932), p. 267. This derivation assumes incompressibility, but actually applies to the present case also.

And the equation of continuity is

$$\frac{\partial}{\partial r}(\rho r^2 u \sin\theta) + \frac{\partial}{\partial\theta}(\rho r v \sin\theta) + \frac{\partial}{\partial\phi}(\rho r w) = 0. \tag{8}$$

There is also an equation of state, which will be discussed later.

In the nonyaw case (that is, assuming $\epsilon = 0$), Taylor and Maccoll[1/] have obtained a solution, which we shall assume to be unique. Using barred letters $\bar{u}$, $\bar{v}$, and so forth, to refer to the nonyaw case, and primes to denote differentiation with respect to θ, we summarize their solution briefly, for convenience.

In the nonyaw case, $\bar{u}$, $\bar{v}$, $\bar{w}$, $\bar{p}$, $\bar{\rho}$ are functions of θ alone; and $\bar{w} = 0$. Further,

$$\left.\begin{aligned} \bar{v} &= \bar{u}' \\ \text{and} \qquad \bar{p}'/\bar{\rho} &= -\bar{u}'(\bar{u} + \bar{u}''), \end{aligned}\right\} \tag{9}$$

expressing the equations of motion,[8/] and

$$\bar{u}'' + [\cot\theta + (\ln\bar{\rho})']\bar{u}' + 2\bar{u} = 0, \tag{10}$$

expressing the equation of continuity. Moreover, the flow is adiabatic, and hence isentropic; so

$$\bar{p}/\bar{\rho}^{\gamma} = \text{constant}, \tag{11}$$

where γ, the ratio of specific heats, is taken to be 1.405.

The Bernoulli equation gives

$$\frac{1}{2}(\bar{u}^2 + \bar{v}^2) + \frac{\gamma}{\gamma - 1}\frac{\bar{p}}{\bar{\rho}} = \text{constant} = \frac{1}{2}c^2, \tag{12}$$

where

$$c^2 = U^2 + 2a_1^2/(\gamma - 1),$$

a_1 being the velocity of sound in the undisturbed air. From Eqs. (9), (11), and (12) one obtains

$$(\ln\bar{\rho})' = -\frac{2}{\gamma - 1}\frac{\bar{u}'(\bar{u} + \bar{u}'')}{c^2 - \bar{u}^2 - \bar{u}'^2}, \tag{13}$$

8/ The first of these equations shows that the nonyaw motion is necessarily irrotational.

Equations (10) and (13) combined enable $\bar{u}$, $\bar{u}'$, and so forth, and the semiangle θ_w of the shock-wave cone to be determined by step-by-step integration once the boundary conditions are known. These boundary conditions are:

$$\left.\begin{array}{l} \text{When } \theta = \theta_s, \quad \bar{u}' = 0. \\ \text{When } \theta = \theta_w, \begin{cases} \bar{u} = U\cos\theta, \\ U\rho_1 \sin\theta + \bar{\rho}\bar{v} = 0, \\ \bar{p} - p_1 = U\rho_1 \sin\theta(\bar{v} + U\sin\theta), \\ U^2\sin^2\theta = \left[(\gamma-1)p_1 + (\gamma+1)\bar{p}\right]/2\rho_1. \end{cases} \end{array}\right\} \quad (14)$$

The additional relations:

$$\left.\begin{array}{l} \text{When } \theta = \theta_w, \begin{cases} \bar{u}' = -\dfrac{1}{\gamma+1}\left[\dfrac{2a_1^2}{U\sin\theta} + (\gamma-1)U\sin\theta\right], \\ (\ln\bar{\rho})' = -\dfrac{2}{\gamma+1}\cot\theta, \end{cases} \end{array}\right\} \quad (15)$$

follow easily,[9/] and will be useful.

We shall regard $\bar{u}$, $\bar{u}'[=\bar{v}]$, $\bar{p}$, and $\bar{\rho}$ as known functions of θ (for given θ_s and U/a_1), and θ_w as a known constant. (These quantities have been tabulated by Taylor and Maccoll; and more extensive tabulations have since been made.)

One more equation remains — the equation of state. In the nonyaw case, we had $\bar{p}/\bar{\rho}^\gamma$ a constant. Now, however, p/ρ^γ will no longer be universally constant, since the shock wave will alter the entropy by amounts which vary with the angle of incidence, and hence with ϕ. But it is still postulated that the motion is adiabatic as regards each air particle. Since the motion is steady, the particle paths are the streamlines, so that the assumption can be formulated as: along a streamline,

$$\frac{dp}{p} = \gamma\frac{d\rho}{\rho}. \quad (16)$$

A streamline direction is given by:

$$\frac{dr}{u} = \frac{rd\theta}{v} = \frac{r\sin\theta\, d\phi}{w};$$

9/ See Karush and Critchfield, The drag coefficient for a cone moving with high velocity, NDRC Report A-126 (OSRD-1104), Eq. (12), for the first of these equations.

hence

$$\frac{\gamma p}{\rho} = \frac{dp}{d\rho} = \frac{\frac{\partial p}{\partial r}\,dr + \frac{\partial p}{\partial \theta}\,d\theta + \frac{\partial p}{\partial \phi}\,d\phi}{\frac{\partial \rho}{\partial r}\,dr + \frac{\partial \rho}{\partial \theta}\,d\theta + \frac{\partial \rho}{\partial \phi}\,d\phi} \qquad \text{along a streamline}$$

$$= \frac{u\frac{\partial p}{\partial r} + \frac{v}{r}\frac{\partial p}{\partial \theta} + \frac{w}{r\sin\theta}\frac{\partial p}{\partial \phi}}{u\frac{\partial \rho}{\partial r} + \frac{v}{r}\frac{\partial \rho}{\partial \theta} + \frac{w}{r\sin\theta}\frac{\partial \rho}{\partial \phi}}.$$

Here $\partial p/\partial r = \partial\rho/\partial r = 0$. Further, w, $\partial p/\partial\phi$, $\partial\rho/\partial\phi$ are all small if ϵ is small (since they are zero if ϵ is zero), so their products may be neglected. Thus, for small ϵ, the equation simplifies to

$$\frac{1}{p}\frac{\partial p}{\partial \theta} = \frac{\gamma}{\rho}\frac{\partial \rho}{\partial \theta}. \tag{16'}$$

Integrating with respect to θ, we see that $\ln p - \gamma \ln \rho$ is independent of θ; and it is also independent of r, since the whole motion is. That is, using Eq. (11) in the form $\ln \bar{p} - \gamma \ln \bar{\rho} =$ constant, the quantity $\ln(p/\bar{p}) - \gamma \ln(\rho/\bar{\rho})$ is independent of r and θ. Further, as a function of ϕ, it is periodic with period 2π. Thus the same argument that was used in establishing the shock-wave equation in Sec. 2 shows that

$$\ln\left(\frac{p}{\bar{p}}\right) - \gamma \ln\left(\frac{\rho}{\bar{\rho}}\right) = \sum_{0}^{\infty} (d_n \cos n\phi + D_n \sin n\phi), \tag{17}$$

where d_n and D_n are constants (for fixed ϵ) and where $D_0 = 0$ has been introduced for convenience.

The equations to be satisfied (apart from the boundary conditions, which will be considered later) are Eqs. (7), (8), and (17).

4. Substitution

Since $u = \bar{u}$ when $\epsilon = 0$, the same argument as before shows that

$$u - \bar{u} = \sum_{0}^{\infty} (x_n \cos n\phi + X_n \sin n\phi),$$

where x_n and X_n are independent of ϕ, and also of r, and are small if ϵ is small. Thus, for fixed ϵ, they are functions of θ only. As before, $X_0 = 0$ has been introduced for convenience.

Similar arguments apply to v, w, p, ρ. Thus we may write

$$\left.\begin{aligned} u &= \bar{u} + \sum_0^\infty (x_n \cos n\phi + X_n \sin n\phi), \\ v &= \bar{v} + \sum_0^\infty (y_n \cos n\phi + Y_n \sin n\phi), \\ w &= \sum_0^\infty (-Z_n \cos n\phi + z_n \sin n\phi), \\ p &= \bar{p} + \sum_0^\infty (\eta_n \cos n\phi + H_n \sin n\phi), \\ \rho &= \bar{\rho} + \sum_0^\infty (\xi_n \cos n\phi + \Xi_n \sin n\phi), \end{aligned}\right\} \qquad (18)$$

where x_n, X_n, y_n, Y_n, z_n, Z_n, η_n, H_n, ξ_n, Ξ_n, are small if ϵ is small, and are (for fixed ϵ) functions of θ only. Here X_0, Y_0, z_0, H_0, Ξ_0 are identically zero, but are introduced for convenience. The peculiar-looking choice of symbols in the expansion of w is likewise for later convenience. (It should be remembered that $\bar{w} = 0$.)

From now on it will be assumed that ϵ is small enough for the products of any two of the quantities x_n, X_n, ..., Ξ_n, α_n, A_n to be negligible. Later it will be shown that these quantities are in general all zero except for x_1, y_1, z_1, η_1, ξ_1, α_1, and that these are of the same order of magnitude as ϵ; thus the restriction on ϵ amounts to requiring ϵ^2 to be negligible.

Now we substitute the expressions (18) in Eqs. (7), (8), and (17), and simplify the results.

In the first of Eqs. (7), we note that $\partial u/\partial r = 0 = \partial p/\partial r$ and that the terms $w\,\partial u/\partial\phi$ and w^2 are negligible (being products of small quantities). Thus, on multiplying by r, $v\,\partial u/\partial\theta - v^2 = 0$, and so $\partial u/\partial\theta = v$. Substituting from Eq. (18),

$$\bar{u}' + \sum_0^\infty (x_n' \cos n\phi + X_n' \sin n\phi) = \bar{v} + \sum_0^\infty (y_n \cos n\phi + Y_n \sin n\phi).$$

The terms that do not vanish with ϵ must cancel, since $\bar{u}$, $\bar{v}$, and so forth, satisfy the equations of motion with $\epsilon = 0$. This is, of course, confirmed by Eq. (9).

Since the remaining equation holds identically in ϕ, the coefficients of $\cos n\phi$ and of $\sin n\phi$ can be equated. Thus[10]

$$\left.\begin{aligned} y_n &= x_n' \\ Y_n &= X_n' \end{aligned}\right\} (n = 0, 1, 2, \ldots). \tag{19a}$$

In a similar way, the other equations of Eqs. (7), and Eqs. (8) and (17), give

$$\bar{u}'y_n' + (\bar{u}' + \bar{u})y_n + \bar{u}'x_n + \eta_n'/\bar{\rho} - \zeta_n\bar{p}'/\bar{\rho}^2 = 0, \tag{19b}$$

$$\bar{u}'z_n' + (\bar{u} + \bar{u}' \cot\theta)z_n - n\eta_n/\bar{\rho}\sin\theta = 0, \tag{19c}$$

$$y_n' + y_n[\cot\theta + (\ln\bar{\rho})'] + 2x_n + nz_n \csc\theta + \bar{v}(\zeta/\bar{\rho})' = 0, \tag{19d}$$

$$\eta_n/\bar{p} - \gamma\zeta_n/\bar{\rho} = d_n, \tag{19e}$$

together with exactly the same equations for the capital letters (that is, with x_n replaced by X_n, y_n by Y_n, and so forth, and finally d_n replaced by D_n throughout).

5. The boundary conditions

The flow must satisfy the requirements that at the cone the normal velocity is to be zero, and at the shock wave, the standard Rankine-Hugoniot shock conditions are to be obeyed.

(a) At the cone. — From Eqs. (1) and (6), the general point of the cone is given by $\theta = \theta_s + \epsilon\cos\phi$, and a normal vector there is $\underline{n} = (0, 1, \epsilon\csc\theta\sin\phi)$. Thus, when $\theta = \theta_s + \epsilon\cos\phi$, the scalar product of the velocity with $\underline{n}$ must be zero — that is, $v + \epsilon w\csc\theta\sin\phi = 0$, or $v = 0$, since ϵw is negligible. But the value of v when $\theta = \theta_s + \epsilon\cos\phi$, is (neglecting ϵ^2) $v_s + (\epsilon\cos\phi)v_s'$, where v_s, v_s' denote the values of v and v' when $\theta = \theta_s$. Substitution from Eq. (18) gives, on simplification,

$$\text{When } \theta = \theta_s, \left\{\begin{aligned} &y_1 + \epsilon\bar{v}' = 0, \\ &y_n = 0 \text{ if } n \neq 1, \\ &Y_n = 0 \text{ (all } n). \end{aligned}\right\} \tag{20}$$

10/ The argument just given does not apply to the coefficients of $\sin(0\cdot\phi)$; but since $Y_0 = 0 = X_0'$, Eq. (19c) holds even when $n = 0$. Similar considerations apply to the subsequent equations.

The first of these equations can be slightly simplified on using the relations $\bar{v}' = \bar{u}'' = -2\bar{u}$ at θ_s, from Eqs. (10) and (14). Thus

$$\text{When } \theta = \theta_s, \quad y_1 = 2\epsilon\bar{u}_s. \tag{20}$$

(b) At the shock wave. -- As in [K.C.],[11] the Rankine-Hugoniot equations which hold at the shock-wave surface can be given the form

$$\left.\begin{array}{ll} \text{tangential velocity continuous,} & \\ \rho_1 r_1 = \rho_2 r_2, & \text{("continuity")} \\ p_2 - p_1 + \rho_1 r_1 (r_2 - r_1) = 0, & \text{("impulse")} \\ r_2 = \dfrac{1}{\gamma + 1}\left\{\dfrac{2a_1^2}{r_1} + (\gamma - 1) r_1\right\}, & \text{("energy")} \end{array}\right\} \tag{21}$$

where the suffixes 1 and 2 refer to the two sides of the shock wave (side 1 facing the undisturbed uniform air stream), r_1 and r_2 are the normal velocities, and a_1 is the undisturbed sound velocity (so that $a_1^2 = \gamma p_1/\rho_1$).

Now, by Eq. (2), the general point of the shock-wave surface is given by $\theta = \theta_w + \sum_0^\infty (\alpha_n \cos n\phi + A_n \sin n\phi)$; and two tangent vectors there are $\underline{t_1}$ and $\underline{t_2}$ given by Eqs. (4) and (5). Thus the first of Eqs. (21) is equivalent to the two equations:

$$\text{When} \quad \theta = \theta_w + \sum_0^\infty (\alpha_n \cos n\phi + A_n \sin n\phi),$$

$$\left.\begin{array}{l} (U\cos\theta,\ -U\sin\theta,\ 0)\cdot \underline{t_1} = (u,v,w)\cdot \underline{t_1}, \\ (U\cos\theta,\ -U\sin\theta,\ 0)\cdot \underline{t_2} = (u,v,w)\cdot \underline{t_2}. \end{array}\right\} \tag{22}$$

For the other equations of Eqs. (21) we observe that similarly

$$r_1 = (U\cos\theta, -U\sin\theta, 0)\cdot \underline{n} \quad \text{and} \quad r_2 = (u,v,w)\cdot \underline{n},$$

where $\underline{n}$ is given by Eq. (3); for Eq. (3) makes $\underline{n}$ a unit vector, to the present order of approximation.

We now substitute from Eqs. (18) in Eqs. (22) and (21), and use the principle that, for example, the value of u when

$$\theta = \theta_w + \sum_0^\infty (\alpha_n \cos n\phi + A_n \sin n\phi)$$

11/ See Aerodynamic theory, edited by W. F. Durand (Berlin, 1935), vol. 3, pp. 237-238, for a derivation of these equations.

is

$$u = u_w + u_w' \sum_0^\infty (\alpha_n \cos n\phi + A_n \sin n\phi),$$

neglecting products of small quantities. After this substitution, the terms that do not vanish with ϵ will cancel, since the nonyaw solutions $\bar{u}$, $\bar{v}$, and so forth, satisfy the same boundary conditions (21) with $\epsilon = 0$. The coefficients of $\cos n\phi$ and of $\sin n\phi$ can then be equated; and we obtain

$$\text{When } \theta = \theta_w, \quad \left\{ \begin{array}{l} x_n = -\alpha_n(\bar{u}' + U \sin\theta), \\ z_n \sin\theta = n\alpha_n(\bar{v} + U \sin\theta), \\ \alpha_n [-\bar{v} \cot\theta + \bar{v}' + \bar{v}(\ln \bar{\rho})'] + y_n + \zeta_n \bar{v}/\bar{\rho} = 0, \\ \alpha_n\left(\frac{\bar{p}'}{\bar{\rho}\bar{v}} + \bar{v}' + \bar{v} \cot\theta + 2U \cos\theta\right) + y_n + \eta_n/\bar{\rho}\bar{v} = 0, \\ \alpha_n\left\{\bar{v}' - \frac{2a_1^2 \cot\theta}{(\gamma+1)U \sin\theta} + \frac{\gamma - 1}{\gamma + 1} U \cos\theta\right\} + y_n = 0, \end{array} \right\} \quad (23)$$

together with exactly the same equations with the small letters (α_n, x_n, and so forth) replaced by capitals (A_n, X_n, and so forth) throughout. It is, of course, understood that all quantities here are evaluated with $\theta = \theta_w$.

Thus the capital letters X_n, Y_n, and so forth, obey exactly the same differential equations as the small letters, and also exactly the same boundary conditions — with one exception:

$$\text{When } \theta = \theta_s, \quad Y_1 = 0, \quad \text{though } y_1 = 2\epsilon\bar{u} \quad (\text{Eq. } 20).$$

Bearing this in mind, we shall restrict our attention to the small letters exclusively for the present; it will then be easy to determine the capitals.

To simplify Eqs. (23), we use the properties given by Eqs. (9), (10), (14), and (15) of the nonyaw solutions. Further, since it is easily seen that $\bar{u}_w' + U \sin\theta_w$ cannot be zero, the first of Eqs. (23) can be used to eliminate α_n from the others. The resulting simplified equations are

$$\text{When } \theta = \theta_w, \quad \left\{ \begin{array}{l} \alpha_n = -x_n/(\bar{u}' + U \sin\theta), \\ nx_n + z_n \sin\theta = 0, \\ 2x_n \cot\theta + y_n + \zeta_n \bar{u}'/\rho = 0, \\ -x_n \cot\theta + y_n + \eta_n/\bar{\rho}\bar{u}' = 0, \\ \frac{2x_n}{\gamma+1}(2\bar{u} - \bar{u}' \cot\theta) + y_n(\bar{u}' + U \sin\theta) = 0. \end{array} \right\} \quad (24)$$

6. The Bernoulli equation

Having simplified the boundary conditions, the next step is to simplify the differential equations.

Now, in Eq. (19b), use Eqs. (19a) and (19e) to eliminate y_n and ξ_n. This results in

$$\bar{u}'x_n'' + (\bar{u}'' + \bar{u})x_n' + \bar{u}'x_n + \frac{\eta_n'}{\bar{\rho}} - \frac{\bar{p}'}{\gamma\bar{\rho}}\left(\frac{\eta_n}{\bar{p}} - d_n\right) = 0. \tag{25}$$

But since $\bar{p}/\bar{\rho}^\gamma$ is constant [by Eq. (11)], it is easy to see that $\bar{p}'/\gamma\bar{\rho}\bar{p} = \bar{\rho}'/\bar{\rho}^2$ and that

$$\frac{\bar{p}'}{\gamma\bar{\rho}} = \frac{1}{\gamma - 1}\left(\frac{\bar{p}}{\bar{\rho}}\right)'.$$

Thus Eq. (25) can be written:

$$(\bar{u}'x_n'' + \bar{u}''x_n') + (\bar{u}x_n' + \bar{u}'x_n) + \left(\frac{\eta_n'}{\bar{\rho}} - \frac{\eta_n\bar{\rho}'}{\bar{\rho}^2}\right) + \frac{d_n}{\gamma - 1}\left(\frac{\bar{p}}{\bar{\rho}}\right)' = 0.$$

Integrating with respect to θ, we obtain

$$\bar{u}'x_n' + \bar{u}x_n + \eta_n/\bar{\rho} + \frac{d_n}{\gamma - 1}\frac{\bar{p}}{\bar{\rho}} + c_n = 0, \tag{26}$$

where c_n is a constant. To determine c_n, take $\theta = \theta_w$. For this value of θ, η_n and $y_n(= x_n')$ can be eliminated from Eq. (26) and the fourth of Eqs. (24), giving

$$x_n(\bar{u} + \bar{u}' \cot \theta) + \frac{d_n}{\gamma - 1}\frac{\bar{p}}{\bar{\rho}} + c_n = 0. \tag{27}$$

Again, ξ_n and η_n can be eliminated (still assuming $\theta = \theta_w$) between the third and fourth of Eqs. (24), on using Eq. (19c). The result of this elimination can be simplified by using properties of the nonyaw solution, namely,

$$\frac{\gamma\bar{p}}{\bar{\rho}} = \frac{\bar{p}'}{\bar{\rho}(\ln \bar{\rho})'} = -\bar{u}'(\bar{u} + \bar{u}'')/(\ln \bar{\rho})'$$

[which follow from Eqs. (9) and (11)]. In this way we obtain

$$x_n \cot\theta \cdot \left\{2(\bar{u} + \bar{u}'') - \bar{u}'(\ln \bar{\rho})'\right\} + y_n\left\{\bar{u} + \bar{u}'' + \bar{u}'(\ln \bar{\rho})'\right\} + d_n\bar{p}(\ln \bar{\rho})'/\bar{\rho} = 0. \tag{28}$$

Finally, we use Eqs. (10), (15), and the last of Eqs. (24) to eliminate $\bar{u}''$, $(\ln \bar{\rho})'$, and y_n in Eq. (28), and obtain on simplification

$$x_n(\bar{u} + \bar{u}' \cot \theta) + \frac{d_n}{\gamma - 1}\frac{\bar{p}}{\bar{\rho}} = 0 \quad \text{when} \quad \theta = \theta_w. \tag{29}$$

Comparison of Eqs. (27) and (29) now shows $c_n = 0$. Thus Eq. (26) reduces to

$$\bar{u}'x_n' + \bar{u}x_n + \eta_n/\bar{\rho} + \frac{d_n}{\gamma - 1}\frac{\bar{p}}{\bar{\rho}} = 0, \tag{30}$$

holding for all values of θ between θ_s and θ_w. This equation is analogous to the first variation of the Bernoulli equation, from which it could in fact have been derived (care being needed, however, since the present flow is neither irrotational nor isentropic).

For future use, we use Eq. (30) to calculate $(\xi_n/\bar{\rho})'$. From Eq. (19e),

$$\frac{\xi_n}{\bar{\rho}} = \frac{\eta_n}{\gamma\bar{p}}\left(-\frac{d_n}{\gamma}\right)$$

$$= -\frac{\bar{\rho}}{\gamma\bar{p}}\left\{\bar{u}'x_n' + \bar{u}x_n + \frac{d_n}{\gamma - 1}\frac{\bar{p}}{\bar{\rho}}\right\} - \frac{d_n}{\gamma},$$

from Eq. (30). Thus

$$\xi_n/\bar{\rho} = -(\bar{u}'x_n' + \bar{u}x_n)\Big/\frac{\gamma\bar{p}}{\bar{\rho}} - \frac{d_n}{\gamma - 1}, \tag{31}$$

and therefore

$$(\xi_n/\bar{\rho})' = -\left\{\bar{u}'x_n'' + (\bar{u}'' + \bar{u})x_n' + \bar{u}'x_n\right\}\Big/\frac{\gamma\bar{p}}{\bar{\rho}} - (\bar{u}'x_n' + \bar{u}x_n)\left(\frac{\bar{\rho}}{\gamma\bar{p}}\right)'.$$

From the constancy of $\bar{p}/\bar{\rho}^{\gamma}$, it follows that

$$\left(\frac{\bar{\rho}}{\gamma\bar{p}}\right)' = -(\gamma - 1)(\ln \bar{\rho})'\bar{\rho}/\gamma\bar{p};$$

further,

$$\frac{\bar{\rho}}{\gamma\bar{p}} = \frac{\bar{\rho}(\ln \bar{\rho})'}{\bar{p}'} = \frac{(\ln \bar{\rho})'}{\bar{u}'(\bar{u} + \bar{u}'')},$$

from Eq. (9). Hence finally

$$(\xi_n/\bar{\rho})' = \frac{(\ln \bar{\rho})'}{\bar{u}'(\bar{u} + \bar{u}'')}\left[\left\{\bar{u}'x_n'' + (\bar{u}'' + \bar{u})x_n' + \bar{u}'x_n\right\} - (\gamma - 1)(\bar{u}'x' + \bar{u}x)(\ln \bar{\rho})'\right]. \tag{32}$$

7. Determination of $nx_n + z_n \sin\theta$

On combining Eqs. (19c) and (30) to eliminate η_n, we obtain

$$\bar{u}'z_n' \sin\theta + (\bar{u}\sin\theta + \bar{u}'\cos\theta)z_n + n\left(\bar{u}'x_n' + \bar{u}x_n + \frac{d_n}{\gamma - 1}\frac{\bar{p}}{\bar{\rho}}\right) = 0. \quad (33)$$

Now define

$$t_n = nx_n + z_n \sin\theta. \quad (34)$$

Then Eq. (33) can be written in the form

$$\bar{u}'t_n' + \bar{u}t_n + \frac{nd_n}{\gamma - 1}\frac{\bar{p}}{\bar{\rho}} = 0, \quad (35)$$

an equation which enables t_n to be determined explicitly in terms of quadratures. The usual integrating factor is

$$\frac{1}{\bar{u}'}\exp\left\{\int\frac{\bar{u}}{\bar{u}'}d\theta\right\} = \frac{1}{\bar{u}'}\exp\left\{-\frac{1}{2}\int\frac{\bar{u}' + \bar{u}'[\cot\theta + (\ln\bar{\rho})']}{\bar{u}'}d\theta\right\}$$
$$= 1/\bar{u}'\sqrt{-\bar{u}'\bar{\rho}\sin\theta},$$

by Eq. (10), the constant of integration being irrelevant here. (It should be observed that $\bar{u}'$ is negative.) Thus, Eq. (35) can be written

$$(t_n/\sqrt{-\bar{u}'\bar{\rho}\sin\theta})' + \frac{nd_n}{\gamma - 1}\frac{\bar{p}}{\bar{\rho}\bar{u}'}\cdot\frac{1}{\sqrt{-\bar{u}'\bar{\rho}\sin\theta}} = 0. \quad (36)$$

Observing that $t_n = 0$ when $\theta = \theta_w$ [from Eqs. (24)], we obtain

$$nx_n + z_n\sin\theta = t_n = \frac{nd_n}{\gamma - 1}\sqrt{-\bar{u}'\bar{\rho}\sin\theta}\int_{\theta_w}^{\theta}\frac{\bar{p}d\theta}{-\bar{\rho}\bar{u}'\sqrt{-\bar{u}'\bar{\rho}\sin\theta}}. \quad (37)$$

When $\theta = \theta_s$, the integral here becomes singular, since $\bar{u}'$ vanishes; but multiplication by $\sqrt{-\bar{u}'}$ restores the continuity as $\theta \to \theta_s$. Thus Eq. (37) enables t_n/d_n to be calculated over the entire range from θ_w to θ_s. As a check on the values near θ_s, it follows from Eq. (35) that

$$t_n = -\frac{nd_n}{\gamma - 1}\frac{\bar{p}_s}{\bar{\rho}_s\bar{u}_s} \quad \text{when} \quad \theta = \theta_s. \quad (38)$$

8. Determination of x_n, and so forth

In Eq. (19d) all the unknown variables can now be expressed in terms of x_n and its derivatives. In fact, $y_n = x_n'$ by Eq. (19a); $(t_n/\bar{\rho})'$ has been found in Eq. (32); and, from Eq. (34), $z_n = (t_n - nx_n)\csc\theta$, where t_n/d_n is a known function of θ [see Eq. (37)]. After simplification [remembering that $\bar{v} = \bar{u}'$, by Eq. (9)], we obtain

$$\left.\begin{aligned} x_n''\{\bar{u}'' + \bar{u}'\ln\bar{\rho}' + \bar{u}\} + x_n'\{(\bar{u}+\bar{u}')(\cot\theta + 2\ln\bar{\rho}') - (\gamma-1)\bar{u}'(\ln\bar{\rho}')^2\} \\ + x_n\{(2 - n^2\csc^2\theta)(\bar{u}+\bar{u}'') + \bar{u}'\ln\bar{\rho}' - (\gamma-1)\bar{u}(\ln\bar{\rho}')^2\} \\ + nt_n(\bar{u}+\bar{u}'')\csc^2\theta = 0, \end{aligned}\right\} \quad (39)$$

where $\ln\bar{\rho}'$ has been used as an abbreviation for $(\ln\bar{\rho})'$.

To bring this equation to a form more suitable for computation, we first eliminate $\bar{u}''$, using Eq. (10); this results in

$$\left.\begin{aligned} x_n''(\bar{u}+\bar{u}'\cot\theta) + x_n'\{(\bar{u}+\bar{u}'\cot\theta + \bar{u}'\ln\bar{\rho}')(\cot\theta + 2\ln\bar{\rho}') + (\gamma-1)\bar{u}'(\ln\bar{\rho}')^2\} \\ + x_n\{(2 - n^2\csc^2\theta)(\bar{u}+\bar{u}'\cot\theta + \bar{u}'\ln\bar{\rho}') - \bar{u}'\ln\bar{\rho}' + (\gamma-1)\bar{u}(\ln\bar{\rho}')^2\} \\ + nt_n(\bar{u}+\bar{u}'\cot\theta + \bar{u}'\ln\bar{\rho}')\csc^2\theta = 0. \end{aligned}\right\} \quad (39')$$

Next, from Eqs. (10) and (13), $(\ln\bar{\rho})'$ can be expressed in terms of $\bar{u}$ and $\bar{u}'$:

$$(\ln\bar{\rho})' = \lambda(\bar{u} + \bar{u}'\cot\theta), \quad (40)$$

where

$$\lambda = 2\bar{u}'/\{(\gamma-1)(c^2 - \bar{u}^2) - (\gamma+1)\bar{u}'^2\}.$$

[Here c^2 is given by Eq. (12).]

Finally, the leading coefficient in Eq. (39') cannot vanish, since if $\bar{u} + \bar{u}'\cot\theta = 0$, the velocity in the nonyaw case will be parallel to its original direction at some point between the shock wave and the cone, which can be seen (from the work of Taylor and Maccoll) not to occur. Thus we may divide Eq. (39') through by $\bar{u} + \bar{u}'\cot\theta$, without impairing the regularity

of the coefficients; and, on using Eq. (40) to eliminate $(\ln \bar{\rho})'$, we then have

$$\left.\begin{aligned} &x_n'' + x_n'\{\cot\theta + \lambda(2\bar{u} + 3\bar{u}'\cot\theta) + (\gamma+1)\lambda^2\bar{u}'(\bar{u} + \bar{u}'\cot\theta)\} \\ &+x_n\{2 - n^2\csc^2\theta + \lambda\bar{u}'(1 - n\csc^2\theta) + (\gamma-1)\lambda^2\bar{u}(\bar{u} + \bar{u}'\cot\theta)\} \\ &\qquad\qquad + nt_n(1 + \lambda\bar{u}')\csc^2\theta = 0. \end{aligned}\right\} \quad (41)$$

From Eq. (29) and the last of Eqs. (24), the boundary conditions on x_n and $x_n'(=y_n)$ when $\theta = \theta_w$ are [on simplification by means of Eqs. (14)]

$$\text{When } \theta = \theta_w, \left\{\begin{aligned} x_n &= -\frac{d_n}{\gamma-1}\frac{\bar{p}}{\bar{\rho}}\frac{\tan\theta}{\bar{u}' + U\sin\theta}, \\ x_n' = y_n &= \frac{2d_n}{\gamma^2-1}\frac{\bar{p}}{\bar{\rho}}\frac{2U\sin\theta - \bar{u}'}{(\bar{u}' + U\sin\theta)^2}. \end{aligned}\right\} \quad (42)$$

The only remaining requirement on x_n is the condition at θ_s, which [by Eqs. (19a), (20), and (20')] is

$$\text{When } \theta = \theta_s, \left\{\begin{aligned} x_n' &= 0 \quad \text{if } n \neq 1, \\ x_1' &= 2\epsilon\bar{u}_s. \end{aligned}\right\} \quad (43)$$

Suppose temporarily that $n \neq 1$ and that $d_n \neq 0$. Then, since t_n is a known multiple of d_n [by Eq. (37)], the differential equation, Eq. (41), together with the boundary conditions at θ_w [Eqs. (42)] determines x_n/d_n uniquely. The additional requirement, given by Eqs. (43), that $(x_n/d_n)' = 0$ when $\theta = \theta_s$, can thus in general not be met. Hence, barring possible exceptional values of the parameters θ_s and U/a_1, $d_n = 0$ whenever $n \neq 1$. From Eqs. (41) and (42) it now follows that $x_n = 0$ if $n \neq 1$; and it readily follows that y_n, z_n, ξ_n, η_n, and α_n are all identically zero if $n \neq 1$.

Since the capital letters X_n, Y_n, Z_n, and so forth, satisfy exactly the same equations as x_n, y_n, z_n, and so forth, except that $X_n' = 0$ when $\theta = \theta_s$ even when $n = 1$, the same argument shows that in general they are all zero — even when $n = 1$.

We shall later return to a brief discussion of the exceptional case, in which the solution of Eqs. (41) and (42) automatically satisfies $(x_n')_s = 0$. Apart from this, we shall always assume this is not the case, and thus that x_1, y_1, z_1, ξ_1, η_1, α_1, d_1 are the only unknowns which are not zero.

Finally, consider the case $n = 1$ for the small letters. Here $d_1 \neq 0$ [else $x_1 = 0$, violating Eqs. (43)]. Equations (41) and (42) thus determine x_1/d_1 uniquely; and Eqs. (43) then determine d_1 as $2\epsilon\bar{u}_s/(x_1/d_1)'_s$. Since this is the only occurrence of ϵ in these equations, d_1/ϵ is independent of ϵ, from which it easily follows that x_1/ϵ, y_1/ϵ, α_1/ϵ, and so forth, are all independent of ϵ (to the present order of approximation). Moreover, x_1, y_1, and so forth, are of the same order of magnitude as ϵ, as was forecast earlier; thus the preceding theory applies whenever ϵ^2 is negligible. Write

$$\left.\begin{aligned} &x_1/\epsilon = x, \quad y_1/\epsilon = y, \quad z_1/\epsilon = z, \\ &\xi_1/\epsilon = \xi, \quad \eta_1/\epsilon = \eta, \quad t_1/\epsilon = t, \\ &\alpha_1/\epsilon = \alpha, \quad d_1/\epsilon = d. \end{aligned}\right\} \tag{44}$$

Thus x, y, and so forth, are functions of θ alone, and α and d are constants (for given θ_s and U/a_1). The expressions (18) now simplify to

$$\left.\begin{aligned} &u = \bar{u} + \epsilon x \cos\phi, \quad p = \bar{p} + \epsilon\eta\cos\phi, \\ &v = \bar{v} + \epsilon y \cos\phi, \quad \rho = \bar{\rho} + \epsilon\xi\cos\phi, \\ &\qquad w = \epsilon z \sin\phi; \end{aligned}\right\} \tag{45}$$

and, from Eq. (2), the equation of the shock wave now reduces to

$$\theta = \theta_w + \epsilon\alpha\cos\phi. \tag{46}$$

Comparison with Eq. (1) shows that <u>the shock-wave surface is a circular cone, of semiangle θ_w, with a "yaw" δ given by</u>

$$\delta = \epsilon\alpha (= \alpha_1). \tag{47}$$

(By the "yaw" of this conical surface is meant the angle between its axis of symmetry and the direction of motion of the undisturbed flow.) Furthermore, <u>the plane of yaw of the shock wave is the same as the plane of yaw of the cone</u>, as is, of course, to be expected from symmetry.

It should be noted that <u>the shock-wave angle is unchanged from its non-yaw value θ_w</u> — always neglecting ϵ^2.

Incidentally, the initial assumptions in the [K.C.] setup have at this point been justified.

9. The problem for computation

We have now to solve Eqs. (41), (42), and (43) for the case $n = 1$. Expressing these equations in terms of the new variable $x(= x_1/\epsilon)$, the problem is to solve

$$\left.\begin{aligned} & x'' + x'[\cot\theta + \lambda\{2\bar{u} + 3\bar{u}'\cot\theta + (\gamma+1)\lambda\bar{u}'(\bar{u} + \bar{u}'\cot\theta)\}] \\ & + x[1 - \cot^2\theta + \lambda\{-\bar{u}'\cot^2\theta + (\gamma-1)\lambda\bar{u}(\bar{u} + \bar{u}'\cot\theta)\}] \\ & + \frac{d}{\gamma-1}\sqrt{-\bar{u}'\bar{\rho}\sin\theta}\,(1 + \lambda\bar{u}')\csc^2\theta \cdot \int_{\theta_w}^{\theta} \frac{\bar{p}\,d\theta}{-\bar{u}'\bar{\rho}\sqrt{-\bar{u}'\bar{\rho}\sin\theta}} = 0, \end{aligned}\right\} \tag{48}$$

where

$$\lambda = 2\bar{u}'/\{(\gamma-1)(c^2 - \bar{u}^2) - (\gamma+1)\bar{u}'^2\},$$

$$c^2 = U^2 + \frac{2a_1^2}{\gamma-1}, \tag{49}$$

subject to

$$\text{When } \theta = \theta_w, \quad \left\{\begin{aligned} x &= -\frac{d}{\gamma-1}\frac{\bar{p}}{\bar{\rho}}\tan\theta/(\bar{u}' + U\sin\theta), \\ x' &= \frac{2d}{\gamma^2-1}\frac{\bar{p}}{\bar{\rho}}\cdot\frac{2U\sin\theta - \bar{u}'}{(\bar{u}' + U\sin\theta)^2}, \end{aligned}\right. \tag{50}$$

and

$$\text{When } \theta = \theta_s, \quad x' = 2\bar{u}. \tag{51}$$

For the actual computation, it is preferable to work with nondimensional quantities. Thus we write Eq. (48) as

$$x'' + B_1x' + B_2x + B_3cd = 0, \tag{52}$$

where

$$B_1 = \cot\theta + \lambda\{2\bar{u} + 3\bar{u}'\cot\theta + (\gamma+1)\lambda\bar{u}'(\bar{u} + \bar{u}'\cot\theta)\},$$

$$B_2 = 1 - \cot^2\theta + \lambda\{-\bar{u}'\cot^2\theta + (\gamma-1)\lambda\bar{u}(\bar{u} + \bar{u}'\cot\theta)\},$$

$$B_3 = \frac{1}{\gamma-1}\sqrt{-\bar{u}'\bar{\rho}\sin\theta}\,(1 + \lambda\bar{u}')\csc^2\theta\int_{\theta_w}^{\theta}\frac{\bar{p}\,d\theta}{-\bar{u}'\bar{\rho}\sqrt{-\bar{u}'\bar{\rho}\sin\theta}}$$

(so that B_1, B_2, and B_3 are nondimensional), and solve Eqs. (50) and (52) for

Table I. Nonyaw quantities, coefficients, and complete solution for the case $\theta_s = 15^\circ$, $U/a_1 = 1.901$.

θ (deg)	$\bar{u}/c$	$-\bar{u}'/c$	$\bar{p}/p_1$	$\bar{\rho}/\rho_1$	B_1	$-B_2$	$-B_3$	$-x/c$	$y/c(=x'/c)$	$-t/c$	z/c	ξ/ρ_1	$\eta/\bar{p}$
θ_w	0.5294	0.3217	1.250	1.171	-7.883	6.816	0.0	0.021	0.478	0.0000	0.036	1.52	1.84
35	.5318	.3148	1.263	1.180	-4.226	6.213	.1	.024	.457	.0001	.042	1.46	1.75
34	.5372	.2998	1.289	1.197	-1.001	5.286	.3	.032	.440	.0002	.057	1.38	1.64
33	.5423	.2853	1.310	1.211	0.185	4.741	.4	.040	.440	.0003	.073	1.39	1.62
32	.5472	.2710	1.330	1.224	0.753	4.431	.5	.048	.447	.0004	.089	1.40	1.61
31	.5518	.2569	1.347	1.235	1.072	4.258	.6	.056	.457	.0006	.107	1.41	1.61
30	.5561	.2428	1.364	1.246	1.277	4.185	.7	.064	.470	.0007	.126	1.44	1.62
29	.5602	.2287	1.380	1.256	1.422	4.189	.9	.072	.486	.0009	.147	1.46	1.64
28	.5641	.2145	1.394	1.266	1.536	4.256	1.0	.081	.505	.0010	.169	1.48	1.66
27	.5677	.2001	1.409	1.275	1.634	4.381	1.2	.090	.525	.0012	.194	1.52	1.68
26	.5711	.1856	1.421	1.283	1.725	4.560	1.3	.099	.548	.0013	.223	1.57	1.72
25	.5742	.1709	1.435	1.292	1.815	4.795	1.6	.109	.575	.0016	.254	1.58	1.73
24	.5771	.1560	1.447	1.300	1.909	5.090	1.8	.119	.603	.0018	.288	1.62	1.76
23	.5800	.1408	1.459	1.307	2.011	5.450	2.1	.130	.634	.0020	.327	1.63	1.76
22	.5820	.1252	1.471	1.315	2.123	5.885	2.5	.141	.670	.0022	.371	1.64	1.77
21	.5840	.1093	1.481	1.321	2.251	6.408	2.9	.153	.713	.0025	.420	1.65	1.77
20	.5858	.0929	1.491	1.328	2.398	7.034	3.5	.166	.762	.0028	.477	1.66	1.77
19	.5873	.0759	1.500	1.334	2.570	7.789	4.2	.180	.819	.0031	.543	1.67	1.76
18	.5884	.0583	1.509	1.338	2.776	8.703	5.1	.195	.884	.0035	.618	1.66	1.75
17	.5893	.0400	1.514	1.342	3.025	9.819	6.4	.211	.962	.0039	.707	1.62	1.71
16	.5898	.0206	1.519	1.347	3.336	11.198	8.5	.228	1.058	.0047	.812	1.58	1.65
θ_s	.5900	.0000	1.521	1.347	3.732	12.928	5.5	.248	1.180	.0027	.948	1.47	1.54

RESTRICTED

x/cd. Equation (51) next determines d. This gives x/c and $y/c(=x'/c)$, and it is then easy to evaluate the remaining quantities. Thus $\eta/\bar{p}$ can be found from Eq. (30), z/c from Eqs. (34) and (37), and $\xi/\bar{\rho}$ from Eq. (19e). For practical purposes, the most important quantities are α and η_s, which respectively determine the direction of the shock-wave axis and the pressure on the cone. From Eqs. (24) and (47), the yaw δ of the shock wave is given by

$$\delta/\epsilon = \alpha = -x_w/(\bar{u}'_w + U \sin \theta_w) = \frac{d}{\gamma - 1} \frac{\bar{p}_w}{\bar{\rho}_w} \frac{\tan \theta_w}{(\bar{u}'_w + U \sin \theta_w)^2}, \tag{53}$$

the subscripts w denoting that the quantities are to be evaluated with $\theta = \theta_w$. Finally, the value η_s of η when $\theta = \theta_s$ will be, from Eqs. (30), (14), and (12),

$$\eta_s = -\left(\bar{\rho}_s \bar{u}_s x_s + \frac{d}{\gamma - 1} \bar{p}_s\right) = -\bar{\rho}_s\left[\bar{u}_s x_s + \frac{d}{2\gamma}(c^2 - \bar{u}_s^2)\right]. \tag{54}$$

The solution for the case $\theta_s = 15^\circ$, $U/a_1 = 1.901$, is given in Table I. The coefficients B_1, B_2, B_3, and the nonyaw quantities $\bar{u}/c$, $\bar{u}'/c$, $\bar{p}/p_1$, $\bar{\rho}/\rho_1$, are also listed.

The only difficulty in obtaining the solution is that the computation of B_1, B_2, and B_3 is rather laborious; fortunately, it turns out that (in the present case, at least) great accuracy is not needed for B_3. Accordingly the values of B_3 in Table I are merely approximate.

It would be very desirable to replace Eq. (48), with its rather complicated coefficients, by a more easily computed approximation. In the next two sections (Secs. 10, 11), we shall consider a number of possible approximations. Unfortunately none of them seems to be both really simple and safe.

The values of the constants θ_w, c/a_1, d, α in the present case are given in Table II.

Table II. Values of constants ($\theta_s = 15^\circ$, $U/a_1 = 1.901$).

θ_w (deg)	c/a_1	d	$\alpha(=\delta/\epsilon)$
35.43	2.924	0.00730	0.377

10. Departure from isentropy

For the values of θ_s and U/a_1 of immediate ballistic interest, the shock will be weak; and this implies[12/] that the flow will be very nearly isentropic. Thus one simplifying assumption, which should be applicable, consists in disregarding the nonuniformity of the entropy. In this section we shall outline the modifications which this simplifying assumption would entail.

We assume, accordingly, that p/ρ^γ is constant (between the shock wave and the cone), not merely for each air particle or streamline, but universally. (Here γ is fixed.) The previous argument showing that all capital letters, and all variables with suffixes other than 1, are all zero (in general) will be substantially unaffected; thus we now consider only the small letters with 1 as suffix.

The first change is that in the equation of state, Eq. (17), the left-hand side will now be independent of ϕ, as well as of r and θ. This amounts to requiring $d_1 = 0$. Thus Eq. (19e) reduces to

$$\eta_1/\bar{p} - \nu\zeta_1/\bar{\rho} = d_1 = 0, \tag{55}$$

the isentropic equation of state.

Next, the shock-wave conditions are modified by ~~simply omitting~~ the "energy" requirement [the last of Eqs. (21)].[13/] This amounts to omitting the last of Eqs. (24).

In the Bernoulli equation, Eq. (26), there is now no reason why c_1 should be zero; thus Eq. (26) must replace Eq. (30). This produces minor changes in $(\zeta_1/\bar{\rho})'$ [Eq. (32)] and in $x_1 + z_1 \sin\theta$ [Eq. (37)]. Finally, it is found that the differential equation, Eq. (48) [or Eq. (52)], is to be replaced by

$$x'' + B_1 x' + B_2 x + A_3 c_1 = 0, \tag{56}$$

12/ See reference in footnote 11.

13/ On the hypothesis of isentropy, a modified energy equation still holds, but merely gives information about the changes of internal energy of the medium.

where

$$A_3 = (\gamma - 1)\lambda^2(\bar{u} + \bar{u}'\cot\theta) + (1 + \lambda\bar{u}')\csc^2\theta \cdot \sqrt{-\bar{u}'\bar{\rho}\sin\theta} \int_{\theta_w}^{\theta} \frac{d\theta'}{-\bar{u}'\sqrt{-\bar{u}'\bar{\rho}\sin\theta}}$$

and that the boundary conditions, Eqs. (50), are to be replaced by

$$\text{When } \theta = \theta_w, \quad \left\{ \begin{array}{l} x = -c_1 \tan\theta/(\bar{u}' + U\sin\theta), \\ x' = \dfrac{2c_1}{\gamma + 1} \cdot \dfrac{(\gamma + 1)U\sin\theta - (2 - \gamma)\bar{u}'}{(\bar{u}' + U\sin\theta)^2}. \end{array} \right\} \tag{57}$$

The remaining boundary condition, Eq. (51), is unchanged.

Thus the assumption of isentropy, though it has slightly simplified the initial setup, has actually led to a slightly more complicated final differential equation than before.

It is nevertheless desirable to verify that the approximation of isentropy, though hardly a simplifying one, is valid; for this approximation is often made in problems of this type in which an exact solution is not feasible, and so should be checked whenever possible. Besides, this approximate theory is independent of the thermodynamical behavior of the air at the shock wave [which intervenes in the "exact" theory, in the derivation of the last of Eqs. (21)]. Thus if this approximation is shown to be close, the "exact" theory, will be shown to be relatively unaffected by any deviations from ideal gas behavior of the air at the shock wave.

The direct verification of this would involve solving Eqs. (56), (57), and (51) and comparing the results with the solution of Eqs. (48), (50), and (51). These two sets of equations resemble each other closely, so that this could be done without excessive labor.

However, it is less laborious, and probably sufficiently convincing, to verify merely that the entropy change in the "exact" theory is relatively small — that is, that d_1 is so small compared with $\gamma\xi_1/\bar{\rho}$ and $\eta_1/\bar{p}$ that Eq. (19c) is approximately equivalent to Eq. (55). Since

$$d_1 \Big/ \left(\frac{\eta_1}{\bar{p}}\right) = d \Big/ \left(\frac{\eta}{\bar{p}}\right),$$

this amounts to showing that $d/(\eta/\bar{p})$ is small throughout. Now for the case $\theta_s = 15^\circ$, $U/a_1 = 1.901$, we have $d = 0.0073$ (Table II) and the smallest value of $\eta/\bar{p}$ is 1.54 (Table I), attained for $\theta = \theta_s$. Thus $d/(\eta/\bar{p})$ never exceeds $0.0073/1.54 = 0.005$ in this case. Accordingly, one would in fact obtain a good approximation in this case by disregarding the variation of the entropy (in the flow between the shock wave and the cone).

For larger values of the Mach number U/a_1, the shock becomes stronger (unless θ_s is decreased), and the variation in the entropy can be expected to become larger. Thus the assumption of isentropy cannot be expected to give a valid approximation for very fast cones, unless they are very slender.

11. Irrotationality and other approximations

A second simplifying approximation often made in treating this and similar problems is to take the flow to be irrotational, so that the velocity may be regarded as (approximately) the gradient of a single scalar function. Thus it is of interest to see how close the flow is to being irrotational in the present case.

Now, if $\underline{v}$ denotes the velocity vector (u,v,w) we have

$$\text{curl } \underline{v} = \left[\frac{w}{r}\cot\theta + \frac{1}{r}\frac{\partial w}{\partial\theta} - \frac{1}{r\sin\theta}\frac{\partial v}{\partial\phi},\quad \frac{1}{r\sin\theta}\frac{\partial u}{\partial\phi} - \frac{\partial w}{\partial r} - \frac{w}{r},\quad \frac{v}{r} + \frac{\partial v}{\partial r} - \frac{1}{r}\frac{\partial u}{\partial\theta}\right].$$

$$= \frac{1}{r}\left[w\cot\theta + \frac{\partial w}{\partial\theta} - \csc\theta\,\frac{\partial v}{\partial\phi},\quad \csc\theta\,\frac{\partial u}{\partial\phi} - w,\quad 0\right]$$

$$= \frac{\epsilon}{r\sin\theta}\left[z\sin\phi\cos\theta + z'\sin\phi\sin\theta + y\sin\phi,\ -x\sin\phi - z\sin\phi,\ 0\right]$$

by Eqs. (45). Or

$$\text{curl } \underline{v} = \frac{\epsilon\sin\phi}{r\sin\theta}\left[t',\ -t,\ 0\right], \tag{58}$$

where $t = x + z\sin\phi = t_1/\epsilon$ as before. Thus curl $\underline{v}$ is of the same order as ϵ. Moreover, it can be shown from Eq. (37) that as $\theta \to \theta_s$, t' becomes infinite like $1/\sqrt{\theta - \theta_s}$. Thus the r-component of curl $\underline{v}$ becomes infinite as $\theta \to \theta_s$. Of course, this does not prove that the neglect of curl $\underline{v}$ cannot give good results; but it does suggest that the assumption of approximate irrotationality may be risky.

A rough approximate method, based on the assumptions of isentropy and irrotationality, but applicable to arbitrary slender bodies of revolution, has been developed by Tsien;[14] and a more refined approximate method, likewise assuming isentropy and irrotationality, has been given by Sauer.[15] Other simplified approximate treatments have been suggested by H. Lewy, and by Karush and Critchfield.[16] The latter suggest treating $\bar{\rho}$ and ξ as constant. From Table I, $\bar{\rho}$ and ξ do not vary much ($\bar{\rho}$ by 14 percent and ξ by 19 percent) in the case which has been computed; however, as in [K.C.], rough a priori estimates fail to justify taking even $\bar{\rho}$ = constant.

In all these cases the validity of the approximations could be decided only by comparing the actual numerical results. A comparison will be made with the theory of Tsien, which certainly leads to the simplest formulae, in Sec. 13.

There is one slight simplification which can safely be made in Eqs. (48) [or Eq. (52)] and (50), for the values of θ_s and U/a_1 of immediate ballistic interest. The results of Taylor and Maccoll show that the variation of $\bar{\rho}$ (as a function of θ) is not very large, being at most 20 percent in the range of immediate ballistic interest. Since $\bar{p}/\bar{\rho}^{\gamma}$ is constant, $\bar{p}/\bar{\rho}^{3/2}$ = constant$/\bar{\rho}^{0.095}$, since γ is taken to be 1.405, and will vary by at most 2 percent. One can therefore safely replace the quantity $\bar{p}/\bar{\rho}^{3/2}$, in the integral in the constant term of Eq. (48), by $\bar{p}_w/\bar{\rho}_w^{3/2}$. Now write

$$K = \frac{d}{\gamma - 1}\frac{\bar{p}_w}{\bar{\rho}_w}. \tag{59}$$

Then Eq. (48) [or Eq. (52)] may be replaced by

$$x'' + B_1 x' + B_2 x + C_3 cK = 0, \tag{60}$$

14/ Tsien, "Supersonic flow over an inclined body of revolution," Journal of Aeronautical Sciences (1938), pp. 480-483. See also v. Kármán and Moore, "Resistance of slender bodies moving with supersonic velocities, with special reference to projectiles," Trans. Amer. Soc. Mech. Eng. 1932 (vol. 56).

15/ R. Sauer, Luftfahrtforschung, vol. 19, pp. 148-152.

16/ [K.C.], p. 15.

where

$$C_3 = \sqrt{-\left(\frac{\bar{u}'}{c}\right)\left(\frac{\bar{\rho}}{\bar{\rho}_w}\right)\sin\theta} \cdot (1 + \lambda\bar{u}')\csc^2\theta \int_{\theta_w}^{\theta} \frac{d\theta}{\left(-\frac{\bar{u}'}{c}\right)^{3/2}\sqrt{\sin\theta}},$$

and the boundary conditions, Eqs. (50), become

$$\text{When } \theta = \theta_w, \left\{ \begin{array}{l} x = -K\tan\theta/(\bar{u}' + U\sin\theta), \\ x' = \frac{2K}{\gamma+1}(2U\sin\theta - \bar{u}')/(\bar{u}' + U\sin\theta)^2. \end{array} \right\} \quad (61)$$

The remaining boundary condition, Eq. (51), is left unchanged. One can then solve Eqs. (60) and (61) for x/Kc, and determine K from Eq. (51). However, the slight gain in simplicity thus achieved may perhaps not be worth the slight loss of accuracy.

12. The shock wave for conical-headed projectiles

The preceding theory is concerned with an idealized projectile consisting of an infinite cone moving with constant speed and yaw. Now we consider instead an actual projectile having a conical head. Its speed will be changing slowly, and its yaw (in the initial part of the trajectory) will change considerably, though this change is still slow when compared with the speed of the projectile if the projectile is stable. Despite the differences, the flows in the two cases can be expected to be very nearly the same in the neighborhood of the conical head, provided that they are locally supersonic. (Without this proviso, the effects of the finiteness of the cone may be propagated upstream, thus modifying the flow near the head.) And this expectation is strengthened by the good agreement with experiment of the Taylor-Maccoll nonyaw theory.

Thus, for an actual, fairly stable conical-headed projectile moving with a small yaw ϵ, and at a Mach number of rather more than 1,[17] the shock-wave surface should be a circular cone, having the same semiangle θ_w as if there were no yaw, but yawed at an angle δ, proportional to ϵ, given by Eq. (53).

17/ See Taylor and Maccoll (ref. 1) for details. For $\theta_s = 15°$, the Mach number should be greater than 1.2.

This provides an experimental check on the theory. By means of spark photography, "shadowgraphs" can be obtained which give in effect the projections of the conical head and the shock-wave cone on the plane of the photographic plate. Let χ be the angle between the plane of yaw (which is, of course, the same for the conical head and the shock-wave cone) and the plane of the photographic plate. Assume that the trajectory is parallel to the photographic plate (which is actually very nearly the case), and let θ_s^* and θ_w^* denote the "apparent" values of θ_s and θ_w (that is, θ_w^* denotes half the angle between the two lines which form the projection of the shock-wave cone on the photographic plate, and similarly for θ_s^*).

Similarly let ϵ^*, δ^*, denote the "apparent" yaws — the yaws of the projected images of the conical head and the shock-wave cone. A simple calculation now shows that, neglecting ϵ^2,

$$\left.\begin{aligned} \theta_s^* &= \theta_s, \\ \theta_w^* &= \theta_w, \\ \epsilon^* &= \epsilon \cos \chi, \\ \delta^* &= \delta \cos \chi. \end{aligned}\right\} \qquad (62)$$

Values of θ_s^*, θ_w^*, δ^*, and ϵ^* derived by measurements of such photographs have been obtained by the Ballistic Research Laboratory of the Aberdeen Proving Ground; and δ^* has been plotted against ϵ^* in Fig. 3. Since $\delta^*/\epsilon^* = \delta/\epsilon$, which can be calculated from Eq. (53), these values provide a test for the theory. The theoretical line on which the observed points should lie has been drawn in Fig. 3 for comparison.

In making this comparison, it should be observed that the theoretical values have all been computed for $\theta_s = 15^\circ$, $U/a_1 = 1.901$, whereas in the photographic data $\theta_s \doteqdot 15^\circ$ and U/a_1 varies between perhaps 1.9 and 2.1.

A second test for the theory is the constancy of θ_w; the observed values of θ_w^* should be constant. Here the comparison is harder to apply, partly because θ_w is rather sensitive to variations in Mach number U/a_1 in the relevant range, and partly because of optical complications. But it can be said that within experimental error θ_w^* is constant.

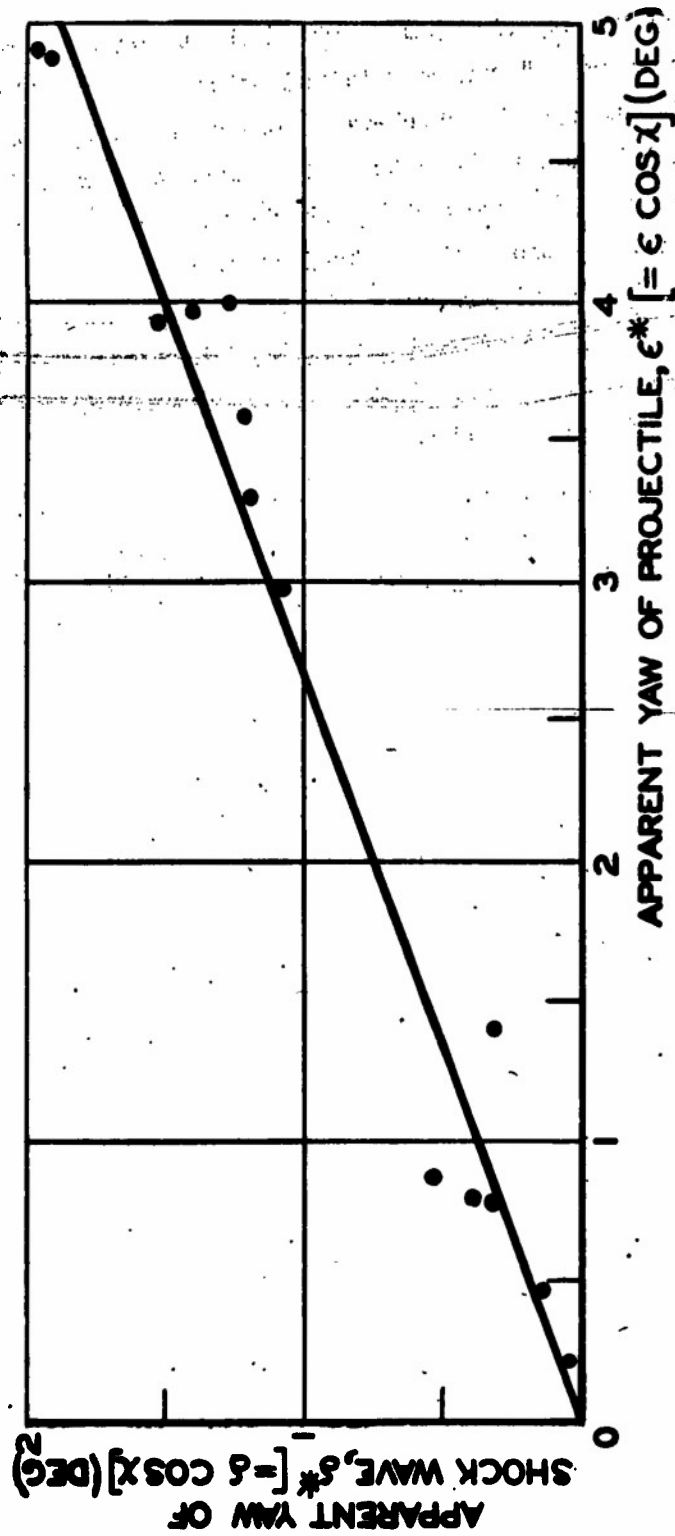

FIG. 3. OBSERVED AND THEORETICAL VALUES OF PROJECTILE YAW AND WAVE YAW.

On the whole, it is felt that the agreement of the theory with these observations is satisfactory. A more thorough comparison of theory and observation has been undertaken by I. E. Segal of the Ballistic Research Laboratory at Aberdeen Proving Ground, and may be the subject of a report from the Ballistic Research Laboratory.

13. The pressure on a conical-headed projectile

The forces on the conical head of the projectile are expressed in terms of η_s just as in [K.C.]; the only difference will be that here η_s is determined differently. As in [K.C.], the pressure at the point $(r, \theta_s + \epsilon \cos \phi, \phi)$ of the conical head is

$$p = \bar{p}_s + \bar{p}_s' \epsilon \cos \phi + \eta_s \epsilon \cos \phi,$$

from Eq. (45). Since $\bar{p}_s' = 0$ [from Eqs. (9) and (14)], this reduces to

$$p = \bar{p}_s + \eta_s \epsilon \cos \phi,$$

or, neglecting ϵ^2, to

$$p = \bar{p}_s + \eta_s \epsilon \cos \psi, \tag{63}$$

where ψ is the azimuthal angle measured from the plane of yaw around the axis of the cone. (See Fig. 2.)

Exactly as in [K.C.], the normal force N_H on the head, and the distance h_H from the vortex to the center of head pressure, follow readily by integration. We obtain

$$N_H = \frac{\pi}{4} D \ell \epsilon \eta_s \tag{64}$$

and

$$h_H = \frac{2}{3} \ell \sec^2 \theta_s, \tag{65}$$

where D is the diameter of the base of the cone, and ℓ is the perpendicular distance from the vortex to the base (so that $D/2\ell = \tan \theta_s$). (See Fig. 4).

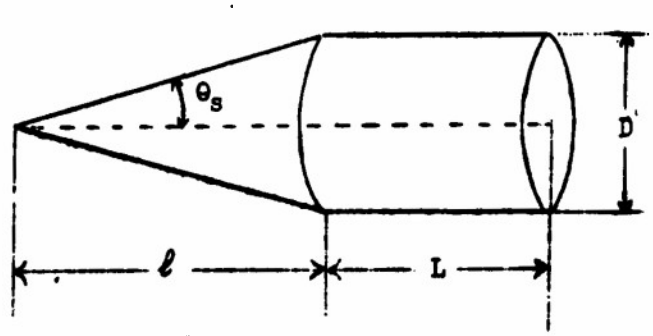

Fig. 4. Idealized conical-headed projectile.

Then the normal force coefficient contributed by the head of the projectile, say K_{NH}, is defined by

$$K_{NH} = N_H/\rho_1 D^2 U^2 \sin \epsilon, \tag{66}$$

so that

$$K_{NH} = \frac{\pi}{8} \eta_s \cot \theta_s/\rho_1 U^2$$

$$= -\frac{\pi}{8} \cot \theta_s \cdot \frac{\bar{\rho}_s}{\rho_1} \left| \bar{u}_s x_s + \frac{d}{27} (c^2 - \bar{u}_s^2) \right| / U^2 \tag{67}$$

on using Eqs. (54) and (12).

For completeness, it should be mentioned that the only remaining component of the resultant pressure on the head of the projectile is the component along the axis of the projectile, usually called the axial drag. This is readily found to have the value $\frac{1}{4}\pi \bar{p}_s D^2$ (see page 17 of the report by Karush and Critchfield cited in footnote 9), the same as its nonyaw value — as could have been predicted from symmetry, since ϵ^2 is here neglected.

It is interesting to compare Eqs. (65) and (67) with the results of Tsien's theory.[14/] This theory makes approximations which are crude in some ways (for instance, it involves disregarding the existence of the shock wave), but should be valid in the limit as $\theta_s \to 0$. In the present notation, Tsien obtains for the forces on the conical head,

$$h_H = 2\ell/3 \tag{68}$$

and

$$K_{NH} = \frac{\pi}{4} \frac{\zeta\sqrt{\zeta^2 - 1}}{\cosh^{-1}\zeta + \zeta\sqrt{\zeta^2 - 1}}, \tag{69}$$

where

$$\zeta = \frac{\cot \theta_s}{\sqrt{\left(\frac{U}{a_1}\right)^2 - 1}}.$$

Thus Eq. (68) agrees with Eq. (65) in the limit as $\theta_s \to 0$. The comparison of the present theory with Tsien's, for the case $\theta_s = 15^\circ$, $U/a_1 = 1.901$, is

shown in Table III. The agreement is probably close enough to confirm the usefulness of Tsien's theory as a convenient working approximation.

Table III. Comparison with Tsien's theory ($\theta_s = 15^\circ$, $U/a_1 = 1.901$).

Quantity	Present Theory	Tsien's Theory
h_H/ℓ	0.715	0.667
K_{NH}	0.677	0.600

Finally, the foregoing results can be used to give a rough qualitative estimate of the (total) normal force coefficient K_N, and of the distance h from the vertex of the cone to the center of (total) pressure. For this purpose, the projectile is taken to have a cylindrical body of length L. (See Fig. 4.) The pressure on the base of the projectile can be taken to be approximately zero. The perturbation in the pressure, $p - \bar{p}$, will be assumed, for a rough estimate, to vary linearly along the length of the cylindrical body. (The effect of the shock wave emanating from the driving band of the projectile will be disregarded.) The contribution to the normal force made by the cylindrical body of the projectile is then easily found to be $\frac{1}{4}\pi\epsilon\eta_s DL$, acting at a point at a distance $\ell + \frac{1}{3}L$ from the vertex. This would give, for the (total) normal force coefficient K_N,

$$K_N \doteq K_{NH}\left(1 + \frac{L}{\ell}\right); \tag{70}$$

and for the distance h from the vertex to the center of (total) pressure

$$h \doteq \tfrac{1}{3}(2\ell + L) + D^2/6(\ell + L). \tag{71}$$

If the over-all length of the projectile is greater than, say, 3 calibers -- that is, if $\ell + L > 3D$ -- which is usually the case in practice, formula (71) will not differ significantly from the simpler formula

$$h \doteq \tfrac{1}{3}(2\ell + L). \tag{72}$$

It should be possible to check these values, and to obtain more exact estimates for K_N and h, on the basis of wind-tunnel observations which are expected to be available eventually. Meanwhile the rough estimate for h has been compared with the values found experimentally for certain conical-headed

3.3-in. shells, given in a report by H. P. Hitchcock, "Stability factors of projectiles," Aberdeen Proving Ground Ballistic Research Laboratory Report 30 (revised 1940). This report lists nine such shell types, for three of which the experimental determination is uncertain. The comparison between formula (71) and the experimental values for the remaining six types is given in Table IV. The probable error is 0.15 caliber, which is not unreasonable

Table IV. Comparison of estimated and experimental values of h, for 3.3-in. conical-headed shells.

(h = distance from vertex of cone to center of pressure; all distances measured in calibers.)

Shell Type	ℓ	L	Experimental h	Estimated h	Discrepancy
111	3.26	2.49	2.68	3.03	+0.35
112	3.26	2.49	3.05	3.03	- .02
123	3.56	2.49	3.30	3.23	- .07
125	3.26	1.49	3.10	2.71	- .39
168	2.58	1.76	2.25	2.31	+ .06
169	2.94	1.76	2.72	2.59	- .13

in view of experimental errors and the roughness of the estimate leading to formula (71). It should be noted that all but the last two shell types had varying amounts of boattail, the effect of which is apparently considerable, though it has of course been disregarded in making the estimate.

14. Uniqueness

So far, it has been assumed that the values of θ_s and U/a_i are general enough for Eqs. (41), (42), and (43) to determine x_n/ϵ uniquely (and thus to prove $x_n = 0$ if $n \neq 1$). To analyze the matter a little further, we begin by rewriting these equations in a form which clarifies their dependence on n. We observe that, from Eq. (37), one can write

$$t_n = n d_n T(\theta), \tag{74}$$

where $T(\theta)$ is a known function of θ, independent of n. Thus, assuming temporarily $d_n \neq 0$ (since otherwise $x_n = 0$), and writing $q = x_n/d_n$, Eq. (41) can be written [compare Eqs. (48) and (52)]

$$q'' + B_1 q' + C_2 q = n^2(1 + \lambda\bar{u}')[q - T(\theta)]\csc^2\theta, \tag{75}$$

where B_1 and C_2 are likewise known functions of θ, independent of n. Equation (42) gives

$$\left.\begin{aligned} q_w &= -\frac{1}{\gamma - 1}\frac{\bar{p}_w}{\bar{\rho}_w}\frac{\tan\theta_w}{\bar{u}'_w + U\sin\theta_w}, \\ q'_w &= \frac{2}{\gamma^2 - 1}\frac{\bar{p}_w}{\bar{\rho}_w}\frac{2U\sin\theta_w - \bar{u}'_w}{(\bar{u}'_w + U\sin\theta_w)^2}. \end{aligned}\right\} \tag{76}$$

And Eq. (43) gives, if $n \neq 1$,

$$q'_s = 0. \tag{77}$$

The crucial requirement is now that for no value of n are Eqs. (75), (76), and (77) consistent. For if they are consistent for $n = 1$, then $x'_s = 0$ [from Eq. (77)], in contradiction to Eqs. (43); thus the present solution would be impossible. And if they are consistent for $n = 0$ or 2,3,..., the present solution would no longer be unique, as d_n (and similarly D_n) would be arbitrary. To determine the actual motion, it would be necessary to take the terms of order ϵ^2 (so far neglected) into account.

Consider the more general equation

$$q'' + B_1 q' + C_2 q = \nu(1 + \lambda\bar{u}')[q - T(\theta)]\csc^2\theta, \tag{78}$$

obtained from Eq. (75) by replacing n^2 by a parameter ν capable of taking all values. For each value of ν, Eqs. (78) and (76) determine q uniquely (θ_s and U/a_1 being supposed fixed). It is known that in general the function q thus determined will not satisfy Eq. (77); but that there may be a sequence $\nu_1, \nu_2, \ldots$ of values of ν, the "eigenvalues," for which Eq. (77) is a consequence of Eqs. (78) and (76).[18] The question can thus be reworded: can an eigenvalue

18/ Equations (78), (76), and (77) are not in the classical form for an eigenvalue problem, but can be reduced to substantially this form by replacing q by x_n/d_n and eliminating d_n by differentiating Eq. (78), and by combining Eqs. (76). This results in a homogenous third-order linear differential equation with homogeneous linear boundary conditions, which in general will have no solution other than zero.

of Eqs. (78), (76), and (77) be (for some particular values of θ_s and U/a_1) the square of an integer?

If 1 is an eigenvalue, the present solution is impossible; this would, of course, be detected automatically when the solution is calculated, as d_1 could not be determined.

If any of 0,4,9,..., say n^2, is an eigenvalue, then d_n can be taken arbitrarily; and so can D_n, since identical equations hold for the capital letters. Thus arbitrary multiples of the solution of Eqs. (41) and (42) for x_n, and of the analogous equations for X_n, can be introduced into the formula for u, so that [from Eqs. (18)] Eq. (45) must be replaced by

$$u = \bar{u} + x_1 \cos \phi + (x_n \cos n\phi + X_n \sin n\phi);$$

and similar considerations apply to v, w, and so forth. We shall describe this situation briefly by saying that an n-th harmonic, in arbitrary magnitude and phase, can be superposed onto the motion. As already remarked, this does not mean that the actual motion is indeterminate, for the terms comparable with ϵ^2 have been neglected. Analogy with known situations of this kind[19/] suggests that if the neglected terms are taken into account one of two things may happen: either the n-th harmonic cannot after all occur, or it may occur (to a determinate extent) when U/a_1 and θ_s are merely close to the values for which n^2 is an eigenvalue. It may be remarked that the possibility of an n-th harmonic arises equally for the nonyawing case; for the n-th harmonic would be independent of ϵ, and so would provide a consistent solution even when $\epsilon = 0$ (still neglecting, however, products of small quantities).

It would seem to be very laborious to compute the eigenvalues of Eqs. (78), ( ), and (76) in terms of U/a_1 and θ_s, and thence to determine theoretically for what values of U/a_1 and θ_s, if any, an n-th harmonic might occur. One could test whether the first few values of n^2 are eigenvalues, for each pair of values of U/a_1 and θ_s tabulated, using, for example, an

19/ See for example, Frank and von Mises, Differentialgleichungen der Physik (1930), vol. 1, pp. 466,467.

I.B.M. machine; but even this, though practicable, would hardly be worth the trouble.

We now outline the modifications which an n-th harmonic (if it occurs) would produce on the shape of the shock wave, and on the resultant pressure on the conical head of the projectile. It is assumed that the present solution is possible; thus $n \neq 1$.

(a) Effect on the shock wave. -- The n-th harmonic (if it occurs) would introduce nonzero terms $\alpha_n \cos n\phi + A_n \sin n\phi$ in the equation of the shock-wave surface, Eq. (46), thus superposing (if $n \neq 0$ -- that is, if $n \geq 2$) n undulations on its shape. With an n-th harmonic present, the flow need no longer be symmetric about the plane of yaw. The case $n = 0$ is especially interesting: if a 0-th harmonic is present, α_0 becomes arbitrary; thus the shock-wave cone, though remaining circular, might have semiangle different from θ_w.

The yaw-ratio δ/ϵ is unaltered by the occurrence of n-th harmonics; but its experimental determination would be complicated by the fact that such a harmonic might obscure the true "mean position" of the shock-wave cone, from which δ must now be measured.

A further complication is introduced by the possibility that the n-th harmonic might, if present, occur in slowly varying magnitude and phase. (Rapid variation is excluded from the present setup, as the motion is assumed approximately steady.) Thus the "apparent" value θ_w^* of the shock-wave angle, as shown by spark photographs, might oscillate. It is interesting that multiple spark photographs (in which several "shadowgraph" photographs of a moving projectile are taken in very rapid succession) have shown that this phenomenon may occasionally occur in practice, though of course it does not follow that a varying n-th harmonic is the actual explanation. (Oscillations in θ_w^* may well be produced by variations in the yaw and orientation of the projectile, and in its distance from the photographic plate.) The occurrence of a harmonic could be checked more reliably by taking a number of spark photographs simultaneously, from several angles.

(b) Effect on the pressure. -- The effect on the pressure of an n-th harmonic would be to add on terms $\eta_n \cos n\phi + H_n \sin n\phi$ (where $n \neq 1$) to the

expression for p [Eq. (45)]. However, the resultant normal force on the conical head would be unaffected; this follows easily by integrating the appropriate components of the extra terms over the conical surface and observing that

$$\int_0^{2\pi} \cos n\psi \cos\psi \, d\psi = 0 = \int_0^{2\pi} \sin n\psi \cos\psi \, d\psi.$$

Similarly, the center of pressure would be unaltered. The same is true of the drag, if $n \neq 0$; this follows from the facts that

$$\int_0^{2\pi} \cos n\psi d\psi = 0 = \int_0^{2\pi} \sin n\psi d\psi.$$

However, if $n = 0$ the nonyaw pressure $\bar{p}_s$ would in effect be replaced by $\bar{p}_s + (\eta_0)_s$, resulting in a small change in the drag.

To sum up: it seems to be difficult to determine mathematically whether the equations of Sec. 8 can actually fail to determine x_n uniquely for some combinations of U/a_1 and θ_s. If they fail to determine x_1, the present solution becomes impossible. But if x_1 is determined (which is automatically checked when the solution is computed according to Sec. 9), the resultant normal force on the cone, and the center of pressure, are given uniquely by the equations in Sec. 13. If x_n is indeterminate ($n \neq 1$), an n-th harmonic in arbitrary magnitude and phase may be superposed on the motion, as far as the present "first-order perturbation theory" (which neglects products of small quantities) is concerned; however, the actual determination of the motion would depend on the consideration of the "second-order" terms. The occurrence of such a harmonic would affect the shape of the shock wave, and so would be detectable (in principle, at least) by simultaneous spark photographs; but it would not influence the resultant forces on the conical-headed projectile, except possibly for a small change in the drag if $n = 0$.

CLASSIFICATION CHANGED TO UNCLASSIFIED

BY AUTHORITY OF R-U

Date 2 JULY 1957 Signed Richard E. Reedy
OFFICE SECURITY ADVISOR

A.T.I 24617

Reproduced by

DOCUMENT SERVICE CENTER

ARMED SERVICES TECHNICAL INFORMATION AGENCY

KNOTT BUILDING, DAYTON, 2, OHIO

"NOTICE: When Government or other drawings, specifications or other data are used for any purpose other than in connection with a definitely related Government procurement operation, the U.S. Government thereby incurs no responsibility, nor any obligation whatsoever; and the fact that the Government may have formulated, furnished, or in any way supplied the said drawings, specifications or other data is not to be regarded by implication or otherwise as in any manner licensing the holder or any other person or corporation, or conveying any rights or permission to manufacture, use or sell any patented invention that may in any way be related thereto."

UNCLASSIFIED

RE[redacted]ED

OVER

TITLE: The Aerodynamics of a Slightly Yawing Supersonic Cone

AUTHOR(S): Stone, A. H.

ORIGINATING AGENCY: Carnegie Institution of Washington, Washington, D. C.

PUBLISHED BY: Office of Scientific Research and Development, Div. 1, Washington, D. C.

ATI- 24617 (25)

REVISION (None)

ORIG. AGENCY NO. (None)

PUBLISHING AGENCY NO. OSRD 6306

DATE	DOC. CLASS.	COUNTRY	LANGUAGE	PAGES	ILLUSTRATIONS
July '45	~~Restr.~~	U.S.	Eng.	44	tables, diagrs, graph

ABSTRACT: (23) + Projectiles; Supersonic flow; Yaw

The Taylor-Maccoll theory, dealing with the aerodynamic problem of the flow around a cone moving without yaw at supersonic speeds through air, is extended. The theory is applied to the case in which the cone is moving with a small yaw. The problem is reduced to a form suitable for computation, and the theory is checked by comparing its predictions about the shape and yaw of the shock wave with experiment. The head contribution to the total normal-force coefficient and center of pressure of a conical headed projectile in flight is determined.

DISTRIBUTION: Copies of this report obtainable from Air Documents Division; Attn: MCIDXD

DIVISION: Ornance and Armament ~~(22)~~ 22

SECTION: Ballistics ~~(12)~~ (416)

ATI SHEET NO.: R-22-12-18

SUBJECT HEADINGS: Projectiles, Supersonic - Yaw (75427.82); Projectiles - Aerodynamics (75415)

UNCLASSIFIED per Authority of OSRD List #39
Dated 20 Jan - 21 Feb 1947.