1263

NATIONAL ADVISORY COMMITTEE FOR AERONAUTICS

TECH LIBRARY KAFB, NM
0066303

TECHNICAL NOTE

No. 1263

STRESSES IN AND GENERAL INSTABILITY OF MONOCOQUE CYLINDERS WITH CUTOUTS

III - CALCULATION OF THE BUCKLING LOAD OF CYLINDERS WITH SYMMETRIC CUTOUT SUBJECTED TO PURE BENDING

By N. J. Hoff, Bruno A. Boley, and Bertram Klein

Polytechnic Institute of Brooklyn

Washington
May 1947

AFMDC
TECHNICAL LIBRARY
AFL 2811

TECH LIBRARY KAFB, NM
0069303

NATIONAL ADVISORY COMMITTEE FOR AERONAUTICS

TECHNICAL NOTE NO. 1263

STRESSES IN AND GENERAL INSTABILITY OF MONOCOQUE CYLINDERS WITH CUTOUTS

III – CALCULATION OF THE BUCKLING LOAD OF CYLINDERS WITH SYMMETRIC CUTOUT SUBJECTED TO PURE BENDING

By N. J. Hoff, Bruno A. Boley, and Bertram Klein

SUMMARY

A strain-energy theory is developed for the calculation of the buckling load in pure bending of reinforced monocoque cylinders which have a symmetric cutout on the compression side and buckle according to the general instability pattern. Computations are carried out for the cylinders tested earlier at the Polytechnic Institute of Brooklyn Aeronautical Laboratories. The theoretical curve is similar in shape to that obtained experimentally, but the theoretical values are consistently too high. The deviation is 39.3 percent in the worst case.

INTRODUCTION

General instability is defined as the simultaneous buckling of the longitudinal and circumferential reinforcing elements of a monocoque cylinder together with the sheet attached to them. The general instability of reinforced circular monocoque cylinders subjected to pure bending has been investigated in some detail at Polytechnic Institute of Brooklyn Aeronautical Laboratories and Guggenheim Aeronautical Laboratory, California Institute of Technology, under the sponsorship of the National Advisory Committee for Aeronautics (references 1 to 8). This theoretical and experimental work dealt with complete cylinders not having cutouts. It can be expected that a cutout decreases the buckling load in general instability since part of the elastic support is lost when a portion of the structure is removed. This conjecture was verified in recent experiments carried out at Polytechnic Institute of Brooklyn Aeronautical Laboratories which dealt with the general instability of and the stress distribution in monocoque cylinders with a symmetric cutout. Reference 9 contains a report on these experiments. A theoretical study of the stress distribution in the cylinders is presented in reference 10.

Reference 11 deals with an experimental investigation of cylinders having a side cutout.

In the present report the buckling load of reinforced monocoque cylinders with a symmetric cutout on the compression side is calculated by strain-energy methods. The deflected shape at buckling is represented by a full sine wave extending over the length of the cutout in the axial direction and by the first seven terms of a Fourier expansion in the circumferential direction. The circumferential coordinate is measured from the edge of the cutout and the length of the interval in which the Fourier series is defined is considered as one of the parameters of the problem. The boundary conditions at the end of the interval determine four of the seven coefficients of the series while one of them is indeterminate as in all buckling problems. The remaining two coefficients, as well as the wave-length parameter, are calculated from the requirement that the buckling load be a minimum.

The following strain-energy quantities are considered: radial and tangential bending as well as torsion of the stringers; bending of the rings in their plane; and shear in the sheet. The extensional strain energy stored in the sheet is taken into account by adding an effective width of sheet to the stringers and the rings. In the calculation of the work of the external forces a linear force distribution is assumed in preference to a linear strain distribution in bending. This assumption is in better agreement with the experiments described in reference 9.

The buckling load is calculated from the requirement that the strain energy corresponding to the transition from the unbuckled into the buckled shape be equal to the work done by the applied loads. The minimum value of the buckling load is found by assuming the circumferential wave length to be equal to the length of some integral number of stringer fields, calculating the values of the two Fourier coefficients that minimize the buckling load in the case of the assumed wave length, determining the buckling load, and comparing it with values obtained on the assumption of other different wave lengths. The final results of the numerical work are presented in the form of buckling loads calculated for three different circumferential wave lengths for each of the three sizes of the cutouts tested. In each case these buckling loads define a minimum. All the calculations were carried out for one-half the cylinder because of the symmetry of both structure and loading.

For a substantial share in the numerical work the authors are indebted to Bernard Levine. The investigation was conducted under the sponsorship and with the financial aid of the National Advisory Committee for Aeronautics.

SYMBOLS

a, a_0, a_1, a_2, a_3	Fourier coefficients
A	cross-sectional area of a stringer plus its effective width
b, b_1, b_2, b_3	Fourier coefficients
C	geometric factor in torsional rigidity GC
d	width of panel measured along the circumference
E	Young's modulus
G	shear modulus
G_o	shear modulus of sheet covering at zero compressive load
G_{eff}	effective shear modulus
i	index indicating position along circumference
I	moment of inertia
I_r	moment of inertia of ring section and its effective width of sheet for bending in its own plane
I_{str_r}	moment of inertia of stringer section and its effective width of sheet for bending in the radial direction (about a tangential axis)
I_{str_t}	moment of inertia of stringer section and its effective width of sheet for bending in the tangential direction (about a radial axis)
j	index indicating position along axial direction
k_1, k_2, k_3, k	trigonometric functions of φ, x, n, a, b
L	length of cutout
L_1	distance between adjacent rings
m	number of rings involved in the failure
M	applied bending moment; function of n, a, b appearing in the strain energy of bending in the rings

M_{cr} applied bending moment at general instability

n parameter defining the length of the general instability in the circumferential direction

$N = 0.0275\left[(2\pi r/d) + 1\right]$

p_1, p_2 polynomial functions of a and b

P_{cr} force carried by one of the stringers at the edge of the cutout at general instability

P_i force carried by the ith stringer

Q function of x appearing in the shear strain energy

r radius of cylinder

R function of φ, n, a, b appearing in the shear strain energy

s number of stringers involved in one-half the general-instability bulge

S total number of stringers in the cylinder

t thickness of sheet covering

U strain energy

U_r strain energy stored in the rings because of bending (of the rings) in their own plane

U_{sh} strain energy stored in the sheet covering because of shear

U_{str_r} strain energy stored in the stringers because of bending about a tangential axis

U_{str_t} strain energy stored in the stringers because of bending about a radial axis

U_t strain energy stored in the stringers because of torsion

$2w$ effective width of sheet

w_r radial displacement of a point on a ring or a stringer

w_t	tangential displacement of a point on a ring or a stringer
W	work done by the applied forces
x	coordinate measuring distance along the axis of the cylinder from the edge of the cutout
2α	cutout angle
α_r, α_t	coefficients used in the calculation of the shear strain in a panel due to displacements of its corners
γ	shear strain
δ	distance of neutral axis from horizontal diameter of cylinder
ϵ	normal strain in a stringer
ϵ_{cr}	buckling strain of a panel of sheet covering
φ	angular coordinate with origin at the edge of the cutout

THE DEFLECTED SHAPE

In the experiments described in reference 9 it was observed that at buckling the wave length in the axial direction was almost exactly equal to the length of the cutout. For this reason it is assumed in the theory that the rings bordering the cutout are rigid in their planes. The cylinder is then thought of as being cut through these rings and the external moments are applied in the sections. With the notation of figure 1 the distorted shape of the stringers is assumed to be

$$w_r = a_o(k_1/2)[1 - \cos\ (2\pi x/L)\ ] = a_o k_1 \sin^2\ (\pi x/L) \qquad (1)$$

where w_r is the radial deflection, and k_1 a proportionality factor dependent upon the angle φ.

The circumferential wave pattern could not be determined with sufficient accuracy in the tests. It is assumed, therefore, to be represented by the following trigonometric expression:

$$w_r = k_2[(a_o + a_1 \cos n\varphi + a_2 \cos 2n\varphi + a_3 \cos 3n\varphi + b_1 \sin n\varphi + b_2 \sin 2n\varphi + b_3 \sin 3n\varphi)] \qquad (2)$$

where k_2 is a proportionality factor dependent upon x. (Because of equation (1) k_2 is $\sin^2(\pi x/L)$.) Equation (2) is valid, provided

$$0 \leq \varphi \leq \pi/n \tag{2a}$$

When φ is greater than π/n, the deflections are assumed to be zero. Consequently n is the parameter defining the length of the bulge.

Since in thin rings extensional deformations involve much more strain energy than do bending deformations, the deflections of the rings are assumed to be inextensional. This assumption determines the tangential displacements w_t when the radial displacements are given. The connection between the two was developed in reference 3 and stated in equation (4a) of that reference:

$$w_r = -\partial w_t/\partial\varphi \tag{3}$$

It follows from equations (2) and (3) that w_t may be taken as

$$w_t = k_2[-a_0\varphi - (a_1/n)\sin n\varphi - (a_2/2n)\sin 2n\varphi - (a_3/3n)\sin 3n\varphi$$
$$+ (b_1/n)\cos n\varphi + (b_2/2n)\cos 2n\varphi + (b_3/3n)\cos 3n\varphi] \tag{4}$$

provided

$$0 \leq \varphi \leq \pi/n$$

Because of the symmetry of both structure and loading these expressions are equally applicable when the angle φ is measured from either one of the edge stringers. An obvious limitation of the formulas is

$$\alpha + (\pi/n) \leq \pi \tag{5}$$

If it is required that there be a smooth transition between the bulge and the nondistorted part of the cylinder at $\varphi = (\pi/n)$, then the following conditions must be satisfied:

(1) The tangential displacement must vanish:

$$w_t = 0 \quad \text{when} \quad \varphi = \pi/n \tag{6a}$$

(2) The radial displacement must vanish:

$$w_r = 0 \quad \text{when} \quad \varphi = \pi/n \tag{6b}$$

(3) There must be no sudden change in the direction of the tangent:

$$\partial w_r/\partial\varphi = 0 \quad \text{when} \quad \varphi = \pi/n \tag{6c}$$

(4) There must be no sudden change in the curvature:

$$\partial^2 w_r/\partial\varphi^2 = 0 \quad \text{when} \quad \varphi = \pi/n \tag{6d}$$

The mathematical formulation of these requirements was discussed in detail on pages 10 and 11 of reference 3. The four conditions contained in equations (6a) to (6d) establish four relationships between the Fourier coefficients in equation (4) and make it possible to express any four coefficients by means of the remaining three. If a_o, a_1, and b_1 are retained as the basic parameters, the following four equations are obtained:

$$\left.\begin{aligned} a_2 &= (8/5)a_1 - (9/5)a_o \\ a_3 &= (3/5)a_1 - (4/5)a_o \\ b_2 &= (16/5)b_1 + (18/5)\pi a_o \\ b_3 &= (9/5)b_1 + (12/5)\pi a_o \end{aligned}\right\} \tag{7}$$

With the notation

$$(a_1/a_o) = a \quad \text{and} \quad (b_1/a_o) = b \tag{8}$$

and after substitution of the expressions contained in equations (7), a combination of equations (1) and (2) gives for the radial displacement

$$w_r = a_o k_1 \sin^2 (\pi x/L) \tag{9}$$

where

$$\begin{aligned} k_1 = [&1 + a \cos n\varphi + (1.6a - 1.8) \cos 2n\varphi \\ &+ (0.6a - 0.8) \cos 3n\varphi + b \sin n\varphi + (3.2b + 3.6\pi) \sin 2n\varphi \\ &+ (1.8b + 2.4\pi) \sin 3n\varphi] \end{aligned} \tag{9a}$$

Similarly the tangential displacement becomes

$$w_t = a_o k_3 \sin^2 (\pi x/L) \tag{10}$$

$$\begin{aligned} k_3 = (1/n)[&-n\varphi - a \sin n\varphi - (1/2)(1.6a - 1.8) \sin 2n\varphi \\ &- (1/3)(0.6a - 0.8) \sin 3n\varphi + b \cos n\varphi + (1/2)(3.2b + 3.6\pi) \cos 2n\varphi \\ &+ (1/3)(1.8b + 2.4\pi) \cos 3n\varphi] \end{aligned} \tag{10a}$$

Equations (9) and (10) are valid, provided

$$0 \leq \varphi \leq \pi/n \tag{10b}$$

When φ is greater than π/n the deflections are assumed to vanish. A typical example of the deflections at buckling in the plane of the rings is shown in figure 2.

CALCULATION OF THE STRAIN ENERGY

Strain Energy Stored in the Rings

The strain energy stored in half of any ring is

$$U = (1/2)\left[(EI)_r/r^3\right]\int_0^{\pi/n}\left[w_r + (\partial^2 w_r/\partial\varphi^2)\right]^2 d\varphi \tag{11}$$

in accordance with equations (c) on page 11 and (7) on page 12 of reference 3. Substitution of the value of w_r from equation (9) and summation over all the rings contained in the axial wave length yield

$$\begin{aligned} U_r = (1/2)\,(a_o^2/r^3)\sum_{j=1}^{m}(EI)_r \sin^4\left(\pi x_j/L\right)\int_0^{\pi/n}[&1 + a(1-n^2)\cos n\varphi \\ &+ (1.6a - 1.8)(1 - 4n^2)\cos 2n\varphi + (0.6a - 0.8)(1 - 9n^2)\cos 3n\varphi \\ &+ b(1 - n^2)\sin n\varphi + (3.2b + 3.6\pi)(1 - 4n^2)\sin 2n\varphi \\ &+ (1.8b + 2.4\pi)(1 - 9n^2)\sin 3n\varphi]^2\, d\varphi \end{aligned} \tag{12}$$

where U_r is the strain energy stored in all the rings in one-half of the cylinder. The subscript j refers to the individual rings the total number of which is m within the length of the cutout. If the integration is carried out and the value of the definite integral is denoted by M it is possible to write

$$
\begin{aligned}
nM = {} & [\pi + 10.053096(1 - 9n^2) + 206.01005(1 - 4n^2)^2 + 90.303387(1 - 9n^2)^2 \\
& - 18.095573\ (1 - 4n^2)\ (1 - 9n^2)] \\
& + a\ [-9.0477868(1 - 4n^2)^2 - 1.5079645(1 - 9n^2)^2 \\
& + 30.159289(1 - n^2)\ (1 - 4n^2) + 18.095573\ (1 - 4n^2)\ (1 - 9n^2)] \\
& + b\ [4(1 - n^2) + 2.4(1 - 9n^2) + 113.69784\ (1 - 4n^2)^2 + 42.636690(1 - 9n^2)^2 \\
& + 2.4(1 - n^2)(1 - 4n^2) - 3.68(1 - 4n^2)(1 - 9n^2)] \\
& + a^2\ [(\pi/2)(1 - n^2)^2 + 4.0212386(1 - 4n^2)^2 + 0.5654867(1 - 9n^2)^2] \\
& + b^2\ [(\pi/2)(1 - n^2)^2 + 16.084954(1 - 4n^2)^2 + 5.08938(1 - 9n^2)^2] \\
& + ab\ [6.4(1 - n^2)(1 - 4n^2) + 3.84(1 - 4n^2)(1 - 9n^2)]
\end{aligned}
\tag{13}
$$

The strain energy is therefore

$$U_r = (1/2)\ (a_o{}^2/r^3)M \sum_{j=1}^{m} (EI)_r \sin^4 (\pi x_j/L) \tag{14}$$

When the bending rigidity $(EI)_r$ is the same for all the rings, the summation yields a result in closed form as was shown in the appendix of reference 12:

$$\sum_{j=1}^{m} \sin^4 (\pi x_j/L) = (3/8)(m + 1) \tag{15}$$

provided

$$m > 1 \tag{15a}$$

When $m = 1$ the value of the summation is 1. The strain energy of bending stored in all the rings is consequently

$$U_r = (3/16)(a_o{}^2/r^3)(EI)_r(m + 1)M \tag{16}$$

In equation (16) the value of M depends upon n, a, and b. Values of M computed for $n = 4, 2.666. . ., 2, 1.6, 1.333. . .$ corresponding to $s = 2, 3, 4, 5, 6$, respectively, are listed in table I. These values of n correspond to buckling patterns in which the bulge ends at one of the 16 stringers contained in the specimens tested.

Strain Energy Stored in the Stringers

The strain energy stored in the stringers because of bending in the radial direction is

$$U_{str_r} = \sum (1/2)(EI)_{str_r} \int_0^L (\partial^2 w_r/\partial x^2)^2 \, dx \tag{17}$$

where the summation is extended over all the stringers contained in one-half the cylinder. Substitution of the value of w_r from equation (9) into equation (17) and integration yield

$$\begin{aligned} U_{str_r} &= \sum (1/2)(EI)_{str_r} \int_0^L a_o \, k_1^2 (2\pi^2/L^2)^2 \cos^2 (2\pi x/L) \, dx \\ &= a_o^2 \, (\pi^4/L^3) \sum k_1^2 \, (EI)_{str_r} \end{aligned} \tag{18}$$

The moment of inertia I_{str_r} of the stringer varies around the circumference of the cylinder because the effective width of the sheet to be added to the stringer section changes. The values of I_{str_r} were determined, for each of the cutout sizes investigated, according to the principles stated in reference 1. Similarly k_1^2 was computed for each stringer.

The strain energy stored in the stringers because of bending in the tangential direction is

$$U_{str_t} = \sum (1/2)(EI)_{str_t} \int_0^L (\partial^2 w_t/\partial x^2)^2 \, dx \tag{19}$$

where the summation is extended over all the stringers contained in one-half the cylinder. With the aid of equation (10) the strain energy can be given as

$$U_{str_t} = a_o^2 (\pi^4/L^3) \sum k_3^2 (EI)_{str_t} \tag{20}$$

Since both k_3 and I_{str_t} vary from stringer to stringer the summation indicated in equation (20) was evaluated numerically for each cutout size investigated.

The strain energy stored in the stringer because of torsion is

$$U_t = \sum (1/2)GC \int_0^L (1/r)^2 \left[(\partial^2 w_r)/(\partial x \, \partial \varphi) \right]^2 dx \tag{21}$$

In this equation $(1/r)(\partial^2 w_r)/(\partial x\ \partial\varphi)$ is the unit angle of twist of the stringer, and the summation must be carried out over all the stringers contained in one-half the cylinder. In the expression for the Saint-Venant torsional rigidity,

$$C = 0.14a^4 \tag{21a}$$

since the test specimens were provided with square section stringers of edge length a. Differentiation gives

$$(\partial^2 w_r)/(\partial x\ \partial\varphi) = a_o k_4 (\pi/L) \sin (2\pi x/L) \tag{22}$$

where

$$k_4 = n\big[- a \sin n\varphi - (3.2a - 3.6) \sin 2n\varphi - (1.8a - 2.4) \sin 3n\varphi + b \cos n\varphi + (6.4b + 7.2\pi) \cos 2n\varphi + (5.4b + 7.2\pi) \cos 3n\varphi\big] \tag{22a}$$

Hence the strain energy of torsion is

$$U_t = a_o^2(\pi^2/4) \quad \big[(GC)/(Lr^2)\big] \sum k_4^2 \tag{23}$$

where the summation is extended to include all the stringers contained in one-half the cylinder. The term GC is before the summation sign in equation (23) since according to Saint Venant the variation of the torsional rigidity, caused by the different amounts of effective width of sheet, is so small that it was considered permissible to assume GC a constant. Again a numerical evaluation of the summation was carried out when the strain energy was calculated.

Strain Energy of Shear Stored in the Sheet

The shear strain energy in a panel is taken as being proportional to the average effective shear modulus G_{eff} multiplied by the square of the average shear strain γ in the panel. The latter is calculated from the displacements of the four corners of the panel as was done in reference 3. Then the total strain energy of shear stored in the sheet is

$$U_{sh} = (1/2)\sum \gamma^2\ G_{eff}\ L_1\ td \tag{24}$$

where the summation extends over all the panels contained in one-half the cylinder.

The value of the effective shear modulus depends upon the magnitude of the compressive strain in the panel, as was shown in reference 13. The empirical formula recommended there for the computation of G_{eff} is

$$G_{eff}/G_o = (1 - N)e^{-N(\epsilon/\epsilon_{cr})} + N \tag{25}$$

where

$$N = 0.0275[2\pi(r/d) + 1] \tag{25a}$$

and G_o is the shear modulus in the absence of compressive stresses, ϵ the compressive strain prevailing in the panel, and ϵ_{cr} the compressive strain when the panel of sheet buckles.

Since the displacements in the axial direction are small and of the second order, the displacements of the corners of the panel need be investigated only in the plane of the rings. The effect of rotation of the ring upon the shear was neglected. Formulas for the calculation of the shear strain from the displacements of the corners were developed in reference 10 and were presented in figure 23 of that reference. With the notation and sign convention of figure 3 of the present report the shear strain is

$$\begin{aligned}\gamma = {} & (\alpha_r/L_1)\left[w_{r_{i,j}} - w_{r_{i+1,j}} - w_{r_{i,j+1}} + w_{r_{i+1,j+1}}\right] \\ & - (\alpha_t/L_1)\left[w_{t_{i,j}} + w_{t_{i+1,j}} - w_{t_{i,j+1}} - w_{t_{i+1,j+1}}\right]\end{aligned} \tag{26}$$

where the first subscript refers to the circumferential, and the second to the axial location of the corner of the panel. In reference 14 the values of the numerical factors α_r and α_t were determined. Simplified formulas were given on page 27 of reference 14 which represent these factors very accurately when the angle d/r is of the order of magnitude found in monocoque fuselages. The formulas can be written in the following slightly changed form:

$$\begin{aligned}\alpha_r &= (1/10)(d/r) = (1/10)(2\pi/S) \\ \alpha_t &= -1/2\end{aligned} \tag{27}$$

Substitutions yield

$$U_{sh} = (1/2)(td/L_1)G_o \sum_{j=0}^{m} Q_j \sum_{i=0}^{s-1} (G_{eff}/G_o)_i R_i \tag{28}$$

where Q is a function of x only, and R a function of φ only. The summation $\sum Q$ gives a result in closed form:

$$\sum_{j=0}^{m} Q_j = \sum_{j=0}^{m} \left\{\sin^2 [(\pi j)/(m + 1)] - \sin^2 [\pi (j + 1)/m + 1)]\right\}^2$$

$$= (1/4)(m + 1) \left\{1 - \cos [(2\pi)/(m + 1)]\right\} \tag{29}$$

provided

$$m > 1 \tag{29a}$$

When $m = 1$,

$$\sum Q = 2 \tag{29b}$$

The results of the summation were listed in equations (24) of reference 3.

The meaning of the symbol R is

$$R = a_0^2 [\alpha_r(k_{1,i} - k_{1,i+1}) - \alpha_t(k_{3,i} + k_{3,i+1})]^2 \tag{30}$$

The values of $k_{1,i}$, $k_{1,i+1}$, $k_{3,i}$, and $k_{3,i+1}$ are obtained from those of k_1 and k_3 (equations (9a) and (10a)), respectively, by replacing the angle φ by $2\pi i/S$ or $2\pi(i + 1)/S$:

$$k_{1,i} = [1 + a \cos (2\pi ni/S) + (1.6a - 1.8) \cos (4\pi ni/S)$$
$$+ (0.6a - 0.8) \cos (6\pi ni/S) + b \sin (2\pi ni/S)$$
$$+ (3.2b + 3.6\pi) \sin (4\pi ni/S) + (1.8b + 2.4\pi) \sin (6\pi ni/S)] \tag{30a}$$

$$k_{3,i} = (1/n)[-(2\pi ni/S) - a \sin (2\pi ni/S) - (1/2)(1.6a - 1.8) \sin (4\pi ni/S)$$
$$- (1/3)(0.6a - 0.8) \sin (6\pi ni/S) + b \cos (2\pi ni/S)$$
$$+ (1/2)(3.2b + 3.6\pi) \cos (4\pi ni/S) + (1/3)(1.8b + 2.4\pi) \cos (6\pi ni/S)] \tag{30b}$$

In the calculations the R quantities were summed up numerically.

WORK DONE BY THE EXTERNAL FORCES

It was observed in the experiments described in reference 9 that the stress distribution was not linear in the cutout portion of the cylinder, although the deviations from linearity were not large as a rule. A good approximation to the experimental curves was obtained by assuming a linear force distribution which is not equivalent to a linear stress distribution because of the varying amount of effective sheet added to the stringer section. Strain-distribution curves calculated on the assumption of a linear force distribution are compared in figure 4 with strains measured in the experiments. The expression used for the calculation of the force acting upon the ith stringer is

$$P_i = P_{cr} \left\{\cos\left[\alpha + (2\pi i/S)\right] + (\delta/r)\right\} \Big/ \left[\cos\alpha + (\delta/r)\right] \tag{31}$$

where P_{cr} is the compressive force acting upon the stringer at the edge of the cutout, and δ is the distance of the neutral axis from the horizontal diameter of the cylinder.

The work done by the external forces acting upon the stringers is equal to the summation of the forces times the displacement of the points of application of the forces. The displacements of these points are equal to the shortening of the distance between the end points of the stringers during buckling. Consequently the work is

$$W = (1/2) \sum P_i \int_0^L \left[(\partial w_r/\partial x)^2 + (\partial w_t/\partial x)^2\right] dx \tag{32}$$

where the summation has to be extended over all the stringers contained in one-half the cylinder. Substitutions and integration yield

$$\begin{aligned} W &= (1/2)a_o^2 \sum P_i(\pi/L)^2 \left(k_1^2 + k_3^2\right) \int_0^L \sin^2 (2\pi x/L)\, dx \\ &= (1/4)(\pi^2/L)P_{cr}\, a_o^2 \sum (P_i/P_{cr})\left(k_1^2 + k_3^2\right) \end{aligned} \tag{33}$$

The summation in the right-hand member of equation (33) was carried out numerically.

CALCULATION OF THE BUCKLING LOAD

The buckling condition is

$$U_r + U_{str_r} + U_{str_t} + U_t + U_{sh} = W \tag{34}$$

where the values of the quantities must be taken from equations (16), (18), (20), (23), (28), and (33). Equation (34) was solved for P_{cr}, contained in W, by the use of the following procedure:

First, a value of n was assumed corresponding to a circumferential wave length extending over an integral number of stringer fields. With this value M, k_1, k_3, and k_4 were computed. Next, P_{cr} was assumed. This assumption permitted the calculation of the effective width of sheet and consequently the moments of inertia of the stringers as well as G_{eff}/G_o. The summations were then carried out. Substitution of the results in equation (34) yields a polynomial of the second degree in a and b in the left-hand member, and another polynomial of the second degree in the right-hand member, the latter multiplied by P_{cr}. Solution for P_{cr} gives a fraction which can be represented symbolically as

$$P_{cr} = \frac{p_1(a,b)}{p_2(a,b)} \tag{35}$$

where p_1 and p_2 are second-degree polynomials in a and b. The values of a and b, the parameters defining the buckled shape, must be chosen so as to make P_{cr} a minimum. It is known from the calculus that P_{cr} can be minimized by setting

$$P_{cr} = \frac{p_1(a,b)}{p_2(a,b)} = \frac{\partial p_1/\partial a}{\partial p_2/\partial a} = \frac{\partial p_1/\partial b}{\partial p_2/\partial b} \tag{36}$$

The partial differential coefficients of the polynomials p_1 and p_2 are linear functions of a and b. Equations (36) represent three connections between P_{cr}, a, and b. They were solved by a rapidly converging trial-and-error method. First, a and b were calculated from the linear equations with the aid of an assumed value of P_{cr}. The values of a and b so determined were then substituted into the quadratic expression for P_{cr}. The procedure was repeated with the aid of new assumptions for P_{cr} until the value obtained from the quadratic expression was close enough to the assumed value.

When the value of P_{cr} obtained in these calculations differed materially from that assumed at the outset, the moments of inertia and the effective shear modulus had to be calculated again and the entire procedure repeated. All the calculations were carried out with different values of n. The buckling loads corresponding to these different values were compared, and the smallest one was considered as the true buckling load. Details of the procedure may be seen from the numerical example given in the appendix.

COMPARISON OF THEORY AND EXPERIMENT

Numerical calculations were carried out for the cylinder shown in figure 1 for all three of the sizes of the cutout indicated. In each case the minimum value of the buckling load P_{cr} was obtained for $n = 2.666$, that is, when the bulge extended over three stringer fields. A typical buckling pattern is shown in figure 2. It corresponds to a cylinder having a 90° cutout.

Some details of the results of the calculations are presented in table II. The bending moments corresponding to the minimum buckling load are plotted against the size of the cutout in figure 5, which also contains the observed bending moment at buckling taken from the experimental report (reference 9).

CONCLUSIONS

A strain-energy theory has been developed for the calculation of the buckling load in general instability of reinforced circular monocoque cylinders which have a symmetric cutout on the compression side and are subjected to pure bending. When the theory was applied to the test cylinders of the earlier experimental report it was found that at buckling the bending moment applied to the cylinders having a 45°, 90°, and 135° cutout was 89.3, 64.8, and 44.5 percent, respectively, of the bending moment under which the same type of cylinder buckled when there was no cutout. The corresponding values obtained in the experimental investigations were 66, 47, and 31 percent when based on the experimental averages, and 68.2, 50.6, and 31.3 percent when based on the highest buckling loads observed.

Polytechnic Institute of Brooklyn
Brooklyn, N. Y., July 8, 1946.

APPENDIX

As a numerical example of buckling load determination, calculations are presented which correspond to cylinders 19, 20, and 23 of the test series described in reference 9. The following characteristics of these specimens will be needed for calculation:

Radius, r	in.	10
Length of cutout, L	in.	19.29
Distance between adjacent rings, L_1	in.	6.43
Number of rings contained in the length of cutout, m		2
Ring cross section	1/8 by 3/8 in.	(24S-T aluminum alloy)
Number of stringers in full portion of the cylinder, S		16
Stringer spacing along circumference, d	in.	3.927
Stringer cross section	in.	3/8 × 3/8 (24S-T aluminum alloy)
Sheet covering thickness, t	in.	0.012 (24S-T Alclad)
Cutout angle, 2α	deg	90
Young's modulus, E	psi	10.5×10^6
Stringer shear modulus, G	psi	3.9×10^6
Sheet shear modulus at zero compressive load, G_o	psi	3.9×10^6

Computations are first given corresponding to an assumed integral number s of stringer fields, say $s = 3$, included in the bulge on one side of the cylinder. The corresponding value of n can be obtained from equation (A1)

$$n = S/(2s) \tag{A1}$$

In this case $n = 8/3 = 2.666 \ldots$ Substitution of this value in equation (13) gives

$$M = 180{,}623.6027 + 8{,}829.5855a + 93{,}272.2882b$$
$$+ 1{,}999.4498a^2 + 12{,}140.0843b^2 + 2{,}892.2784ab \tag{A2}$$

as can be seen from table I. Substitution in equation (16) yields:

$$U_r = (3/16)(a_o^2/1000)(10.5 \times 10^6 \times 80.35 \times 10^{-6})(2 + 1)M \tag{A3}$$

where the moment of inertia I_r of the ring cross section augmented by an effective width of sheet (taken equal to the width of the ring) is

$$I_r = (1/12)(0.125 + 0.012)^3(0.375) = 80.35 \times 10^{-6} \text{ in.}^4 \tag{A4}$$

With the aid of equation (A2), the ring strain energy becomes:

$$U_r = a_o^2(85,718.0013 + 4,190.2299a + 44,263.9500b$$
$$+ 948.8729a^2 + 5,761.2834b^2 + 1,372.5799ab) \tag{A5}$$

The functions k_1, k_3, k_4 can be calculated from the assumed value of n. For this purpose it is convenient to arrange the trigonometric functions needed and their coefficients in tabular form, as shown in table III.

In this table the first three rows contain the trigonometric functions of the angle φ. As only values of k_1, k_3, k_4 which correspond to integral numbers of stringer fields will be used in the summations to be evaluated later, the angle φ was replaced by its equivalent $(2\pi i/S)$, where $2\pi/S$ is the angle subtended by one stringer field.

The third, fourth, and fifth rows contain the coefficients of the trigonometric functions appearing in each column above them. These coefficients are different for k_1, k_3, and k_4, and can be obtained from equations (9a), (10a), and (22a), respectively.

The value of k_1 for $i = 0$ is obtained by multiplying the expressions appearing in the same column in the first and fourth rows, and by adding the resulting eight products. Products of the elements of the second and fourth rows will lead to the value of k_1 for $i = 1$, and similarly for all others. The results are tabulated in table IV.

The next step is the assumption of the critical load P_{cr} for the purpose of obtaining the effective width of sheet $2w$ to be added to the stringers, the moments of inertia of the stringers, the effective shear modulus G_{eff}, and the shift of the neutral axis from the horizontal axis of the cylinder δ. From an assumed value of $P_{cr} = 3370.5$ lb, δ was found to be 2.4 in.; the other quantities are listed in table V. In table V column (2) is obtained from equation (31); column (3) by dividing column (2) by $E = 10.5 \times 10^6$ psi. Columns (4), (5), and (6) can be most conveniently obtained by the use of a previously drawn curve of the strain ϵ against the area A_{eff} of stringer and effective width combination. A curve of this type was used in the present calculations and was constructed with the aid of the following formula for effective width:

$$2w = (1/\epsilon)(d/r)\left\{0.3t + 1.535\left[(t/d)(\epsilon r - 0.3t)r^{1/2}\right]^{2/3}\right\}$$

Columns (7) and (8) were calculated according to the principles stated in reference 1. In column (9) the value of the buckling load of the sheet ϵ_{cr} was calculated to be 3.3×10^{-4}. Column (10) was obtained from equation (25).

The strain energy stored in the stringers because of bending in the radial direction is from equation (18):

$$U_{str_r} = a_o^2 \left[\pi^4/(19.29)^3\right] 10.5 \times 10^6 \sum_{i=o}^{2} k_1^2 \, I_{str_r} \tag{A6}$$

since the modulus E is constant for all stringers. The summation indicated is the sum of the product of the values in column (7) in table V for any value of i, and the squares of the quantity k_1 in table IV for the same value of i. U_{str_t} is obtained by substituting column (8) for column (7) in table V and k_3 for k_1 in table IV. These operations yield:

$$U_{str} = U_{str_r} + U_{str_t} = a_o^2(102{,}882.5969 - 1{,}453.8391a$$

$$+ 53{,}374.5680b + 3{,}945.3160a^2 + 7{,}242.3558b^2 - 409.4065ab) \tag{A7}$$

The torsional strain energy in the stringers contains the summation $\sum k_4^2$, as can be seen from equation (23). This is the sum of the squares of the values of k_4 given in table IV. The complete result for the torsional strain energy was found to be:

$$U_t = a_o^2(300{,}981.0280 + 25{,}092.1760a + 165{,}584.300b$$

$$+ 1{,}656.7116a^2 + 22{,}830.3894b^2 + 6{,}426.610ab) \tag{A8}$$

The expression given in equation (28) for the strain energy due to shear in the sheet covering required the evaluation of the quantity R_i. This quantity, given in equation (30), can be easily obtained if it is noticed that the terms $k_{1,i} - k_{1,i+1}$ and $k_{3,i} + k_{3,i+1}$ are respectively the difference and the sum of terms appearing in adjacent rows of the k_1 and k_3 columns of table IV. With the values of G_{eff}/G_o taken from table V and with $\alpha_r = 0.03927$ and $\alpha_t = -0.5$ from equation (27) the shear strain energy was found to be:

$$U_{sh} = a_o^2(16,645.4078 + 6,416.0112a + 5,515.5294b + 1,180.0227a^2 + 1,232.0806b^2 + 188.3523ab) \tag{A9}$$

The work done by the external forces is given in equation (33). Each term of the summation contained in that equation is the sum of the squares of the values of k and k (table IV) multiplied by P_i/P_{cr}, which can be obtained from table V. The result of these calculations was:

$$W = P_{cr}\, a_o^2(17.522403 - 2.594795a + 9.796509b + 1.422668a^2 + 1.426108b^2 - 0.429835ab) \tag{A10}$$

The values of the strain energies and external work taken from equations (A5), (A7), (A8), (A9), and (A10) were substituted in equation (34), with the result:

$$\begin{aligned} &a_o^2(506,227.034 + 34,244.578a + 268,738.347b \\ &+ 7,730.9227a^2 + 37,066.1019b^2 + 7,578.1357ab) \\ &= a_o^2\, P_{cr}(17.522403 - 2.594795a + 9.796509b \\ &+ 1.422668a^2 + 1.426108b^2 - 0.429835ab) \end{aligned} \tag{A11}$$

According to equation (36), equation (A11) was solved for P_{cr}, and the numberator and denominator of the resulting expression were differentiated with respect to a and b. The result is given in equations (A12):

$$\left.\begin{aligned} \frac{34,244.578 + 15,461.8454a + 7,578.1357b}{-2.594795 + 2.845336a - 0.429835b} &= P_{cr} \\ \frac{268,738.347 + 7,578.1357a + 74,132.2038b}{9.796509 - 0.429835a + 2.852216b} &= P_{cr} \end{aligned}\right\} \tag{A12}$$

These equations were reduced to two linear equations in a and b by assuming a value of $P_{cr} = 3770$ and clearing fractions. These equations were solved simultaneously for a and b, with the following result:

$$\begin{aligned} a &= -3.0541 \\ b &= -3.2142 \end{aligned} \tag{A13}$$

Substitution of these values in equation (A11) led to a new value of $P_{cr} = 3793$ lb. This result was considered to be sufficiently close to the original assumption to make it unnecessary to repeat the calculations for this value of n.

Repetition of the entire procedure for values of n corresponding to $s = 2$ and $s = 4$ gave $P_{cr} = 11544$ lb and $P_{cr} = 3902$ lb, respectively. The value $P_{cr} = 3793$ lb was the lowest of the three and was therefore considered the true buckling load.

REFERENCES

1. Hoff, N. J., and Klein, Bertram: The Inward Bulge Type Buckling of Monocoque Cylinders. I – Calculation of the Effect upon the Buckling Stress of a Compressive Force, a Nonlinear Direct Stress Distribution, and a Shear Force. NACA TN No. 938, 1944.

2. Hoff, N. J., Fuchs, S. J., and Cirillo, Adam J.: The Inward Bulge Type Buckling of Monocoque Cylinders. II – Experimental Investigation of the Buckling in Combined Bending and Compression. NACA TN No. 939, 1944.

3. Hoff, N. J., and Klein, Bertram: The Inward Bulge Type Buckling of Monocoque Cylinders. III – Revised Theory Which Considers the Shear Strain Energy. NACA TN No. 968, 1945.

4. Guggenheim Aeronautical Laboratory, California Institute of Technology: Some Investigations of the General Instability of Stiffened Metal Cylinders. I – Review of Theory and Bibliography. NACA TN No. 905, 1943.

5. Guggenheim Aeronautical Laboratory, California Institute of Technology: Some Investigations of the General Instability of Stiffened Metal Cylinders. II – Preliminary Tests of Wire-Braced Specimens and Theoretical Studies. NACA TN No. 906, 1943.

6. Guggenheim Aeronautical Laboratory, California Institute of Technology: Some Investigations of the General Instability of Stiffened Metal Cylinders. III – Continuation of Tests of Wire-Braced Specimens and Preliminary Tests of Sheet-Covered Specimens. NACA TN No. 907, 1943.

7. Guggenheim Aeronautical Laboratory, California Institute of Technology: Some Investigations of the General Instability of Stiffened Metal Cylinders. IV – Continuation of Tests of Sheet-Covered Specimens and Studies of the Buckling Phenomena of Unstiffened Circular Cylinders. NACA TN No. 908, 1943.

8. Guggenheim Aeronautical Laboratory, California Institute of Technology: Some Investigations of the General Instability of Stiffened Metal Cylinders. V – Stiffened Metal Cylinders Subjected to Pure Bending. NACA TN No. 909, 1943.

9. Hoff, N. J., and Boley, Bruno A.: Stresses in and General Instability of Monocoque Cylinders with Cutouts. I – Experimental Investigation of Cylinders with a Symmetric Cutout Subjected to Pure Bending. NACA TN No. 1013, 1946.

10. Hoff, N. J., Boley, Bruno A., and Klein, Bertram: Stresses in and General Instability of Monocoque Cylinders with Cutouts. II – Calculation of the Stresses in a Cylinder with a Symmetric Cutout. NACA TN No. 1014, 1946.

11. Hoff, N. J., Boley, Bruno A., and Viggiano, Louis R.: Stresses in and General Instability of Monocoque Cylinders with Cutouts. IV – Pure Bending Tests of Cylinders with Side Cutout. NACA TN No. 1264 (to be published)

12. Hoff, N. J.: General Instability of Monocoque Cylinders. Jour. Aero. Sci., vol. 10, no. 4, pp. 105–114, 130, April 1943.

13. Hoff, N. J., and Boley, Bruno A.: The Shearing Rigidity of Curved Panels under Compression. NACA TN No. 1090, 1946.

14. Hoff, N. J., Klein, Bertram, and Libby, Paul A.: Numerical Procedures for the Calculation of the Stresses in Monocoques. IV – Influence Coefficients of Curved Bars for Distortions in Their Own Plane. NACA TN No. 999, 1946.

TABLE I.- VALUES OF M

s	n	Constant	a	b	a^2	b^2	ab
2	4	624952.2978	31194.1304	322964.0316	6969.3405	42066.8361	10160.6399
3	2.666...	180623.6027	8829.5855	93272.2882	1999.4498	12140.0843	2892.2784
4	2	73562.5088	3487.1679	37945.9796	805.8186	4933.8711	1151.0000
5	1.6	35969.3603	1634.3092	18527.8397	388.6488	2405.8392	546.4166
6	1.333...	19654.0645	843.6900	10105.7565	208.7710	1310.0700	286.8150

NATIONAL ADVISORY
COMMITTEE FOR AERONAUTICS

TABLE II

Size of cutout (deg)	$s=\frac{S}{2n}$	n	a	b	P_{cr}	M_{cr} calculated	M_{cr} average experimental	Percent difference of experimental average	M_{cr} highest experimental moment	Percent difference of highest experimental moment
45	2	4	0.3011	-3.6903	13,564					
	3	2.666...	-3.1734	-3.1710	3,722	258,109	192,800	33.9	197,600	30.6
	4	2	-2.7612	-3.2710	3,875					
90	2	4	.3417	-3.6809	11,544					
	3	2.666...	-3.0541	-3.2142	3,793	187,216	135,800	37.9	146,000	28.2
	4	2	-2.7248	-3.2881	3,902					
135	2	4	.3921	-3.6881	14,549					
	3	2.666...	-2.9556	-3.2553	3,847	128,471	89,500	43.5	92,200	39.3
	4	2	-2.6519	-3.3001	3,956					

NATIONAL ADVISORY
COMMITTEE FOR AERONAUTICS

TABLE III

i	Constant	$\frac{2n\pi i}{S}=n\phi$	$\cos\frac{2n\pi i}{S}$	$\cos\frac{4n\pi i}{S}$	$\cos\frac{6n\pi i}{S}$	$\sin\frac{2n\pi i}{S}$	$\sin\frac{4n\pi i}{S}$	$\sin\frac{6n\pi i}{S}$
0	1	0	1	1	1	0	0	0
1	1	1.047197	0.5	−0.5	−1	0.8660255	0.8660255	0
2	1	2.094395	−0.5	−0.5	1	0.8660255	−0.8660255	0
Multiplier for k_1	1	0	a	1.6a − 1.8	0.6a − 0.8	b	3.2b + 3.6π	1.8b + 2.4π
Multiplier for k_3	0	−0.375	0.375b	0.6b + 2.1205750	0.225b + 0.9424778	−0.375a	−0.3a + 0.3375	−0.075a + 0.10
Multiplier for k_4	0	0	2.666...b	17.0666...b + 60.3185789	14.4b + 60.3185789	−2.666...a	−8.5333...a + 9.6	−4.8a + 6.4

NATIONAL ADVISORY
COMMITTEE FOR AERONAUTICS

TABLE IV

i	k_1	k_3	k_4
0	$-1.6 + 3.2a$	$3.0630528 + 1.2b$	$120.637166 + 34.13333\ldots b$
1	$12.4945177 - 0.9a + 3.6373071b$	$-2.10318072 - 0.5845672a - 0.3375b$	$-82.164026 - 9.699486a - 21.6b$
2	$-8.6945177 - 0.7a - 1.9052561b$	$-1.19549133 - 0.06495191a - 0.2605b$	$21.845445 + 5.080683a + 4.533\ldots b$

TABLE V

(1)	(2)	(3)	(4)	(5)	(6)	(7)	(8)	(9)	(10)
i	P_i	ϵA	ϵ	A_{eff}	2w	I_{str_r}	I_{str_t}	ϵ/ϵ_{cr}	G_{eff}/G_o
0	3370.5	3.21×10^4	21.4×10^4	0.1505	1.567	2025×10^6	$3,500 \times 10^6$	6.06	0.495
1	2215.815	2.1103	12.8	.165	2.000	2340	10,000	3.88	.562
2	853.75	0.8131	4.33	.1878	3.927	2392	62,200	1.312	.745

NATIONAL ADVISORY
COMMITTEE FOR AERONAUTICS

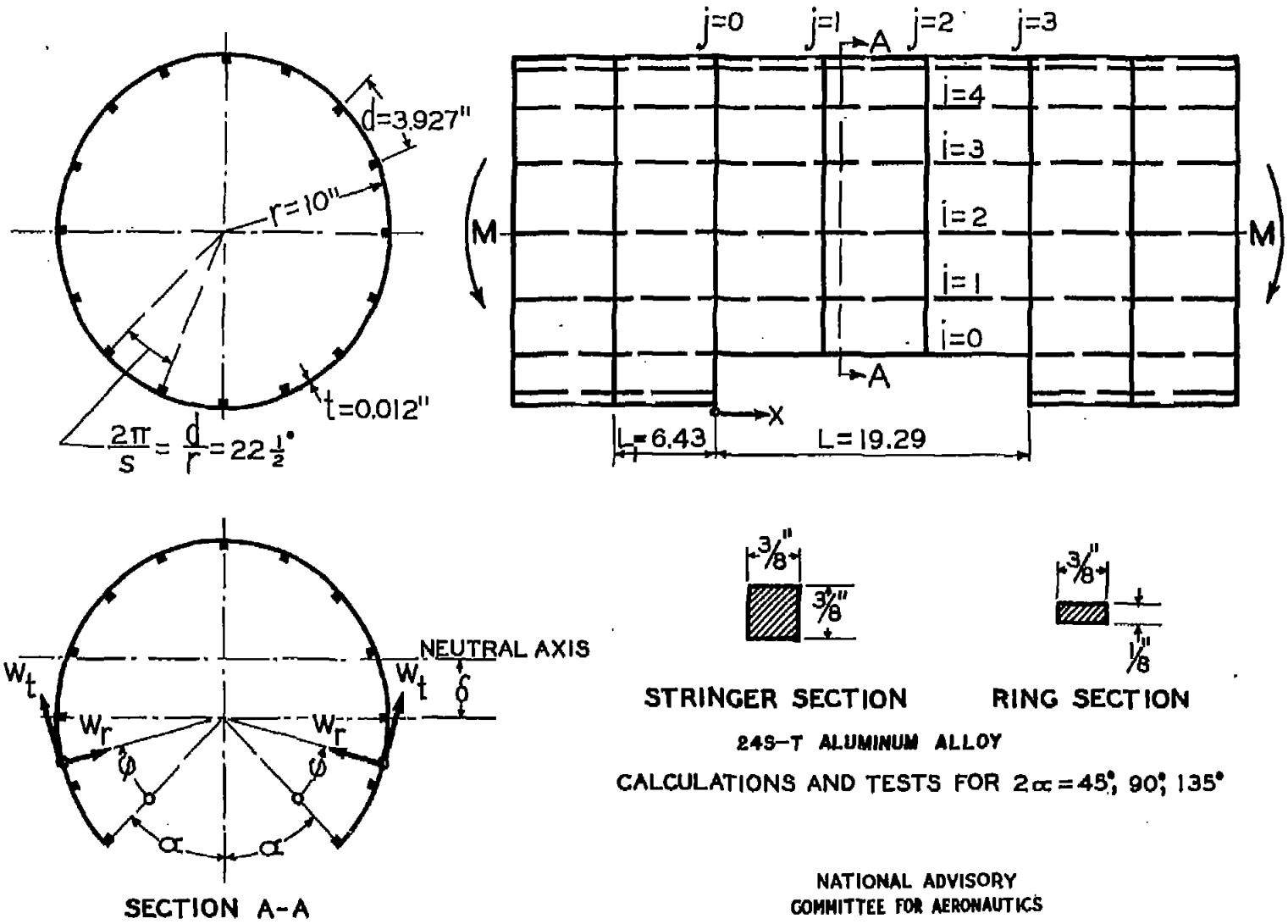

SECTION A-A

FIGURE 1.- MONOCOQUE CYLINDER.

$n = 2.666....$
$a = -3.0541$
$b = -3.2142$
$s = 3$

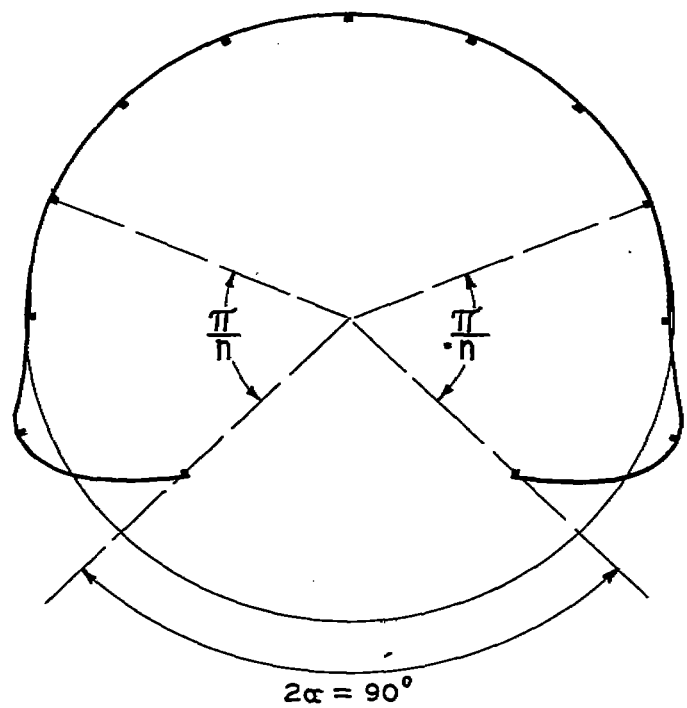

NATIONAL ADVISORY
COMMITTEE FOR AERONAUTICS

FIGURE 2.— TYPICAL RADIAL DEFLECTION PATTERN.
DEFLECTION EXAGGERATED

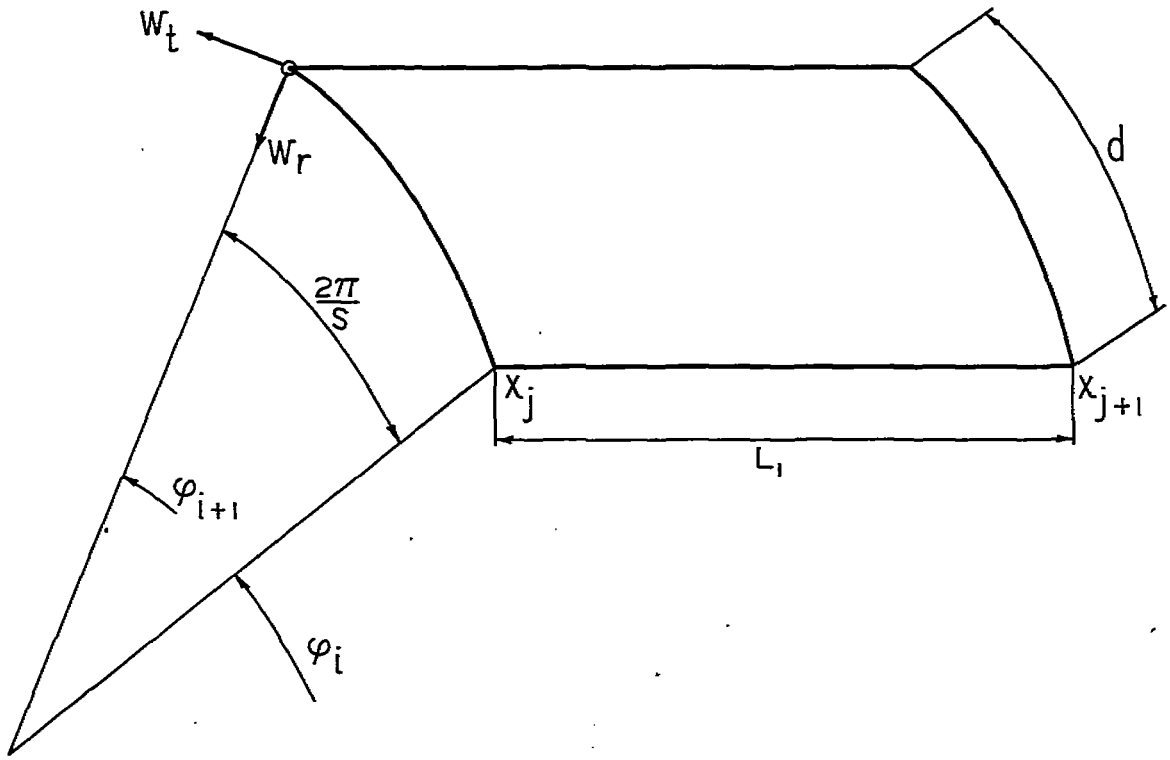

NATIONAL ADVISORY
COMMITTEE FOR AERONAUTICS

FIGURE 3.— NOTATION AND SIGN CONVENTION FOR SHEAR IN A PANEL.

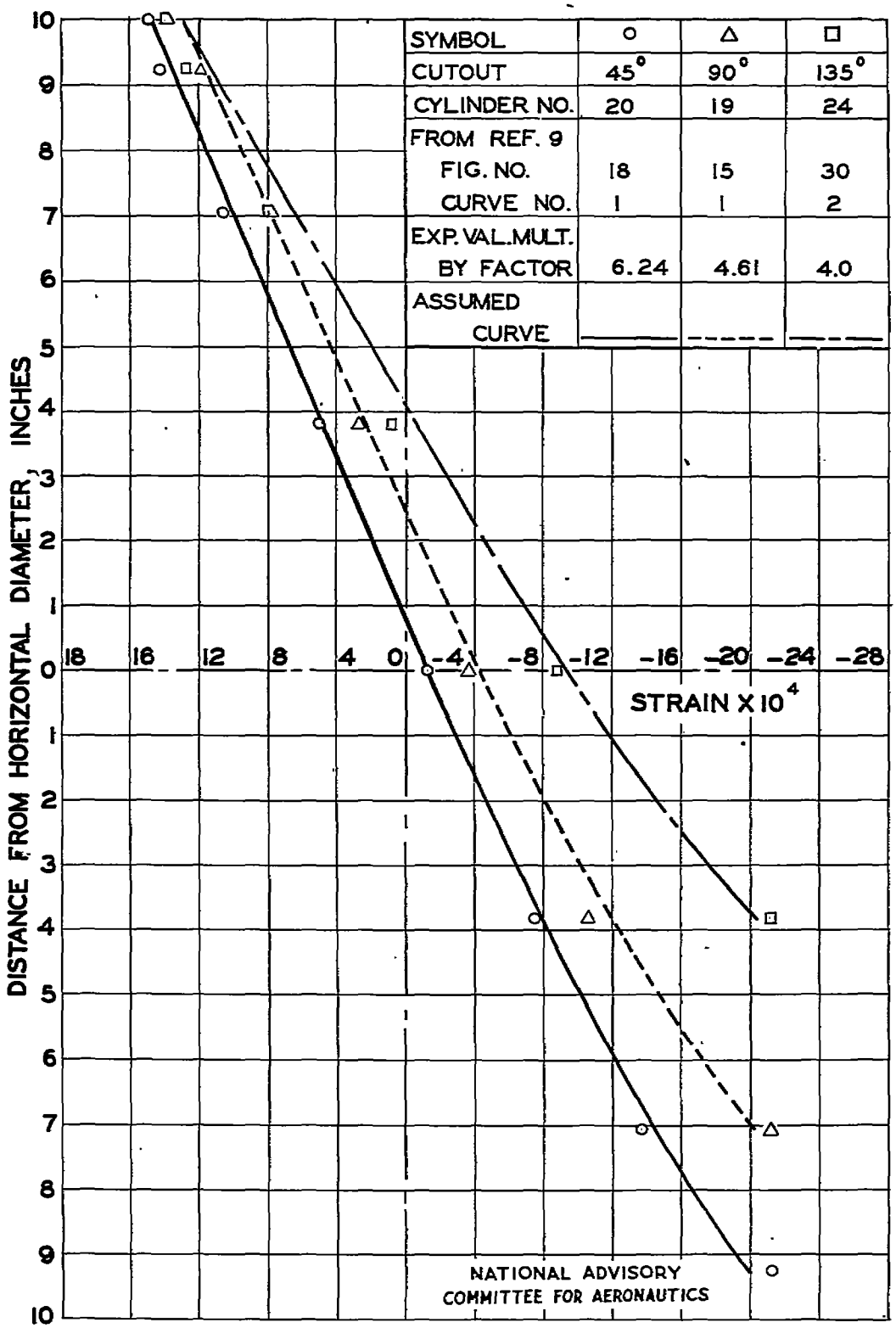

FIGURE 4.- COMPARISON OF EXPERIMENTAL AND ASSUMED STRAIN DISTRIBUTION.

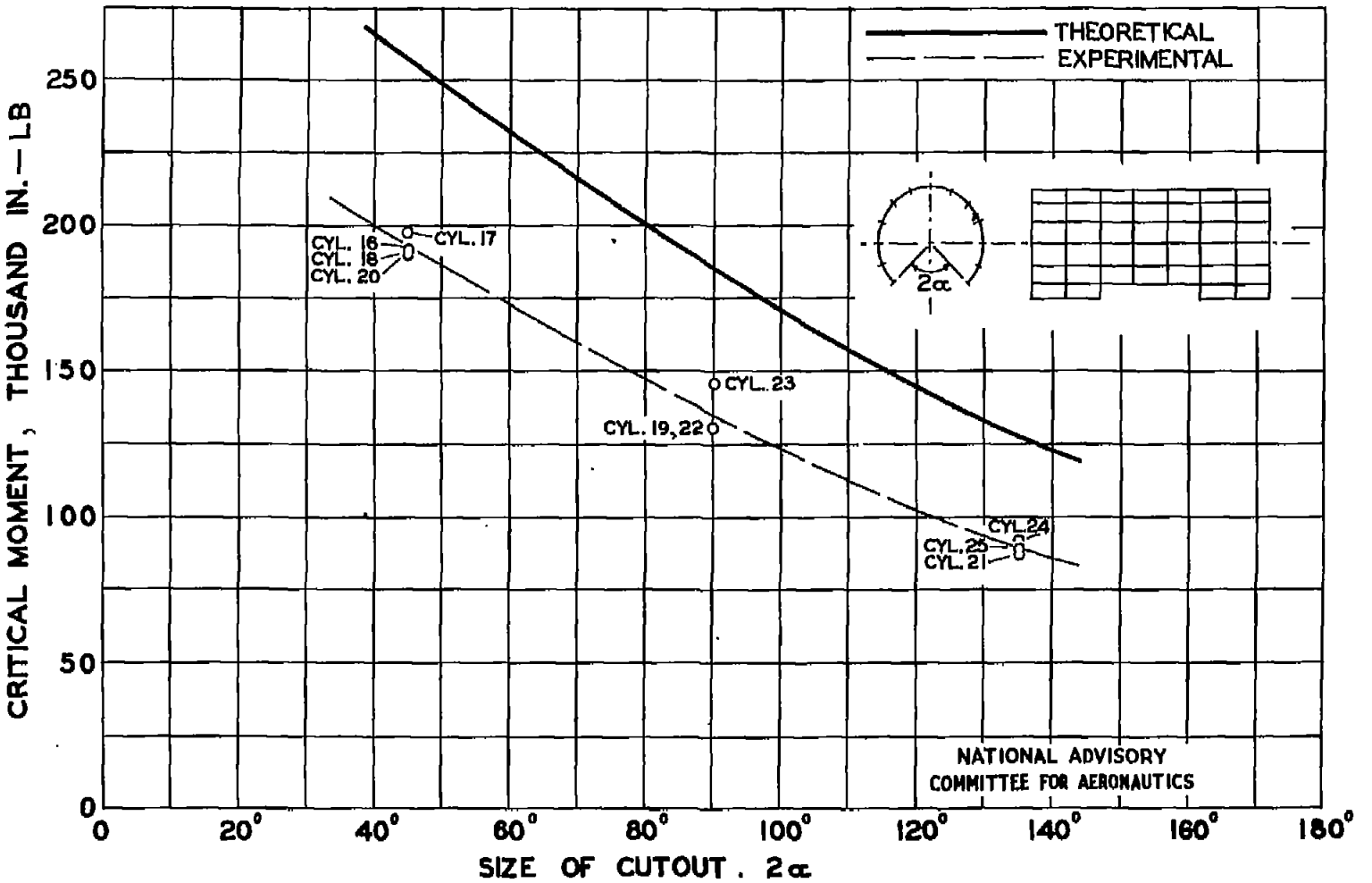

FIGURE 5.– COMPARISON OF CALCULATED AND EXPERIMENTAL CRITICAL MOMENTS.

EDM FORM 50 (19 FEB 47)

Hoff, N. J.
Boley, Bruno A.

AUTHOR(S)

P- 7-2-22

DIVISION: Stress Analysis and Structures (7)
SECTION: Structural Theory and Analysis Methods (2)
CROSS REFERENCES: Cylinders - Stress analysis (28505); Cylinders, Monocoque (28580)

ATI- 7990

ORIG. AGENCY NUMBER

TN-1263

REVISION

AMER. TITLE: Stresses in and general instability of monocoque cylinders with cutouts - III - Calculation of the buckling load of cylinders with symmetric cutout subjected to pure bending

ORIGINATING AGENCY: National Advisory Committee for Aeronautics, Washington, D. C.

TRANSLATION:

COUNTRY	LANGUAGE	FORG'N.CLASS	U. S.CLASS.	DATE	PAGES	ILLUS.	FEATURES
U.S.	Eng.		Unclass.	May'47	31	9	tables, diagrs, graphs

ABSTRACT

A strain energy theory has been developed for calculation of buckling load in instability of reinforced circular monocoque cylinders which have a symmetric cutout on compression side and are subjected to pure bending. Applied to test cylinders, theoretical curve has shape similar to that obtained experimentally, but theoretical values are too high, deviating up to 39.3%. Detailed comparative figures are presented in numerical tables.

NOTE: Requests for copies of this report must be addressed to: N.A.C.A., Washington, D. C.