# REPORT No. 754

## OPERATING TEMPERATURES OF A SODIUM-COOLED EXHAUST VALVE AS MEASURED BY A THERMOCOUPLE

By J. C. Sanders, H. D. Wilsted, and B. A. Mulcahy


### SUMMARY

*A thermocouple was installed in the crown of a sodium-cooled exhaust valve. The valve was then tested in an air-cooled engine cylinder and valve temperatures under various engine operating conditions were determined. A temperature of 1337° F was observed at a fuel-air ratio of 0.064, a brake mean effective pressure of 179 pounds per square inch, and an engine speed of 2000 rpm. Fuel-air ratio was found to have a large influence on valve temperature, but cooling-air pressure and variation in spark advance had little effect. An increase in engine power by change of speed or mean effective pressure increased the valve temperature. It was found that the temperature of the rear-spark-plug bushing was not a satisfactory indication of the temperature of the exhaust valve.*


### INTRODUCTION

In the course of research on cylinder cooling by the NACA at Langley Field, frequent failure of the sodium-cooled exhaust valves in one type of air-cooled engine cylinder was experienced. The crowns of these valves were badly corroded and collapsed. In some instances the crown had ruptured, permitting the sodium to leak into the cylinder.

A review of published information revealed that high temperature accelerates the corrosion and greatly reduces the creep strength of these metals. The Brinell hardness and the creep strength of a valve steel at elevated temperatures are shown in the following table. The Brinell hardness was obtained from reference 1, and the creep strength was obtained from reference 2.

| Temperature (°F) | Brinell hardness | Creep strength (percent) |
|---|---|---|
| 800 | ------- | 100 |
| 900 | 165 | 70 |
| 1000 | ------- | 47 |
| 1100 | 143 | 30 |
| 1200 | ------- | 17 |
| 1300 | 98 | 9 |
| 1400 | ------- | 4 |
| 1500 | 47 | ------- |

The results of a practical demonstration of the effect of temperature on the strength and corrosion resistance of valve steel are shown in figure 1. Two of the valves were stock sodium-cooled valves and one was the water-cooled valve described in reference 3. The water-cooled valve was used in tests that reproduced the conditions of the tests made on the sodium-cooled valves. The fuels used in all tests contained tetraethyl lead. Conditions of the tests were as follows:

Previous test (reference 3):

| | Sodium-cooled valve (fig. 1 (a)) | Water-cooled valve (fig. 1 (c)) |
|---|---|---|
| Maximum imep, lb./sq. in | 256 | 256 |
| Maximum power, ihp | 137 | 137 |
| Fuel-air ratio | 0. 053–0. 122 | 0. 055–0. 122 |
| Maximum temperature, rear-spark-plug bushing, ° F | 480 | 480 |
| Tetraethyl lead in fuel, ml per gal | 3 | 3 |
| Time with coolant, hr | 36. 7 | 49. 5 |
| Time without coolant, hr | 0 | 6. 5 |
| Total time, knock test, hr | 36. 7 | 56. 0 |
| Condition of valve | Ruined | Satisfactory |

High-power test:

| | Sodium-cooled valve (fig. 1 (b)) | Oil-cooled valve (fig. 1 (c)) |
|---|---|---|
| Maximum imep, lb./sq. in | 329 | 310 |
| Maximum power, ihp | 215 | 202 |
| Fuel-air ratio | 0. 10 | 0. 10 |
| Maximum temperature, rear-spark-plug bushing, ° F | 484 | 517 |
| Tetraethyl lead in fuel, ml per gal | 6 | 6 |
| Total time, high-power test, hr | 8. 5 | 8. 0 |
| Total service time, hr | 8. 5 | 64. 0 |
| Condition of valve | Ruined | Satisfactory |

In figure 1 the templets show the contours of new valves. The crowns of the two sodium-cooled valves were corroded and collapsed. The water-cooled valve was not corroded and was flattened only slightly. This flattening probably occurred during the test in which no coolant was circulated through the valve. No flattening of the oil-cooled valve was observed during the test at high power.

The sodium-cooled valve used in the test of reference 3 was observed to emit visible radiations during operation, but water-cooled and oil-cooled valves were observed to be black. These observations and the temperature measurements of the oil and the water leaving the valves indicated that the valves were operating at widely separated temperatures.

The evidence of these tests, together with the experience of Banks (reference 4), Colwell (reference 5), and Young (reference 6), shows that valve temperature has a vital influence on valve life.

Design features that might reduce valve temperatures are increased diameter of valve stem, increased cross-sectional area of metal for flow of heat from valve guide to cooling fins, improved fin design, and insulation of the exhaust-valve-guide boss from the exhaust gas. An increase in stem diameter will give a larger area of contact with the guide and



740923—48——4

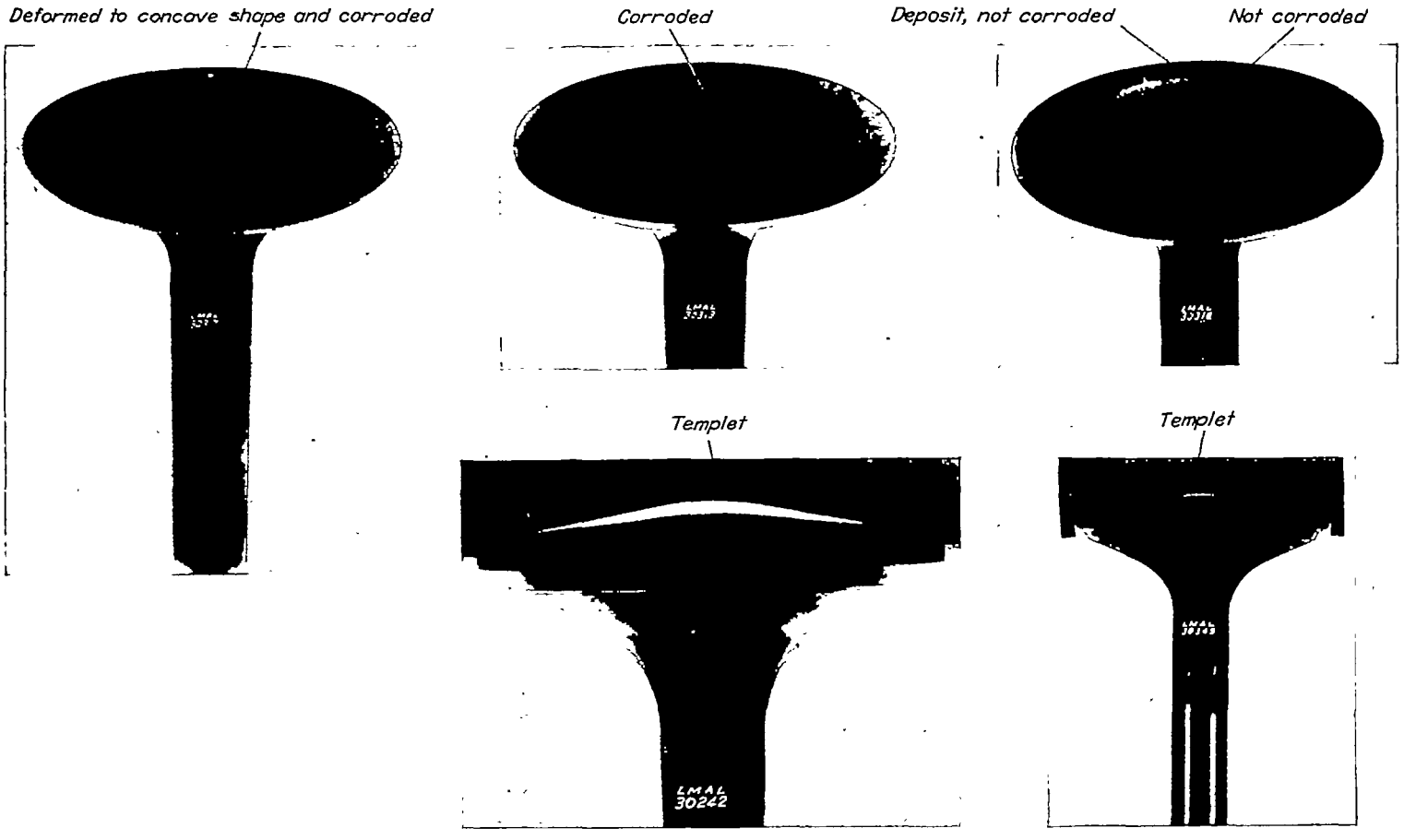


(a) Sodium cooled. (b) Sodium cooled. (c) Water cooled.

FIGURE 1.—Deformation and corrosion of exhaust valves cooled by sodium and by circulating water.

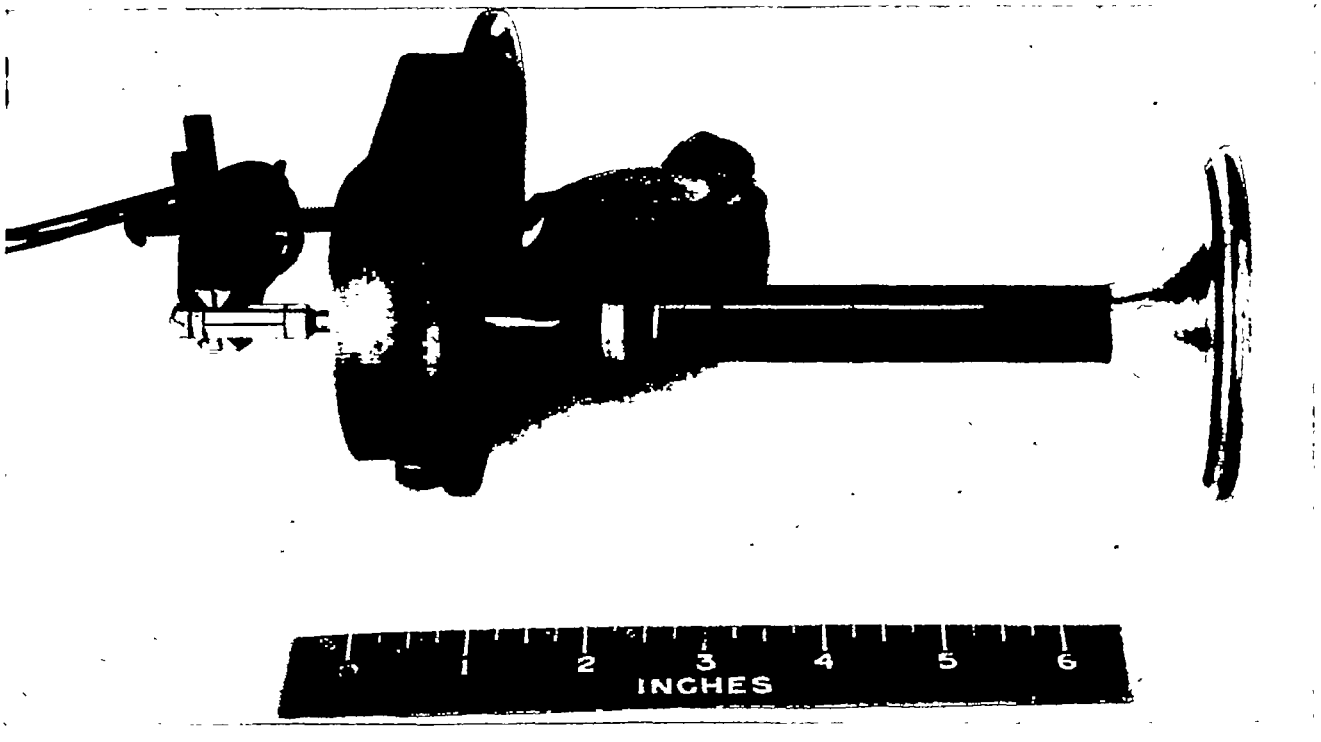


FIGURE 2.—Photograph of thermocouple-equipped exhaust valve and associated parts.

will permit the coolant to circulate more freely. Provision for dissipation of heat from the boss is particularly important when sodium-cooled valves are used. Some cylinder heads do not have enough metal around their exhaust-valve bosses to adequately transfer heat to the fins. A protecting shield around the boss will reduce the heat transfer from the exhaust gas to the boss and will consequently result in better valve cooling.

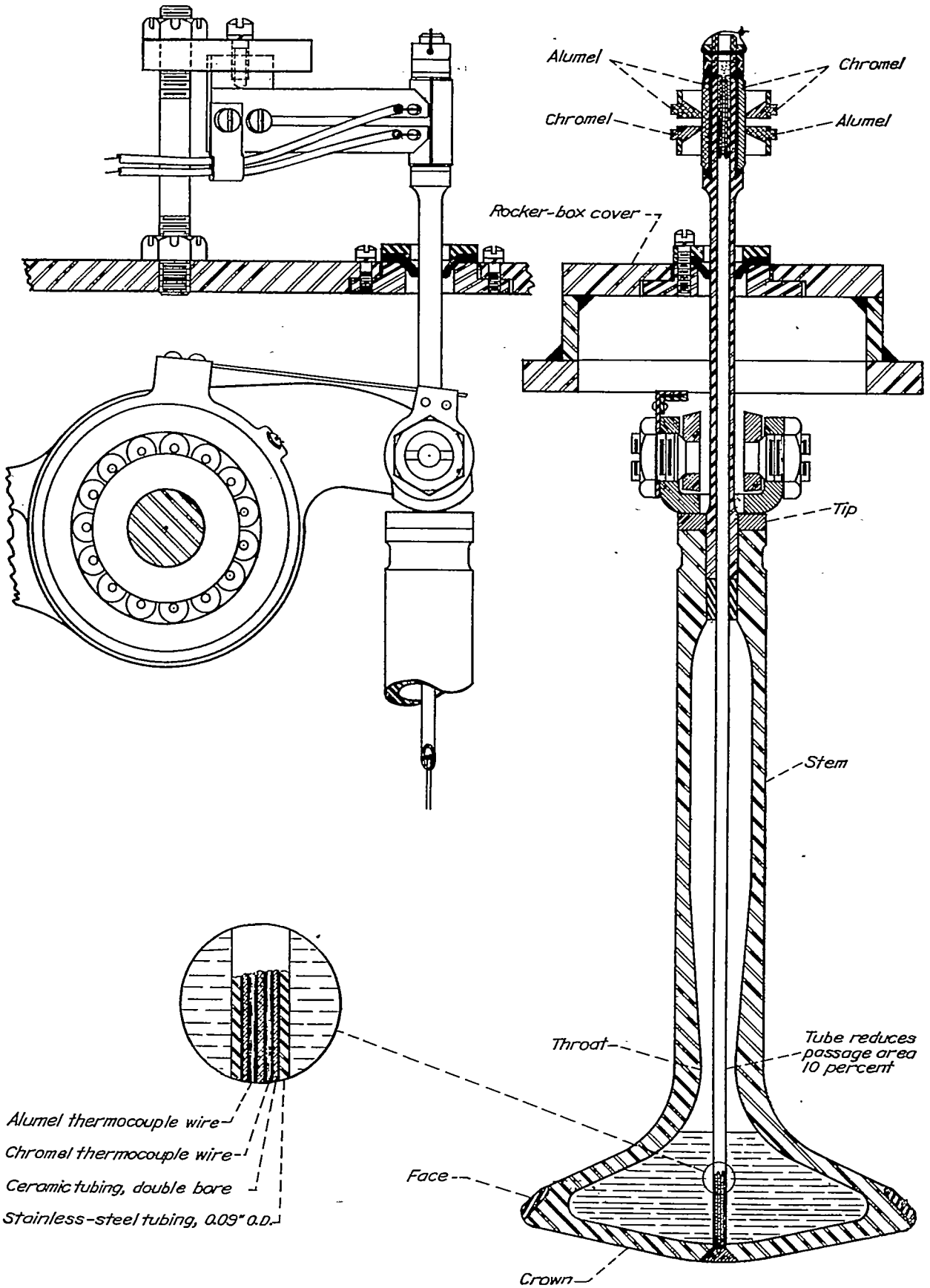


FIGURE 3.—Details of sodium-cooled exhaust valve equipped with a thermocouple.

Direct measurement of valve temperatures would make possible the accurate determination of the effects of the foregoing changes in cylinder design on the temperature of the exhaust valve. The development of a means of measuring valve temperatures was therefore undertaken.

A review of published literature disclosed little information on the measurement of temperatures in a sodium-cooled exhaust valve during normal engine operation. Colwell (reference 7) tested a sodium-cooled valve of a special steel for which the relation between the hardness and the drawing temperature was accurately known. The valve was hardened and then used in an engine. Upon removal from the engine, the valve was sectioned and the temperatures attained at various locations on the valve were determined by hardness measurements. By this method it was estimated that the center of the valve crown reached a temperature between 1140° and 1300° F. The operating conditions, however, were not reported.

The temperatue of an exhaust valve has been estimated by visual observation of its color (reference 3) and found to be 1300° to 1400° F at a fuel-air ratio of 0.068 and at an indicated mean effective pressure of 190 pounds per square inch. This method of temperature determination is, however, open to criticism because the scale on the surface of the exhaust valve may reach a higher temperature than the valve materials.

This report describes an exhaust valve equipped with a thermocouple and gives valve temperatures observed under various engine operating conditions. Effects of variations in mean effective pressure, engine speed, fuel-air ratio, spark advance, and cooling-air pressure drop upon valve temperature are shown.

The tests were conducted at Langley Memorial Aeronautical Laboratory, Langley Field, Va., in August 1942.

## APPARATUS

**Thermocouple installation.**—In engine operation the observed valve reciprocated rapidly and rotated slowly at a rate depending upon the engine speed. At an engine speed of 2200 rpm the valve rotated 2 rpm. It was therefore necessary to provide sliding brushes to make contact with the valve thermocouple. For this type of installation the thermocouple must be rugged enough to withstand the high accelerations of the valve.

Figure 2 is a photograph showing the valve, the rocker with special tappet, the rocker-box cover, and the thermocouple-contact system. The details of the valve construction are presented in figure 3. The tip of the valve was opened with a drill, and the sodium was removed. A steel tube containing the thermocouple leads was installed through the stem and welded to the crown in such a manner that the thermocouple junction was embedded in the weld one-sixteenth inch from the surface of the crown. The valve was dried, charged with the proper amount of sodium, and sealed with a hollow tapered plug driven and silver-soldered into the valve stem. The tube for carrying the commutator was silver-soldered into the tip of the valve stem, and the commutator was assembled. The commutator consists of two cylindrical elements, semicircular in cross section and clamped with insulators to the stem. Each element is composed of the same material as the thermocouple wire to which it is attached; one is chromel and the other is alumel.

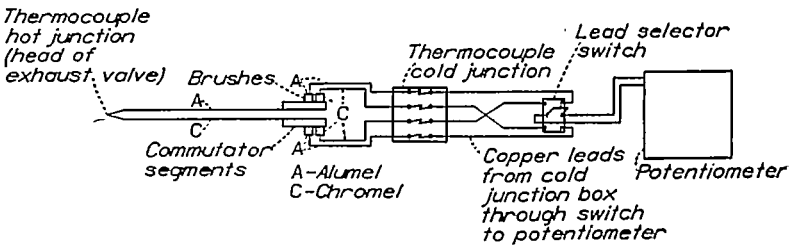


FIGURE 4.—Circuit diagram for exhaust-valve thermocouple.

The function of the brushes shown in figures 2 and 3 is clarified by the circuit digram in figure 4. The proper continuity of the thermocouple-lead wires to the cold junction is maintained by a lead-selector switch that makes it always possible to have a chromel lead from the chromel commutator bar and an alumel lead from the alumel commutator bar. At every half revolution of the valve, the selector switch is changed to match the polarity of the commutator.

A commutator was chosen instead of slip rings because a commutator could be made lighter than a set of slip rings and would consequently result in lower stresses during the periods of acceleration of the valve. Experience with the commutator has since shown that the saving in weight does not warrant the added complication of its brushes. Another valve has been made with slip rings.

**The test engine.**—The tests were run on a single-cylinder engine having an air-cooled cylinder. The bore is 6⅛ and the stroke is 7 inches; the compression ratio is 6.7. A diagrammatic layout of the engine and associated parts is shown in figure 5.

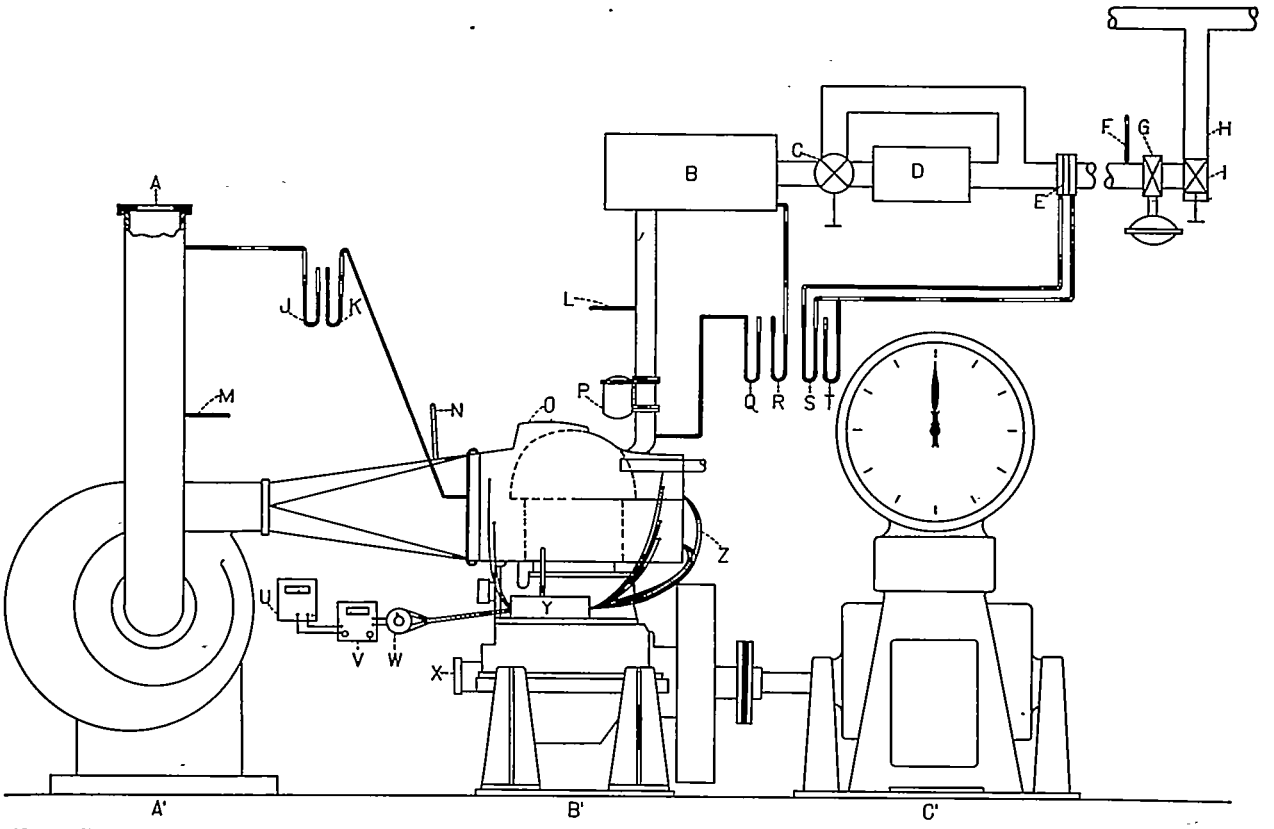


A, orifice, cooling-air.
B, surge tank.
C, mixing valve, temperature-control.
D, heaters.
E, orifice, combustion-air.
F, thermometer, combustion-air-orifice.
G, pressure regulator.
H, supply line, combustion-air.
I, valve, shut-off.
J, manometer, cooling-air-orifice differential-pressure.
K, manometer, cooling-air static-pressure.
L, thermometer, combustion-air.
M, thermometer, cooling-air-orifice.
N, thermometer, cooling-air-supply.
O, cowling.
P, carburetor.
Q, manometer, manifold-pressure.
R, manometer, surge-tank-pressure.
S, manometer, combustion-air-orifice differential-pressure.
T, manometer, combustion-air-orifice upstream-pressure.
U, light-beam galvanometer.
V, potentiometer.
W, selector switch.
X, distributor.
Y, cold-junction box.
Z, thermocouple leads.
A', cooling-air blower.
B', engine.
C', dynamometer.

FIGURE 5.—Diagrammatic layout of equipment.

The cylinder was enclosed in a closely fitting steel jacket having an opening on the upstream side slightly less than the frontal area of the cylinder and an opening on the downstream side about 1.4 times the flow area between the fins on the cylinder. In addition to the thermocouples normally used in cooling tests, one thermocouple was located on the bushing of the exhaust-valve guide and one was located against the outside of the exhaust-valve-seat insert, as shown

in figure 6. The thermocouple on the seat insert measured the temperature of the cylinder head somewhere in a zone between the outside surface of the insert and one thirty-second inch from the insert. It is probable that, as a result of the very poor thermal conductivity of the seat insert, the surface on which the valve was seated was much hotter than indicated by this thermocouple. A thermocouple consisting of an exposed junction of 14-gage chromel and alumel wires was installed in the exhaust stack. The junction was near the center of the exhaust pipe. The length of each wire exposed to the exhaust gas was about three-fourths inch.

## TEST METHODS

A series of six tests was run to determine the influence of the principal engine variables on the temperature of the exhaust valve. The engine variables investigated were:

| | |
|---|---|
| Indicated mean effective pressure, lb/sq in. | 98–254 |
| Engine speed, rpm | 1400–2400 |
| Fuel-air ratio (two tests) | 0.051–0.112 |
| Spark advance, deg B. T. C. | 0–45 |
| Cooling-air pressure drop, in. water | 1–30 |

In each test all of the engine variables except the one under investigation were held constant. In the investigation of the effect of indicated mean effective pressure on valve temperature, the following constant conditions were maintained:

| | |
|---|---|
| Engine speed, rpm | 2200 |
| Fuel-air ratio | 0.080 |
| Spark advance, deg B. T. C. | 19 |
| Cooling-air pressure drop, in. water | 16 |
| Carburetor-air temperature, °F | 150 |

Except as specifically noted, these constant conditions were maintained during all the other tests. The variable-speed test was run at an indicated mean effective pressure of 210 pounds per square inch, the variable-spark-advance test at 167 pounds per square inch, and the variable-cooling test at 130 pounds per square inch.

Data from two tests were obtained to show the effects of fuel-air ratio on exhaust-valve temperature. Observations of sodium-cooled exhaust-valve temperatures were made in February 1942 during tests (reference 3) made to determine the effects of fuel-air ratio upon the maximum permissible power as limited by audible knock. During these earlier tests, the cooling-air pressure was regulated to maintain the temperature at the rear of the barrel at 360° F; the temperature of the rear-spark-plug bushing varied, with changes of fuel-air ratio, between 395° and 470° F. At each fuel-air ratio tested the indicated mean effective pressure was raised until knock became audible. The absolute manifold pressure and the fuel flow were reduced to 93 percent of the values observed with audible knock. The color of the exhaust valve as observed through a hole in the exhaust pipe was compared with a color-temperature chart and the valve temperature thus estimated was recorded. Six months later the operating conditions of this test were repeated, and the exhaust-valve temperatures were measured by a thermocouple.

Additional tests showing the effects of fuel-air ratio on valve temperature when the indicated mean effective pressure is constant were not made because the thermocouple failed after 13 hours of operation.

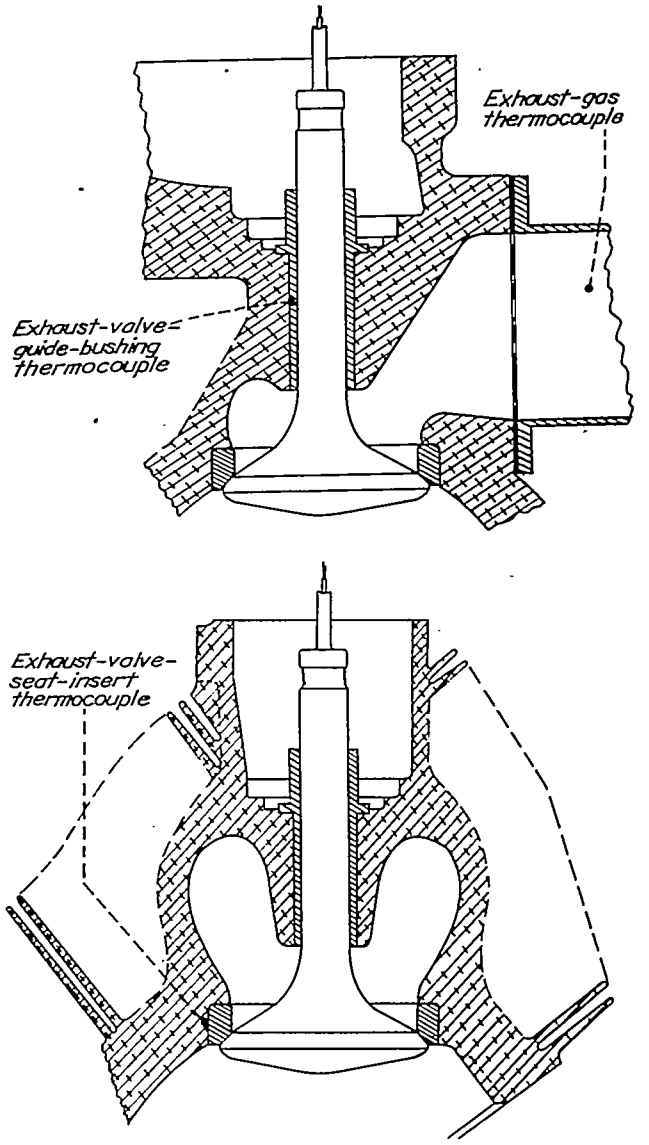


FIGURE 6.—Locations of thermocouples for measuring temperatures of exhaust-valve-guide bushing, seat, and exhaust gas.

## RESULTS AND DISCUSSION

### THE EFFECT OF OPERATING CONDITIONS ON EXHAUST-VALVE TEMPERATURES

The influence of indicated mean effective pressure on the temperatures of the exhaust gas, the exhaust valve, the valve guide, the valve seat, and the rear-spark-plug bushing is shown in figure 7 (a). For example, the exhaust-valve temperature was increased from 990° to 1220° F by increasing the indicated mean effective pressure from 98 to 254 pounds per square inch.

Apparently the valve temperature at low speed is influenced by the frequency of the reciprocation of the sodium from the valve head to the stem. Figure 7 (b) shows that the valve temperature did not fall appreciably when the speed was reduced from 1800 to 1400 rpm at constant mean effective pressure. This result indicates that the effect of the change in power is partly offset by the reduced rate at which the heat is transferred by the sodium. Figure 7 (c), which presents the data of figures 7 (a) and 7 (b) on a power

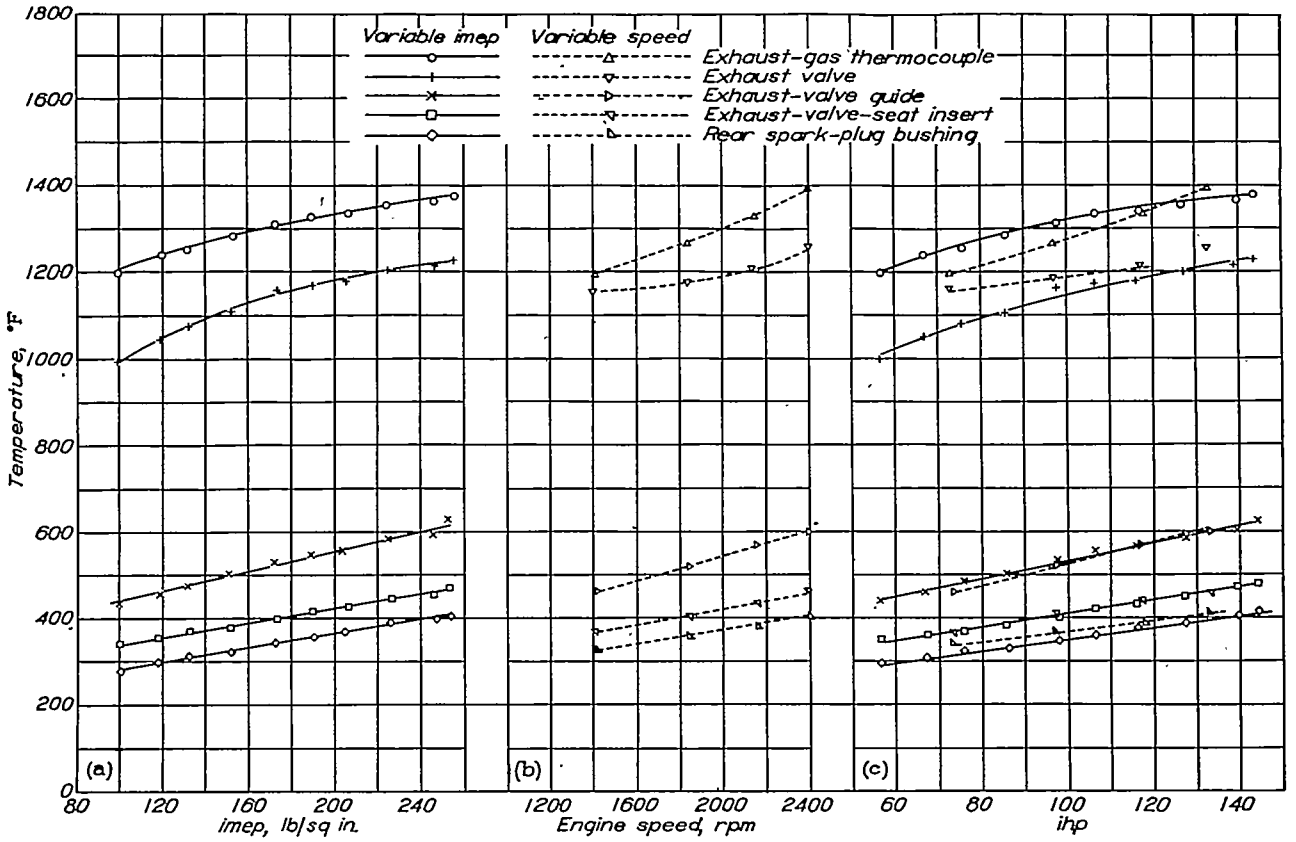


(a) Variable indicated mean effective pressure at 2200 rpm. (b) Variable speed with indicated mean effective pressure of 210 pounds per square inch. (c) Comparison of indicated mean effective pressure and speed, power basis.

FIGURE 7.—Influence of engine power on the temperature of the exhaust valve and associated parts in an air-cooled cylinder. Fuel-air ratio, 0.08; spark advance, 19° B. T. C.; cooling-air pressure drop, 16 inches of water; cooling-air temperature, 98° F.

basis, reveals that at 73 indicated horsepower the valve temperature was 1155° F at 1400 rpm and 1065° F at 2200 rpm, a reduction of 90° F resulting from the use of higher speed.

Variation in fuel-air ratio has a marked effect on valve temperatures, as may be seen in figure 8. Reducing the fuel-air ratio from 0.112 to 0.064 increased the temperature of the exhaust valve more than increasing the indicated mean effective pressure from 98 to 254 pounds per square inch, as shown in the following table:

| Variable-imep test | | | Variable-fuel-air-ratio test | | |
|---|---|---|---|---|---|
| F/A | imep, (lb/sq in.) | Valve temperature measured by thermocouple (°F) | F/A | imep, (lb/sq in.) | Valve temperature (° F) |
| 0.080 | 98 | 990 | 0.112 | 226 | 1070 |
| .080 | 254 | 1220 | .064 | 179 | 1337 |

The maximum valve temperature was obtained at a fuel-air ratio between 0.064 and 0.070. Both richer and leaner mixtures produced lower valve temperatures, though lean-mixture operation did not result in so low a valve temperature as did rich-mixture operation. The important temperatures were:

| Fuel-air ratio: | *Valve temperature* (° F) |
|---|---|
| 0.052 | 1200 |
| .066 | 1340 |
| .112 | 1070 |

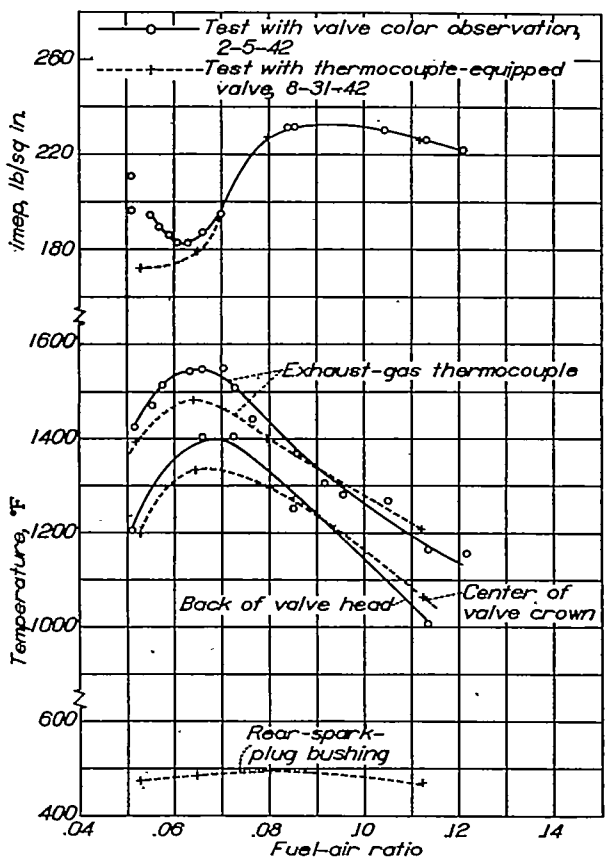


FIGURE 8.—Effect of fuel-air ratio on the temperature of the exhaust valve in an air-cooled cylinder. Engine speed, 2200 rpm; indicated mean effective pressure, approximately 93 percent of that occurring at the audible-knock limit; spark advance, 19° B. T. C.; compression ratio, 6.7; temperature of center of barrel downstream, 360° F.

The high valve temperature accompanying operation with fuel-air ratios in the region of 0.065 is one reason why lean-mixture operation is detrimental to valve life. Injection carburetors are frequently adjusted to give a fuel-air ratio of 0.070 for cruising. From the foregoing discussion it is evident that this mixture ratio imposes the most severe temperature on the exhaust valve. The valves would probably give more satisfactory service if operated with a leaner mixture.

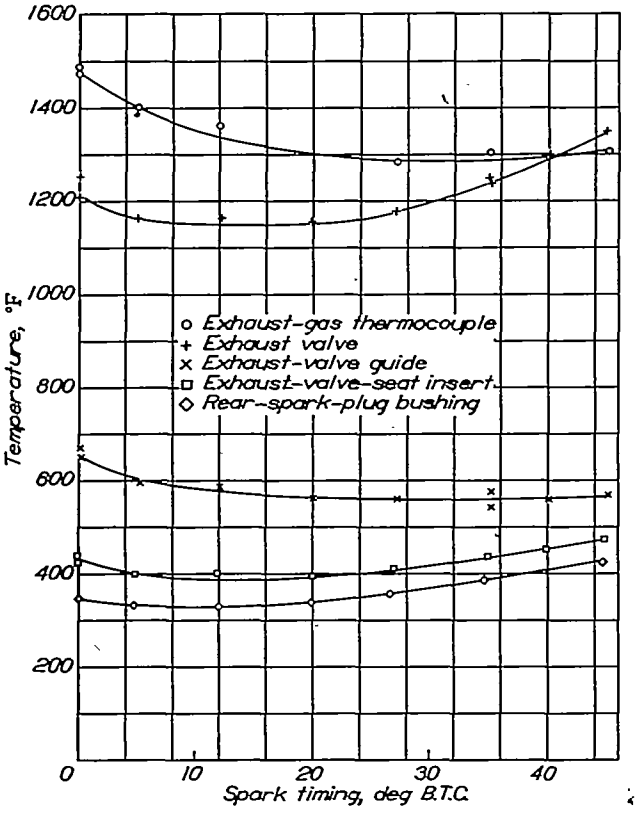


FIGURE 9.—Effect of variation in spark advance on the temperatures of the exhaust valve and associated parts in an air-cooled cylinder. Indicated mean effective pressure, 167 pounds per square inch; engine speed, 2200 rpm; fuel-air ratio, 0.08; charge-air temperature, 150° F; cooling-air temperature, 100° F; cooling-air pressure drop, 16 inches of water.

The effect of spark advance on exhaust-valve temperatures is shown in figure 9. This figure shows that at a fuel-air ratio of 0.08 the exhaust-valve temperature is practically unaffected by variation of the spark advance in the range from 5° to 25° B. T. C. As the spark was advanced beyond 25° B. T. C., the valve temperature increased until at 45° B. T. C. it was the highest observed in this cylinder, 1350° F.

The rise in valve temperature with greatly retarded spark is probably caused by the higher exhaust-gas temperature resulting from a decreased expansion after combustion. The rise in valve temperature with increase in spark advance beyond 25° B. T. C. may be caused by the increased period of time that the crown of the valve is exposed to the working fluid during combustion and expansion.

It is noted that as the spark is advanced beyond 25° B. T. C. the indicated temperature of the exhaust-gas thermocouple is substantially constant, whereas the indicated temperature of the exhaust valve rises until it becomes greater than the temperature of the exhaust-gas thermocouple. The fact that the temperature of the exhaust valve does become greater than the temperature of the exhaust-gas thermocouple is, however, of no particular significance because, as pointed out before, the true exhaust-gas temperature is greater than the temperature of the unshielded thermocouple.

Variation in cylinder cooling resulting from change in cooling-air pressure drop across the engine resulted in relatively little change in the exhaust-valve temperature, as

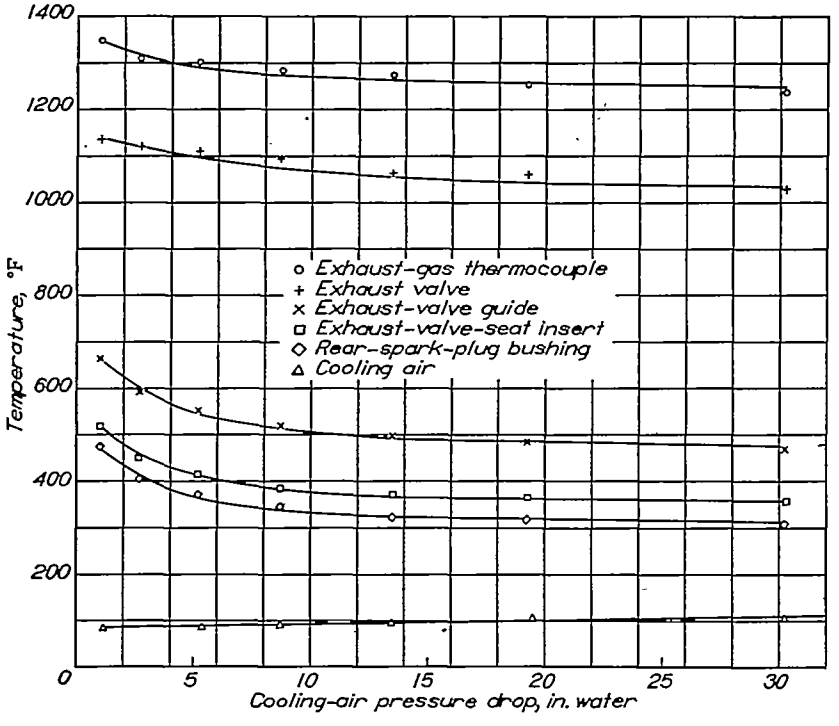


FIGURE 10.—Effect of variation in cooling-air pressure drop across the cylinder head on the temperatures of the exhaust valve and associated parts in an air-cooled cylinder. Indicated mean effective pressure, 130 pounds per square inch; engine speed, 2200 rpm; fuel-air ratio, 0.08; charge-air temperature, 150° F; spark advance, 19° B. T. C.

may be seen in figure 10. The temperatures of the rear-spark-plug bushing, valve-guide bushing, and seat insert were more greatly affected, as shown in the following tabulation:

| Cooling-air pressure drop, (in. water) | Rear-spark-plug-bushing temperature (° F) | Exhaust-valve temperature (° F) | Valve-guide temperature (° F) | Valve-seat temperature (° F) |
|---|---|---|---|---|
| 1<br>30 | 475<br>302 | 1140<br>1030 | 665<br>470 | 520<br>350 |
| Change | 173 | 110 | 195 | 170 |

In the ranges of the test conditions, variation in fuel-air ratio had much greater effect than cooling-air pressure drop on the exhaust-valve temperature. An increase in cooling-air pressure drop from 1 to 30 inches of water resulted in a reduction in exhaust-valve temperature of only 110° F, whereas an increase in fuel-air ratio from 0.065 to 0.112 reduced the valve temperature 280° F.

Reducing the fuel-air ratio from 0.112 to 0.098 increased the valve temperature as much as reducing the cooling-air pressure drop from 30 inches to 1 inch of water. This striking contrast shows that relatively large increases in over-all cylinder-head cooling are required to maintain constant valve temperature with moderate increases in severity of engine operation. Attention should be given to improvements in valve design and cylinder-head design to give the best heat flow from the valve guide and from the valve seat.

### TEMPERATURES OF EXHAUST VALVE AND REAR-SPARK-PLUG BUSHING

The temperature of the rear-spark-plug bushing is frequently taken as an indication of the condition of cylinder-head cooling. Endurance tests at high cylinder-head temperatures and high power indicate that the most critical cylinder-head temperature is that of the exhaust valve. A study was therefore made of the relation between the temperatures of the exhaust valve and the rear-spark-plug bushing.

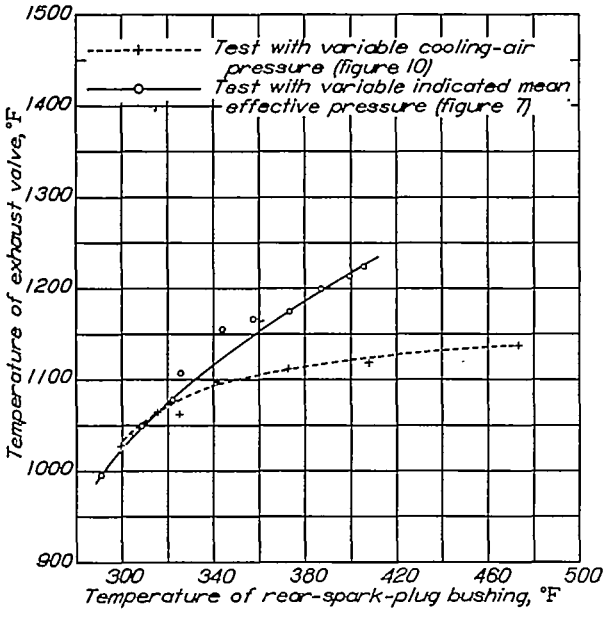


FIGURE 11.—Illustration of error in using the temperature of the rear-spark-plug bushing as an indication of the temperature of the exhaust valve. Air-cooled cylinder; engine speed, 2200 rpm; cooling-air temperature, 85°–109° F; fuel-air ratio, 0.08.

An inspection of the temperatures in figure 8 clearly reveals that the temperature of the rear-spark-plug bushing does not indicate variations in valve temperature. A variation in exhaust-valve temperature of 280° F was accompanied by practically no change in the temperature of the rear-spark-plug bushing.

Further evidence of the unreliability of the temperature of the rear-spark-plug bushing as an indication of the exhaust-valve temperature is found in figure 11. The curves show valve temperatures obtained at various spark-plug-bushing temperatures. Data from the tests with variable indicated mean effective pressure and tests with variable cooling-air pressure are shown. It is readily apparent that the relation between temperatures of the rear-spark-plug bushing and of the exhaust valve is sufficiently influenced by engine operating conditions to make use of such a relation inadvisable. At a rear-spark-plug-bushing temperature of 400° F, the difference in exhaust-valve temperature obtained in the two tests was 95° F.

### TEMPERATURES OF EXHAUST VALVE UNDER FLIGHT CONDITIONS

Sufficient data are presented in this report to make it possible to estimate exhaust-valve temperatures under flight conditions. The following estimates are given:

| Flight condition | Engine speed (rpm) | bmep (lb/sq in.) | Fuel-air ratio | Valve temperature (° F) |
|---|---|---|---|---|
| Take-off | 2500 | 209 | 0.10 | 1120 |
| Maximum cruising | 2000 | 141 | .08 | 1100 |
| Maximum cruising | 2000 | 141 | .07 | 1140 |

These estimated temperatures were obtained by applying corrections to the temperatures obtained in the test of variable indicated mean effective pressure (fig. 7 (a)). The required indicated mean effective pressure was found by adding a value of friction mean effective pressure of 25 pounds per square inch (an estimate based on single-cylinder operation) to the brake mean effective pressure. Corrections for differences in the required speed and a speed of 2200 rpm were then obtained from figure 7 (b) and corrections for the differences in required fuel-air ratio and a fuel-air ratio of 0.08 were obtained from figure 8. These corrections were applied to the temperatures read from figure 7 (a). The resultant temperatures have been listed as estimated temperatures.

Exhaust-valve temperatures for cruising with two fuel-air ratios are given. Normally the fuel-air ratio for maximum cruising power is 0.08, but cruising at 0.07 is sometimes practiced.

The preceding temperature estimates indicate that in this type of cylinder the exhaust valve is frequently hotter than 1000° F. It is probable that a temperature of 1300° F is sometimes reached in service.

### ACCURACY

Before the thermocouple was installed in the valve, the wires were calibrated by comparison with a standard thermocouple that had been calibrated at the National Bureau of Standards. After the valve was assembled, a standard thermocouple was attached to the outside of the valve crown

at its center and the valve was placed in a thermostatically controlled furnace. The stem and the commutator protruded through a hole in the furnace. Chromel and alumel wires were clamped to the commutator and connected to a potentiometer. The potentials produced by the valve thermocouple and the standard thermocouple were recorded at various furnace temperatures. The calibrations of the thermocouple before and after installation in the valve are shown in figure 12. The error at 1155° F was −4° F. The close agreement between the calibration of the thermocouple made before and after it was installed in the valve showed that the commutator was properly connected and had introduced no error in the indication of the thermocouple.

Electrical resistance at the contact surfaces of the commutator and the brushes introduced no error because the thermoelectromotive force was measured by a null-type potentiometer. Lubrication of the commutator with petroleum oil caused the formation of an insulating film between the commutator and the contacts during the periods in which the valve was moving. Contact was thus established only when little or no sliding of the contacts on the commutator occurred and the errors frequently introduced by potentials generated between sliding surfaces was minimized. Comparison of potential readings with the engine motoring and with the engine at rest showed the contact potential to be insignificant.

No special tests were run to determine the reproducibility of valve temperatures under similar operating conditions. It was, however, possible to check one test point from each test against corresponding test data from the test in which the indicated mean effective pressure was varied. The variations (all positive) between the results in each of the other tests and this test were:

| *Test* | *Variation* (° *F*) |
|---|---|
| Variable speed | 18 |
| Variable spark advance | 15 |
| Variable cooling | 10 |
| Variable fuel-air ratio | 22 |

These tests show a reproducibility within 22° F, which is 2 percent of the difference between room temperature and the measured valve temperature.

It is not known what influence the presence of the thermocouple and the tube had on the valve temperature. The valve chosen for these tests has a throat diameter as large as the upper limit of manufacturing tolerances and the presence of the thermocouple did not reduce the throat area below the equivalent throat area for the lower limit of manufacturing tolerances. The thermocouple tube reduced the smallest passage area for the sodium 10.2 percent and increased the wetted perimeter of that section 31.9 percent. The area of the valve-stem wall through which the sodium was cooled was unchanged.

The temperature determined by the unshielded exhaust-gas thermocouple was not the true gas temperature, but a useful indication of the heating effect of the gas upon engine parts is believed to have been provided. The temperature indicated by this thermocouple was lower than that of the exhaust gas because of cyclic variation in the temperature

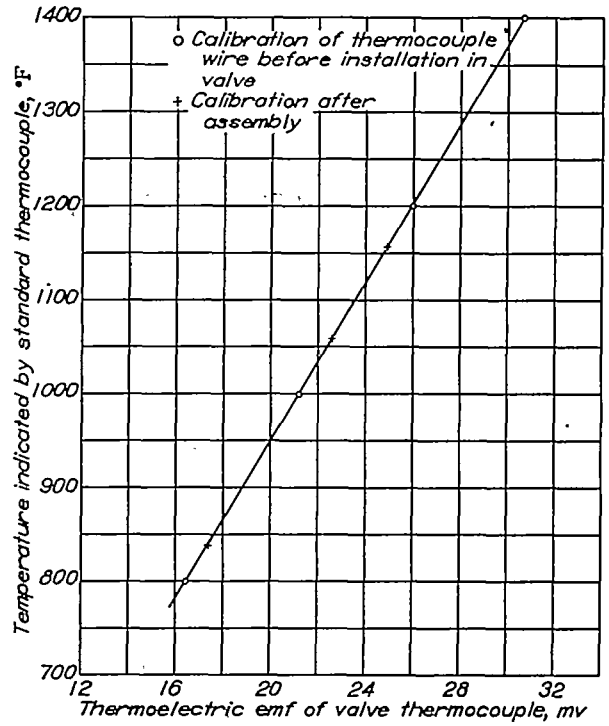


FIGURE 12.—Calibration of thermocouple installed in exhaust valve.

of the gas and because of radiation and conduction of heat from the thermocouple junction.

The temperatures determined by the thermocouples installed in the exhaust-valve-guide bushing, the rear-spark-plug bushing, and the exhaust-valve seat insert were accurate to within ±4° F. It has been found in these and in other tests that, with a given cylinder and thermocouple installation, the operating conditions could be repeated closely enough to make temperatures reproducible within ±10°F. With a different cylinder, or even a new installation of thermocouples in the same cylinder, greater variations were observed.

## CONCLUSIONS

The trends of exhaust-valve temperatures obtained in laboratory tests on an air-cooled cylinder showed that:

1. The temperature of the crown of the exhaust valve was 1337° F at the following conditions: fuel-air ratio, 0.064; indicated mean effective pressure, 179 pounds per square inch; engine speed, 2000 rpm; and spark advance, 19° B. T. C. This was the highest temperature observed in the normal range of spark advance.

2. Variation in fuel-air ratio had relatively great effect on valve temperature. The valve temperature changed from a maximum of 1337° F at a fuel-air ratio of 0.064 to 1065° F at a fuel-air ratio of 0.112. Operation with fuel-air ratios lower than 0.064 also resulted in valve temperatures appreciably below the maximum.

3. An increase in power resulted in an increase in the temperature of the exhaust valve. An increase in indicated mean effective pressure from 98 to 254 pounds per square inch increased the valve temperature from 990° to 1220° F. Changes in power resulting from changes in speed had slightly less influence on the valve temperature.

4. An extreme change in cooling-air pressure drop from 1

to 30 inches of water had less effect on the temperature of the exhaust valve than did variations in other operating conditions.

5. Variation of spark advance in the range from 5° to 25° B. T. C. had little effect on the temperature of the exhaust valve.

6. The temperature of the rear-spark-plug bushing is not a satisfactory indication of the temperature of the exhaust valve.

Aircraft Engine Research Laboratory,
National Advisory Committee for Aeronautics,
Cleveland, Ohio, *December 1, 1943.*

## REFERENCES

1. Heron, S. D., Harder, O. E., and Nestor, M. R.: Exhaust Valve Materials for Internal-Combustion Engines. A. S. T. M. Symposium on New Materials in Transportation, March 6, 1940, pp. 1–26.
2. Hatfield, W. H.: Heat-Resisting Steels. Engineering, vol. 145, no. 3768, April 1, 1938, pp. 372–374; and vol. 145, no. 3771, April 22, 1938, pp. 455–457.
3. Munger, Maurice, Wilsted, H. D., and Mulcahy, B. A.: The Effect of Valve Cooling upon Maximum Permissible Engine Output as Limited by Knock. NACA TN No. 861, 1942.
4. Banks, F. R.: Ethyl. Some Information on the Use and Advantages Gained by the Employment of Tetraethyl Lead in Fuels for Aviation Engines. R. A. S. Jour., vol. XXXVIII, no. 280, April 1934, pp. 309–360.
5. Colwell, A. T.: The Problem of Valve-Stem and Valve-Head Deposits. SAE Jour., vol. 47, no. 3, Sept. 1940, pp. 358–366.
6. Young, Vincent C.: Aircraft-Engine Valve Mechanisms. SAE Jour., vol. 44, no. 3, March 1939, pp. 109–116.
7. Colwell, A. T.: Modern Aircraft Valves. SAE Jour., vol. 46, no. 4, April 1940, pp. 147–165.

TITLE: Operating Temperatures of a Sodium-cooled Exhaust Valve as Measured by a Thermocouple

AUTHOR(S): Sanders, J. C.; Wilsted, H. D.; and others

ORIGINATING AGENCY: National Advisory Committee for Aeronautics, Washington, D. C.

PUBLISHED BY: Same

ATI- 7167

REVISION: none

ORIG. AGENCY NO.: ARR-3L06

PUBLISHING AGENCY NO.:

| DATE | DOC. CLASS. | COUNTRY | LANGUAGE | PAGES | ILLUSTRATIONS |
|---|---|---|---|---|---|
| Dec '43 | Unclass. | U.S. | Eng. | 26 | photos, tables, diagrs, graphs |

ABSTRACT:

Frequent failures of sodium-cooled exhaust valves caused by corroded heads were observed during cylinder cooling research. Tests were conducted using sodium-cooled, water-cooled, and oil-cooled valves. Results were compared. Sodium valves were ruined, but both oil-cooled and water-cooled valves were in satisfactory condition at completion of tests. Water-cooled valve was operated for 6.5 hrs without coolant circulation. Low fuel-air ratios or increases in power or IMEP raise valve temperatures.

DISTRIBUTION: Request copies of this report only from Originating Agency

DIVISION: Power Plants, Reciprocating (6)

SECTION: Exhaust System (5)

SUBJECT HEADINGS: Valves, Exhaust (96210)

ATI SHEET NO.: R-6-5-5

TITLE: Operating Temperatures of a Sodium-Cooled Exhaust Valve as Measured by a Thermocouple

AUTHOR(S): Sanders, J. C.; Wilsted, H. D.; Mulcahy, B. A.
ORIGINATING AGENCY: Aircraft Engine Research Lab., Cleveland, O.

PUBLISHED BY: National Advisory Committee for Aeronautics, Washington, D. C.

ATI- 34497
REVISION (None)
ORIG. AGENCY NO. R-754
PUBLISHING AGENCY NO. (Same)

| DATE | DOC. CLASS. | COUNTRY | LANGUAGE | PAGES | ILLUSTRATIONS |
|---|---|---|---|---|---|
| 1943 | Unclass. | U.S. | Eng. | 13 | photos, tables, diagrs, graphs |

ABSTRACT:
A thermocouple was installed in the crown of a sodium-cooled exhaust valve and tested in an air-cooled engine cylinder to determine valve temperatures under various engine operating conditions. The highest temperature of the crown of the exhaust valve was 1337°F at fuel/air ratio 0.064, indicated mean effective pressure, 179 lb/sq in., engine speed, 2000 rpm and spark advance, 19° BTC. Variation in fuel/air ratio had a relatively great effect on valve temperature, but cooling-air pressure and variation in spark advance had little effect. An increase in engine power by change of speed or mean effective pressure increased the valve temperature. It was found that the temperature of the rear-spark-plug bushing was not a satisfactory indication of the temperature of the exhaust valve.

DISTRIBUTION: Request copies of this report only from Publishing Agency

DIVISION: Power Plants, Reciprocating (6) 27
SECTION: Exhaust System (5) 1,4

SUBJECT HEADINGS:
Valves, Exhaust - Operating characteristics (96220); Engines, Reciprocating - Components (34076.39)

ATI SHEET NO.: R-6-5-9