TECHNICAL MEMORANDUMS

NATIONAL ADVISORY COMMITTEE FOR AERONAUTICS

No. 1030

THE COMPRESSIBLE POTENTIAL FLOW PAST ELLIPTIC SYMMETRICAL CYLINDERS AT ZERO ANGLE OF ATTACK AND WITH NO CIRCULATION

By W. Hantzsche and H. Wendt

Luftfahrtforschung
Vol. 18, No. 9, September 20, 1941
Verlag von R. Oldenbourg, München und Berlin

Washington
October 1942

NASA Technical Library
3 1176 01440 4959

NATIONAL ADVISORY COMMITTEE FOR AERONAUTICS

TECHNICAL MEMORANDUM NO. 1030

THE COMPRESSIBLE POTENTIAL FLOW PAST ELLIPTIC SYMMETRICAL CYLINDERS AT ZERO ANGLE OF ATTACK AND WITH NO CIRCULATION*

By W. Hantzsche and H. Wendt

For the tunnel corrections of compressible flows those profiles are of interest for which at least the second approximation of the Janzen-Rayleigh method can be applied in closed form. One such case is presented by certain ellipsoidal symmetrical cylinders located in the center of a tunnel with fixed walls and whose maximum velocity, incompressible, is twice the velocity of flow. In the numerical solution the maximum velocity at the profile and the tunnel wall as well as the entry of sonic velocity is computed.

The velocity distribution past the contour and in the minimum cross section at various Mach numbers is illustrated on a worked out-example.

INTRODUCTION

The method of Janzen (reference 1) and Rayleigh (reference 2) for the step-by-step calculation of subsonic compressible potential flow from the incompressible flow was in original form applied only to flow past the circular profile and to the sphere in free air. Poggi modified the solution of the boundary value problem for two-dimensional flows so as to make the method equally applicable to other simple profiles (reference 3). The mathematical task is largely confined to the determination of the velocity or pressure distribution on the profile. For the solution of the second step (development of the potential to the quadratic term of the Mach number), Imai

*"Die kompressible Potentialströmung um eine Schar von nichtangestellten symmetrischen Zylindern im Kanal." Luftfahrtforschung, vol. 18, no. 9, Sept. 20, 1941, pp. 311-316.

and Aihari (reference 4) have indicated a method by introducing the variables z and $\bar{z}$ instead of x and y previously employed by Busemann (reference 5) in his treatment of the incompressible flow, which enables the obtainment of the potential in the entire field even for more complicated cases. By way of application Imai and Aihari calculated the flow past an ellipse in free air. In ~~contrast to~~ comparison with Kaplan's calculation patterned after Poggi (reference 6) for the ellipse at zero angle of attack and with no circulation, which requires the series, the solution can be given in closed form.

For flows in the tunnel only the second approximation about an almost circular contour by E. Lamla (reference 7) is available. He used the method of Janzen and Rayleigh, with the incompressible flow produced by superposition of a parallel flow with a doublet and its reflections at the tunnel walls as first approximation.

The present report deals with the second step for the incompressible flow about a group of ellipsoidal cylinders in the tunnel. The profile curves are denoted by circles after conformal transformation of the strip bounded by two parallels, mapped on a plane sectionalized along a semistraight line. In incompressible flow the cylinders have for each thickness ratio $\left(\frac{\text{thickness}}{\text{chord}}\right)$ double the flow velocity as maximum velocity. The differential equation is integrated according to Imai and Aihari.

I. DIFFERENTIAL EQUATION OF THE FLOW

The potential Φ (x, y) of a stationary, nonrotational two-dimensional compressible flow satisfies the differential equation of the second order:

$$\Phi_{xx}\left(1 - \frac{u^2}{a^2}\right) - 2\Phi_{xy}\frac{uv}{a^2} + \Phi_{yy}\left(1 - \frac{v^2}{a^2}\right) = 0 \qquad (1)$$

where $u = \Phi_x$, $v = \Phi_y$ indicate, respectively, the components of the velocity along the x- and y-axis of a rectangular system of coordinates x,y and a the sonic velocity. This is a function of u,v; with a_∞ as sonic velocity and U as the flow velocity at infinity we get

$$a^2 = a^2_\infty - \frac{\kappa - 1}{2}\left(u^2 + v^2 - U^2\right) \tag{2}$$

Equation (1) can be written in the form

$$\Phi_{xx} + \Phi_{yy} = \frac{1}{a^2}\left[\Phi_{xx}\Phi_x{}^2 + 2\Phi_x\Phi_y\Phi_{xy} + \Phi_{yy}\Phi_y{}^2\right] \tag{3}$$

Envisaging the potential developed along the Mach number $M = \frac{U}{a_\infty}$

$$\Phi = \Phi_0 + \Phi_1 M^2 + \cdot \cdot \cdot$$

equation (3) affords differential equations of the form

$$\Delta\Phi_0 = 0 \tag{4}$$

$$\Delta\Phi_1 = \frac{1}{U^2}\left\{(\Phi_0)_{xx}(\Phi_0)_x{}^2 + 2(\Phi_0)_x(\Phi_0)_y(\Phi_0)_{xy} + (\Phi_0)_{yy}(\Phi_0)_y{}^2\right\} \tag{5}$$

Φ_0 is the potential in incompressible flow; the determination of Φ_1 represents the second step of the Janzen-Rayleigh method of approximation. As potential of an incompressible flow Φ_0 is the real part of an analytical function of $z = x + iy$: $\Phi_0 = \underline{\mathrm{Re}}\, f(z) = \frac{f(z) + \overline{f(z)}}{2}$, if $\overline{f(z)}$ is the conjugate complex value of $f(z)$.

With

$$(\Phi_0)_x = \underline{\mathrm{Re}}\,\frac{df}{dz} = \frac{1}{2}\left[\frac{df}{dz} + \overline{\frac{df}{dz}}\right]$$

$$(\Phi_0)_y = -\,\underline{\mathrm{Jm}}\,\frac{df}{dz} = \frac{1}{2i}\left[-\frac{df}{dz} + \overline{\frac{df}{dz}}\right]$$

$$(\Phi_0)_{xx} = \underline{\mathrm{Re}}\,\frac{d^2f}{dz^2} = \frac{1}{2}\left[\frac{d^2f}{dz^2} + \overline{\frac{d^2f}{dz^2}}\right]$$

$$(\Phi_0)_{xy} = -\,\underline{\mathrm{Jm}}\,\frac{d^2f}{dz^2} = \frac{1}{2i}\left[-\frac{d^2f}{dz^2} + \overline{\frac{d^2f}{dz^2}}\right]$$

$$(\Phi_0)_{yy} = -\,\underline{\mathrm{Re}}\,\frac{d^2f}{dz^2} = -\frac{1}{2}\left[\frac{d^2f}{dz^2} + \overline{\frac{d^2f}{dz^2}}\right]$$

the right-hand side of equation (5) can be formed to read:

$$\frac{1}{2U^2}\left\{\frac{d^2f}{dz^2}\overline{\left(\frac{df}{dz}\right)^2} + \overline{\frac{d^2f}{dz^2}}\left(\frac{df}{dz}\right)^2\right\}$$

The equation for Φ_1 assumes the form

$$\Delta\Phi_1 = \frac{1}{U^2}\,\underline{\mathrm{Re}}\left\{\overline{\frac{d^2f}{dz^2}\left(\frac{df}{dz}\right)^2}\right\} \tag{6}$$

Introducing the complex variables $z = x + iy$ and $\bar{z} = x - iy$ in place of x and y it can be transformed with $\frac{\partial}{\partial x} = \frac{\partial}{\partial z} + \frac{\partial}{\partial \bar{z}}$ and $\frac{\partial}{\partial y} = i\left(\frac{\partial}{\partial z} - \frac{\partial}{\partial \bar{z}}\right)$ to

$$\frac{\partial^2\Phi_1}{\partial z\partial\bar{z}} = \frac{1}{4U^2}\,\underline{\mathrm{Re}}\left\{\overline{\frac{d^2f}{dz^2}\left(\frac{df}{dz}\right)^2}\right\}$$

the integral of which can be indicated

$$\Phi_1 = \frac{1}{4U^2}\,\underline{\mathrm{Re}}\left\{\overline{\frac{df}{dz}}\int\left(\frac{df}{dz}\right)^2 dz + F(z) + G(\bar{z})\right\} \tag{7}$$

The analytical functions $F(z)$ and $G(\bar{z})$ are arbitrary, pending determination by the boundary conditions.

The formal use of z and $\bar{z}$ as independent variables still requires justification.

The conjugate complex value $\overline{f(z)}$ of the analytical function $f(z)$ is no longer an analytical function of z, while $\overline{f(z)}$ is obviously analytical in $\bar{z}$. To express this we write

$$\overline{f(z)} = \bar{f}(\bar{z}) \tag{8}$$

Since $\overline{dz} = d\bar{z}$, the derivatives of $\bar{f}$ with respect to $\bar{z}$ become

$$\overline{\frac{df(z)}{dz}} = \frac{d\overline{f}(\overline{z})}{d\overline{z}}; \quad \overline{\frac{d^2f(z)}{dz}} = \frac{d^2\overline{f}(\overline{z})}{d\overline{z}} \tag{9}$$

whence equation (6) can be written

$$\Delta\Phi_1 = \frac{1}{2U^2}\left[\frac{d^2\overline{f}(\overline{z})}{d\overline{z}^2}\left(\frac{df}{dz}\right)^2 + \frac{d^2f}{dz^2}\left(\frac{d\overline{f}(\overline{z})}{d\overline{z}}\right)^2\right] \tag{10}$$

Permitting the independent variables x and y to assume temporarily any complex values $x_1 + ix_2$ and $y_1 + iy_2$, then $f(z)$, $\overline{f}(\overline{z})$ and Φ ostensibly become analytical functions of the two complex variables x and y. Then the substitution of the independent variables

$$z_1 = x + iy$$

$$\text{and} \quad z_2 = x - iy$$

for x and y changes equation (10) to

$$\frac{\partial^2\Phi_1}{\partial z_1 \partial z_2} = \frac{1}{8U^2}\left[\frac{d^2\overline{f}(z_2)}{dz_2{}^2}\left(\frac{df(z_1)}{dz_1}\right)^2 + \frac{d^2f(z_1)}{dz_1{}^2}\left(\frac{d\overline{f}(z_2)}{dz_2}\right)^2\right]$$

So for Φ_1 we get

$$\Phi_1 = \frac{1}{8U^2}\left[\frac{d\overline{f}(z_2)}{dz_2}\int\left(\frac{df(z_1)}{dz_1}\right)^2 dz_1\right.$$

$$\left. + \frac{df(z_1)}{dz_1}\int\left(\frac{d\overline{f}(z_2)}{dz_2}\right)^2 dz_2 + 2F\,(z_1) + 2G\,(z_2)\right] \tag{11}$$

with $F\,(z_1)$ and $G\,(z_2)$ indicating the analytical functions of z_1 and z_2, respectively. Again limited to real x and y affords $z_1 = z$ and $z_2 = \overline{z}$. Taking moreover the real part of equation (11) so as to secure a real solution of equation (6), the final expression (equation (7)) with due account of equations (8) and (9) reads:

$$\Phi_1 = \frac{1}{4U^2}\,\underline{\mathrm{Re}}\left\{\overline{\frac{df(z)}{dz}}\int\left(\frac{df}{dz}\right)^2 dz + F\,(z) + G\,(\overline{z})\right\}$$

If the potential is referred to the complex coordinates ζ and $\overline{\zeta}$ of a ζ-plane tied to the xy-plane by the conformal transformation $\zeta = \zeta(z)$, then Φ_1 assumes the form

$$\Phi_1 = \frac{1}{4U^2} \underline{\mathrm{Re}} \left\{ \overline{\frac{df}{d\zeta}} \, \overline{\frac{d\zeta}{dz}} \int \left(\frac{df}{d\zeta}\right)^2 \frac{d\zeta}{dz} \, d\zeta + F_1(\zeta) + G_1(\overline{\zeta}) \right\} \tag{12}$$

Conformal transformation is usually resorted to for reasons of easier compliance with the boundary condition that the derivation of Φ_1 normal to the profile contour should disappear.

The differential equation for the second term of the stream function in the development along the Mach number can be transformed in analogous manner.

The stream function $\psi(x,y)$ of a two-dimensional stationary nonrotational compressible flow meets the differential equation

$$\psi_{xx} \left(1 - \frac{u^2}{a^2}\right) - 2\psi_{xy} \frac{uv}{a^2} + \psi_{yy} \left(1 - \frac{v^2}{a^2}\right) = 0 \tag{13}$$

with $u\rho = \rho_\infty \psi_y$ and $v\rho = -\rho_\infty \psi_x$ the components of the stream density.

With $\psi = \psi_0 + \psi_1 M^2 + \ldots$ (ψ_0 stream function of incompressible flow) equation (13) affords for ψ_1 the differential equation

$$\Delta\psi_1 = (\psi_0)_{xx} \frac{(\psi_0)_y^2}{U^2} - 2(\psi_0)_{xy} \frac{(\psi_0)_x(\psi_0)_y}{U^2} + (\psi_0)_{yy} \frac{(\psi_0)_x^2}{U^2}$$

whence the introduction of $z = x + iy$ and $\overline{z} = x - iy$, if $\psi_0 = \underline{\mathrm{Jm}}\, f(z)$, gives

$$(\psi_1)_{z\overline{z}} = -\frac{1}{4U^2} \underline{\mathrm{Jm}} \left\{ \frac{d^2\overline{f}(\overline{z})}{d\overline{z}^2} \left(\frac{df(z)}{dz}\right)^2 \right\}$$

or

$$\psi_1 = -\frac{1}{4U^2}\,\underline{Jm}\left\{\overline{\frac{df(z)}{dz}}\int\left(\frac{df(z)}{dz}\right)^2 dz + F_2(z) + G_2(\bar{z})\right\} \quad (14)$$

A comparison of equation (7) and equation (14) shows that the complex functions occurring at Φ_1 and ψ_1 behind the sign $\underline{Re}$ and $\underline{Jm}$ differ only in the terms added by the boundary conditions.

II. INCOMPRESSIBLE FLOW IN THE TUNNEL

We proceed from an arbitrary symmetrical profile at zero angle of attack placed in the center of a channel with fixed walls. The flow of the entire plane obtained by reflection at the tunnel walls is referred to a system of rectangular cartesian coordinates x, y, the x-axis of which is located at tunnel center. The tunnel height can be chosen equal to 2π without limitation of generality. If $z = x + iy$ again indicates the complex coordinate in the xy-plane, the complex potential of the flow is an analytical function $f(z)$, which at infinity acts as Uz (U = flow velocity) and otherwise has singularities only on the inside of the profile; $f(z)$ is a simple periodic function with the period $2\pi i$. Then the transformation $\zeta' = e^z$ maps the z-plane into the complex $\zeta' = \xi' + i\eta'$-plane and each strip parallel to the x-axis of width 2π covers the entire plane. Considering the strip $-\pi \leqq y \leqq \pi$ in particular, we find the tunnel walls $y = -\pi$ and $y = \pi$ changing to the twice traversed negative ξ'-axis. The line of symmetry of the tunnel becomes the positive ξ'-axis, the symmetrical profile changes to one symmetrical to the ξ'-axis. The infinitely remote point of the z-plane is reflected in the zero point and infinitely remote point of the ζ'-plane. From the behavior of $f(z)$ for $z = \infty$ it follows that in the vicinity of $\zeta' = 0$ and $\zeta' = \infty$, $f(\zeta')$ acts as $U \ln \zeta'$. Aside from these two points the function has no singular points outside of the profiles; $f(\zeta')$ is therefore the potential of the flow in the ζ'-plane produced by a source with the yield $2\pi U$ in the zero point. The profile and the ζ'-axis are streamlines.

Concentrating on the group of profile contours in the tunnel which the transformation $\zeta' = e^z$ maps into circles, the complex potential $f(\zeta')$ is readily

indicated by reflection on the circle*

$$f(\zeta') = U \ln \frac{\zeta'(\zeta' - b + c)}{\zeta' - b} \tag{15}$$

if b is the center abscissa of the circle of radius a and $c = \frac{a^2}{b}$.

The family of profile curves in the tunnel is shown in figure 1 a.

These profile curves are symmetrical with the median line of the tunnel and at right angle to it, as is readily seen from figure 1 b conformable to the chord-tangent theorem. The highest point of a profile curve in the ζ'-plane is given by the contact point of the tangent placed on the circle from the origin of the coordinates. Obviously the same profile curve is obtained for values of a and b with constant ratio $\frac{a}{b}$ up to a parallel displacement along the tunnel axis. Thus keeping the center distance b fixed while varying the radius a from zero to b affords the whole group; the position shown in figure 1 a then is obtained by parallel shifting of the individual curves. The relationship of displacement ratio to thickness ratio of the profile curves is indicated in figure 2. The maximum velocity follows from

$$\frac{df}{dz} = \frac{df}{d\zeta'} \frac{d\zeta'}{dz} = \frac{df}{d\zeta'} \zeta'$$

for the contact point of the tangents

$$\zeta' = \sqrt{b^2 - a^2}\left\{\frac{\sqrt{b^2 - a^2}}{b} + i \frac{a}{b}\right\}$$

---

*To find the flow represented by $f(\zeta')$ if the profile in the ζ'-plane is not yet a circle, the outer zone of the profile would have to be mapped onto the outer zone of a circle of a complex z'-plane. Of the conformal transformation it is demanded that it be symmetrical to the ζ'-axis, that is, the ζ'-axis becomes the x'-axis and the infinitely remote point of the ζ'-plane is mapped in that of the z'-plane. Then the flow in the z'-plane again becomes the flow of a source about a circle.

with allowance for equation (15) at

$$\frac{df}{dz} = u - i\,v = 2\,U$$

hence the maximum velocity is always twice the flow velocity, as is readily understood for the two extreme cases $a \rightarrow 0$ (sphere in free air) and $a \rightarrow b$ (very long plate of thickness $\frac{h}{2}$ in tunnel of height h).

III. COMPRESSIBLE FLOW IN THE TUNNEL

In the following the circular plane is referred to a coordinate system $\zeta = \zeta' - b$ through the center of the circle.

Then the complex potential (equation (15)) has the form

$$f(\zeta) = U \ln \frac{(\zeta + b)\,(\zeta + c)}{\zeta} \tag{16}$$

whence the incompressible velocity potential

$$\Phi_0 = \underline{\mathrm{Re}}\; f(\zeta) = \underline{\mathrm{Re}}\; U \ln \frac{(\zeta + b)\,(\zeta + c)}{\zeta} \tag{17}$$

The additional potential Φ_1 is according to equation (12)

$$\begin{aligned}\frac{1}{U}\,\Phi_1 = \frac{1}{4}\,\underline{\mathrm{Re}}\Bigg\{ & -\frac{bd \ln \zeta}{\bar{\zeta}} + \frac{b^2}{\zeta\bar{\zeta}} - \frac{b \ln (\zeta + b)}{\bar{\zeta}} \\ & + bd \ln \frac{\zeta + c}{\bar{\zeta}} + \frac{b(b - c)}{\bar{\zeta}(\zeta + c)} - \frac{b(b - c)}{\zeta(\bar{\zeta} + c)} \\ & + \frac{(b - c)d}{\bar{\zeta} + c} \ln \zeta + \frac{(b - c) \ln (\zeta + b)}{\bar{\zeta} + c} \\ & - \frac{(b - c)\, d \ln (\zeta + c)}{\bar{\zeta} + c} - \frac{(b - c)^2}{(\zeta + c)\,(\bar{\zeta} + c)} \\ & + F_1\,(\zeta) + G_1\,(\bar{\zeta})\Bigg\}\end{aligned} \tag{18}$$

with $d = -1 - \frac{2b^2}{a^2}$

Because of the conformal transformation of the z-plane into the ζ-plane ($\zeta = r\,e^{i\varphi}$) the boundary conditions in the ζ-plane can be easily indicated.

1. The disappearance of the normal component of the velocity on the profile of the xy-plane stipulates that the derivation of Φ_1 normal to the circle $r = a$ in the ζ-plane be zero:

$$\left(\frac{\partial \Phi_1}{\partial r}\right)_{r=a} = 0$$

2. The tunnel walls must be streamlines, hence the derivation $\frac{\partial \Phi_1}{\partial \varphi}$ on their corresponding part of the negative ξ-axis must disappear:

$$\left(\frac{\partial \Phi_1}{\partial \varphi}\right)_{\substack{\xi<-b \\ \eta=0}} = 0$$

3. The additional velocity at infinity must become zero in the plane of the tunnel. In point $\zeta = -b$ and $\zeta = \infty$ the expressions

$$\frac{\partial \Phi_1}{\partial x} = \frac{\partial \Phi_1}{\partial \xi}\,\underline{\mathrm{Re}}\,(\zeta + b) + \frac{\partial \Phi_1}{\partial \eta}\,\underline{\mathrm{Jm}}\,(\zeta + b)$$

and

$$\frac{\partial \Phi_1}{\partial y} = -\frac{\partial \Phi_1}{\partial \xi}\,\underline{\mathrm{Jm}}\,(\zeta + b) + \frac{\partial \Phi_1}{\partial \eta}\,\underline{\mathrm{Re}}\,(\zeta + b)$$

must therefore disappear.

4. As the flow is to be without circulation, the derivative $\frac{\partial \Phi_1}{\partial \varphi}$ for $\zeta = \pm a$ must become zero:

$$\left(\frac{\partial \Phi_1}{\partial \varphi}\right)_{\substack{\xi=a\\ \eta=0}}=0; \quad \left(\frac{\partial \Phi_1}{\partial \varphi}\right)_{\substack{\xi=-a\\ \eta=0}}=0.$$

The functions $F_1(\zeta)$ and $G_1(\bar{\zeta})$ should be so defined that $\Phi_1(\zeta)$ complies with the conditions 1, 2, 3, and 4, and that the velocity field in the xy-plane has no singularities outside of the profile at finity

It then affords for Φ_1

The procedure of establishing $F_1(\zeta)$ and $G_1(\bar{\zeta})$ is given elsewhere. The existent integrals are ~~indeterminate~~ integrals, since a constant amounts to nothing at the potential. The integrations are easily carried out. They were omitted here because it makes the expressions more complicated and is moreover unnecessary for the prediction of the velocity field.

indefinite

$$\begin{aligned}
\frac{1}{U}\Phi_1=\frac{1}{4}\,\mathfrak{Re}\Bigg\{&-b\,d\left[\frac{\ln\zeta}{\bar{\zeta}}-\int\frac{d\bar{\zeta}}{\bar{\zeta}^2}+\int\frac{\ln\frac{a^2}{\bar{\zeta}}}{\bar{\zeta}^2}\,d\bar{\zeta}\right]\\
&+b^2\left[\frac{1}{\zeta\bar{\zeta}}+\frac{1}{a^2}\int\frac{d\zeta}{\zeta}+\frac{1}{a^2}\int\frac{d\bar{\zeta}}{\bar{\zeta}}\right]\\
&-b\left[\frac{\ln(\zeta+b)}{\bar{\zeta}}-a^2\int\frac{d\bar{\zeta}}{\bar{\zeta}^2(a^2+b\bar{\zeta})}+\int\frac{\ln\left(\frac{a^2}{\bar{\zeta}}+b\right)d\bar{\zeta}}{\bar{\zeta}^2}\right]\\
&+b\,d\left[\frac{\ln(\zeta+c)}{\bar{\zeta}}-a^2\int\frac{d\bar{\zeta}}{\bar{\zeta}^2(a^2+c\bar{\zeta})}+\int\frac{\ln\left(\frac{a^2}{\bar{\zeta}}+c\right)d\bar{\zeta}}{\bar{\zeta}^2}\right]\\
&+(b-c)\,d\left[\frac{\ln\zeta}{\bar{\zeta}+c}-\int\frac{d\bar{\zeta}}{\bar{\zeta}(\bar{\zeta}+c)}+\int\frac{\ln\frac{a^2}{\bar{\zeta}}\,d\bar{\zeta}}{(\bar{\zeta}+c)^2}\right]\\
&+(b-c)\left[\frac{\ln(\zeta+b)}{\bar{\zeta}+c}-a^2\int\frac{d\bar{\zeta}}{\bar{\zeta}(a^2+b\bar{\zeta})(\bar{\zeta}+c)}+\int\frac{\ln\left(\frac{a^2}{\bar{\zeta}}+b\right)}{(\bar{\zeta}+c)^2}\,d\bar{\zeta}\right]\\
&-(b-c)\,d\left[\frac{\ln(\zeta+c)}{\bar{\zeta}+c}-\int\frac{\zeta\,d\zeta}{(\zeta+c)(a^2+c\zeta)}+\int\frac{\ln\left(\frac{a^2}{\bar{\zeta}}+c\right)}{(\bar{\zeta}+c)^2}\,d\bar{\zeta}\right]\\
&-(b-c)^2\left[\frac{1}{(\zeta+c)(\bar{\zeta}+c)}+\int\frac{\zeta\,d\zeta}{(\zeta+c)^2(a^2+c\zeta)}+\int\frac{\bar{\zeta}\,d\bar{\zeta}}{(\bar{\zeta}+c)^2(a^2+c\bar{\zeta})}\right]\\
&-b(1-d)\left[\frac{\ln(\zeta+b)}{\zeta}-\frac{\bar{\zeta}+b}{a^2}\ln b-\int\frac{d\bar{\zeta}}{a^2+b\bar{\zeta}}+\int\frac{\ln\left(\frac{a^2}{\bar{\zeta}}+b\right)}{a^2}\,d\bar{\zeta}+\ln b\int\frac{d\zeta}{\zeta^2}\right]\\
&-(c-b)(1-d)\left[\frac{\ln(\zeta+b)}{\zeta+c}+\frac{a^2\ln\left(b-\frac{a^2}{b}\right)}{c(a^2+c\bar{\zeta})}-a^2\int\frac{d\bar{\zeta}}{(a^2+b\bar{\zeta})(a^2+c\bar{\zeta})}\right.\\
&\qquad\left.+a^2\int\frac{\ln\left(\frac{a^2}{\bar{\zeta}}+b\right)}{(a^2+c\bar{\zeta})^2}\,d\bar{\zeta}+\ln\left(b-\frac{a^2}{b}\right)\int\frac{d\zeta}{(\zeta+c)^2}\right]\\
&-\left(1+3\frac{b^2}{a^2}-2\frac{b^4}{a^4}\right)\left[\ln(\zeta+b)-\ln\zeta+\ln(\zeta+c)\right]\Bigg\}\qquad\text{(19)}
\end{aligned}$$

I

II

III

So far the boundary conditions 1 have been met without taking the others into account. This was carried out separately for each term on the right-hand side of equation (18). One term on the right-hand side has the form $\underline{\mathrm{Re}}\,(h(\zeta)\,k(\bar{\zeta}))$ and furnishes as constituent to the radial derivative $\frac{\partial \Phi_1}{\partial r}$ for $r = a$:

$$\underline{\mathrm{Re}}\left[\frac{dh}{d\zeta}\cdot k(\bar{\zeta})\,e^{i\varphi}+\frac{dk}{d\bar{\zeta}}\,h(\zeta)\,e^{-i\varphi}\right]_{r=a}$$

This term is now a real part of a function of $e^{i\varphi}$, say, $\underline{\mathrm{Re}}\,(g(e^{i\varphi}))$. Forming both expressions

$$-\underline{\mathrm{Re}}\left\{\int\frac{g\left(\frac{\zeta}{a}\right)}{\frac{\zeta}{a}}\,d\zeta\right\} \quad \text{and} \quad -\underline{\mathrm{Re}}\left\{\int\frac{g\left(\frac{a}{\bar{\zeta}}\right)}{\frac{\bar{\zeta}}{a}}\,d\bar{\zeta}\right\},$$

they patently have on circle $r = a$ the radial derivative: $-\underline{\mathrm{Re}}\,g\,(e^{i\varphi})$ precisely required for the compensation.

The choice of either function is, for the time being, open; a decision is usually arrived at because only one of the two functions satisfies the boundary conditions 2 at the same time. It therefore seemed advisable to treat the two additive components of $g\,(e^{i\varphi})$ differently on many terms.

By the present method of compliance with conditions 1 both the real and imaginary parts of function $g\,(e^{i\varphi})$ at the circle are compensated, which is not at all necessary.

The first eight lines of equation (19) indicate the proportion for the additive functions $F_1\,(\zeta)$ and $G_1\,(\bar{\zeta})$ for the individual terms of equation (18). The two underscored terms in equation (18) together are purely imaginary, hence may be omitted. These were included in equation (18) only because of the parallel to the stream function.

The second boundary condition $\left(\frac{\partial \Phi_1}{\partial \varphi}\right)_{\substack{\zeta<-b\\ \eta=0}} = 0$ is satisfied by all nonlogarithmic terms, because the expression below the sign $\underline{\mathrm{Re}}$ derivated with respect to φ becomes purely imaginary. Otherwise it may happen, for instance, at term $\frac{\ln\,(\zeta + b)}{\bar{\zeta}}$ (third line), that real proportions remain. To bring these to disappearance the two lines of equation (19) below boundary conditions 2 were necessary. The expressions are so chosen that conditions 1 are always complied with.

Lastly, the solution of the homogeneous equation in the last line has been given a suitable factor so that conditions 3 are also fulfilled; the conditions 4 are of themselves fulfilled.

The equations for the stream function corresponding to equations (18) and (19) are

$$\begin{aligned}\frac{1}{U}\Psi_1 = -\frac{1}{4}\,\underline{\mathrm{Im}}\Big\{&-\frac{b\,d\ln\zeta}{\bar{\zeta}}+\underline{\frac{b^2}{\zeta\bar{\zeta}}}-\frac{b\ln(\zeta+b)}{\bar{\zeta}}\\ &+\frac{b\,d\ln(\zeta+c)}{\bar{\zeta}}+\frac{b\,(b-c)}{\bar{\zeta}\,(\zeta+c)}\\ &-\frac{b\,(b-c)}{\zeta\,(\bar{\zeta}+c)}+\frac{(b-c)\,d}{\bar{\zeta}+c}\ln\zeta\\ &+\frac{(b-c)\ln(\zeta+b)}{\bar{\zeta}+c}-\frac{(b-c)\,d\ln(\zeta+c)}{\bar{\zeta}+c}\\ &-\underline{\frac{(b-c)^2}{(\zeta+c)\,(\bar{\zeta}+c)}}+F_2(\zeta)+G_2(\bar{\zeta})\Big\},\end{aligned}$$

with $d = -1 - 2\frac{b^2}{a^2}$ as before. The underlined terms are real, hence may be omitted.

$$\frac{1}{U}\Psi_1 = \frac{1}{4}\,\underline{\mathrm{Im}}\Bigg[b\,d\left\{\frac{\ln\zeta}{\bar\zeta} - \frac{\ln\frac{a^2}{\bar\zeta}}{\bar\zeta}\right\}$$

$$b\left\{\frac{\ln(\zeta+b)}{\bar\zeta} - \frac{\ln\left(\frac{a^2}{\bar\zeta}+b\right)}{\bar\zeta}\right\}$$

$$-b\,d\left\{\frac{\ln(\zeta+c)}{\bar\zeta} - \frac{\ln\left(\frac{a^2}{\bar\zeta}+c\right)}{\bar\zeta}\right\}$$

$$-2b(b-c)\left\{\frac{1}{\bar\zeta(\zeta+c)} - \frac{\zeta}{a^2(\zeta+c)}\right\}$$

$$-(b-c)\,d\left\{\frac{\ln\zeta}{\bar\zeta+c} - \frac{\ln\frac{a^2}{\bar\zeta}}{\bar\zeta+c}\right\}$$

$$-(b-c)\left\{\frac{\ln(\zeta+b)}{\bar\zeta+c} - \frac{\ln\left(\frac{a^2}{\bar\zeta}+b\right)}{\bar\zeta+c}\right\}$$

$$(b-c)\,d\left\{\frac{\ln(\zeta+c)}{\bar\zeta+c} - \frac{\ln\left(\frac{a^2}{\bar\zeta}+c\right)}{\bar\zeta+c}\right\}$$

$$-b(1-d)\left\{\frac{\ln(\zeta+b)}{\zeta} + \frac{\bar\zeta}{a^2}\ln b - \frac{\ln\left(\frac{a^2}{\bar\zeta}+b\right)}{a^2}\bar\zeta - \frac{\ln b}{\zeta}\right\}$$

$$-(c-b)(1-d)\left\{\frac{\ln(\zeta+b)}{\zeta+c} - \frac{a^2\ln\left(b-\frac{a^2}{b}\right)}{c(a^2+c\bar\zeta)} - \frac{\ln\left(\frac{a^2}{\bar\zeta}+b\right)}{\frac{a^2}{\bar\zeta}+c} + \frac{\ln\left(b-\frac{a^2}{b}\right)}{\zeta+c}\cdot\frac{\zeta}{c}\right\}\Bigg].$$

The boundary condition for $\psi = 0$ at the circle $r = a$ was complied with by deducting from each term the expression obtained if ζ or $\bar\zeta$ is replaced by $\frac{a^2}{\zeta}$ or $\frac{a^2}{\zeta}$, as reflected in the first seven lines of the formula for ψ_1, the last two being the remaining boundary conditions in order. If the procedure of the potential function had been followed, it would have largely afforded the same terms as these, except with a different prefix in some parts. The first term, for instance, is identical with the following:

$$b\,d\left[\frac{\ln\zeta}{\bar\zeta} + \int\frac{d\bar\zeta}{\bar\zeta^2} + \int\frac{\ln\frac{a^2}{\zeta}\,d\bar\zeta}{\bar\zeta^2}\right].$$

IV. NUMERICAL EVALUATION

The components of the velocity in the tunnel are:

$$\frac{u}{U} = \frac{\partial}{\partial x}\left(\frac{\Phi}{U} + M^2\frac{\Phi_1}{U}\right) = \underline{\mathrm{Re}}\left(1 + \frac{b-c}{\zeta+c} - \frac{b}{\zeta}\right) + \frac{M^2}{U}\frac{\partial\Phi_1}{\partial x}$$

$$\frac{v}{U} = \frac{\partial}{\partial y}\left(\frac{\Phi}{U} + M^2\frac{\Phi_1}{U}\right) = -\underline{\mathrm{Im}}\left(1 + \frac{b-c}{\zeta+c} - \frac{b}{\zeta}\right) + \frac{M^2}{U}\frac{\partial\Phi_1}{\partial y} \quad \ldots (20)$$

Only $\frac{u}{U}$ and $\frac{v}{U}$ at the profile edge are being indicated. To calculate the differential quotients $\frac{\partial\Phi_1}{\partial x}$ and $\frac{\partial\Phi_1}{\partial y}$ we proceed to the polar coordinates r, φ of the circular plane and note that at the profile

$$\left(\frac{\partial\Phi_1}{\partial r}\right)_{r=a} = 0:$$

$$\left(\frac{\partial\Phi_1}{\partial x}\right)_{r=a} = \left(\frac{\partial\Phi_1}{\partial\varphi}\right)_{r=a}\cdot\left(\frac{\partial\varphi}{\partial x}\right)_{r=a}$$

$$\left(\frac{\partial\Phi_1}{\partial y}\right)_{r=a} = \left(\frac{\partial\Phi_1}{\partial\varphi}\right)_{r=a}\cdot\left(\frac{\partial\varphi}{\partial y}\right)_{r=a}$$

For $\left(\frac{\partial\varphi}{\partial x}\right)_{r=a}$ and $\left(\frac{\partial\varphi}{\partial y}\right)_{r=a}$ since $re^{i\varphi} + b = e^{x+iy}$: we have

$$\left(\frac{\partial\varphi}{\partial x}\right)_{r=a} = -\frac{b}{a}\sin\varphi; \qquad \left(\frac{\partial\varphi}{\partial y}\right)_{r=a} = 1 + \frac{b}{a}\cos\varphi.$$

$\left(\frac{\partial\Phi_1}{\partial\varphi}\right)_{r=a}$ according to (19) has the form:

$$\frac{1}{a}\cdot\frac{1}{U}\left(\frac{\partial\Phi_1}{\partial\varphi}\right)_{r=a}$$

$$= -\frac{1}{4}\,\underline{\mathrm{Re}}\Bigg[b\,d\frac{2i}{a\bar\zeta} + b\frac{2ie^{i\varphi}}{\bar\zeta(\zeta+b)} - b\,d\frac{2ie^{i\varphi}}{\bar\zeta(\zeta+c)}$$

$$-(b-c)\,d\frac{2i}{a(\bar\zeta+c)} - (b-c)\frac{2ie^{i\varphi}}{(\zeta+b)(\bar\zeta+c)}$$

$$+\left(1 + 3\frac{b^2}{a^2} - 2\frac{b^4}{a^4}\right)\frac{2ie^{i\varphi}}{\zeta+b}$$

$$b(1-d)\left\{\frac{2ie^{i\varphi}}{\zeta(\zeta+b)} + \frac{2i\ln b}{a^2}e^{-i\varphi} - \frac{2ie^{i\varphi}\ln(\zeta+b)}{\zeta^2}\right\}$$

$$(c-b)(1-d)\left\{\frac{2ie^{i\varphi}}{(\zeta+b)(\zeta+c)} - \frac{2ie^{i\varphi}\ln(\zeta+b)}{(\zeta+c)^2} + \frac{2ie^{i\varphi}\ln\left(b-\frac{a^2}{b}\right)}{(\zeta+c)^2}\right\}\Bigg]_{r=a}.$$

the maximum velocity at the profile in the tunnel is:

$$\frac{u_{max}}{U} = 2 + \beta M^2 \tag{21}$$

with

$$\beta = 1 + \left(1 + \frac{b^2}{a^2}\right)\left\{1 + \frac{b^2}{a^2}\left[-\frac{2a}{b}\sqrt{1 - \frac{a^2}{b^2}}\sin^{-1}\frac{a}{b} - \left(1 - \frac{a^2}{b^2}\right)\ln\left(1 - \frac{a^2}{b^2}\right)\right]\right\}$$

Figure 3 shows the parameter β plotted against the displacement ratio. For the case of the circle in free air $a \rightarrow 0$, $\frac{d}{h} = 0$, we get $\beta = \frac{7}{6}$, as it already must be the case according to Rayleigh's own calculated second approximation at the circle. For the other extreme $a \rightarrow b$, $\frac{d}{h} = 0.5$ (very long plate of thickness $\frac{h}{2}$ in tunnel of height h) we get $\beta = 3$. In this case the velocity between profile and wall is constant. It follows from the requirement that the stream density is twice as great as at infinity:

$$u\rho = 2U\rho_\infty$$

or

$$\frac{u}{U} = 2\frac{\rho_\infty}{\rho}$$

The expansion $\frac{\rho_\infty}{\rho}$ according to the Mach number $M = \frac{U}{a_\infty}$ gives

$$\frac{u}{U} = 2 + 3M^2 + \ldots$$

hence $\beta = 3$.

The second curve plotted in figure 3 indicates the value of β in the narrowest area on the tunnel wall, when putting:

$$\frac{u}{U} = \frac{u_{ik}}{U} + \beta M^2$$

where u_{ik} is the velocity at the wall in incompressible flow. In figure 4 the entry of sonic velocity on the profile (critical Mach number of flow) is plotted against the displacement ratio. The critical Mach number is obtained from equation (21) by putting $\frac{u_{max}}{U} = \frac{a^*}{U}$ (a^* = critical velocity).

Figures 5 and 6 show the velocity distributions on the profile and in the narrowest part of the tunnel plotted against the Mach number of the flow. The profile 3 of figure 1a with thickness ratio $\frac{d}{t} = 0.761$ and displacement ratio $\frac{d}{h} = 0.356$, was chosen as cylinder.

Translation by J. Vanier,
National Advisory Committee
for Aeronautics

REFERENCES

1. Janzen, O.: Beitrag zu einer Theorie der stationären Strömung kompressibler Flüssigkeiten. Phys. Z., Bd. 14, 1913, pp. 639-643.

2. Rayleigh, Lord: On the Flow of Compressible Fluid Past an Obstacle. Phil. Mag. (6), Bd. 32, 1916, pp. 1-6.

3. Poggi, L.: Campo di velocitá in una corrente piana di fluido compressibile. L'Aerotecnica, Bd. 12, 1932, p. 1579; Bd. 14, 1934, p. 532.

4. Imai, I., and Aihari: On the Subsonic Flow of a Compressible Fluid Past an Elliptic Cylinder. Rep. No. 194 (vol. XV, 8), Aero. Res. Inst., Tokio Imperial Univ., Aug. 1940, p. 185.

5. Busemann, A.: in A. Föppl, Vorlesungen über Technische Mechanik, Bd. IV. Dynamik, 1933, p. 383.

6. Kaplan, C.: Two-Dimensional Subsonic Compressible Flow Past Elliptic Cylinders. Rep. No. 624, NACA, 1938.

7. Lamla, Ernst: On the Symmetrical Potential Flow of Compressible Fluid Past a Circular Cylinder in the Tunnel in the Subcritical Zone. T.M. No. 1018, NACA, 1942.

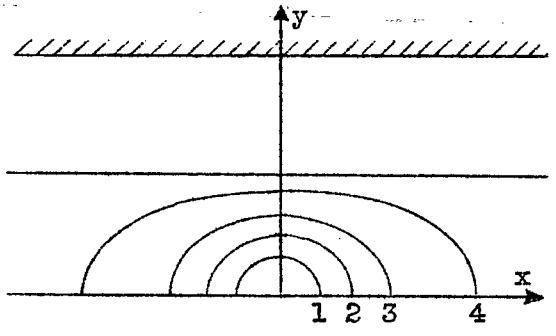

Figure 1a.- Group of cylinders explored in tunnel, whose maximum velocity is twice that of the approaching stream.

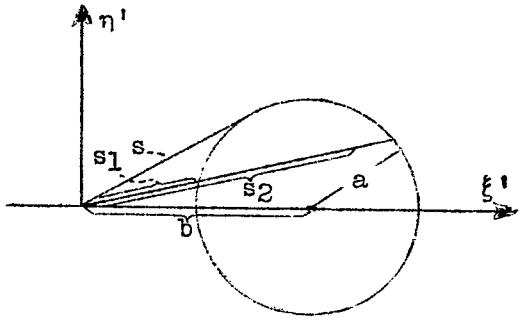

Figure 1b.- ξ', η' plane.

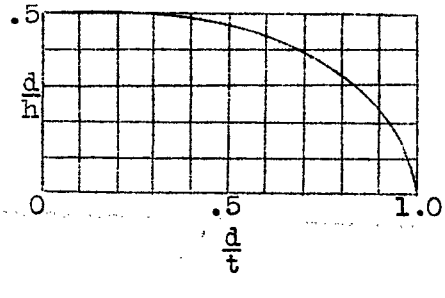

Figure 2.- The displacement against thickness.
d profile thickness
t profile chord
h tunnel height

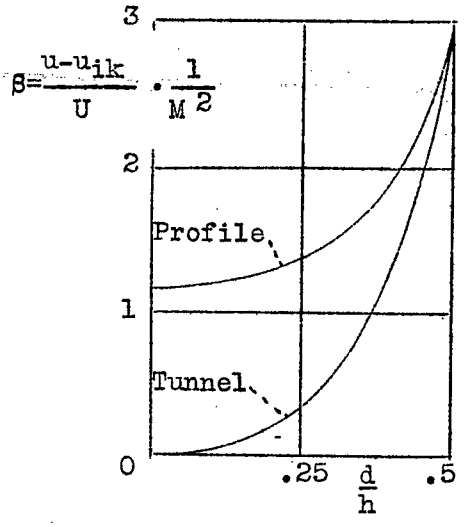

Figure 3.- Effect of compressibility on the additional velocity at profile and tunnel wall.

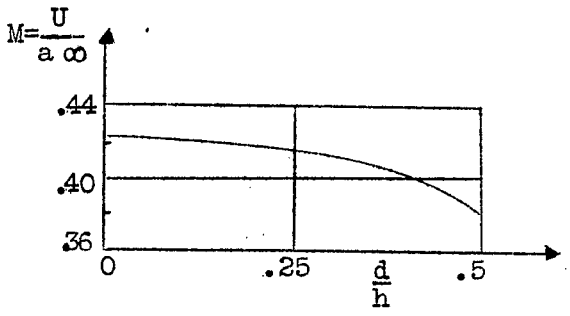

Figure 4.- Critical Mach number.

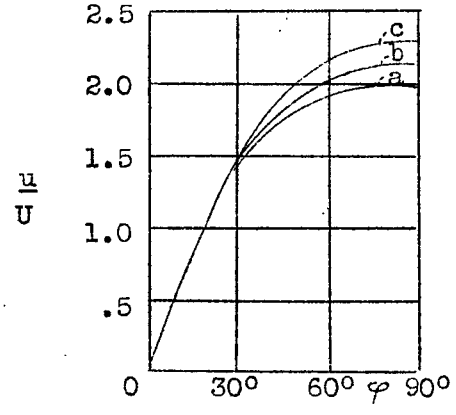

Figure 5.- Velocity distribution along profile of thickness ratio $\frac{d}{t}=0.761$ $(\frac{d}{h}=0.356)$ plotted against polar angle.

Curve a: Mach number $M=\frac{U}{a_\infty}=0$

Curve b: Mach number $M=\frac{U}{a_\infty}=0.3$

Curve c: Mach number $M=\frac{U}{a_\infty}=0.407$

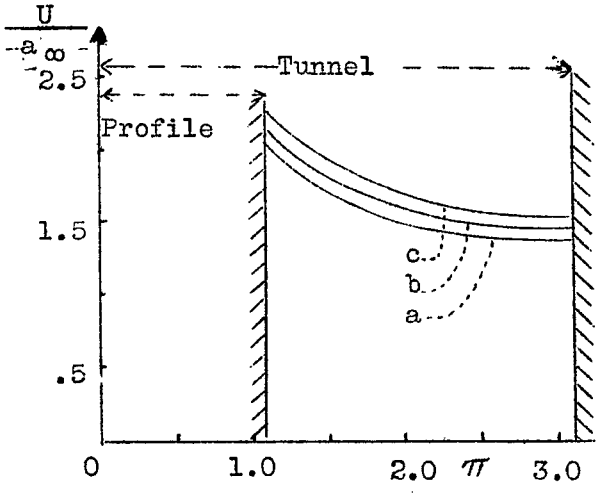

Figure 6.- Velocity distribution in the minimum section for profile with thickness ratio $\frac{d}{t}=0.761$ $(\frac{d}{h}=0.356)$.

Curve a: Mach number $M=\frac{U}{a_\infty}=0$

Curve b: Mach number $M=\frac{U}{a_\infty}=0.3$

Curve c: Mach number $M=\frac{U}{a_\infty}=0.407$

TITLE: The Compressible Potential Flow past Elliptic Symmetrical Cylinders at Zero Angle of Attack and with No Circulation

AUTHOR(S): Hantzsche, W.; Wendt, H.

ORIGINATING AGENCY: (Not known)

PUBLISHED BY: Luftfahrtforschung

ATI-42305

REVISION (None)

ORIG. AGENCY NO. (None)

PUBLISHING AGENCY NO. Vol. 18, No. 9 Sept *

U

DATE	DOC. CLASS.	COUNTRY	LANGUAGE	PAGES	ILLUSTRATIONS
Sept '41	Unclass.	Germany	German	6	(None)

FOREIGN TITLE: Die kompressible Potentialstroemung um eine Schar von nichtangestellten symmetrischen Zylindern im Kanal

TRANSLATION BY: National Advisory Committee for Aeronautics, Washington, D.C. Oct '42

ABSTRACT:

A group of profiles is investigated, which are of interest for the wind tunnel corrections of compressible flows and which allow application of - at least - the second approximation of the Janzen-Rayleigh method in closed form. The profiles in question are ellipsoidal symmetrical cylinders, located in the center of a tunnel with fixed walls, which have - in incompressible flow - for each thickness ratio double the flow velocity as maximum velocity. In the numerical solution, the maximum velocity at the profile and the tunnel wall as well as the entry of sonic velocity is computed.

*20, 1941, pp 311-316

DISTRIBUTION: Request copies of this report only from Translating Agency

DIVISION: Aerodynamics (2)

SECTION: Fluid Mechanics and Aerodynamic Theory (9)

Div 9, Sect 4

ATI SHEET NO.: R-2-9-76

SUBJECT HEADINGS: Flow, Two-dimensional - Compressible (41354); Wings - Aerodynamics (99150)