L-443

NATIONAL ADVISORY COMMITTEE FOR AERONAUTICS

WARTIME REPORT

ORIGINALLY ISSUED
June 1941 as
Advance Restricted Report

AN ANALYTICAL STUDY OF WING AND TAIL LOADS ASSOCIATED WITH AN ELEVATOR DEFLECTION

By H. A. Pearson and J. B. Garvin

Langley Memorial Aeronautical Laboratory
Langley Field, Va.

CASE FILE
COPY

NACA

WASHINGTON

NACA WARTIME REPORTS are reprints of papers originally issued to provide rapid distribution of advance research results to an authorized group requiring them for the war effort. They were previously held under a security status but are now unclassified. Some of these reports were not technically edited. All have been reproduced without change in order to expedite general distribution.

L-443

AN ANALYTICAL STUDY OF WING AND TAIL LOADS ASSOCIATED WITH AN ELEVATOR DEFLECTION

By H. A. Pearson and J. B. Garvin

SUMMARY

The equations relating the wing and tail loads are derived for the type of control movement that proceeds at a constant rate to a maximum value and thereafter remains constant. These equations are then used to compute the variation with time of the wing and tail loads for the BT-9B airplane; each of the important parameters is varied in turn in the computations. Equations are derived for the determination of the maximum increments of the wing load, the down-tail load, and the up-tail load following a given elevator displacement.

For a given elevator displacement, the results indicate that the greater the rate of elevator movement the greater is the down-tail load and that a rearward shift of the center of gravity causes an increase in both the wing load and the upward-acting tail load.

INTRODUCTION

The opinion has often been expressed that the design load requirements of tail surfaces do not have the same rational basis as the requirements for other important parts of the airplane. It is felt that the requirements, in the case of the horizontal tail surfaces, should not only take into account the geometric and the aerodynamic properties of the surfaces but should also have some intimate relationship with the wing design load factor.

In order to achieve this relationship, it is necessary to determine both the wing load that accompanies a given elevator deflection and the maximum effective angle of attack that occurs at the tail surface when both linear velocities and angular velocities are combined. Therefore, a rational determination of the tail load must somehow take into account not only the stability characteristics of the airplane but also the manner in which the pilot actually moves the controls.

As early as 1921, Case and Gates (reference 1) had investigated the problem of determining the tail load from a rational basis and, although their paper included a series of design charts, they concluded that the number of factors upon which the maximum tail load depended was too large for any simple general formula to be given and that it was impossible to correlate the maximum tail load with the subsequent maximum wing load. Since that time, a number of related papers (references 2 to 8) have appeared; these papers have correlated the wing load with the stick force (see reference 2) or with the tail load. In most of the papers, either insufficient results are given for determining the effect of a wide variation in the rate of elevator movement on the tail load (see references 4 and 5) or elevator displacement functions have been so chosen (see references 6 and 8) that the rate of movement is variable along the path. For these functions it is impossible to isolate the effect of elevator movement on the tail load.

A consideration of the problem of determining the maneuvering tail loads for various types of airplane indicates that a desirable approach would be:

1. Determine the variables that, from theoretical considerations, appear to be the most important in determining the tail load.

2. Having determined these variables, find by experiments conducted on an actual airplane, the parameters of which are accurately known, the effect of each variable in turn on the tail load.

3. Obtain statistical data regarding actual amounts and rates of elevator deflections at various air speeds for various airplane types.

The present paper covers step 1 of the outlined investigation, includes methods of computing the variation of wing and tail loads, and gives numerical results of the application of the theory to the BT-9B airplane. Finally, theoretical formulas are developed and charts are given for computing the maximum increments of wing load, the down-tail load, and the up-tail load following a given elevator displacement.

L-143

SYMBOLS

The following is a list of the symbols employed in this paper:

W	airplane weight, pounds
S	wing area, square feet
S_t	tail area, square feet
b	wing span, feet
g	acceleration of gravity, feet per second per second
m	airplane mass (W/g), slugs
k_Y	radius of gyration of airplane, feet
I	pitching moment of inertia (mk_Y^2), slug-feet^2
x_t	tail distance from center of gravity of airplane to aerodynamic center of tail, feet
V	airplane velocity, feet per second
ρ	mass density of air, slugs per cubic foot
q	dynamic pressure $(1/2\,\rho\,V^2)$, pounds per square foot
η_t	tail efficiency factor (q_t/q)
L	lift, pounds
C_L	lift coefficient
C_m	pitching-moment coefficient of airplane less horizontal tail
α	wing angle of attack, radians
α_t	tail angle of attack, radians
i_t	angle of setting of tail surface, radians
δ	elevator angle, radians
ϵ	downwash angle, radians

γ flight-path angle with horizontal, radians

θ angle of pitch $(\alpha+\gamma)$, radians

K empirical constant denoting ratio of damping moment of complete airplane to damping moment of tail alone

n airplane load factor

t time, seconds

With subscript 1, t indicates time of maximum elevator deflection; with prime (′), t indicates a particular time. The notations $\dot{\alpha}$ and $\ddot{\alpha}$, $\dot{\theta}$ and $\ddot{\theta}$, $\dot{\gamma}$ and $\ddot{\gamma}$ denote single and double differentiations with respect to time.

K_1, K_2, K_3 constants occurring in basic differential equation

a, b roots of basic differential equation

A, B constants of integration in solution of differential equation

F_0, F_1, F_2, F_3 empirical factors used in determining maximum values of angles

Subscripts:

o initial value
max maximum value
d down load
l_0 zero lift
geo geometric
t tail

THEORETICAL RELATIONS BETWEEN WING AND TAIL LOAD

The mathematical treatment of the longitudinal motion of an airplane following an elevator movement involves three simultaneous nonlinear differential equations. The correct solution of these equations must be obtained either by series substitution or step-by-step methods. A close

L-445

approximation to the correct solution can be obtained if it is assumed that, in the interval between the start of a pull-up and the attainment of maximum loads on the wing and the tail surfaces, neither the initial velocity nor the initial attitude changes materially. These assumptions, which eliminate one of the three equations of motion and the trigonometric coefficients in the other two equations, afford a considerable saving in labor when a large number of cases are to be investigated. In addition, the assumptions agree qualitatively with experimental flight results and have been generally used in treating longitudinal motion of an airplane following a control deflection.

The following method, which mainly employs well-known results, might conceivably be useful at that stage of the design where numerical values of the load are required but where results of model tests are unavailable. Under such conditions most of the aerodynamic parameters of the airplane that enter into the problem must be determined from other sources. Some of these parameters can be determined with a high degree of accuracy; whereas others, notably the downwash factor, the tail efficiency factor, and the slope of the pitching-moment curve, cannot be obtained with the same accuracy.

If the sign conventions of figure 1 are used, the following equations apply to the steady-flight condition:

$$W \cos \gamma_o - \frac{dC_L}{d\alpha} \alpha_o q S = 0 \tag{1}$$

$$C_m q \frac{S^2}{b} + \frac{dC_{L_t}}{d\alpha_t}\left[\alpha_o\left(1 - \frac{d\epsilon}{d\alpha}\right) + i_t + \frac{d\alpha_t}{d\delta}\delta_o\right](\eta_t q) S_t x_t = 0 \tag{2}$$

Equation (1) represents the summation of the forces perpendicular to the instantaneous flight path and equation (2) represents the moments about the center of gravity.

In accordance with the assumption that there is no loss in speed during the pull-up, the corresponding dynamic equations can be written as

$$W \cos (\gamma_o + \Delta \gamma) - \frac{dC_L}{d\alpha} (\alpha_o + \Delta \alpha) q S + m \dot{\gamma} V = 0 \tag{3}$$

$$\left(C_m+\frac{dC_m}{d\alpha}\Delta\alpha\right)q\frac{S^2}{b}+\frac{dC_{L_t}}{d\alpha_t}\left[(\alpha_o+\Delta\alpha)\left(1-\frac{d\epsilon}{d\alpha}\right)-\frac{\dot{\alpha}x_t}{V}\frac{d\epsilon}{d\alpha}-\frac{\dot{\theta}x_t}{V}\frac{K}{\sqrt{\eta_t}}+i_t\right.$$

$$\left.+\frac{d\alpha_t}{d\delta}(\delta_o+\Delta\delta)\right](\eta_t q)S_t x_t-mk_Y^2\ddot{\theta}=0 \quad (4)$$

The term containing $\dot{\alpha}$ is introduced to correct for the effect of lag in downwash at the tail, and the term containing $\dot{\theta}$ is introduced to account for the change in tail angle due to rotation.

If equations (1) and (2) are subtracted from equations (3) and (4) and if it is assumed that only a small change in attitude takes place (so that $\cos(\gamma_o+\Delta\gamma)\cong\cos\gamma$), the following equations of motion are obtained:

$$m\dot{\gamma}V-\frac{dC_L}{d\alpha}\Delta\alpha\ qS=0 \quad (5)$$

$$\frac{dC_m}{d\alpha}\Delta\alpha q\frac{S^2}{b}+\frac{dC_{L_t}}{d\alpha_t}\left[\Delta\alpha\left(1-\frac{d\epsilon}{d\alpha}\right)-\dot{\alpha}\frac{x_t}{V}\frac{d\epsilon}{d\alpha}-\dot{\theta}\frac{x_t}{V}\frac{K}{\sqrt{\eta_t}}+\frac{d\alpha_t}{d\delta}\Delta\delta\right](\eta_t q)S_t x_t$$

$$-mk_Y^2\ddot{\theta}=0 \quad (6)$$

From figure 1 the following relations are seen to exist

$$\left.\begin{aligned}\theta&=(\alpha_o+\Delta\alpha)+(\gamma_o+\Delta\gamma)\\ \dot{\theta}&=\dot{\alpha}+\dot{\gamma}\\ \ddot{\theta}&=\ddot{\alpha}+\ddot{\gamma}\end{aligned}\right\} \quad (7)$$

Thus, from equations (5) and (7)

$$\dot{\gamma}=\dot{\theta}-\dot{\alpha}=\frac{dC_L}{d\alpha}\Delta\alpha q\frac{S}{mV} \quad (8)$$

and

$$\ddot{\gamma}=\ddot{\theta}-\ddot{\alpha}=\frac{dC_L}{d\alpha}\dot{\alpha}q\frac{S}{mV} \quad (9)$$

If equations (8) and (9) are substituted into equation (6), the terms containing $\ddot{\alpha}$, $\dot{\alpha}$, $\Delta\alpha$, and $\Delta\delta$ are segregated; and, if the resulting equation is divided by $-mk_Y^2=-I$, there is obtained

$$\ddot{\alpha} + \dot{\alpha}\left[\frac{dC_{L_t}}{d\alpha_t}\frac{S_t x_t^2}{2I}\rho\eta_t V\left(\frac{K}{\sqrt{\eta_t}} + \frac{d\epsilon}{d\alpha}\right) + \frac{dC_L}{d\alpha}\frac{\rho}{2}V\frac{S}{m}\right]$$

$$- \Delta\alpha\left[\frac{dC_m}{d\alpha}q\frac{S^2}{Ib} + \frac{dC_{L_t}}{d\alpha_t}(\eta_t q)\frac{S_t x_t}{I}\left(1 - \frac{d\epsilon}{d\alpha} - \frac{dC_L}{d\alpha}\frac{K}{\sqrt{\eta_t}}\frac{\rho}{2}\frac{Sx_t}{m}\right)\right]$$

$$= \Delta\delta\left[\frac{dC_{L_t}}{d\delta}(\eta_t q)\frac{S_t x_t}{I}\right] \tag{10}$$

For simplicity, equation (10) is written as

$$\ddot{\alpha} + K_1\dot{\alpha} + K_2\Delta\alpha = K_3\Delta\delta \tag{11}$$

which is the equation for a damped oscillation with an impressed force where

$$\left.\begin{aligned}
K_1 &= \frac{\rho V}{2m}\left[\frac{dC_{L_t}}{d\alpha_t}\frac{S_t x_t^2}{k_Y^2}\eta_t\left(\frac{K}{\sqrt{\eta_t}} + \frac{d\epsilon}{d\alpha}\right) + \frac{dC_L}{d\alpha}S\right] \\
K_2 &= -\frac{\rho V^2}{2m}\left\{\frac{dC_m}{d\alpha}\frac{S^2}{k_Y^2 b} + \frac{dC_{L_t}}{d\alpha_t}\eta_t\frac{S_t x_t}{k_Y^2}\left[\left(1 - \frac{d\epsilon}{d\alpha}\right) - \frac{dC_L}{d\alpha}\frac{K}{\sqrt{\eta_t}}\frac{\rho}{2}\frac{Sx_t}{m}\right]\right\} \\
K_3 &= \frac{\rho V^2}{2m}\left[\frac{dC_{L_t}}{d\delta}\eta_t\frac{S_t x_t}{k_Y^2}\right]
\end{aligned}\right\} \tag{11a}$$

It may be noted here that, when derivatives are considered, it is immaterial whether α or $\Delta\alpha$ is used. Because most of the results will be given as increments of angles, the rotation $\Delta\alpha$ and $\Delta\delta$ will be retained except where derivatives are used. If, in equation (11), $\Delta\delta$ is expressed as a function of t and, in particular, if it is assumed that the elevator displacement curve is composed of a constant gradient up to a value of $\Delta\delta_{max}$ occurring at time t_1 and thereafter is held at a constant value, the following conditions for determining the constants of integration exist.

In the first interval between $t = 0$ and $t = t_1$, $\Delta\delta = \frac{t}{t_1}\Delta\delta_{max}$; and at $t = 0$, $\Delta\alpha = \dot{\alpha} = 0$.

In the second interval, where $t > t_1$ and $\Delta\delta = \Delta\delta_{max}$,

the conditions for determining the constants are that at $t = t_1$, $\Delta\alpha$, $\dot{\alpha}$, and $\Delta\delta$ are given by the values obtained from the first interval. When the roots of $\ddot{\alpha}+K_1\dot{\alpha}+K_2\Delta\alpha$ are complex, that is, of the form $a \pm ib$, as will be the case with airplanes that are longitudinally stable, the solution of the differential equation for the first interval $(t < t_1)$ is

$$\Delta\alpha=\frac{\delta_{max}K_3}{t_1K_2}\left\{e^{at}\left[\frac{K_1}{K_2}\cos bt - \frac{1}{b}\left(a\frac{K_1}{K_2}+1\right)\sin bt\right]+t-\frac{K_1}{K_2}\right\} \qquad (12)$$

If equation (12) is differentiated and simplified by introducing the equivalent values of K_1 and K_2, then

$$\dot{\alpha} = \frac{\delta_{max}K_3}{t\ K_2}\left[\left(1-e^{at}\cos bt + e^{at}\frac{a}{b}\sin bt\right)\right] \qquad (13)$$

In the second interval, where $t > t_1$ and $\Delta\delta = \Delta\delta_{max}$, the complete solution of equation (11) is

$$\Delta\alpha = e^{at}(A\cos bt + B\sin bt) + \frac{K_3\Delta\delta_{max}}{K_2} \qquad (14)$$

where A and B are constants of integration.

If equation (14) is differentiated,

$$\dot{\alpha} = e^{at}\left[(aA + bB)\cos bt + (aB - bA)\sin bt\right] \qquad (15)$$

If the values that apply at $t = t_1$ are assigned to $\Delta\alpha$ and $\dot{\alpha}$, equations (14) and (15) may be solved simultaneously for the numerical values of the constants of integration A and B, which are then inserted into the equations that apply for the second interval. Equations (12) and (14) enable a determination of the increment in wing angle of attack, while equations (13) and (15) give the rate of change of the angle of attack following the particular type of control displacement adopted. The increments of the wing load and the load factor are then found from the equations

$$\Delta L = \frac{dC_L}{d\alpha}\Delta\alpha qS \qquad (16a)$$

$$\Delta n = \frac{dC_L}{d\alpha}\frac{\Delta\alpha q}{W/S} \qquad (16b)$$

L-443

It is seen from the bracketed term in equation (6) that, in order to determine the effective tail angle of attack at any time, the pitching velocity and the rate of change of the wing angle of attack must first be known. If substitutions are made from equations (7) and (8) into this term, the increment in effective tail angle of attack at any time is

$$\Delta\alpha_t = \left[\Delta\alpha\left(1 - \frac{d\epsilon}{d\alpha} - \frac{dC_L}{d\alpha}\frac{\rho}{2}\frac{S}{m}\frac{x_t}{\sqrt{\eta_t}}\right) - \dot{\alpha}\frac{x_t}{V}\left(\frac{d\epsilon}{d\alpha} + \frac{1}{\sqrt{\eta_t}}\right) + \frac{d\alpha_t}{d\delta}\Delta\delta\right] \quad (17a)$$

The value of $\Delta\alpha_t$ given in equation (17a) is to be inserted in the equation

$$\Delta L_t = \frac{dC_{L_t}}{d\alpha_t}\Delta\alpha_t\,\eta_t q S_t \quad (17b)$$

to obtain the increment in tail load at any time.

The pitching angular velocity from equation (8) is seen to be

$$\dot{\theta} = \dot{\alpha} + \Delta\alpha\frac{dC_L}{d\alpha}\frac{\rho}{2}\frac{SV}{m} \quad (18)$$

Although equations (12) to (15) are solutions for a particular type of elevator movement, other analytical displacement functions that give somewhat simpler solutions are available. (See references 6 and 8.) In these simpler functions, however, the rate of movement varies along the displacement curve so that its effect on the tail load cannot be directly determined. The following equations are general, allow for all types of elevator movement, and are subject to the assumptions previously listed. They may be derived from a consideration of a succession of small increments of elevator impulse $\delta(t)dt$.

$$\Delta\alpha = \frac{K_3}{b}\int_0^{t'}\left\{e^{a(t'-t)}\sin b(t'-t)\,\delta(t)\right\}dt \quad (19)$$

$$\dot{\alpha} = \frac{K_3}{b}\int_0^{t'}\left\{[a\sin b(t'-t) + b\sin b(t'-t)]e^{a(t'-t)}\delta(t)\right\}dt \quad (20)$$

The evaluation of general equations (19) and (20) is most readily obtained by integrating curves of the values

appearing within the braces plotted against the quantity $t' - t$. Such an integration gives the value of $\Delta\alpha$ or $\dot{\alpha}$ at the time t'.

APPLICATION OF THE THEORY

Practical flight considerations indicate that certain quantities appearing in equations (11a) must be considered as variables with a given airplane. These quantities, not necessarily listed in the order of their importance, are as follows:

(1) Mass density of air ρ

(2) Airplane speed V

(3) Airplane mass m

(4) Pitching moment of inertia I $(=mk_Y^2)$

(5) Rate of elevator deflection $d\delta/dt$

(6) Increment of elevator deflection $\Delta\delta$

(7) Slope of the pitching-moment curve $dC_m/d\alpha$ (variation is due to changes in the center-of-gravity position)

(8) Slope of the lift curve $dC_L/d\alpha$ (variation is due to changes in the thrust component that contributes to the lift)

(9) Tail efficiency factor η_t (variation is due to changes in thrust condition)

(10) Downwash factor $d\epsilon/d\alpha$ (variation is due to changes in the thrust condition)

A number of calculations were made to determine the relative effects of each of these variables on the wing and tail loads for the BT-9B airplane. A drawing of this airplane is shown in figure 2. For all the cases considered, the pertinent parameters and their numerical values are listed in table I. The required aerodynamic parameters were available from unreported tests made in the full-scale wind tunnel and the other values listed were available by

measurement or were arbitrarily assigned. The range covered by these variables is the range that might be covered under actual flight conditions.

L-443

Figure 3 shows the computed changes from the steady-flight condition in the wing angle of attack, the effective tail angle of attack, and the angular velocity for cases 1, 2, and 3 of table I due to a 15° deflection of the elevator. The variables covered in this figure are the air speed and the rate of elevator deflection.

Figure 4 shows the effect of varying the altitude at two different dynamic pressures corresponding to indicated velocities at 125 and 150 miles per hour, with only the medium rate of elevator movement being used. Figures 5 through 10 show the results of varying the moment of inertia, the airplane mass, the slope of the lift curve, the downwash factor, the center-of-gravity position, and the tail efficiency factor. In figures 4 to 9, case 4 of table I was used as the basis for comparison; in figure 10, case 1 of table I was used.

In figure 3, it is seen that the maximum effective negative increment of tail angle of attack markedly increased with an increase in the rate of elevator deflection; whereas, for a given dynamic pressure, the maximum wing angle of attack remained almost unchanged with the rate of elevator movement. An increase in the air speed caused: (1) a decrease in the maximum negative value of the effective tail angle of attack and (2) a proportional increase in the maximum angular velocity. Because of this behavior, the maximum increment of load on the wing and the positive increment of load on the tail would be proportional to the dynamic pressure for a given rate and amount of elevator deflection, but the maximum negative increment in tail load would be slightly less than proportional to the initial dynamic pressure.

From figures 5, 6, and 7, it is seen that the assumed changes in the moment of inertia, the airplane mass, and the slope of the lift curve, respectively, caused only slight additional changes in the wing and the effective tail angles of attack and only slight additional changes in the angular velocities. A more marked effect is apparent in figures 4, 8, 9, and 10, where the altitude, the downwash factor, the center-of-gravity position, and the tail efficiency factor, respectively, were varied. It must be remembered, however, that the changes apparent from these

figures do not necessarily represent the relative importance of each of the variables because the percentages of changes considered were not equal but were taken as the changes that might be obtained in the contemplated flight tests.

Table II presents the percentage of change in the maximum wing load and in the maximum positive and negative tail load for interpolated 1-percent changes in each of the variables, case 4 being used as the standard of comparison. Although this table summarizes the quantitative effect of slight changes in each variable from case 4 of table I, these changes must be taken as qualitative for other flight conditions of the BT-9B airplane and for other airplanes.

Before conclusions as to the relative importance of the variables are drawn from an inspection of table II, it must be recognized that certain variables may be more accurately obtainable than others. For this reason, those variables that are less accurately known, such as the downwash factor and the tail efficiency factor, may acquire greater importance in order to provide for the probable error in the derived values. It appears that, for equal rates and amounts of elevator deflection, the center-of-gravity position is of the greatest importance; the downwash factor, the air speed, and the tail efficiency factor are of approximately equal importance but are somewhat less important than the center-of-gravity position in determining the wing and the tail loads.

EQUATIONS FOR DETERMINING MAXIMUM LOADS

Although the preceding sections have given the simplified theory and its application to the computation of the load variation with time, the values of principal interest from structural considerations are the maximum increments of load on the wing and the tail following a given control deflection. Equations and factors for determining the theoretical maximum loads are as follows:

Maximum Wing Load Increment

Reference to equation (14) indicates that the increment of the wing angle of attack, and as a consequence the

L-443

wing load, is determined by the addition of a damped oscillatory term and a constant term that depends on the elevator deflection. The oscillatory term is so heavily damped,* however, that after a few seconds (figs. 3 to 10) its effect has practically disappeared and the increment in the wing angle of attack quickly approaches a final value equal to $K_3/K_2\ \delta_{max}$. If the values for K_2 and K_3 given by equation (11a) are substituted into equation (14), there is obtained the following equation for the final value of $\Delta\alpha$:

$$\Delta\alpha_{final} = \frac{\dfrac{dC_{L_t}}{d\delta}\,\Delta\delta_{max}}{\underbrace{-\left(\dfrac{dC_m}{d\alpha}\right)\left(\dfrac{1}{\eta_t A}\right)\left(\dfrac{Sb}{S_t x_t}\right)}_{1}-\dfrac{dC_{L_t}}{d\alpha}\left[\underbrace{\left(1-\dfrac{d\epsilon}{d\alpha}\right)}_{2}-\underbrace{\dfrac{dC_L}{d\alpha}\,\dfrac{K}{\sqrt{\eta_t}}\,\dfrac{\rho g}{2}\,\dfrac{x_t}{W/S}}_{3}\right]} \tag{21}$$

This value may be inserted in the equation

$$n = 1 + \frac{\dfrac{dC_L}{d\alpha}\,q\Delta\alpha}{W/S} \tag{22}$$

to obtain the resulting load factor following an elevator deflection $\Delta\delta_{max}$. Kaul and Lindemann in reference 4 have given an equation similar to equation (21) except for the first term in the denominator. Although the order of importance of the terms in the denominator of equation (21) will in most cases be 2, 3, and 1, computations indicate that the effect of the first term may sometimes be as large as that of the third term.

With the exception of $dC_m/d\alpha$ and $d\epsilon/d\alpha$, all of the quantities involved in equation (21) for a given case can be determined with a satisfactory degree of accuracy or are specified by the geometrical characteristics of the airplane.

From figures 3 to 10, it is seen that the airplane, in oscillating about the final value of $\Delta\alpha$, first reaches

---

*As a direct result of the assumptions employed, only the short-period highly damped oscillation appears in the equations.

a maximum value of $\Delta\alpha_{max}$. In order to account for this maximum value, the value of $\Delta\alpha_{final}$ given by equation (21) can be increased by the use of the correction factors given in figure 11. These factors were obtained by first noting from figure 3 that the time shift of the values of $\Delta\alpha_{max}$ from that of an instantaneous deflection to that for any other rate of deflection was approximately equal to t_1, the time required to reach the maximum elevator deflection. This result, together with the knowledge that the natural period of vibration about the final trim condition is equal to $2\pi/b$, places the time at which $\Delta\alpha$ reaches a maximum as approximately equal to $t_1 + \pi/b$. By a somewhat long and tedious derivation, not essential to this paper, the multiplying factor for equation (21) was found to be closely given by

$$F_0 = 1 + e^{-(K_1/2)\left(t_1 + \frac{\pi}{\sqrt{K_2 - K_1^2/4}}\right)}$$

The factor as given applied best when $t_1 \leqq 0.5$ and for the usual range of stabilities where $K_2 \geqq K_1^2/4$. For values outside this range the factor is obviously incorrect. Figure 11 shows the factor F_0 plotted against t_1 for various values of K_1 and ratios of K_1/K_2 that are likely to exist in an actual case. Alternatively, the maximum increment in the wing angle could be found by computing a few values of $\Delta\alpha$ near the time $t_1 + \frac{\pi}{\sqrt{K_2 - K_1^2/4}}$, with the use of equation (14) for this purpose.

Maximum Down-Tail Load Increments

Reference to figure 3 indicates that, with rapid rates of elevator deflection, the maximum down-tail load increment occurs when maximum deflection is reached; whereas, with the slower rates, the maximum increment actually occurs before the maximum deflection. On the basis that the maximum tail increment occurs at time t_1, equation (17a) could be rewritten as

$$\Delta\alpha_{t_d} = \frac{\Delta\delta_{max}}{t_1}\,\frac{K_3}{K_2}\left[F_1\left(1 - \frac{d\epsilon}{d\alpha} - \frac{dC_L}{d\alpha}\,\frac{\rho}{2}\,\frac{S}{m}\,\frac{x_t}{\sqrt{\eta_t}}\right) - F_2\frac{x_t}{V}\left(\frac{d\epsilon}{d\alpha} + \frac{1}{\sqrt{\eta_t}}\right) + \frac{d\alpha_t}{d\delta}\,\frac{K_2 t_1}{K_3}\right] \quad (23)$$

where F_1 and F_2 would be the values multiplying the

quantity $\delta_{max}K_3/t_1K_2$ of equations (12) and (13) when $t = t_1$.

As may be noted from the figures, substitution of t_1 for t would yield too low a value of the down-tail angle if the elevator motion were slow. An analysis of the results of the computations, together with the equations involved, indicated that the maximum down-tail angle will occur either at the time t_1 or near the time given by $0.4\pi/b$, depending on which value is the smaller. The value $0.4\pi/b$ is near the quarter period of the oscillation.

Figure 12 gives the values of F_1 and F_2 computed by substituting these two values of time into equations (12) and (13). The faired parts of the curves were obtained by applying the value t_1 and the horizontal portions were obtained by using the value $0.4\pi/b$ for the time. The approximation to the maximum theoretical value of the down-tail angle obtained by the substitution of the value $0.4\pi/b$ for the time is not so close, however, as the approximation factor previously given for the wing angle.

Maximum Up-Tail Load Increment

Reference to figures 3 to 11 indicates that the up-tail load increment has two values of interest: a maximum value that occurs during the first oscillation of the airplane and a final steady value that occurs when the airplane is traveling at a constant angle of attack and a constant angular velocity. In the final steady state, the rate of change of the angle of attack is zero; therefore, in equation (17a), which gives the effective tail angle, the middle term becomes zero. If the value $\Delta\alpha_{final}$ given by equation (21) is substituted for $\Delta\alpha$ in equation (17a) and the resulting expression is simplified, it is found that the final increment of up-tail angle is very nearly equal to

$$-\left(\frac{dC_m}{d\alpha}\right)\left(\frac{1}{\eta_t A}\right)\left(\frac{Sb}{S_t x_t}\right)\left(\frac{1}{\frac{dC_{L_t}}{d\alpha_t}}\right)\Delta\alpha_{final} \tag{24}$$

Equation (24) indicates that the final up-tail load

increment following a control displacement depends almost directly upon the slope of the pitching-moment curve for the airplane without the tail in place. Such a variation of the final value of the tail load precludes the possibility of giving the maximum value as a factor times the steady value, the procedure previously used with the wing. A reasonable method seems to be to divide the maximum value into two parts: the steady value already given and an additional value to be added to this given value.

Although it is impossible to give this extra increment exactly by any short expression, the following expression has been found to give a reasonably close approximation

$$\Delta\delta \frac{d\alpha}{d\delta} \left[e^{-K_1/2 \left(\frac{0.9\pi}{\sqrt{K_2 - K_1^2/4}} + t_1 \right)} \right] \tag{25}$$

This value was determined from an analysis of the equations involved as well as of the computed results, and it will be seen that the exponential time factor is similar to that previously given in the determination of F_0 for the wing and is subject to the same limitations as that factor. Figure 13 gives the variation of the exponential factor F_3 (the bracketed term of equation (25)) with t_1 for various values of K_1 and K_1/K_2.

DISCUSSION OF EQUATIONS OF MAXIMUM-LOAD INCREMENTS

The equations given include most of the factors required for the determination of the maximum load values of the wing and the tail following a given type of elevator movement. Because some of the quantities that appear vary only slightly between airplanes, it may be possible upon the completion of proposed flight tests to introduce average values in the equations that will make them appear less formidable.

It is obvious that, in any well-balacned design, the controls should be capable of being moved sufficiently by the pilot to maneuver the airplane to the applied load factor at all air speeds within the unstalled-flight range. The necessary relation between the elevator deflection and the load factor can be obtained from equations (21) and

(22), and the up-tail load is then found from expressions (21), (24), and (25). Although the down-tail load increment is related to the wing load factor through the increment of elevator deflection, it depends so markedly on the rate of movement that the rate must be known or assigned in advance.

At present, little is known regarding the rates of elevator deflection encountered under normal conditions except that a finite length of time (of the order of 0.2 sec) is required to apply the necessary force in even the quickest maneuver with the controls both aerodynamically and statically balanced. It seems reasonable to expect that, even though the controls are moved as rapidly as possible, the effective rate of movement would be slightly reduced owing to aerodynamic lag. Further, it can be expected that the rate of movement would be decreased with an increase in the size of the airplane because of an increase in the inertia of the control system.

Particularly severe tail loads can be built up if, after a movement of the elevator and during the time that the airplane is traveling on a curvilinear path, the elevator is abruptly reversed to an opposite position. This type of movement, under certain conditions, could result in a tail-load increment more than twice the value obtained with the single throw. Such movements are unusual and therefore probably of small concern. It should be noted, however, that, in a normal maneuver such as a pull-up, the elevator is returned to neutral more or less rapidly at some time after the initial upward displacement. If this return to neutral is made at about the time of the maximum upward load due to damping, substantial upward increment of load may be added to that already existing. Because of these possibilities, the horizontal tail for small maneuverable airplanes should probably be designed to withstand load increments incurred in a push-down, pull-up condition that would cover the flight V-G envelope from a negative to a positive value of g. The loads for the large airplane should be designed for a similar maneuver, but the rates of movement should be considerably lower.

Langley Memorial Aeronautical Laboratory,
National Advisory Committee for Aeronautics,
Langley Field, Va.

REFERENCES

1. Case, John, and Gates, S. B.: Tail Loads in Recovering from a Vertical Dive at Terminal Velocity. R.& M. No. 756, British A.C.A., April 1921.

2. Gates, S. B., and Howard, H. B.: On the Maximum Load in Pulling out from Vertical Dives. R.& M. No. 1232, British A.R.C., 1928.

3. Bolas, H., and Allward, G. A.: Loads on the Main Planes and Tail of an Aeroplane When Recovering from a Dive. R.& M. No. 1229, British A.R.C., 1928.

4. Kaul, Hans W.: Beeinflussung der Abfangbeanspruchungen durch Gestaltungsmassnahmen und Sicherheitsvorrichtungen. Luftfahrtforschung, Bd. 14, Lfg. 4/5, April 20, 1937, pp. 191-195.

5. Kaul, Hans W., and Lindemann, Hans: Flugversuche und Rechnungen zur Bestimmung der Luftkräfte am Flugzeug bei Höhenruderbetätigung. Jahrb. 1938 der deutschen Versuchsanstalt für Luftfahrt, pp. 167-178.

6. Schmidt, W., and Clasen R.: Luftkräfte auf Flügel und Höhenleitwerk bei einem Höhenruderausschlag $\beta_H = \beta_{H_{max}} \cdot kt e^{1-kt}$ im waagerechten Geradeausflug. Jahrb. 1937 der deutschen Luftfahrtforschung, R. Oldenbourg (München), pp. I 169 - I 173.

7. Schepisi, Giuseppe: Sulla Sollecitazione del Velivolo nella Represa. L'Aerotecnica, vol. XVIII, fasc. 4, April 1938, pp. 434-440.

8. Dickinson, H. B.: Maneuverability and Control Surface Strength Criteria for Large Airplanes. Jour. Aero. Sci., vol. 7, no. 11, Sept. 1940, pp. 469-477.

L-443

TABLE I

CHARACTERISTICS USED IN THE COMPUTATIONS

Characteristics held constant

x_t (ft)	b (ft)	S (sq ft)	S_t (sq ft)	K	$\frac{dC_{L_t}}{d\alpha_t}$	$\frac{dC_{L_t}}{d\delta}$	$\frac{d\alpha_t}{d\delta}$
-16	42	248	48.5	1.1	2.83	1.51	0.533

Characteristics varied

Case	ρ (slugs/cu ft)	V (fps)	q (lb/sq ft)	m (slugs)	I (slug-ft^2)	k_Y^2 (ft^2)	$\frac{dC_m}{d\alpha}$	$\frac{dC_L}{d\alpha}$	η_t	$\frac{d\epsilon}{d\alpha}$
1	0.00238	146.6	25.6	140	4400	31.4	0.125	4.15	0.95	0.53
2	.00238	183.3	40.0	140	4400	31.4	.125	4.15	.95	.53
3	.00238	220.0	57.6	140	4400	31.4	.125	4.15	.95	.53
4	.00198	201.0	40.0	140	4400	31.4	.125	4.15	.95	.53
5	.00163	265.0	57.6	140	4400	31.4	.125	4.15	.95	.53
6	.00198	201.0	40.0	140	4600	32.8	.125	4.15	.95	.53
7	.00198	201.0	40.0	150	4400	29.3	.125	4.15	.95	.53
8	.00198	201.0	40.0	140	4400	31.4	.125	4.56	.95	.53
9	.00198	201.0	40.0	140	4400	31.4	.125	4.15	.95	.60
10	.00198	201.0	40.0	140	4400	31.4	0	4.15	.95	.53
11	.00238	146.6	25.6	140	4400	31.4	.125	4.15	1.21	.53

L-443

TABLE II

VARIATION IN LOADS FOR CASE 4 CAUSED BY SEPARATELY CHANGING EACH OF A NUMBER OF PARAMETERS 1 PERCENT

Variable changed	Percentage of change in		
	Maximum increment of wing load	Maximum negative increment of tail load	Maximum positive increment of tail load
Center-of-gravity position	4.65	0.97	21.91
Airplane airspeed, V	2.00	1.97	2.00
Downwash factor, $d\epsilon/d\alpha$	.99	.23	-.31
Slope of lift curve, $dC_L/d\alpha$	-.28	-.06	.04
Tail efficiency factor, η_t	.22	-.48	.82
Airplane mass, m	.18	.08	-.07
Moment of inertia, I	.09	.58	.22
Altitude	.06	.05	.11

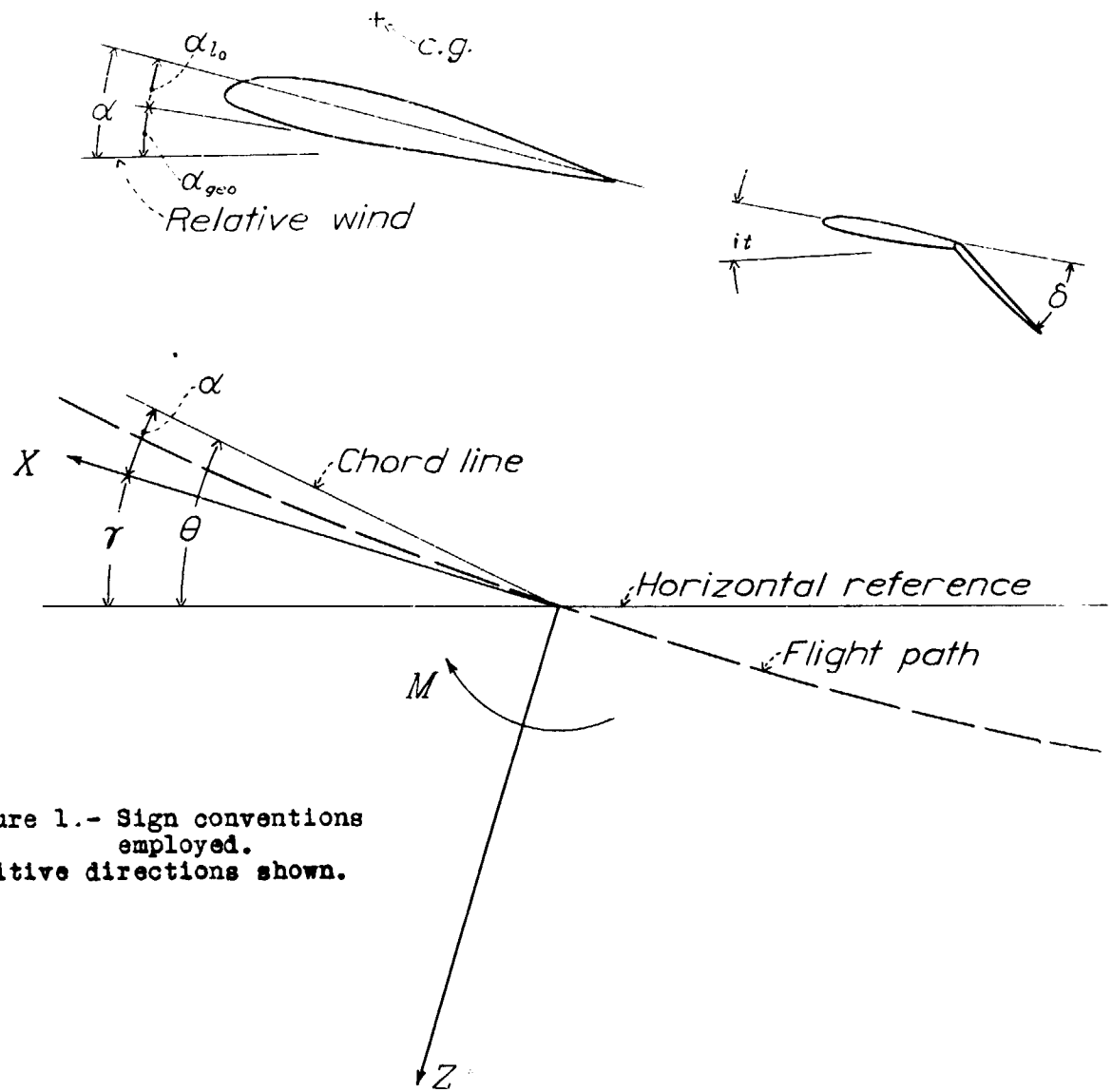

Figure 1.- Sign conventions employed.
Positive directions shown.

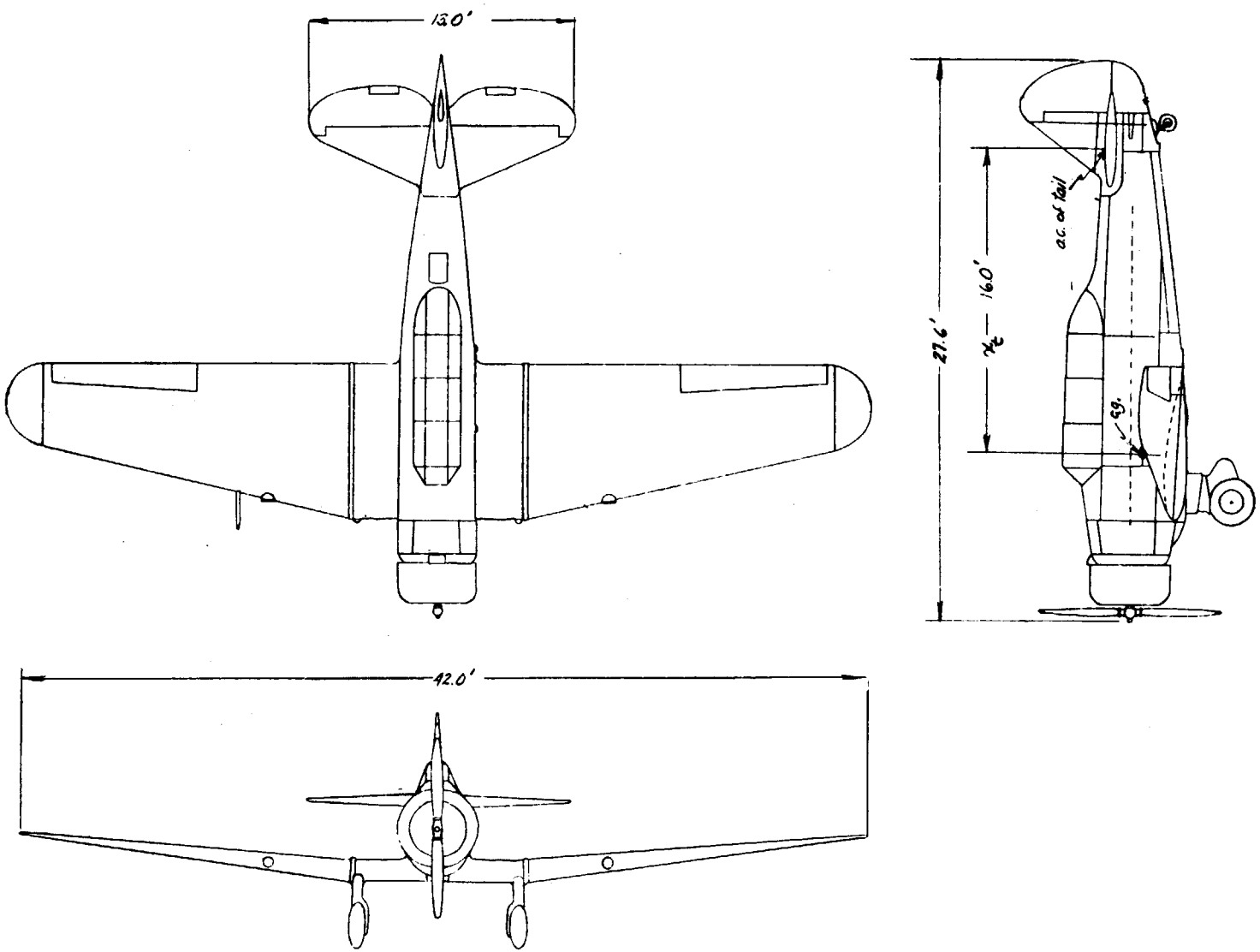

Figure 2. Drawings of BT-9B airplane.

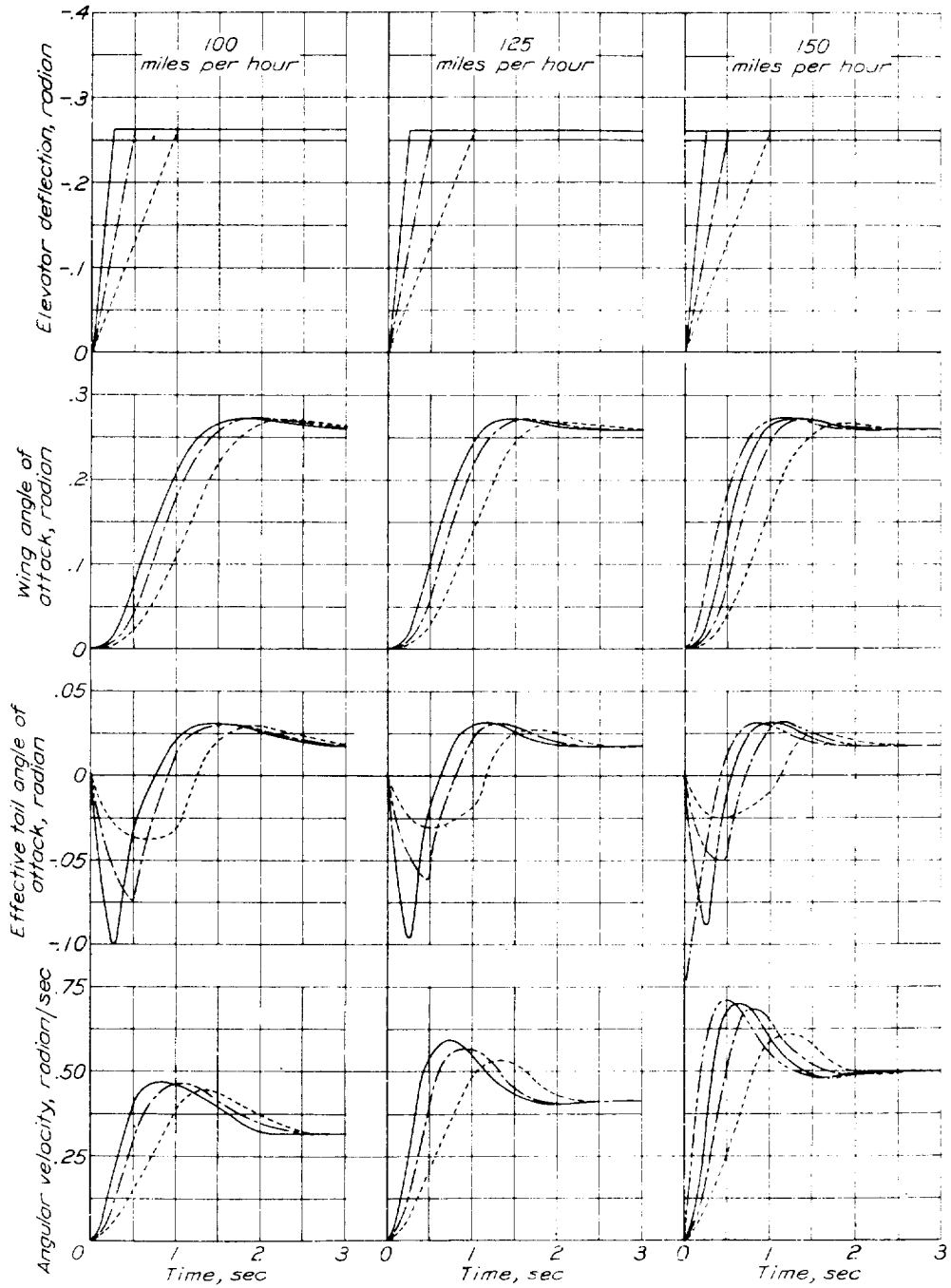

Figure 3.- Effect of rate of elevator deflection and air speed on increments of wing and tail angle of attack. Cases 1,2, and 3.

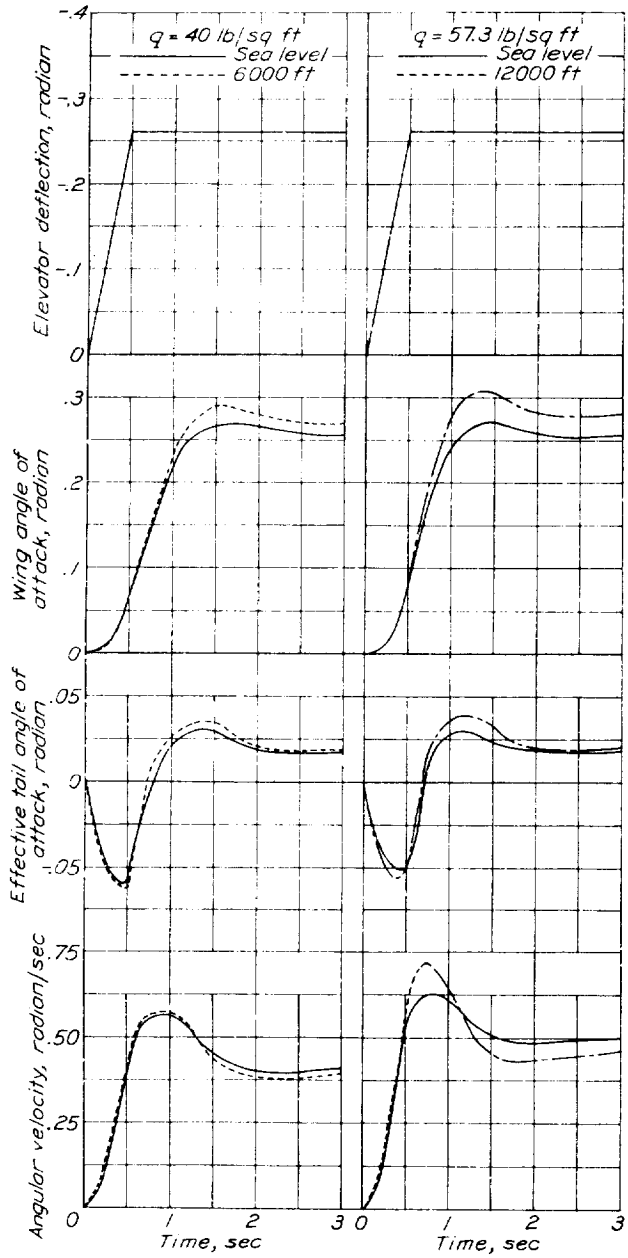

Figure 4.- Effect of altitude on increments of wing and tail angle of attack. Cases 2,3,4, and 5.

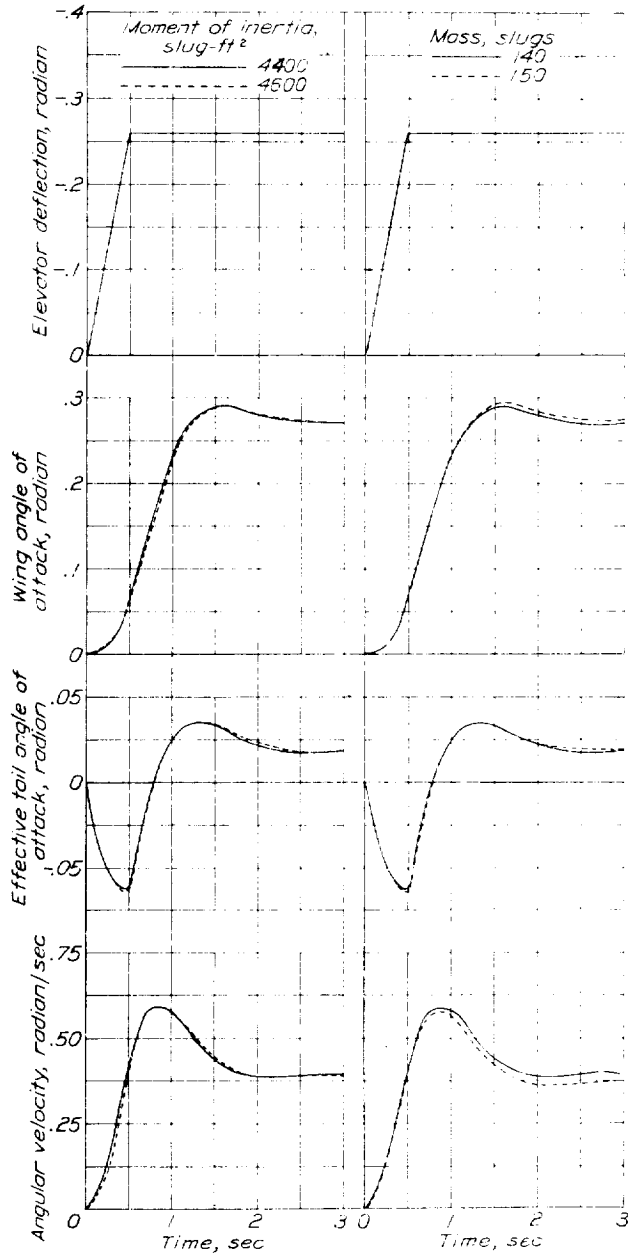

Figure 5.- Effect of moment of inertia on increments of wing and tail angle of attack. Cases 4 and 6.

Figure 6.- Effect of airplane mass on increments of wing and tail angle of attack. Cases 4 and 7.

Figure 7.- Effect of slope of lift curve on increments of wing and tail angle of attack. Cases 4 and 8.

Figure 8.- Effect of downwash factor $d\epsilon/d\alpha$ on increments of wing and tail angle of attack. Cases 4 and 9.

Figure 9.- Effect of center-of-gravity position on increments of wing and tail angle of attack. Cases 4&10.

Figure 10.- Effect of tail efficiency factor on increments of wing and tail angle of attack. Cases 1 and 11.

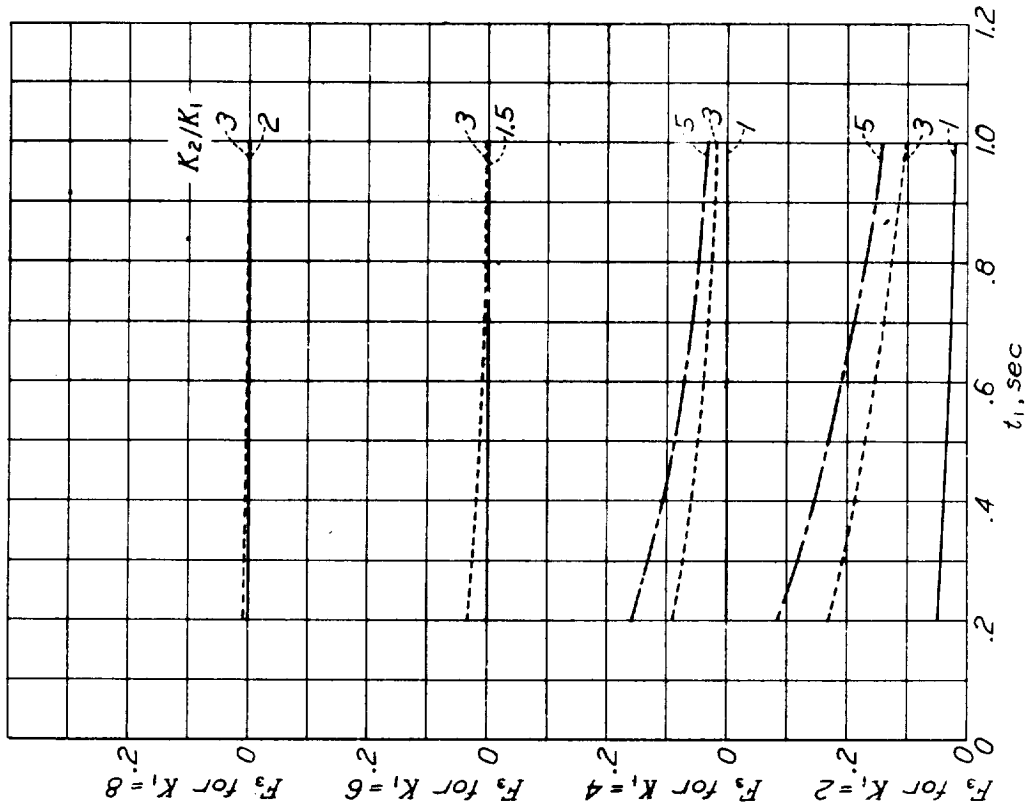

Figure 13.- Correction factor for maximum up-tail load.

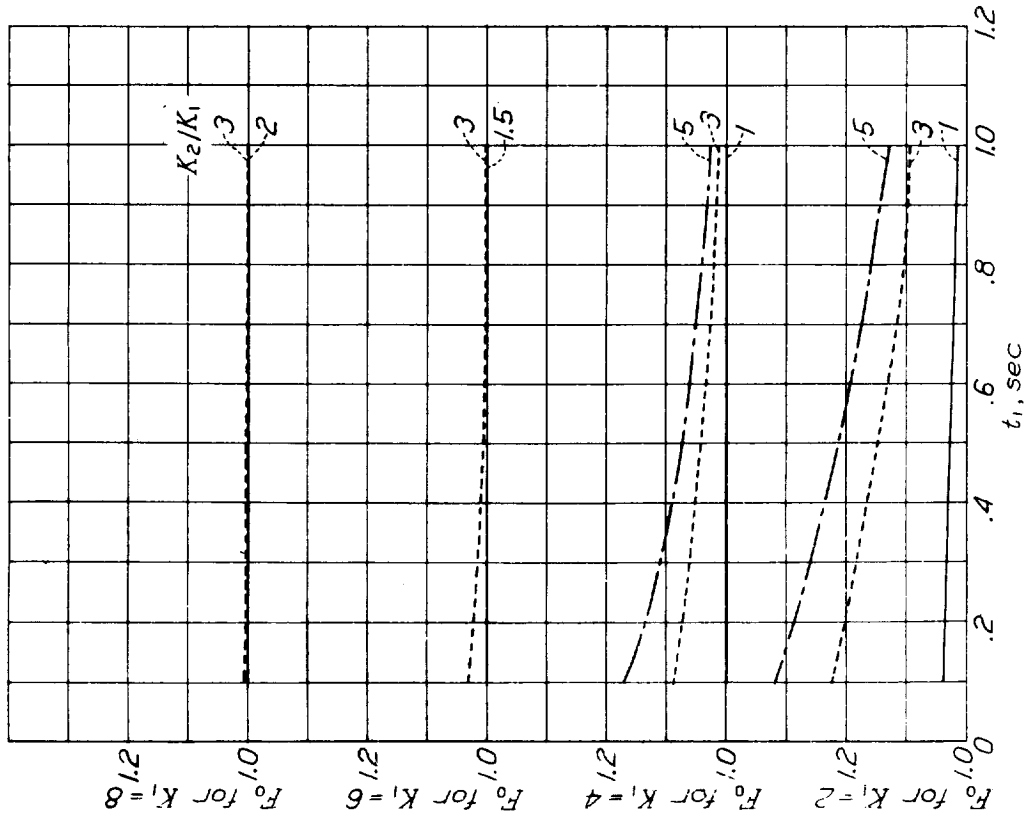

Figure 11.- Correction factor for maximum wing load.

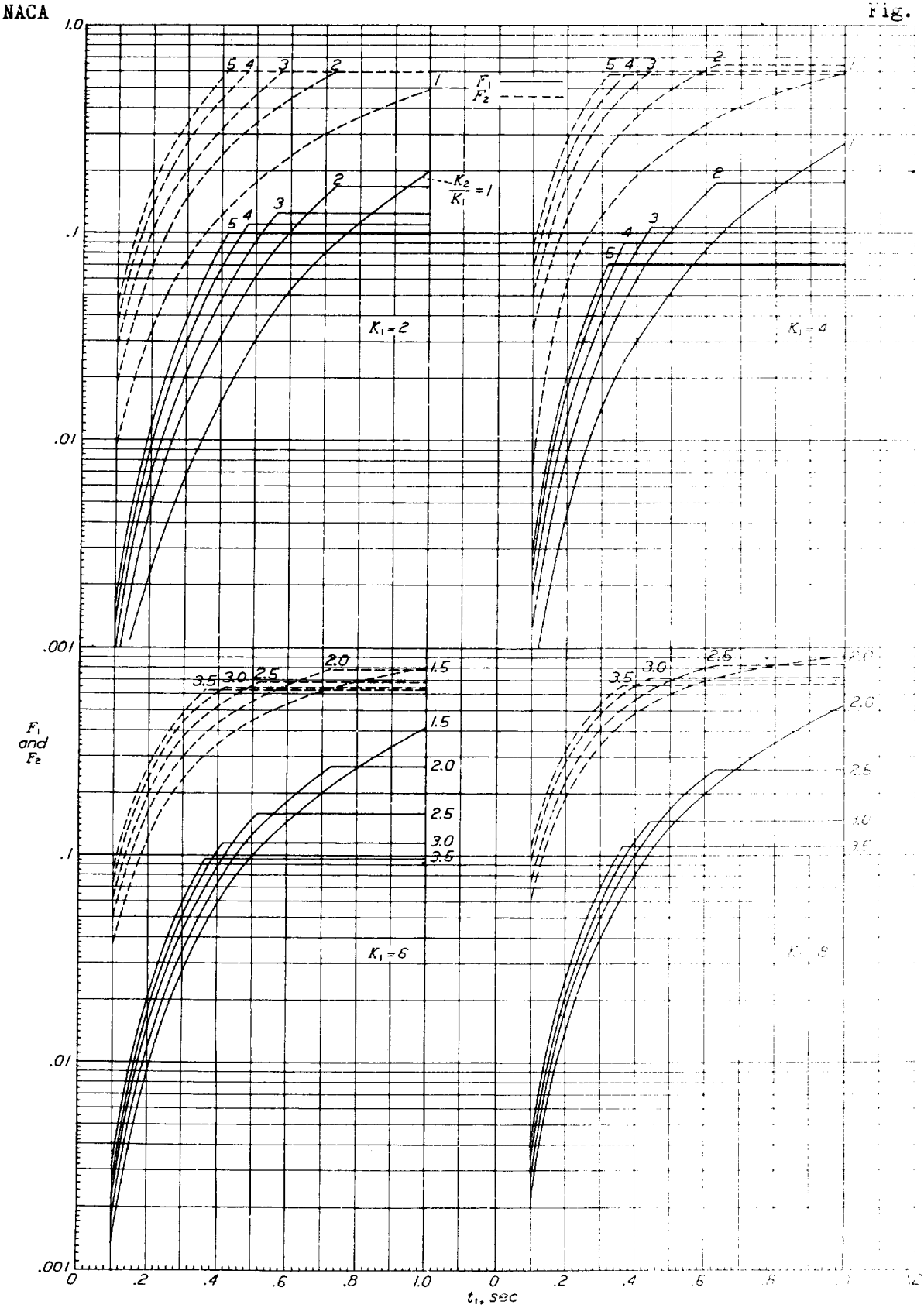

Figure 12.- Factors for determining maximum down-tail load.

TITLE: An Analytical Study of Wing and Tail Loads Associated with an Elevator Deflection

AUTHOR(S): Pearson, H. A.; Garvin, J. B.

ORIGINATING AGENCY: National Advisory Committee for Aeronautics, Washington, D. C.

PUBLISHED BY: Same

ATI- 7641

REVISION none

ORIG. AGENCY NO. ARR-L-443

PUBLISHING AGENCY NO.

DATE	DOC. CLASS.	COUNTRY	LANGUAGE	PAGES #	ILLUSTRATIONS
June '41	Unclass.	U.S.	Eng.	27	tables, diagrs, graphs

ABSTRACT:

Equations relating wing and tail loads are derived for control movements which proceed at constant rates to maximum values and remain constant. These equations are used to compute variations with time of wing and tail loads for a BT 9 B airplane. Equations are derived for determination of maximum increments of wing load, down-tail load, and up-tail load following a given elevator displacement.

DISTRIBUTION: Request copies of this report only from Originating Agency

DIVISION: ~~Aerodynamics (2)~~ (11-1-11)

SECTION: ~~Aerodynamic Loads (8)~~ (2)-16-1)

ATI SHEET NO.: R-2-8-11

SUBJECT HEADINGS: Airfoils - Aerodynamics (07710); Control surfaces - Aerodynamics (25600); Loads, Horizontal tail - Calculation (56011.4); BT 9 B (99148.5)(56011.4); Wings - Aerodynamic loads (99148.5)