FILE COPY
NO 1-W

NATIONAL ADVISORY COMMITTEE FOR AERONAUTICS

WARTIME REPORT

ORIGINALLY ISSUED

February 1942 as
Advance Restricted Report

PRINCIPLES AND METHODS OF RATING AND TESTING CENTRIFUGAL SUPERCHARGERS

By Herman H. Ellerbrock, Jr. and Arthur W. Goldstein

Aircraft Engine Research Laboratory
Cleveland, Ohio

FILE COPY
To be returned to
the files of the National
Advisory Committee
for Aeronautics
Washington, D. C.

NACA

WASHINGTON

NACA WARTIME REPORTS are reprints of papers originally issued to provide rapid distribution of advance research results to an authorized group requiring them for the war effort. They were previously held under a security status but are now unclassified. Some of these reports were not technically edited. All have been reproduced without change in order to expedite general distribution.

PRINCIPLES AND METHODS OF RATING AND TESTING CENTRIFUGAL SUPERCHARGERS

By Herman H. Ellerbrock, Jr. and Arthur W. Goldstein

SUMMARY

A discussion of the general principles involved in the rating and testing of centrifugal superchargers, a statement and discussion of present standard methods in rating and testing, and reasons for the adoption of these standards are given.

INTRODUCTION

There are several considerations from which the value of a supercharger may be determined. First, it may be rated with the object of improvement of design. Second, it may be rated in such a way that its optimum operating conditions may be determined. Third, it may be so rated as to facilitate comparison with another supercharger as (1) a pressure booster, (2) a compressor, or (3) a power booster for internal-combustion engines.

If the supercharger is to be rated from considerations of improvement of design, it is obvious that no one standard of rating can be set up, inasmuch as the rating used depends upon the question being investigated. A method of rating the supercharger is needed, however, that will permit the investigation of each part of the supercharger separately in order to evaluate its particular effect on the performance of the whole machine. In contrast to this method is the method by which the supercharger is rated as an engine accessory. In this case the over-all performance is desired and the ducts to the cylinders should be included in the supercharger test rig, although the addition of these ducts to the set-up may obscure the actual operation of the impeller and diffuser. The limitation for this type of rig lies in the fact that certain details of the engine set-up may prevent accurate measurements of the air-stream condition; thus, it is necessary to modify such a rig and at the same time to maintain its essential features. No investigation of these questions has been made to date by the NACA.

The supercharger has been considered, in work that has been done thus far, chiefly as a pressure-producing

instrument. The ratings that have been used are based on the pressure-producing capacity of the supercharger. The test rig used has been designed to determine the performance of impeller, diffuser, and collector case as a whole, the duct system necessary in actual installation being neglected. The work done so far, therefore, can be considered only as the first step in a program for investigating the possibilities for improvement of design. A variable-component set-up now in use by the NACA will permit separate evaluation of the impeller, the diffuser, and the impeller-diffuser combination.

BASIS OF PRESENT SUPERCHARGER RATINGS

The work done by a supercharger on the air passing through it is done by the one moving part - the impeller. The torque on the shaft is equal to the rate of change of moment of momentum of the gas, if the torque due to drag of the supercharger housing is neglected.

The following symbols will be used in the equations of this section:

τ torque on shaft, poundal-feet

μ moment of momentum of gas, pound (mass) feet^2 per second

t time, seconds

r distance from axis of rotation, feet

w work done by impeller per unit mass of gas, foot-poundals per pound (mass)

ω angular velocity of shaft, radians per second

V velocity of impeller tip, feet per second

V_{g_t} component of velocity of gas in direction of velocity of impeller at distance r from axis, feet per second

dm element of mass, pound (mass)

W mass flow per unit time, pound (mass) per second

Subscripts:

1 impeller inlet
2 impeller tip

The moment of momentum of an element of mass is

$$d\mu = (rV_{g_t})\ dm$$

For a given element of gas, dm is constant but rV_{g_t} changes. The increase in $d\mu$ for an element is

$$\Delta\ (d\mu) = \left(r_2V_{g_{t_2}} - r_1V_{g_{t_1}}\right) dm$$

If average values for $V_{g_{t_2}}$ and $V_{g_{t_1}}$ are assumed at both the inlet and the impeller tip, the increase in moment of momentum per unit mass is

$$\Delta\left(\frac{d\mu}{dm}\right) = r_2V_{g_{t_2}} - r_1V_{g_{t_1}}$$

The increase in moment of momentum per unit time is equal to the torque

$$\tau = W\Delta\left(\frac{d\mu}{dm}\right) = W\left(r_2V_{g_{t_2}} - r_1V_{g_{t_1}}\right)$$

The shaft-power input is

$$Ww = \tau\omega = W\omega\left(r_2V_{g_{t_2}} - r_1V_{g_{t_1}}\right) = W\left(V_2V_{g_{t_2}} - V_1V_{g_{t_1}}\right)$$

since

$$\omega = \frac{V_2}{r_2} = \frac{V_1}{r_1}$$

The work done per unit mass is therefore

$$w = \left(V_2V_{g_{t_2}} - V_1V_{g_{t_1}}\right)$$

If there are a great number of thin blades, the relative velocity of the gas with respect to the blades will be parallel to the blades. If these blades are radially directed at the impeller tip, the tangential component of the velocity of the gas will equal the tip velocity

$$V_{g_{t_2}} = V_2$$

Suppose, further, that the velocity at the entrance has no tangential component, or that $V_{g_{t_1}} = 0$. Then,

$$w = V_2^2$$

In order to convert the expression into practical units from absolute units,

$$w = V_2^2/g = V^2/g$$

where w is work in foot-pounds per pound (mass).

Thus, V^2/g is the work per pound of air put into the supercharger with an infinite number of blades with radially directed tips and with no tangential component of velocity at the entrance. It includes such losses as heat, friction, etc., except for the effects of friction with the case. In a machine with the foregoing specifications this amount of work would equal the maximum amount of energy per unit mass that could be imparted to the gas by the machine. If such a machine were perfect, the conversion of the work V^2/g would result in a pressure ratio that would be the highest attainable at the speed V by a supercharger with radially directed blade tips.

In an actual machine, owing to the fact that there is a finite number of blades, which causes relative circulation, to the fact that the inlet velocity has a tangential component that causes shock losses, and to the fact that friction losses exist, the pressure ratio actually attained is less than that theoretically possible from the perfect machine described previously. A means of comparing the actual pressure ratio with that which could be theoretically obtained with a perfect machine of the foregoing specifications has been found in the use of the pressure coefficient. The pressure coefficient is the ratio of the energy obtained from a supercharger, if the compression is adiabatic and frictionless and if the energy is evaluated at the same pressure ratio as that actually attained, to the energy that could be obtained from a perfect machine of the foregoing specifications operating at the same speed as the actual machine.

The energy obtained from a supercharger, if the compression is adiabatic and frictionless and if the energy is evaluated at the same pressure ratio as that actually attained, may be derived as follows: The steady-flow energy equation, if the effect of gravity is negligible, is

$$dh_s + d\frac{V_g^2}{2} = dq + dw \tag{1}$$

(See the appendix for definitions of symbols used hereinafter.) If no heat is gained or lost by the gas in passing through the supercharger, then $dq = 0$. The work done by the supercharger on unit mass of gas is therefore

$$w = \int dw = \int d\left(h_s + V_g^2/2\right) \tag{2}$$

The foregoing equation and the subsequent derivations may be simplified by the introduction of total or stagnation values of the gas properties, which eliminates the velocity term. If a moving stream is stopped, kinetic energy is used in creating a pressure and temperature rise. If the process is a reversible adiabatic, there is no entropy increase and the final state reached by the gas is called the stagnation state; the values of E, S, T, p, and h corresponding to this state are called the stagnation, or total, values.

In order to calculate the change of state, the steady-flow energy equation of thermodynamics is employed with the effect of gravity being assumed negligible

$$\int_{h_s}^{h_t} dh + \int_{V_g^2/2}^{0} d\frac{V_g^2}{2} = \int_0^q dq + \int_0^w dw$$

As no energy is added to the gas during the process,

$$dq = dw = 0$$

The two following equations for the change are therefore obtained

$$\int_{S_s}^{S_t} dS = 0$$

and

$$\int_{h_s}^{h_t} dh + \int_{V_g^2/2}^{0} d\,\frac{V_g^2}{2} = 0$$

The integration of both equations gives

$$S_t = S_s$$

and

$$h_t = h_s + \frac{V_g^2}{2}$$

For a perfect gas

$$h = c_p\,T$$

The temperature corresponding to the total state is therefore

$$T_t = T_s + \frac{V_g^2}{2c_p} \tag{3}$$

For an isentropic change, it is known that

$$\frac{T_2}{T_1} = \left(\frac{p_2}{p_1}\right)^{\frac{\gamma-1}{\gamma}}$$

therefore

$$T_t = T_s\left(\frac{p_t}{p_s}\right)^{\frac{\gamma-1}{\gamma}} = T_s + \frac{V_g^2}{2c_p} \tag{4}$$

The static pressure p_s is obtained with a static tube, whereas the total pressure is obtained with a pitot tube.

Equation (2) may now be simplified as follows by means of the definition of total enthalpy:

$$w = \int_{h_{t_1}}^{h_{t_2}} dh_t = h_{t_2} - h_{t_1} \equiv H = c_p \left(T_{2t} - T_{1t}\right) \qquad (5)$$

By definition

$$dh \equiv dE + d(pv) \qquad (6)$$

and

$$TdS \equiv dE + pdv \qquad (7)$$

therefore

$$dh = TdS + vdp \qquad (8)$$

As a result, equation (5) becomes

$$w = \int T_t \, dS_t + \int v_t \, dp_t \qquad (9)$$

Not all of this work can be regarded as useful. The work that increases the entropy is wasted as is the extra work of compression $\int vdp$, which is due to the increased temperature caused by the increase in entropy of the gas. The useful work performed by the supercharger is, according to equation (9),

$$\text{Useful work} = w_{ad} = \int v_{t_{ad}} \, dp_t \qquad (dS = 0)$$

where $v_{t_{ad}}$ is the specific volume for isentropic compression.

The value of $\int v_{t_{ad}} \, dp_t$ is not obtained according to the actual process that takes place, but according to an adiabatic isentropic process. It is evident, therefore, that the final state reached by adiabatic isentropic

compression is not that which is reached in the actual compression process. As a result, the upper limit for the integral $\int v_{t_{ad}}\, dp_t$ is not determined. The present practice is to regard the final pressure of the air as the important factor and to regard as useful that work which is necessary to produce the given pressure rise. Hence, the final pressure of the isentropic process is defined as that of the actual process. The corresponding temperature $T_{t_{ad}}$ is less than that actually reached, T_{t_2}.

$$w_{ad} = \int_{p_{t_1}}^{p_{t_2}} v_{t_{ad}}\, dp_t \qquad (dS = 0) \tag{10}$$

From equation (8) for any isentropic process,

$$\int_{h_{t_1}}^{h_{t_{ad}}} dh_t = \int_{p_{t_1}}^{p_{t_2}} v_{t_{ad}}\, dp_t \qquad (dS = 0) \tag{11}$$

but

$$\int_{h_{t_1}}^{h_{t_{ad}}} dh_t = h_{t_{ad}} - h_{t_1} \equiv H_{ad} \tag{12}$$

The foregoing equation represents the isentropic increase in total enthalpy.

From equations (10), (11), (12), the following equation is obtained:

$$w_{ad} = \int_{p_{t_1}}^{p_{t_2}} v_{t_{ad}}\, dp_t = H_{ad} = c_p \left(T_{t_{ad}} - T_{t_1}\right) \tag{13}$$

The useful work input to the gas per unit mass is, therefore, H_{ad}.

For an isentropic compression,

$$T_{t_{ad}} = T_{t_1} \left(\frac{p_{t_2}}{p_{t_1}}\right)^{\frac{\gamma-1}{\gamma}}$$

and

$$H_{ad} = c_p\, T_{t_1} \left(\frac{T_{t_{ad}}}{T_{t_1}} - 1\right) = c_p\, T_{t_1} \left[\left(\frac{p_{t_2}}{p_{t_1}}\right)^{\frac{\gamma-1}{\gamma}} - 1\right]$$

If c_p is in Btu per pound per $^{\circ}F$, the factor J, 778 foot-pound per Btu, is required to express H_{ad} in foot-pounds per pound (mass).

The pressure coefficient is defined as

$$q_{ad} = \frac{H_{ad}}{V^2/g}$$

It is seen from the foregoing discussion that, if H_{ad} is regarded as the useful work output, q_{ad} is the ratio of the useful work output to the maximum work output that can be obtained from a radially bladed machine operating at the same tip speed. Because V^2/g does not represent the actual work input, q_{ad} is not an efficiency rating but might be more legitimately regarded as a capacity rating. It is called a coefficient.

The adiabatic efficiency is defined as the ratio of the useful energy received by the gas to the net energy increase of the gas. The total energy increase includes, in addition to the useful energy received, energy that is useless and that may therefore be regarded as a loss. This energy loss is due to eddies, skin friction, disk friction, and shock waves.

The through-flow energy equation is

$$dw = dq + dh_t \tag{14}$$

The net increase in gas energy is

$$\int_{h_{t_1}}^{h_{t_2}} dh_t = h_{t_2} - h_{t_1} \equiv H = c_p \left(T_{t_2} - T_{t_1}\right)$$

The adiabatic efficiency is given by

$$\eta_{ad} = \frac{H_{ad}}{H} = \frac{T_{t_{ad}} - T_{t_1}}{T_{t_2} - T_{t_1}} = \frac{T_{t_1}\left[\left(\frac{p_{t_2}}{p_{t_1}}\right)^{\frac{\gamma-1}{\gamma}} - 1\right]}{T_{t_2} - T_{t_1}}$$

The shaft efficiency is the ratio of the useful energy received by the gas to the total energy input to the gas. It involves, in addition to the losses mentioned in the definition of η_{ad}, the heat loss from the supercharger to the surrounding atmosphere. The total energy input to the gas is equal to the shaft power required minus the bearing losses. From this definition and equation (14) it can be seen that

$$P = W\left(\int dq + \int dh_t\right) \tag{15}$$

or

$$P = W\left(H + q\right)$$

where q is the heat lost per pound of gas. The shaft efficiency is defined as

$$\eta_s = \frac{W\ H_{ad}}{P} \tag{16}$$

Inasmuch as the rating value for a supercharger changes with the condition of its operation, all the rating values should be given with the appropriate operating conditions. In order to plot these data graphically, the variables upon which these ratings depend must be found.

An exact analysis, which would eliminate the necessity for making tests, is not practicable; therefore the method of dimensional analysis is used. In order to apply this method, it is necessary first to find upon what primary variables the operation depends and then to use the analysis to reduce the number of these variables.

Theoretically, it is possible to use the Euler equation of hydrodynamics, the equation of continuity, and the equation of state of the gas for frictionless flow ($pv^{\gamma} = K$) to obtain the adiabatic work H_{ad} for frictionless flow. The result would be an equation of the form

$$H_{ad} = f\ (Q,\ V,\ D,\ \gamma,\ T)$$

Other variables involving the number of blades, their shape, and other factors depending upon the geometry of the supercharger would also be involved but, for a given supercharger, they would be constants and not variables.

In the actual case, various losses must be taken into account because the losses reduce the available H_{ad}. In flow through a pipe, there is an increase of entropy determined by the equation

$$\int TdS = f\ \frac{V_g^2}{2}$$

The friction factor f is a function of the Reynolds number and of the roughness of the pipe. At the high Reynolds numbers that occur in the flow of air through the impeller and the diffuser, the factor f is practically a constant. The velocity involved in this loss is, in the impeller, proportional to the quantity Q/D^2. In the diffuser, the important component of the velocity is the tangential component, which is approximately proportional to V, the tip speed. The friction loss is given as a function of Q, V, and D. This friction loss takes into account the turbulence losses. The further losses due to shock waves increase if the fluid exceeds the local velocity of sound and are due to the compressibility of the fluid. The compressibility can be represented by the velocity of sound (reference 1). The Mach number V/a is an index of this loss. Windage losses and leakage losses do not involve any variables not yet considered. Since γ is a constant for for air, for a given supercharger with losses the performance may be represented by some formula as

$$H_{ad} = f_1\left(Q,\ V,\ D,\ T,\ \frac{V}{a}\right)$$

According to the dimensional method of analysis, the function on the right-hand side of the equation is expanded into an infinite series, each term of which contains a dimensionless constant multiplied by the product of all the variables, each raised to a different power. These powers vary from term to term, but dimensional considerations show that the resultant dimensions of each term (in powers of the primary dimensions: mass, length, and time) must be the same and must be equal to the dimensions of the left-hand side of the equation. The result is three conditional equations for the exponents of each term, which establish certain relations between the exponents that allow the variables to be grouped, thus combining the original variables into two groups that may be regarded as the variables against which the performance may be plotted,

$$H_{ad}\Big/\frac{V^2}{g} = f_2\ (F,\ M)$$

All the variables in this equation are dimensionless.

The procedure for the calculation of H_{ad} is applicable to the calculation of H, so that the ratio of H_{ad}/H may be stated as

$$\eta_{ad} = f'\ (F,\ M)$$

The detailed derivation of this equation may be obtained from references 2 and 3. It is easily seen that η_{ad} in the last formula may represent any dimensionless parameter describing the action of the supercharger, such as the pressure ratio. It has been assumed that the effect of variation of heat transfer on the supercharger parameters is small; as a result this factor will be ignored, even though it is present, in much the same manner as the effect of changes of the Reynolds number have been neglected because of the small resultant changes in supercharger performance. The validity of the heat-transfer assumption is now being investigated at the Langley Memorial Aeronautical Laboratory. If the heat losses are neglected, the aforementioned formula for η_{ad} is quite general and similar formulas may be obtained for η_s, q_{ad}, and pressure ratio.

The velocity of sound in a gas is proportional to the square root of the product of γ, R, and T (reference 4). In the correlation of the data for a given supercharger, γ, R, and D are constants, so that the test results may be plotted according to the equation

$$\eta = f\ (Q/n,\ V/\sqrt{T})$$

where V is equal to πDn. If it is assumed that the effect of inlet temperature on the Mach number is small, the following formula is evolved. It is the one in present-day use:

$$\eta = f\ (Q/n, V)$$

This equation means that the performance of the supercharger η is plotted against the load coefficient Q/n as a variable, with the impeller tip speed V as a parameter. There is the possibility that the factor $\sqrt{T}$ may affect the results sufficiently to prevent the best correlation of data; for example, a change of the inlet-air temperature from 70° F to 100° F corresponds to a change of 600 rpm with an original impeller speed of 20,000 rpm for a constant Mach number.

If it is assumed that

$$q_{ad} = \frac{H_{ad}}{V^2/g} = \frac{c_p T_1 Y}{V^2/g} = F_1\left(\frac{Q}{n},\ V\right)$$

then for a given tip speed and volume T_1Y is a constant or

$$T_1Y = 519.6(Y)_{60}$$

On this premise the pressure ratio at 60° F is calculated.

It is to be noted that, if the dimensionless ratio p_2/p_1 had been used instead of the dimensionless ratio q_{ad} in the relationship

$$p_2/p_1 = F_2\ (Q/n,\ V)$$

the result would have been a constant value for p_2/p_1 for given values of volume flow and tip speed, regardless of inlet temperature. This same result is obtained if the

factor $1/\sqrt{T}$ is not neglected in the Mach number, regardless of whether p_2/p_1 or q_{ad} is used in the derivation. Tests are now being conducted at the Langley Memorial Aeronautical Laboratory to determine which assumption best agrees with test results.

TEST RIGS

If a supercharger is rated with the purpose of evaluating its parts in order to improve design, tests must be planned to permit the separate evaluation of each of the parts; a rating involving other parts of the supercharger may well obscure the actual values of the parts being rated. If, for instance, a number of impellers have been tested with a given diffuser and one of these has been found to be definitely more efficient, a rating involving the impeller-diffuser combination being used, this higher efficiency may possibly be due to the impeller-diffuser combination. It is possible that an inferior impeller may show up as superior when combined with the correct diffuser.

Most of the tests previously conducted by the NACA for the purpose of standardization of procedure have been aimed at the testing of the entire combination of impeller, diffuser, collector case, and housing of the supercharger with no thought of cylinder ducts, carburetor, and other engine installation accessories. The chief concern in designing any test rig is that it shall permit accurate measurements of the air-stream condition in front of and behind the supercharger. Difficulties already encountered in obtaining test results that agree in various laboratories have been caused by improper test rigs as well as by improper or faulty instrumentation of the rig.

Care must be taken in any test rig to obtain pressure and temperature measurements in a plane where the air stream is homogeneous and where there is no axial circulation to give incorrect pitot-tube readings. In order to establish a practically homogeneous flow, it is necessary that a sufficient length of straight pipe be upstream and downstream of the measurement planes. Although there is reason to doubt the general usefulness of the rule, an attempt is usually made to have a straight section of pipe 12 pipe diameters long in front of each measurement plane. If the cross section of the pipe is rectangular, this

length is made twelve times the smaller dimension of the cross section. A straight section of pipe at least 3 pipe diameters long should follow the outlet measurement planes. The measurement plane in the inlet duct is twice the smallest dimension of the cross section of the duct from the inlet flange of the supercharger housing. At this location it has generally been found that there is no swirl in the air stream, although rotation does exist closer to the impeller, and that the inlet temperatures are not affected by the hot case or backflow of the air. Total-pressure and temperature readings are taken by inserting the measuring devices into the stream a distance equal to one-third of the distance across the stream. If the flow is practically homogeneous, measurements taken as indicated will give readings that are about average for the cross section.

Measurements are generally taken in two outlet pipes at a distance 12 pipe diameters from the discharge port flange as previously mentioned. It has been shown in one case that a pipe length of 20 pipe diameters was not sufficient to eliminate rotation. The best procedure in the light of present knowledge is to conduct a preliminary survey of the air stream to determine if it is uniform. If it is not uniform, single readings obtained in any one pipe cannot be used. In addition to the fact that the stream may not be uniform in any one pipe, its uniformity may vary so much from pipe to pipe, that data taken in two pipes may not give a representative picture of the average stream condition for the supercharger. The importance of this variation is illustrated by unpublished results of tests conducted at the Langley Memorial Aeronautical Laboratory. In these tests, seven of the outlet ports of the collector case were plugged and the remaining seven were connected by discharge stacks of unequal length to a collector ring. Data were taken in two of the stacks 12 pipe diameters from the supercharger discharge ports. That these data were not sufficient to obtain a true stream picture is indicated by the fact that measurements subsequently taken in all seven pipes 2 pipe diameters from the discharge ports showed variations in pressure of 0.9 inch of mercury.

A test rig for the separate evaluation of theparts of a supercharger has been designed and built. This rig is known as the variable-component supercharger test rig; general views of the test rig are shown in figures 1 and

2. Two diagrammatic sketches of the rig are shown in figures 3 and 4. The test rig proper consists of a collector, the front half of which is torus-shaped and in which are placed an impeller, a diffuser, and an inlet adapter to which the inlet pipe is attached. The large collector forms a chamber into which the air is discharged from the diffuser and in which the pressure is equalized. Two long pipes are attached to the collector and form the outlet ducts. These pipes are long enough to permit measurements to be made in them according to the standards described in this paper. These outlet pipes are connected to large bends which, in turn, connect by means of long straight pipes to a common outlet placed beneath the rig. Throttle valves are placed in both the inlet and the outlet to regulate the flow and pressure. The impeller is driven through a gear box by some unit, which in figure 5 is an internal-combustion engine. A dynamometer is to be preferred to an internal-combustion engine because the speed variation with a dynamometer is small. A large orifice tank, with either a thin-plate orifice or a nozzle in one end to measure the quantity of air, is attached to the inlet pipe. The large box shown in figures 1 and 2 around the collector is lagged; as a result, heat loss from the rig to the air is negligible. The outlet pipes are also lagged. Several views of the component parts of the rig are shown in figures 5, 6, and 7. Measurements of pressures and temperatures in the inlet and outlet pipes are made in positions determined by standards described in this paper for testing the combination of impeller, diffuser, collector case, and housing.

Inasmuch as few tests have been made to date on this rig, questions as to the uniformity of flow and similar questions cannot be answered. It is thought, however, that this rig is more efficient than a rig with a number of discharge pipes attached to the supercharger collector case because it gives results that more truly represent the actual performance of the impeller and diffuser.

MEASURING INSTRUMENTS

With regard to the use of nozzles or thin-plate orifices as metering obstructions for mass-flow measurements, J. L. Hodgson in a discussion of reference 5, which is published with that article, states: "The writer is coming more and more to the view that, provided the metering

obstruction is accurately calibrated over the flow range ...., it matters little what simple form of measuring obstruction is used ..... . It is self-evident that the more elaborate the contour of the metering obstruction is, the more difficult it will be to reproduce it with accuracy and make use of previous calibrations of similar metering obstructions. As is well known, very accurate results can be obtained by means of a square-edged orifice in a thin plate." Experimental confirmation has been obtained by the NACA of the statement that equally accurate results can be obtained with either nozzles or thin-plate orifices. With thin-plate orifices, calibration curves are well known. In contrast to practice with nozzles, small pressure differences must be used. A complete account of the use of thin-plate orifices, including instrumentation and a complete bibliography of the subject, is given in reference 6. For installations in which the air-measuring apparatus is placed at the exit of the test rig, the A.S.M.E. exit nozzle gives satisfactory results.

Although the design of the total-pressure tubes in use varies somewhat, test results show that good agreement exists between the various pitot tubes. An arrangement used to make a survey of the total pressure across a duct is shown in figure 8.

For all-round usage, it appears that the pitot-static tube gives more reliable static-pressure measurements than the wall-static tube, although carefully constructed wall taps with all burrs removed should give reliable results. The wall-static tubes apparently give results that are too high when rotation is present in the pipe. This explanation is supported by the fact that inlet wall-static measurements are better than those taken at outlets where much greater rotation might be expected. In fact, outlet wall-static measurements frequently show values greater than the total-pressure readings at low volume flows when rotation becomes an important part of the motion. The actual static pressure at one-third of the duct width into the stream, however, would depend upon the amount of swirl and may not, therefore, be a much better indication of the true average value than that obtained by the wall tap. It is therefore an important matter that swirl be eliminated where possible and that pressure tubes be correctly oriented (not necessarily axially). With swirl present, it is important to take several readings in each duct.

As has been brought out in the standard test procedure

(reference 7), thermocouples are used for measuring temperatures. Temperature probes are now being made to give accurate measurements of total temperature. The value of such probes is that, because their recovery coefficients are nearly equal to unity, the calculation of outlet total temperatures by means of static pressures of questionable accuracy is eliminated. Where an ordinary thermocouple is used, it should be calibrated in order to determine this coefficient.

The method of calibrating thermocouples is as follows: If a thermometer is placed in a moving air stream, it will read higher than the actual temperature because of the stagnation of the air stream in its vicinity. If the adjacent layer were to be stopped entirely, the thermocouple would register the total temperature. Most thermometric devices do not recover all the kinetic energy and, as a result, instead of the reading being

$$T_t = T_s + \frac{V_g^2}{2c_p}$$

the device reads

$$T_o = T_s + \alpha \frac{V_g^2}{2c_p} \tag{17}$$

For specially constructed thermometric probes, the coefficient of recovery α is unity. For thermometers and thermocouples α is more nearly 0.5 and 0.8, respectively.

From equation (4)

$$T_t = T_s \left(\frac{p_t}{p_s}\right)^{\frac{\gamma-1}{\gamma}} = T_s + \frac{V_g^2}{2c_p}$$

and the following equation is obtained:

$$T_s = \frac{V_g^2/2c_p}{(p_t/p_s)^{\frac{\gamma-1}{\gamma}} - 1}$$

which, in turn, becomes from equation (17)

$$T_s = \frac{1/\alpha\ (T_o - T_s)}{(p_t/p_s)^{\frac{\gamma-1}{\gamma}} - 1}$$

If the equation is solved for T_s,

$$T_s = \frac{T_o}{1 + \alpha\left[\left(\frac{p_t}{p_s}\right)^{\frac{\gamma-1}{\gamma}} - 1\right]} \tag{18}$$

or

$$T_s \approx T_o\left[1 - \alpha\left(\frac{\gamma - 1}{\gamma}\right)\left(\frac{\Delta p}{p_t}\right)\right] \tag{19}$$

where $\Delta p = p_t - p_s$.

It may be shown from equations (4) and (18) that

$$T_t = \frac{T_o}{1 - (1 - \alpha)\left[1 - \left(\frac{p_s}{p_t}\right)^{\frac{\gamma-1}{\gamma}}\right]} \tag{20}$$

and

$$T_t \approx T_o\left[1 + (1 - \alpha)\left(\frac{\gamma - 1}{\gamma}\right)\left(\frac{\Delta p}{p_t}\right)\right] \tag{21}$$

For all practical purposes, equations (19) and (21) are accurate enough. If c_p and R are given in Btu per $^{\circ}F$ per pound (mass), then, for conversion into absolute units, $Jg\ c_p$ and $Jg\ R$ should be substituted whenever these occur. ($Jg = 778 \times 32.174$ ft-poundals per Btu.) Observed temperatures can be used with little error to determine supercharger parameters if the air velocity does not exceed 200 feet per second in the inlet pipe and 260 feet per second in the outlet pipe. For greater speeds, errors of more than one-half percent will be made in η_{ad} and Q_1/n if the true-stream and total temperatures are not used.

The constant α is determined in wind-tunnel tests. It has been the custom of some laboratories to present the results of the calibration in the form of curves of T_t/T_o and T_s/T_o plotted against the square of the Mach number. The method whereby α is determined from calibration tests and its value subsequently used in equations (19) and (21) is thought to be simpler than the method whereby curves of T_s/T_o and T_t/T_o are used. Before the calibration to determine α is made, an ordinary calibration of the thermocouple and recording device is made by putting the hot junction in a liquid bath and the cold junction in an ice bath. Liquid-in-glass thermometers, accurate to within 0.2° F, are used to determine the hot- and cold-junction temperatures.

Great care should be observed in taking temperature readings. Tests have revealed that differences in readings due to systematic errors of various operators can vitiate the care put into the good construction and calibration of a thermometric device. Test results can be noticeably in error due to this cause.

In the standard test procedure (reference 7), it has been stated that pressure readings shall be taken to 0.05 inch of mercury and temperature readings to within 0.5° F. The NACA has reduced these tolerances in its test work to 0.01 inch of mercury and 0.2° F.

One method of setting the supercharger speed is by means of an electric tachometer. The speed is then checked by means of an electric revolution counter and a stop watch. After the speed is adjusted, a strobotac is set at the same speed and thereafter serves as a visual check that the speed remain fixed when the load is changed. Other methods of measuring speed are used, one laboratory obtaining speed with great accuracy by use of a precision liquid tachometer.

TEST PROCEDURE

A standard test procedure in reference 7 gives satisfactory results. Another test procedure in general use that gives satisfactory results follows:

1. Read temperatures to within 1° F.

2. Read pressures to within 0.1 inch of mercury.

3. Investigate and correct, wherever possible, the cause of disagreement between repeat readings and original readings that do not agree within the given limits.

For each test point,

(a) Adjust speed, air flow, and throttle settings to the desired values.

(b) Wait 5 minutes.

(c) Take a complete set of readings in an established sequence.

(d) Wait until 5 minutes have elapsed from time of start of item (c).

(e) Take another complete set of readings in the established sequence. Use this set of readings in the calculation of performance of the supercharger. Compare the data obtained with the data of item (c) and evaluate the degree of stability or drift for the test point.

(f) Reject or repeat any test point that shows a change in inlet temperature of $\pm 2^{\circ}$ F or of dynamometer speed exceeding ± 10 rpm.

The procedure given in reference 7 is to be preferred because of the shorter time element involved.

COMPUTATION OF SUPERCHARGER PARAMETERS

The true-stream and total temperatures, the pressure coefficients, the adiabatic efficiencies, and the adiabatic shaft efficiencies are calculated from formulas that have been previously derived, the values of the constants in the formulas being given in the Symbols. (See appendix.) The formulas with the constant values inserted have been given in reference 7.

The method of computing the volume of air through the orifice or nozzle placed in front of the supercharger has

been given in reference 7. The weight of air is calculated from the formula

$$W = \frac{p_a \; Q_n}{RT_n} = \frac{p_a \; Q_n}{53.50 \; T_n} \tag{22}$$

The volume of air at the inlet of the supercharger is obtained from the formula

$$Q_1 = \frac{WRT_{1s}}{p_{1s} \; 70.73}$$

or

$$Q_1 = \frac{0.7564 \; W \; T_{1s}}{p_{1s}} \tag{23}$$

since $R = 53.50$.

The gas constants have been obtained from reference 5; normal air is assumed to be air at 68° F with a relative humidity of 36 percent. For tests made during hot humid days, it is possible that the gas constants used will be sufficiently in error to cause an appreciable effect on the test results. The effect of a change in humidity on the gas constants and on several supercharger parameters has been investigated (reference 8). In this report it is shown that the

$$\text{Change in } q_{ad} = 0.000077 \; q_{ad} \; (m - 36.5)$$

$$\text{Change in } \eta_{ad} = -0.000043 \; \eta_{ad} \; (m - 36.5)$$

$$\text{Change in } \frac{Q_1}{n} = 0.000043 \; \frac{Q_1}{n} \; (m - 36.5)$$

$$\text{Change in } \eta_s = -0.000034 \; \eta_s \; (m - 36.5)$$

$$\text{Change in } \left(\frac{p_{2t}}{p_{1t}}\right)_{60} = -0.00015 \left(\frac{\frac{T_{1t}}{519.6} Y}{1 + \frac{T_{1t}}{519.6} Y}\right) \left(\frac{p_{2t}}{p_{1t}}\right)_{60} (m-36.5)$$

where m represents the humidity in grains per pound for the test condition and 36.5 is the humidity in grains per pound for normal air. In general, no correction is made

to the supercharger parameters for a change of humidity but corrections should be made to the parameters for a change of humidity of approximately 55 grains per pound from that for normal air. The parameters are first calculated according to the formulas given herein and corrections are then applied according to the foregoing formulas.

GRAPHICAL METHODS OF PRESENTING SUPERCHARGER RATINGS

The practice at the present time is to present separate charts of q_{ad}, η_{ad}, and η_s for each speed, at various load coefficients. (See figs. 9, 10, and 11.) Thus, if tests are run at speeds of 800, 1100, 1200, and 1300 feet per second, 12 graphs will be required unless two or more speeds may be plotted without confusion on one chart. Usually this saving of space cannot be made because the test points and curves are so close as to cause confusion. (The inclusion of the test points serves to give a rough idea of the reliability of the test curve by the frequency of points along sections of the curve and by their scatter.) The present standard method has the disadvantage, then, that numerous graphs are required and it is therefore difficult to get a general picture of the operation of the supercharger.

Another method of presenting data has been to plot H_{ad} against Q_1 for various values of tip speed and to superimpose upon this chart contour lines of adiabatic efficiency. (No curves of adiabatic shaft efficiency have been plotted in this method.) Thus, one chart could give a complete picture of the operation of the supercharger. Its advantage over the charts using q_{ad} and Q_1/n is that multiplication by the impeller speed spreads out all the curves and makes possible the drawing of intelligible contour curves. A disadvantage of this method is that the effect of T_1 on H_{ad} as predicted by dimensional theory, if the Mach number has little influence on the results, does not check experimental data. This question is being investigated. An example of such a plotting is shown in figure 12.

Contour curves also serve the purpose of determining whether the data for a given curve are in agreement with the data of other curves, because the contour lines should be smooth.

The number of points on each curve for either method should be sufficient to eliminate incorrect fairing of curves due to random error in test data. Special care should be taken to secure enough points to determine correctly the maximum efficiency points of the curves. Ordinarily from 10 to 15 points suffice, but this number depends upon the length and shape of the curve and how the points are distributed.

APPENDIX

SYMBOLS

a local velocity of sound, fps

c_p specific heat of normal air at constant pressure, 189.05 ft-lb/°F/lb (mass), or 6082 ft-poundals/°F/lb (mass)

D impeller diameter, ft

E internal energy per unit mass, ft-poundals/lb (mass)

F Froude number, ratio of inertial force to centrifugal force (Q/nD^3)

g ratio of absolute to gravitational unit of mass, lb/slug (32.174)

H increase in total enthalpy per unit mass, ft-lb/lb (mass), or ft-poundals/lb (mass)

H_{ad} isentropic increase in total enthalpy per unit mass for a given pressure ratio, ft-lb/lb (mass), or ft-poundals/lb (mass)

h enthalpy per unit (mass), ft-poundals/lb (mass)

J mechanical equivalent of heat, ft-lb/Btu (778)

M Mach number, square root of ratio of inertial force to compression force (V/a)

m specific humidity, grains/lb

n angular velocity of impeller, rps

P net shaft power (gross shaft power minus friction power), ft-lb/sec, or ft-poundals/sec

p pressure (obtained from corrected barometric pressure and pressure readings), in. Hg abs.

p_a corrected barometric pressure, total pressure of dry air and water vapor (corrected for temperature), lb/sq ft

Q volume flow, cu ft/sec

q heat lost or gained by 1 pound of gas flowing through supercharger, ft-poundals/lb (mass)

q_{ad} pressure coefficient

R gas constant for normal air, ft-lb/lb (mass)/$^{\circ}$F (53.50)

S entropy, ft-poundals/lb (mass)/$^{\circ}$F

T temperature, $^{\circ}$F abs. ($^{\circ}$F + 459.6)

V impeller tip speed, fps

V_g velocity of fluid, fps

v specific volume of fluid, cu ft/lb

W flow rate, lb/sec

w work done by impeller, ft-poundals/lb (mass)

Y $(p_{2t}/p_{1t})^{\frac{\gamma-1}{\gamma}} - 1$

α recovery coefficient of thermometric device

γ ratio of specific heat at constant pressure to specific heat at constant volume for normal air (1.3947)

Δp kinetic pressure, in. Hg $(p_t - p_s)$

η_{ad} adiabatic temperature-rise ratio or adiabatic effiency

η_s adiabatic shaft efficiency

Q_1/n load coefficient, cu ft/impeller revolution

Subscripts:

1 condition at inlet of supercharger

2 condition at outlet of supercharger

n nozzle or orifice

o observed value

s static or true-stream value (except in symbol η_s)

t total or stagnation value

For example, T_{1s} is the absolute static temperature of the air at the inlet of the supercharger.

Langley Memorial Aeronautical Laboratory,
National Advisory Committee for Aeronautics,
Langley Field, Va.

REFERENCES

1. Joos, Georg: Theoretical Physics. G. E. Stechert & Co. (New York), 1934, p. 479.

2. Capon, R. S., and Brooke, G. V.: The Application of Dimensional Relationships to Air Compressors, with Special Reference to the Variation of Performance with Inlet Conditions. R. & M. No. 1336, British A.R.C., 1930.

3. Smith, Chester W.: Application of Theory of Similitude to Design of Centrifugal Compressors. M.I.T. Thesis, 1929.

4. Glauert, H.: The Elements of Aerofoil and Airscrew Theory. Univ. Press (Cambridge), 1926, pp. 12-14.

5. Moss, Sanford A.: Measurement of Flow of Air and Gas with Nozzles. A.S.M.E. Trans., APM-3, vol. 50, no. 1, Jan.-April 1928, pp. 1-15.

6. Ebaugh, N. C., and Whitfield, R.: The Intake Orifice and a Proposed Method for Testing Exhaust Fans. A.S.M.E. Trans., vol. 56, no. 12, Dec. 1934, pp. 903-911.

7. NACA Subcommittee on Supercharger Compressors: Standard Procedures for Rating and Testing Centrifugal Compressors. NACA ARR No. E5F13, 1945.

8. Ellerbrock, Herman H., Jr., and Goldstein, Arthur W.: Effect of Humidity on Several Supercharger Parameters. NACA ARR, Nov. 1941.

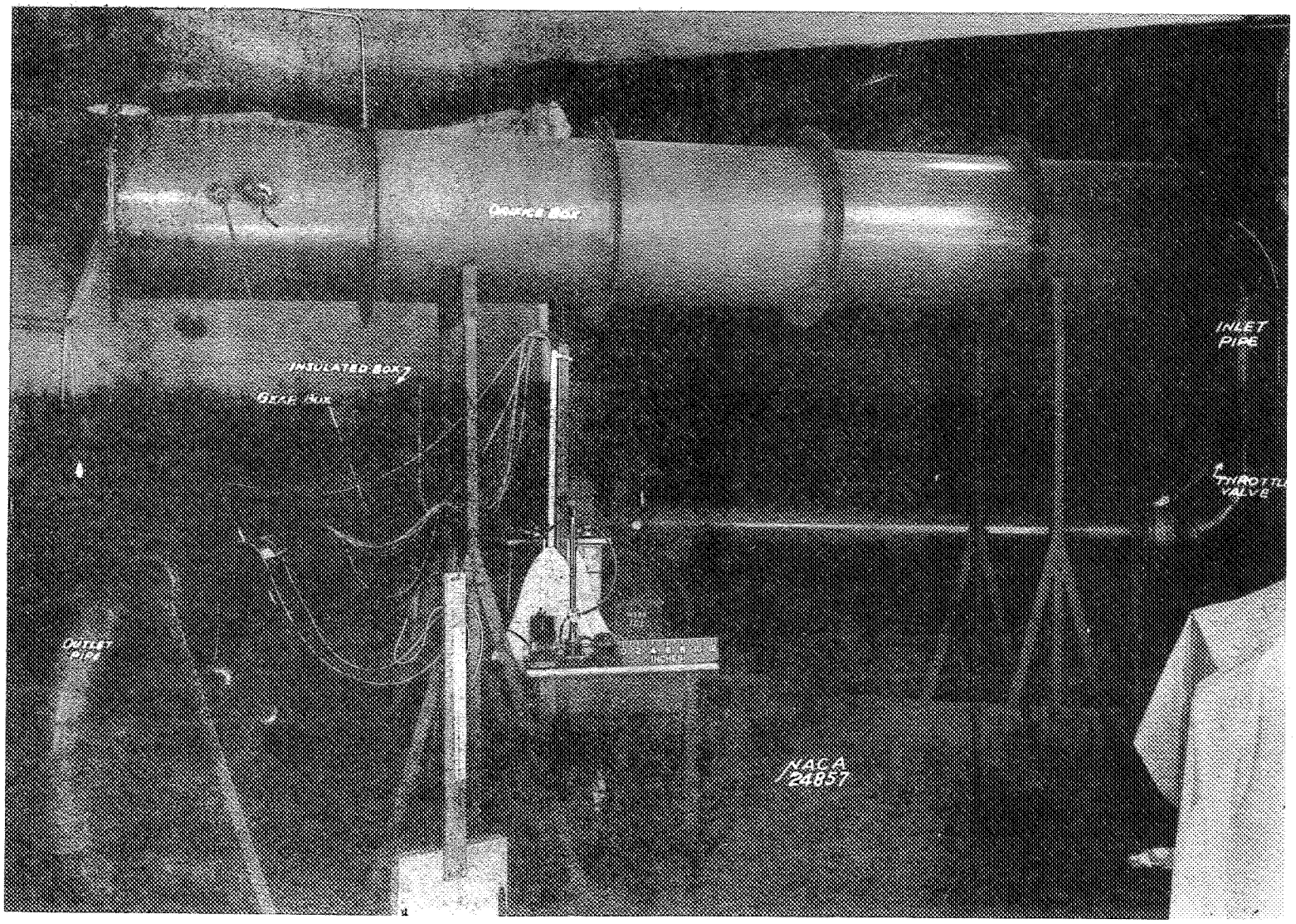

Figure 1.- Side view of variable-component supercharger test rig.

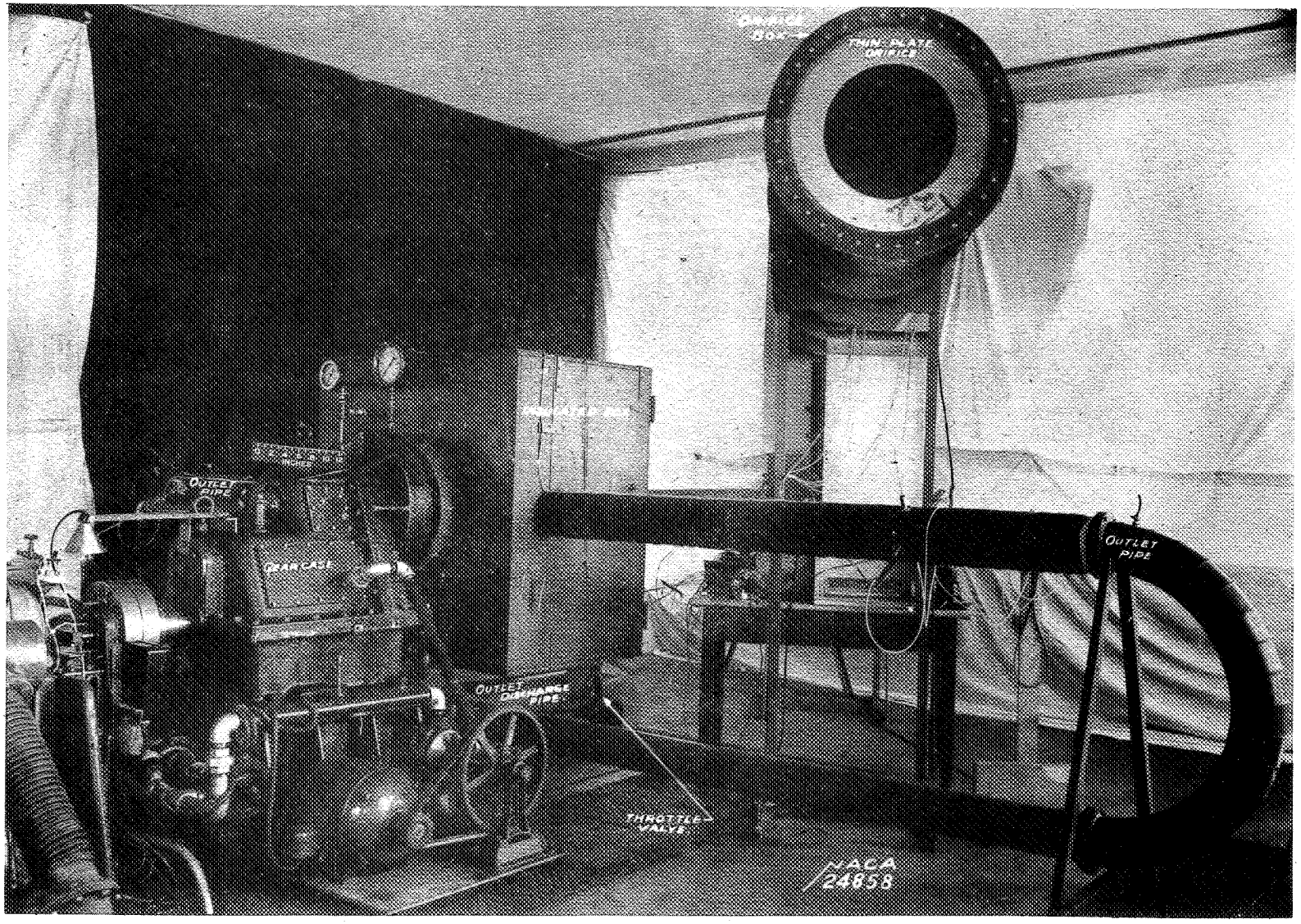

Figure 2 - Rear view of variable-component supercharger test rig.

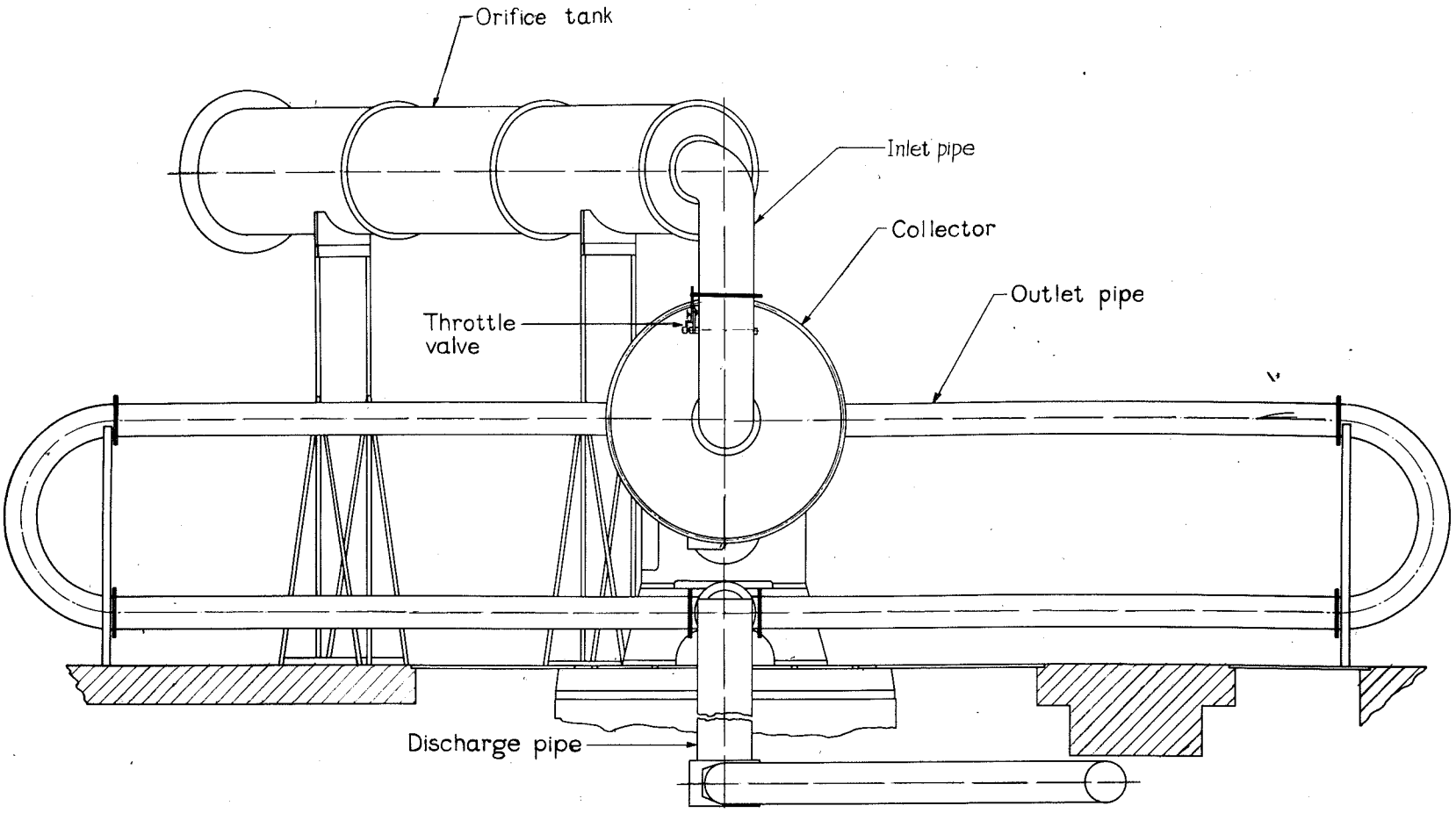

Figure 3 Diagrammatic sketch of front view of variable-component supercharger test rig.

NACA 24908

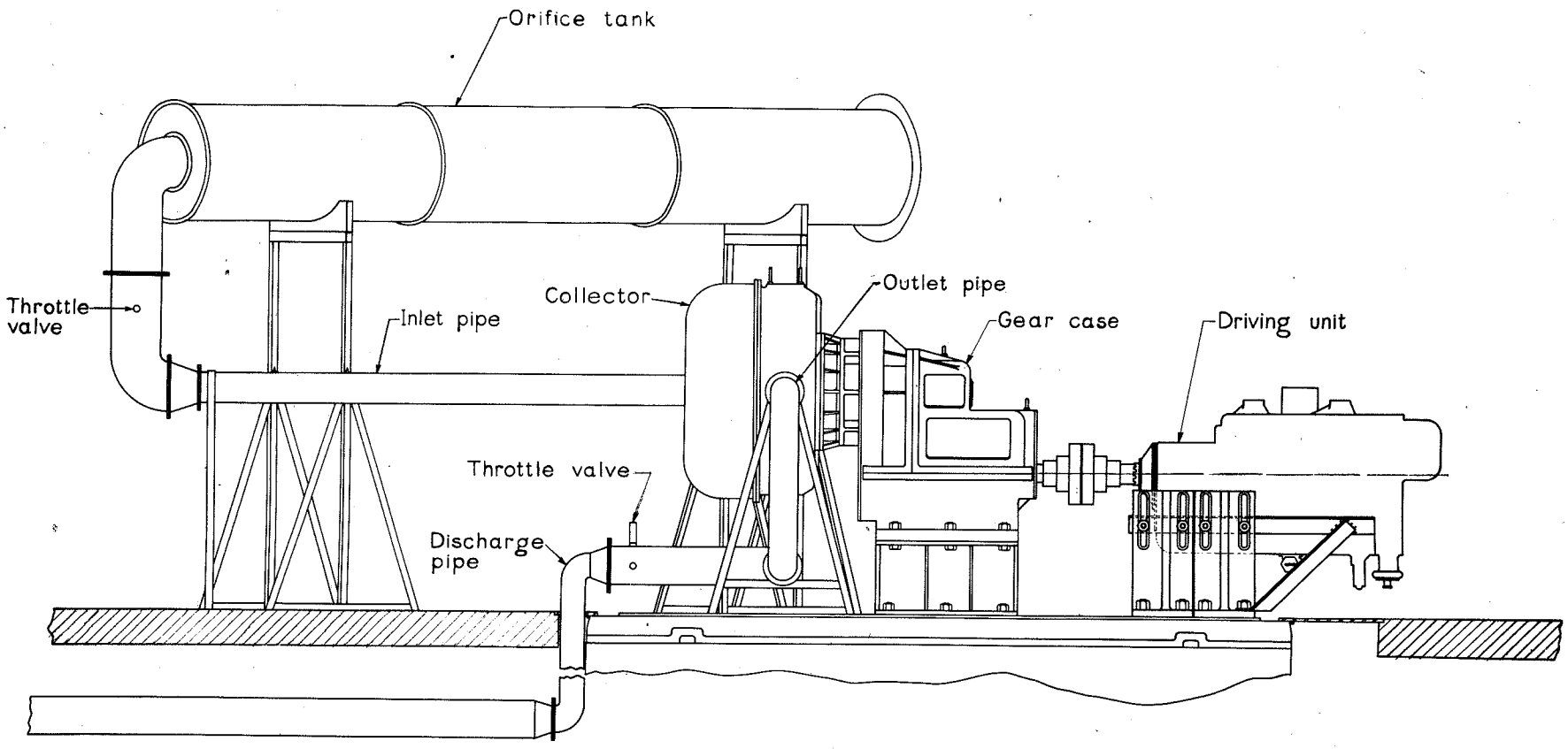

Figure 4 Diagrammatic sketch of side view of variable-component supercharger test rig.

NACA 24907

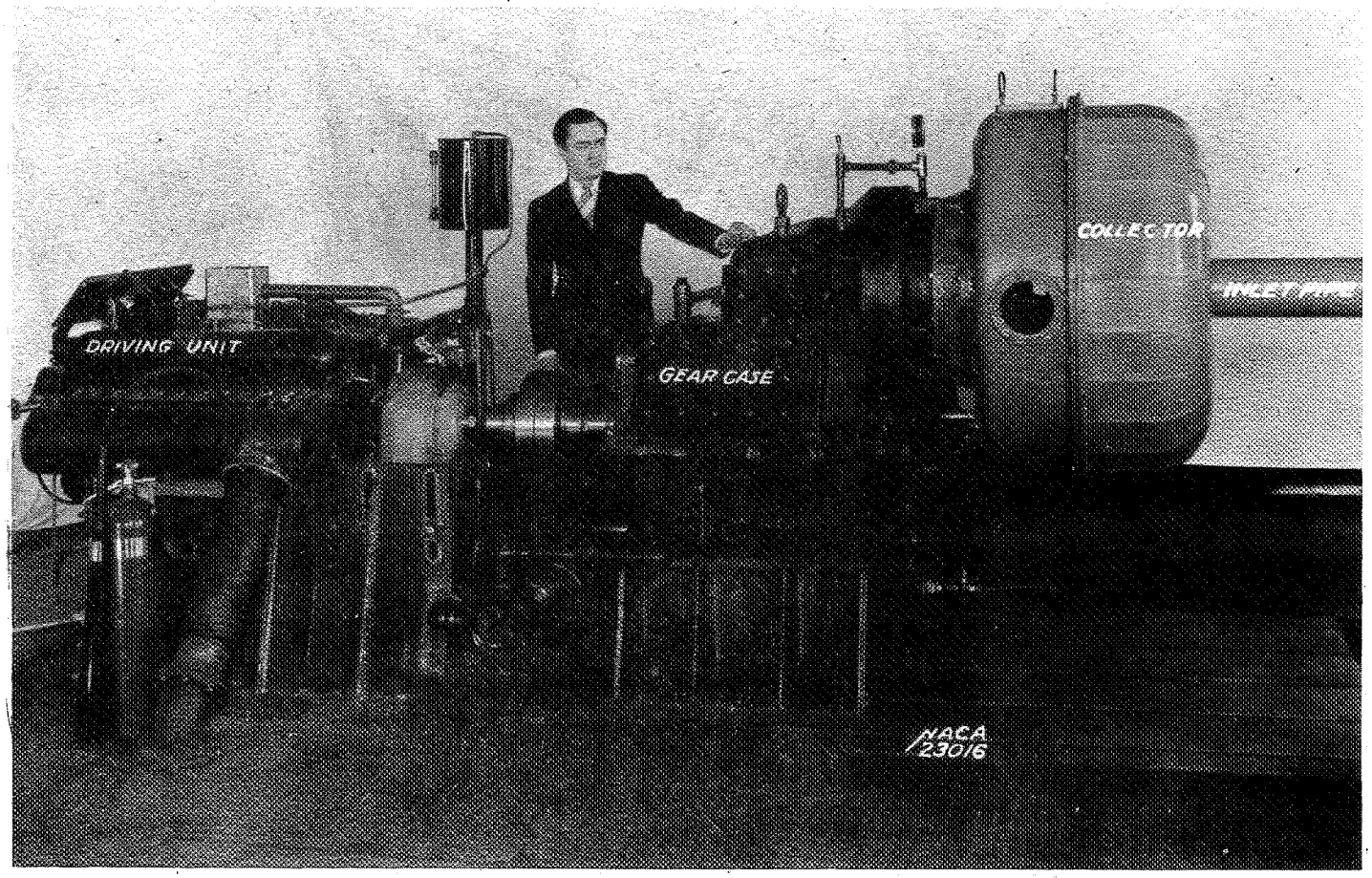

Figure 5 - Side view of variable-component supercharger test rig.

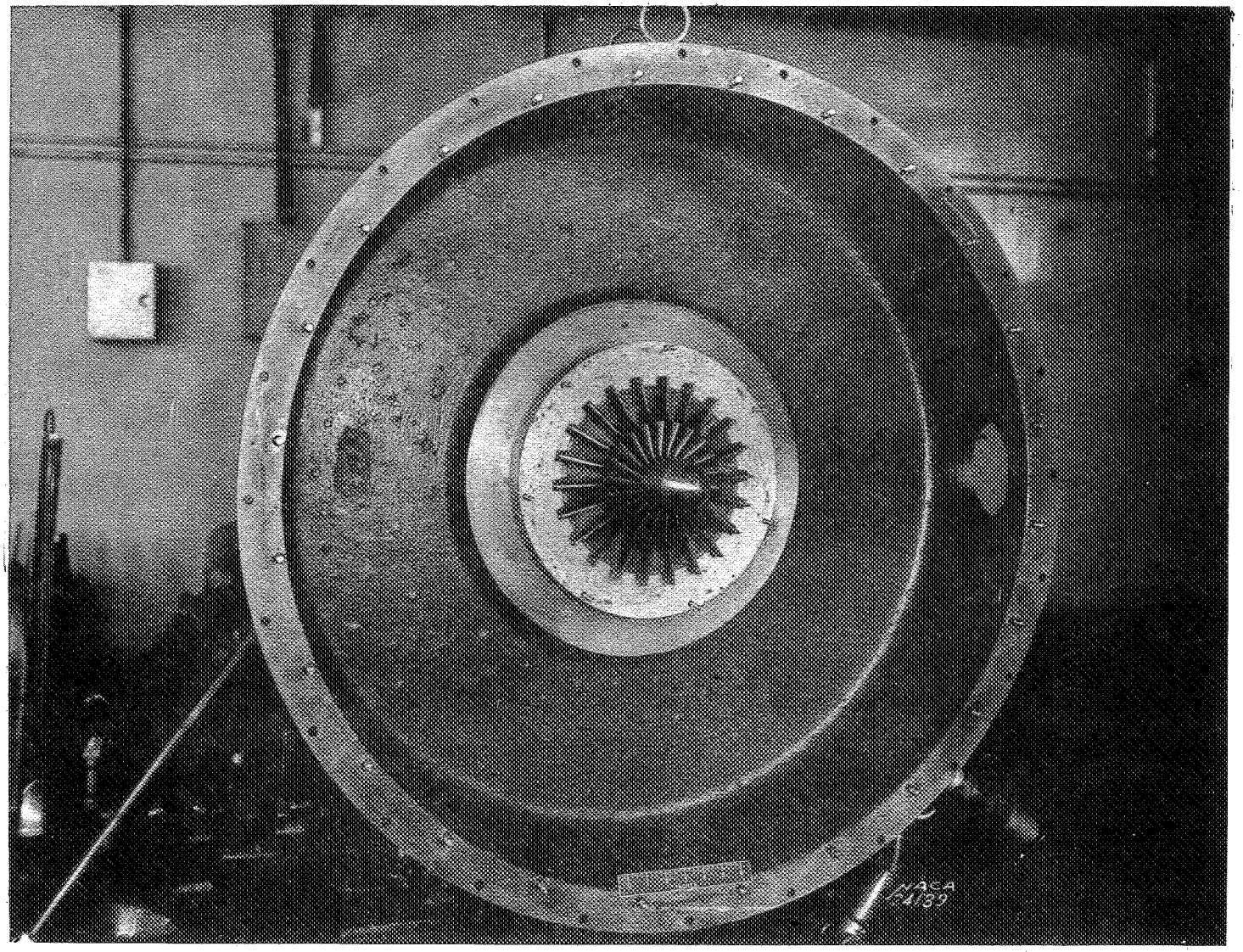

Figure 6 - Rear half of collector showing impeller in position.

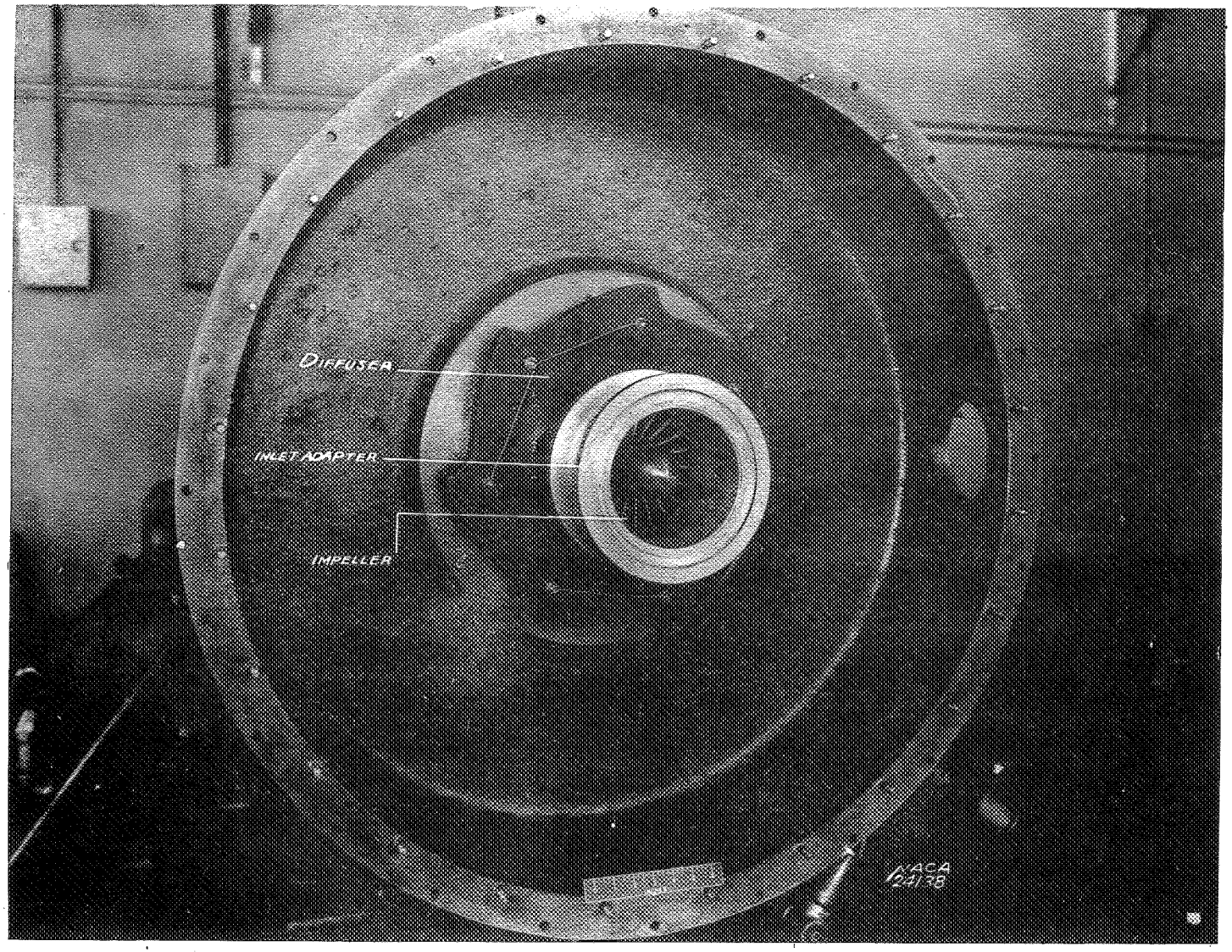

Figure 7.- Rear half of collector showing impeller diffuser, and inlet adapter in position.

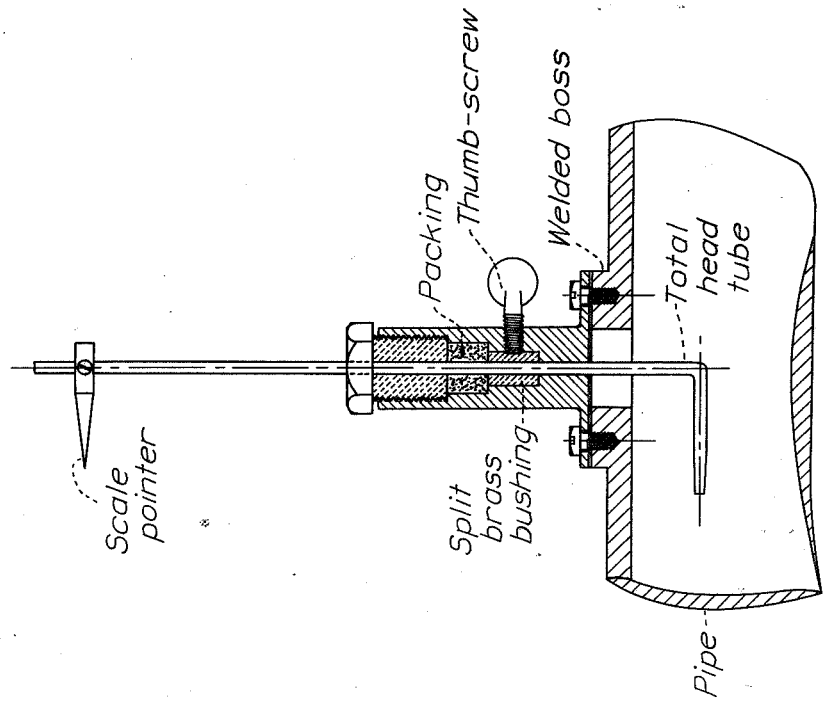

Figure 8. - Total-pressure survey apparatus.

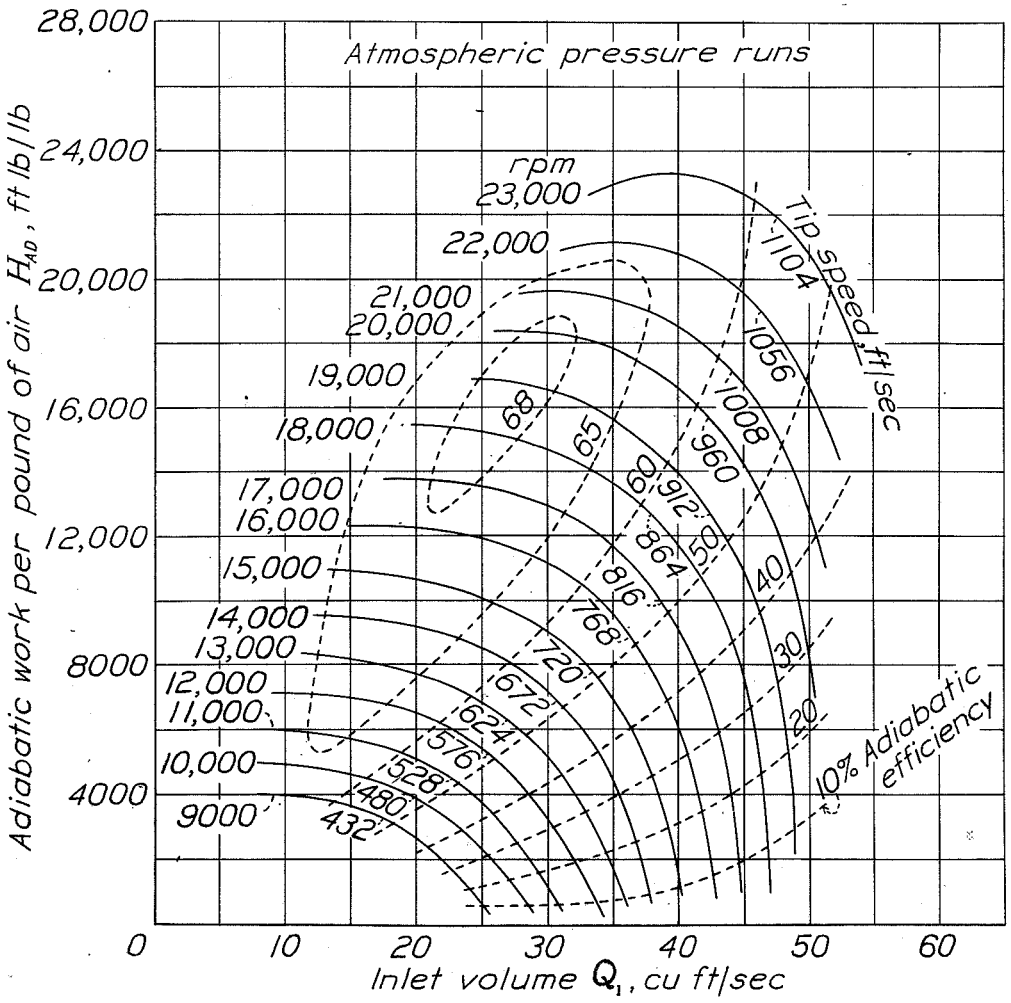

Figure 12. - Characteristics of Pratt & Whitney 1830 supercharger.

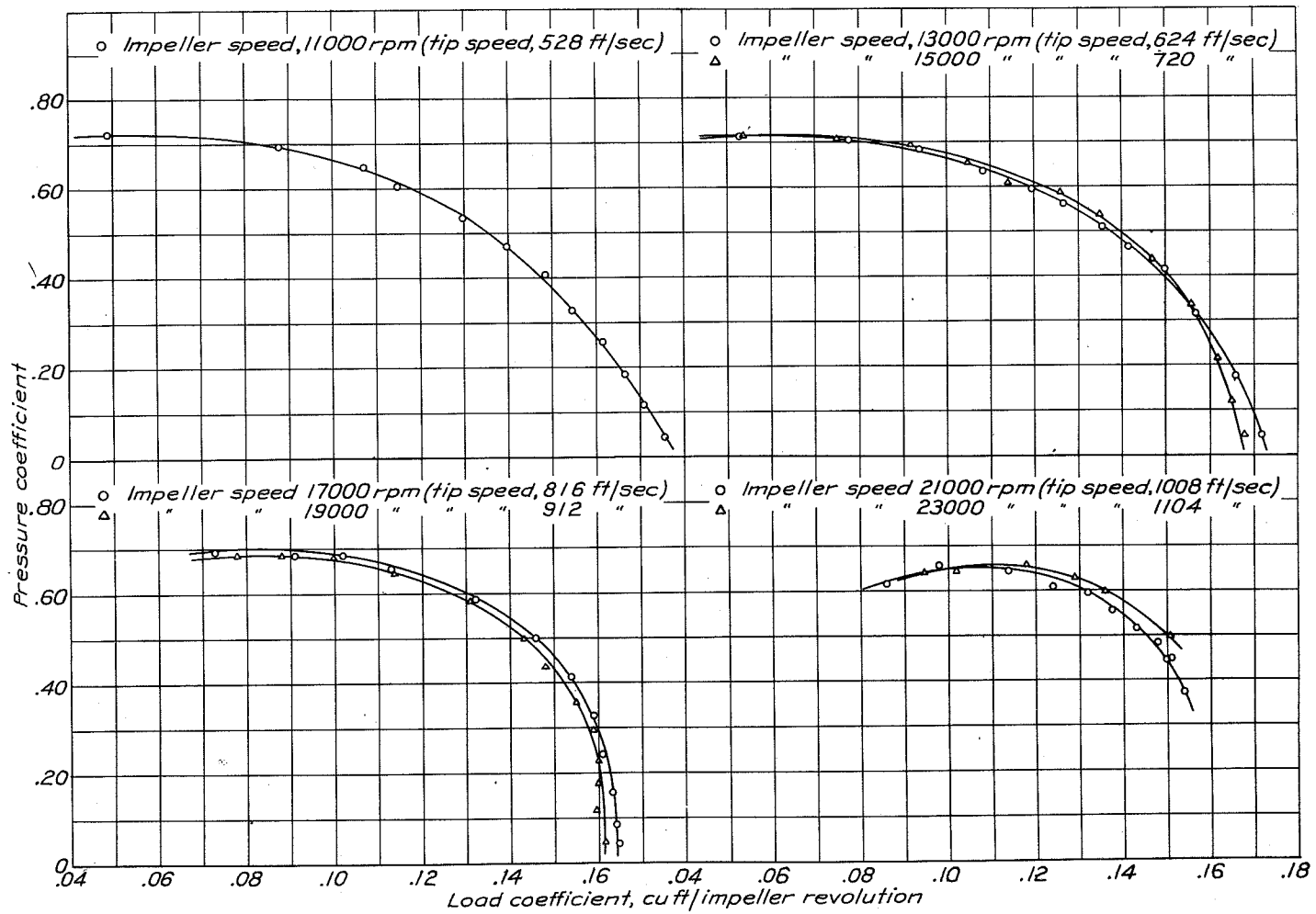

Figure 9 Pressure coefficients of Pratt and Whitney Twin Wasp 1830 supercharger from NACA tests.

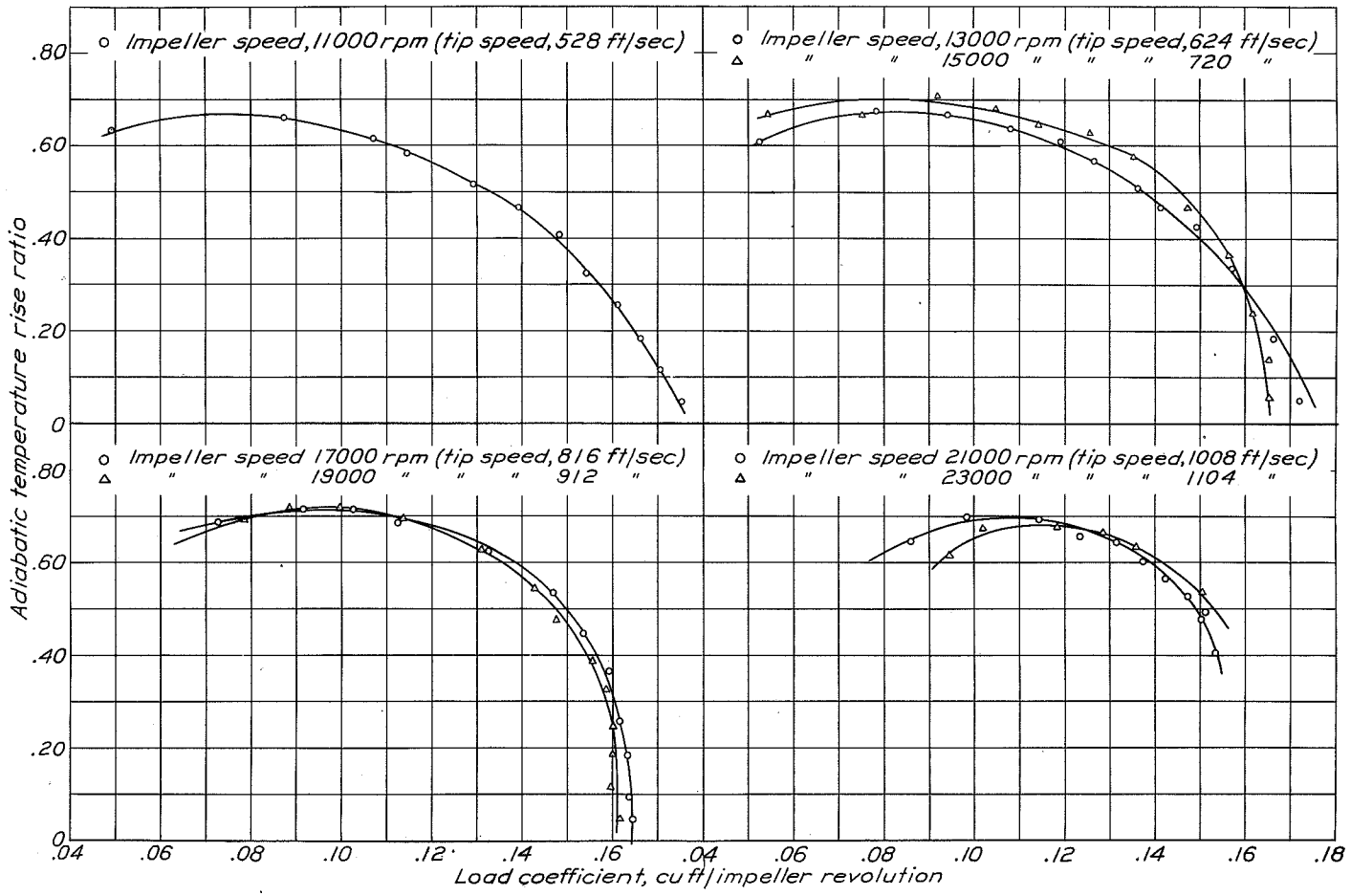

Figure 10.- Adiabatic temperature rise ratios of Pratt and Whitney Twin Wasp 1830 supercharger from NACA tests.

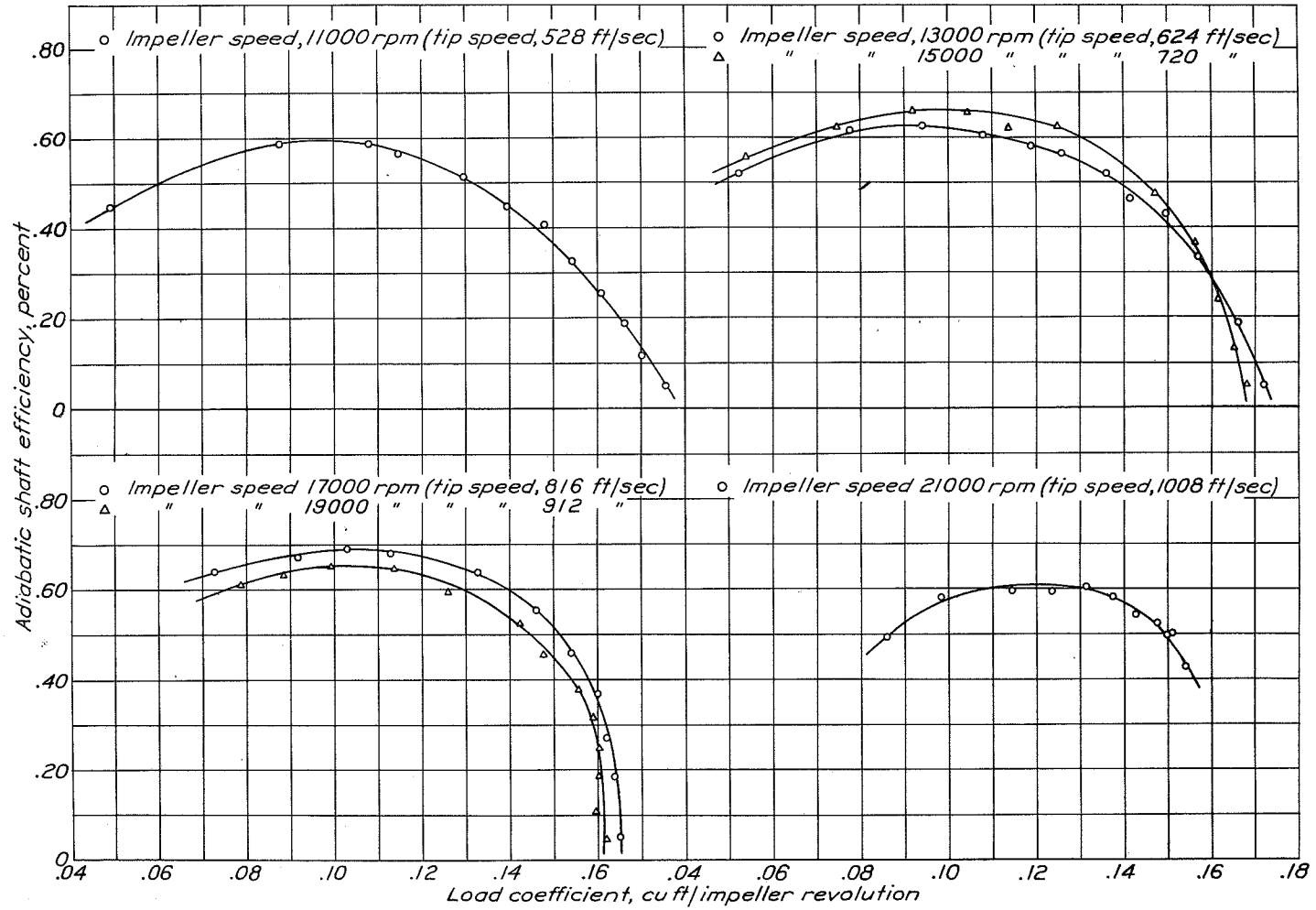

Figure 11 - Adiabatic shaft efficiencies of Pratt and Whitney Twin Wasp 1830 supercharger from NACA tests.

ISDIN FORM 63 (13 MAR 47)

Ellerbrock, H. H.
Goldstein, A. W.

AUTHOR(S)

DIVISION: Power Plants, Reciprocating (6)
SECTION: Induction and Supercharging (2)
CROSS REFERENCES: Superchargers, Centrifugal (91007); Superchargers - Performance (91003); Superchargers - Test equipment (91004.4)

ATI- 7456

ORIG. AGENCY NUMBER
ARR-E-7

REVISION

AMER. TITLE: Principles and methods of rating and testing centrifugal superchargers

FORG'N. TITLE:

ORIGINATING AGENCY: National Advisory Committee for Aeronautics, Washington, D.C.

TRANSLATION:

COUNTRY	LANGUAGE	FORG'N.CLASS	U. S.CLASS.	DATE	PAGES	ILLUS.	FEATURES
U. S.	Eng.		Unclass.	Feb'42	38	11	photos, diagrs, graphs

ABSTRACT

Discussion is presented of standard methods used in rating and testing of supercharger. The rating methods that have been used are based on pressure-producing capacity of supercharger. Test rig used has been designed to determine performance of impeller, diffuser, and collector case as a whole, the duct system necessary in actual installation being neglected. Most successful test procedure is outlined in detail; graphic method of presenting supercharger ratings is given.

NOTE: Requests for copies of this report must be addressed to: N.A.C.A., Washington, D. C.