UNCLASSIFIED

AD NUMBER
ADA800848
CLASSIFICATION CHANGES
TO: **unclassified**
FROM: **restricted**
LIMITATION CHANGES
TO: **Approved for public release; distribution is unlimited.**
FROM: **Distribution authorized to DoD only; Administrative/Operational Use; MAY 1942. Other requests shall be referred to National Aeronautics and Space Administration, Washington, DC. Pre-dates formal DoD distribution statements. Treat as DoD only.**
AUTHORITY
NACA list dtd 28 Sep 1945; NASA TR Server website

THIS PAGE IS UNCLASSIFIED

FILE COPY
NO. 2-W

N 62 52846

CASE FILE
COPY

TECHNICAL NOTES

NATIONAL ADVISORY COMMITTEE FOR AERONAUTICS

No. 846

BENDING OF RECTANGULAR PLATES WITH LARGE DEFLECTIONS

By Samuel Levy
National Bureau of Standards

[redacted]

Washington
May 1942

NATIONAL ADVISORY COMMITTEE FOR AERONAUTICS

TECHNICAL NOTE NO. 846

BENDING OF RECTANGULAR PLATES WITH LARGE DEFLECTIONS

By Samuel Levy

SUMMARY

The solution of von Kármán's fundamental equations for large deflections of plates is presented for the case of a simply supported rectangular plate under combined edge compression and lateral loading. Numerical solutions are given for square plates and for rectangular plates with a width-span ratio of 3:1. The effective widths under edge compression are compared with effective widths according to von Kármán, Bengston, Marguerre, and Cox and with experimental results by Ramberg, McPherson, and Levy. The deflections for a square plate under lateral pressure are compared with experimental and theoretical results by Kaiser. It is found that the effective widths agree closely with Marguerre's formula and with the experimentally observed values and that the deflections agree with the experimental results and with Kaiser's work.

INTRODUCTION

In the design of thin plates that bend under lateral and edge loading, formulas based on the Kirchhoff theory which neglects stretching and shearing in the middle surface are quite satisfactory provided that the deflections are small compared with the thickness. If deflections are of the same order as the thickness, the Kirchhoff theory may yield results that are considerably in error and a more rigorous theory that takes account of deformations in the middle surface should therefore be applied. The fundamental equations for the more exact theory have been derived by von Kármán (reference 1); a number of approximate solutions (references 2 to 7) have been developed for the case of a rectangular plate. This paper presents a solution of von Kármán's equations in terms of trigonometric series.

Acknowledgment is due to the National Advisory Committee for Aeronautics and the Bureau of Aeronautics,

Navy Department, whose research projects on sheet-stringer panels have provided the impetus and the necessary financial support for the work presented in this paper. The author takes this opportunity to acknowledge also the assistance of members of the Engineering Mechanics Section of the National Bureau of Standards, particularly Dr. Walter Ramberg, Mr. Phillip Krupen, and Mr. Samuel Greenman.

FUNDAMENTAL EQUATIONS

Symbols

An initially flat rectangular plate of uniform thickness will be considered. The symbols have the following significance:

a plate length in x-direction

b plate length in y-direction

h plate thickness

p_z normal pressure

w vertical displacement of points of the middle surface

E Young's modulus

μ Poisson's ratio

x,y coordinate axes with origin at corner of plate

$D = \dfrac{Eh^3}{12(1 - \mu^2)}$, flexural rigidity of the plate

F stress function

Subscripts k, m, n, p, q, r, s, and t represent integers.

Tensile loads, stresses, and strains will be given as positive values and compressive loads, stresses, and strains will be designated by a negative sign.

Equations for the Deformation of Thin Plates

The fundamental equations governing the deformation of thin plates were developed by von Kármán in reference 1. They are given by Timoshenko (reference 4, pp. 322-323) in essentially the following form:

$$\frac{\partial^4 F}{\partial x^4} + 2\frac{\partial^4 F}{\partial x^2 \partial y^2} + \frac{\partial^4 F}{\partial y^4} = E\left[\left(\frac{\partial^2 w}{\partial x \partial y}\right)^2 - \frac{\partial^2 w}{\partial x^2}\frac{\partial^2 w}{\partial y^2}\right] \tag{1}$$

$$\frac{\partial^4 w}{\partial x^4} + 2\frac{\partial^4 w}{\partial x^2 \partial y^2} + \frac{\partial^4 w}{\partial y^4} = \frac{p_z}{D} + \frac{h}{D}\left(\frac{\partial^2 F}{\partial y^2}\frac{\partial^2 w}{\partial x^2} + \frac{\partial^2 F}{\partial x^2}\frac{\partial^2 w}{\partial y^2} - 2\frac{\partial^2 F}{\partial x \partial y}\frac{\partial^2 w}{\partial x \partial y}\right) \tag{2}$$

where the median-fiber stresses are

$$\sigma'_x = \frac{\partial^2 F}{\partial y^2}, \qquad \sigma'_y = \frac{\partial^2 F}{\partial x^2}, \qquad \tau'_{x,y} = -\frac{\partial^2 F}{\partial x \partial y} \tag{3}$$

and the median-fiber strains are

$$\left.\begin{aligned} \epsilon'_x &= \frac{1}{E}\left(\frac{\partial^2 F}{\partial y^2} - \mu\frac{\partial^2 F}{\partial x^2}\right) \\ \epsilon'_y &= \frac{1}{E}\left(\frac{\partial^2 F}{\partial x^2} - \mu\frac{\partial^2 F}{\partial y^2}\right) \\ \gamma'_{x,y} &= -\frac{2(1+\mu)}{E}\frac{\partial^2 F}{\partial x \partial y} \end{aligned}\right\} \tag{4}$$

The extreme-fiber bending and shearing stresses are

$$\left.\begin{aligned} \sigma''_x &= -\frac{Eh}{2(1-\mu^2)}\left(\frac{\partial^2 w}{\partial x^2} + \mu\frac{\partial^2 w}{\partial y^2}\right) \\ \sigma''_y &= -\frac{Eh}{2(1-\mu^2)}\left(\frac{\partial^2 w}{\partial y^2} + \mu\frac{\partial^2 w}{\partial x^2}\right) \\ \tau''_{x,y} &= -\frac{Eh}{2(1+\mu)}\frac{\partial^2 w}{\partial x \partial y} \end{aligned}\right\} \tag{5}$$

General Solution for Simply Supported Rectangular Plate

A solution of equations (1) and (2) for a simply supported rectangular plate must satisfy the following boundary conditions. The deflection w and the edge bending moment per unit length are zero at the edges of the plate,

$$m_x = -D\left(\frac{\partial^2 w}{\partial x^2} + \mu\frac{\partial^2 w}{\partial y^2}\right) = 0, \quad \text{when} \quad x = 0,\ x = a$$

$$m_y = -D\left(\frac{\partial^2 w}{\partial y^2} + \mu\frac{\partial^2 w}{\partial x^2}\right) = 0, \quad \text{when} \quad y = 0,\ y = b$$

These conditions are satisfied by the Fourier series

$$w = \sum_{m=1,2,3\ldots}^{\infty} \sum_{m=1,2,3\ldots}^{\infty} w_{m,n} \sin m\frac{\pi x}{a} \sin n\frac{\pi y}{b} \tag{6}$$

The normal pressure may be expressed as a Fourier series

$$p_z = \sum_{r=1,2,3\ldots}^{\infty} \sum_{s=1,2,3\ldots}^{\infty} p_{r,s} \sin r\frac{\pi x}{a} \sin s\frac{\pi y}{b} \tag{7}$$

By substitution equation (1) is found to be satisfied if

$$F = -\frac{\overline{p}_x y^2}{2} - \frac{\overline{p}_y x^2}{2} + \sum_{p=0,1,2\ldots}^{\infty} \sum_{q=0,1,2\ldots}^{\infty} b_{p,q} \cos p\frac{\pi x}{a} \cos q\frac{\pi y}{b} \tag{8}$$

where $\overline{p}_x$, $\overline{p}_y$ are constants equal to the average membrane pressure in the x- and the y-direction (see equation (3)) and where

$$b_{p,q} = \frac{E}{4\left(p^2\frac{b}{a} + q^2\frac{a}{b}\right)^2}\left(B_1+B_2+B_3+B_4+B_5+B_6+B_7+B_8+B_9\right)$$

and

$$B_1 = \sum_{k=1}^{p-1} \sum_{t=1}^{q-1} \left[kt(p-k)(q-t) - k^2(q-t)^2 \right] w_{k,t} w_{(p-k),(q-t)}$$

if $q \neq 0$ and $p \neq 0$

$B_1 = 0$, if $q = 0$ or $p = 0$

$$B_2 = \sum_{k=1}^{\infty} \sum_{t=1}^{q-1} \left[kt(k+p)(q-t) + k^2(q-t)^2 \right] w_{k,t} w_{(k+p),(q-t)}$$

if $q \neq 0$

$B_2 = 0$, if $q = 0$

$$B_3 = \sum_{k=1}^{\infty} \sum_{t=1}^{q-1} \left[(k+p)(t)(k)(q-t) + (k+p)^2(q-t)^2 \right] w_{(k+p),t} w_{k,(q-t)}$$

if $q \neq 0$ and $p \neq 0$

$B_3 = 0$, if $q = 0$ or $p = 0$

$$B_4 = \sum_{k=1}^{p-1} \sum_{t=1}^{\infty} \left[kt(p-k)(t+q) + k^2(t+q)^2 \right] w_{k,t} w_{(p-k),(t+q)}$$

if $p \neq 0$

$B_4 = 0$, if $p = 0$

$$B_5 = \sum_{k=1}^{p-1} \sum_{t=1}^{\infty} \left[k(t+q)(p-k)t + k^2 t^2 \right] w_{k,(t+q)} w_{(p-k),t}$$

if $q \neq 0$ and $p \neq 0$

$B_5 = 0$, if $q = 0$ or $p = 0$

$$B_6 = \sum_{k=1}^{\infty} \sum_{t=1}^{\infty} \left[kt(k+p)(t+q) - k^2(t+q)^2 \right] w_{k,t} w_{(k+p),(t+q)}$$

if $q \neq 0$

$B_6 = 0$, if $q = 0$

$$B_7 = \sum_{k=1}^{\infty} \sum_{t=1}^{\infty} \left[k(t+q)(k+p)t - k^2t^2 \right] w_{k,(t+q)} w_{(k+p),t}$$

$$\text{if} \quad q \neq 0 \quad \text{and} \quad p \neq 0$$

$$B_7 = 0, \quad \text{if} \quad q = 0 \quad \text{or} \quad p = 0$$

$$B_8 = \sum_{k=1}^{\infty} \sum_{t=1}^{\infty} \left[(k+p)tk(t+q) - (k+p)^2(t+q)^2 \right] w_{(k+p),t} w_{k,(t+q)}$$

$$\text{if} \quad q \neq 0 \quad \text{or} \quad p \neq 0$$

$$B_8 = 0, \quad \text{if} \quad q = 0 \quad \text{and} \quad p = 0$$

$$B_9 = \sum_{k=1}^{\infty} \sum_{t=1}^{\infty} \left[(k+p)(t+q)kt - (k+p)^2t^2 \right] w_{(k+p),(t+q)} w_{k,t}$$

$$\text{if} \quad p \neq 0$$

$$B_9 = 0, \quad \text{if} \quad p = 0$$

Equation (2) is satisfied if

$$p_{r,s} = Dw_{r,s} \left(r^2 \frac{\pi^2}{a^2} + s^2 \frac{\pi^2}{b^2} \right)^2 - \overline{p}_x h w_{r,s} r^2 \frac{\pi^2}{a^2} - \overline{p}_y h w_{r,s} s^2 \frac{\pi^2}{b^2}$$

$$+ \frac{h\pi^4}{4a^2b^2} \left\{ - \sum_{k=1}^{r} \sum_{t=1}^{s} \left[(s-t)k - (r-k)t \right]^2 b_{(r-k),(s-t)} w_{k,t} \right.$$

$$- \sum_{k=0}^{\infty} \sum_{t=0}^{\infty} \left[t(k+r) - k(t+s) \right]^2 b_{k,t} w_{(k+r),(t+s)}$$

$$+ \sum_{k=0}^{\infty} \sum_{t=1}^{\infty} \left[(k+r)(t+s) - kt \right]^2 b_{k,(t+s)} w_{(k+r),t}$$

$$+ \sum_{k=1}^{\infty} \sum_{t=0}^{\infty} \left[tk - (k+r)(t+s) \right]^2 b_{(k+r),t} w_{k,(t+s)}$$

$$- \sum_{k=1}^{\infty} \sum_{t=1}^{\infty} \left[(t+s)k - (k+r)t \right]^2 b_{(k+r),(t+s)} w_{k,t}$$

$$- \sum_{k=1}^{r} \sum_{t=0}^{\infty} \left[tk + (r-k)(t+s) \right]^2 b_{(r-k),t} w_{k,(t+s)}$$

$$+ \sum_{k=1}^{r} \sum_{t=1}^{\infty} \left[(t+s)k+(r-k)t\right]^2 b_{(r-k),(t+s)} w_{k,t}$$

$$- \sum_{k=0}^{\infty} \sum_{t=1}^{s} \left[(s-t)(k+r)+tk\right]^2 b_{k,(s-t)} w_{(k+r),t}$$

$$\left. + \sum_{k=1}^{\infty} \sum_{t=1}^{s} \left[(s-t)k+t(k+r)\right]^2 b_{(k+r),(s-t)} w_{k,t} \right\} \qquad (9)$$

SPECIFIC SOLUTION FOR SQUARE PLATE WITH SYMMETRICAL NORMAL PRESSURE (μ = 0.316)

Equation (9) represents a doubly infinite family of equations. In each of the equations of the family the coefficients $b_{p,q}$ may be replaced by their values as given by equation (8). The resulting equations will involve the known normal pressure coefficients $p_{r,s}$, the cubes of the deflection coefficients $w_{m,n}$, and the known average membrane pressures in the x- and the y-directions $\overline{p}_x$ and $\overline{p}_y$, respectively. The number of these equations is equal to the number of unknown deflection coefficients $w_{m,n}$.

In the solution of the following problems, the first six equations of the family of equation (9) that do not reduce to the indeterminate form 0 = 0 will be used to solve for the first six deflection coefficients $w_{1,1}$, $w_{1,3}$, $w_{3,1}$, $w_{3,3}$, $w_{1,5}$, and $w_{5,1}$. The rest of the deflection coefficients will be assumed to be zero. This assumption of a finite number of coefficients introduces an error into the solution. In each problem the magnitude of this error will be checked by comparing results as the number of equations used in the solution is increased from one to six.

The resultant load must be constant in the x- and in the y-direction and the boundaries of the plate must remain straight. The first condition follows directly from the substitution of equations (3) and (8) in the following expressions for the total load:

$$\left.\begin{aligned} \text{Load in x-direction} &= \int_0^b h\,\sigma'_x dy = -\,\overline{p}_x bh \\ \text{Load in y-direction} &= \int_0^a h\,\sigma'_y dx = -\,\overline{p}_y ah \end{aligned}\right\} \tag{10}$$

The second condition was checked by the substitution of equations (4), (6), and (8) in the following equations:

$$\text{Displacement of edges in x-direction} = \int_0^a \left[\epsilon'_x - \frac{1}{2}\left(\frac{\partial w}{\partial x}\right)^2\right] dx$$

$$= -\frac{\overline{p}_x a}{E} + \mu\frac{\overline{p}_y a}{E} - \frac{\pi^2}{8a}\sum_{m=1}^{\infty}\sum_{n=1}^{\infty} m^2 w_{m,n}^2 \tag{11}$$

$$\text{Displacement of edges in y-direction} = \int_0^b \left[\epsilon'_y - \frac{1}{2}\left(\frac{\partial w}{\partial y}\right)^2\right] dy$$

$$= -\frac{\overline{p}_y b}{E} + \mu\frac{\overline{p}_x b}{E} - \frac{\pi^2}{8b}\sum_{m=1}^{\infty}\sum_{n=1}^{\infty} n^2 w_{m,n}^2 \tag{12}$$

Equations (10) to (12) are independent of x and y, thus showing that the conditions of constant load and constant edge displacement are satisfied by equations (6) and (8).

The stress coefficients $b_{p,q}$ obtained from equation (8) for a square plate $a = b$ are given in table I. Poisson's ratio was chosen as $\mu = \sqrt{0.1} = 0.316$ for convenience of computation and because it is characteristic of aluminum alloys. Substitution of these stress coefficients in equation (9) gives the equations in table II relating the pressure coefficients $p_{r,s}$, the average membrane pressures in the x- and the y-directions $\overline{p}_x$ and $\overline{p}_y$, and the deflection coefficients $w_{m,n}$. As an example of the use of table II, the first few terms in the first equation are

$$0 = -\frac{a^4 p_{1,1}}{\pi^4 E h^4} + 0.37\,\frac{w_{1,1}}{h} - \frac{\overline{p}_x a^2}{\pi^2 E h^2}\,\frac{w_{1,1}}{h} - \frac{\overline{p}_y a^2}{\pi^2 E h^2}\,\frac{w_{1,1}}{h}$$

$$+ 0.125\left(\frac{w_{1,1}}{h}\right)^3 - 0.1875\left(\frac{w_{1,1}}{h}\right)^2 \frac{w_{1,3}}{h} - \ldots \qquad (13)$$

It will be noted that the equations in table II are cubics and therefore their solution gives three values for each of the deflection coefficients $w_{m,n}$. Some of these values correspond to stable equilibrium, while the remaining values are either imaginary or correspond to unstable equilibrium. Fortunately, if the equations in table I are solved by a method of successive approximation, the successive approximations will converge on a solution corresponding to stable equilibrium.

Edge Compression in One Direction, Square Plate

The following results apply to square plates loaded by edge compression in the x-direction as shown in figure 1.

The normal pressure p_z and the edge compression in the y-direction $\overline{p}_y ah$ are zero. The method of obtaining a solution of the equations in table II for this case consists of assuming values of $\frac{w_{1,1}}{h}$ and determining by successive approximation from their respective equations the corresponding values of $\frac{p_x a^2}{Eh^2}$, $\frac{w_{1,3}}{h}$, $\frac{w_{3,1}}{h}$, $\frac{w_{3,3}}{h}$, $\frac{w_{1,5}}{h}$, and $\frac{w_{5,1}}{h}$. These calculations have been made for 16 values of $\frac{w_{1,1}}{h}$ increasing by increments of 0.25 from 0 to 4.00; the results are given in table III and figure 2.

The membrane stress coefficients were computed from table I and table III with the results given in table IV. The membrane stresses for the corner of the plate, the centers of the edges, and the center of the plate were then computed from equation (3) and equation (8) with the results given in figure 3. At the maximum load computed, the membrane stress at the corner is almost three times the average compressive stress $\overline{p}_x$.

The extreme-fiber bending and shearing stresses for the center and the corners of the plate were computed from equations (5), equation (6), and table III with the results given in figure 4. At the maximum load computed, the bending produces a maximum extreme-fiber stress at the corners of the plate. This stress is directed at 45° to the x and the y axes and has a value of about $1\frac{1}{2}$ times the average median-fiber compression $\overline{p}_x$.

The ratio of the effective width to the initial width (defined as the ratio of the actual load carried by the plate to the load the plate would have carried if the stress had been uniform and equal to the Young's modulus times the average edge strain) was computed from equation (11) and table III with the results given in figure 5. At the maximum load computed, the average edge strain is 13.5 times the critical strain and the ratio of the effective width to the initial width is 0.434.

As a measure of the error resulting from the use of only six of the equations in the foregoing solution, the results obtained by using one, three, four, and six of the equations of the family of equation (9) are given in table V. The convergence is rapid and the same result is obtained with four equations as with six equations.

Uniform Normal Pressure, Square Plate, Edge Compression Zero

The following results apply to square plates loaded by a uniform normal pressure as shown in figure 6.

Poisson's ratio μ is assumed to be 0.316. The edge compressions in the x-direction $\overline{p}_x ah$ and in the y-direction $\overline{p}_y ah$ are zero. The uniform normal pressure is p. The expansion of this pressure in a Fourier series as shown in equation (7) gives pressure coefficients $p_{r,s} = \frac{1}{rs}\left(\frac{4}{\pi}\right)^2 p$. The method of obtaining a solution of the equations in table II for this case consists of assuming values of $\frac{w_{1,1}}{h}$ and determining by successive approximation from their respective equations the corresponding values of $\frac{pa^4}{Eh^4}$, $\frac{w_{1,3}}{h}$, $\frac{w_{3,1}}{h}$, $\frac{w_{3,3}}{h}$, $\frac{w_{1,5}}{h}$, and $\frac{w_{5,1}}{h}$. These

calculations have been made for eight values of $\frac{w_{1,1}}{h}$ increasing by increments of 0.50 from 0 to 4.00 with the results given in table VI and figure 7.

The membrane stress coefficients have been computed from table I and table VI with the results given in table VII. The membrane stresses have been computed from table VII, equations (3), and equation (8) for the corner of the plate, the centers of the edges, and the center of the plate with the results given in figure 8. The compressive membrane stress at the corner of the plate is seen to exceed consistently the tensile membrane stress at the center.

The extreme-fiber bending stresses have been computed from equations (5), equation (6), and table VI for the center and the corners of the plate with the results given in figure 9. Comparison of figures 8 and 9 shows that the ratio of membrane stresses to extreme-fiber bending or shearing stresses increases rapidly with increasing pressure. The two types of stresses are of the same order of magnitude at $\frac{pa^4}{Eh^4} = 400$.

As a measure of the rapidity of convergence, the results obtained by solving with one, three, and six equations of the family of equation (9) are given in table VIII. The convergence of the value of the pressure is rapid and monotonic. In the case of the center deflection, the convergence, however, is oscillatory. For small pressures the amplitude of oscillation rapidly decreases (reference 4, p. 316). For larger pressures the decrease in amplitude of oscillation is less rapid, as is indicated by table VIII(b), but an estimate of the asymptotic value may be obtained by noting that this value, if it exists, must lie between the value at any particular maximum (minimum) and the average of that maximum (minimum) with the preceding minimum (maximum). Since the next four equations in the series, giving $\frac{w_{1,7}}{h}$, $\frac{w_{7,1}}{h}$, $\frac{w_{3,5}}{h}$, and $\frac{w_{5,3}}{h}$ will cause a decrease in $\frac{w_{center}}{h}$, the correct value of $\frac{w_{center}}{h}$ must lie between 2.704 (the average of 2.666 and 2.743) and 2.743 when $\frac{pa^4}{Eh^4} = 247$. At higher values of $\frac{pa^4}{Eh^4}$, it may be necessary to use the first ten equations

of the family of equation (9) to get a solution accurate to within 1 percent for center deflection.

Uniform Normal Pressure, Square Plate, Edge Displacement Zero

The following results apply to square plates loaded by a uniform normal pressure as shown in figure 10. Poisson's ratio μ is assumed to be 0.316. The average edge tensions in the x- and the y-directions $-\overline{p}_x$ and $\overline{p}_y$ are obtained from equations (11) and (12) by setting the edge displacement equal to zero.

$$-\frac{\overline{p}_x a^2}{Eh^2} + \mu \frac{\overline{p}_y a^2}{Eh^2} = \frac{\pi^2}{8} \sum_{m,n}^{\infty} m^2 \left(\frac{w_{m,n}}{h}\right)^2$$

$$-\frac{\overline{p}_y a^2}{Eh^2} + \mu \frac{\overline{p}_x a^2}{Eh^2} = \frac{\pi^2}{8} \sum_{m,n}^{\infty} n^2 \left(\frac{w_{m,n}}{h}\right)^2$$

The average tensions $-\overline{p}_x$ and $-\overline{p}_y$ are then substituted in the equations of table II, a value of $\frac{w_{1,1}}{h}$ is assumed and the corresponding values of $\frac{pa^4}{Eh^4}$, $\frac{w_{1,3}}{h}$, $\frac{w_{3,1}}{h}$, $\frac{w_{3,3}}{h}$, $\frac{w_{1,5}}{h}$, and $\frac{w_{5,1}}{h}$ are determined by successive approximation from their respective equations. These calculations have been made for four values of $\frac{w_{1,1}}{h}$ increasing by increments of 0.50 from 0 to 2.00 with the results given in table IX and figure 11.

The membrane stress coefficients have been computed from table I and table IX with the results given in table X. The membrane stresses have been computed from table X, equations (3), and equation (8) for the corner of the plate, the centers of the edges, and the center of the plate; the results are given in figure 12. The tensile membrane stress at the center of the edge is seen to be slightly greater than the tensile membrane stress at the center.

The extreme-fiber bending stresses have been computed from equations (5), equation (6), and table IX for the center and the corners of the plate with the results given in figure 13. Comparison of figures 12 and 13 indicates that bending and membrane stresses at the center of the plate are approximately the same at the maximum loads considered.

As a measure of the rapidity of convergence, the results obtained by using one, three, and six equations of the family of equation (9) are given in table XI. The convergence of the value of the pressure is both rapid and monotonic. In the case of the center deflection, the convergence is oscillatory. For small pressures, this oscillation decreased rapidly (reference 4, p. 316). For larger pressures the decrease in amplitude of oscillation is less rapid, as is indicated by table XI(b), but an estimate of the asymptotic value may be obtained by noting that this value, if it exists, must lie between the value at any particular maximum (minimum) and the average of that maximum (minimum) with the preceding minimum (maximum). Since the next four equations for $\frac{w_{1,7}}{h}$, $\frac{w_{7,1}}{h}$, $\frac{w_{3,5}}{h}$, $\frac{w_{5,3}}{h}$ will cause a decrease in $\frac{w_{center}}{h}$, the correct value of $\frac{w_{center}}{h}$ must lie between 1.827 (average of 1.807 and 1.846) and 1.846 when $\frac{pa^4}{Eh^4} = 278.5$. At higher values of $\frac{pa^4}{Eh^4}$ it may be necessary to use the first ten equations of the family of equation (9) to get a solution accurate to within 1 percent for center deflection.

Combined Uniform Lateral Pressure and Edge Compression in One Direction, Square Plate

The following results apply to square plates with simply supported edges loaded by a uniform normal pressure p and by edge compression in the x-direction as shown in figure 1.

Poisson's ratio μ is again assumed to be 0.316. The edge compression in the y-direction $\overline{p}_y ah$ is zero. The method of obtaining a solution of the equations in table II for this case consists of assuming values of $\frac{pa^4}{Eh^4}$ and

$\frac{w_{1,1}}{h}$ and determining by successive approximations from their respective equations the corresponding values of $\frac{\overline{p}_x a^2}{Eh^2}$, $\frac{w_{1,3}}{h}$, $\frac{w_{3,1}}{h}$, $\frac{w_{3,3}}{h}$, $\frac{w_{1,5}}{h}$, and $\frac{w_{5,1}}{h}$. These calculations have been made for two values of $\frac{pa^4}{Eh^4}$, 2.25, and 29.5 and for five values of $\frac{w_{1,1}}{h}$, and hence of $\frac{\overline{p}_x a^2}{Eh^2}$, corresponding to each value of $\frac{pa^4}{Eh^4}$; the results are given in table XII.

The ratio of effective width to initial width has been computed from equation (11) and table XII with the results given in the last two columns of table XII and in figure 14. The reduction in effective width of square plates due to the addition of lateral load is seen to be appreciable for $\frac{pa^4}{Eh^4} > 2.25$.

As a measure of the convergence, the results obtained by using one, three, four, and six of the equations in table II are given in table XIII. The convergence is rapid and monotonic.

SPECIFIC SOLUTION FOR A RECTANGULAR PLATE (a = 3b) WITH NORMAL PRESSURE SYMMETRICAL TO AXES OF PLATE

The first two equations of the family of equation (9) for the case of a rectangular plate whose length is three times its width (a = 3b) are, for $\mu = 0.316$.

$$\left.\begin{aligned}
\frac{b^4 p_{1,1}}{\pi^4 E h^4} &= 0.1142\,\frac{w_{1,1}}{h} - \frac{\overline{p}_x b^2}{9\pi^2 E h^2}\,\frac{w_{1,1}}{h} - \frac{\overline{p}_y b^2}{\pi^2 E h^2}\,\frac{w_{1,1}}{h} \\
&+ 0.0632\left(\frac{w_{1,1}}{h}\right)^3 - 0.1873\left(\frac{w_{1,1}}{h}\right)^2\frac{w_{3,1}}{h} + 0.267\,\frac{w_{1,1}}{h}\left(\frac{w_{3,1}}{h}\right)^2 \\
\frac{b^4 p_{3,1}}{\pi^4 E h^4} &= 0.370\,\frac{w_{3,1}}{h} - \frac{\overline{p}_x b^2}{\pi^2 E h^2}\,\frac{w_{3,1}}{h} - \frac{\overline{p}_y b^2}{\pi^2 E h^2}\,\frac{w_{3,1}}{h} \\
&- 0.0625\left(\frac{w_{1,1}}{h}\right)^3 + 0.267\left(\frac{w_{1,1}}{h}\right)^2\frac{w_{3,1}}{h} + 0.125\left(\frac{w_{3,1}}{h}\right)^3
\end{aligned}\right\}\quad(14)$$

In the previous solutions a close approximation was obtained with one equation as long as $\frac{w_{center}}{h} < 1$. For this reason, in the following problem only the first two equations, as given by equation (14), will be used and the deflections will be limited to values of $\frac{w_{center}}{h} < 1$. It should be noted that the two equations of (14) will be adequate only as long as the normal pressure can be described by the first two terms of equation (7):

$$p_z = p_{1,1}\sin\frac{\pi x}{a}\sin\frac{\pi y}{b} + p_{3,1}\sin\frac{3\pi x}{a}\sin\frac{\pi y}{b}$$

For more complicated pressure distributions as well as for $\frac{w_{center}}{h} > 1$, more equations of the family of equation (9) should be used.

The following results apply to rectangular plates $(a = 3b)$ loaded by a uniform lateral pressure p and by edge compression acting on the shorter edges as shown in figure 15.

Poisson's ratio μ is taken as 0.316. The edge compression in the y-direction $\overline{p}_y ah$ is zero. The coefficients $p_{r,s}$ in the Fourier series for the pressure as given in equation (7) equal $\frac{1}{rs}\left(\frac{4}{\pi}\right)^2 p$. The method of obtaining a solution of equations (14) for this case con-

sists of assuming values of $\frac{pb^4}{Eh^4}$ and $\frac{w_{3,1}}{h}$ and determining by successive approximation from their respective equations the corresponding values of $\frac{w_{1,1}}{h}$ and $\frac{\bar{p}_x b^2}{Eh^2}$. These calculations have been made for 13 values of $\frac{pb^4}{Eh^4}$ and $\frac{w_{3,1}}{h}$ with the results given in table XIV. The ratio of effective width to initial width was computed from equation (11) and table XIV, with the results given in the last two columns of table XIV and in figure 16. The reduction in effective width of rectangular plates ($a = 3b$) due to the addition of lateral load is seen to be less than in the case of square plates (fig. 14).

COMPARISON WITH APPROXIMATE FORMULAS

Effective Width

Approximate formulas for effective width have been derived in references 2, 3, 6, and 7.

Marguerre (reference 2) expresses the deflection for a square plate by a series similar to equation (6). He limits himself, however, to $w_{1,1}$, $w_{3,1}$, and $w_{3,3}$ and in his numerical work requires that $w_{3,3} = -\frac{1}{2} w_{3,1}$ and that $\mu = 0$. His stress function corresponds to the first terms of equation (8). He uses the energy principle to determine the values of $w_{1,1}$ and $w_{3,1}$ instead of the differential equation given as equation (2) in the present work. Marguerre's approximate solution is given as curve c in figure 17. It is evident that, even though Marguerre has limited the number of his arbitrary parameters to two and has taken $\mu = 0$, his results are in excellent agreement with the results obtained in the present paper. Marguerre's approximate formula $b_e/b = \sqrt[3]{\epsilon_{cr}/\epsilon}$ is given as curve b. This curve checks within about 7 percent with the exact results.

Bengston (reference 3) assumes a sinusoidal deflection equivalent to the first term in equation (6) in his solution for a square plate. He then chooses his displace-

ments so that the strain at the supported edges is uniform but, in order to do so, he violates equation (1). Owing to the method of choosing the displacements, however, the resulting errors should be small. The energy principle is then used to obtain the solution. In order to take account of secondary buckling, it is assumed that buckling of 1/3 and 1/9 the original wave length will occur independently and that the resulting effective width will be the product of each of the separate effective widths. Finally, an envelope curve to the effective widths thus constructed is drawn. This curve is given as curve d in figure 17. It differs less than 7 percent from the effective widths obtained in this paper. The fact that Bengston's values are lower indicates that the increased strength which should result from the conditions of uniform strain at the edges is lost due to the approximate method of taking account of secondary buckling.

The well-known formula of von Kármán (see reference 7) $b_e/b = \sqrt{\epsilon_{cr}/\epsilon}$ is plotted as curve a in figure 17. It is in good agreement with the effective widths obtained in this paper for small values of the ratio ϵ/ϵ_{cr} but is about 20 percent low for $\epsilon/\epsilon_{cr} = 4$.

Cox (reference 6) in his solution for the simply supported square plate uses energy methods together with the approximation that the strain is uniform along the entire length of a narrow element of the panel. The effective-width curve thus obtained is plotted in figure 17 as curve e. It gives effective widths 10 to 20 percent below those obtained in this paper.

Deflection under Lateral Pressure

Navier's solution for the simply supported square plate with small deflections (linear theory), given in reference 9, is included in figures 7, 9, 11, and 13. It is seen that for small deflections the solution given in this paper is in agreement with Navier's linear theory.

Kaiser (reference 5) converted von Kármán's differential equations into difference equations and calculated deflections and stresses for a square plate under constant pressure assuming simple support at the edges with zero membrane stress. He obtained $\frac{w_{center}}{h} = 2.47$ for

$\frac{pa^4}{Eh^4} = 118.8$. This center deflection is about 25 percent higher than the curve in figure 7; this difference is probably due to the fact that Kaiser allows distortion of the edges of the plate. The membrane stresses calculated by Kaiser are about one-fifth as large as those given in the present paper. This fact, as well as a comparison of figures 8 and 12, indicates the large influence of edge conditions on the membrane stresses.

COMPARISON WITH EXPERIMENTAL RESULTS

Effective Width

Extensive experiments on two aluminum-alloy sheet-stringer panels 16 inches wide, 19 inches long, and 0.070 and 0.025 inch in thickness are reported in reference 8. The sheet of the 0.070-inch panel was 24S-T alclad aluminum-alloy and the 0.025-inch panel was 24S-T aluminum-alloy sheet. The panels were reinforced by stringers (0.13 sq in. in area) spaced 4 inches on centers. Deflection curves measured at the time of the experiments indicated that in the panel having 0.025-inch sheet the torsional stiffness of the stringers was large enough compared with the stiffness of the sheet to provide appreciable restraint against rotation at the edges; in the case of the 0.070-inch alclad aluminum-alloy panel the stringers approximated a condition of simple support.

The effective widths resulting from these experiments are plotted in figure 18 using for ϵ_{cr} the buckling strain of a simply supported square plate. It is evident that in the case of the 0.070-inch alclad aluminum-alloy specimen the agreement is excellent up to stresses for which yielding due to the combined bending and membrane stresses was probably taking place. In the case of the 0.025-inch aluminum-alloy specimen the observed effective width exceeded the calculated values for $\epsilon/\epsilon_{cr} < 7$ but the agreement was excellent for $\epsilon/\epsilon_{cr} > 7$, which appeared to be large enough to reduce the effect of the torsional stiffness of the stringers as a factor in the edge conditions.

Deflection under Lateral Pressure

Kaiser (reference 5) has conducted a carefully controlled experiment on one simply supported plate. In this experiment, as in Kaiser's theoretical work, the edge conditions are such that the membrane stresses at the edge are zero. The initial deflections obtained by Kaiser are in agreement with the results in this paper. At large deflections, however, the fact that the membrane stress at the edge of the plate was zero in the experiment causes the measured deflections to exceed by appreciable amounts the deflections calculated in this paper.

National Bureau of Standards,
Washington, D. C., May 27, 1941.

REFERENCES

1. von Kármán, Th.: Festigkeitsprobleme in Maschinenbau. Vol. IV of Encyk. der Math. Wiss., 1910, p. 349.

2. Marguerre, Karl: The Apparent Width of the Plate in Compression. T.M. No. 833, NACA, 1937.

3. Bengston, Henry W.: Ship Plating under Compression and Hydrostatic Pressure. Trans. Soc. Naval Arch. and Marine Eng., vol. 47, Nov. 1939, pp. 80-116.

4. Timoshenko, S.: Theory of Elastic Stability. McGraw-Hill Book Co., Inc., 1936.

5. Kaiser, Rudolf: Rechnerische und experimentelle Ermittlung der Durchbiegungen und Spannungen von quadratischen Platten bei freier Auflagerung an den Rändern, gleichmässig verteilter Last und grossen Ausbeigungen. Z.f.a.M.M., Bd. 16, Heft 2, April 1936, pp. 73-98.

6. Cox, H. L.: The Buckling of Thin Plates in Compression. R. & M. No. 1554, British A.R.C., 1933.

7. von Kármán, Theodor, Sechler, Ernest E., and Donnell, L. H.: The Strength of Thin Plates in Compression. A.S.M.E. Trans., APM-54-5, vol. 54, no. 2, Jan. 30, 1932, pp. 53-57.

8. Ramberg, Walter, McPherson, Albert E., and Levy, Sam: Experimental Study of Deformation and of Effective Width in Axially Loaded Sheet-Stringer Panels. T.N. No. 634, NACA, 1939.

9. Timoshenko, S.: Theory of Plates and Shells. McGraw-Hill Book Co., Inc., 1940, pp. 117-120.

TABLE I.- EQUATIONS FOR THE STRESS COEFFICIENTS IN EQUATION (8) FOR A SQUARE PLATE (a = b)

$\frac{4\pi^2 b_{0,2}}{Eh^2} = \frac{\pi^2}{8}\left[\left(\frac{w_{1,1}}{h}\right)^2 - 2\left(\frac{w_{1,1}}{h}\frac{w_{1,3}}{h}\right) + 9\left(\frac{w_{3,1}}{h}\right)^2 - 18\left(\frac{w_{3,1}}{h}\frac{w_{3,3}}{h}\right) - 2\left(\frac{w_{1,3}}{h}\frac{w_{1,5}}{h}\right) + 25\left(\frac{w_{5,1}}{h}\right)^2\right]$	
$\frac{4\pi^2 b_{2,0}}{Eh^2} = \frac{\pi^2}{8}\left[\left(\frac{w_{1,1}}{h}\right)^2 - 2\left(\frac{w_{1,1}}{h}\frac{w_{3,1}}{h}\right) + 9\left(\frac{w_{1,3}}{h}\right)^2 - 18\left(\frac{w_{1,3}}{h}\frac{w_{3,3}}{h}\right) - 2\left(\frac{w_{3,1}}{h}\frac{w_{5,1}}{h}\right) + 25\left(\frac{w_{1,5}}{h}\right)^2\right]$	
$\frac{16\pi^2 b_{0,4}}{Eh^2} = \frac{\pi^2}{4}\left[\left(\frac{w_{1,1}}{h}\frac{w_{1,3}}{h}\right) + 9\left(\frac{w_{3,1}}{h}\frac{w_{3,3}}{h}\right) - \left(\frac{w_{1,1}}{h}\frac{w_{1,5}}{h}\right)\right]$	
$\frac{16\pi^2 b_{4,0}}{Eh^2} = \frac{\pi^2}{4}\left[\left(\frac{w_{1,1}}{h}\frac{w_{3,1}}{h}\right) + 9\left(\frac{w_{1,3}}{h}\frac{w_{3,3}}{h}\right) - \left(\frac{w_{1,1}}{h}\frac{w_{5,1}}{h}\right)\right]$	
$\frac{4\pi^2 b_{2,2}}{Eh^2} = \frac{\pi^2}{4}\left[\frac{w_{1,1}}{h}\left(\frac{w_{3,1}}{h} + \frac{w_{1,3}}{h}\right) + 4\left(\frac{w_{1,3}}{h}\frac{w_{1,5}}{h}\right) + 4\left(\frac{w_{3,1}}{h}\frac{w_{5,1}}{h}\right) - 4\left(\frac{w_{3,1}}{h}\frac{w_{1,3}}{h}\right) - 9\left(\frac{w_{3,3}}{h}\right)\left(\frac{w_{1,5}}{h} + \frac{w_{5,1}}{h}\right)\right]$	
$\frac{36\pi^2 b_{0,6}}{Eh^2} = \frac{\pi^2}{8}\left[\left(\frac{w_{1,3}}{h}\right)^2 + 9\left(\frac{w_{3,3}}{h}\right)^2 + 2\left(\frac{w_{1,1}}{h}\frac{w_{1,5}}{h}\right)\right.$	$\left.\frac{36\pi^2 b_{6,0}}{Eh^2} = \frac{\pi^2}{8}\left(\frac{w_{3,1}}{h}\right)^2 + 9\left(\frac{w_{3,3}}{h}\right)^2 + 2\left(\frac{w_{1,1}}{h}\frac{w_{5,1}}{h}\right)\right]$
$\frac{16\pi^2 b_{2,4}}{Eh^2} = \frac{\pi^2}{25}\left[-\left(\frac{w_{1,1}}{h}\frac{w_{1,3}}{h}\right) + 9\left(\frac{w_{1,1}}{h}\frac{w_{3,3}}{h}\right) + 25\left(\frac{w_{1,3}}{h}\frac{w_{3,1}}{h}\right) + 9\left(\frac{w_{1,1}}{h}\frac{w_{1,5}}{h}\right) - 49\left(\frac{w_{3,1}}{h}\frac{w_{1,5}}{h}\right) + 81\left(\frac{w_{3,3}}{h}\frac{w_{5,1}}{h}\right)\right]$	
$\frac{16\pi^2 b_{4,2}}{Eh^2} = \frac{\pi^2}{25}\left[-\left(\frac{w_{1,1}}{h}\frac{w_{3,1}}{h}\right) + 9\left(\frac{w_{1,1}}{h}\frac{w_{3,3}}{h}\right) + 25\left(\frac{w_{1,3}}{h}\frac{w_{3,1}}{h}\right) + 9\left(\frac{w_{1,1}}{h}\frac{w_{5,1}}{h}\right) - 49\left(\frac{w_{1,3}}{h}\frac{w_{5,1}}{h}\right) + 81\left(\frac{w_{3,3}}{h}\frac{w_{1,5}}{h}\right)\right]$	
$\frac{64\pi^2 b_{0,8}}{Eh^2} = \frac{\pi^2}{4}\left(\frac{w_{1,3}}{h}\frac{w_{1,5}}{h}\right)$	$\frac{64\pi^2 b_{8,0}}{Eh^2} = \frac{\pi^2}{4}\left(\frac{w_{3,1}}{h}\frac{w_{5,1}}{h}\right)$
$\frac{36\pi^2 b_{2,6}}{Eh^2} = \frac{9\pi^2}{100}\left[9\left(\frac{w_{1,3}}{h}\frac{w_{3,3}}{h}\right) - \left(\frac{w_{1,1}}{h}\frac{w_{1,5}}{h}\right) + 16\left(\frac{w_{3,1}}{h}\frac{w_{1,5}}{h}\right)\right]$	
$\frac{36\pi^2 b_{6,2}}{Eh^2} = \frac{9\pi^2}{100}\left[9\left(\frac{w_{3,1}}{h}\frac{w_{3,3}}{h}\right) - \left(\frac{w_{1,1}}{h}\frac{w_{5,1}}{h}\right) + 16\left(\frac{w_{1,3}}{h}\frac{w_{5,1}}{h}\right)\right]$	
$\frac{16\pi^2 b_{4,4}}{Eh^2} = \frac{\pi^2}{4}\left[-\left(\frac{w_{1,3}}{h}\frac{w_{3,1}}{h}\right) + 4\left(\frac{w_{1,3}}{h}\frac{w_{5,1}}{h}\right) + 4\left(\frac{w_{3,1}}{h}\frac{w_{1,5}}{h}\right) - 9\left(\frac{w_{1,5}}{h}\frac{w_{5,1}}{h}\right)\right]$	
$\frac{100\pi^2 b_{0,10}}{Eh^2} = \frac{\pi^2}{8}\left(\frac{w_{1,5}}{h}\right)^2$	$\frac{100\pi^2 b_{10,0}}{Eh^2} = \frac{\pi^2}{8}\left(\frac{w_{5,1}}{h}\right)^2$
$\frac{64\pi^2 b_{2,8}}{Eh^2} = \frac{4\pi^2}{289}\left[-\left(\frac{w_{1,3}}{h}\frac{w_{1,5}}{h}\right) + 81\left(\frac{w_{3,3}}{h}\frac{w_{1,5}}{h}\right)\right]$	$\frac{64\pi^2 b_{8,2}}{Eh^2} = \frac{4\pi^2}{289}\left[-\left(\frac{w_{3,1}}{h}\frac{w_{5,1}}{h}\right) + 81\left(\frac{w_{3,3}}{h}\frac{w_{5,1}}{h}\right)\right]$
$\frac{36\pi^2 b_{4,6}}{Eh^2} = \frac{9\pi^2}{676}\left[-9\left(\frac{w_{1,3}}{h}\frac{w_{3,3}}{h}\right) - 49\left(\frac{w_{3,1}}{h}\frac{w_{1,5}}{h}\right) + 169\left(\frac{w_{1,5}}{h}\frac{w_{5,1}}{h}\right)\right]$	
$\frac{36\pi^2 b_{6,4}}{Eh^2} = \frac{9\pi^2}{676}\left[-9\left(\frac{w_{3,1}}{h}\frac{w_{3,3}}{h}\right) - 49\left(\frac{w_{1,3}}{h}\frac{w_{5,1}}{h}\right) + 169\left(\frac{w_{1,5}}{h}\frac{w_{5,1}}{h}\right)\right]$	
$\frac{64\pi^2 b_{4,8}}{Eh^2} = -\frac{9\pi^2}{25}\left(\frac{w_{3,3}}{h}\frac{w_{1,5}}{h}\right)$	$\frac{64\pi^2 b_{8,4}}{Eh^2} = -\frac{9\pi^2}{25}\left(\frac{w_{3,3}}{h}\frac{w_{5,1}}{h}\right)$
$\frac{36\pi^2 b_{6,6}}{Eh^2} = -\pi^2\left(\frac{w_{1,5}}{h}\frac{w_{5,1}}{h}\right)$	

TABLE II.- COEFFICIENTS FOR SQUARE PLATE IN THE FIRST SIX EQUATIONS OF THE FAMILY OF EQUATION (9)

[μ = 0.316]

	0 =	0 =	0 =	0 =	0 =	0 =
$\frac{a^4}{\pi^4 E h^4}$	$-p_{1,1}$	$-p_{1,3}$	$-p_{3,1}$	$-p_{3,3}$	$-p_{1,5}$	$-p_{5,1}$
1	$0.37\,\frac{w_{1,1}}{h}$	$9.26\,\frac{w_{1,3}}{h}$	$9.26\,\frac{w_{3,1}}{h}$	$30.0\,\frac{w_{3,3}}{h}$	$62.5\,\frac{w_{1,5}}{h}$	$62.5\,\frac{w_{5,1}}{h}$
$\frac{\bar{p}_x a^2}{\pi^2 E h^2}$	$-\frac{w_{1,1}}{h}$	$-\frac{w_{1,3}}{h}$	$-9\,\frac{w_{3,1}}{h}$	$-9\,\frac{w_{3,3}}{h}$	$-\frac{w_{1,5}}{h}$	$-25\,\frac{w_{5,1}}{h}$
$\frac{p_y a^2}{\pi^2 E h^2}$	$-\frac{w_{1,1}}{h}$	$-9\,\frac{w_{1,3}}{h}$	$-\frac{w_{3,1}}{h}$	$-9\,\frac{w_{3,3}}{h}$	$-25\,\frac{w_{1,5}}{h}$	$-\frac{w_{5,1}}{h}$
$\left(\frac{w_{1,1}}{h}\right)^3$	0.125	-0.0625	-0.0625	0	0	0
$\left(\frac{w_{1,1}}{h}\right)^2 \frac{w_{1,3}}{h}$	-.1875	1.065	.250	-.585	-.210	0
$\left(\frac{w_{1,1}}{h}\right)^2 \frac{w_{3,1}}{h}$	-.1875	.250	1.065	-.585	0	-.210
$\left(\frac{w_{1,1}}{h}\right)^2 \frac{w_{3,3}}{h}$	0	-.585	-.585	.405	.2025	.2025
$\frac{w_{1,1}}{h}\left(\frac{w_{1,3}}{h}\right)^2$	1.065	0	-1.625	0	1.1875	0
$\frac{w_{1,1}}{h}\left(\frac{w_{3,1}}{h}\right)^2$	1.065	-1.625	0	0	0	1.1875
$\frac{w_{1,1}}{h}\,\frac{w_{1,3}}{h}\,\frac{w_{3,1}}{h}$	.500	-3.25	-3.25	5.625	1.685	1.685
$\frac{w_{1,1}}{h}\left(\frac{w_{3,3}}{h}\right)^2$	.405	0	0	0	2.385	2.385
$\frac{w_{1,1}}{h}\,\frac{w_{1,3}}{h}\,\frac{w_{3,3}}{h}$	-1.17	0	5.625	0	-2.34	-4.68
$\frac{w_{1,1}}{h}\,\frac{w_{3,1}}{h}\,\frac{w_{3,3}}{h}$	-1.17	5.625	0	0	-4.68	-2.34
$\left(\frac{w_{1,3}}{h}\right)^3$	0	5.125	0	-5.0625	0	0
$\left(\frac{w_{1,3}}{h}\right)^2 \frac{w_{3,1}}{h}$	-1.625	0	7.375	0	-4.00	-4.625
$\frac{w_{1,3}}{h}\left(\frac{w_{3,1}}{h}\right)^2$	-1.625	7.375	0	0	-4.625	-4.00
$\left(\frac{w_{3,1}}{h}\right)^3$	0	0	5.125	-5.0625	0	0
$\left(\frac{w_{1,3}}{h}\right)^2 \frac{w_{3,3}}{h}$	0	-15.188	0	21.652	0	0
$\left(\frac{w_{3,3}}{h}\right)^3$	0	0	0	10.125	0	0

TABLE II (Continued)

	0 =	0 =	0 =	0 =	0 =	0 =
$\left(\frac{w_{3,1}}{h}\right)^2 \frac{w_{3,3}}{h}$	0	0	-15.188	21.652	0	0
$\frac{w_{1,3}}{h}\left(\frac{w_{3,3}}{h}\right)^2$	0	21.652	0	0	0	0
$\frac{w_{3,1}}{h}\left(\frac{w_{3,3}}{h}\right)^2$	0	0	21.652	0	0	0
$\frac{w_{1,3}}{h}\frac{w_{3,1}}{h}\frac{w_{3,3}}{h}$	5.625	0	0	0	16.790	16.790
$\left(\frac{w_{1,1}}{h}\right)^2 \frac{w_{1,5}}{h}$	0	-.210	0	.2025	2.025	0
$\left(\frac{w_{1,1}}{h}\right)^2 \frac{w_{5,1}}{h}$	0	0	-.210	.2025	0	2.025
$\frac{w_{1,1}}{h}\frac{w_{1,3}}{h}\frac{w_{1,5}}{h}$	-.420	2.375	1.685	-2.34	0	0
$\frac{w_{1,1}}{h}\frac{w_{1,3}}{h}\frac{w_{5,1}}{h}$	0	0	1.685	-4.68	0	-5.65
$\frac{w_{1,1}}{h}\frac{w_{3,1}}{h}\frac{w_{1,5}}{h}$	0	1.685	0	-4.68	-5,65	0
$\frac{w_{1,1}}{h}\frac{w_{3,1}}{h}\frac{w_{5,1}}{h}$	-.420	1.685	2.375	-2.34	0	0
$\frac{w_{1,1}}{h}\frac{w_{3,3}}{h}\frac{w_{1,5}}{h}$	.405	-2.34	-4.68	4.77	0	3.645
$\frac{w_{1,1}}{h}\frac{w_{3,3}}{h}\frac{w_{5,1}}{h}$	.405	-4.68	-2.34	4.77	3.645	0
$\frac{w_{1,1}}{h}\left(\frac{w_{1,5}}{h}\right)^2$	2.025	0	-2.825	0	0	0
$\frac{w_{1,1}}{h}\left(\frac{w_{5,1}}{h}\right)^2$	2.025	-2.825	0	0	0	0
$\frac{w_{1,1}}{h}\frac{w_{1,5}}{h}\frac{w_{5,1}}{h}$	0	0	0	3.645	0	0
$\left(\frac{w_{1,3}}{h}\right)^2 \frac{w_{1,5}}{h}$	1,1875	0	-4.00	0	18.313	0
$\left(\frac{w_{1,3}}{h}\right)^2 \frac{w_{5,1}}{h}$	0	0	-4.625	0	0	13,451
$\left(\frac{w_{3,1}}{h}\right)^2 \frac{w_{1,5}}{h}$	0	-4.625	0	0	13.451	0
$\left(\frac{w_{3,1}}{h}\right)^2 \frac{w_{5,1}}{h}$	1.1875	-4.00	0	0	0	18.313
$\frac{w_{1,3}}{h}\frac{w_{3,1}}{h}\frac{w_{1,5}}{h}$	1.685	-8.00	-9.25	16,790	0	10.25

TABLE II (Continued)

	0 =	0 =	0 =	0 =	0 =	0 =
$\frac{w_{1,3}}{h}\frac{w_{3,1}}{h}\frac{w_{5,1}}{h}$	1.685	-9.25	-8.00	16.790	10.25	0
$\frac{w_{1,3}}{h}\frac{w_{3,3}}{h}\frac{w_{1,5}}{h}$	-2.34	0	16.790	0	-46.16	-19.485
$\frac{w_{1,3}}{h}\frac{w_{3,3}}{h}\frac{w_{5,1}}{h}$	-4.68	0	16.790	0	-19.485	0
$\frac{w_{3,1}}{h}\frac{w_{3,3}}{h}\frac{w_{1,5}}{h}$	-4.68	16.790	0	0	0	-19.485
$\frac{w_{3,1}}{h}\frac{w_{3,3}}{h}\frac{w_{5,1}}{h}$	-2.34	16.790	0	0	-19.485	-46.16
$\left(\frac{w_{3,3}}{h}\right)^2\frac{w_{1,5}}{h}$	2.385	0	0	0	38.272	20.25
$\left(\frac{w_{3,3}}{h}\right)^2\frac{w_{5,1}}{h}$	2.385	0	0	0	20.25	38.272
$\frac{w_{1,3}}{h}\left(\frac{w_{1,5}}{h}\right)^2$	0	18.313	0	-23.08	0	0
$\frac{w_{1,3}}{h}\left(\frac{w_{5,1}}{h}\right)^2$	-2.825	13.451	0	0	-13.625	0
$\frac{w_{3,1}}{h}\left(\frac{w_{1,5}}{h}\right)^2$	-2.825	0	13.45	0	0	-13.625
$\frac{w_{3,1}}{h}\left(\frac{w_{5,1}}{h}\right)^2$	0	0	18.313	-23.08	0	0
$\frac{w_{1,3}}{h}\frac{w_{1,5}}{h}\frac{w_{5,1}}{h}$	0	0	10.25	-19.485	0	-27.25
$\frac{w_{3,1}}{h}\frac{w_{1,5}}{h}\frac{w_{5,1}}{h}$	0	10.25	0	-19.485	-27.25	0
$\frac{w_{3,3}}{h}\left(\frac{w_{1,5}}{h}\right)^2$	0	-23.08	0	38.272	0	0
$\frac{w_{3,3}}{h}\left(\frac{w_{5,1}}{h}\right)^2$	0	0	-23.08	38.272	0	0
$\frac{w_{3,3}}{h}\frac{w_{1,5}}{h}\frac{w_{5,1}}{h}$	3.645	-19.485	-19.485	40.5	0	0
$\left(\frac{w_{1,5}}{h}\right)^3$	0	0	0	0	39.125	0
$\left(\frac{w_{1,5}}{h}\right)^2\frac{w_{5,1}}{h}$	0	0	-13.625	0	0	45.385
$\frac{w_{1,5}}{h}\left(\frac{w_{5,1}}{h}\right)^2$	0	-13.625	0	0	45.385	0
$\left(\frac{w_{5,1}}{h}\right)^3$	0	0	0	0	0	39.125

TABLE III - VALUES OF COEFFICIENTS IN DEFLECTION FUNCTION OF EQUATION (6) FOR SQUARE PLATE UNDER EDGE COMPRESSION [μ = 0.316]

$\frac{\bar{p}_x a^2}{Eh^2}$	$\frac{w_{1,1}}{h}$	$\frac{w_{1,3}}{h}$	$\frac{w_{3,1}}{h}$	$\frac{w_{3,3}}{h}$	$\frac{w_{1,5}}{h}$	$\frac{w_{5,1}}{h}$	$\frac{w_{center}}{h}$
3.66	0	0	0	0	0	0	0.000
3.72	.25	.000109	.000164	.000000	.000000	.000000	.250
3.96	.50	.000848	.001308	.000012	.000001	.000001	.498
4.34	.75	.00275	.00434	.000086	.000005	.000009	.743
4.87	1.00	.00615	.01043	.000360	.000017	.000036	.984
5.51	1.25	.01127	.0203	.001063	.000044	.000104	1.220
6.30	1.50	.0181	.0350	.00257	.000092	.000241	1.450
7.22	1.75	.0267	.0561	.00541	.000166	.000484	1.673
8.24	2.00	.0370	.0846	.01040	.000284	.000879	1.889
9.38	2.25	.0493	.1208	.0184	.000467	.00143	2.101
10.61	2.50	.0635	.1670	.0307	.00082	.00215	2.303
11.99	2.75	.0790	.226	.0488	.00145	.00313	2.498
13.48	3.00	.095	.299	.0743	.00273	.0041	2.687
14.97	3.25	.112	.384	.107	.00483	.00510	2.871
16.79	3.50	.129	.493	.151	.00893	.00565	3.044
18.77	3.75	.138	.626	.206	.0161	.00392	3.212
21.45	4.00	.124	.808	.287	.0303	-.0021	3.376

TABLE IV

VALUES OF COEFFICIENTS IN STRESS FUNCTION OF EQUATION (8) FOR SQUARE PLATE UNDER EDGE COMPRESSION

[$\mu = 0.316$]

$\frac{\bar{p}_x a^2}{Eh^2}$	3.66	3.72	3.96	4.34	4.87	5.51	6.30	7.22	8.24	9.38	10.61	11.99	13.48	14.97	16.79	18.77	21.45
$\frac{4\pi^2 b_{0,2}}{Eh^2}$	.00	.08	.31	.69	1.22	1.89	2.73	3.69	4.80	6.10	7.52	9.15	10.92	12.88	15.08	17.58	20.55
$\frac{4\pi^2 b_{2,0}}{Eh^2}$	.00	.08	.31	.68	1.21	1.86	2.66	3.53	4.52	5.59	6.70	7.82	8.84	9.82	10.60	11.12	11.23
$\frac{16\pi^2 b_{0,4}}{Eh^2}$	.00	.00	.00	.00	.01	.03	.07	.12	.20	.32	.50	.77	1.18	1.77	2.70	3.99	6.15
$\frac{16\pi^2 b_{4,0}}{Eh^2}$	.00	.00	.00	.01	.03	.06	.13	.24	.42	.68	1.06	1.60	2.34	3.30	4.64	6.39	8.79
$\frac{4\pi^2 b_{2,2}}{Eh^2}$	.00	.00	.00	.01	.04	.09	.19	.34	.57	.89	1.32	1.90	2.64	3.56	4.74	6.19	8.07
$\frac{36\pi^2 b_{0,6}}{Eh^2}$	.00	.00	.00	.00	.00	.00	.00	.00	.00	.00	.01	.05	.10	.17	.35	.64	1.24
$\frac{36\pi^2 b_{6,0}}{Eh^2}$	.00	.00	.00	.00	.00	.00	.00	.00	.01	.02	.06	.11	.20	.35	.59	.98	1.70
$\frac{16\pi^2 b_{2,4}}{Eh^2}$	.00	.00	.00	.00	.00	.00	.01	.03	.08	.17	.32	.58	.99	1.56	2.38	3.43	4.86
$\frac{16\pi^2 b_{4,2}}{Eh^2}$	.00	.00	.00	.00	.00	.00	.00	.01	.04	.11	.23	.44	.76	1.24	1.92	2.81	4.10
$\frac{36\pi^2 b_{2,6}}{Eh^2}$	.00	.00	.00	.00	.00	.00	.00	.00	.00	.01	.02	.03	.06	.11	.19	.32	.54
$\frac{36\pi^2 b_{6,2}}{Eh^2}$	.00	.00	.00	.00	.00	.00	.00	.00	.01	.02	.04	.08	.17	.32	.59	1.03	1.87
$\frac{16\pi^2 b_{4,4}}{Eh^2}$	.00	.00	.00	.00	.00	.00	.00	.00	.00	-.01	-.02	-.04	-.06	-.08	-.11	-.11	-.02
$\frac{64\pi^2 b_{0,8}}{Eh^2}$	.00	.00	.00	.00	.00	.00	.00	.00	.00	.00	.00	.00	.00	.00	.00	.01	.01
$\frac{64\pi^2 b_{8,0}}{Eh^2}$	.00	.00	.00	.00	.00	.00	.00	.00	.00	.00	.00	.00	.00	.00	.01	.01	.00
$\frac{36\pi^2 b_{4,6}}{Eh^2}$	.00	.00	.00	.00	.00	.00	.00	.00	.00	.00	.00	.00	-.01	-.02	-.05	-.10	-.20
$\frac{36\pi^2 b_{6,4}}{Eh^2}$	.00	.00	.00	.00	.00	.00	.00	.00	.00	.00	-.01	-.01	-.03	-.05	-.09	-.15	-.28
$\frac{64\pi^2 b_{8,2}}{Eh^2}$	.00	.00	.00	.00	.00	.00	.00	.00	.00	.00	.00	.00	.00	.01	.01	.01	-.01
$\frac{64\pi^2 b_{2,8}}{Eh^2}$	.00	.00	.00	.00	.00	.00	.00	.00	.00	.00	.00	.00	.00	.01	.01	.04	.10
Others	.00	.00	.00	.00	.00	.00	.00	.00	.00	.00	.00	.00	.00	.00	.00	.00	.00

TABLE V - CONVERGENCE OF SOLUTION FOR EFFECTIVE WIDTH OF A SQUARE PLATE UNDER EDGE COMPRESSION AS THE NUMBER OF EQUATIONS OF THE FAMILY OF EQUATION (9) USED IN THE SOLUTION IS INCREASED

[μ = 0.316]

Average edge strain / Critical strain	Effective width / Initial width			
	Using one from equation (9)	Using three from equation (9)	Using four from equation (9)	Using six from equation (9)
1.00	1.000	1.000	1.000	1.000
1.67	.797	.797	.797	.797
7.01	.570	.535	.525	.525
13.50	.538	.480	.434	.434

TABLE VI - VALUES OF COEFFICIENTS IN DEFLECTION FUNCTION, EQUATION (6), FOR SQUARE PLATE UNDER UNIFORM NORMAL PRESSURE p

[Edge compression = 0; μ = 0.316]

$\frac{pa^4}{Eh^4}$	$\frac{w_{1,1}}{h}$	$\frac{w_{1,3}}{h}$, $\frac{w_{3,1}}{h}$	$\frac{w_{3,3}}{h}$	$\frac{w_{1,5}}{h}$, $\frac{w_{5,1}}{h}$	$\frac{w_{center}}{h}$
0	0	0	0	0	0
12.1	.500	.00781	.000814	.000644	.486
29.4	1.000	.02165	.00254	.00156	.962
56.9	1.500	.0447	.00666	.00303	1.424
99.4	2.000	.0776	.0152	.00524	1.870
161	2.500	.1195	.0299	.00831	2.307
247	3.000	.167	.0516	.0123	2.742
358	3.500	.221	.0813	.0175	3.174
497	4.000	.282	.116	.0236	3.600

TABLE VII - VALUES OF COEFFICIENTS IN STRESS FUNCTION, EQUATION (8), FOR SQUARE PLATE UNDER UNIFORM NORMAL PRESSURE p

[Edge compression = 0; μ = 0.316]

$\frac{pa^4}{Eh^4}$	$\frac{4\pi^2 b_{0,2}}{Eh^2}$ $\frac{4\pi^2 b_{2,0}}{Eh^2}$	$\frac{16\pi^2 b_{0,4}}{Eh^2}$ $\frac{16\pi^2 b_{4,0}}{Eh^2}$	$\frac{4\pi^2 b_{2,2}}{Eh^2}$	$\frac{36\pi^2 b_{6,0}}{Eh^2}$ $\frac{36\pi^2 b_{0,6}}{Eh^2}$	$\frac{16\pi^2 b_{2,4}}{Eh^2}$ $\frac{16\pi^2 b_{4,2}}{Eh^2}$	$\frac{36\pi^2 b_{2,6}}{Eh^2}$ $\frac{36\pi^2 b_{6,2}}{Eh^2}$	$\frac{16\pi^2 b_{4,4}}{Eh^2}$	$\frac{36\pi^2 b_{4,6}}{Eh^2}$ $\frac{36\pi^2 b_{6,4}}{Eh^2}$	Others
0	0.00	0.00	0.00	0.00	0.00	0.00	0.00	0.00	0.00
12.1	.30	.01	.02	.00	.00	.00	.00	.00	.00
29.4	1.19	.05	.10	.00	.01	.00	.00	.00	.00
56.9	2.63	.16	.31	.01	.05	.00	.00	.00	.00
99.4	4.59	.39	.72	.04	.13	.01	.00	.00	.00
161.	7.06	.77	1.35	.08	.35	.03	-.01	-.01	.00
247.	10.01	1.34	2.21	.16	.74	.06	-.03	-.02	.00
358.	13.37	2.16	3.35	.28	1.39	.14	-.05	-.04	.00
497.	17.11	3.27	4.80	.49	2.30	.27	-.08	-.07	.00

TABLE VIII - CONVERGENCE OF SOLUTION FOR pa^4/Eh^4 AND w_{center}/h OF A SQUARE PLATE UNDER UNIFORM NORMAL PRESSURE AS THE NUMBER OF EQUATIONS OF THE FAMILY OF EQUATION (9) USED IN THE SOLUTION IS INCREASED

[Edge compression, 0; μ = 0.316]

(a) Pressure

$\frac{w_{1,1}}{h}$	pa^4/Eh^4		
	Using one equation	Using three equations	Using six equations
0	0.00	0.00	0.00
1	29.9	29.4	29.4
3	271	249	247
4	572	516	501

(b) Center deflection

$\frac{w_{1,1}}{h}$	w_{center}/h		
	Using one equation	Using three equations	Using six equations
0	0.000	0.000	0.000
1	1.000	.957	.962
3	3.000	2.666	2.743
4	4.000	3.436	3.600

TABLE IX - VALUES OF COEFFICIENTS IN DEFLECTION FUNCTION, EQUATION (6), FOR SQUARE PLATE UNDER UNIFORM NORMAL PRESSURE p

[Edge displacement = 0; μ = 0.316]

$\frac{pa^4}{Eh^4}$	$\frac{w_{1,1}}{h}$	$\frac{w_{1,3}}{h}$ $\frac{w_{3,1}}{h}$	$\frac{w_{3,3}}{h}$	$\frac{w_{1,5}}{h}$ $\frac{w_{5,1}}{h}$	$\frac{w_{center}}{h}$
0	0	0	0	0	0
14.78	.500	.0089	.00095	.00077	.485
51.4	1.000	.0283	.00366	.00252	.952
132.0	1.500	.0595	.00965	.00585	1.402
278.5	2.000	.0978	.0193	.0109	1.846

TABLE X - VALUES OF COEFFICIENTS IN STRESS FUNCTION, EQUATION (8), FOR SQUARE PLATE UNDER UNIFORM NORMAL PRESSURE p

[Edge displacement, 0; $\mu = 0.316$]

$\frac{pa^4}{Eh^4}$	$-\frac{\bar{p}_x a^2}{Eh^2}$ $-\frac{\bar{p}_y a^2}{Eh^2}$	$\frac{4\pi^2 b_{2,0}}{Eh^2}$ $\frac{4\pi^2 b_{0,2}}{Eh^2}$	$\frac{4\pi^2 b_{2,2}}{Eh^2}$	$\frac{16\pi^2 b_{4,0}}{Eh^2}$ $\frac{16\pi^2 b_{0,4}}{Eh^2}$	$\frac{36\pi^2 b_{6,0}}{Eh^2}$ $\frac{36\pi^2 b_{0,6}}{Eh^2}$	$\frac{16\pi^2 b_{4,2}}{Eh^2}$ $\frac{16\pi^2 b_{2,4}}{Eh^2}$	$\frac{16\pi^2 b_{4,4}}{Eh^2}$	$\frac{36\pi^2 b_{6,2}}{Eh^2}$ $\frac{36\pi^2 b_{2,6}}{Eh^2}$	Others
0	0	0	0	0	0	0	0	0	0
14.78	.451	.299	.021	.010	.001	.002	.000	.000	.000
51.4	1.816	1.174	.132	.066	.006	.019	-.002	-.002	.000
132.0	4.12	2.59	.41	.21	.02	.07	-.01	-.01	.00
278.5	7.38	4.53	.89	.47	.06	.23	.00	.02	.00

TABLE XI - CONVERGENCE OF SOLUTIONS FOR pa^4/Eh^4 AND w_{center}/h OF SQUARE PLATE UNDER UNIFORM NORMAL PRESSURE AS THE NUMBER OF EQUATIONS OF THE FAMILY OF EQUATION (9) USED IN THE SOLUTION IS INCREASED

[Edge displacement = 0; μ = 0.316]

(a) Pressure

$\frac{w_{1,1}}{h}$	pa^4/Eh^4		
	Using one equation	Using three equations	Using six equations
0.000	0.00	0.00	0.00
.500	14.83	14.78	14.78
1.000	51.8	51.4	51.4
1.500	133.0	132.0	132.0
2.000	280.2	278.5	278.5

(b) Center deflection

$\frac{w_{1,1}}{h}$	w_{center}/h		
	Using one equation	Using three equations	Using six equations
0.000	0.000	0.000	0.000
.500	.500	.482	.485
1.000	1.000	.944	.952
1.500	1.500	1.382	1.402
2.000	2.000	1.807	1.846

TABLE XII - COMBINED UNIFORM NORMAL PRESSURE AND EDGE COMPRESSION

IN ONE DIRECTION FOR A SQUARE PLATE

[μ = 0.316]

$\frac{w_{1,1}}{h}$	$\frac{\bar{p}_x a^2}{Eh^2}$	$\frac{w_{1,3}}{h}$	$\frac{w_{3,1}}{h}$	$\frac{w_{3,3}}{h}$	$\frac{w_{1,5}}{h}$	$\frac{w_{5,1}}{h}$	$\frac{\text{Effective width}}{\text{Initial width}}$	$\frac{\text{Average edge strain}}{(\text{Critical strain})_{p=0}}$
(a) $\frac{pa^4}{Eh^4} = 2.25$								
0.10	0.00	0.00134	0.00134	0.000137	0.000119	0.000119	0.000	0.0034
.20	1.87	.00142	.00171	.000148	.000120	.000129	.973	.526
.40	2.93	.00178	.00241	.000164	.000120	.000135	.935	.855
.60	3.48	.00276	.00400	.000250	.000120	.000142	.887	1.07
.80	3.98	.00454	.00697	.000309	.000126	.000155	.832	1.30
(b) $\frac{pa^4}{Eh^4} = 29.5$								
1.00	0.00	0.0216	0.0216	0.00252	0.00155	0.00155	0.000	0.34
1.30	1.93	.0272	.0321	.0037	.00159	.00173	.479	1.10
1.50	3.04	.0325	.0413	.0050	.00162	.00186	.520	1.60
1.70	4.16	.039	.055	.0068	.002	.002	.536	2.12
2.00	5.78	.050	.081	.011	.002	.002	.535	2.96

TABLE XIII - CONVERGENCE OF SOLUTION FOR EFFECTIVE WIDTH OF A SQUARE PLATE UNDER COMBINED UNIFORM LATERAL PRESSURE AND EDGE COMPRESSION AS THE NUMBER OF EQUATIONS OF THE FAMILY OF EQUATION (9) USED IN THE SOLUTION IS INCREASED

[μ = 0.316]

(a) $\frac{\text{Effective width}}{\text{Initial width}}$ when $\frac{pa^4}{Eh^4} = 2.25$

$\frac{w_{1,1}}{h}$	Using one equation	Using three equations	Using four equations	Using six equations
.10	.000	.000	.000	.000
.20	.974	.974	.974	.974
.40	.935	.935	.935	.935
.60	.887	.887	.887	.887
.80	.832	.832	.832	.832

(b) $\frac{\text{Effective width}}{\text{Initial width}}$ when $\frac{pa^4}{Eh^4} = 29.5$

$\frac{w_{1,1}}{h}$	Using one equation	Using three equations	Using four equations	Using six equations
1.00	.053	.000	.000	.000
1.30	.493	.479	.479	.479
1.50	.536	.520	.520	.520
1.70	.551	.536	.536	.536
2.00	.556	.535	.535	.535

TABLE XIV - COMBINED UNIFORM LATERAL PRESSURE p AND EDGE COMPRESSION IN THE DIRECTION OF THE x-AXIS $\overline{p}_x bh$ FOR RECTANGULAR PLATES

[$a = 3b$; $\mu = 0.316$]

$\frac{pb^4}{Eh^4}$	$\frac{\overline{p}_x b^2}{Eh^2}$	$\frac{w_{1,1}}{h}$	$\frac{w_{3,1}}{h}$	$\frac{\text{Effective width}}{\text{Initial width}}$	$\frac{\text{Average edge strain}}{(\text{Critical strain})_{p=0}}$
0.00	3.66	0.00	0.00	1.000	1.00
.00	3.72	.00	.25	.978	1.04
.00	3.96	.00	.50	.928	1.17
.00	4.34	.00	.75	.863	1.37
.00	4.87	.00	1.00	.798	1.67
2.25	.00	.313	.0365	.000	.004
2.25	1.02	.344	.0500	.980	.276
2.25	2.47	.405	.1000	.989	.683
2.25	3.69	.443	.300	.962	1.05
4.50	.00	.583	.0797	.000	.015
4.50	.77	.620	.100	.926	.233
4.50	2.68	.739	.200	.957	.765
4.50	3.58	.800	.300	.947	1.03

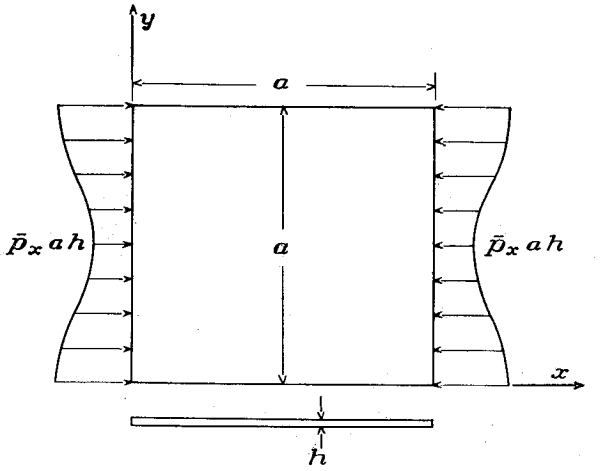

Figure 1.- Square plate loaded by edge compression in x-direction.

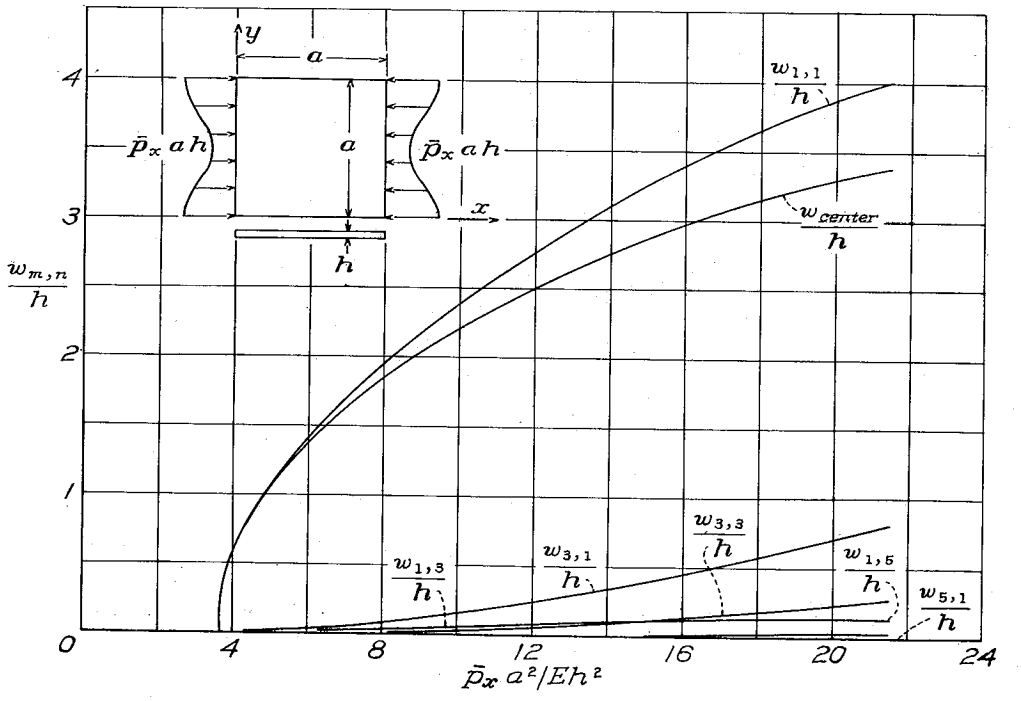

Figure 2.- Values of coefficients in table III for deflection function $w = \sum_m \sum_n w_{m,n} \sin m\pi x/a \sin n\pi y/a$ for a square plate under edge compression. Average compressive stress in x-direction = $\bar{p}_x$; $\mu = 0.316$.

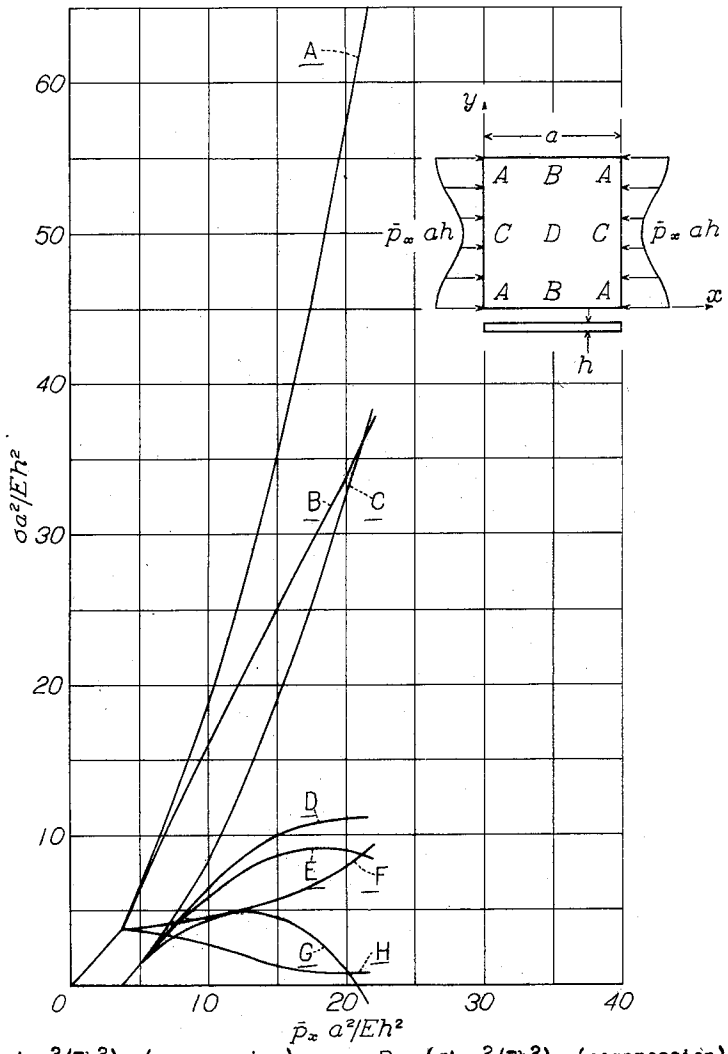

A, $(\sigma'_x a^2/Eh^2)_A$ (compression)
B, $(\sigma'_x a^2/Eh^2)_B$ (compression)
C, $(\sigma'_y a^2/Eh^2)_A$ (compression)
D, $(\sigma'_y a^2/Eh^2)_B$ (tension)
E, $(\sigma'_y a^2/Eh^2)_C$ (compression)
F, $(\sigma'_x a^2/Eh^2)_D$ (compression)
G, $(\sigma'_y a^2/Eh^2)_D$ (tension)
H, $(\sigma'_x a^2/Eh^2)_C$ (compression)

Figure 3.- Membrane stresses for a square plate under edge compression. Average compressive stress in x-direction = $\bar{p}_x$; μ = 0.316.

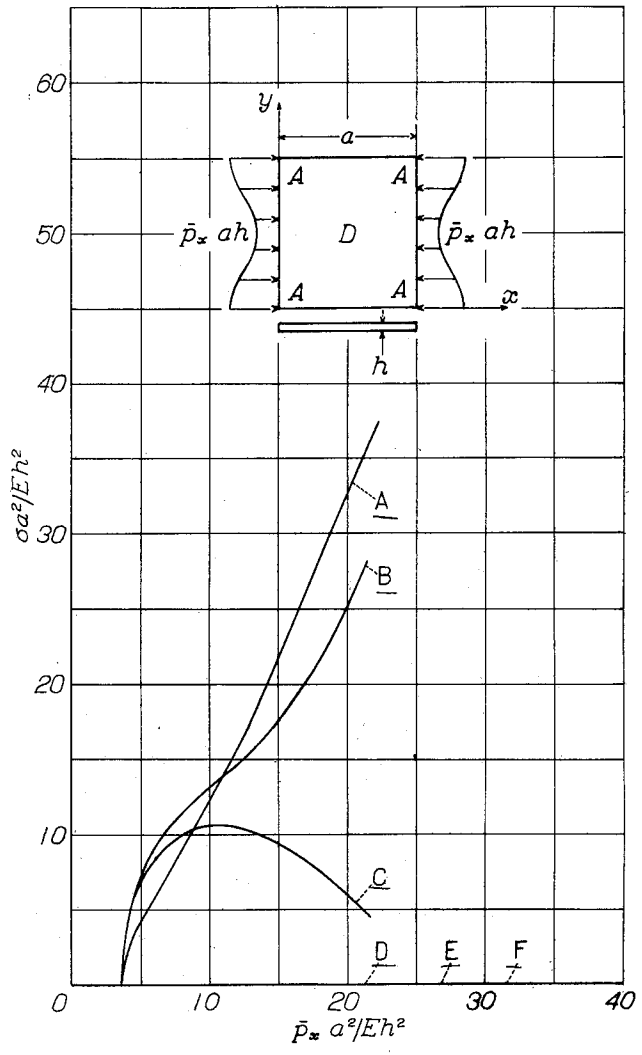

A, $(-\tau''_{xy} a^2/Eh^2)_A$
B, $(\sigma''_y a^2/Eh^2)_D$
C, $(\sigma''_x a^2/Eh^2)_D$
D, $(\tau''_{xy} a^2/Eh^2)_D$
E, $(\sigma''_x a^2/Eh^2)_A$
F, $(\sigma''_y a^2/Eh^2)_A$

Figure 4.- Bending stresses at the center and the corner for a square plate under edge compression. Average compressive stress in x-direction = $\bar{p}_x$; μ = 0.316.

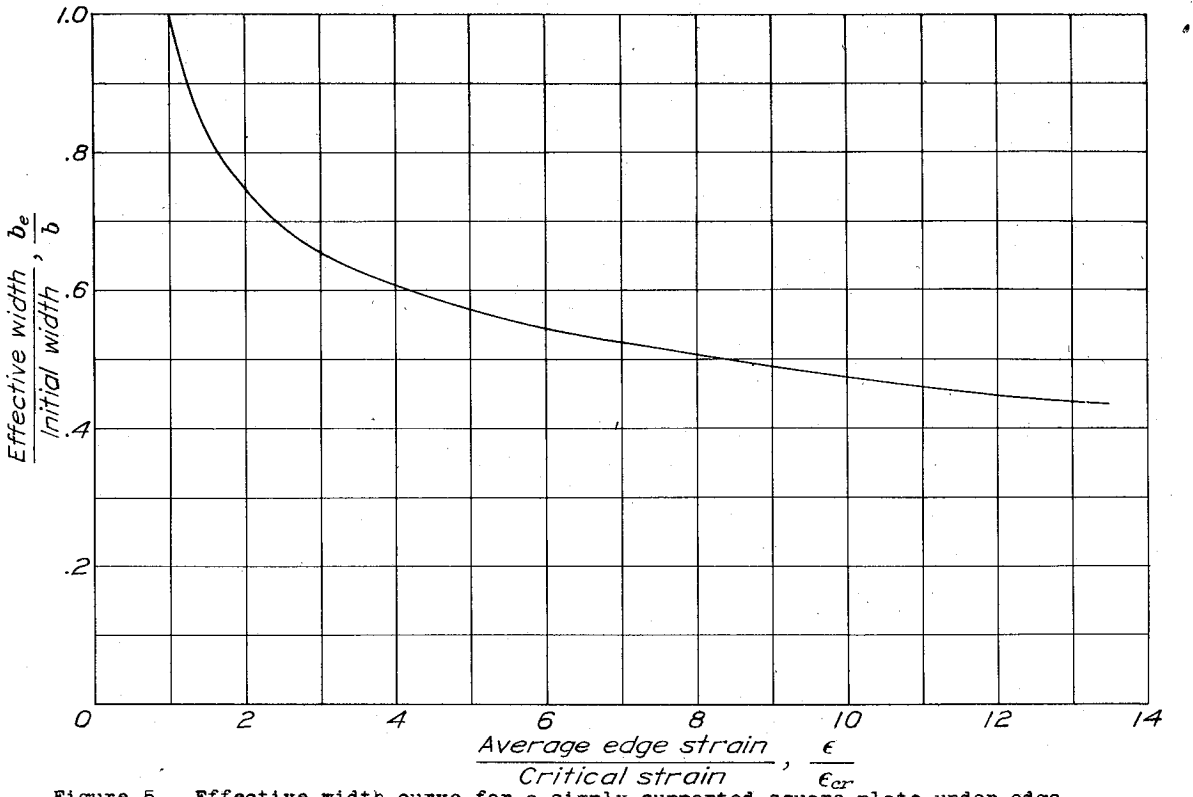

Figure 5.- Effective-width curve for a simply supported square plate under edge compression. $\mu = 0.316$.

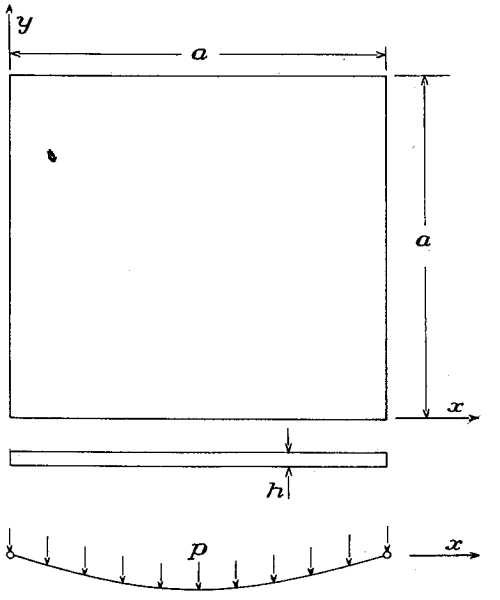

Figure 6.- Square plate loaded by a uniform normal pressure p. Edge compression = 0.

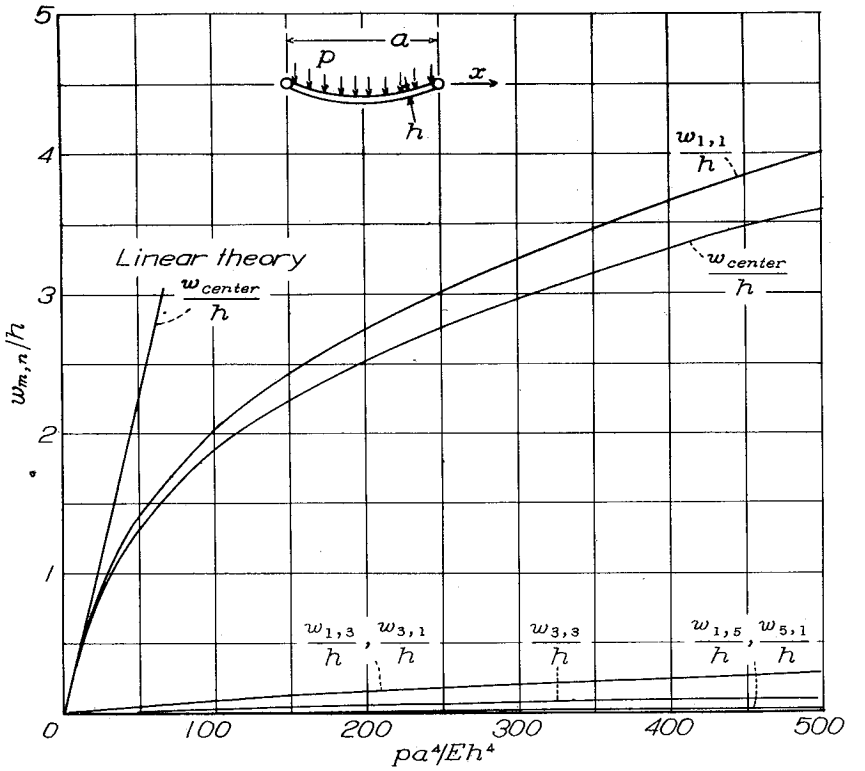

Figure 7.- Values of coefficients in table VI for deflection function $w = \sum_m \sum_n w_{m,n} \sin m\pi x/a \sin n\pi y/a$ for a square plate under uniform normal pressure p. Edge compression = 0; μ = 0.316. Linear theory from reference 9.

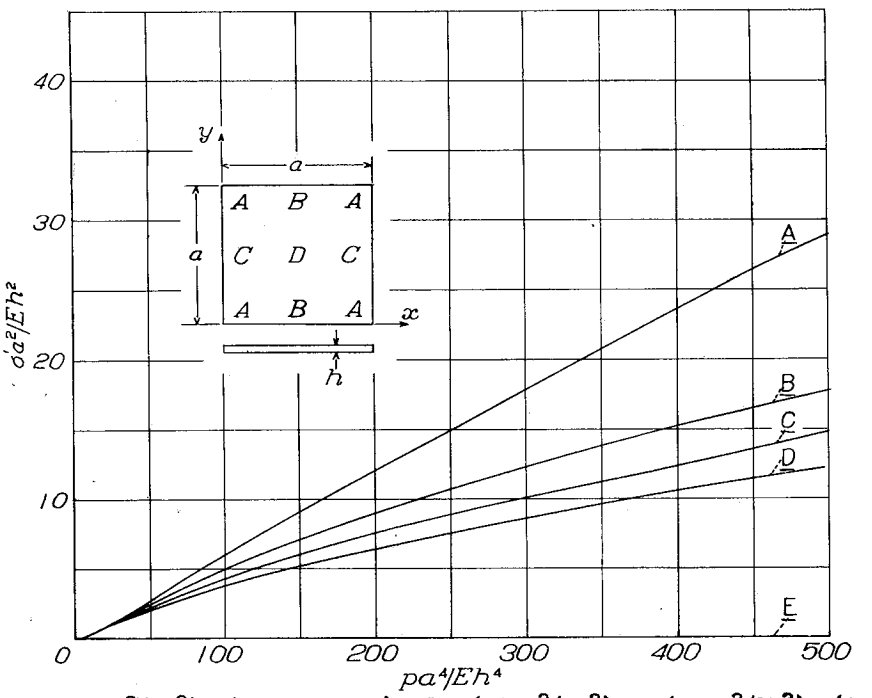

A, $(\sigma'_x a^2/Eh^2)_A$, $(\sigma'_y a^2/Eh^2)_A$ (compression) B, $(\sigma'_y a^2/Eh^2)_B$, $(\sigma'_x a^2/Eh^2)_C$ (tension)
C, $(\sigma'_x a^2/Eh^2)_B$, $(\sigma'_y a^2/Eh^2)_C$ (compression) D, $(\sigma'_x a^2/Eh^2)_D$, $(\sigma'_y a^2/Eh^2)_D$ (tension)
E, $(\tau'_{xy} a^2/Eh^2)_A$

Figure 8.- Membrane stresses for a square plate under uniform normal pressure p. Edge compression = 0; μ = 0.316.

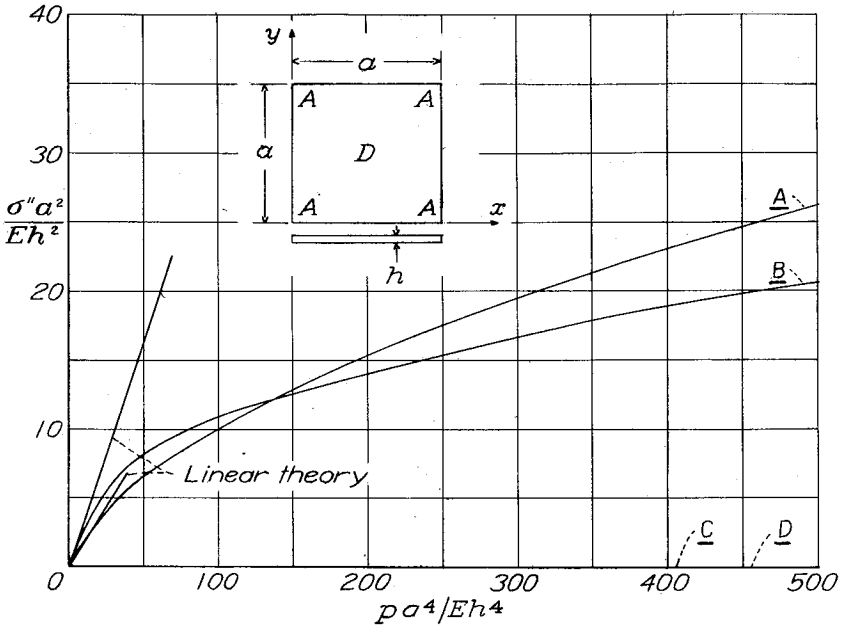

A, $(-\tau''_{xy}a^2/Eh^2)_A$; B, $(\sigma''_x a^2/Eh^2)_D$, $(\sigma''_y a^2/Eh^2)_D$; C, $(\tau''_{xy}a^2/Eh^2)_D$; D, $(\sigma''_x a^2/Eh^2)_A$, $(\sigma''_y a^2/Eh^2)_A$

Figure 9.- Extreme-fiber bending stresses at the center and the corner for a square plate under uniform normal pressure. Edge compression = 0; μ = 0.316. Linear theory from reference 9.

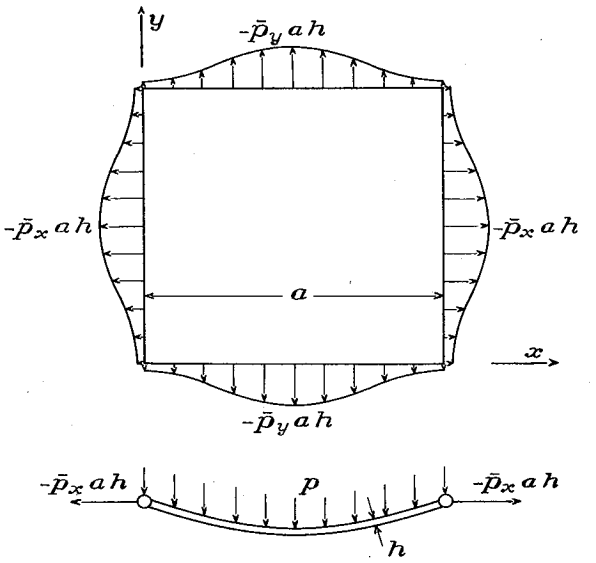

Figure 10.- Square plate loaded by a uniform normal pressure p and by edge forces $-\bar{p}_x ah$ and $-\bar{p}_y ah$ sufficient to make the edge displacement zero.

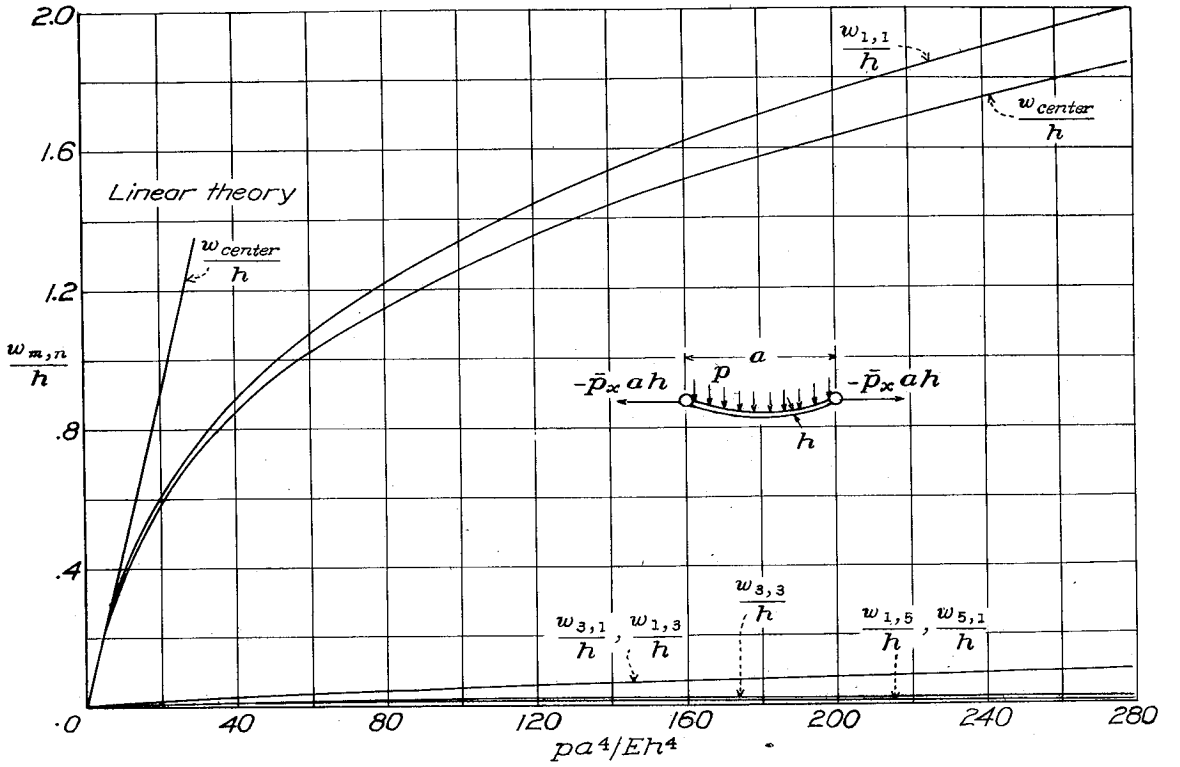

Figure 11.- Values of coefficients in table IX for deflection function $w = \sum_m \sum_n w_{m,n} \sin m\pi x/a \sin n\pi y/a$ for a square plate under uniform normal pressure p. Edge displacement = 0; μ = 0.316. Linear theory from reference 9.

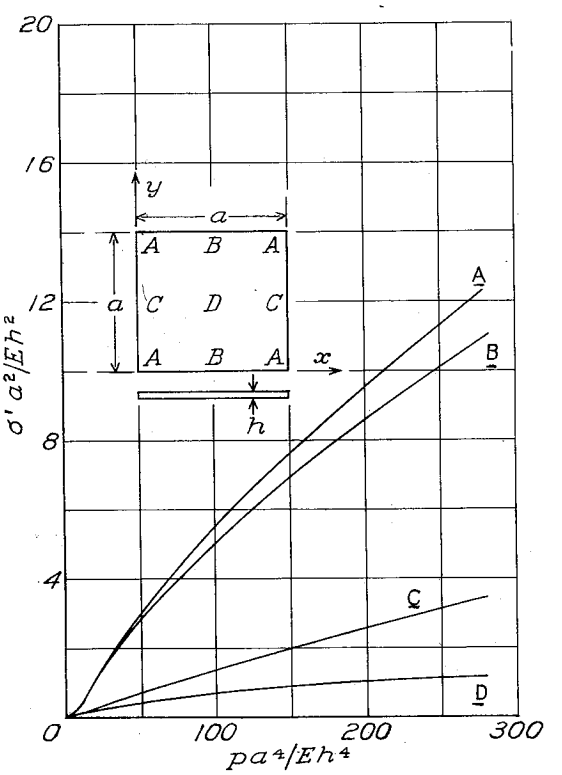

A, $(\sigma'_x a^2/Eh^2)_C$, $(\sigma'_y a^2/Eh^2)_B$ (tension)
B, $(\sigma'_x a^2/Eh^2)_D$, $(\sigma'_y a^2/Eh^2)_D$ (tension)
C, $(\sigma'_x a^2/Eh^2)_B$, $(\sigma'_y a^2/Eh^2)_C$ (tension)
D, $(\sigma'_x a^2/Eh^2)_A$, $(\sigma'_y a^2/Eh^2)_A$ (tension)

Figure 12.- Membrane stresses for a square plate under uniform normal stress p. Edge displacement = 0; μ = 0.316.

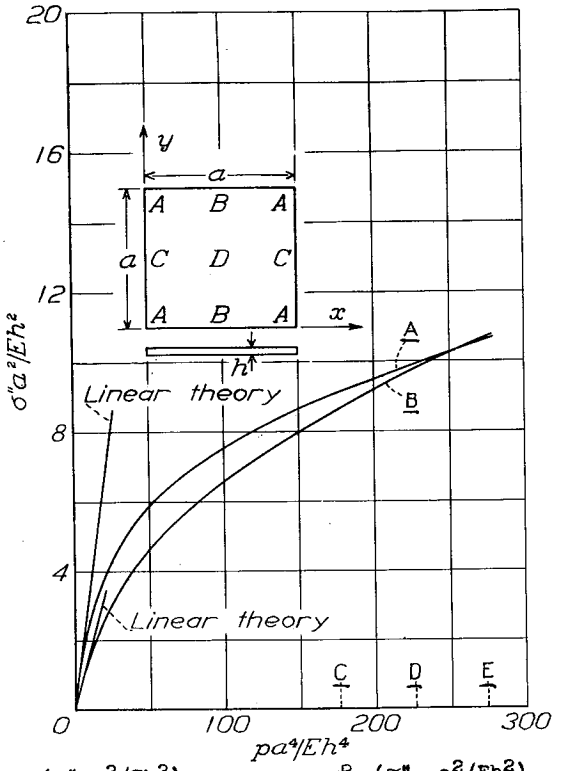

A, $(\sigma''_x a^2/Eh^2)_D$, $(\sigma''_y a^2/Eh^2)_D$ B, $(\tau''_{xy} a^2/Eh^2)_A$, C, $(\tau''_{xy} a^2/Eh^2)_B$

D, $(\sigma''_x a^2/Eh^2)_B$, $(\sigma''_y a^2/Eh^2)_B$ E, $(\sigma''_x a^2/Eh^2)_C$, $(\sigma''_y a^2/Eh^2)_C$

Figure 13.- Extreme-fiber bending stresses at the center and the corner for a square plate under uniform normal pressure. Edge displacement = 0; μ = 0.316. Linear theory from reference 9.

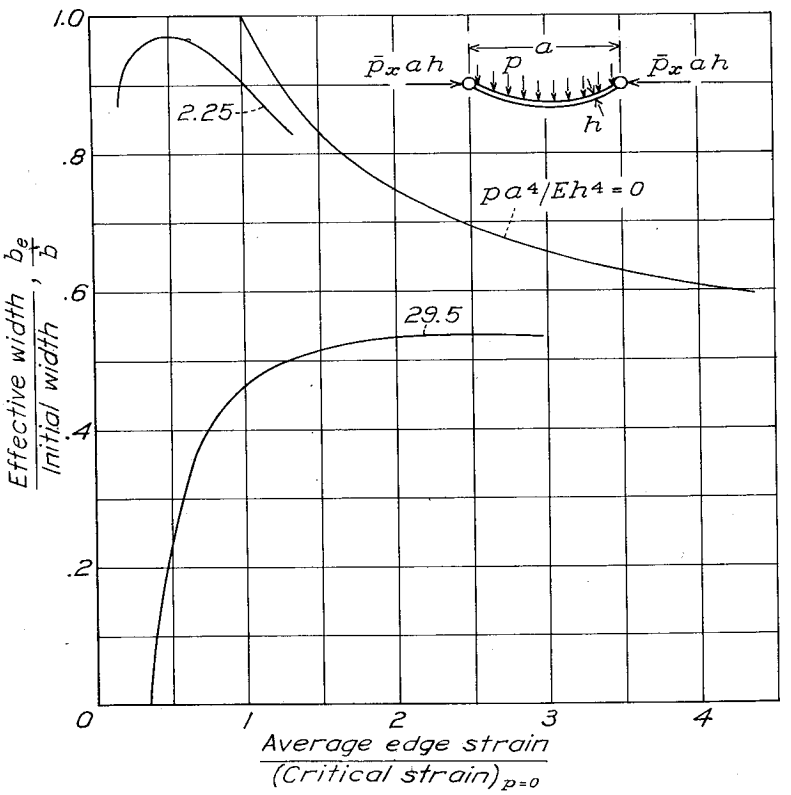

Figure 14.- Effect of normal pressure on effective width of a square plate loaded by edge compression.

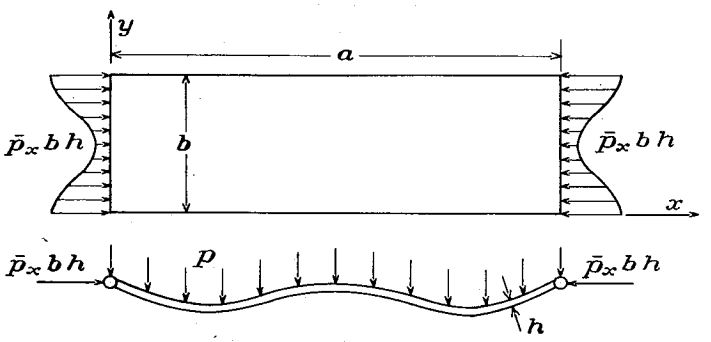

Figure 15.- Combined normal pressure and edge compression for a rectangular plate (a = 3b).

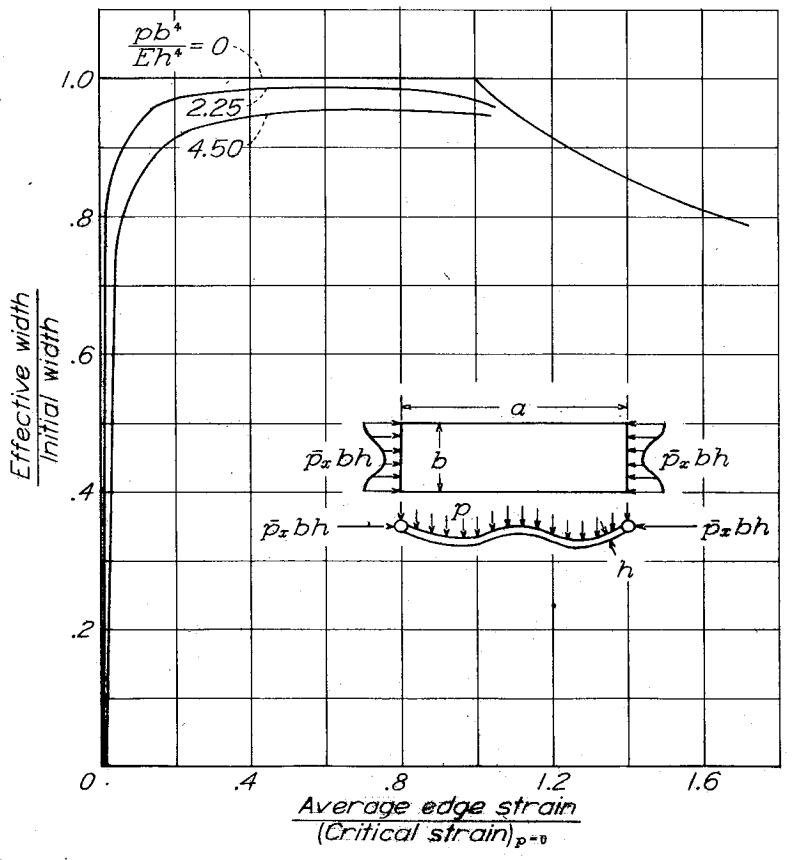

Figure 16.- Effect of normal pressure on effective width of a rectangular plate (a = 3b) loaded by edge compression on the short sides.

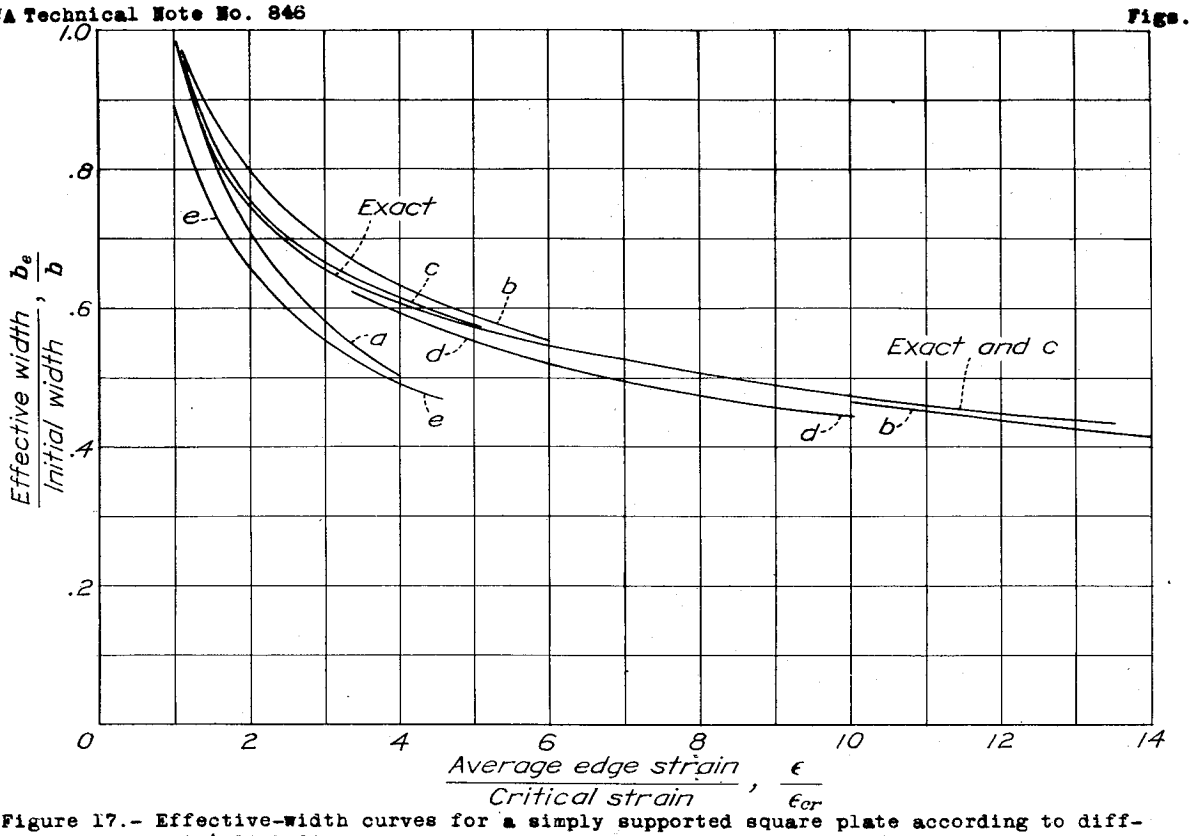

Figure 17.- Effective-width curves for a simply supported square plate according to different sources.
(a) Reference 7, $b_e/b = \sqrt{\epsilon_{cr}/\epsilon}$
(b) Approximate formula of reference 2, $b_e/b = \sqrt[3]{\epsilon_{cr}/\epsilon}$
(c) Approximate solution of reference 2
(d) Solution of reference 3
(e) Formula of reference 6, $b_e/b = 0.09 + 0.80\sqrt{\epsilon_{cr}/\epsilon}$
(Exact) Derived from present paper

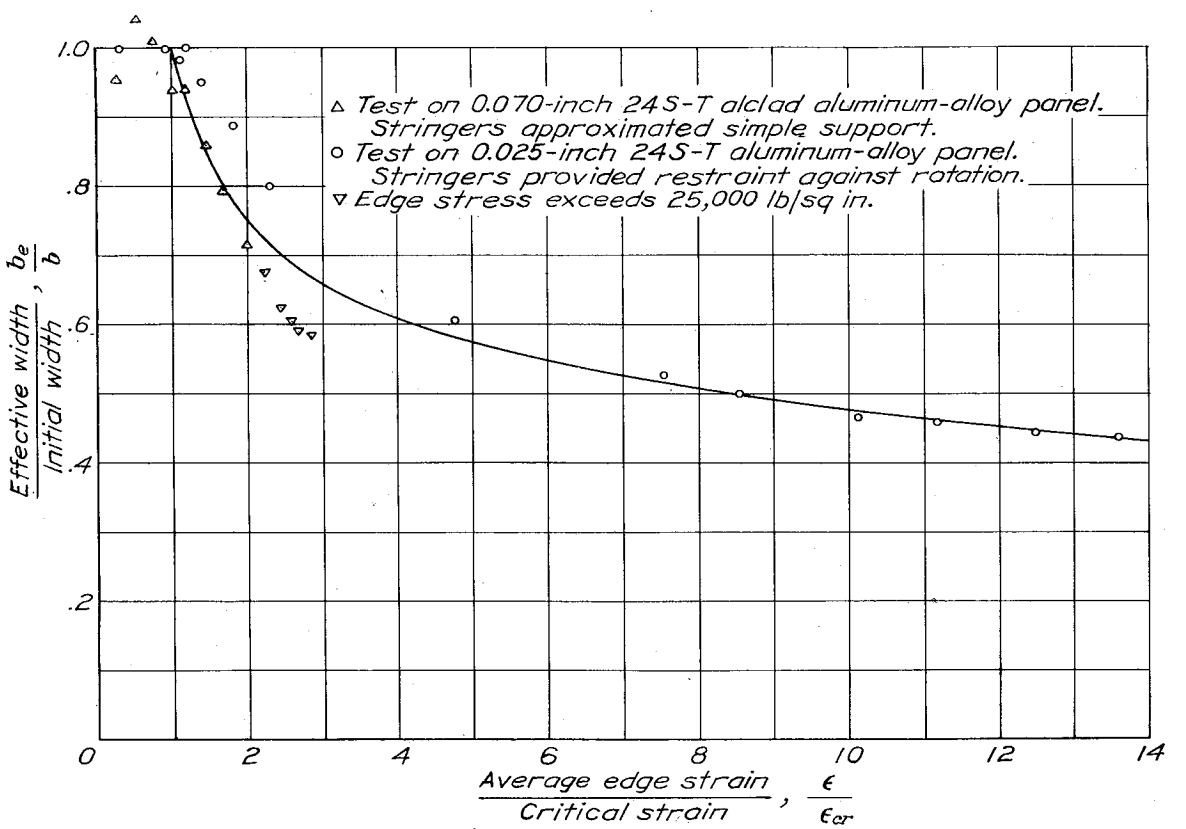

Figure 18.- Comparison of computed effective width and experimental results from reference 8. The critical strain is the computed critical strain for simply supported square plates.

[redacted]

TITLE: Bending of Rectangular Plates with large Deflections

AUTHOR(S): Levy, Samuel
ORIGINATING AGENCY: National Advisory Committee for Aeronautics, Washington, D. C.
PUBLISHED BY: (Same)

ATI- 5839
REVISION [redacted]
ORIG. AGENCY NO. [redacted] TN-846
PUBLISHING AGENCY NO.

DATE	DOC. CLASS.	COUNTRY	LANGUAGE	PAGES	ILLUSTRATIONS
May'42	[redacted]	U.S.	Eng.	45	tables, graphs

over

U

ABSTRACT: P20/11 Plates, & Bending Stress

Von Karman's fundamental equations for large deflections of plates are used for the case of a rectangular plate under combined edge compression and lateral loading. Numerical solutions for square and rectangular plates with a width span ratio of 3:1 are given. Deflections for a square plate under lateral pressure are compared with experimental and theoretical results by Kaiser. It was found that the effective widths agree closely with Marguerre's formula and with the experimentally observed values and the deflections agree with experimental results.

DISTRIBUTION: Request copies of this report only from Originating Agency

DIVISION: Stress Analysis and Structures (7)
SECTION: Structural Theory and Analysis Methods (2)

ATI SHEET NO.: R-7-2-12

SUBJECT HEADINGS: Plates - Stresses (71975)

[redacted]

Classification cancelled
or changed to _____

AUTH:

By _____
Signature and Grade

Date APR 2 9 1949

Classification cancelled per authority
of List NACA dd. 28 Sept 1945
George R. Jordan, USCO. 29 Apr 1949

RESTRICTED

TITLE: Bending of Rectangular Plates with large Deflections

AUTHOR(S): Levy, Samuel

ORIGINATING AGENCY: National Advisory Committee for Aeronautics, Washington, D. C.

PUBLISHED BY: (Same)

ATI- 5839

REVISION (None)

ORIG. AGENCY NO. TN-846

PUBLISHING AGENCY NO.

DATE	DOC. CLASS.	COUNTRY	LANGUAGE	PAGES	ILLUSTRATIONS
May'42	Restr.	U.S.	Eng.	45	tables, graphs

ABSTRACT:

Von Karman's fundamental equations for large deflections of plates are used for the case of a rectangular plate under combined edge compression and lateral loading. Numerical solutions for square and rectangular plates with a width span ratio of 3:1 are given. Deflections for a square plate under lateral pressure are compared with experimental and theoretical results by Kaiser. It was found that the effective widths agree closely with Marguerre's formula and with the experimentally observed values and the deflections agree with experimental results.

DISTRIBUTION: Request copies of this report only from Originating Agency

DIVISION: Stress Analysis and Structures (7)

SECTION: Structural Theory and Analysis Methods (2)

ATI SHEET NO.: R-7-2-12

SUBJECT HEADINGS: Plates - Stresses (71975)